Navigation Tools: Click on the "Table of Contents" below, or use the Bookmarks to the left.

INTRODUCTION

How to Use This Manual

This manual is divided into multiple sections. The first page of each section is marked with a black tab that lines up with its corresponding thumb index tab on this page and the back cover. You can quickly find the first page of each section without looking through a full table of contents. The symbols printed at the top corner of each page can also be used as a quick reference system.

Each section includes:

1. A table of contents, or an exploded view index showing:
   - Parts disassembly sequence.
   - Bolt torques and thread sizes.
   - Page references to descriptions in text.
2. Disassembly/assembly procedures and tools.
3. Inspection.
4. Testing/troubleshooting.
5. Repair.
6. Adjustments.

Safety Messages

Your safety, and the safety of others, is very important. To help you make informed decisions, we have provided safety messages, and other safety information throughout this manual. Of course, it is not practical or possible to warn you about all the hazards associated with servicing this vehicle. You must use your own good judgment.

You will find important safety information in a variety of forms including:

- **Safety Labels** — on the vehicle.
- **Safety Messages** — preceded by a safety alert symbol ⚠ and one of three signal words, DANGER, WARNING, or CAUTION. These signal words mean:

⚠DANGER	You WILL be KILLED or SERIOUSLY HURT if you don't follow instructions.
⚠WARNING	You CAN be KILLED or SERIOUSLY HURT if you don't follow instructions.
⚠CAUTION	You CAN be HURT if you don't follow instructions.

- **Instructions** — how to service this vehicle correctly and safely.

All information contained in this manual is based on the latest product information available at the time of printing. We reserve the right to make changes at anytime without notice. No part of this publication may be reproduced, or stored in a retrieval system, or transmitted, in any form by any means, electronic, mechanical, photocopying, recording, or otherwise, without the prior written permission of the publisher. This includes text, figures, and tables.

As you read this manual, you will find information that is preceded by a NOTICE symbol. The purpose of this message is to help prevent damage to your vehicle, other property, or the environment.

First Edition 11/2008
All Rights Reserved
Specifications apply to USA and Canada

HONDA MOTOR CO., LTD.
Service Publication Office

As sections with * include SRS components; special precautions are required when servicing.

marked sections are not included in this manual, see Volume 2.

General Information
Specifications
Maintenance
*Engine Electrical
Engine Mechanical
Engine Cooling
Fuel and Emissions
*Transaxle
*Steering
Suspension (Including TPMS)
Brakes (Including VSA)
*Body
*Heating, Ventilation, and Air Conditioning
*Body Electrical
*Audio, Navigation, and Telematics
*Restraints

2008-09 Accord

SUPPLEMENTAL RESTRAINT SYSTEM (SRS)

The Accord SRS includes a driver's airbag in the steering wheel hub, a passenger's airbag in the dashboard above the glove box, seat belt tensioners in the front seat belt retractors, side curtain airbags in the sides of the roof, and side airbags in the front seat-backs. Information necessary to safely service the SRS is included in this Service Manual. Items marked with an asterisk (*) on the contents page include or are located near SRS components. Servicing, disassembling, or replacing these items requires special precautions and tools, and should be done by an authorized Honda dealer.

- To avoid rendering the SRS inoperative, which could lead to personal injury or death in the event of a severe frontal or side collision, all SRS service work should be done by an authorized Honda dealer.
- Improper service procedures, including incorrect removal and installation of the SRS, could lead to personal injury caused by unintentional deployment of the airbags, side airbags, and/or side curtain airbags.
- Do not bump or impact the SRS unit, front impact sensors, side impact sensors, or rear safing sensor when the ignition switch is in ON (II), or for at least 3 minutes after the ignition switch is turned to LOCK (0); otherwise, the system may fail in a collision, or the airbags may deploy.
- SRS electrical connectors are identified by yellow color coding. Related components are located in the steering column, front console, dashboard, dashboard lower panel, in the dashboard above the glove box, in the front seats, in the roof side, and around the floor. Do not use electrical test equipment on these circuits.

Navigation Tools: Click on the “Table of Contents” below, or use the Bookmarks to the left.

General Information

Chassis and Paint Codes
- ’08 4-door Model 1-2
- ’08 2-door Model 1-3
- ’09 4-door Model 1-4
- ’09 2-door Model 1-5

Identification Number Locations 1-6

Danger/Warning/Caution Label Locations 1-7

Under-hood Emission Control Label 1-10

Lift and Support Points 1-11

Towing 1-12

Parts Marking 1-14

Chassis and Paint Codes

'08 4-door Model

Vehicle Identification Number

1HG CP2 5 3 * 8 A 000001

a b c d e f g h

a. Manufacturer, Make, and Type of Vehicle
1HG: Honda of America Mfg. Inc., U.S.A.
Honda passenger vehicle
JHM: Honda Motor Co.,Ltd.
Honda passenger vehicle

b. Line, Body, and Engine Type
CP2: Accord/K24Z2, K24Z3

c. Body Type and Transmission Type
5: 4-door Sedan/5-speed Manual
6: 4-door Sedan/5-speed Automatic

d. Vehicle Grade (Series)

USA models	Canada models
3: LX, LX PZEV	3: LX
4: LX-P, LX-P PZEV	4: LX-P
7: EX, EX PZEV	7: EX
8: EX-L, EX-L PZEV	8: EX-L

e. Check Digit

f. Model Year
8: '08

g. Factory Code
A:Marysville, Ohio Factory in U.S.A.
C:Saitama Factory in Japan

h. Serial Number
000001—: USA models
800001—: Canada models

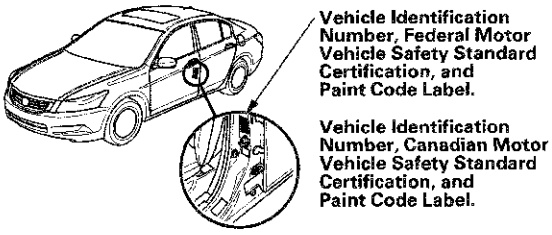

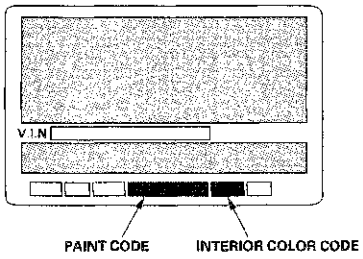

Engine Number

K24Z2 - 1000001

a b

a. Engine Type
K24Z2: 2.4 L DOHC i-VTEC Sequential Multiport Fuel-injected, 177HP engine
K24Z3: 2.4 L DOHC i-VTEC Sequential Multiport Fuel-injected, 190HP engine

b. Serial Number
1000001—: All models except PZEV, produced in Marysville
1400001—: All models except PZEV, produced in Saitama
1500001—: PZEV, produced in Marysville
1700001—: PZEV, produced in Saitama

Transmission Number

88E5 - 8000001

a b

a. Transmission Type
88E5: 5-speed Manual
M91A: 5-speed Automatic
B90A: 5-speed Automatic

b. Serial Number
8000001—: 88E5
1000001—: M91A, B90A

Paint Code

Code	Color	USA models	Canada models
B-92P	Nighthawk Black Pearl	○	○
B-536P	Royal Blue Pearl	○	○
G-530M	Mystic Green Metallic	○	○
NH-578	Taffeta White	○	○
NH-603P	White Diamond Pearl	○	○
NH-700M	Alabaster Silver Metallic	○	○
NH-737M	Polished Metal Metallic	○	○
R-530P	Basque Red Pearl	○	○
YR-574M	Bold Beige Metallic	○	○
NH-731P	Crystal Black Pearl	○	○

'08 2-door Model

Vehicle Identification Number

1HG CS1 1 3 * 8 A 000001

a b c d e f g h

a. **Manufacturer, Make, and Type of Vehicle**
   1HG: Honda of America Mfg. Inc., U.S.A.
   Honda passenger vehicle
b. **Line, Body, and Engine Type**
   CS1: Accord Coupe/K24Z3
c. **Body Type and Transmission Type**
   1: 2-door Coupe/5-speed Manual
   2: 2-door Coupe/5-speed Automatic
d. **Vehicle Grade (Series)**

USA models	Canada models
3: LX, LX PZEV	7: EX
7: EX, EX PZEV	8: EX-L
8: EX-L, EX-L PZEV	

e. **Check Digit**
f. **Model Year**
   8: '08
g. **Factory Code**
   A:Marysville, Ohio Factory in U.S.A.
h. **Serial Number**
   000001—: USA models
   800001—: Canada models

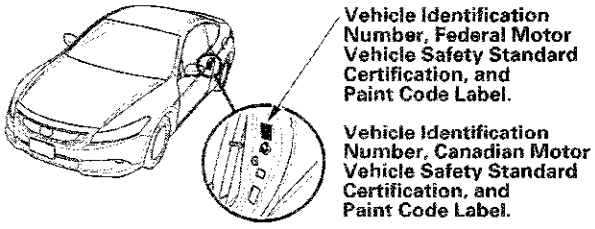

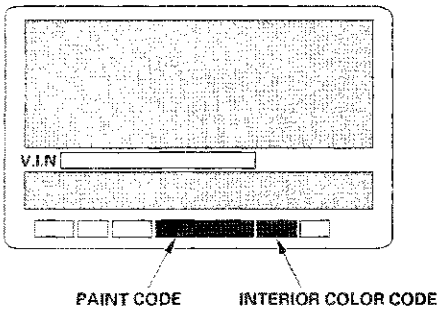

Engine Number

K24Z3 - 1400001

a b

a. **Engine Type**
   K24A3: 2.4 L DOHC i-VTEC Sequential Multiport Fuel-injected, 190HP engine
b. **Serial Number**
   1000001—: All models except PZEV
   1500001—: PZEV

Transmission Number

88E5 - 8000001

a b

a. **Transmission Type**
   88E5: 5-speed Manual
   B90A: 5-speed Automatic
b. **Serial Number**
   8000001—: 88E5
   1000001—: B90A

Paint Code

Code	Color	USA models	Canada models
B-92P	Nighthawk Black Pearl	○	○
G-551P	Belize Blue Pearl	○	○
NH-578	Taffeta White	○	○
NH-700M	Alabaster Silver Metallic	○	○
NH-737M	Polished Metal Metallic	○	○
R-94	San Marino Red	○	○

Chassis and Paint Codes (cont'd)

'09 4-door Model

Vehicle Identification Number

1HG CP2 5 3 * 9 A 000001

a b c d e f g h

a. Manufacturer, Make, and Type of Vehicle
1HG: Honda of America Mfg. Inc., U.S.A.
Honda passenger vehicle
JHM: Honda Motor Co.,Ltd.
Honda passenger vehicle

b. Line, Body, and Engine Type
CP2: Accord/K24Z2, K24Z3

c. Body Type and Transmission Type
5: 4-door Sedan/5-speed Manual
6: 4-door Sedan/5-speed Automatic

d. Vehicle Grade (Series)

USA models	Canada models
3: LX, LX PZEV	3: LX
4: LX-P, LX-P PZEV	4: LX-P
7: EX, EX PZEV	7: EX
8: EX-L, EX-L PZEV	8: EX-L

e. Check Digit

f. Model Year
9: '09

g. Factory Code
A:Marysville, Ohio Factory in U.S.A.
C:Saitama Factory in Japan

h. Serial Number
000001—: USA models
800001—: Canada models

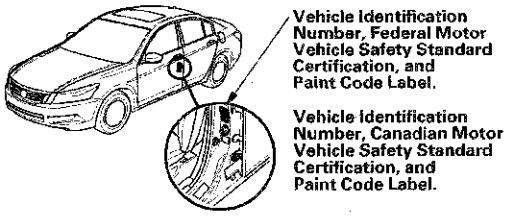

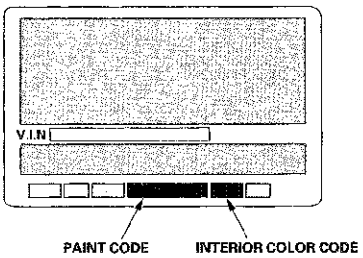

Engine Number

K24Z2 - 1000001

a b

a. Engine Type
K24Z2: 2.4 L DOHC i-VTEC Sequential Multiport Fuel-injected, 177HP engine
K24Z3: 2.4 L DOHC i-VTEC Sequential Multiport Fuel-injected, 190HP engine

b. Serial Number
1000001—: All models except PZEV, produced in Marysville
1400001—: All models except PZEV, produced in Saitama
1500001—: PZEV, produced in Marysville
1700001—: PZEV, produced in Saitama

Transmission Number

88E5 - 8000001

a b

a. Transmission Type
88E5: 5-speed Manual
M91A: 5-speed Automatic
B90A: 5-speed Automatic

b. Serial Number
8000001—: 88E5
1000001—: M91A, B90A

Paint Code

Code	Color	USA models	Canada models
NH-731P	Crystal Black Pearl	○	○
B-536P	Royal Blue Pearl	○	○
G-530M	Mystic Green Metallic	○	○
NH-578	Taffeta White	○	○
NH-603P	White Diamond Pearl	○	○
NH-700M	Alabaster Silver Metallic	○	○
NH-737M	Polished Metal Metallic	○	○
R-530P	Basque Red Pearl	○	○
YR-574M	Bold Beige Metallic	○	○

'09 2-door Model

Vehicle Identification Number

1HG CS1 1 3 * 9 A 000001

a b c d e f g h

a. **Manufacturer, Make, and Type of Vehicle**
   1HG: Honda of America Mfg. Inc., U.S.A.
   Honda passenger vehicle
b. **Line, Body, and Engine Type**
   CS1: Accord Coupe/K24Z3
c. **Body Type and Transmission Type**
   1: 2-door Coupe/5-speed Manual
   2: 2-door Coupe/5-speed Automatic
d. **Vehicle Grade (Series)**
   3: LX, LX PZEV
   7: EX, EX PZEV
   8: EX-L, EX-L PZEV
e. **Check Digit**
f. **Model Year**
   9: '09
g. **Factory Code**
   A:Marysville, Ohio Factory in U.S.A.
h. **Serial Number**
   000001—: USA models
   800001—: Canada models

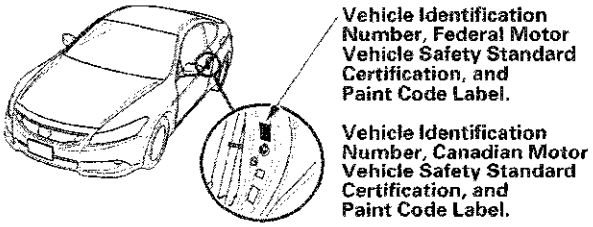

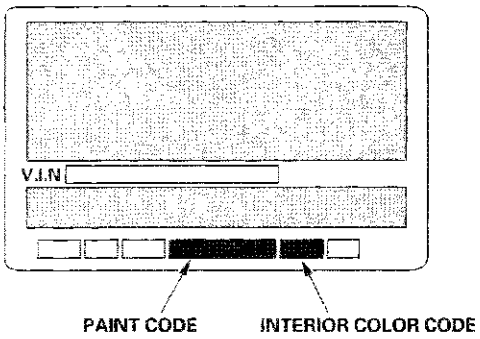

Engine Number

K24Z3 - 1400001

a b

a. **Engine Type**
   K24A3: 2.4 L DOHC i-VTEC Sequential Multiport Fuel-injected, 190HP engine
b. **Serial Number**
   1000001—: All models except PZEV
   1500001—: PZEV

Transmission Number

88E5 - 8000001

a b

a. **Transmission Type**
   88E5: 5-speed Manual
   B90A: 5-speed Automatic
b. **Serial Number**
   8000001—: 88E5
   1000001—: B90A

Paint Code

Code	Color	USA models	Canada models
B-551P	Belize Blue Pearl	○	○
NH-578	Taffeta White	○	○
NH-700M	Alabaster Silver Metallic	○	○
NH-737M	Polished Metal Metallic	○	○
R-94	San Marino Red	○	○
NH-731P	Crystal Black Pearl	○	○

Identification Number Locations

4-door:

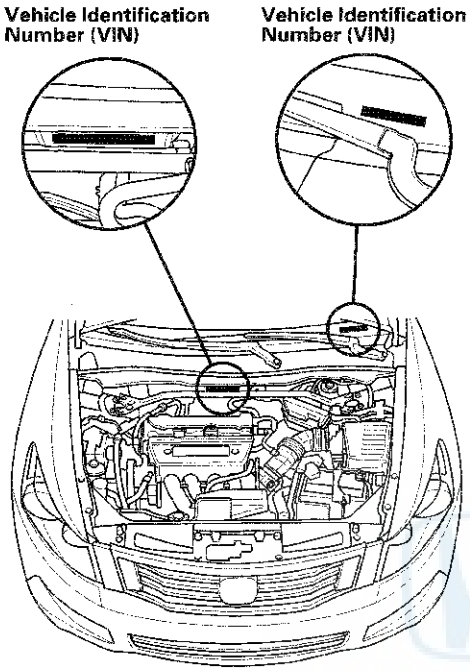

2-door:

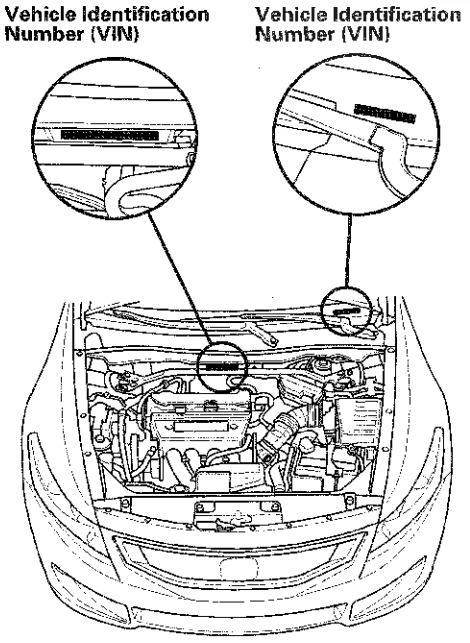

4-door:

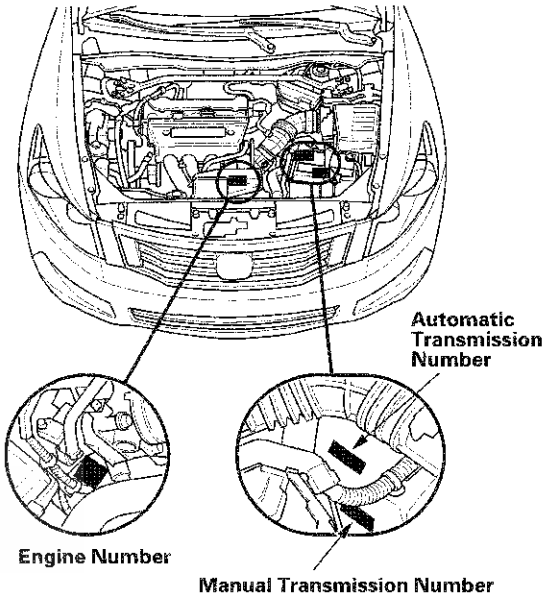

2-door:

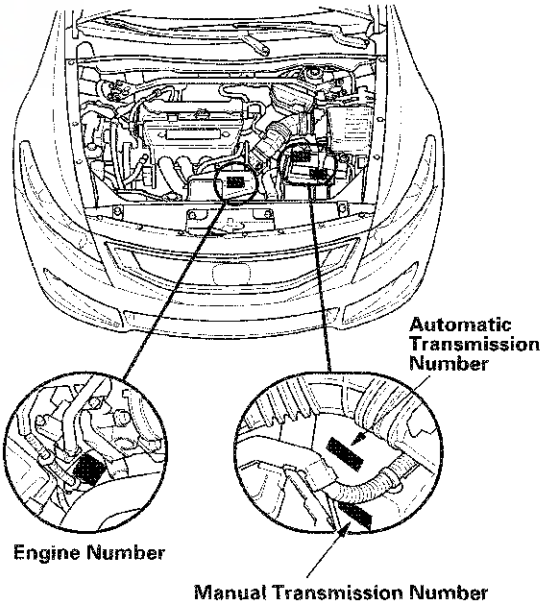

Danger/Warning/Caution Label Locations

4-door

Front Passenger's Compartment:

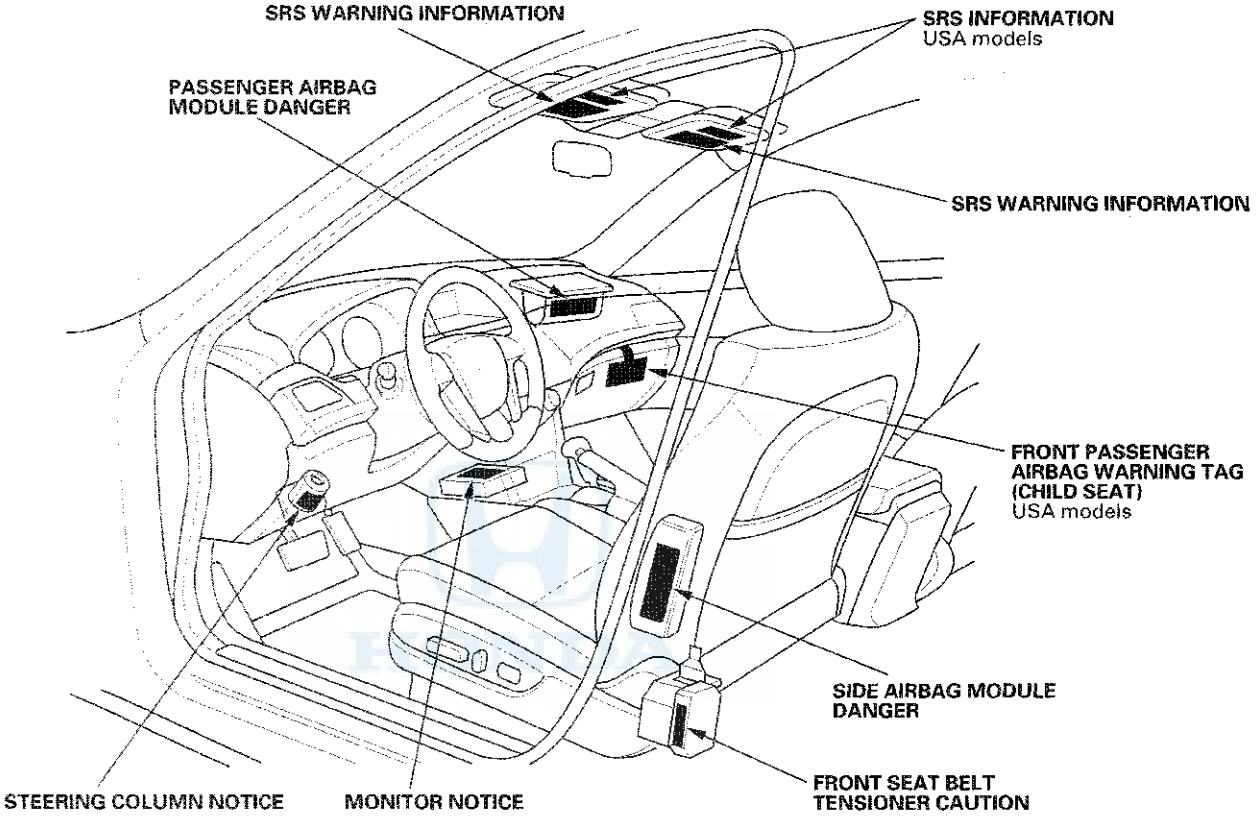

Steering Wheel:

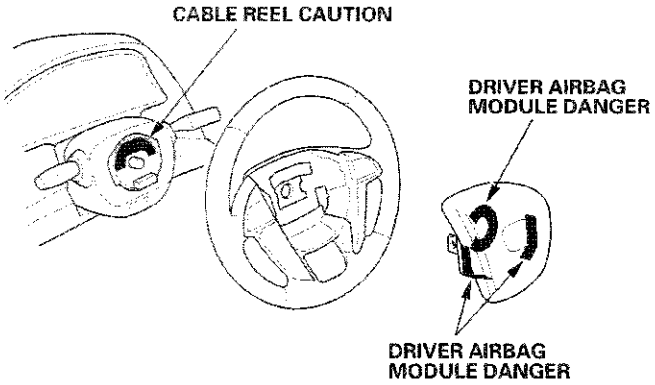

Rear Passenger's Compartment:

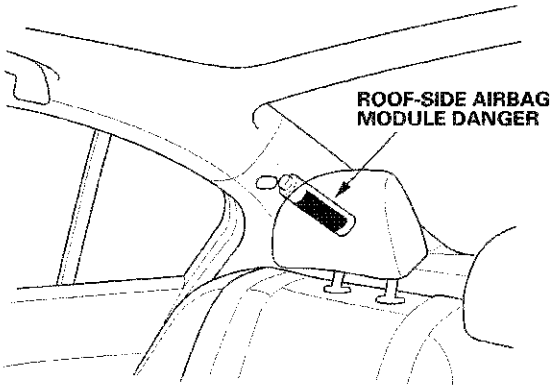

(cont'd)

Danger/Warning/Caution Label Locations (cont'd)

2-door

Front Passenger's Compartment:

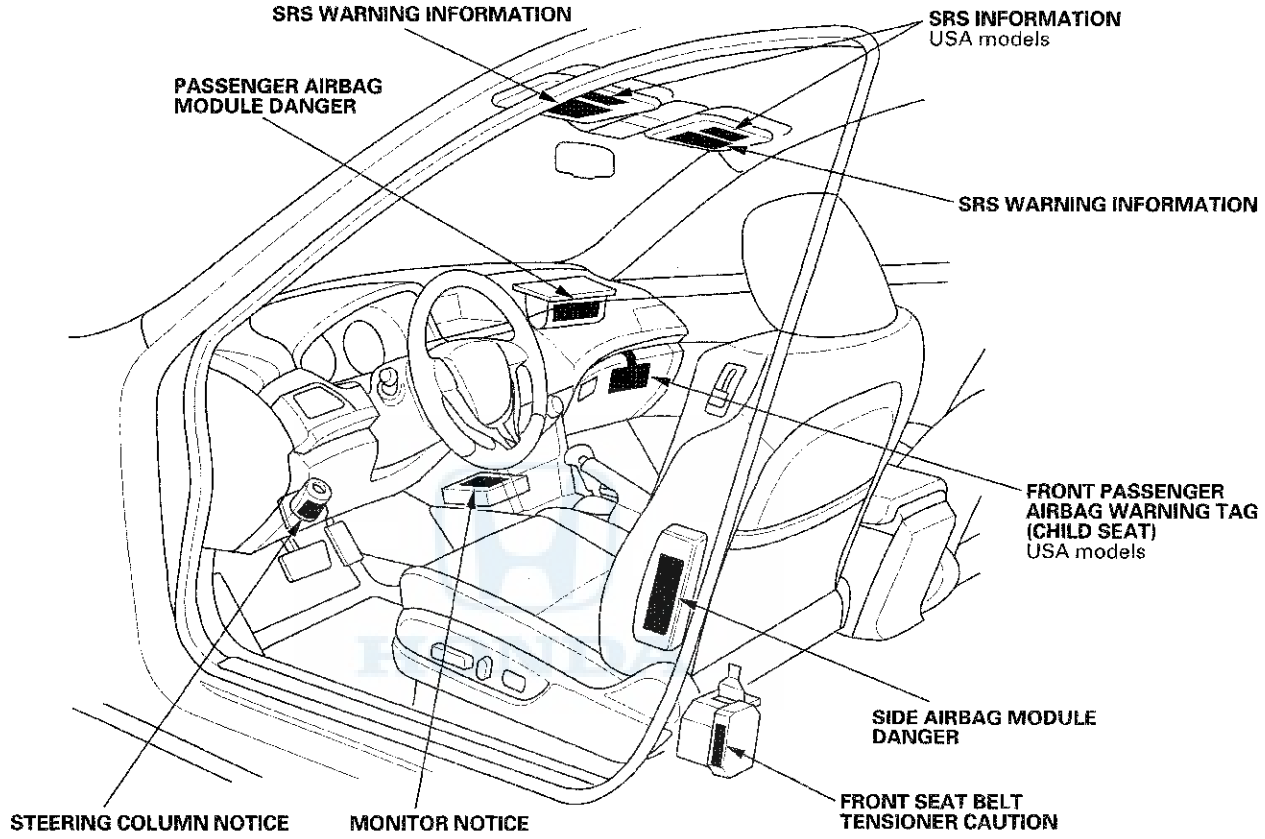

Steering Wheel:

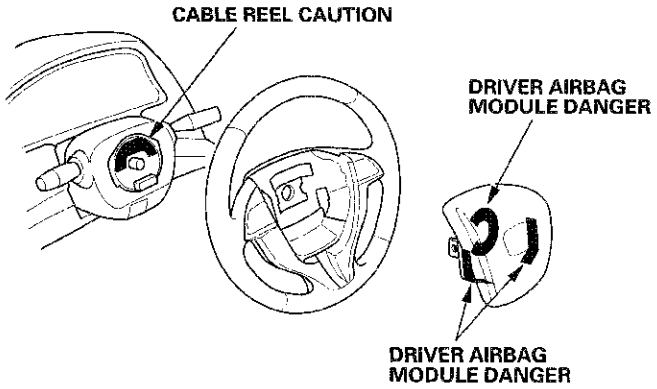

Rear Passenger's Compartment:

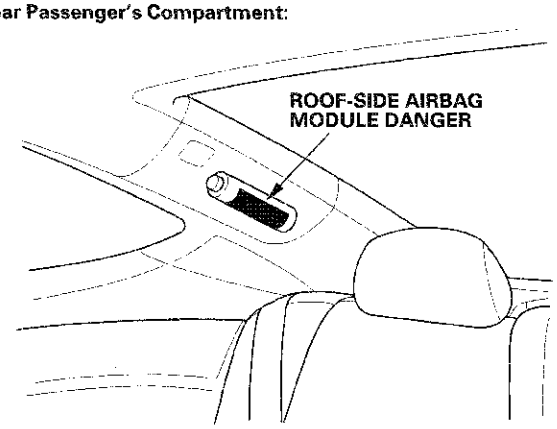

4-door Model:

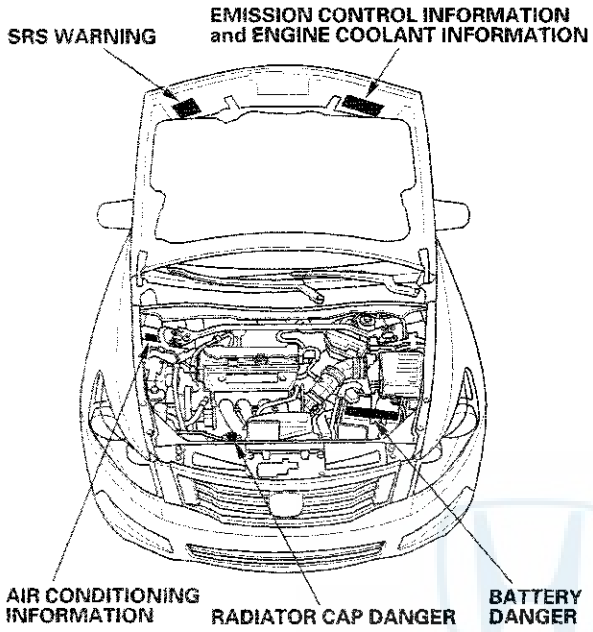

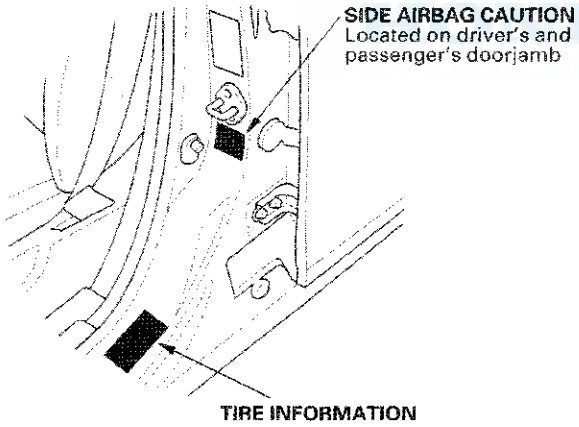

2-door Model:

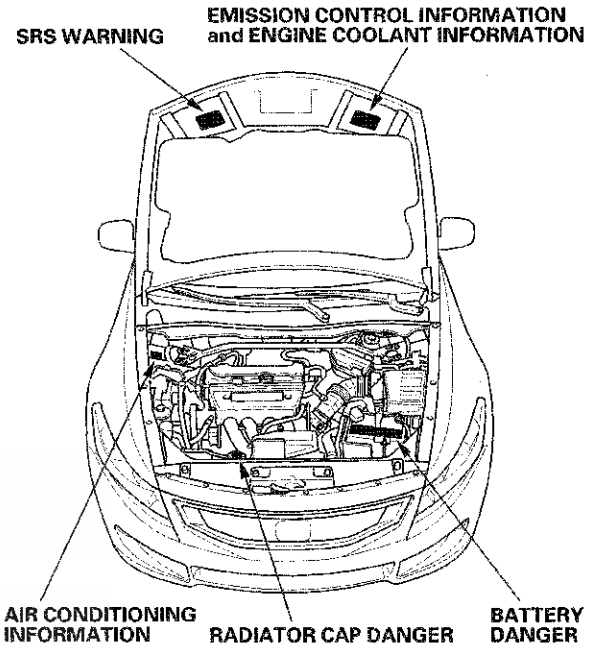

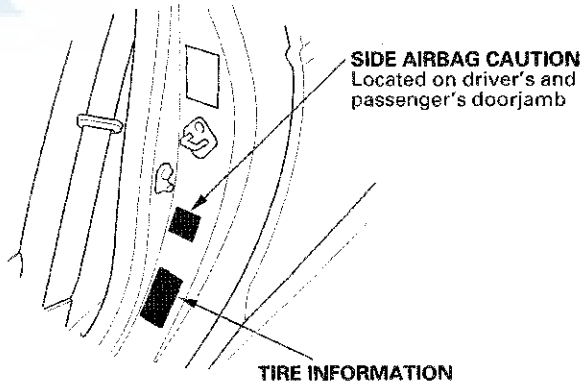

Under-hood Emission Control Label

Emission Group Identification

Example:

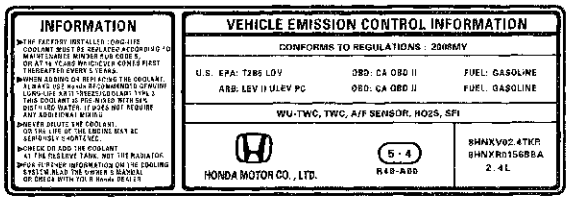

'08 Model
COMFORMS TO REGULATIONS: 2008 MY

'09 Model
COMFORMS TO REGULATIONS: 2009 MY

Test Group and Evaporative Family

Test Group:

9 HNX V 02.4 YB3

a b c d e

a. **Model Year**
   8: '08
   9: '09
b. **Manufacturer Subcode**
   HNX: HONDA
c. **Family Type**
   V: LDV
d. **Displacement Group**
e. **Sequence Characters**
   TKR: '08 model (ULEV)
   EMC: '08 model (SULEV/PZEV)
   YB3: '09 model (ULEV)
   TC3: '09 model (SULEV/PZEV)

Evaporative Family:

9 HNX R 0156 VEA

a b c d e

a. **Model Year**
   8: '08
   9: '09
b. **Manufacturer Subcode**
   HNX: HONDA
c. **Family Type**
   R: Refueling
d. **Canister Working Capacity Group**
e. **Sequence Characters**
   BCA, BBA: '08 model
   VEA, VZA: '09 model

Lift and Support Points

NOTE: If you are going to remove heavy components such as suspension or the fuel tank from the rear of the vehicle, first support the front of the vehicle with tall safety stands. When substantial weight is removed from the rear of the vehicle, the center of gravity can change, causing the vehicle to tip forward on the lift.

Vehicle Lift

1. Position the lift blocks (A) under the vehicle's front support points (B) and rear support points (C).

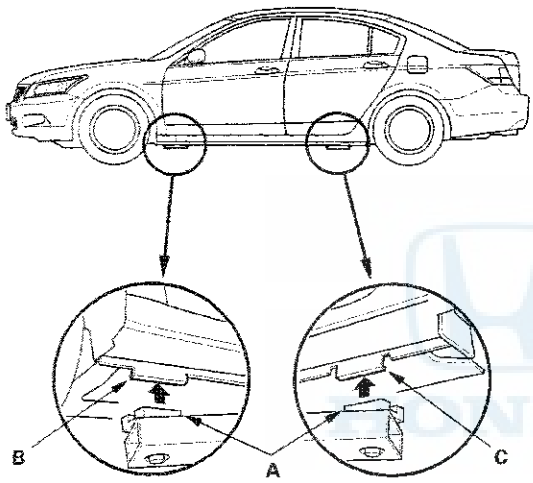

2. Raise the lift a few inches, and rock the vehicle gently to be sure it is firmly supported.

3. Raise the lift to its full height, and inspect the vehicle support points for solid contact with the lift blocks.

Safety Stands

To support the vehicle on safety stands, use the same support points (B and C) as for a vehicle lift. Always use safety stands when working on or under any vehicle that is only supported by a jack.

Floor Jack

1. When lifting the front of the vehicle, set the parking brake. When lifting the rear of the vehicle, put the shift lever in reverse for manual transmission, or in the P position for automatic transmission.

2. Block the wheels that are not being lifted.

3. Position the floor jack under the front jacking bracket (A) or the rear jacking bracket (B). Center the jacking bracket on the jack lift platform (C), and jack up the vehicle high enough to fit the safety stands under it.

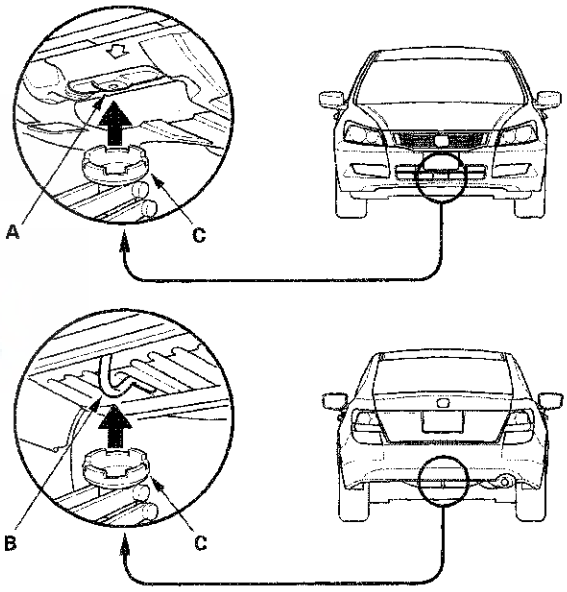

4. Position the safety stands under the support points, and adjust them so the vehicle is level.

5. Lower the vehicle onto the stands.

General Information

Towing

If the vehicle needs to be towed, call a professional towing service. Never tow the vehicle behind another vehicle with just a rope or chain. It is very dangerous.

Emergency Towing
There are three popular methods of towing a vehicle.

Flat-bed Equipment — The operator loads the vehicle on the back of a truck. **This is the best way of transporting the vehicle.**

To accommodate flat-bed equipment, the vehicle is equipped with front towing hooks (A), front tie down hook slots (B), rear towing hook (C), and rear tie down hook slots (D).

The towing hooks can be used with a winch to pull the vehicle onto the truck, and the tie down hook slots can be used to secure the vehicle to the truck.

Front:

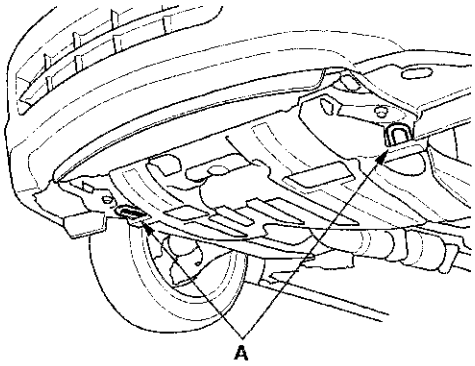

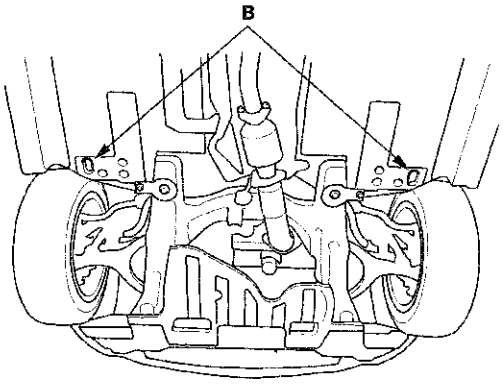

Rear:

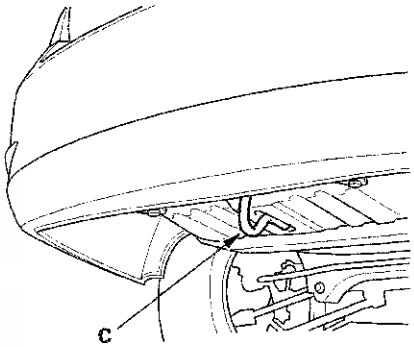

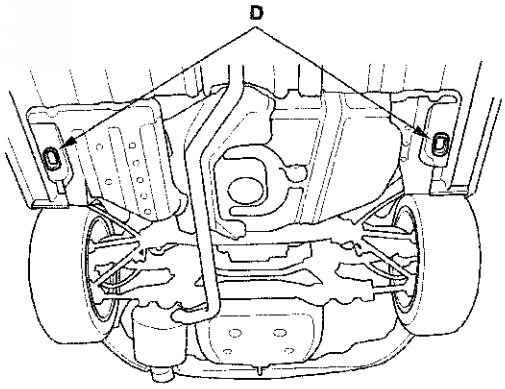

Wheel Lift Equipment — The tow truck uses two pivoting arms that go under the tires (front or rear) and lifts them off the ground. The other two wheels remain on the ground. **This is an acceptable way of towing the vehicle.**

Sling-type Equipment — The tow truck uses metal cables with hooks on the ends. These hooks go around parts of the frame or suspension, and the cables lift that end of the vehicle off the ground. The vehicle's suspension and body can be seriously damaged if this method of towing is attempted. **This method of towing the vehicle is unacceptable.**

If the vehicle cannot be transported by a flat-bed, it should be towed with the front wheels off the ground. If the vehicle is damaged, and must be towed with the front wheels on the ground, or with all four wheels on the ground, do this:

Manual Transmission
- Release the parking brake.
- Shift the transmission in neutral.
- Leave the ignition switch in ACCESSORY (I) so the steering wheel does not lock.
- Make sure all accessories are turned off to minimize battery current draw.

Automatic Transmission
- Release the parking brake.
- Start the engine.
- Shift to D, then to N.
- Turn off the engine.
- Leave the ignition switch in ACCESSORY (I) so the steering wheel does not lock.
- Make sure all accessories are turned off to minimize battery current draw.

It is best to tow the vehicle no farther than 50 miles (80 km), and keep the vehicle speed below 35 mph (55 km/h).

NOTICE
- Improper towing preparation will damage the transmission. Follow the above procedure exactly. If you cannot shift the transmission or start the engine (automatic transmission), the vehicle must be transported on a flat-bed.
- Trying to lift or tow the vehicle by the bumpers will cause serious damage. The bumpers are not designed to support the vehicle's weight.

Parts Marking

To deter vehicle theft, certain major components are marked with the vehicle identification number (VIN). Original parts have self-adhesive labels. Replacement body parts have generic self-adhesive labels. These labels should not be removed. The original engine or transmission VIN plates are not transferable to the replacement engine or transmission.

NOTE: Be careful not to damage the parts marking labels during body repair. Mask the labels before repairing the part.

HONDA

Navigation Tools: Click on the “Table of Contents” below, or use the Bookmarks to the left.

Specifications

Standards and Service Limits

Engine Electrical 2-2
Engine Assembly 2-2
Cylinder Head 2-3
Engine Block 2-4
Engine Lubrication 2-5
Cooling System 2-5
Fuel and Emissions 2-6
Clutch 2-6
Manual Transmission and M/T Differential 2-7
Automatic Transmission and A/T Differential 2-9
Steering 2-15
Suspension 2-15
Brakes 2-16
Air Conditioning 2-16

Design Specifications

Dimensions (4-door) 2-17
Dimensions (2-door) 2-17
Weight (4-door) 2-17
Weight (2-door) 2-17
Engine 2-17
Starter 2-17
Clutch 2-18
Manual Transmission 2-18
Automatic Transmission 2-18
Steering 2-18
Suspension 2-18
Tires 2-18
Wheel Alignment 2-18
Brakes 2-19
Air Conditioning 2-19
Electrical Ratings 2-20
Body Specifications 2-21

Standards and Service Limits

Engine Electrical

Item	Measurement	Qualification	Standard or New	Service Limit
Ignition coil	Rated voltage		12 V	
	Firing order		1—3—4—2	
Spark plug	Type	All models except PZEV	NGK: ILZKR7B-11S DENSO: SXU22HCR11S	
		PZEV	NGK: DILZKR7A11GS	
	Gap		1.0—1.1 mm (0.039—0.043 in.)	——
Ignition timing	At idle Check the *red* mark	M/T (in neutral), A/T (in N or P)	8±2 ° BTDC	
Drive belt	Tension		Auto-tensioner	
Alternator	Output	At 13.5 V and normal engine temperature	105 A	
	Coil (rotor) resistance	At 68 °F (20 °C)	3.4 –3.8 Ω	
	Slip ring O.D.		14.4 mm (0.57 in.)	14.0 mm (0.55 in.)
	Brush length		10.5 mm (0.41 in.)	1.5 mm (0.06 in.)
	Brush spring tension		3.2 N (0.33 kgf, 2.4 lbf)	——
Starter	Output		1.6 kW	
	Commutator mica depth		0.4—0.5 mm (0.016—0.020 in.)	0.15 mm (0.006 in.)
	Commutator runout		0.02 mm (0.001 in.) max.	0.05 mm (0.002 in.)
	Commutator O.D.		28.0—28.1 mm (1.10—1.11 in.)	27.5 mm (1.08 in.)
	Brush length		11.1—11.5 mm (0.440—0.453 in.)	4.3 mm (0.17 in.)

Engine Assembly

Item	Measurement	Qualification	Standard or New
Compression	Pressure	Minimum	930 kPa (9.5 kgf/cm², 135 psi)
	Check the engine with the starter cranking	Maximum variation	200 kPa (2.0 kgf/cm², 28 psi)

Cylinder Head

Item	Measurement	Qualification	Standard or New	Service Limit
Head	Warpage		———	0.05 mm (0.002 in.)
	Height		103.95—104.05 mm (4.093—4.096 in.)	———
Camshaft	End play		0.05—0.20 mm (0.002—0.008 in.)	0.4 mm (0.02 in.)
	Camshaft-to-holder oil clearance	No. 1 journal	0.030—0.069 mm (0.0012—0.003 in.)	0.15 mm (0.006 in.)
		No. 2, 3, 4, 5 journals	0.060—0.099 mm (0.002—0.004 in.)	0.15 mm (0.006 in.)
	Total runout		0.03 mm (0.0012 in.) max.	0.04 mm (0.002 in.)
	Cam lobe height	Intake, primary	33.744 mm (1.3285 in.)	———
		Intake, mid	35.456 mm (1.3959 in.)	———
		Intake, secondary	33.744 mm (1.3285 in.)	———
		All models except PZEV	34.291 mm (1.3500 in.)	———
		PZEV	34.232 mm (1.3477 in.)	———
Valve	Clearance (cold)	Intake	0.21—0.25 mm (0.008—0.010 in.)	———
		Exhaust	0.25—0.29 mm (0.010—0.011 in.)	———
	Stem O.D.	Intake	5.475—5.485 mm (0.2156—0.2159 in.)	5.445 mm (0.214 in.)
		Exhaust	5.450—5.460 mm (0.2146—0.2150 in.)	5.42 mm (0.213 in.)
	Stem-to-guide clearance	Intake	0.030—0.055 mm (0.0012—0.0022 in.)	0.08 mm (0.003 in.)
		Exhaust	0.055—0.080 mm (0.0022—0.0031 in.)	0.11 mm (0.004 in.)
Valve seat	Width	Intake	1.25—1.55 mm (0.049—0.061 in.)	2.00 mm (0.079 in.)
		Exhaust	1.25—1.55 mm (0.049—0.061 in.)	2.00 mm (0.079 in.)
	Stem installed height	Intake	44.0—44.5 mm (1.73—1.75 in.)	44.7 mm (1.76 in.)
		Exhaust	44.0—44.5 mm (1.73—1.75 in.)	44.7 mm (1.76 in.)
Valve spring	Free length	Intake	NIPPON HATSUJO: 47.15 mm (1.856 in.)	———
			CHUO HATSUJO: 47.14 mm (1.856 in.)	———
		Exhaust	48.42 mm (1.906 in.)	———
Valve guide	I.D.	Intake	5.515—5.530 mm (0.2171—0.2177 in.)	5.55 mm (0.219 in.)
		Exhaust	5.515—5.530 mm (0.2171—0.2177 in.)	5.55 mm (0.219 in.)
	Installed height	Intake	15.2—16.2 mm (0.598—0.638 in.)	———
		Exhaust	15.5—16.5 mm (0.610—0.650 in.)	———
Rocker arm	Arm-to-shaft clearance (All models except PZEV)	Intake	0.018—0.059 mm (0.0007—0.0023 in.)	0.08 mm (0.003 in.)
		Exhaust	0.018—0.056 mm (0.0007—0.0022 in.)	0.08 mm (0.003 in.)
	Arm-to-shaft clearance (PZEV)	Intake	0.018—0.059 mm (0.0007—0.0023 in.)	
		Exhaust	0.018—0.059 mm (0.0007—0.0023 in.)	

Standards and Service Limits

Engine Block

Item	Measurement	Qualification	Standard or New	Service Limit
Block	Warpage of deck		0.07 mm (0.003 in.) max.	0.10 mm (0.004 in.)
	Bore diameter	A or I	87.010—87.020 mm (3.4256—3.4260 in.)	87.070 mm (3.4280 in.)
		B or II	87.000—87.010 mm (3.4252—3.4256 in.)	87.070 mm (3.4280 in.)
	Bore taper		——	0.02 mm (0.0008 in.)
	Reboring limit		——	0.25 mm (0.010 in.)
Piston	Skirt O.D. at 11 mm (0.4 in.) from bottom of skirt	No letter or A	86.980—86.990 mm (3.4244—3.4248 in.)	86.930 mm (3.4224 in.)
		Letter B	86.970—86.980 mm (3.4240—3.4244 in.)	86.920 mm (3.4220 in.)
	Clearance in cylinder		0.020—0.040 mm (0.0008—0.0016 in.)	0.05 mm (0.002 in.)
	Ring groove width	Top	1.245—1.255 mm (0.0490—0.0494 in.)	1.265 mm (0.050 in.)
		Second	1.230—1.240 mm (0.0484—0.0488 in.)	1.26 mm (0.050 in.)
		Oil	2.005—2.025 mm (0.0789—0.0797 in.)	2.55 mm (0.100 in.)
Piston ring	Ring-to-groove clearance	Top	0.060—0.085 mm (0.0024—0.0033 in.)	0.13 mm (0.005 in.)
		Second	0.040—0.065 mm (0.0016—0.0026 in.)	0.13 mm (0.005 in.)
	Ring end gap	Top	0.20—0.35 mm (0.008—0.014 in.)	0.60 mm (0.024 in.)
		Second	0.50—0.65 mm (0.020—0.026 in.)	0.70 mm (0.028 in.)
		Oil	0.20—0.70 mm (0.008—0.028 in.)	0.75 mm (0.030 in.)
Piston pin	O.D.		21.961—21.965 mm (0.8646—0.8648 in.)	21.953 mm (0.8643 in.)
	Pin-to-piston clearance		−0.005 to +0.002 mm (−0.00020 to +0.00008 in.)	0.005 mm (0.0002 in.)
Connecting rod	Pin-to-rod clearance		0.005—0.015 mm (0.0002—0.0006 in.)	0.02 mm (0.0008 in.)
	Small-end bore diameter		21.970—21.976 mm (0.8650—0.8652 in.)	——
	Large-end bore diameter		51.0 mm (2.01 in.)	——
	End play installed on crankshaft		0.15—0.35 mm (0.006—0.014 in.)	0.40 mm (0.016 in.)
Crankshaft	Main journal diameter	No. 1, 2, 4, 5 journals	54.984—55.008 mm (2.1647—2.1657 in.)	——
		No. 3 journal	54.976—55.000 mm (2.1644—2.1654 in.)	——
	Rod journal diameter		47.976—48.000 mm (1.8888—1.8898 in.)	——
	Rod/main journal taper		0.005 mm (0.0002 in.) max.	0.010 mm (0.0004 in.)
	Rod/main journal out-of-round		0.004 mm (0.0002 in.) max.	0.010 mm (0.0004 in.)
	End play		0.10—0.35 mm (0.004—0.014 in.)	0.45 mm (0.018 in.)
	Runout		0.03 mm (0.0012 in.) max.	0.04 mm (0.002 in.)
Crankshaft bearing	Main bearing-to-journal oil clearance	No. 1, 2, 4, 5 journals	0.017—0.041 mm (0.0007—0.0016 in.)	0.050 mm (0.0020 in.)
		No. 3 journal	0.025—0.049 mm (0.0010—0.0019 in.)	0.055 mm (0.0022 in.)
	Rod bearing clearance		0.032—0.066 mm (0.0013—0.0026 in.)	0.077 mm (0.0030 in.)

Engine Lubrication

Item	Measurement	Qualification	Standard or New	Service Limit
Engine oil	Capacity	Engine overhaul	5.3 L (5.6 US qt)	
		Oil change including filter	4.2 L (4.4 US qt)	
		Oil change without filter	4.0 L (4.2 US qt)	
Oil pump	Inner-to-outer rotor clearance		0.05—0.15 mm (0.002—0.006 in.)	0.19 mm (0.008 in.)
	Pump housing-to-outer rotor radial clearance		0.15—0.21 mm (0.006—0.008 in.)	0.23 mm (0.009 in.)
	Pump housing-to-rotor axial clearance		0.035—0.070 mm (0.0014—0.0028 in.)	0.12 mm (0.005 in.)
	Balancer shafts, journal diameter	No. 1 journal, front shaft	19.938—19.950 mm (0.7850—0.7854 in.)	19.92 mm (0.784 in.)
		No. 1 journal, rear shaft	23.938—23.950 mm (0.9424—0.9429 in.)	23.92 mm (0.942 in.)
		No. 2 journal, front and rear shafts	32.949—32.961 mm (1.2972—1.2977 in.)	32.93 mm (1.296 in.)
	Balancer shafts, journal taper		0.005 mm (0.0002 in.) max.	———
	Balancer shafts, end play	Front	0.063—0.108 mm (0.0025—0.0043 in.)	0.14 mm (0.006 in.)
		Rear	0.063—0.108 mm (0.0025—0.0043 in.)	0.14 mm (0.006 in.)
	Balancer shafts, shaft-to-bearing clearance	No. 1 journal, front shaft	0.050—0.082 mm (0.0020—0.0032 in.)	0.10 mm (0.004 in.)
		No. 1 journal, rear shaft	0.050—0.082 mm (0.0020—0.0032 in.)	0.10 mm (0.004 in.)
		No. 2 journal, front and rear shafts	0.060—0.120 mm (0.0024—0.0047 in.)	0.15 mm (0.006 in.)
	Balancer shaft bearings, I.D.	No. 1 journal, front shaft	20.000—20.020 mm (0.7874—0.7882 in.)	20.03 mm (0.789 in.)
		No. 1 journal, rear shaft	24.000—24.020 mm (0.9449—0.9457 in.)	24.03 mm (0.946 in.)
		No. 2 journal, front and rear shafts	33.021—33.069 mm (1.3000—1.3019 in.)	33.09 mm (1.303 in.)
	Relief valve, oil pressure with oil temperature at 176 °F (80 °C)	At idle	70 kPa (0.7 kgf/cm², 10 psi) min.	
		At 3,000 rpm	300 kPa (3.1 kgf/cm², 44 psi) min.	

Cooling System

Item	Measurement	Qualification	Standard or New	
Radiator	Coolant capacities (including engine, heater, hoses, and reservoir) Use Honda Long Life Antifreeze/Coolant Type 2 NOTE: If the vehicle is regularly driven in very low temperatures (under −31 °F (−35 °C)), a higher concentration of coolant should be used (see page 10-6).	M/T: engine overhaul	DENSO	8.2 L (2.17 US gal)
			TRAD	8.1 L (2.14 US gal)
		M/T: coolant change	DENSO	6.1 L (1.61 US gal)
			TRAD	6.0 L (1.59 US gal)
		A/T: engine overhaul	DENSO	8.1 L (2.14 US gal)
			TRAD	8.0 L (2.11 US gal)
		A/T: coolant change	DENSO	6.0 L (1.59 US gal)
			TRAD	5.9 L (1.56 US gal)
Coolant reservoir	Coolant capacity		0.68 L (0.180 US gal)	
Radiator cap	Opening pressure		93—123 kPa (0.95—1.25 kgf/cm², 14—18 psi)	
Thermostat	Opening temperature	Begins to open	169—176 °F (76—80 °C)	
		Fully open	194 °F (90 °C)	
	Valve lift at fully open		8.0 mm (0.31 in.) min.	

Standards and Service Limits

Fuel and Emissions

Item	Measurement	Qualification	Standard or New
Fuel pressure regulator	Pressure with regulator vacuum hose disconnected		330—380 kPa (3.4—3.9 kgf/cm², 48—55 psi)
Fuel tank	Capacity		70 L (18.5 US gal)
Engine idle	Idle speed without load	M/T (in neutral)	780±50 rpm
		A/T (in N or P)	800±50 rpm
	Idle speed with high electrical load (A/C switch ON, temperature set to max cool, blower fan on High, rear window defogger ON, and headlights on high beam)	M/T (in neutral)	780±50 rpm
		A/T (in N or P)	800±50 rpm

Clutch

Item	Measurement	Qualification	Standard or New	Service Limit
Clutch pedal	Height from floor		174 mm (6.85 in.)	——
	Stroke		130—140 mm (5.12—5.51 in.)	——
Flywheel	Runout on clutch mating surface		0.05 mm (0.002 in.) max.	0.15 mm (0.006 in.)
Clutch disc	Rivet head depth		1.15—1.75 mm (0.045—0.069 in.)	0.7 mm (0.03 in.)
	Thickness		7.30—7.90 mm (0.287—0.311 in.)	6.0 mm (0.24 in.)
Pressure plate	Warpage		0.03 mm (0.001 in.) max.	0.15 mm (0.006 in.)
	Evenness of the height of the diaphragm spring fingers		0.6 mm (0.02 in.) max.	0.8 mm (0.03 in.)

HONDA

Manual Transmission and M/T Differential

Item	Measurement	Qualification	Standard or New	Service Limit
Manual transmission fluid	Capacity Use Honda MTF	Fluid change	1.9 L (2.0 US qt)	
		Overhaul	2.0 L (2.1 US qt)	
Mainshaft	End play		0.11—0.17 mm (0.004—0.007 in.)	Adjust
	Diameter of ball bearing contact area (transmission housing side)		27.987—28.000 mm (1.1019—1.1024 in.)	27.93 mm (1.100 in.)
	Diameter of 4th/5th gear distance collar contact area		31.984—32.000 mm (1.2592—1.2598 in.)	31.93 mm (1.257 in.)
	Diameter of needle bearing contact area		38.984—39.000 mm (1.5348—1.5354 in.)	38.93 mm (1.533 in.)
	Diameter of ball bearing contact area (clutch housing side)		27.977—27.990 mm (1.1015—1.1020 in.)	27.92 mm (1.099 in.)
	Diameter of bushing contact area		20.80—20.85 mm (0.819—0.821 in.)	20.75 mm (0.817 in.)
	Runout		0.02 mm (0.001 in.) max.	0.05 mm (0.002 in.)
Mainshaft 3rd, 4th, and 5th gear	I.D.		44.009—44.025 mm (1.7326—1.7333 in.)	44.08 mm (1.735 in.)
	Clearance	2nd—3rd	0.06—0.16 mm (0.002—0.006 in.)	0.25 mm (0.010 in.)
	End play (distance collar side)	4th, 5th	0.06—0.16 mm (0.002—0.006 in.)	0.25 mm (0.010 in.)
	Thickness		23.92—23.97 mm (0.942—0.944 in.)	23.80 mm (0.937 in.)
Mainshaft 4th/5th gear distance collar	I.D.		32.00—32.01 mm (1.2598—1.2602 in.)	32.02 mm (1.261 in.)
	O.D.		38.989—39.000 mm (1.5350—1.5354 in.)	38.94 mm (1.533 in.)
	Length 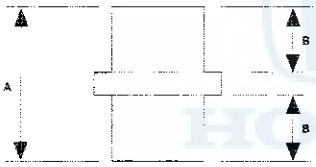	A	51.95—52.05 mm (2.045—2.049 in.)	———
		B	24.03—24.08 mm (0.946—0.948 in.)	———
MBS distance collar	I.D.		28.00—28.10 mm (1.102—1.106 in.)	28.12 mm (1.107 in.)
	Length		23.95—24.05 mm (0.943—0.947 in.)	———
Countershaft	Diameter of ball bearing contact area (transmission housing side)		30.020—30.033 mm (1.1819—1.1824 in.)	29.97 mm (1.180 in.)
	Diameter of 1st gear distance collar contact area		39.937—39.950 mm (1.5723—1.5728 in.)	39.88 mm (1.570 in.)
	Diameter of needle bearing contact area (clutch housing side)		40.000—40.015 mm (1.5748—1.5754 in.)	39.95 mm (1.573 in.)
	Runout		0.02 mm (0.001 in.) max.	0.05 mm (0.002 in.)
	35 mm shim-to-bearing inner race clearance		0.04—0.10 mm (0.0016—0.0039 in.)	Adjust
Countershaft 1st and 2nd gear	I.D.		52.010—52.029 mm (2.0476—2.0484 in.)	52.08 mm (2.050 in.)
	End play (distance collar side)	1st	0.06—0.16 mm (0.002—0.006 in.)	0.25 mm (0.010 in.)
	Clearance	2nd—3rd	0.06—0.16 mm (0.002—0.006 in.)	0.25 mm (0.010 in.)
	Thickness	1st	22.92—22.97 mm (0.902—0.904 in.)	22.87 mm (0.900 in.)
		2nd	27.92—27.97 mm (1.099—1.101 in.)	27.87 mm (1.097 in.)
Countershaft 1st and 2nd gear distance collar	I.D.		39.95—39.96 mm (1.5728—1.5732 in.)	39.97 mm (1.574 in.)
	O.D.		46.989—47.000 mm (1.8500—1.8504 in.)	46.94 mm (1.848 in.)
	Length	1st	23.03—23.08 mm (0.907—0.909 in.)	———
		2nd	28.03—28.08 mm (1.104—1.106 in.)	———

(cont'd)

Standards and Service Limits

Manual Transmission and M/T Differential (cont'd)

Item	Measurement	Qualification	Standard or New	Service Limit
Reverse idler gear	I.D.		20.016—20.043 mm (0.7880—0.7891 in.)	20.90 mm (0.823 in.)
	Gear-to-reverse idler gear shaft clearance		0.036—0.084 mm (0.0014—0.0033 in.)	0.16 mm (0.006 in.)
Synchro ring	Ring-to-gear clearance	Ring pushed against gear	0.70—1.49 mm (0.028—0.059 in.)	0.4 mm (0.016 in.)
Double cone synchro and triple cone synchro	Outer synchro ring-to-synchro cone clearance	Ring pushed against gear	0.70—1.19 mm (0.028—0.047 in.)	0.3 mm (0.012 in.)
	Synchro cone-to-gear clearance	Ring pushed against gear	0.50—1.04 mm (0.020—0.041 in.)	0.3 mm (0.012 in.)
	Outer synchro ring-to-gear clearance	Ring pushed against gear	0.95—1.68 mm (0.037—0.066 in.)	0.6 mm (0.024 in.)
Shift fork	Finger thickness		7.4—7.6 mm (0.29—0.30 in.)	———
	Fork-to-synchro sleeve clearance		0.35—0.65 mm (0.014—0.026 in.)	1.0 mm (0.039 in.)
Reverse shift fork	Finger width		13.4—13.7 mm (0.528—0.539 in.)	———
	Fork-to-reverse idler gear clearance		0.20—0.59 mm (0.008—0.023 in.)	1.2 mm (0.047 in.)
Shift arm	I.D.		13.973—14.000 mm (0.5501—0.5512 in.)	———
	Finger width		16.9—17.0 mm (0.665—0.669 in.)	———
	Shift arm-to-shift fork clearance		0.2—0.5 mm (0.008—0.020 in.)	0.6 mm (0.024 in.)
Select lever	Finger width		14.85—14.95 mm (0.585—0.589 in.)	———
Change lever	Shaft-to-select lever clearance		0.05—0.25 mm (0.002—0.010 in.)	0.50 mm (0.020 in.)
	Groove width		15.00—15.10 mm (0.591—0.594 in.)	———
	Shaft-to-shift arm clearance		0.013—0.070 mm (0.0005—0.0028 in.)	0.1 mm (0.004 in.)
M/T differential carrier	Backlash		0.028—0.103 mm (0.0011—0.0041 in.)	———
M/T differential 80 mm shim	80 mm shim-to-bearing outer race clearance in transmission housing		0—0.10 mm (0—0.0039 in.)	Adjust

HONDA

Automatic Transmission and A/T Differential

Item	Measurement	Qualification	Standard or New	Service Limit
Automatic transmission fluid	Capacity Use Honda ATF-Z1	Fluid change	2.5 L (2.6 US qt)	
		Overhaul	6.5 L (6.9 US qt)	
ATF pressure	Line pressure	At 2,000 rpm in N or P	927—985 kPa (9.45—10.05 kgf/cm², 134—143 psi)	877 kPa (8.95 kgf/cm², 127 psi)
	1st clutch pressure	At 2,000 rpm in 1	917—995 kPa (9.35—10.15 kgf/cm², 132—144 psi)	867 kPa (8.85 kgf/cm², 126 psi)
	2nd clutch pressure	At 2,000 rpm in 2	917—995 kPa (9.35—10.15 kgf/cm², 132—144 psi)	867 kPa (8.85 kgf/cm², 126 psi)
	3rd clutch pressure	At 2,000 rpm in 3rd gear in D	917—995 kPa (9.35—10.15 kgf/cm², 132—144 psi)	867 kPa (8.85 kgf/cm², 126 psi)
	4th clutch pressure	At 2,000 rpm in 4th gear in D	917—995 kPa (9.35—10.15 kgf/cm², 132—144 psi)	867 kPa (8.85 kgf/cm², 126 psi)
	5th clutch pressure	At 2,000 rpm in 5th gear in D	917—995 kPa (9.35—10.15 kgf/cm², 132—144 psi)	867 kPa (8.85 kgf/cm², 126 psi)
Torque converter	Stall speed Check with vehicle on level ground		2,100 rpm	1,950—2,250 rpm
Clutch	Clearance between clutch end-plate and top disc	1st	1.38—1.58 mm (0.054—0.062 in.)	———
		2nd	1.14—1.34 mm (0.045—0.053 in.)	———
		3rd	1.23—1.43 mm (0.048—0.056 in.)	———
		4th, 5th	0.93—1.13 mm (0.037—0.044 in.)	———
	Clutch return spring free length	1st, 2nd, 3rd	45.1 mm (1.78 in.)	43.1 mm (1.70 in.)
		4th, 5th	33.5 mm (1.32 in.)	31.5 mm (1.24 in.)
	Clutch disc thickness		1.94 mm (0.076 in.)	———
	Clutch plate thickness	1st, 3rd	1.6 mm (0.063 in.)	When discolored
		2nd	2.0 mm (0.079 in.)	When discolored
		4th, 5th	2.0 mm (0.079 in.)	When discolored
	Clutch wave-plate phase difference	1st	0.15—0.20 mm (0.006—0.008 in.) <2PLCS>	0.13 mm (0.005 in.) <2PLCS>
		2nd, 3rd, 4th, 5th	0.10—0.20 mm (0.004—0.008 in.) <2PLCS>	0.08 mm (0.003 in.) <2PLCS>

(cont'd)

Standards and Service Limits

Automatic Transmission and A/T Differential (cont'd)

Item	Measurement	Qualification	Standard or New	Service Limit
Clutch (cont'd)	1st clutch end-plate thickness	Mark 1	2.6 mm (0.102 in.)	When discolored
		Mark 2	2.7 mm (0.106 in.)	When discolored
		Mark 3	2.8 mm (0.110 in.)	When discolored
		Mark 4	2.9 mm (0.114 in.)	When discolored
		Mark 5	3.0 mm (0.118 in.)	When discolored
		Mark 6	3.1 mm (0.122 in.)	When discolored
		Mark 7	3.2 mm (0.126 in.)	When discolored
		Mark 8	3.3 mm (0.130 in.)	When discolored
		Mark 9	3.4 mm (0.134 in.)	When discolored
	2nd clutch end-plate thickness	Mark 10	2.4 mm (0.094 in.)	When discolored
		Mark 11	2.5 mm (0.098 in.)	When discolored
		Mark 1	2.6 mm (0.102 in.)	When discolored
		Mark 2	2.7 mm (0.106 in.)	When discolored
		Mark 3	2.8 mm (0.110 in.)	When discolored
		Mark 4	2.9 mm (0.114 in.)	When discolored
		Mark 5	3.0 mm (0.118 in.)	When discolored
		Mark 6	3.1 mm (0.122 in.)	When discolored
		Mark 7	3.2 mm (0.126 in.)	When discolored
	3rd, 4th, 5th clutch end-plate thickness	Mark 1	2.1 mm (0.083 in.)	When discolored
		Mark 2	2.2 mm (0.087 in.)	When discolored
		Mark 3	2.3 mm (0.091 in.)	When discolored
		Mark 4	2.4 mm (0.095 in.)	When discolored
		Mark 5	2.5 mm (0.098 in.)	When discolored
		Mark 6	2.6 mm (0.102 in.)	When discolored
		Mark 7	2.7 mm (0.106 in.)	When discolored
		Mark 8	2.8 mm (0.110 in.)	When discolored
		Mark 9	2.9 mm (0.114 in.)	When discolored

Item	Measurement	Qualification	Standard or New	Service Limit
Mainshaft	Diameter of needle bearing contact area	At stator shaft	22.984—23.000 mm (0.905—0.906 in.)	When worn or damaged
		At 5th gear	51.975—51.991 mm (2.046—2.047 in.)	When worn or damaged
		At 4th gear collar	33.975—33.991 mm (1.3376—1.3382 in.)	When worn or damaged
	I.D. of gears	5th gear	57.000—57.019 mm (2.2441—2.2448 in.)	When worn or damaged
		4th gear	40.000—40.016 mm (1.5748—1.5754 in.)	When worn or damaged
	End play of gears	5th gear	0.04—0.10 mm (0.016—0.040 in.)	———
		4th gear	0.1—0.22 mm (0.004—0.009 in.)	———
	41 x 68 mm thrust washer thickness	No. 1	4.450 mm (0.1752 in.)	When worn or damaged
		No. 2	4.475 mm (0.1762 in.)	When worn or damaged
		No. 3	4.500 mm (0.1772 in.)	When worn or damaged
		No. 4	4.525 mm (0.1781 in.)	When worn or damaged
		No. 5	4.550 mm (0.1791 in.)	When worn or damaged
		No. 6	4.575 mm (0.1801 in.)	When worn or damaged
		No. 7	4.600 mm (0.1811 in.)	When worn or damaged
		No. 8	4.625 mm (0.1821 in.)	When worn or damaged
		No. 9	4.650 mm (0.1831 in.)	When worn or damaged
		No. 10	4.675 mm (0.1841 in.)	When worn or damaged
		No. 11	4.700 mm (0.1850 in.)	When worn or damaged
		No. 12	4.725 mm (0.1860 in.)	When worn or damaged
		No. 13	4.750 mm (0.1870 in.)	When worn or damaged
		No. 14	4.775 mm (0.1880 in.)	When worn or damaged
		No. 15	4.800 mm (0.1890 in.)	When worn or damaged
	4th gear collar length		66.3—66.4 mm (2.610—2.614 in.)	———
	Length of 4th gear collar flange from end		19.15—19.30 mm (0.754—0.760 in.)	When worn or damaged
	Sealing ring thickness		1.91—1.97 mm (0.075—0.078 in.)	1.86 mm (0.073 in.)
	Width of sealing ring groove		2.025—2.060 mm (0.0797—0.0811 in.)	2.080 mm (0.0819 in.)
	Clutch feed pipe O.D.		7.97—7.98 mm (0.3138—0.3142 in.)	7.95 mm (0.313 in.)
	Clutch feed pipe bushing I.D.		8.000—8.015 mm (0.3150—0.3156 in.)	8.030 mm (0.3161 in.)
Countershaft	Diameter of needle bearing contact area	At torque converter housing	36.005—36.015 mm (1.4175—1.4179 in.)	When worn or damaged
		At 4th gear	34.982—34.998 mm (1.3772—1.3779 in.)	When worn or damaged
		At reverse gear	39.979—40.000 mm (1.5740—1.5748 in.)	When worn or damaged
	I.D. of gears	4th gear	41.000—41.016 mm (1.6142—1.6148 in.)	When worn or damaged
		Reverse gear	46.000—46.016 mm (1.8110—1.8116 in.)	When worn or damaged
	End play of gears	5th gear	0.00—0.48 mm (0.000—0.019 in.)	———
		4th gear	0.04—0.12 mm (0.002—0.005 in.)	———
		Reverse gear	0.10—0.25 mm (0.004—0.010 in.)	———
	Collar, 35 x 47 x 7.8 mm thickness		7.8 mm (0.31 in.)	———
	Collar, 37 x 41 x 54.3 mm length		54.25—54.30 mm (2.136—2.138 in.)	———
	Reverse selector hub width		25.45—25.65 mm (1.002—1.010 in.)	———
	Reverse selector hub O.D.		55.87—55.90 mm (2.200—2.201 in.)	When worn or damaged

(cont'd)

Standards and Service Limits

Automatic Transmission and A/T Differential (cont'd)

Item	Measurement	Qualification	Standard or New	Service Limit
Secondary shaft	Diameter of needle bearing contact area	At 1st gear	39.986—39.999 mm (1.5742—1.5748 in.)	When worn or damaged
		At 2nd gear	39.986—39.999 mm (1.5742—1.5748 in.)	When worn or damaged
		At 3rd gear collar	36.975—36.991 mm (1.4557—1.4563 in.)	When worn or damaged
	I.D. of gears	1st gear	47.000—47.016 mm (1.8504—1.8510 in.)	When worn or damaged
		2nd gear	46.000—46.016 mm (1.8110—1.8116 in.)	When worn or damaged
		3rd gear	43.000—43.016 mm (1.6929—1.6935 in.)	When worn or damaged
	End play of gears	1st gear	0.04—0.12 mm (0.002—0.005 in.)	———
		2nd gear	0.04—0.12 mm (0.002—0.005 in.)	———
		3rd gear	0.10—0.22 mm (0.004—0.009 in.)	———
	37 x 58 mm thrust washer thickness	No. 1	3.900 mm (0.154 in.)	When worn or damaged
		No. 2	3.925 mm (0.155 in.)	When worn or damaged
		No. 3	3.950 mm (0.156 in.)	When worn or damaged
		No. 4	3.975 mm (0.156 in.)	When worn or damaged
		No. 5	4.000 mm (0.157 in.)	When worn or damaged
		No. 6	4.025 mm (0.158 in.)	When worn or damaged
		No. 7	4.050 mm (0.159 in.)	When worn or damaged
		No. 8	4.075 mm (0.160 in.)	When worn or damaged
		No. 9	4.100 mm (0.161 in.)	When worn or damaged
		No. 10	4.125 mm (0.162 in.)	When worn or damaged
		No. 11	4.150 mm (0.163 in.)	When worn or damaged
		No. 12	4.175 mm (0.164 in.)	When worn or damaged
		No. 13	4.200 mm (0.165 in.)	When worn or damaged
		No. 14	4.225 mm (0.166 in.)	When worn or damaged
		No. 15	4.250 mm (0.167 in.)	When worn or damaged
		No. 16	4.275 mm (0.168 in.)	When worn or damaged
		No. 17	4.300 mm (0.169 in.)	When worn or damaged
		No. 18	4.325 mm (0.170 in.)	When worn or damaged
		No. 19	4.350 mm (0.171 in.)	When worn or damaged
		No. 20	4.375 mm (0.172 in.)	When worn or damaged
	40 x 51.5 mm thrust washer thickness	No. 1	4.80 mm (0.189 in.)	When worn or damaged
		No. 2	4.85 mm (0.191 in.)	When worn or damaged
		No. 3	4.90 mm (0.193 in.)	When worn or damaged
		No. 4	4.95 mm (0.195 in.)	When worn or damaged
		No. 5	5.00 mm (0.197 in.)	When worn or damaged
		No. 6	5.05 mm (0.199 in.)	When worn or damaged
	3rd gear collar length		43.9—44.0 mm (1.728—1.732 in.)	———
	Length of 3rd gear collar flange from end		5.25—5.40 mm (0.207—0.213 in.)	When worn or damaged
	Sealing ring thickness		1.91—1.97 mm (0.0752—0.0776 in.)	1.86 mm (0.0732 in.)
	Width of sealing ring groove		2.025—2.060 mm (0.0797—0.0811 in.)	2.080 mm (0.0819 in.)
	Clutch feed pipe O.D.	3rd clutch feed pipe	11.47—11.48 mm (0.4516—0.4520 in.)	11.45 mm (0.4508 in.)
		1st clutch feed pipe	6.97—6.98 mm (0.2744—0.2748 in.)	6.95 mm (0.2736 in.)
	Clutch feed pipe bushing I.D.	3rd clutch feed pipe	11.500—11.518 mm (0.4528—0.4535 in.)	11.530 mm (0.4539 in.)
		1st clutch feed pipe	7.018—7.030 mm (0.2763—0.2768 in.)	7.045 mm (0.2774 in.)
	ATF guide collar of sealing ring contact I.D.		29.000—29.021 mm (1.1417—1.1426 in.)	29.05 mm (1.144 in.)

Item	Measurement	Qualification	Standard or New	Service Limit
Idler gear shaft	Diameter of needle bearing contact area	End cover side	32.003—32.013 mm (1.2600—1.2604 in.)	When worn or damaged
	Thickness of cotters		1.39—1.42 mm (0.055—0.056 in.)	———
Reverse idler gear	Reverse idler gear shaft diameter at needle bearing contact area		14.99—15.00 mm (0.590—0.591 in.)	When worn or damaged
	I.D.		20.007—20.020 mm (0.7877—0.7882 in.)	When worn or damaged
	I.D. of reverse idler gear shaft contact area on transmission housing		14.800—14.818 mm (0.5827—0.5834 in.)	———
	I.D. of reverse idler gear shaft holder		14.800—14.824 mm (0.5827—0.5836 in.)	When worn or damaged
ATF pump	ATF pump thrust clearance		0.03—0.06 mm (0.001—0.002 in.)	0.07 mm (0.003 in.)
	Clearance between ATF pump gear and body	Drive gear	0.210—0.265 mm (0.0083—0.0104 in.)	———
		Driven gear	0.070—0.125 mm (0.0028—0.0049 in.)	———
	ATF pump driven gear I.D.		14.016—14.034 mm (0.5518—0.5525 in.)	When worn or damaged
	ATF pump driven gear shaft O.D.		13.980—13.990 mm (0.5504—0.5508 in.)	When worn or damaged
Stator shaft	Needle bearing contact I.D.	Torque converter side	27.000—27.021 mm (1.0630—1.0638 in.)	When worn or damaged
		ATF pump side	29.000—29.021 mm (1.1417—1.1426 in.)	———
	Sealing ring contact area I.D.		29.000—29.021 mm (1.1417—1.1426 in.)	29.05 mm (1.144 in.)
Reverse shift fork	Fork finger thickness		5.90—6.00 mm (0.232—0.236 in.)	5.40 mm (0.213 in.)
Park gear and pawl			———	When worn or damaged
Servo body	Shift fork shaft bore I.D.		14.000—14.010 mm (0.5512—0.5516 in.)	———
	Shift fork shaft valve bore I.D.		37.000—37.039 mm (1.4567—1.4582 in.)	37.045 mm (1.4585 in.)
Regulator valve body	Sealing ring contact I.D.		29.000—29.021 mm (1.1417—1.1426 in.)	29.05 mm (1.144 in.)

Item	Measurement	Qualification	Standard or New			
			Wire Diameter	O.D.	Free Length	No. of Coils
Main valve body spring (see page 14-322)	Shift valve A spring		0.8 mm (0.031 in.)	5.6 mm (0.220 in.)	28.1 mm (1.106 in.)	15.9
	Shift valve B spring		0.8 mm (0.031 in.)	5.6 mm (0.220 in.)	28.1 mm (1.106 in.)	15.9
	Shift valve C spring		0.8 mm (0.031 in.)	5.6 mm (0.220 in.)	28.1 mm (1.106 in.)	15.9
	Relief valve spring		1.0 mm (0.039 in.)	9.6 mm (0.378 in.)	34.1 mm (1.343 in.)	10.2
	Lock-up control valve spring		0.65 mm (0.026 in.)	7.1 mm (0.280 in.)	23.1 mm (0.909 in.)	12.7
	Cooler check valve spring		0.85 mm (0.034 in.)	6.6 mm (0.260 in.)	27.0 mm (1.063 in.)	11.3
	Servo control valve spring		0.7 mm (0.028 in.)	6.6 mm (0.260 in.)	35.7 mm (1.406 in.)	17.2
	Shift valve E spring		0.8 mm (0.031 in.)	5.6 mm (0.220 in.)	28.1 mm (1.106 in.)	15.9

(cont'd)

Standards and Service Limits

Automatic Transmission and A/T Differential (cont'd)

Item	Measurement	Qualification	Standard or New			
			Wire Diameter	O.D.	Free Length	No. of Coils
Regulator valve body spring (see page 14-324)	Stator reaction spring		4.5 mm (0.177 in.)	35.4 mm (1.394 in.)	30.3 mm (1.193 in.)	1.92
	Regulator valve spring A		1.85 mm (0.073 in.)	14.7 mm (0.579 in.)	83.0 mm (3.268 in.)	16.9
	Regulator valve spring B		1.6 mm (0.063 in.)	9.2 mm (0.362 in.)	44.0 mm (1.732 in.)	12.5
	Torque converter check valve spring		1.2 mm (0.047 in.)	8.6 mm (0.339 in.)	33.8 mm (1.331 in.)	12.2
	Lock-up shift valve spring		1.0 mm (0.039 in.)	6.6 mm (0.260 in.)	35.5 mm (1.398 in.)	18.2
	3rd accumulator spring		2.5 mm (0.098 in.)	14.6 mm (0.575 in.)	29.4 mm (1.157 in.)	4.9
	1st accumulator spring A		2.4 mm (0.094 in.)	18.6 mm (0.732 in.)	49.0 mm (1.929 in.)	7.1
	1st accumulator spring B		2.3 mm (0.091 in.)	12.2 mm (0.480 in.)	31.5 mm (1.240 in.)	6.6
Servo body spring (see page 14-325)	Shift valve D spring		0.8 mm (0.031 in.)	5.6 mm (0.220 in.)	28.1 mm (1.106 in.)	15.9
	4th accumulator spring B		2.3 mm (0.091 in.)	12.2 mm (0.480 in.)	31.5 mm (1.240 in.)	6.6
	4th accumulator spring A		2.4 mm (0.094 in.)	18.6 mm (0.732 in.)	49.0 mm (1.929 in.)	7.1
	2nd accumulator spring B		2.1 mm (0.083 in.)	10.8 mm (0.425 in.)	34.0 mm (1.339 in.)	8.2
	2nd accumulator spring A		2.1 mm (0.083 in.)	16.6 mm (0.654 in.)	48.7 mm (1.917 in.)	8.4
	5th accumulator spring		2.5 mm (0.098 in.)	14.6 mm (0.575 in.)	29.9 mm (1.177 in.)	4.9

Item	Measurement	Qualification	Standard or New	Service Limit
A/T differential carrier	Pinion shaft contact area I.D.		18.000—18.025 mm (0.7087—0.7096 in.)	———
	Clearance between carrier and pinion shaft		0.013—0.054 mm (0.0005—0.0021 in.)	0.1 mm (0.004 in.)
	Driveshaft contact area I.D.		28.021—28.051 mm (1.1032—1.1044 in.)	———
	Clearance between carrier and driveshaft		0.071—0.117 mm (0.0028—0.0046 in.)	0.12 mm (0.005 in.)
	Carrier bearing starting torque (preload)	For new bearing	2.7—3.9 N·m (28—40 kgf·cm, 24—35 lbf·in.)	Adjust
		For used bearing	2.5—3.6 N·m (25—37 kgf·cm, 22—32 lbf·in.)	Adjust
	Final driven gear backlash		0.086—0.142 mm (0.0034—0.0056 in.)	0.2 mm (0.008 in.)
A/T differential pinion gear	Backlash		0.05—0.15 mm (0.002—0.006 in.)	———
	I.D.		18.042—18.066 mm (0.7103—0.7113 in.)	———
	Clearance between pinion gear and pinion shaft		0.055—0.095 mm (0.0022—0.0037 in.)	0.12 mm (0.005 in.)

Steering

Item	Measurement	Qualification	Standard or New
Steering wheel	Rotational play measured at outside edge with engine running		0—10 mm (0—0.39 in.)
	Initial turning load measured at outside edge with engine running		29 N (3.0 kgf, 6.6 lbf)
Gearbox	Angle of rack guide screw loosened from locked position		15±5 °
Pump	Output pressure with shut-off valve closed		8,140—8,830 kPa (83—90 kgf/cm², 1,180—1,280 psi)
Power steering fluid	Capacity Use Honda Power Steering Fluid	Reservoir capacity	0.32 L (0.33 US qt)
		System capacity	1.05 L (1.11 US qt)

Suspension

Item	Measurement	Qualification	Standard or New	Service Limit
Wheel alignment	Camber	Front	0 °00 ′ $^{+30'}_{-45'}$	
		Rear	—1 °00 ′ $^{+30'}_{-45'}$	
	Caster	Front (4-door)	3 °48 ′ $^{+0.25'}_{-1.05'}$	
		Front (2-door)	3 °47 ′ $^{+0.25'}_{-1.05'}$	
	Total toe-in	Front	0±2 mm (0±0.08 in.)	
		Rear	2±2 mm (0.08±0.08 in.)	
	Front wheel turning angle	Inward	39 °00 ′ ±2 °	
		Outward (reference)	31 °50 ′	
Wheel	Aluminum wheel runout	Axial	0—0.7 mm (0—0.03 in.)	2.0 mm (0.08 in.)
		Radial	0—0.7 mm (0—0.03 in.)	1.5 mm (0.06 in.)
	Steel wheel runout	Axial	0—1.0 mm (0—0.04 in.)	2.0 mm (0.08 in.)
		Radial	0—1.0 mm (0—0.04 in.)	1.5 mm (0.06 in.)
Wheel bearing	End play	Front	0—0.05 mm (0—0.002 in.)	
		Rear	0—0.05 mm (0—0.002 in.)	

Standards and Service Limits

Brakes

Item	Measurement	Qualification	Standard or New	Service Limit
Parking brake	Distance traveled when lever pulled with 196 N (20 kgf, 44 lbf) of force		7 to 9 clicks	
Brake pedal	Pedal height (carpet moved aside)	M/T	156 mm (6 1/8 in.)	
		A/T	160 mm (6 5/16 in.)	
	Free play		1—5 mm (1/16—3/16 in.)	
Brake disc	Thickness	Front (NISSIN)	27.9—28.1 mm (1.10—1.11 in.)	26.0 mm (1.02 in.)
		Front (AKEBONO)	22.9—23.1 mm (0.90—0.91 in.)	21.0 mm (0.83 in.)
		Rear	8.9—9.1 mm (0.35—0.36 in.)	8.0 mm (0.31 in.)
	Runout		——	0.04 mm (0.0016 in.)
	Parallelism		——	0.015 mm (0.0006 in.)
Brake pad	Thickness	Front (NISSIN)	10.5—11.2 mm (0.41—0.44 in.)	1.6 mm (0.06 in.)
		Front (AKEBONO)	10.5—10.8 mm (0.41—0.43 in.)	1.6 mm (0.06 in.)
		Rear	8.3—9.0 mm (0.33—0.35 in.)	1.0 mm (0.04 in.)

Air Conditioning

Item	Measurement	Qualification	Standard or New
Refrigerant	Type		HFC-134a (R-134a)
	Capacity of system		400—450 g (14.1—15.9 oz)
Refrigerant oil	Type		DENSO ND-OIL 8 (P/N 38897-PR7-A01AH or 38997-PR7-A01)
	Capacity of components	Condenser	25 mL (5/6 fl·oz)
		Evaporator	35 mL (1 1/5 fl·oz)
		Each line and hose	10 mL (1/3 fl·oz)
		Reserver/Dryer	10 mL (1/3 fl·oz)
		Compressor	70—82 mL (2 3/8—2 7/9 fl·oz)
Compressor	Field coil resistance	At 68 °F (20 °C)	3.9 —4.3 Ω
	Pulley-to-armature-plate clearance		0.35—0.60 mm (0.014—0.024 in.)

Design Specifications

Item	Measurement	Qualification	Specification
DIMENSIONS (4-door)	Overall length		4,930 mm (194.1 in.)
	Overall width		1,847 mm (72.7 in.)
	Overall height		1,475 mm (58.1 in.)
	Wheelbase		2,800 mm (110.2 in.)
	Track	Front (16 inch wheels)	1,580 mm (62.2 in.)
		Front (17 inch wheels)	1,590 mm (62.6 in.)
		Rear (16 inch wheels)	1,580 mm (62.2 in.)
		Rear (17 inch wheels)	1,590 mm (62.6 in.)
	Seating capacity		five (5)
DIMENSIONS (2-door)	Overall length		4,849 mm (190.9 in.)
	Overall width		1,848 mm (72.7 in.)
	Overall height		1,432 mm (56.3 in.)
	Wheelbase		2,740 mm (107.9 in.)
	Track	Front	1,580 mm (62.2 in.)
		Rear	1,580 mm (62.2 in.)
	Seating capacity		five (5)
WEIGHT (4-door)	Gross Vehicle Weight Rating (GVWR) USA models	LX, LX PZEV, LX- P, LX- P PZEV	1,950 kg (4,299 lbs)
		EX, EX-L, EX PZEV, EX-L PZEV	2,010 kg (4,431 lbs)
	Gross Vehicle Weight Rating (GVWR) Canada models	LX, LX-P	1,970 kg (4,343 lbs)
		EX, EX-L	2,030 kg (4,475 lbs)
WEIGHT (2-door)	Gross Vehicle Weight Rating (GVWR) USA models	LX, LX PZEV	1,950 kg (4,299 lbs)
		EX, EX-L, EX PZEV, EX-L PZEV	2,000 kg (4,409 lbs)
	Gross Vehicle Weight Rating (GVWR) Canada models	LX	1,970 kg (4,343 lbs)
		EX, EX-L	2,020 kg (4,453 lbs)
ENGINE	Type		Water cooled, 4-stroke DOHC i- VTEC gasoline engine
	Cylinder arrangement		Inline 4-cylinder, transverse
	Bore and stroke		87 x 99 mm (3.43 x 3.90 in.)
	Displacement		2,354 cm^3 (144 cu in.)
	Compression ratio		10.5
	Valve train		Chain drive, DOHC i-VTEC 4 valves per cylinder
	Lubrication system		Forced, wet sump, with trochoid pump
	Oil pump displacement	At 6,000 rpm	54.3 L (57.4 US qt)/minute
	Water pump displacement	At 6,000 rpm	82 L (87 US qt)/minute
	Fuel required		Regular UNLEADED gasoline with 87 Pump Octane Number or higher
STARTER	Type		Gear reduction
	Normal output		1.6 kW
	Normal voltage		12 V
	Hour rating		30 seconds
	Rotation of direction		Clockwise as viewed from drive end

(cont'd)

Design Specifications

Item	Measurement	Qualification		Specification
CLUTCH	Type			Single plate dry, diaphragm spring
MANUAL TRANSMISSION	Type			Synchronized, five-speed forward, one reverse
	Primary reduction			Direct 1:1
	Gear ratio	1st		3.267
		2nd		1.778
		3rd		1.154
		4th		0.870
		5th		0.647
		Reverse		3.583
	Final reduction	Type		Single helical gear
		Gear ratio		4.389
AUTOMATIC TRANSMISSION	Type			Electronically-controlled automatic, five-speed forward, one reverse, three-element torque converter with lock-up clutch
	Primary reduction			Direct 1:1
	Gear ratio	1st		2.651
		2nd	K24Z2	1.516
			K24Z3	1.613
		3rd	K24Z2	1.037
			K24Z3	1.081
		4th	K24Z2	0.738
			K24Z3	0.772
		5th		0.566
		Reverse		2.000
	Final reduction	Type		Single helical gear
		Gear ratio		4.437
STEERING	Type			Hydraulic power-assisted rack and pinion
	Overall ratio			13.1
	Turns, lock-to-lock			2.56
	Steering wheel diameter			370 mm (14.6 in.)
SUSPENSION	Type	Front		Independent double wishbone, with stabilizer, coil spring
		Rear		Independent multilink with stabilizer, coil spring
	Shock absorber	Front		Telescopic, hydraulic, nitrogen gas-filled
		Rear		Telescopic, hydraulic, nitrogen gas-filled
TIRES	Size (4-door)	Front and rear (LX, LX PZEV, LX-P, LX-P PZEV)		P215/60R16 94H
		Front and rear (EX, EX-L, EX PZEV, EX-L PZEV)		P225/50R17 93V
		Spare		T135/80D16 101M
	Size (2-door)	Front and rear		P225/50R17 93V
		Spare		T135/80D16 101M
WHEEL ALIGNMENT	Camber	Front		0 °00 ′
		Rear		−1 °00 ′
	Caster	Front (4-door)		3 °48 ′
		Front (2-door)		3 °47 ′
	Total toe-in	Front		0 mm (0 in.)
		Rear		2 mm (0.08 in.)
	Front wheel turning angle	Inward		39 °00 ′
		Outward (reference)		31 °50 ′

Item	Measurement	Qualification	Specification
BRAKES	Type of service brake	Front	Power-assisted self-adjusting ventilated disc
		Rear	Power-assisted self-adjusting solid disc
	Type of parking brake		Mechanical actuating, rear wheels
	Pad friction surface area	Front: (NISSIN)	50.6 cm^2 (7.84 sq in.) x 2
		Front: (AKEBONO)	45.7 cm^2 (7.08 sq in.) x 2
		Rear	27.3 cm^2 (4.23 sq in.) x 2
AIR CONDITIONING	Compressor	Type	Swash plate/DENSO
		Capacity	154.4 mL (9.42 cu in.)/rev.
		Maximum speed	8,400 rpm
		Lubricant capacity	70 mL (2 3/8 fl·oz)
		Lubricant type	DENSO ND-OIL 8
	Condenser	Type	Corrugated fin
	Evaporator	Type	Corrugated fin
	Blower	Type	Stabilizer swirling flow
		Motor type	216 W/12 V
		Speed control	Infinitely variable
		Maximum capacity	505 m^3 (17,834 cu ft)/h
	Temperature control		Air-mix type
	Compressor clutch	Type	Dry, single plate, poly V-belt drive
		Electrical power consumption at 68 °F (20 °C)	35 W maximum at 12 V
	Refrigerant	Type	HFC-134a (R-134a)
		Capacity	400—450 g (14.1—15.9 oz)

HONDA

(cont'd)

Design Specifications

Item	Measurement	Qualification	Specification
ELECTRICAL RATINGS	Battery	All models except PZEV	12 V—47 Ah/20 HR (12 V—38 Ah/5 HR)
		PZEV	12 V—65 Ah/20 HR (12 V—52 Ah/5 HR)
	Fuse	Under-hood fuse/relay box	100 A, 60 A*, 50 A, 40 A, 30 A, 20 A, 15 A, 7.5 A
		Driver's under-dash fuse/relay box	20 A, 15 A, 10 A, 7.5 A
		Passenger's under-dash fuse/relay box	20 A, 15 A, 10 A, 7.5 A
	Light bulbs	Headlight high beam	12 V—60 W
		Headlight low beam (4-door)	12 V—51 W
		Headlight low beam (2-door)	12 V—55 W
		Front turn signal/parking lights (4-door)	12 V—21/5 W
		Front turn signal/parking lights (2-door)	12 V—24 CP/2.2 CP
		Front side marker light (4-door)	12 V—3 CP
		Front side marker light (2-door)	12 V—5 W
		Rear turn signal lights	12 V—21 W
		Brake/taillights	12 V—21 W/5 W
		High mount brake light	12 V—21 W
		Back-up lights (4-door)	12 V—21 W
		Back-up lights (2-door)	12 V—21 W
		License plate lights	12 V—5 W
		Ceiling light	12 V—8 W
		Trunk light	12 V—5 W
		Front map light	12 V—8 W
		Ambient light	LED
		Vanity mirror lights	12 V—1.1 W
		Glove box light	12 V—2 CP
		Door courtesy light	12 V—2 CP
		Gauge lights	LED
		Indicator lights	LED
	Washer reservoir	Capacity (4-door USA models)	2.5 L (2.64 US qt)
		Capacity (All 2-door models and 4-door Canada models)	4.5 L (4.75 US qt)

*: Except LX, LX PZEV

Body Specifications

4-door:

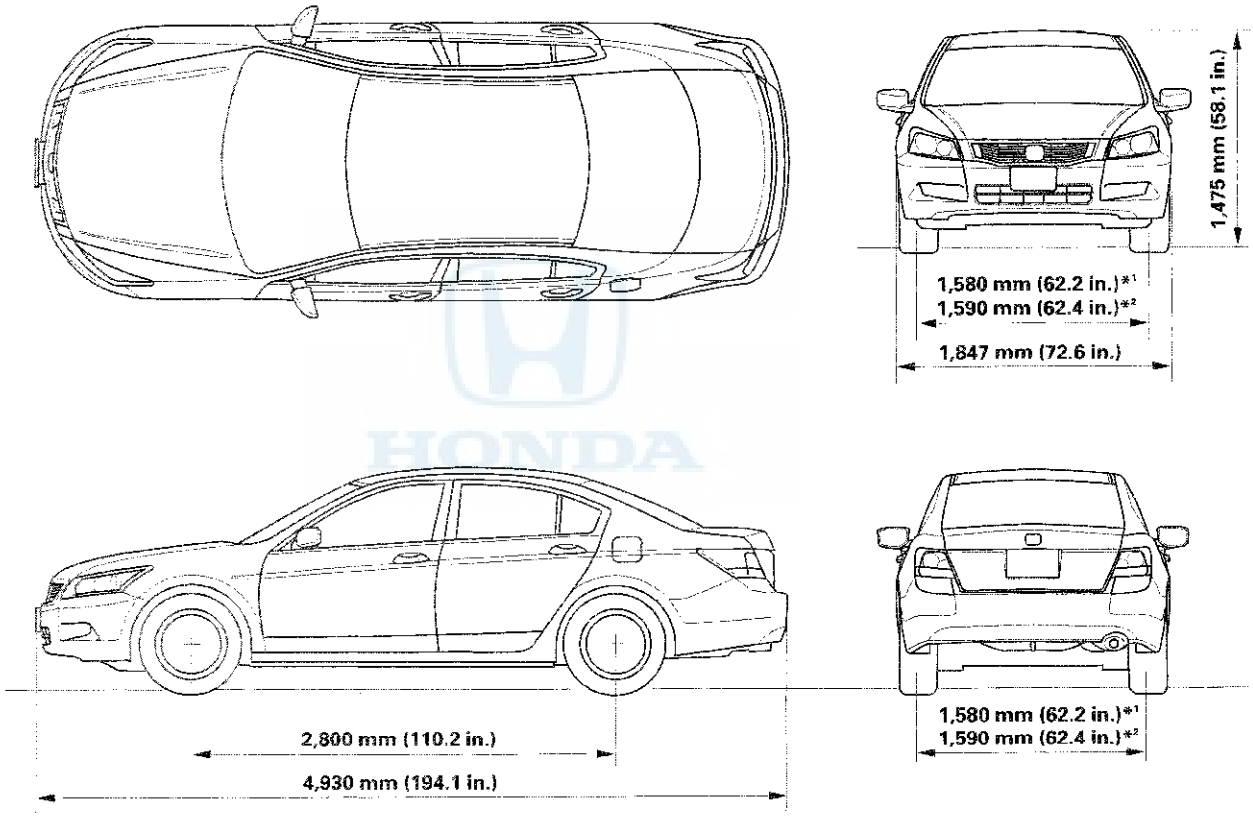

*1: 16 inch wheels
*2: 17 inch wheels

(cont'd)

Body Specifications (cont'd)

2-door:

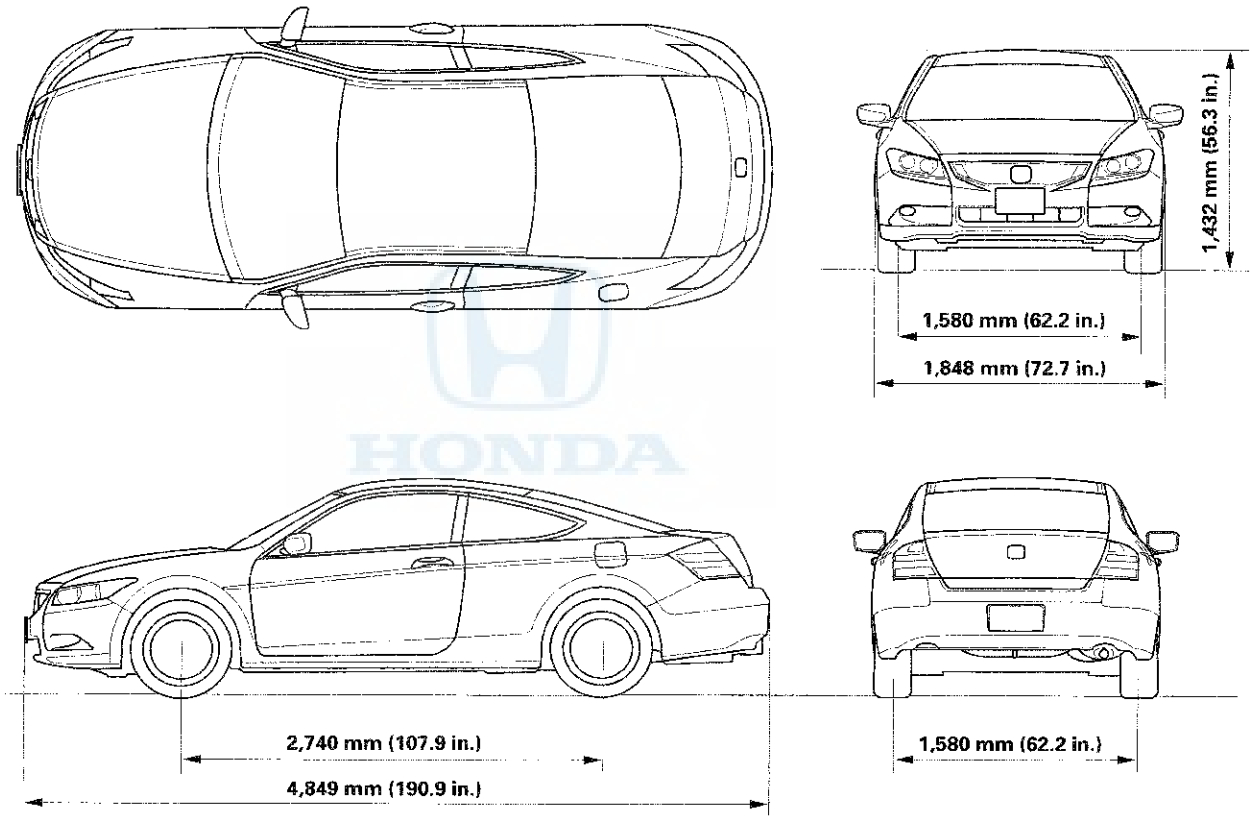

Navigation Tools: Click on the “Table of Contents” below, or use the Bookmarks to the left.

Maintenance

Lubricants and Fluids **3-2**

Maintenance Minder

General Information 3-4
Maintenance Main Items 3-7
Maintenance Sub Items 3-8

Lubricants and Fluids

For details of the lubrication points and the type of lubricants to be applied, refer to the illustrated index and the various work procedures (such as Assembly/Reassembly, Replacement, Overhaul, Installation, etc.) contained in each section.

	Application	Lubricant of Fluid
A	Engine	Honda Motor Oil: American Honda P/N 08798-9023 (5W-20) Honda Canada P/N CA66806 (5W-20) Look for the API certification seal on the oil container. Make sure it says "For Gasoline Engine." SAE Viscosity: See chart.
B	Manual Transmission	Honda Manual Transmission Fluid (MTF): American Honda P/N 08798-9031 Honda Canada P/N 08798-9031C Always use Honda MTF. Using motor oil can cause stiffer shifting because it does not contain the proper additives.
	Automatic Transmission	Honda Automatic Transmission Fluid (ATF-Z1): American Honda P/N 08200-9001 Honda Canada P/N CA66689 Always use Honda ATF-Z1. Using a non-Honda ATF can affect shift quality.
C	Brake system (including VSA lines)	Honda DOT 3 Brake fluid: P/N 08798-9008
D	Clutch system (manual transmission)	Always use Honda DOT 3 Brake Fluid. Using a non-Honda brake fluid can cause corrosion and decrease the life of the system.
E	Shift lever (manual transmission)	Super High Temp Urea Grease: P/N 08798-9002
F	Brake booster clevis pin	Multipurpose grease
G	Clutch master cylinder clevis pin (manual transmission)	
H	Release fork (manual transmission)	
I	Battery terminals	
J	Hood hinges and hood latch	
K	Fuel fill door	
L	Trunk hinges	
M	Shift cable ends (manual transmission)	Honda Silicone Grease: P/N 08C30-B0234M
N	Caliper piston boots, caliper pins, and boots	
O	Power steering system	Honda Power Steering Fluid: American Honda P/N 08206-9002 Honda Canada P/N 08206-9002C Always use Honda Power Steering Fluid. Using any other type of power steering fluid or automatic transmission fluid can cause increased wear and poor steering in cold weather.
P	Air conditioning compressor	Compressor oil: DENSO ND-OIL 8 (P/N 38897-PR7-A01AH or 38899-PR7-A01) for refrigerant HFC-134a (R-134a)
Q	Coolant system	Honda Long Life Antifreeze/Coolant-Type 2: P/N OL999-9011 Honda Extreme Cold Weather Antifreeze/Coolant Type 2: P/N OL999-9020

API CERTIFICATION SEAL

Recommended Engine Oil
Engine oil viscosity for ambient temperature ranges

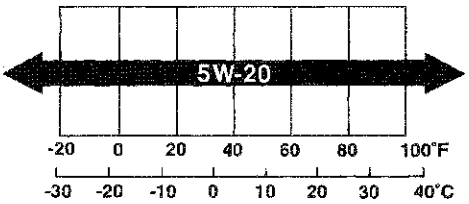

NOTE:
- Lubricate the following areas using the recommended lubricants and fluids.
- In corrosive areas, more frequent lubrication is necessary.

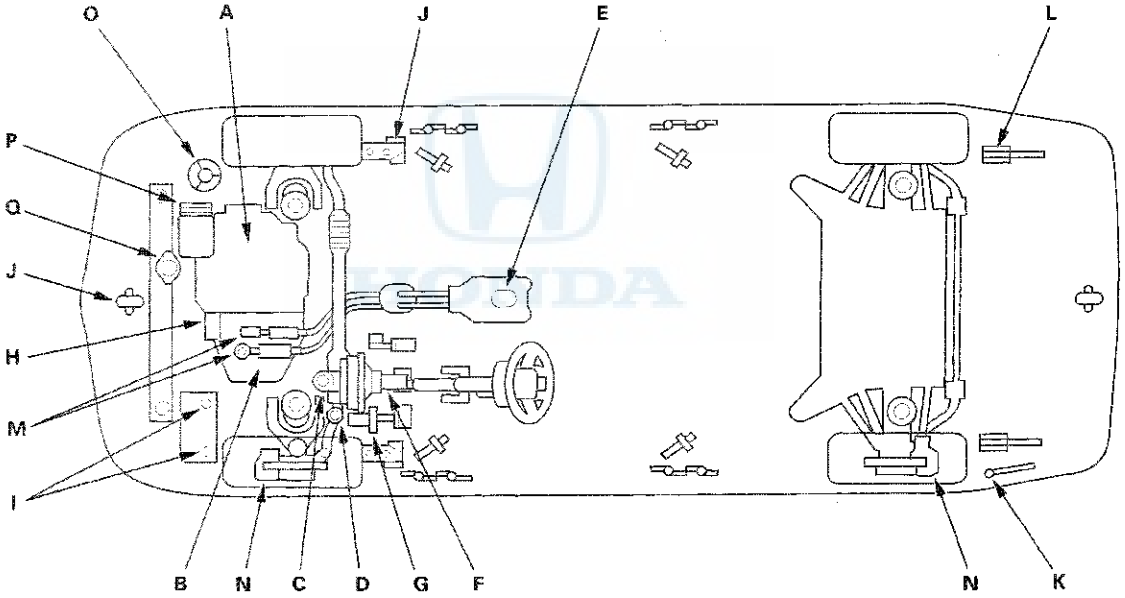

Maintenance Minder

General Information

Maintenance Display

The maintenance minder is an important feature of the information display. Based on engine and transmission operating conditions, the Accord's onboard computer (ECM/PCM) calculates the remaining engine oil and the transmission fluid life. The system also displays the remaining engine oil life along with the codes for other scheduled maintenance items needing service.

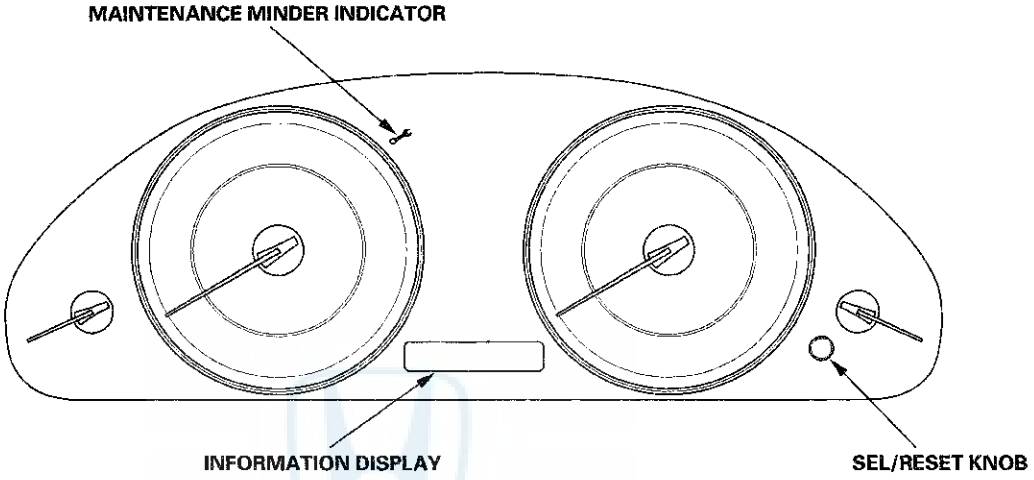

Service Information

1. The remaining engine oil life on the engine oil life indicator (A) is displayed as a percentage on the information display. To see the current engine oil life, turn the ignition switch to ON (II), then push and release the Select/Reset knob repeatedly until the engine oil life is displayed.

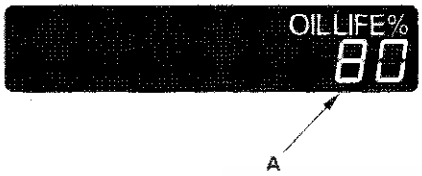

2. When the remaining engine oil life is 6 % to 15 %, the engine oil life indicator will be displayed for several seconds when the ignition switch is ON (II). The maintenance minder indicator (A) will also come on, and the maintenance item code(s) for other scheduled maintenance items needing service will appear in the information display.

   - Complete list of maintenance main items (B) (see page 3-7).
   - Complete list of maintenance sub items (C) (see page 3-8).

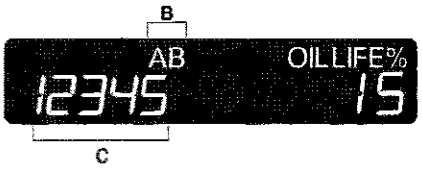

3. When the remaining engine oil life is 1 % to 5 %, the maintenance message "SERVICE" (A) appears along with the same maintenance item code(s), when the ignition switch is ON (II).

4. When the remaining engine oil life is 0 %, the engine oil life indicator blinks.
   This display comes on when the ignition switch is ON (II). At this point, the indicated maintenance must be done as soon as possible.

5. If the indicated maintenance is not done, the engine oil life indicator shows a negative mileage, for example "−10" blinking on the display. A negative mileage will display after the vehicle is driven 10 miles (for USA models) or 10 km (for Canada models) after the display begins to blink.
   This means that the indicated maintenance item should have been done 10 miles (for USA models) or 10 km (for Canada models) ago.

(cont'd)

General Information (cont'd)

Resetting the Maintenance Information Display

NOTE:
- The vehicle must be stopped to reset.
- If the required service is done and the display is not reset, or if the display is reset without doing the service, the system will not show the proper maintenance timing. This can lead to serious mechanical problems because there will be no record of when maintenance is needed.

1. Turn the ignition switch ON (II).
2. If oil life is more than 15 %, press the Select/Reset knob repeatedly until the engine oil life is displayed.
3. Press the Select/Reset knob for about 10 seconds. The engine oil life and the maintenance item code(s) will blink.

   NOTE: If you are resetting the display when the engine oil life is more than 15 %, make sure the maintenance items requiring service have been done before resetting this display.
4. Press the Select/Reset knob for another 5 seconds. The maintenance item code(s) will disappear and the engine oil life will reset to "100."

Resetting Individual Maintenance Items

1. Connect the Honda Diagnostic System (HDS) to the data link connector (DLC) (see step 2 on page 11-3).
2. Turn the ignition switch to ON (II).
3. Make sure the HDS communicates with the vehicle and the engine control module/powertrain control module (ECM/PCM). If it doesn't communicate, troubleshoot the DLC circuit (see page 11-192).
4. Select GAUGES in the BODY ELECTRICAL with the HDS.
5. Select ADJUSTMENT in the GAUGES with the HDS.
6. Select SERVICE REMINDER in the ADJUSTMENT with the HDS.
7. Select RESET in the SERVICE REMINDER with the HDS.
8. Select the individual maintenance item you wish to reset.

Maintenance Main Items

If message "SERVICE" does not appear more than 12 months after the display is reset, change the engine oil every year.

NOTE:
- Independent of the maintenance messages in the smart maintenance display, replace the brake fluid every 3 years.
- Inspect idle speed every 160,000 miles (256,000 km).
- Adjust the valves during services A, B, 1, 2, or 3 if they are noisy.

Symbol	Maintenance Main Items
A	Replace engine oil (see page 8-9). Engine oil capacity without oil filter: 4.0 L (4.2 US qt).
B	Replace engine oil and oil filter (see page 8-10). Engine oil capacity with oil filter: 4.2 L (4.4 US qt).
	Check front and rear brakes (see page 19-3). • Check pads and discs for wear (thickness), damage, and cracks. • Check calipers for damage, leaks, and tightness of mounting bolts.
	Check parking brake adjustment (see page 19-7). Check the number of clicks (7 to 9) when the parking brake lever is pulled with 196 N (20 kgf, 44 lbf) of force.
	Inspect tie-rod ends, steering gearbox, and gearbox boots (see page 17-3). • Check steering linkage. • Check boots for damage and leaking grease. • Check fluid lines for damage or leaks.
	Inspect suspension components (see page 18-3). • Check bolts for tightness. • Check condition of ball joint boots for deterioration and damage.
	Inspect driveshaft boots (see page 16-4). Check boots for cracks and boot bands for tightness.
	Inspect brake hoses and lines including VSA lines (see page 19-38). Check the master cylinder and VSA modulator-control unit for damage and leakage.
	Inspect all fluid levels and condition of fluids. • Engine coolant (see page 10-6) • Clutch fluid (see step 2 on page 12-6) • Manual transmission fluid (see page 13-5) • Automatic transmission fluid (see page 14-230) • Power steering fluid (see page 17-14) • Brake fluid (see page 19-9) • Windshield washer fluid (see page 22-296)
	Inspect exhaust system* (see page 9-8). Check catalytic converter heat shields, exhaust pipes, and muffler for damage, leaks, and tightness.
	Inspect fuel lines (see page 11-336) and connections* (see page 11-339). Check for loose connections, cracks, and deterioration; retighten loose connections and replace damaged parts.

NOTE: According to state and federal regulations, failure to do the maintenance items marked with an asterisk (*) will not void the customer's emissions warranties. However, Honda recommends that all maintenance services be done at the recommended interval, to ensure long-term reliability.

Maintenance Minder

Maintenance Sub Items

Number	Maintenance Sub Items
1	Rotate tires, and check tire inflation and condition. Follow the pattern shown in the Owner's Manual.
2	Replace air cleaner element (see page 11-360). If the vehicle is driven primarily in dusty conditions, replace every 15,000 miles (24,000 km).
	Replace dust and pollen filter (see page 21-77). • If the vehicle is driven mostly in areas that have high concentrations of dust, pollen, or soot in the air, replace every 15,000 miles (24,000 km). • Replace the filter whenever airflow from the heating and air conditioning system is less than normal.
	Inspect drive belt (see page 4-29). Look for cracks and damage, then check the position of the drive belt auto-tensioner indicator.
3	Replace manual transmission fluid (see page 13-5) Capacity: 1.9 L (2.0 US qt); use Honda MTF.
	Replace automatic transmission fluid (see page 14-231) • Capacity: 2.5 L (2.6 US qt); use Honda ATF-Z1. • Driving in mountainous areas at very low vehicle speeds results in higher transmission temperatures. This requires transmission fluid changes more frequently than recommended by the maintenance minder. If the vehicle is regularly driven under these conditions, change the transmission fluid at 60,000 miles (100,000 km), then every 30,000 miles (48,000 km).
4	Replace spark plugs (see page 4-20). • Use ILZKR7B-11S (NGK) or SXU22HCR11S (DENSO) for all models except PZEV. • Use DILZKR7A11GS (NGK) for PZEV.
	Inspect valve clearance (cold) (see page 6-9). Intake: 0.21—0.25 mm (0.008—0.010 in.), Exhaust: 0.25—0.29 mm (0.010—0.011 in.).
5	Replace engine coolant (see page 10-6). Capacity (including reservoir/DENSO): • M/T 6.1 L (1.61 US gal) • A/T 6.0 L (1.59 US gal) Capacity (including reservoir/TRAD): • M/T 6.0 L (1.59 US gal) • A/T 5.9 L (1.56 US gal) Use Honda Long Life Antifreeze/Coolant Type 2, and add Honda Extreme Cold Weather Antifreeze/Coolant Type 2 in severe cold temperature.

SUPPLEMENTAL RESTRAINT SYSTEM (SRS) (If engine electrical maintenance is required)

The Accord SRS includes a driver's airbag in the steering wheel hub, a passenger's airbag in the dashboard above the glove box, seat belt tensioners in the front seat belt retractors, side curtain airbags in the sides of the roof, and side airbags in the front seat-backs. Information necessary to safely service the SRS is included in this Service Manual. Items marked with an asterisk (*) on the contents page include or are located near SRS components. Servicing, disassembling, or replacing these items requires special precautions and tools, and should be done by an authorized Honda dealer.

- To avoid rendering the SRS inoperative, which could lead to personal injury or death in the event of a severe frontal or side collision, all SRS service work should be done by an authorized Honda dealer.
- Improper service procedures, including incorrect removal and installation of the SRS, could lead to personal injury caused by unintentional deployment of the airbags, side airbags, and/or side curtain airbags.
- Do not bump or impact the SRS unit, front impact sensors, side impact sensors, or rear safing sensor when the ignition switch is in ON (II), or for at least 3 minutes after the ignition switch is turned to LOCK (0); otherwise, the system may fail in a collision, or the airbags may deploy.
- SRS electrical connectors are identified by yellow color coding. Related components are located in the steering column, front console, dashboard, dashboard lower panel, in the dashboard above the glove box, in the front seats, in the roof side, and around the floor. Do not use electrical test equipment on these circuits.

Navigation Tools: Click on the “Table of Contents” below, or use the Bookmarks to the left.

Engine Electrical

Engine Electrical
Special Tools 4-2

Starting System
Component Location Index 4-3
Symptom Troubleshooting Index 4-4
Circuit Diagram 4-5
Starter System Circuit Troubleshooting 4-7
Clutch Interlock Switch Test ... 4-9
Starter Performance Test 4-10
Starter Removal and Installation 4-11
Starter Overhaul 4-12

Ignition System
Component Location Index 4-17
Circuit Diagram 4-18
Ignition Timing Inspection 4-19
Ignition Coil Removal/ Installation 4-20
Spark Plug Inspection 4-20

Charging System
Component Location Index 4-22
Symptom Troubleshooting Index 4-23
Circuit Diagram 4-24
Charging System Indicator Circuit Troubleshooting 4-25
Alternator and Regulator Circuit Troubleshooting 4-27
Alternator Control Circuit Troubleshooting 4-28
Drive Belt Inspection 4-29
Drive Belt Removal/ Installation 4-30
Drive Belt Auto-tensioner Inspection 4-30
Drive Belt Auto-tensioner Removal/Installation 4-31
Tensioner Pulley Replacement 4-32
Alternator Removal and Installation 4-32
Alternator Overhaul 4-34

Cruise Control
Component Location Index 4-39
Symptom Troubleshooting Index 4-40
Circuit Diagram 4-42
Cruise Control Input Test 4-43
* Cruise Control Combination Switch Test/Replacement 4-45
Clutch Pedal Position Switch Test 4-45

Engine Mount Control System
Component Location Index 4-46
Circuit Diagram 4-47
Troubleshooting 4-48

Special Tools

Ref. No.	Tool Number	Description	Qty
①	07746-0010300	Attachment, 42 x 47 mm	1
②	07749-0010000	Driver	1

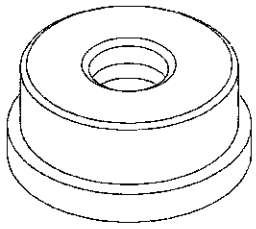

①

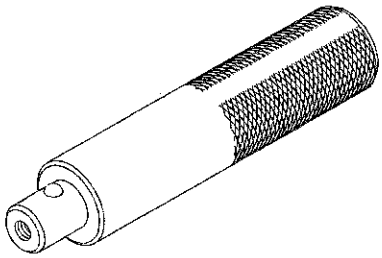

②

Starting System

Component Location Index

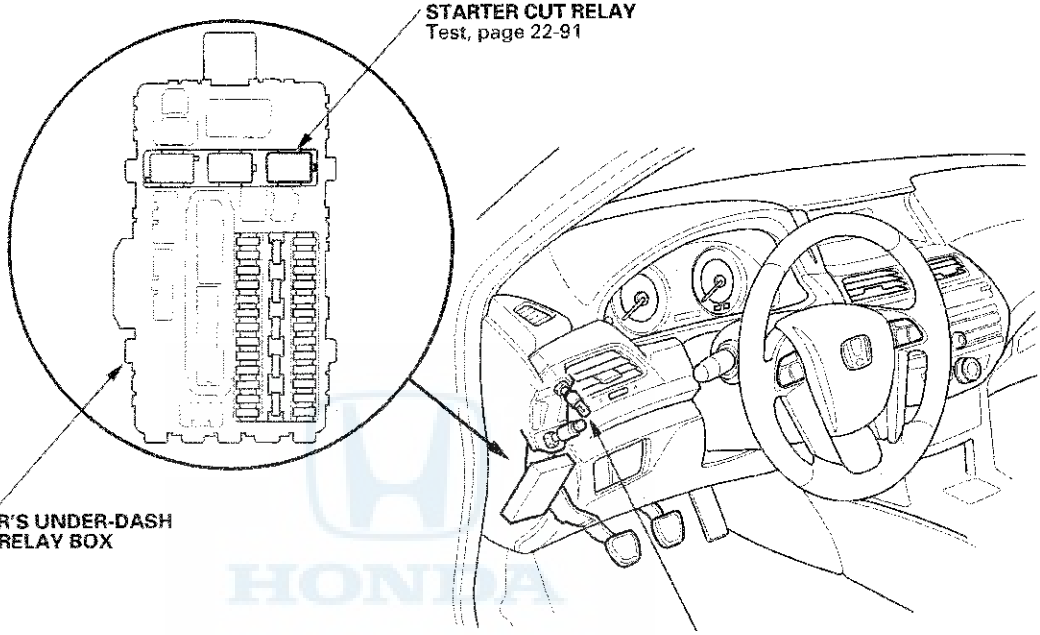

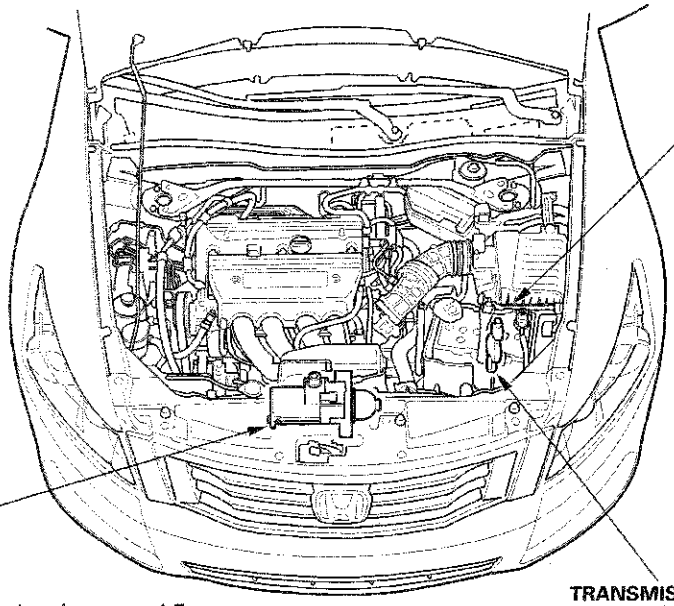

Starting System

Symptom Troubleshooting Index

Symptom	Diagnostic procedure	Also check for
Engine does not start (does not crank)	1. Check for loose battery terminals or connections. 2. Test the battery for a low state of charge (see page 22-88). 3. Check the PGM-FI main relays (see page 22-91). 4. Check the starter (see page 4-7). 5. Check the starter cut relay (see page 22-91). 6. Check the transmission range switch (A/T model) (see page 14-278). 7. Check the clutch interlock switch (M/T model) (see page 4-9). 8. Check the ignition switch or wire (see page 22-94).	Poor ground at G101 (A/T model) or G302 (M/T model)
Engine cranks, but does not start	1. Check for PGM-FI DTCs (see page 11-3). 2. Check for IMMOBI status and function (see page 22-396). 3. Check the fuel pressure (see page 11-335). 4. Check for a plugged or damaged fuel line (see page 11-336). 5. Check for a plugged fuel filter (see page 11-350). 6. Check the throttle body (see page 11-362). 7. Check for low engine compression: • All models except PZEV (see page 6-6) • PZEV model (see page 6-54) 8. Check for a damaged or broken cam chain. 9. Do the engine control module (ECM)/powertrain control module (PCM) reset in the PGM-FI INSPECTION menu to cancel the ALL INJECTORS STOP with the Honda Diagnostic System (HDS).	
Engine is hard to start	1. Check for PGM-FI DTCs (see page 11-3). 2. Check the fuel pressure (see page 11-335). 3. Check for a plugged or damaged fuel line (see page 11-336). 4. Check for a plugged fuel filter (see page 11-350).	
Engine cranks slowly	1. Check for loose battery terminals or connections. 2. Test the battery for a low state of charge (see page 22-88). 3. Check the starter for binding (see page 4-12). 4. Check for excessive drag in the engine.	

Circuit Diagram

M/T model

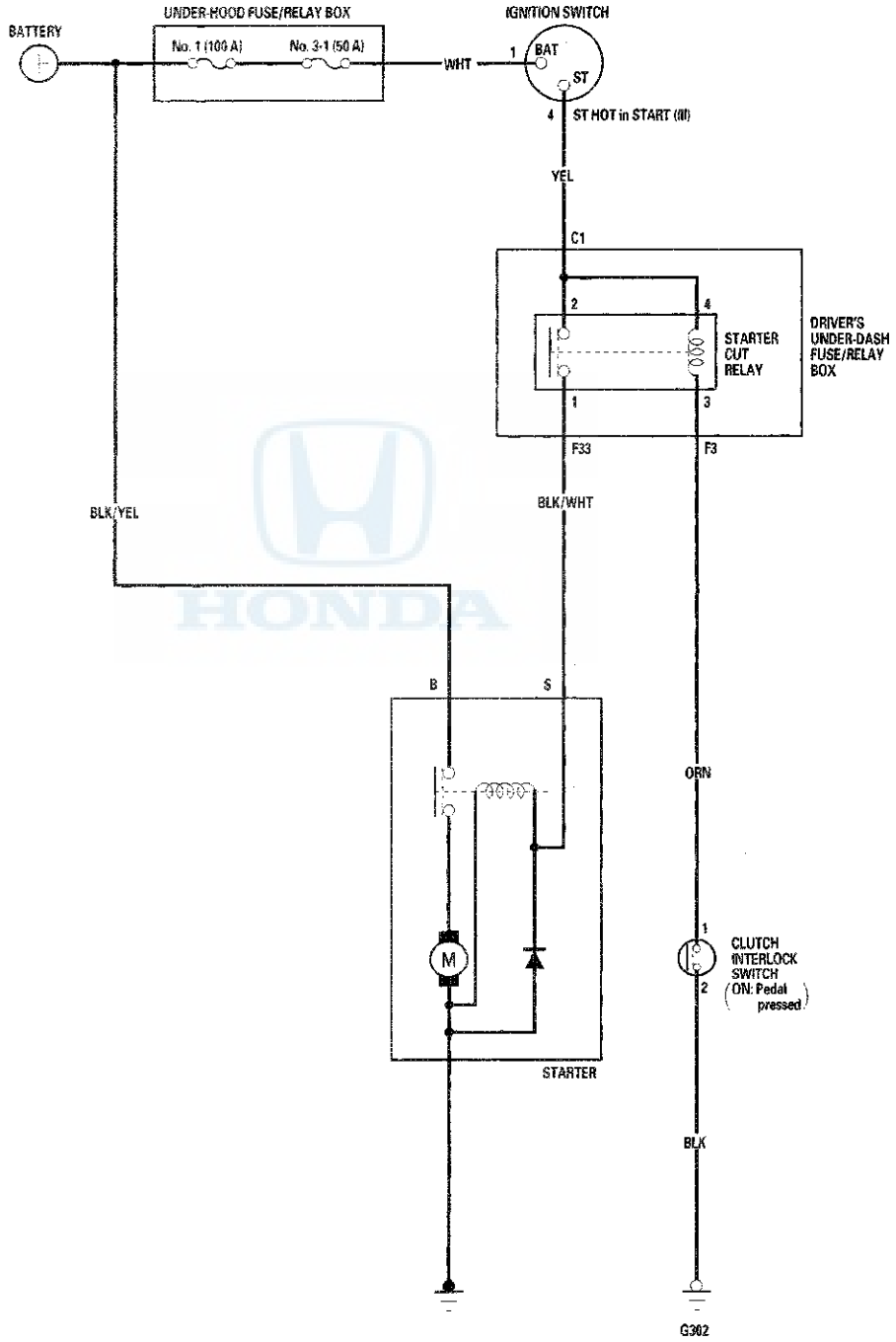

Circuit Diagram (cont'd)

A/T model

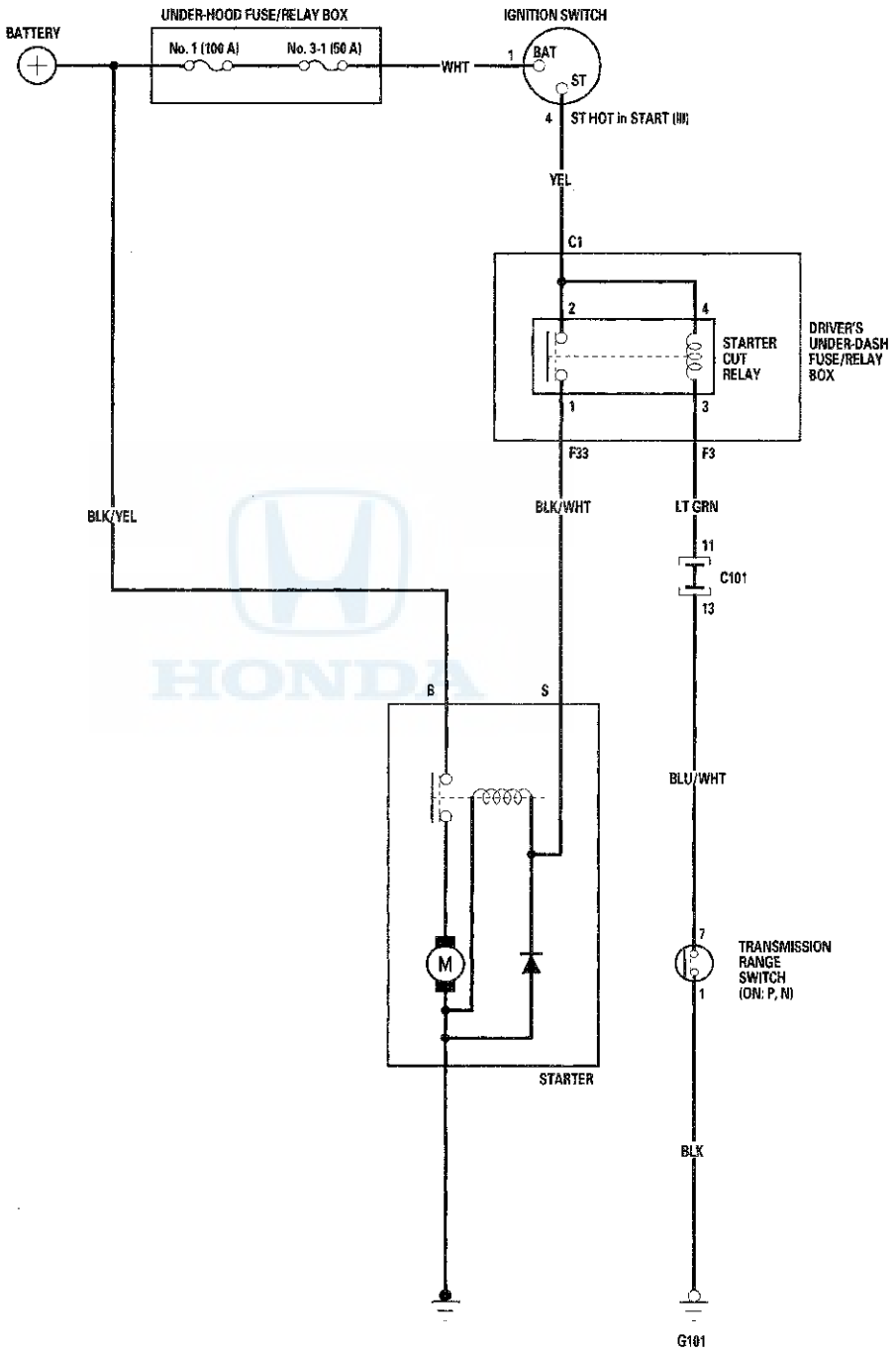

Starter System Circuit Troubleshooting

Special Tools Required
Alternator, Regulator, Battery & Starter tester OTC3131
Available through the Honda Tool and Equipment Program 888-424-6857

NOTE:
- Air temperature must be within 59—100 °F (15—38 °C) during this procedure.
- After this inspection, you must reset the engine control module (ECM)/powertrain control module (PCM). Otherwise, the ECM/PCM will continue to stop the fuel injectors from operating.
- The battery must be in good condition and fully charged.

1. Connect the alternator, regulator, battery & starter tester (OTC3131) to the battery as shown.

   NOTE: The probe is not used for battery testing.

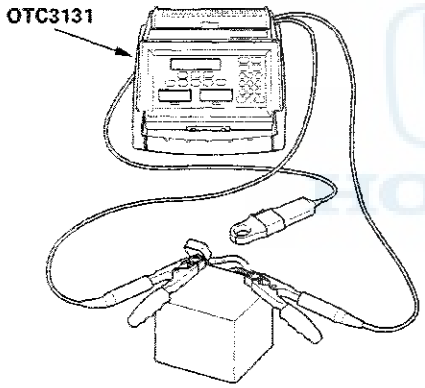

2. Do the BATTERY TEST.

   Does the display indicate GOOD or GOOD, LOW CHARGE?

   YES—The battery is OK. Go to step 3.

   NO—If the display indicates BAD BATTERY, replace the battery, then retest. If the display indicates CHARGE & RETEST, charge the battery, then retest.

3. Connect the Honda Diagnostic System (HDS) to the data link connector (DLC) (see step 2 on page 11-3).

4. Turn the ignition switch to ON (II).

5. Make sure the HDS communicates with the vehicle and the ECM/PCM. If it does not communicate, troubleshoot the DLC circuit (see page 11-192).

6. Select ALL INJECTORS STOP in the PGM-FI INSPECTION menu with the HDS.

7. Set the parking brake, then with the shift lever in N or P (A/T model) or the clutch pedal pressed (M/T model), turn the ignition switch to START (III).

   Does the starter crank the engine normally?

   YES—The starting system is OK. Go to step 14.

   NO—Go to step 8.

8. Turn the ignition switch to LOCK (0).

9. Check the electrical connections at the battery, the negative battery cable to the body, the engine ground cables, and the starter for looseness and corrosion. Then try cranking the engine again.

   Does the starter crank the engine normally?

   YES—Repairing the loose connection corrected the problem. The starting system is OK. Go to step 14.

   NO—Based on the following symptoms, take the appropriate action:■

   - If the starter does not crank the engine at all, go to step 10.
   - If the starter cranks the engine erratically or too slowly, go to step 12.
   - If the starter does not disengage from the flywheel ring gear (M/T model) or torque converter ring gear (A/T model) when you release the key, replace the starter, or remove and disassemble it, and check for the following:
     - Starter solenoid and switch malfunction
     - Dirty drive gear or damaged overrunning clutch

(cont'd)

Starter System Circuit Troubleshooting (cont'd)

10. Make sure the shift lever is in N or P (A/T model) or neutral (M/T model), then disconnect the engine wire harness 1P connector (A). Connect a jumper wire from the battery positive terminal to the starter subharness 1P connector (B).

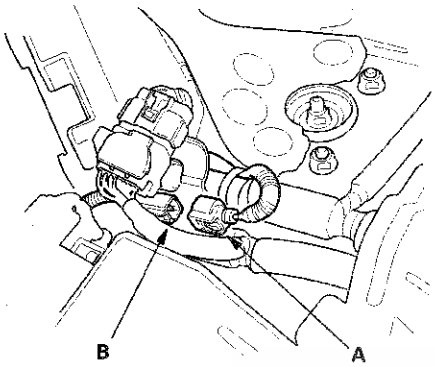

Does the starter crank the engine?

YES—Go to step 11.

NO—Check the starter subharness. If the wire is OK, remove the starter (see page 4-11), then repair or replace (see page 4-12) it as necessary. ■

11. Check the following items in the order listed until you will find the problem circuit:

NOTE: After the open circuit or high resistance in the circuit is found and repaired, go to step 14.

- Check for an open or short in the YEL wire and connectors between the driver's under-dash fuse/relay box and the ignition switch.
- Check for an open or short in the BLK/WHT wire and connectors between the driver's under-dash fuse/relay box and the engine wire harness 1P connector.
- Check for an open or short in the ORN wire and connectors between the driver's under-dash fuse/relay box and the clutch interlock switch (M/T model).
- Check for an open or short in the LT GRN wire, BLU/WHT wire and connectors between the driver's under-dash fuse/relay box and the transmission range switch (A/T model).
- Check for poor ground at G302 (M/T model) or G101 (A/T model).
- Check for a faulty ignition switch (see page 22-94).
- Check for a faulty clutch interlock switch (M/T model) (see page 4-9).
- Check for a faulty transmission range switch (A/T model) (see page 14-278).
- Check for a faulty starter cut relay (see page 22-91).

12. Do the STARTING TEST with the alternator, regulator, battery & starter tester.

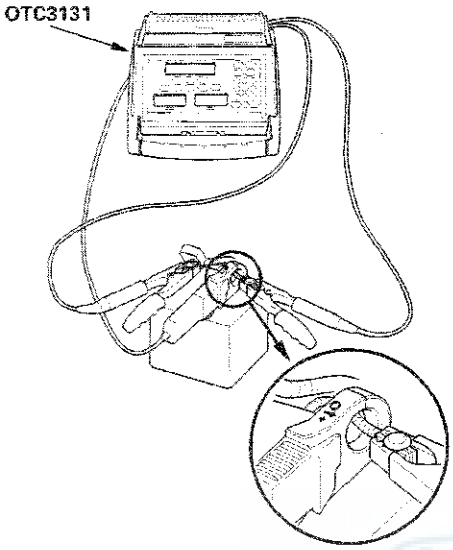

Does the display indicate cranking voltage greater than or equal to 8.5 V (M/T model)/7.7 V (A/T model) and is the current draw less than or equal to 380 A (M/T model)/400 A (A/T model)?

YES—Go to step 13.

NO—Replace the starter, or remove and disassemble it, and check for these problems:■

- Drag in the starter armature
- Short in the armature winding
- Excessive drag in the engine
- Open circuit in starter armature commutator segments
- Excessively worn starter brushes
- Open circuit in the starter brushes
- Dirty or damaged helical splines or drive gear
- Faulty overrunning clutch

13. Remove the starter, and inspect its drive gear and the flywheel ring gear (M/T model) or the torque converter ring gear (A/T model) for damage. Replace any damaged parts.

14. Select ECM/PCM reset (see page 11-4) in the PGM-FI INSPECTION menu to cancel ALL INJECTORS STOP with the HDS.

Clutch Interlock Switch Test

M/T model

1. Disconnect the clutch interlock switch 2P connector (A).

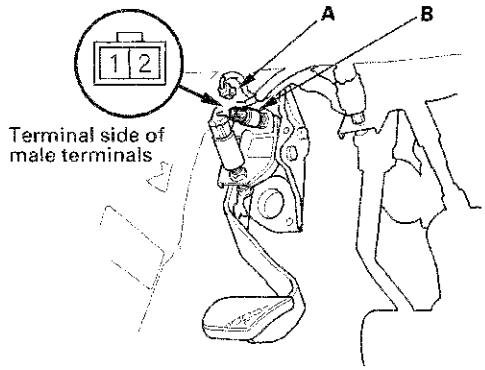

2. Remove the clutch interlock switch (B).

3. Check for continuity between the terminals according to the table.

   - If the continuity is not as specified, replace the clutch interlock switch (see page 12-9).
   - If OK, install the clutch interlock switch and adjust the pedal height (see page 12-7).

Position \ Terminal	1	2
Clutch Interlock Switch (PRESSED)	○	○
Clutch Interlock Switch (RELEASED)		

Starter Performance Test

1. Remove the starter (see page 4-11).

2. Make the connections for this test using the thickest (gauge) wire possible (preferably the same gauge as used on the vehicle).

   NOTE: To avoid damaging the starter, never leave the battery connected for more than 10 seconds.

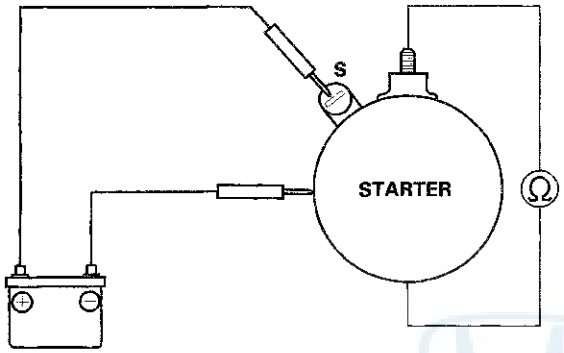

3. Connect the battery as shown. If you hear the operation sound of the starter, it is working properly.

4. Disconnect the battery from the starter body. If you do not hear the operation sound of the starter, it is working properly.

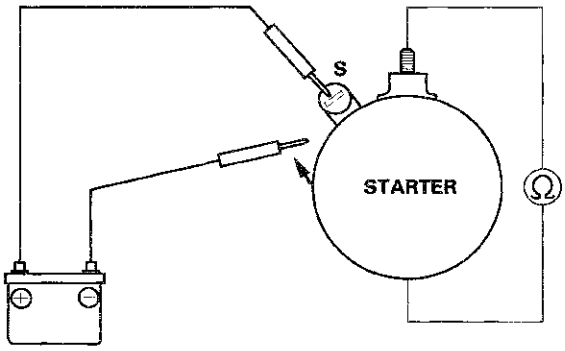

5. Firmly clamp the starter in a vise.

6. Connect the starter to the battery as shown, and confirm that the motor runs.

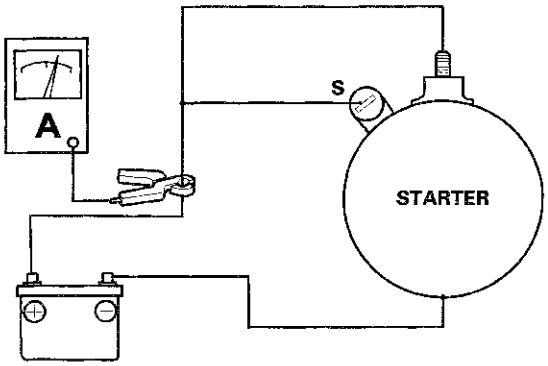

7. If the electric current meets the specification when the battery voltage is at 11.5 V, the starter is working properly.

   Specification
   Electric Current: 80 A or less

Starter Removal and Installation

Removal

1. Do the battery removal procedure (see page 22-90).
2. Remove the intake manifold (see page 9-3).
3. Disconnect the positive starter cable (A) and the S terminal connector (B).

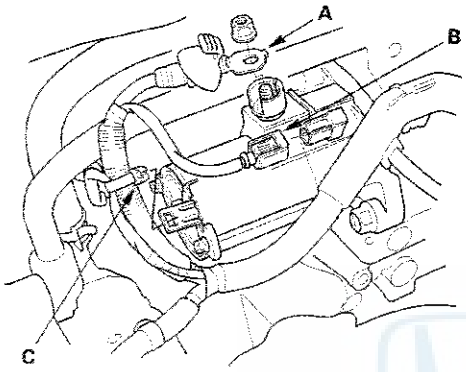

4. Remove the harness clamp (C).
5. Remove the two bolts (A) securing the starter, then remove the starter.

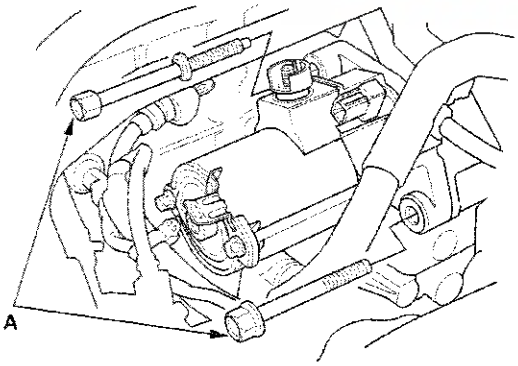

Installation

1. Install the starter, then tighten the two bolts.

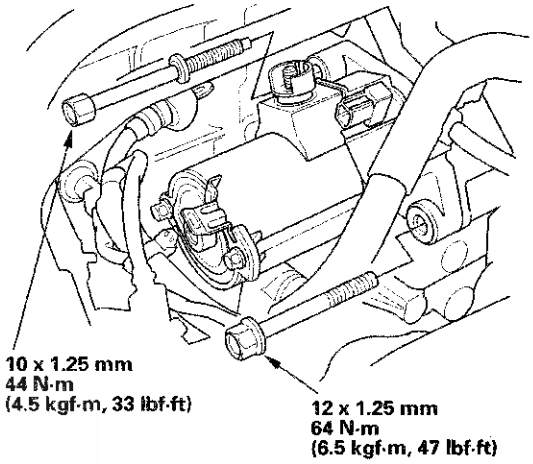

2. Install the harness clamp (A).

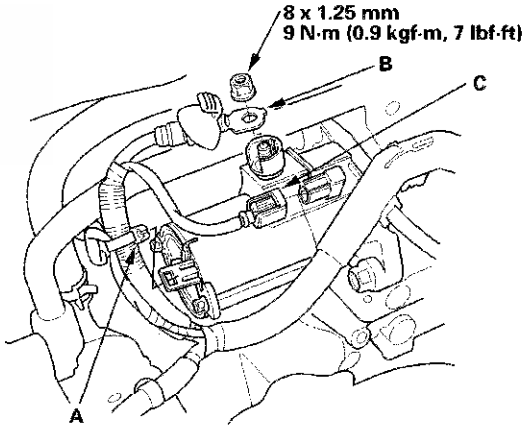

3. Connect the positive starter cable (B) and the S terminal connector (C). Make sure the crimped side of the ring terminal faces away from the starter when you connect it.
4. Install the intake manifold (see page 9-5).
5. Do the battery installation procedure (see page 22-90).
6. Start the engine to make sure the starter works properly.

Starter Overhaul

Disassembly/Reassembly

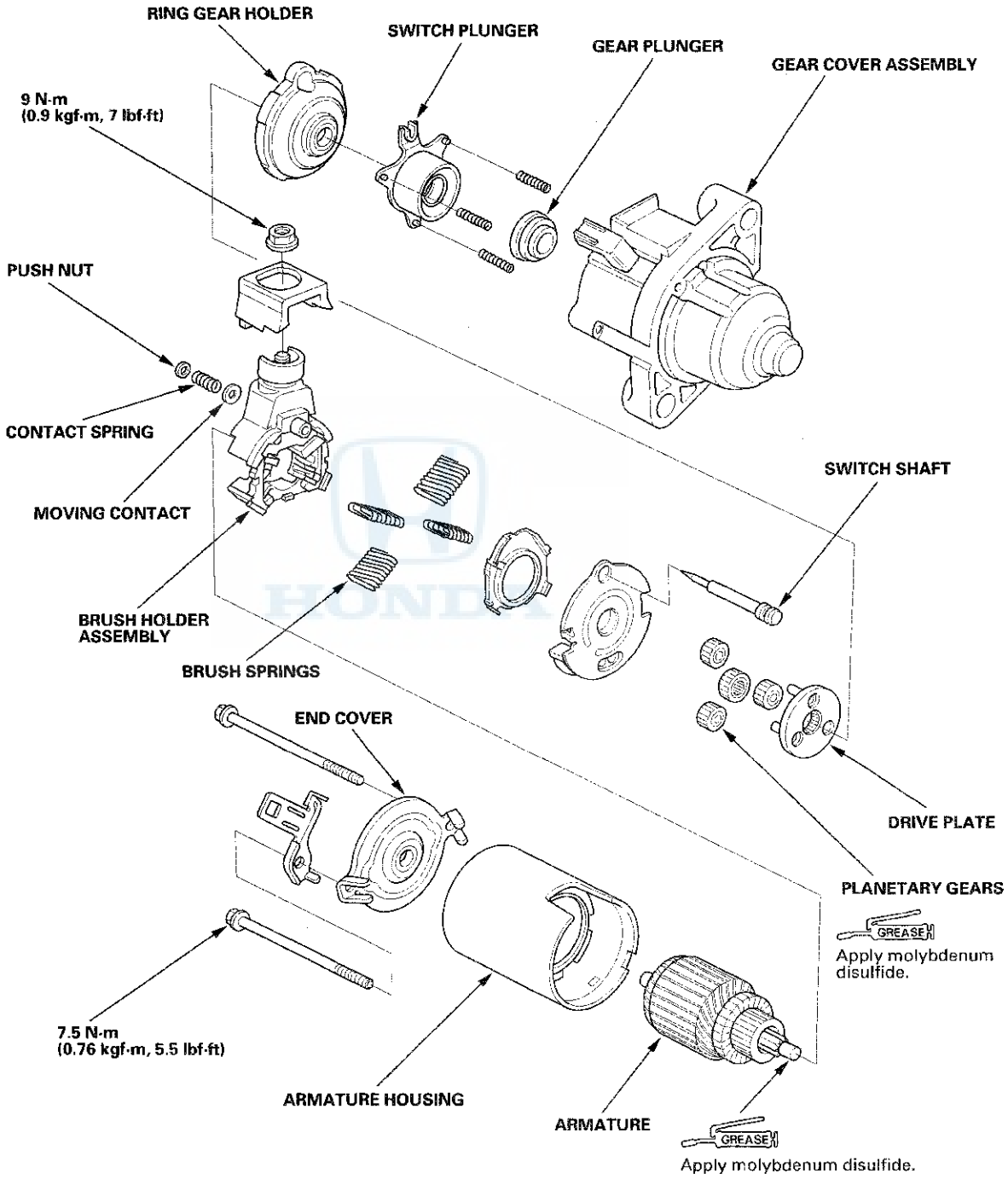

Armature Inspection and Test

1. Remove the starter (see page 4-11).

2. Disassemble the starter as shown in the exploded view.

3. Inspect the armature for wear or damage from contact with the permanent magnet. If there is wear or damage, replace the armature.

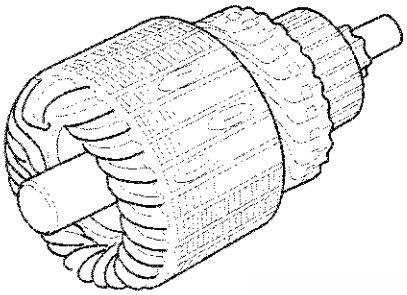

4. Check the commutator (A) surface. If the surface is dirty or burnt, resurface it with an emery cloth or a lathe to the specifications in step 5, or recondition with #500 or #600 sandpaper (B).

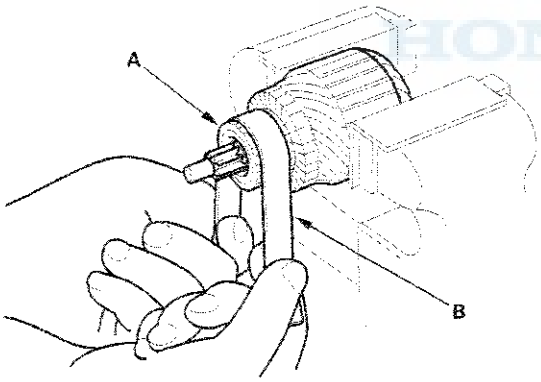

5. Check the commutator diameter. If the diameter is below the service limit, replace the armature.

Commutator Diameter
Standard (New): 28.0—28.1 mm (1.102—1.106 in.)
Service Limit: 27.5 mm (1.083 in.)

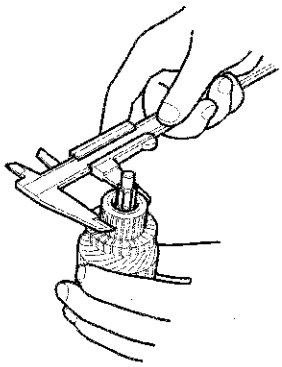

6. Measure the commutator (A) runout.

- If the commutator runout is within the service limit, check the commutator for carbon dust or brass chips between the segments.
- If the commutator runout is not within the service limit, replace the armature.

Commutator Runout
Standard (New): 0.02 mm (0.001 in.) max.
Service Limit: 0.05 mm (0.002 in.)

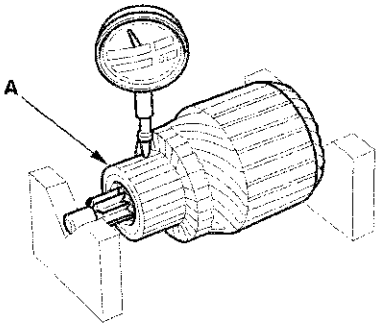

(cont'd)

Starter Overhaul (cont'd)

7. Check the mica depth (A). If the mica is too high (B), undercut the mica with a hacksaw blade to the proper depth. Cut away all the mica (C) between the commutator segments. The undercut should not be too shallow, too narrow, or V-shaped (D).

Commutator Mica Depth
Standard (New): 0.40—0.50 mm (0.016—0.020 in.)
Service Limit: 0.15 mm (0.006 in.)

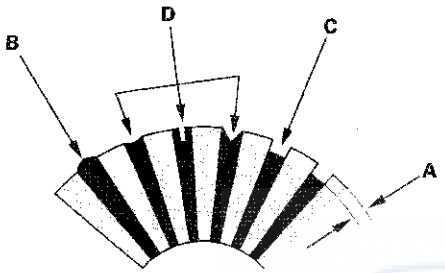

8. Use an ohmmeter to check for continuity between the segments of the commutator. If there is an open circuit between any of the segments, replace the armature.

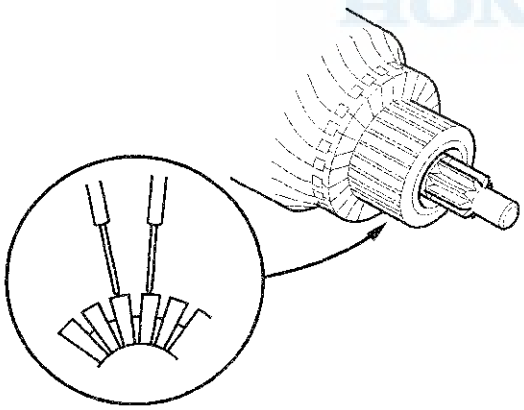

9. Place the armature (A) on an armature tester (B). Hold a hacksaw blade (C) on the armature core. If the blade is attracted to the core or vibrates while the core is turned, the armature is shorted. Replace the armature.

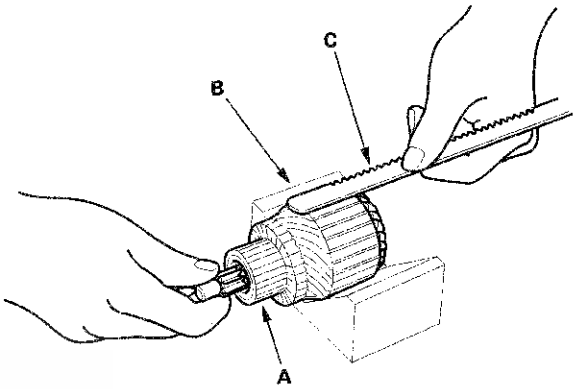

10. Use an ohmmeter to check for continuity between the commutator (A) and the armature coil core (B), and between the commutator and armature shaft (C). If there is continuity, replace the armature.

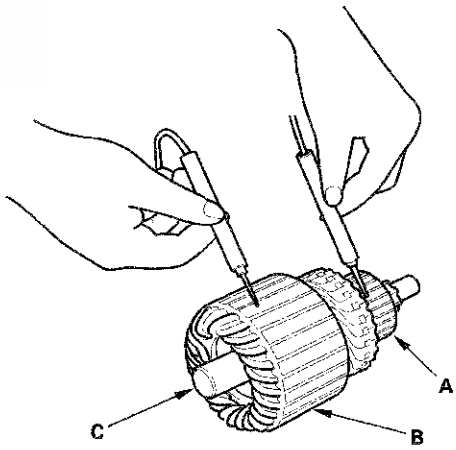

Starter Brush Inspection

11. Measure the brush length. If it is shorter than the service limit, replace the brush holder assembly.

    Brush Length
    Standard (New): 11.1—11.5 mm (0.44—0.45 in.)
    Service Limit: 4.3 mm (0.17 in.)

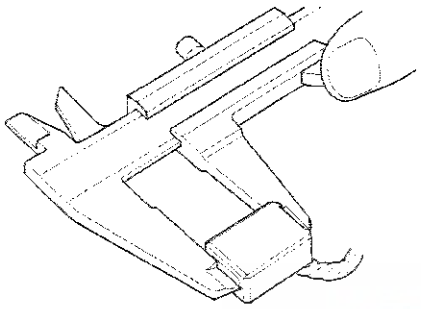

Starter Brush Holder Test

12. Check for continuity between the (+) brushes (A) and the (—) brushes (B). If there is continuity, replace the brush holder assembly.

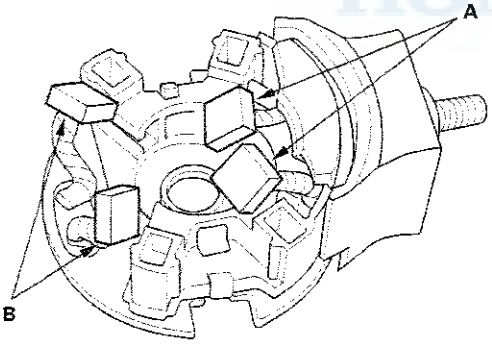

Planetary Gear Inspection

13. Check the planetary gears (A) and the internal ring gear (B). Replace them if they are worn or damaged.

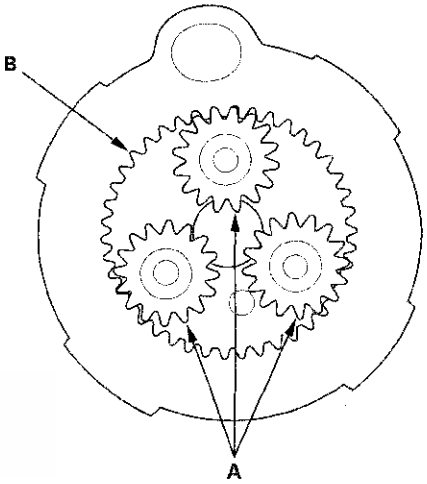

(cont'd)

Starter Overhaul (cont'd)

Overrunning Clutch Inspection

14. While holding the drive gear (A), turn the gear shaft (B) counterclockwise. Check that the drive gear comes out to the other end. If the drive gear does not move smoothly, replace the gear cover assembly.

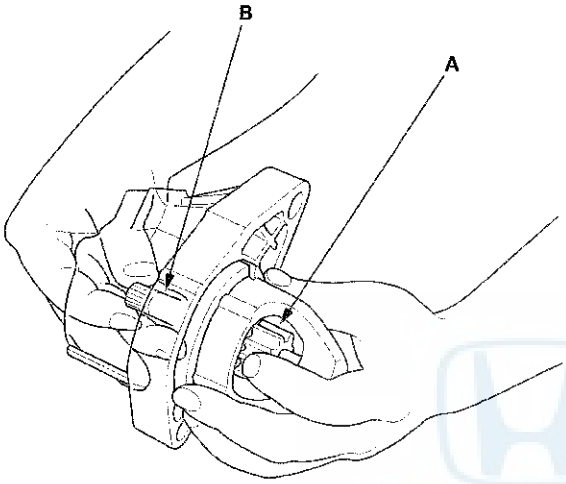

15. While holding the drive gear, turn the gear shaft clockwise. The gear shaft should turn freely. If the gear shaft does not turn freely, replace the gear cover assembly.

16. If the drive gear is worn or damaged, replace the overrunning clutch assembly; the gear is not available separately.
Check the condition of the flywheel ring gear (M/T model) or the torque converter ring gear (A/T model) to see if the starter drive gear teeth are damaged.

Starter Reassembly

17. Install the brush into the brush holder, and set the armature (A) in the brush holder (B).

NOTE: To seat the new brushes, slip a strip of #500 or #600 sandpaper, with the grit side up, between the commutator and each brush, and smoothly turn the armature. The contact surface of the brushes will be sanded to the same contour as the commutator.

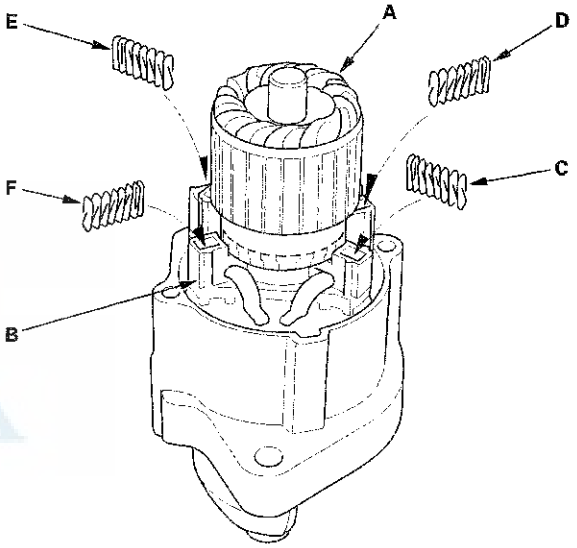

18. While squeezing a spring (C), insert it in the hole on the brush holder, and push it until it bottoms. Repeat this for the other three springs (D, E, and F).

19. Install the armature and the brush holder assembly into the housing.

NOTE: Make sure the armature stays in the holder.

Ignition System

Component Location Index

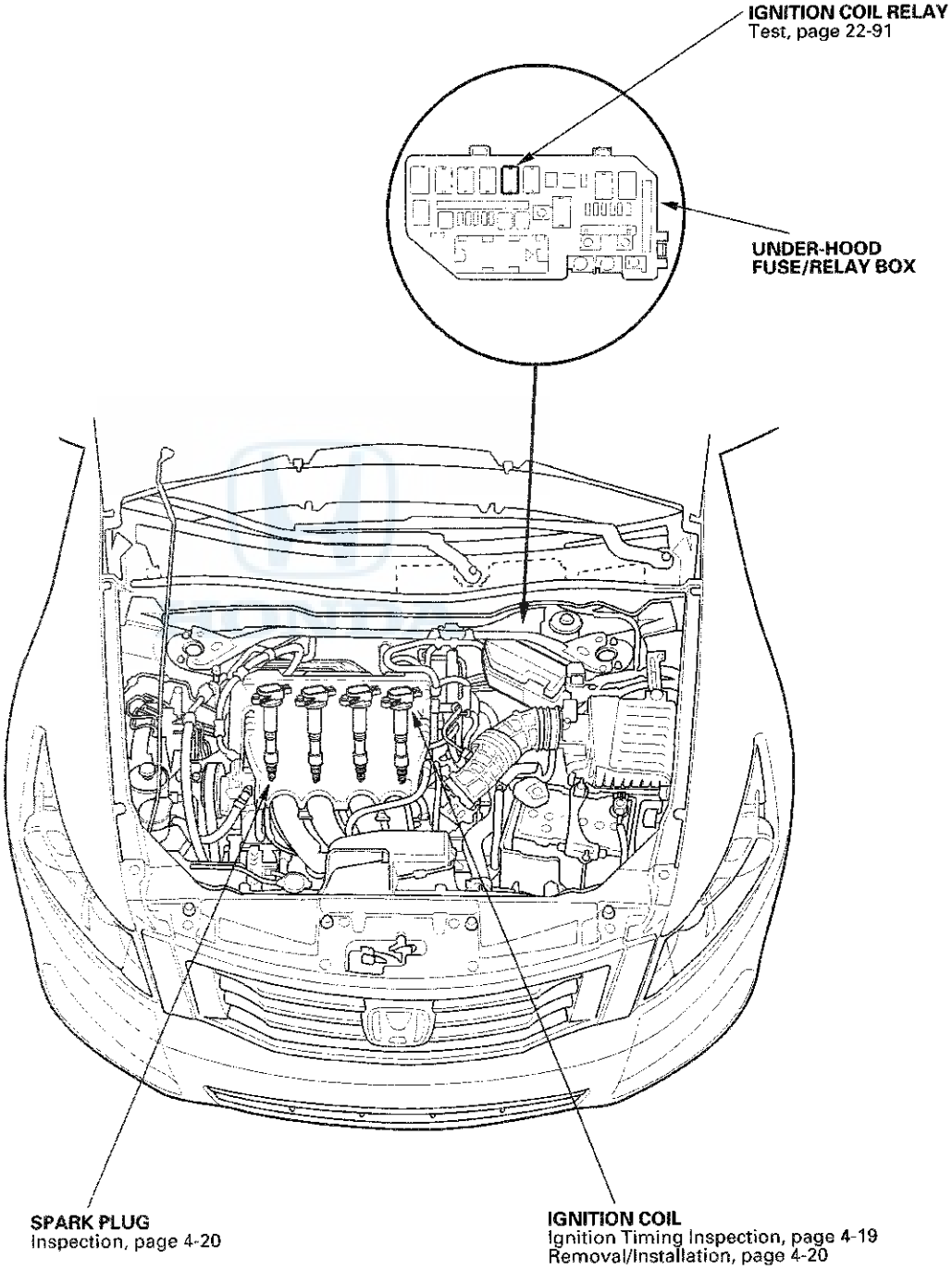

Circuit Diagram

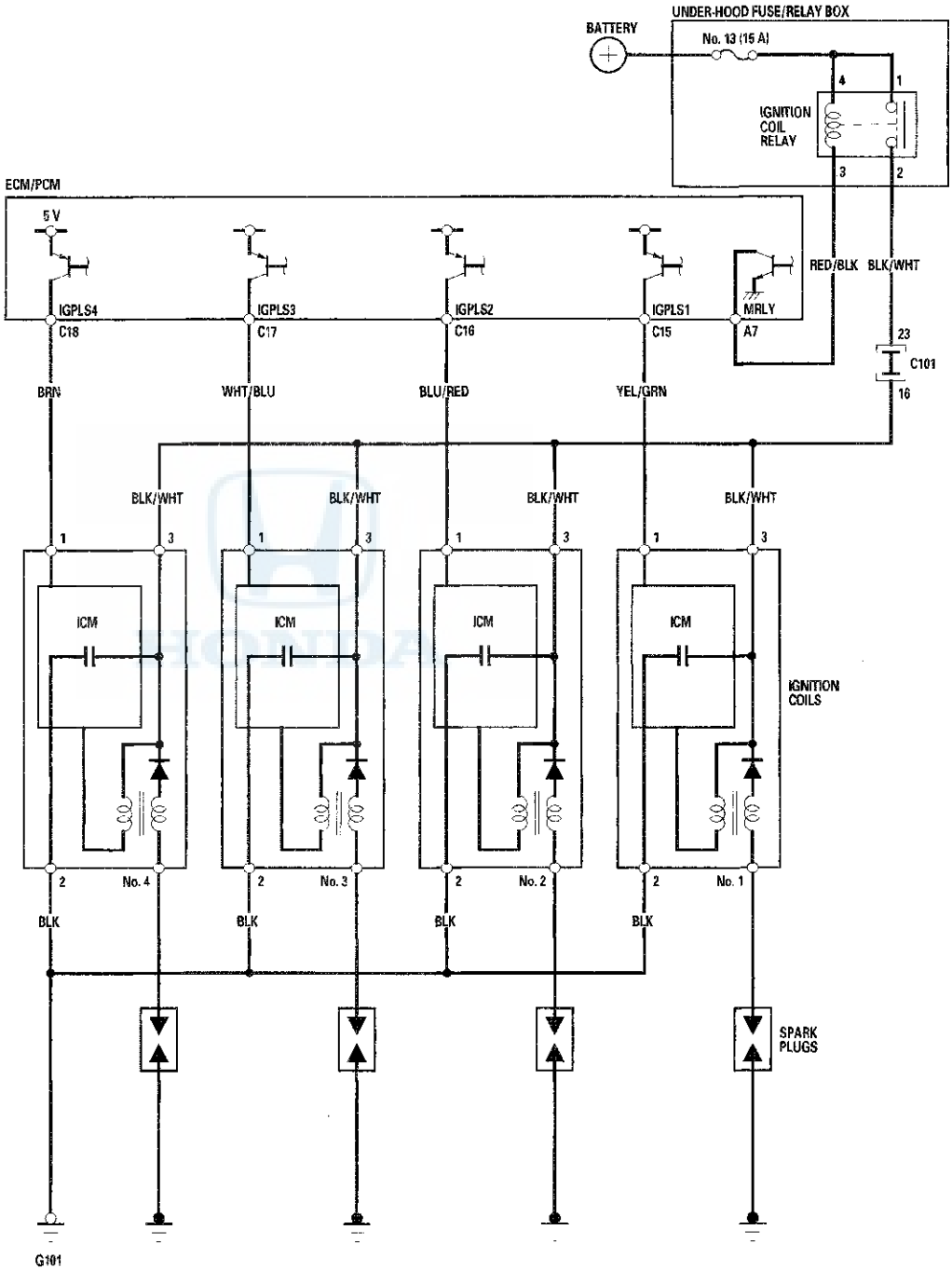

ICM : Ignition Control Module

Ignition Timing Inspection

1. Connect the Honda Diagnostic System (HDS) to the data link connector (DLC) (see step 2 on page 11-3).

2. Turn the ignition switch to ON (II).

3. Make sure the HDS communicates with the vehicle and the engine control module (ECM)/powertrain control module (PCM). If it does not communicate, troubleshoot the DLC circuit (see page 11-192).

4. Check for DTCs (see page 11-3). If a DTC is present, diagnose and repair the cause before continuing with this test.

5. Start the engine. Hold the engine speed at 3,000 rpm with no load (in N or P (A/T model) or neutral (M/T model)) until the radiator fan comes on, then let it idle.

6. Check the idle speed (see page 11-316).

7. Jump the SCS line with the HDS.

   NOTE: This step must be done to protect the ECM/PCM from damage.

8. Connect the timing light to the service loop (white tape).

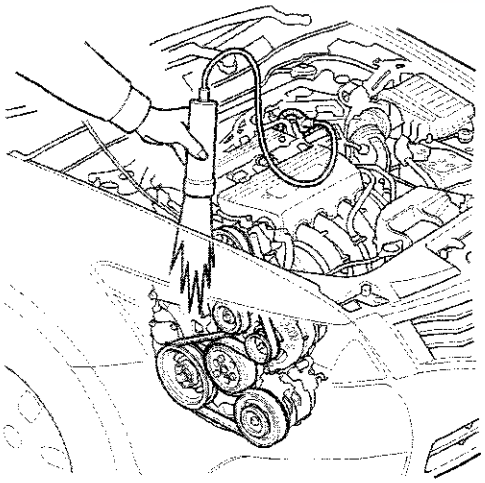

9. Aim the light toward the pointer (A) on the cam chain case. Check the ignition timing under a no load condition (headlights, blower fan, rear window defogger, and air conditioner are turned off).

   Ignition Timing:
   M/T model: 8 °±2 °BTDC (RED mark (B)) at idle in neutral
   A/T model: 8 °±2 °BTDC (RED mark (B)) at idle in N or P

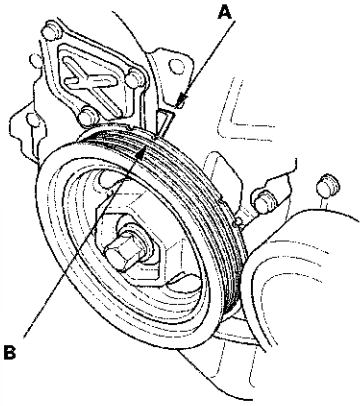

10. If the ignition timing differs from the specification, check the cam timing. If the cam timing is OK, update the ECM/PCM if it does not have the latest software (see page 11-215), or substitute a known-good ECM/PCM (see page 11-7), then recheck. If the system works properly, and the ECM/PCM was substituted, replace the original ECM/PCM (see page 11-216).

11. Disconnect the HDS and the timing light.

Ignition Coil Removal/Installation

1. Remove the ignition coil cover (A).

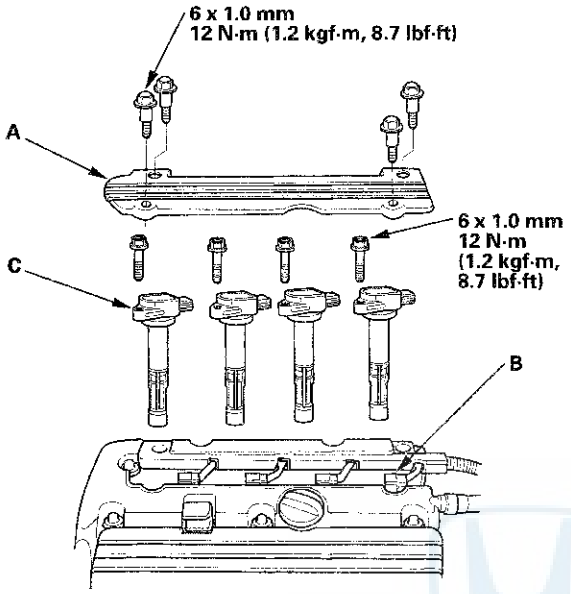

2. Disconnect the ignition coil connectors (B), then remove the ignition coils (C).

3. Install the ignition coils in the reverse order of removal.

Spark Plug Inspection

1. Remove the spark plugs, and inspect the electrodes and the ceramic insulator.

   - Burned or worn electrodes may be caused by these conditions:
     - Advanced ignition timing
     - Loose spark plug
     - Plug heat range too hot
     - Insufficient cooling

   - Fouled plugs may be caused by these conditions:
     - Retarded ignition timing
     - Oil in combustion chamber
     - Incorrect spark plug gap
     - Plug heat range too cold
     - Excessive idling/low speed running
     - Clogged air cleaner element
     - Deteriorated ignition coils

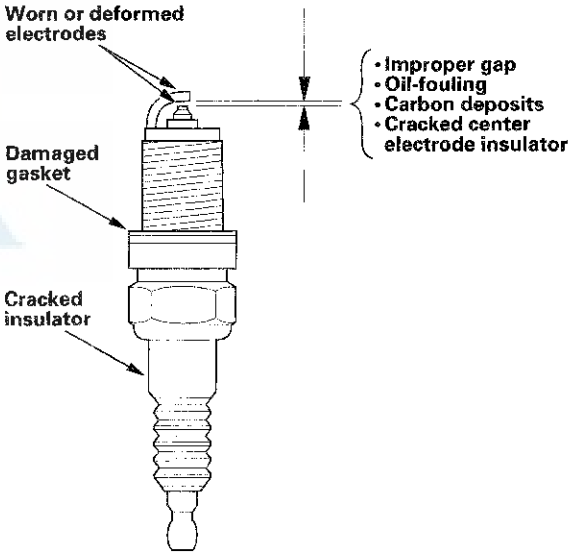

2. If the spark plug electrode is dirty or contaminated, clean the electrode with a plug cleaner.

   NOTE:
   - Do not use a wire brush or scrape the iridium electrode since this will damage the electrode.
   - When using a sand blaster spark plug cleaner, do not clean for more than 20 seconds to avoid damaging the electrode.

3. Replace the plug at the specified interval, if the center electrode is rounded (A), or if the spark plug gap (B) is out of specification. Use only the spark plugs listed.

   NOTE: Do not adjust the gap of iridium tip plugs.

   All models except PZEV
   Spark Plugs
   NGK: ILZKR7B-11S
   DENSO: SXU22HCR11S
   Electrode Gap
   Standard (New): 1.0—1.1 mm (0.039—0.043 in.)

   PZEV model
   Spark Plugs
   NGK: DILZKR7A11GS
   Electrode Gap
   Standard (New): 1.0—1.1 mm (0.039—0.043 in.)

   All models except PZEV

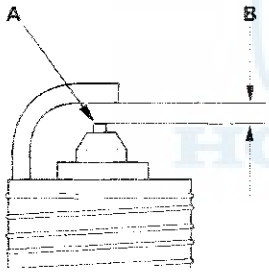

   PZEV model

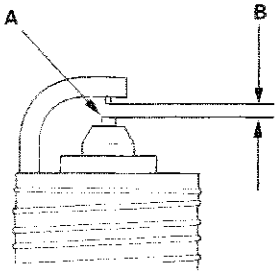

4. Apply a small amount of anti-seize compound to the plug threads, and screw the plugs into the cylinder head, finger-tight. Torque them to 18 N·m (1.8 kgf·m, 13 lbf·ft).

Component Location Index

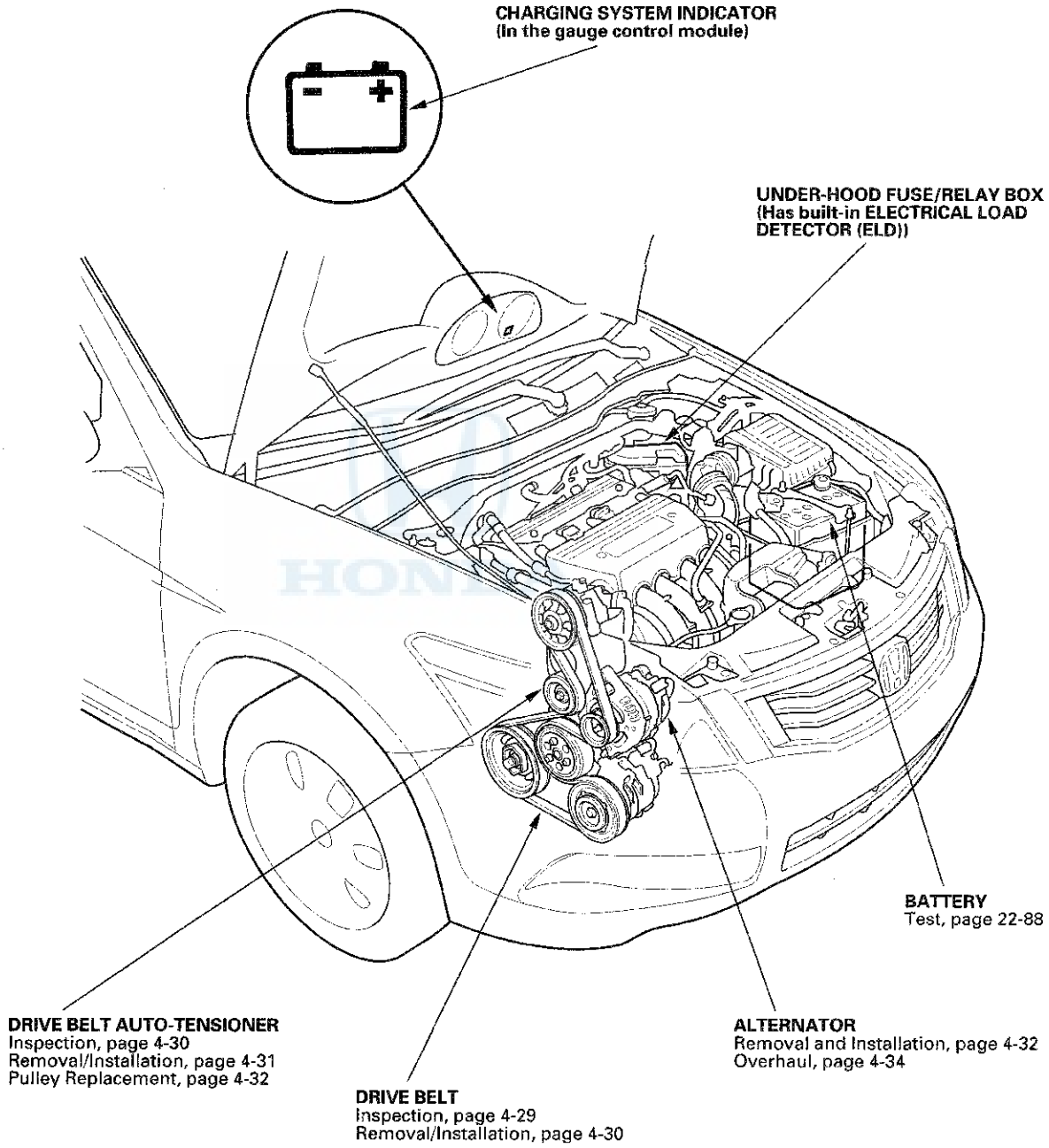

Symptom Troubleshooting Index

Symptom	Diagnostic procedure	Also check for
Charging system indicator does not come on with the ignition switch in ON (II)	Troubleshoot the charging system indicator circuit (see page 4-25).	
Charging system indicator stays on	1. Troubleshoot the charging system indicator circuit (see page 4-25). 2. Check for a broken drive belt (see page 4-29). 3. Check the drive belt auto-tensioner (see page 4-30). 4. Check for PGM-FI DTCs (see page 11-3).	
Battery discharged	1. Check for a poor connection at the battery terminal. 2. Test the battery (see page 22-88). 3. Troubleshoot the alternator and regulator circuit (see page 4-27). 4. Check for a broken drive belt (see page 4-29). 5. Check the drive belt auto-tensioner (see page 4-30). 6. Check for excessive parasitic electrical current draw with the ignition switch in LOCK (0), and the key removed. The multiplex control units may take up to 10 minutes to turn off (sleep mode) for some models.	
Battery overcharged	1. Test the battery (see page 22-88). 2. Troubleshoot the alternator and regulator circuit (see page 4-27).	

HONDA

Charging System

Circuit Diagram

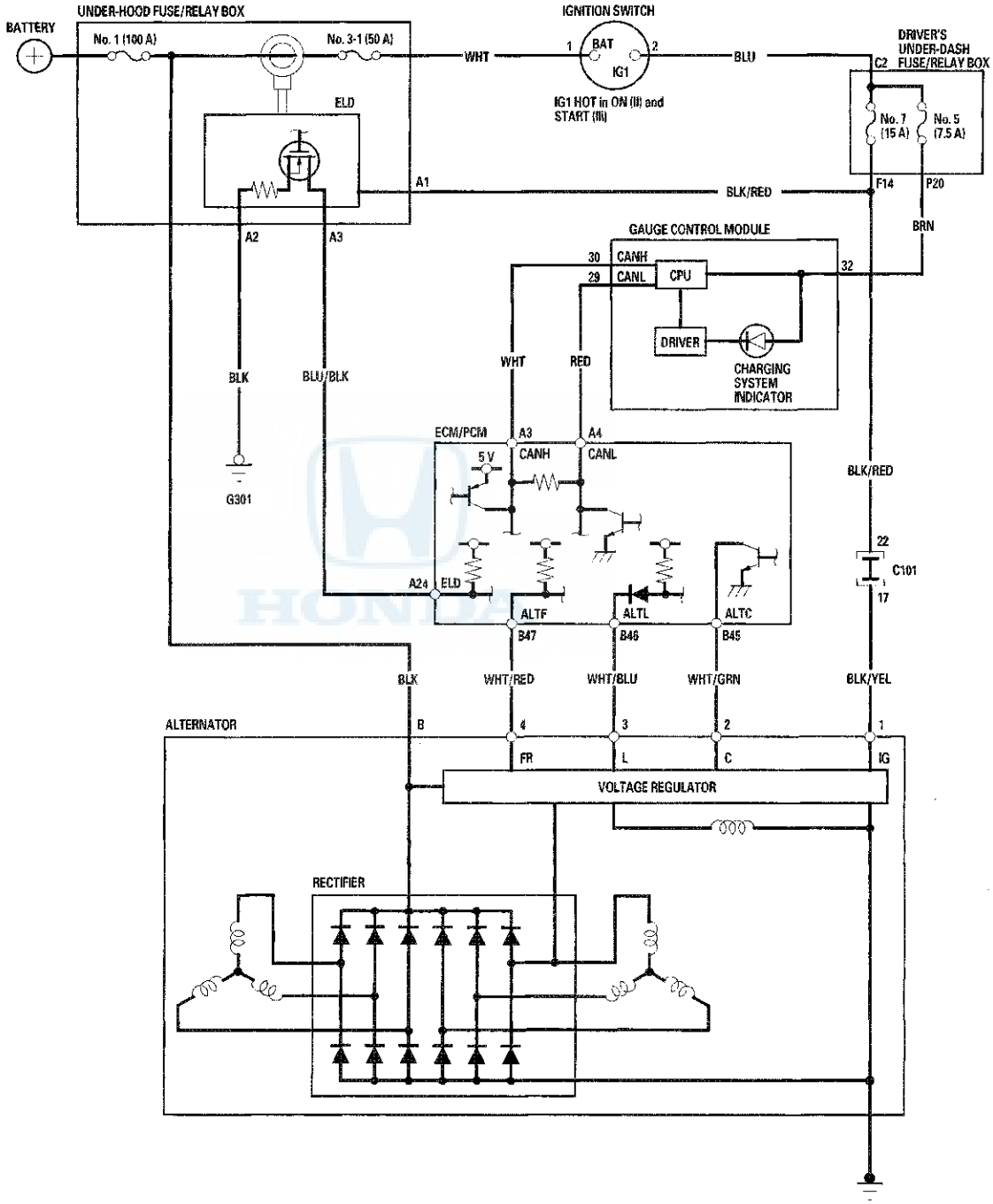

Charging System Indicator Circuit Troubleshooting

NOTE: Check for stored DTCs in the PGM-FI before troubleshooting the charging system indicator.

1. Turn the ignition switch to ON (II).

   Does the charging system indicator come on?

   YES—Go to step 2.

   NO—Go to step 14.

2. Start the engine. Hold the engine speed at 2,000 rpm for 1 minute.

   Does the charging system indicator go off?

   YES—Charging system indicator circuit is OK. Go to the alternator and regulator circuit troubleshooting (see page 4-27).■

   NO—Go to step 3.

3. Do the gauge control module self-diagnostic function procedure (see page 22-304).

   Does the charging system indicator flash?

   YES—Go to step 4.

   NO—Replace the gauge control module (see page 22-324).■

4. Turn the ignition switch to LOCK (0).

5. Disconnect the alternator 4P connector.

6. Turn the ignition switch to ON (II).

   Does the charging system indicator go off?

   YES—Replace the alternator (see page 4-32), or repair the alternator (see page 4-34).■

   NO—Go to step 7.

7. Turn the ignition switch to LOCK (0).

8. Connect the Honda Diagnostic System (HDS) to the data link connector (DLC) (see step 2 on page 11-3).

9. Turn the ignition switch to ON (II).

10. Make sure the HDS communicates with the vehicle and the engine control module (ECM)/powertrain control module (PCM). If it does not communicate, troubleshoot the DLC circuit (see page 11-192).

11. Jump the SCS line with the HDS, then turn the ignition switch to LOCK (0).

    NOTE: This step must be done to protect the ECM/PCM from damage.

12. Disconnect ECM/PCM connector B (49P).

13. Check for continuity between ECM/PCM connector terminal B46 and body ground.

ECM/PCM CONNECTOR B (49P)

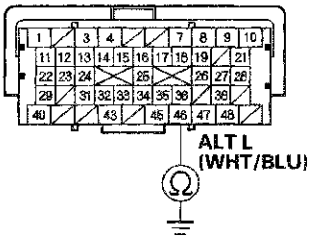

Terminal side of female terminals

Is there continuity?

YES—Repair short to ground in the wire between alternator 4P connector terminal No. 3 and ECM/PCM connector terminal B46.■

NO—Update the ECM/PCM if it does not have the latest software (see page 11-215), or substitute a known-good ECM/PCM (see page 11-7), then recheck. If the symptom/indication goes away with a known-good ECM/PCM, replace the original ECM/PCM (see page 11-216).■

(cont'd)

Charging System Indicator Circuit Troubleshooting (cont'd)

14. Do the gauge control module self-diagnostic function procedure (see page 22-304).

    Does the charging system indicator flash?

    YES—Go to step 15.

    NO—Replace the gauge control module (see page 22-324). ■

15. Turn the ignition switch to LOCK (0).

16. Disconnect the alternator 4P connector.

17. Connect alternator 4P connector terminal No. 3 to body ground with a jumper wire.

ALTERNATOR 4P CONNECTOR

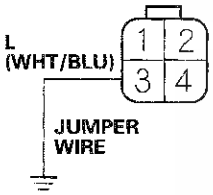

Wire side of female terminals

18. Turn the ignition switch to ON (II).

    Does the charging system indicator come on?

    YES—Replace the alternator (see page 4-32), or repair the alternator (see page 4-34). ■

    NO—Disconnect the jumper wire, then go to step 19.

19. Turn the ignition switch to LOCK (0).

20. Connect the HDS to the DLC (see step 2 on page 11-3).

21. Turn the ignition switch to ON (II).

22. Make sure the HDS communicates with the vehicle and the ECM/PCM. If it does not communicate, troubleshoot the DLC circuit (see page 11-192).

23. Jump the SCS line with the HDS, then turn the ignition switch to LOCK (0).

    NOTE: This step must be done to protect the ECM/PCM from damage.

24. Disconnect ECM/PCM connector B (49P).

25. Check for continuity between ECM/PCM connector terminal B46 and alternator 4P connector terminal No. 3.

ECM/PCM CONNECTOR B (49P)
Terminal side of female terminals

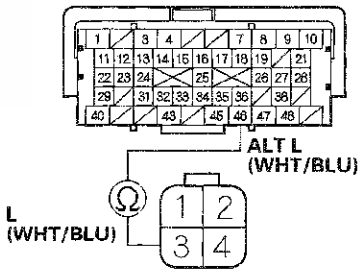

ALTERNATOR 4P CONNECTOR
Wire side of female terminals

Is there continuity?

YES—Update the ECM/PCM if it does not have the latest software (see page 11-215), or substitute a known-good ECM/PCM (see page 11-7), then recheck. If the symptom/indication goes away with a known-good ECM/PCM, replace the original ECM/PCM (see page 11-216). ■

NO—Repair open in the wire between alternator 4P connector terminal No. 3 and ECM/PCM connector terminal B46. ■

Alternator and Regulator Circuit Troubleshooting

Special Tools Required
Alternator, Regulator, Battery & Starter tester OTC3131
Available through the Honda Tool and Equipment Program 888-424-6857

1. Make sure the battery connections are good and the battery is sufficiently charged.

2. Connect the alternator, regulator, battery & starter tester (OTC3131) to the battery as shown.

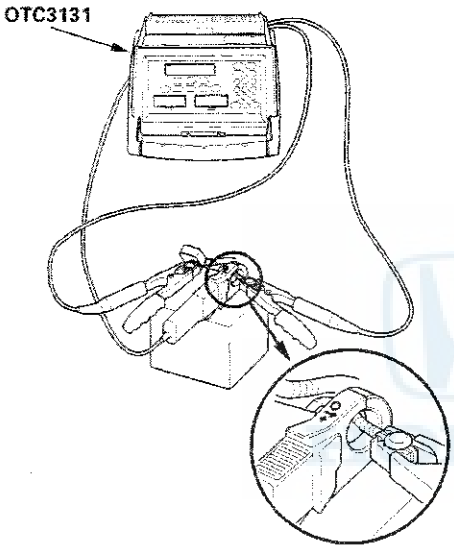

3. Start the engine. Hold the engine speed at 3,000 rpm with no load (in N or P (A/T model) or neutral (M/T model)) until the radiator fan comes on, then let it idle.

4. Do the CHARGING SYSTEM TEST.

   Does the display indicate voltage within 13.5 - 15.1 V and amperage of 87.5 A or more?

   YES—Go to step 5.

   NO—If the voltage is less than 13.5 V, go to alternator control circuit troubleshooting (see page 4-28). If the voltage is over 15.1 V and amperage is less than 87.5 A, replace the alternator (see page 4-32) or repair the alternator (see page 4-34).

5. Check the diode condition on the display.

   Does the display indicate GOOD?

   YES—The diode is OK. Troubleshooting is complete. ■

   NO—If the display indicates BAD, replace the alternator (see page 4-32) or repair the alternator (see page 4-34), then retest. If the display indicates N/A, the diode pattern could not be diagnosed.

Alternator Control Circuit Troubleshooting

1. Connect the Honda Diagnostic System (HDS) to the data link connector (DLC) (see step 2 on page 11-3).

2. Turn the ignition switch to ON (II).

3. Make sure the HDS communicates with the vehicle and the engine control module (ECM)/powertrain control module (PCM). If it does not communicate, troubleshoot the DLC circuit (see page 11-192).

4. Check for DTCs (see page 11-3). If a DTC is present, diagnose and repair the cause before continuing with this test.

5. Disconnect the alternator 4P connector.

6. Start the engine, and turn on the headlights to high beam.

7. Measure the voltage between alternator 4P connector terminal No. 2 and the positive terminal of the battery.

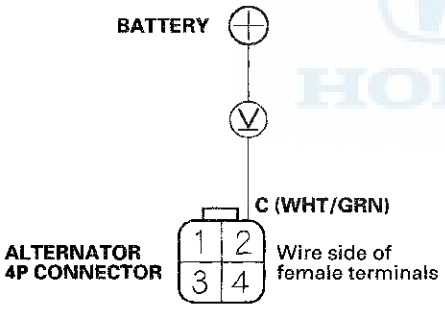

Is there 1 V or less?

YES—Go to step 11.

NO—Go to step 8.

8. Jump the SCS line with the HDS, then turn the ignition switch to LOCK (0).

   NOTE: This step must be done to protect the ECM/PCM from damage.

9. Disconnect ECM/PCM connector B (49P).

10. Check for continuity between ECM/PCM connector terminal B45 and body ground.

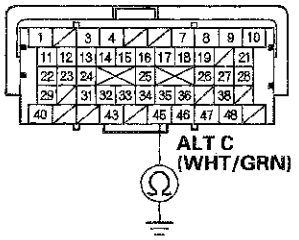

Wire side of female terminals

Is there continuity?

YES—Repair short to ground in the wire between alternator 4P connector terminal No. 2 and ECM/PCM connector terminal B45. ■

NO—Update the ECM/PCM if it does not have the latest software (see page 11-215), or substitute a known-good ECM/PCM (see page 11-7), then recheck. If the symptom/indication goes away with a known-good ECM/PCM, replace the original ECM/PCM (see page 11-216). ■

11. Jump the SCS line with the HDS, then turn the ignition switch to LOCK (0).

    NOTE: This step must be done to protect the ECM/PCM from damage.

12. Disconnect ECM/PCM connector B (49P).

13. Check for continuity between ECM/PCM connector terminal B45 and alternator 4P connector terminal No. 2.

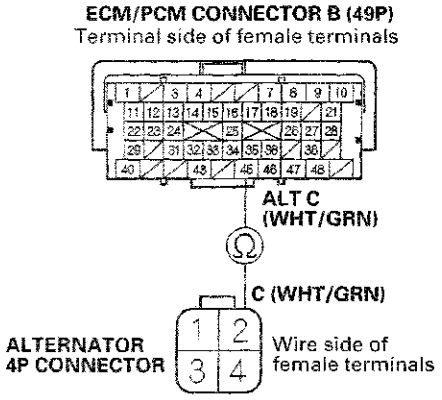

Is there continuity?

YES—Replace the alternator (see page 4-32), or repair the alternator (see page 4-34). ■

NO—Repair open in the wire between alternator 4P connector terminal No. 2 and ECM/PCM connector terminal B45. ■

Drive Belt Inspection

1. Inspect the belt for cracks or damage. If the belt is cracked or damaged, replace it (see page 4-30).

2. Check the position of the auto-tensioner indicator's pointer (A) is within the standard range (B) as shown. If it is out of the standard range, replace the drive belt (see page 4-30).

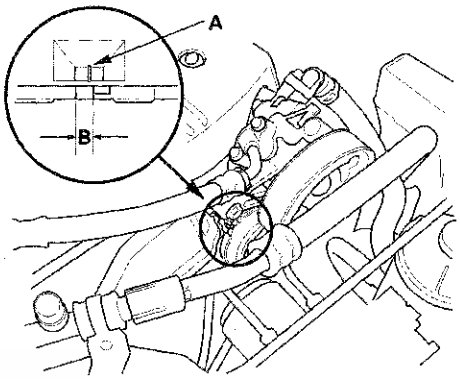

Drive Belt Removal/Installation

Special Tools Required
Belt tension release tool Snap-on YA9317 or equivalent, commercially available

1. Move the auto-tensioner (A) with the belt tension release tool (B) in the direction shown to relieve tension from the drive belt (C), then remove the drive belt.

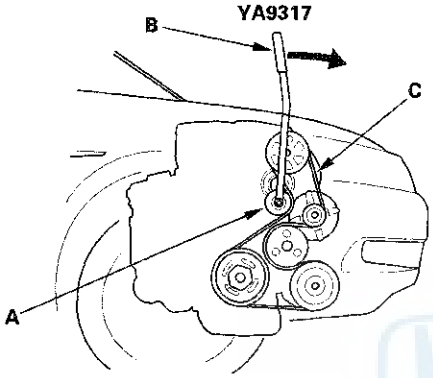

2. Install the new drive belt in the reverse order of removal.

Drive Belt Auto-tensioner Inspection

Special Tools Required
Belt tension release tool Snap-on YA9317 or equivalent, commercially available

1. Turn the ignition switch to ON (II), and make sure the A/C switch is OFF, then turn the ignition switch to LOCK (0).

2. Check the position of the auto-tensioner indicator's pointer (A). Start the engine then check the position again with the engine idling. If the position of the indicator moves or fluctuates very much, replace the auto-tensioner (see page 4-31).

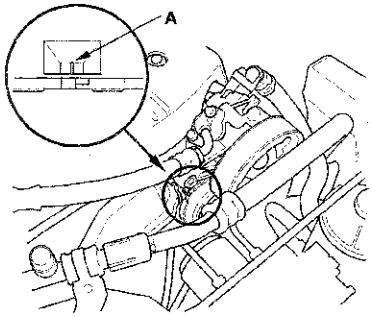

3. Check for abnormal noise from the tensioner pulley. If you hear abnormal noise, replace the tensioner pulley (see page 4-32).

4. Remove the drive belt (see page 4-30).

5. Move the auto-tensioner within its limit with the belt tension release tool in the direction shown. Check that the tensioner moves smoothly and without any abnormal noise. If the tensioner does not move smoothly, or if you hear abnormal noise, replace the auto-tensioner (see page 4-31).

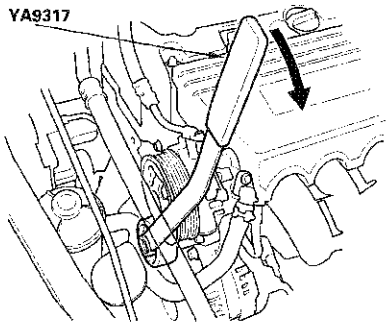

6. Remove the auto-tensioner (see page 4-31).

7. Clamp the auto-tensioner (A) by using two 8 mm bolts (B) and a vise (C) as shown. Do not clamp the auto-tensioner itself.

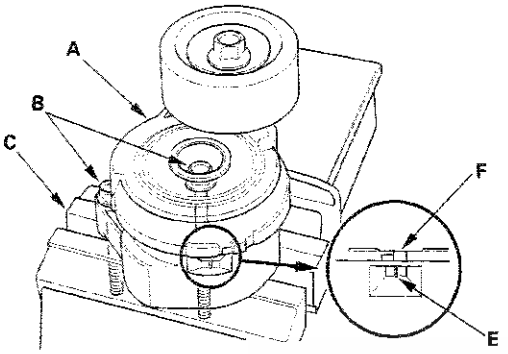

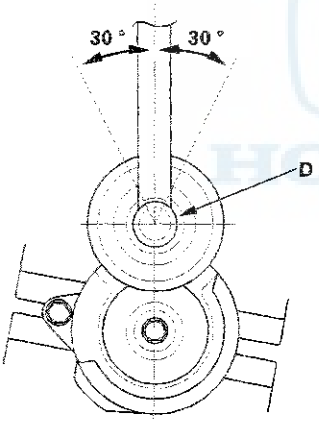

8. Set the torque wrench (D) on the pulley bolt, and align it as shown.

9. Align the auto-tensioner indicator's pointer (E) on the tensioner base with Max. belt position mark (F) on the tensioner arm by using the torque wrench, and measure the torque. If the torque value is out of specification, replace the auto-tensioner (see page 4-31).

   NOTE: If the auto-tensioner indicator's pointer exceeds the Max. belt position mark, recheck the torque.

   Auto-tensioner Spring Torque:
   33.1—40.5 N·m (3.38—4.13 kgf·m, 24.4—29.9 lbf·ft)

Drive Belt Auto-tensioner Removal/ Installation

1. Remove the drive belt (see page 4-30).

2. Remove the power steering (P/S) fluid reservoir from the holder.

3. Remove the P/S pump (A) without disconnecting the P/S hoses, then remove the P/S hose bracket (B).

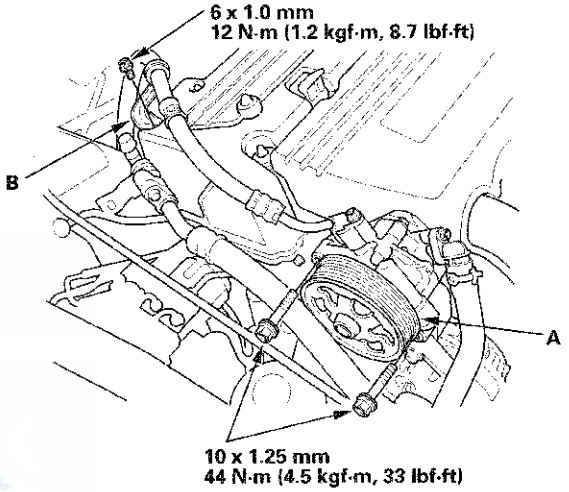

4. Remove the auto-tensioner.

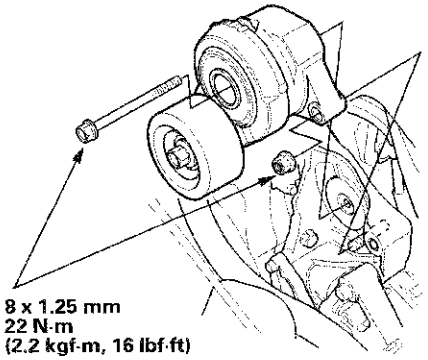

5. Install the auto-tensioner in the reverse order of removal.

Tensioner Pulley Replacement

1. Remove the auto-tensioner (see page 4-31).

2. Clamp the auto-tensioner (A) by using two 8 mm bolts (B) and a vise (C) as shown. Do not clamp the auto-tensioner itself, then remove the tensioner pulley bolt (D), then remove the tensioner pulley (E).

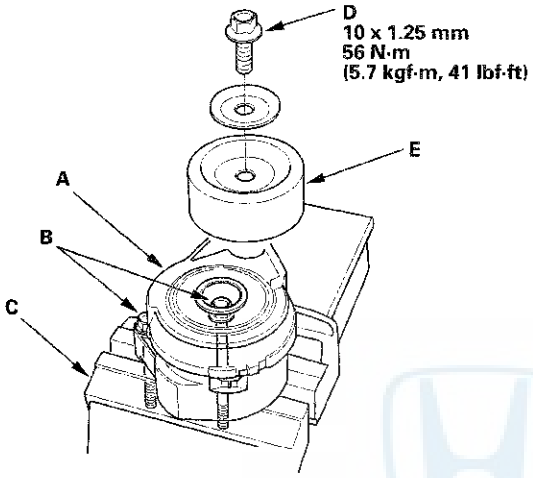

3. Install the tensioner pulley in the reverse order of removal.

Alternator Removal and Installation

Removal

1. Do the battery terminal disconnection procedure (see page 22-89).

2. Remove the drive belt (see page 4-30).

3. Remove the two bolts securing the alternator.

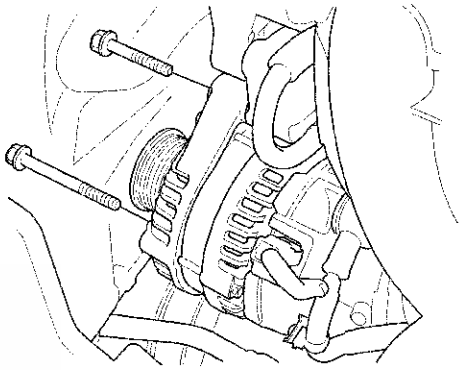

4. Disconnect the alternator connector (A) and the positive alternator cable (B), and remove the harness clamp (C), then remove the alternator.

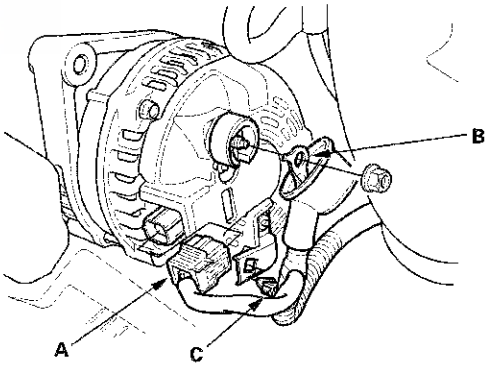

Installation

1. Install the alternator, then connect the alternator connector (A) and the positive alternator cable (B), and install the harness clamp (C). Make sure the crimped side of the ring terminal faces away from the alternator when you connect it.

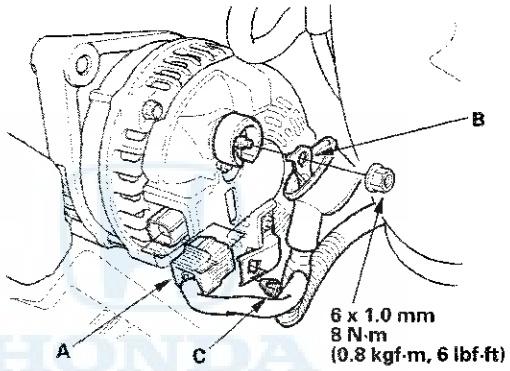

2. Tighten the two bolts securing the alternator.

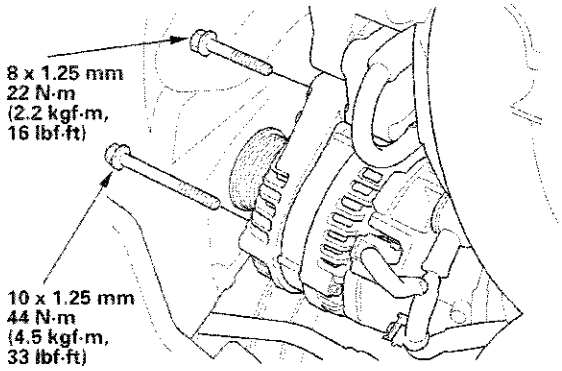

3. Install the drive belt (see page 4-30).

4. Do the battery terminal reconnection procedure (see page 22-89).

Alternator Overhaul

Exploded View

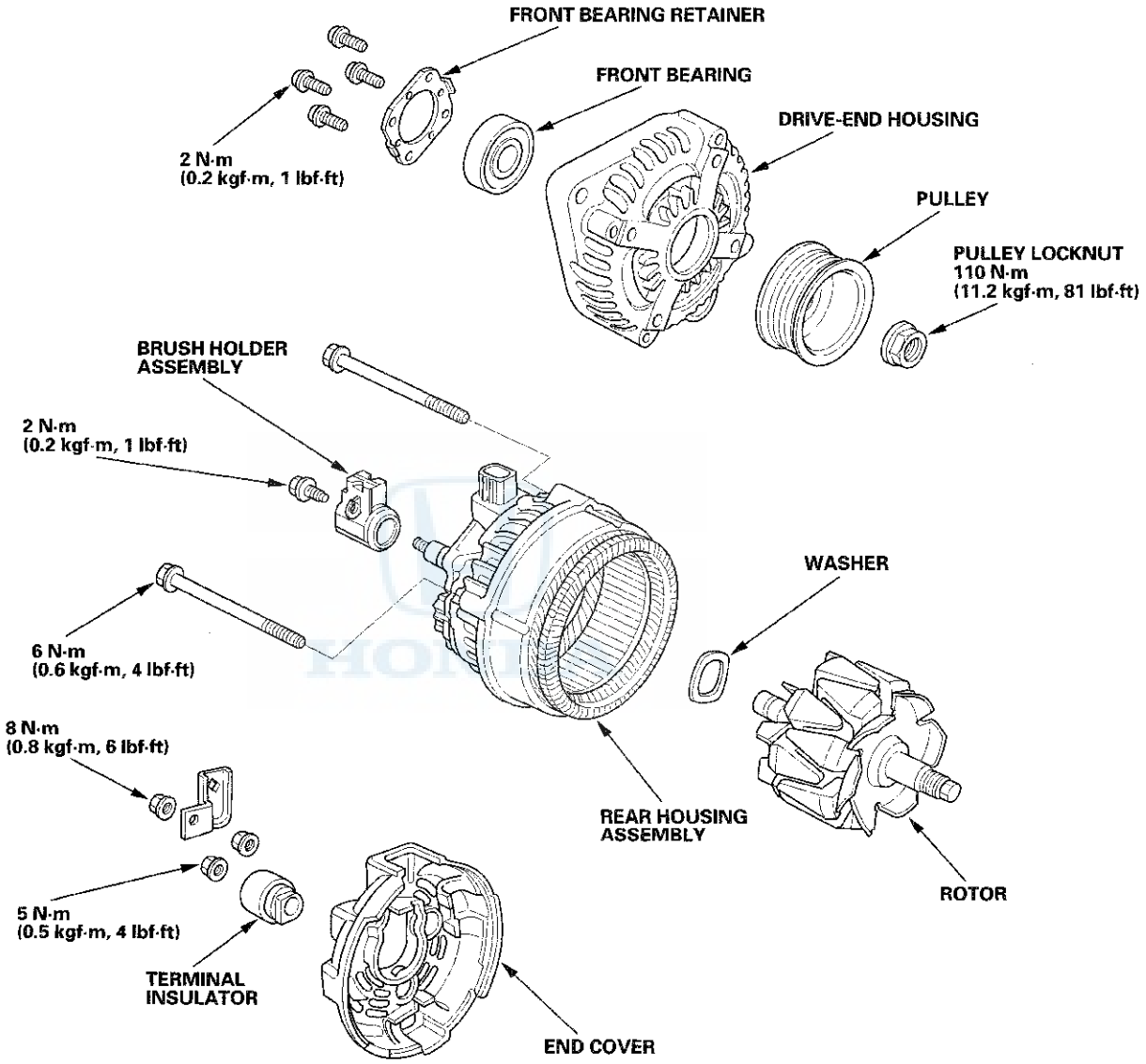

Special Tools Required
- Driver 07749-0010000
- Attachment, 42 x 47 mm 07746-0010300

NOTE: Refer to the Exploded View as needed during this procedure.

1. Test the alternator and regulator before you remove them (see page 4-27).

2. Remove the alternator (see page 4-32).

3. If the front bearing needs replacing, remove the pulley locknut with a 10 mm wrench (A) and a 22 mm wrench (B). If necessary, use an impact wrench.

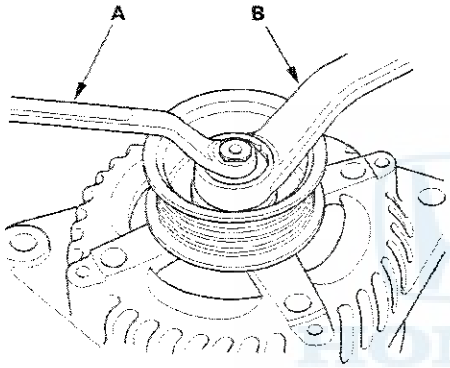

4. Remove the harness stay and the three flange nuts from the alternator.

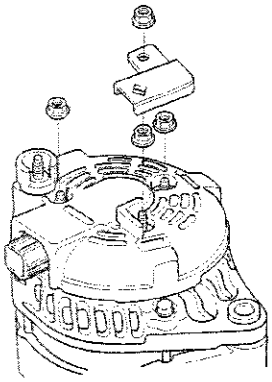

5. Remove the end cover.

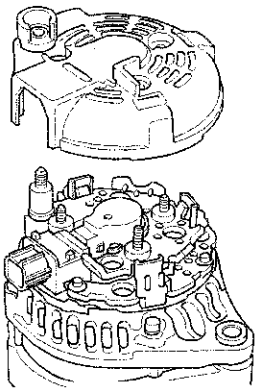

6. Remove the brush holder assembly.

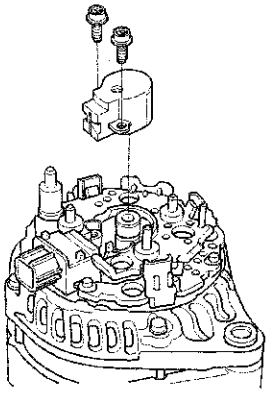

(cont'd)

Alternator Overhaul (cont'd)

7. Remove the four through bolts, then remove the rear housing assembly (A), and washer (B).

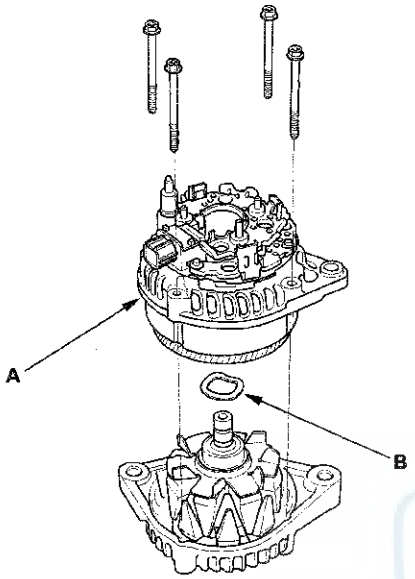

8. If you are not replacing the front bearing, go to step 13. Remove the rotor from the drive-end housing.

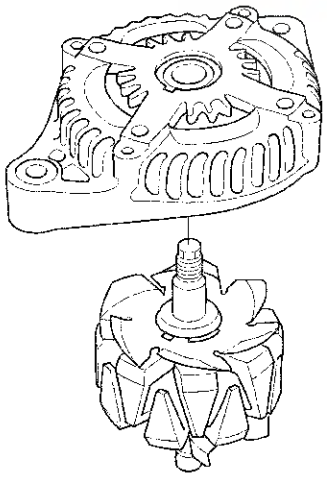

9. Inspect the rotor shaft for scoring, and inspect the bearing journal surface in the drive-end housing for seizure marks.
   - If the rotor is damaged, replace the rotor assembly.
   - If the rotor is OK, go to step 10.

10. Remove the front bearing retainer.

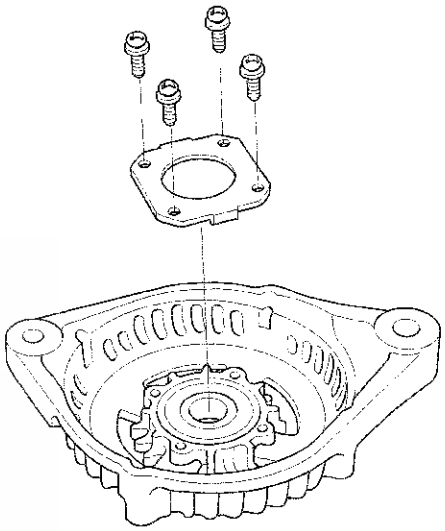

11. Drive out the front bearing with a brass drift and a hammer.

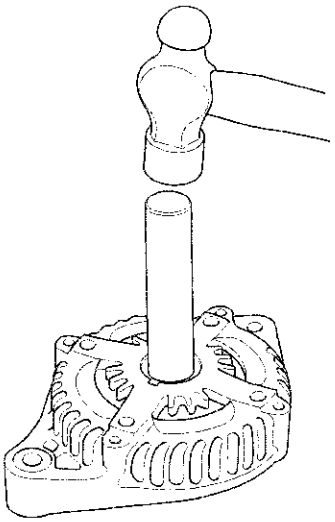

12. Install a new front bearing in the driver-end housing with a hammer, the driver, and the attachment, 43 x 47 mm.

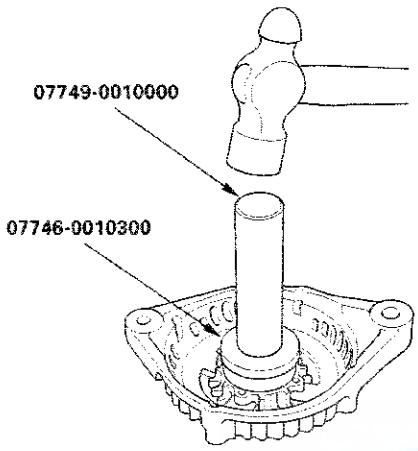

Alternator Brush Inspection

13. Measure the length of both brushes (A) with a vernier caliper (B).

- If either brush is shorter than the service limit, replace the brush holder assembly.
- If brush length is OK, go to step 14.

Alternator Brush Length
Standard (New): 10.5 mm (0.41 in.)
Service Limit: 1.5 mm (0.06 in.)

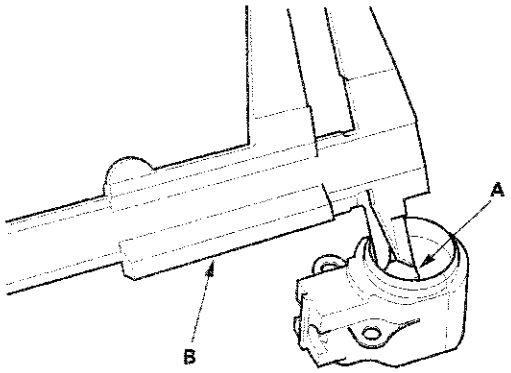

Rotor Slip Ring Test

14. Check for continuity between the slip rings (A).

- If there is continuity, go to step 15.
- If there is no continuity, replace the rotor assembly.

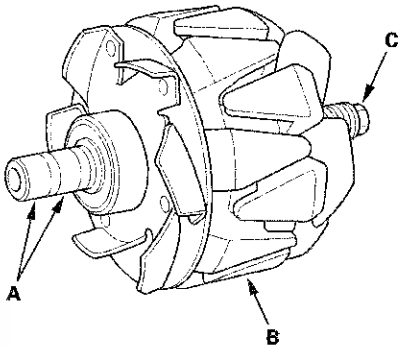

15. Check for continuity between each slip ring, the rotor (B), and the rotor shaft (C).

- If there is no continuity, go to step 16.
- If there is continuity, replace the rotor assembly.

(cont'd)

Alternator Overhaul (cont'd)

Alternator Reassembly

16. If you removed the pulley, put the rotor in the drive-end housing, then tighten its locknut to 110 N·m (11.2 kgf·m, 81.0 lbf·ft).

17. Remove any grease or oil from the slip rings.

18. Put the rear housing assembly and the drive-end housing/rotor assembly together, and tighten the four through bolts.

19. Push the brushes (A) in, then insert a pin or drill bit (B) (about 1.6 mm (0.06 in.) diameter) to hold them there.

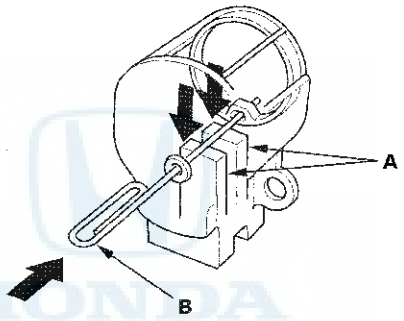

20. Install the brush holder assembly, and pull out the pin or drill bit.

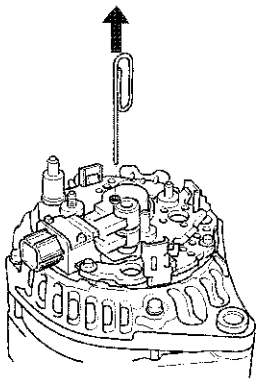

21. Install the end cover.

22. After assembling the alternator, turn the pulley by hand to make sure the rotor turns smoothly and without noise.

23. Install the alternator (see page 4-33) and the drive belt (see page 4-30).

Cruise Control

Component Location Index

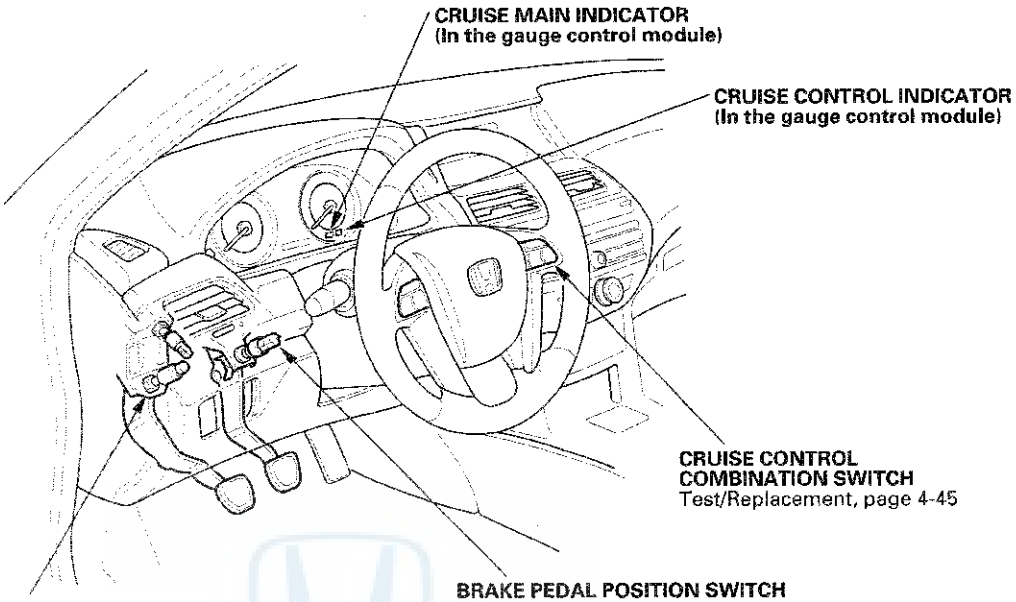

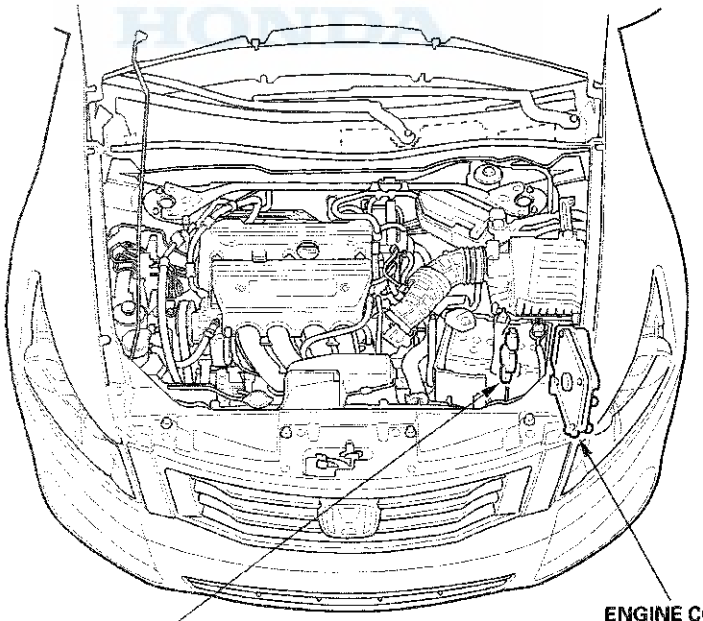

Cruise Control

Symptom Troubleshooting Index

Symptom	Diagnostic procedure	Also check for
Cruise control cannot be set	1. Check for PGM-FI DTCs (see page 11-3). 2. Check the No. 10 (20 A) fuse in the under-hood fuse/relay box, and the No. 7 (15 A) fuse in the driver's under-dash fuse/relay box. 3. Do the cruise control combination switch test (see page 4-45). 4. Do the cruise control input test (see page 4-43).	Poor ground G101 (A/T model) or G302 (M/T model)
Cruise control can be set, but the cruise main indicator does not come on	1. Check for PGM-FI DTCs (see page 11-3). 2. Do the gauge control module self-diagnostic function procedure (see page 22-304). 3. Do the cruise control input test (see page 4-43). Test the cruise control main switch signal input.	Faulty gauge control module
Cruise control can be set, but the cruise control indicator does not come on	1. Check for PGM-FI DTCs (see page 11-3). 2. Do the gauge control module self-diagnostic function (see page 22-304). 3. Do the cruise control input test (see page 4-43). Test the cruise control indicator signal input.	Faulty gauge control module
Vehicle does not accelerate accordingly when the resume/accel switch is pressed	1. Check for PGM-FI DTCs (see page 11-3). 2. Do the cruise control combination switch test (see page 4-45). 3. Do the cruise control input test (see page 4-43). Test the cruise control resume/accel switch signal input.	Open circuit, loose or disconnected terminals: GRY, LT GRN or LT BLU, GRY wire
Set speed does not cancel when the brake pedal is pressed	1. Check for PGM-FI DTCs (see page 11-3). 2. Do the brake pedal position switch test (see page 19-6). 3. Do the cruise control input test (see page 4-43). Test the brake pedal position switch signal input.	• Short to power on the ORN wire • Faulty brake pedal position switch
Set speed does not cancel (engine rpm stays high) when the clutch pedal is pressed (M/T model)	1. Check for PGM-FI DTCs (see page 11-3). 2. Do the clutch pedal position switch test (see page 4-45). 3. Do the cruise control input test (see page 4-43). Test the clutch pedal position switch signal input.	• Short to ground in the BRN wire • Faulty clutch pedal position switch
Set speed does not cancel when the cruise control main switch is pressed	1. Check for PGM-FI DTCs (see page 11-3). 2. Do the cruise control combination switch test (see page 4-45). 3. Do the cruise control input test (see page 4-43). Test the cruise control main switch signal input.	Short to power on the LT GRN, YEL wire
Set speed does not cancel when the cancel switch is pressed	1. Check for PGM-FI DTCs (see page 11-3). 2. Do the cruise control combination switch test (see page 4-45). 3. Do the cruise control input test (see page 4-43). Test the cruise control cancel switch signal input.	Open circuit, loose or disconnected terminals: GRY, LT GRN or LT BLU, GRY wire

Symptom	Diagnostic procedure	Also check for
Set speed does not resume when the resume/accel switch is pressed (with the cruise control main switch turned on, and set speed temporarily canceled by pressing the brake pedal)	1. Check for PGM-FI DTCs (see page 11-3). 2. Check the brake pedal position switch adjustment (see page 19-6). 3. Do the cruise control combination switch test (see page 4-45). 4. Do the cruise control input test (see page 4-43). Test the cruise control resume/accel switch signal input. Test the brake pedal position switch signal input.	• Faulty brake pedal position switch • Open circuit, loose or disconnected terminals: LT BLU, GRY wire
Set speed does not resume when the resume/accel switch is pressed (with the cruise control main switch turned on, and set speed temporarily canceled by pressing the clutch pedal) (M/T model)	1. Check for PGM-FI DTCs (see page 11-3). 2. Check the clutch pedal position switch adjustment (see page 12-7). 3. Do the cruise control combination switch test (see page 4-45). 4. Do the cruise control input test (see page 4-43). Test the resume/accel switch signal input. Test the clutch pedal position switch signal input.	• Open circuit, loose or disconnected terminals: LT BLU, GRY wire • Faulty clutch pedal position switch
With the ignition switch in ON (II), and the lighting switch turned on, the cruise control combination switch illumination does not come on	Check the cruise control combination switch test (see page 4-45).	

HONDA

Circuit Diagram

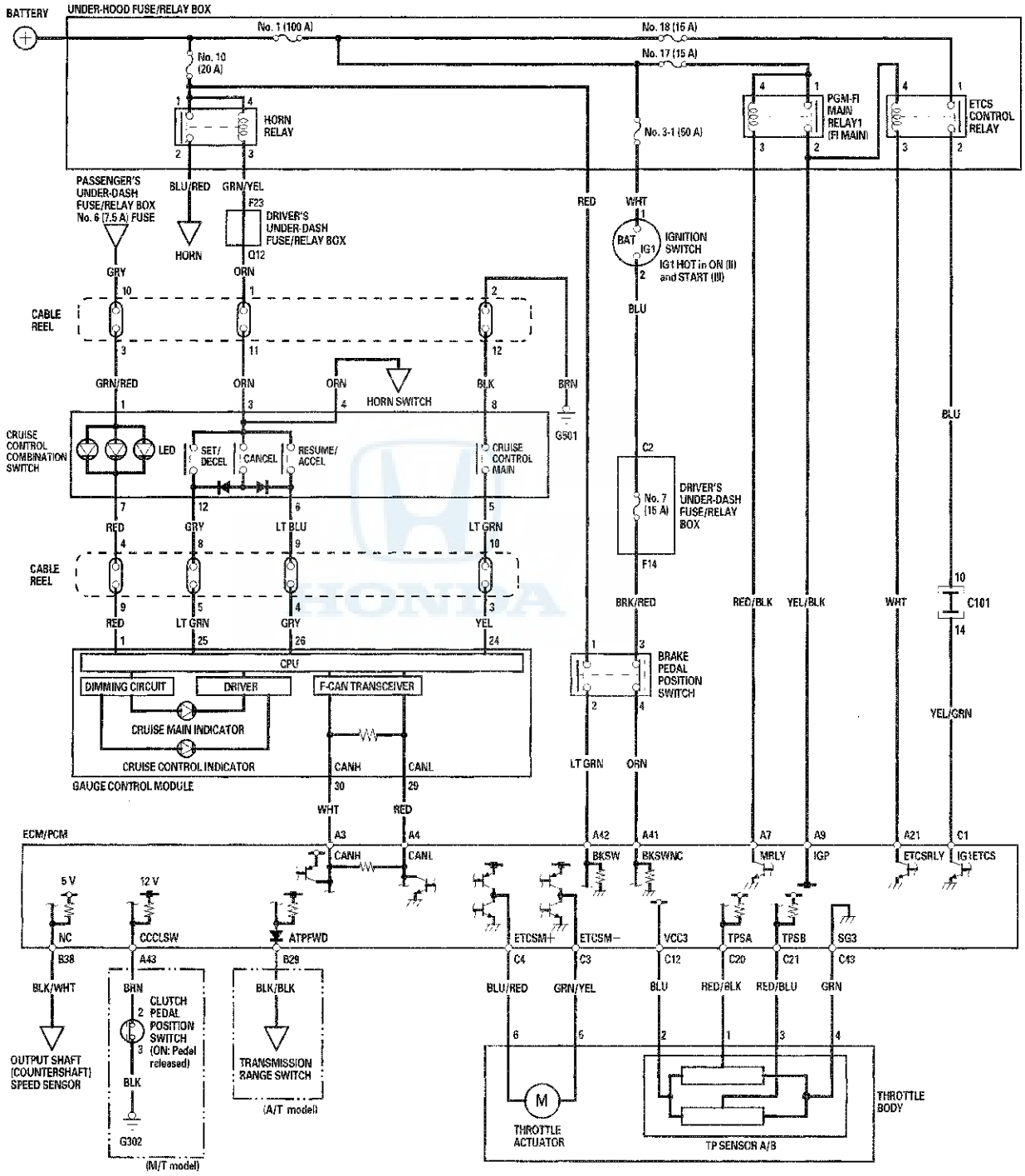

Cruise Control Input Test

NOTE: Always make sure that you have the latest Honda Diagnostic System (HDS) software.

1. Connect the HDS to the data link connector (DLC) (see step 2 on page 11-3).
2. Turn the ignition switch to ON (II).
3. Make sure the HDS communicates with the vehicle and the engine control module (ECM)/powertrain control module (PCM). If it does not communicate, troubleshoot the DLC circuit (see page 11-192).
4. Go to PGM-FI, and check for DTCs (see page 11-3).
5. Do the following tests while monitoring parameters in the PGM-FI DATA LIST with the HDS.

   NOTE: Intermittent failures are often caused by loose circuit connections. While monitoring cruise control inputs, flex the circuit wires, and note if any of the test results change.

Signal to be tested	Test condition	Parameter: Desired result	Possible cause if result is not obtained
Brake pedal position switch signal	Brake pedal pressed, then released	CRUISE BRAKE SW should indicate OFF when the brake pedal is pressed and ON when the brake pedal is released.	• Faulty brake pedal position switch • Blown No. 7 (15 A) fuse in the driver's under-dash fuse/relay box • An open in the wire between the ECM/PCM and the brake pedal position switch • A wire shorted to ground between the ECM/PCM and the brake pedal position switch
Clutch pedal position switch signal (M/T model)	Clutch pedal pressed, then released	SHIFT/CLUTCH SW should indicate ON when the clutch pedal is pressed and OFF when the clutch pedal is released.	• Faulty clutch pedal position switch • An open in the wire between the ECM and the clutch pedal position switch • A wire shorted to ground between the ECM and the brake pedal position switch • Poor ground G302
Transmission range switch signal (A/T model)	Shift lever in D and D3	SHIFT/CLUTCH SW should indicate ON in P, R, N, 2, and 1 and OFF in D and D3.	• Faulty transmission range switch • An open in the wire between the PCM and the transmission range switch • A wire shorted to ground between the PCM and the transmission range switch • Poor ground G101
Cruise control main switch signal	Cruise control main switch pressed and released	CRUISE MASTER (MAIN) SW should indicate ON when the cruise control main switch is pressed and OFF when the cruise control main switch is released.	• Faulty cruise control main switch • An open in the wire between the gauge control module and the cruise control main switch • A wire shorted to ground between the gauge control module and the cruise control main switch
Set switch signal	Set/decel switch pressed and released	CRUISE SET SW should indicate ON when the set/decel switch is pressed and OFF when the set/decel switch is released.	• Faulty cruise control combination switch • An open in the wire between the gauge control module and the cruise control combination switch • A wire shorted to ground between the gauge control module and the cruise control combination switch

(cont'd)

Cruise Control Input Test (cont'd)

Signal to be tested	Test condition	Parameter: Desired result	Possible cause if result is not obtained
Resume switch signal	Resume/accel switch pressed and released	CRUISE RESUME SW should indicate ON when the resume/accel switch is pressed and OFF when the resume/accel switch is released.	• Faulty cruise control combination switch • An open in the wire between the gauge control module and the cruise control combination switch • A wire shorted to ground between the gauge control module and the cruise control combination switch
Cancel switch signal	Cancel switch pressed and released	CRUISE CANCEL SW should indicate ON when the cancel switch is pressed and OFF when the cancel switch is released.	• Faulty cruise control combination switch • An open in the wire between the gauge control module and the cruise control combination switch • A wire shorted to ground between the gauge control module and the cruise control combination switch
Cruise control indicator signal	Start the engine, press the cruise control main switch on, and drive the vehicle to speeds over 25 mph (40 km/h). Set and cancel the cruise control.	CRUISE INDICATOR should indicate ON when the cruise control is set and OFF when the cruise control is canceled.	Faulty gauge control module

HONDA

Cruise Control Combination Switch Test/Replacement

SRS components are located in this area. Review the SRS component locations:

- 4-door (see page 24-19)
- 2-door (see page 24-21)

Precautions and procedures (see page 24-23) before doing repairs or service.

1. Remove the driver's airbag (see page 24-205).

2. Disconnect the cable reel subharness 20P connector.

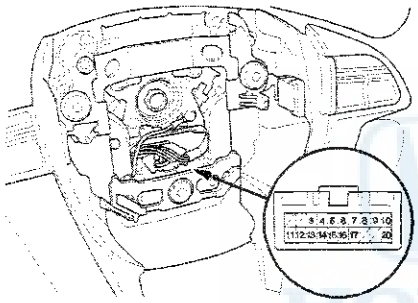

Wire side of female terminals

3. Check for continuity between the terminals in each cruise control combination switch position according to the table.

   - If there is continuity, and it matches the table, but the cruise control combination switch failure occurred on the cruise control input test, check and repair the wire harness on the switch circuit.
   - If there is no continuity in one or both positions, replace the cruise control combination switch (see page 17-25).

Terminal / Position	3		4	8	9	10		11	12
Cruise control main (ON)						○	———		○
Cruise control main (OFF)									
Set/decel (PRESSED)				○	———	———	———	○	
Resume/accel (PRESSED)					○	———	———	○	
CANCEL (PRESSED)				○	———	———	⊣	○	
					○	———	⊣		
Light (ON)	○	———	○						

Clutch Pedal Position Switch Test

M/T model

1. Disconnect the clutch pedal position switch 3P connector (A).

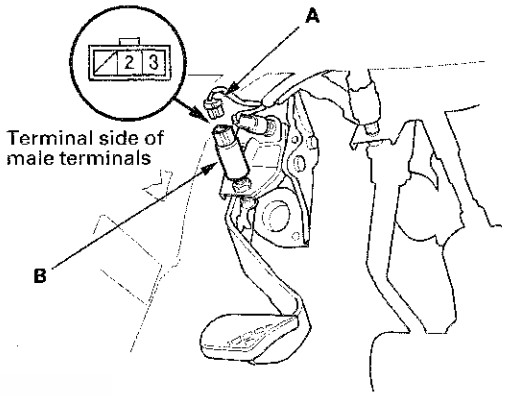

2. Remove the clutch pedal position switch (B).

3. Check for continuity between the terminals according to the table.

   - If the continuity is not as specified, replace the clutch pedal position switch (see page 12-9).
   - If OK, install the clutch pedal position switch and adjust the pedal height (see page 12-7).

Terminal / Position	1	2	3
Clutch Pedal Position Switch (PRESSED)			
Clutch Pedal Position Switch (RELEASED)		○ ———	○

Engine Mount Control System

Component Location Index

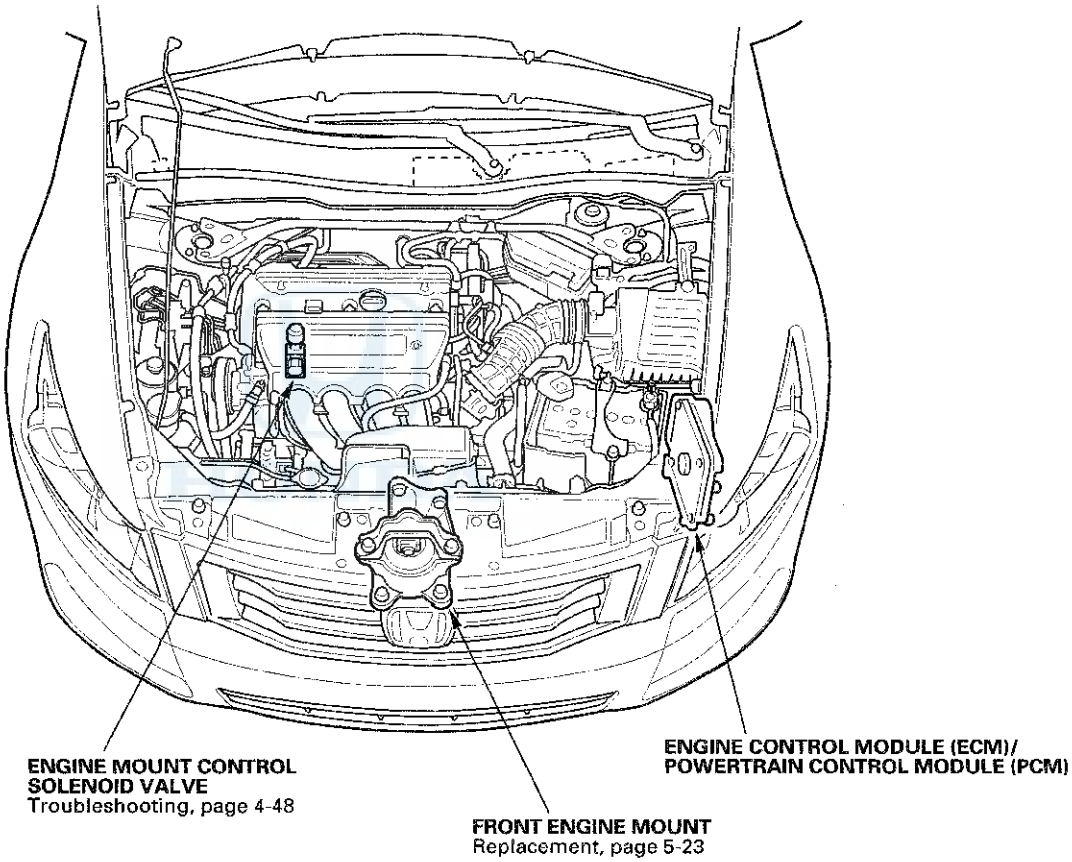

Circuit Diagram

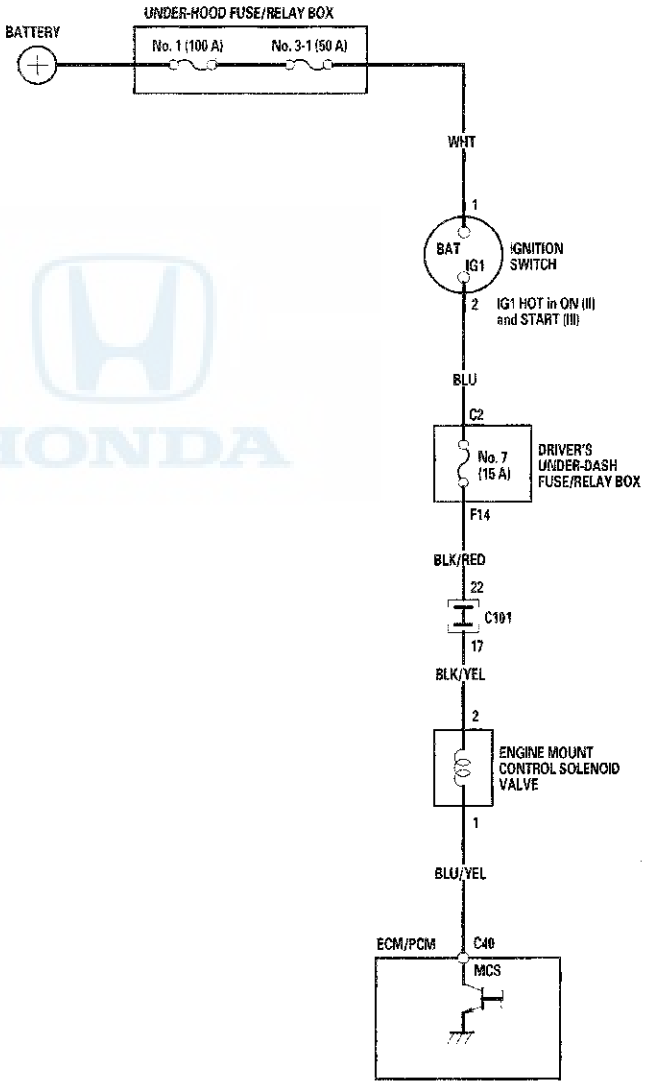

Troubleshooting

Special Tools Required
Vacuum pump/gauge, 0—30 in.Hg
Snap-on YA4000A or equivalent, commercially available

NOTE: Check the vacuum hoses and lines for damage and proper connections before troubleshooting.

Follow this procedure if the engine vibrates excessively when idling.

1. Check the idle speed (see page 11-316).

2. Raise the engine speed from idling to 2,000 rpm.

3. Check the MOUNT CTRL SOL in the PGM-FI DATA LIST with the Honda Diagnostic System (HDS).

   Is ON indicated at idling and OFF indicated at 2,000 rpm?

   YES—Go to step 4.

   NO—Update the engine control module (ECM)/powertrain control module (PCM) if it does not have the latest software (see page 11-215), or substitute a known-good ECM/PCM (see page 11-7), then recheck. If the engine mount control system works properly, and the ECM/PCM was updated, the troubleshooting is complete. If the ECM/PCM was substituted, replace the original ECM/PCM (see page 11-216).■

4. Turn the ignition switch to LOCK (0).

5. Disconnect the engine mount control solenoid valve 2P connector from the engine mount control solenoid valve.

6. Turn the ignition switch to ON (II).

7. Measure the voltage between engine mount control solenoid valve 2P connector terminal No. 2 and body ground.

ENGINE MOUNT CONTROL SOLENOID VALVE 2P CONNECTOR

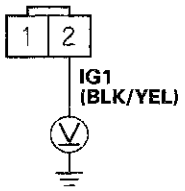

Wire side of female terminals

Is there battery voltage?

YES—Go to step 8.

NO—Repair open in the wire between engine mount control solenoid valve 2P connector terminal No. 2 and the No. 7 (15 A) fuse in the driver's under-dash fuse/relay box.■

8. Start the engine, and let it idle.

9. Measure the voltage between engine mount control solenoid valve 2P connector terminals No. 1 and No. 2 with the engine at idle.

ENGINE MOUNT CONTROL SOLENOID VALVE 2P CONNECTOR

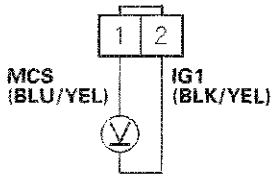

Wire side of female terminals

Is there battery voltage?

YES—Go to step 10.

NO—Repair open in the wire between ECM/PCM connector terminal C40 and engine mount control solenoid valve 2P connector terminal No. 1. If the wire is OK, update the ECM/PCM if it does not have the latest software (see page 11-215), or substitute a known-good ECM/PCM (see page 11-7), and recheck. If the engine mount control system works properly, and the ECM/PCM was updated, the troubleshooting is complete. If the ECM/PCM was substituted, replace the original ECM/PCM (see page 11-216). ■

10. Raise the engine speed above 1,000 rpm.

11. Measure the voltage between engine mount control solenoid valve 2P connector terminals No. 1 and No. 2.

ENGINE MOUNT CONTROL SOLENOID VALVE 2P CONNECTOR

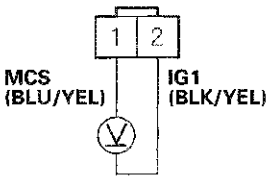

Wire side of female terminals

Is there battery voltage?

YES—Repair short to body ground in the wire between ECM/PCM connector terminal C40 and the engine mount control solenoid valve. If the wire is OK, update the ECM/PCM if it does not have the latest software (see page 11-215), or substitute a known-good ECM/PCM (see page 11-7), and recheck. If the engine mount control system works properly, and the ECM/PCM was updated, the troubleshooting is complete. If the ECM/PCM was substituted, replace the original ECM/PCM (see page 11-216). ■

NO—Go to step 12.

12. Turn the ignition switch to LOCK (0).

(cont'd)

Troubleshooting (cont'd)

13. Disconnect the upper vacuum hose (A) from the engine mount control solenoid valve (B), and connect a vacuum pump/gauge, 0—30 in.Hg, to the hose. Apply about 20 in.Hg of vacuum, and wait 20 seconds.

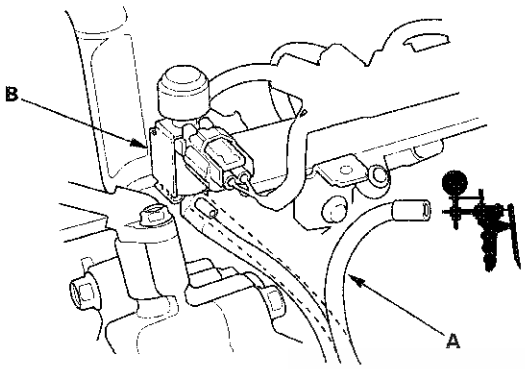

Does the engine mount hold vacuum?

YES—Go to step 14.

NO—Either the vacuum hose or the engine mount has a vacuum leak. Repair as needed. ■

14. Release the vacuum, then apply vacuum again.

Is there a noticeable change in idle smoothness with and without vacuum applied?

YES—Go to step 15.

NO—Replace the front engine mount. ■

15. Connect a vacuum pump/gauge, 0—30 in.Hg, to the engine mount control solenoid valve (A).

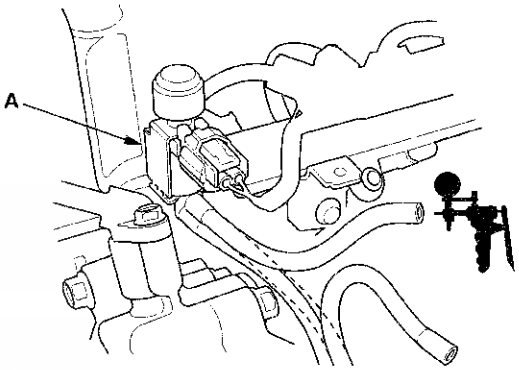

Is there manifold vacuum at idle, and a decrease in manifold vacuum when you raise the engine speed above 1,000 rpm?

YES—The system is OK. ■

NO—Replace the engine mount control solenoid valve. ■

Navigation Tools: Click on the “Table of Contents” below, or use the Bookmarks to the left.

Engine Mechanical

Engine Assembly

Special Tools 5-2
Engine Removal 5-3
Engine Installation 5-12
Engine Mount Replacement 5-23

Cylinder Head 6-1

Engine Block 7-1

Engine Lubrication 8-1

Intake Manifold and Exhaust System 9-1

Engine Assembly

Special Tools

Ref. No.	Tool Number	Description	Qty
①	07AAK-SNAA120	Universal Eyelet	1
②	070AG-SJAA10S	Subframe Alignment Pin	1

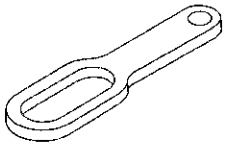

①

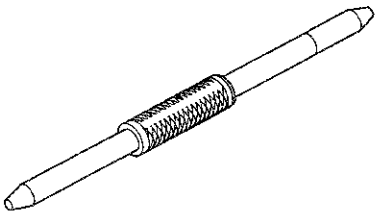

②

Engine Removal

Special Tools Required
- Engine hanger adapter VSB02C000015 *
- Engine support hanger, A and Reds AAR-T1256 *
- Front subframe adapter VSB02C000016 *
- Universal eyelet 07AAK-SNAA120

* : These special tools are available through the Honda Tool and Equipment Program, 888-424-6857

NOTE:
- Use fender covers to avoid damaging painted surfaces.
- To avoid damaging the wiring and terminals, unplug the wiring connectors carefully while holding the connector portion.
- Mark all wiring and hoses to avoid misconnection. Also, be sure that they do not contact other wiring or hoses, or interfere with other parts.

1. Remove the hood support rod, then use it as shown to prop the hood in the wide-open position.

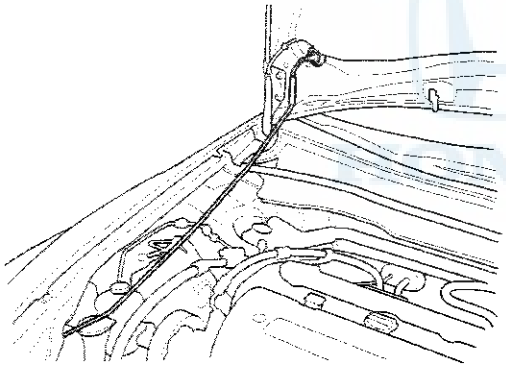

2. Remove the front grille cover:
   - 2-door (see page 20-257)
   - 4-door (see page 20-257)
3. Remove the strut brace (if equipped) (see page 20-289).
4. Relieve the fuel pressure (see page 11-332).
5. Do the battery removal procedure (see page 22-90).
6. Remove the intake air duct (see step 2 on page 10-12).
7. Remove the air cleaner assembly (see page 11-359).
8. Remove the harness clamps (A), then remove the battery base (B).

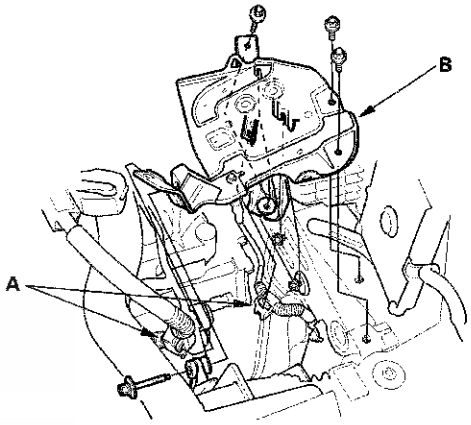

9. Remove the water separator (see step 3 on page 9-3).
10. Disconnect the battery cables (A) from the under-hood fuse/relay box.

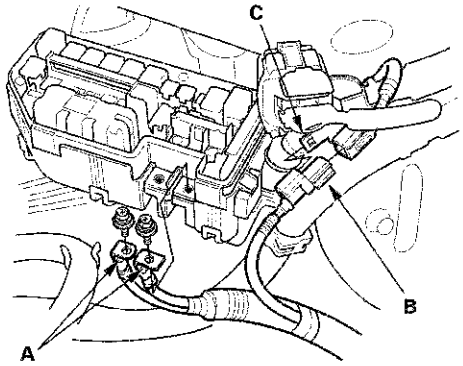

11. Disconnect the harness connector (B), and remove the harness connector from the bracket (C).

(cont'd)

Engine Removal (cont'd)

12. Remove the engine control module (ECM)/ powertrain control module (PCM) cover (A), then remove the three bolts (B) securing the ECM/PCM.

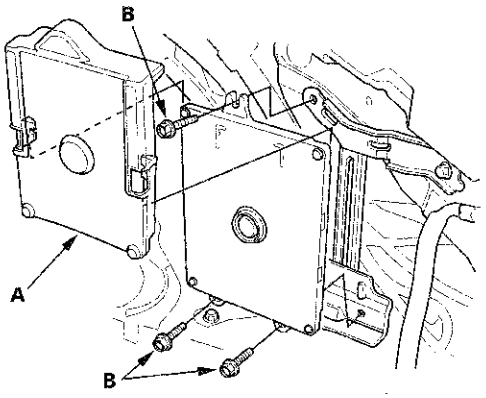

13. Disconnect the ECM/PCM connectors (A) and the engine wire harness connector (B).

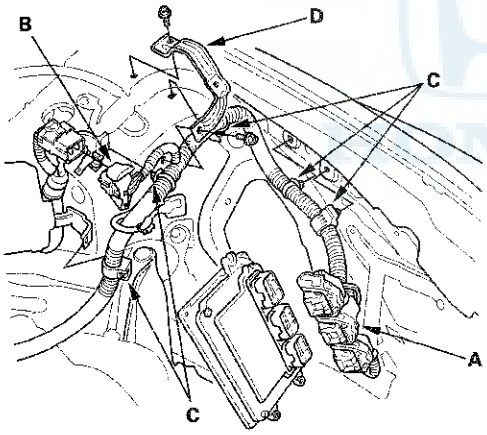

14. Remove the harness clamps (C) and the bracket (D).

15. Disconnect the evaporative emission (EVAP) canister hose (A) and the brake booster vacuum hose (B).

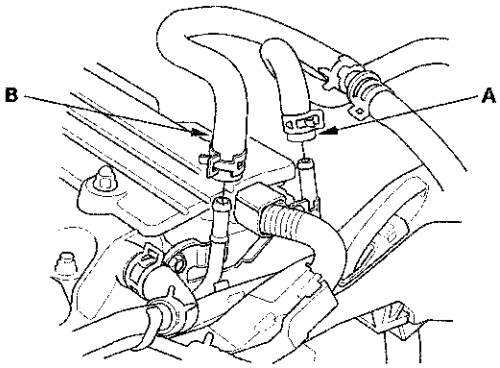

16. Remove the quick-connect fitting cover (A), then disconnect the fuel feed hose (B) (see page 11-340).

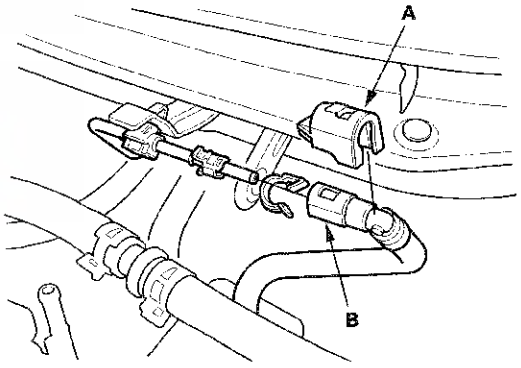

17. Remove the drive belt (see page 4-30).

18. Remove the power steering (P/S) pump (A) without disconnecting the P/S hoses, and the P/S hose bracket (B).

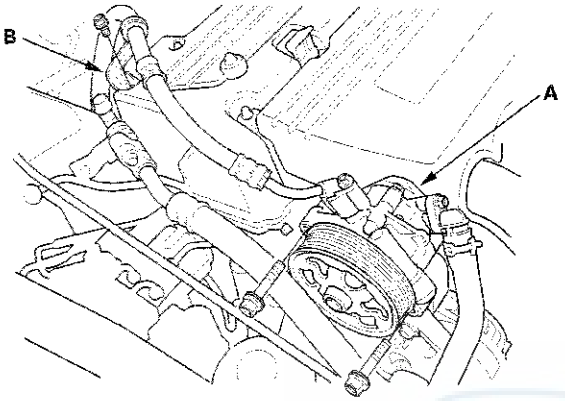

19. Wait until the engine is cool, then carefully remove the radiator cap.

20. Remove the A/C condenser fan shroud assembly (see page 10-13).

21. M/T model: Remove the three bolts securing the shift cable holder, then remove the shift cable and the select cable. Do not bend the cables excessively (see step 8 on page 13-8).

22. M/T model: Remove the clutch slave cylinder and the clutch line bracket mounting nut. Do not operate the clutch pedal once the slave cylinder has been removed (see step 6 on page 13-7).

23. Raise the vehicle on the lift.

24. Remove the front wheels.

25. Remove the splash shield.

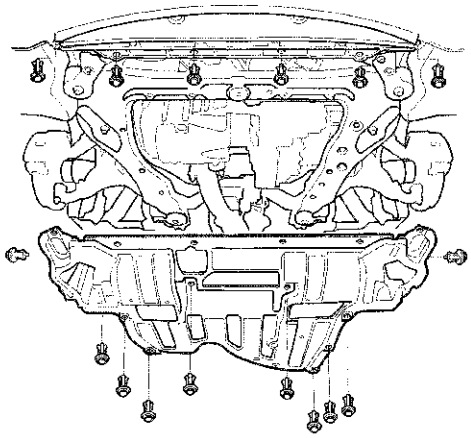

26. Loosen the drain plug in the radiator, and drain the engine coolant (see page 10-6).

27. Drain the engine oil (see page 8-9).

28. Drain the transmission fluid:

- Manual transmission (see page 13-5)
- Automatic transmission (see page 14-231)

29. Remove exhaust pipe A.

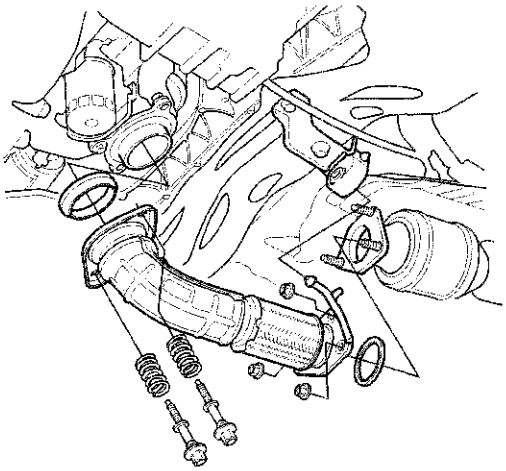

(cont'd)

Engine Removal (cont'd)

30. A/T model: Remove the shift cable:

    - For Saitama Factory-produced models (see step 44 on page 14-238).
    - For Marysville, Ohio Factory-produced models (see step 46 on page 14-239).

31. Remove the damper fork (see page 18-31).

32. Separate the knuckles from the lower arms (see page 18-14).

33. Remove the driveshafts (see page 16-4). Coat all precision-finished surfaces with new engine oil. Tie a plastic bag over the driveshaft ends.

34. Remove the bolt (A) securing the P/S fluid line bracket, and unclamp the P/S fluid line clamp (B) on the front subframe.

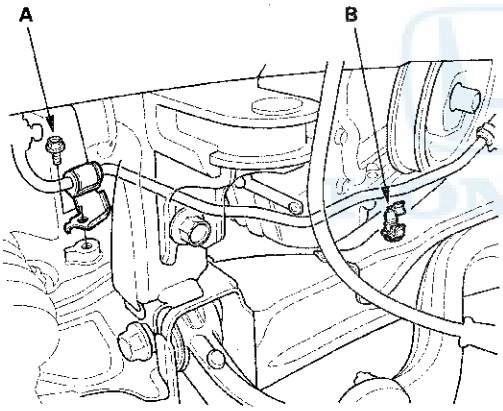

35. Remove the bolts securing the steering gearbox mounting bracket (A) and the heat shield (B). (right side)

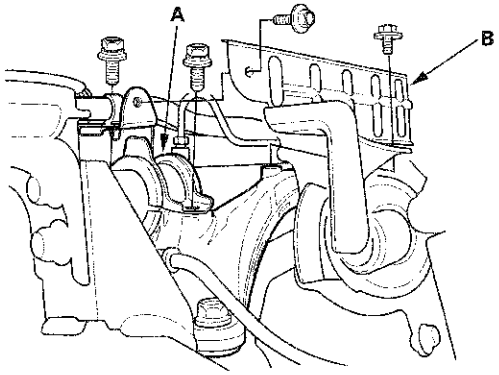

36. Lower the vehicle on the lift.

37. Remove the two bolts (A) securing the P/S fluid line brackets.

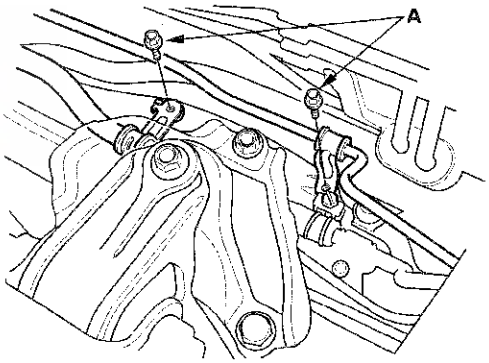

38. Remove the bolts securing the steering gearbox stiffeners (A) and the washers (B). (left side)

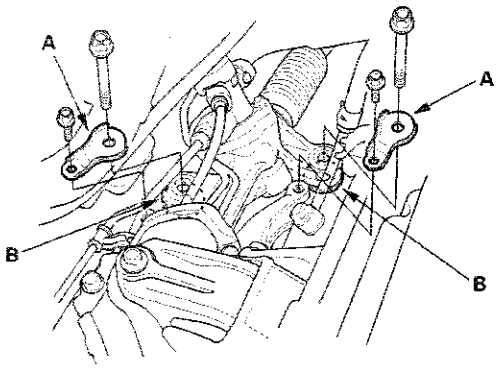

39. A/T model: Disconnect the ATF cooler hoses, then plug the lines and hoses.

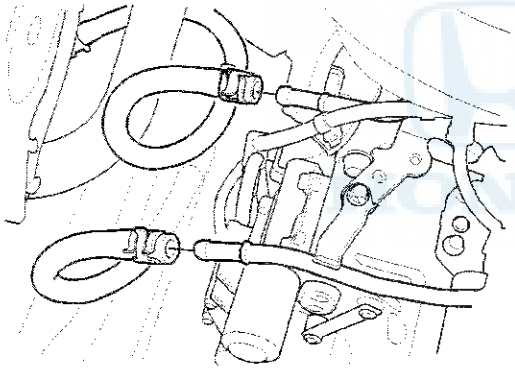

40. Disconnect the heater hoses (A) and the upper radiator hose (B).

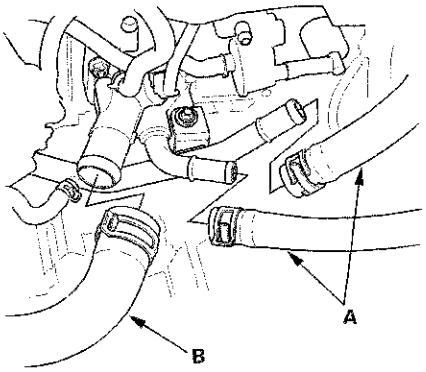

41. Disconnect the quick connector from the thermostat cover (see step 3 on page 10-8).

42. Attach the engine hanger adapter (VSB02C000015) to the threaded hole in the cylinder head.

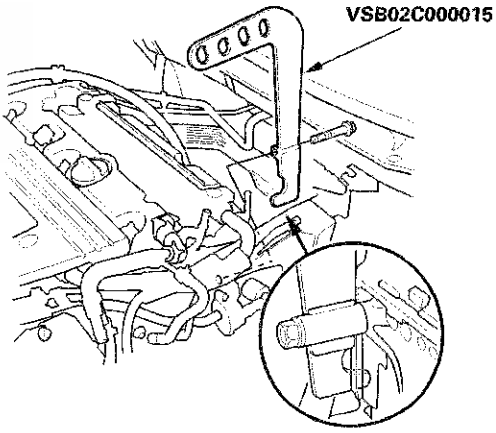

(cont'd)

Engine Removal (cont'd)

43. Install the engine support hanger (AAR-T1256), then attach the hook to the slotted hole in the engine hanger adapter. Tighten the wing nut (A) by hand to lift and support the engine/transmission.

    NOTE: Be careful when working around the windshield.

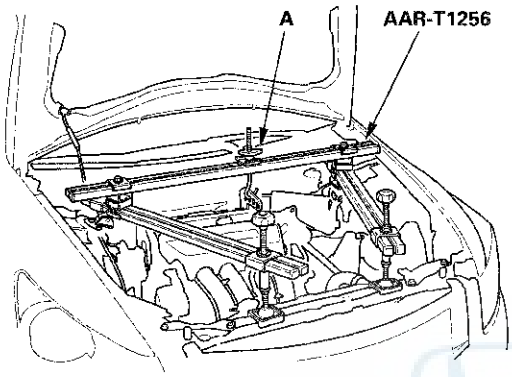

44. Disconnect the vacuum hose (A) and remove the front engine mount stop (B), then remove the front engine mount bolt (C).

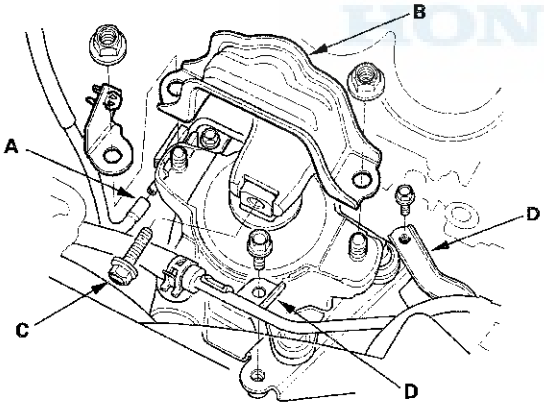

45. A/T model: Remove the ATF cooler pipe brackets (D).

46. M/T model: Remove the rear engine mount.

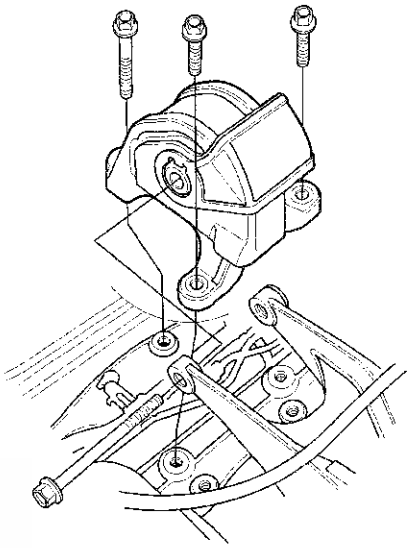

47. A/T model: Remove the rear engine mount (A), then remove the rear engine mount upper bracket (B).

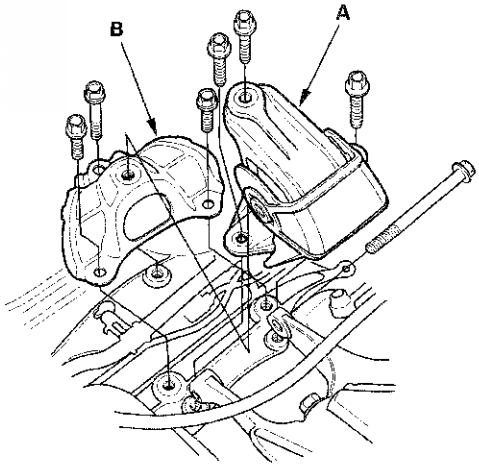

48. Raise the vehicle on the lift.

49. Remove the nuts securing the lower transmission mount.

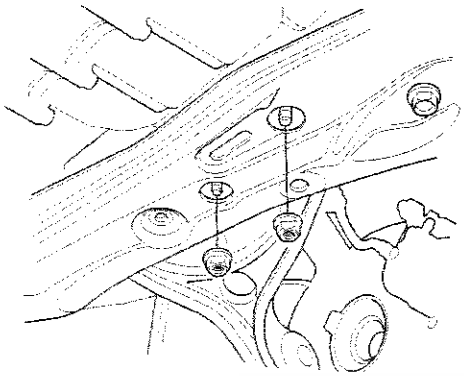

50. Disconnect the A/C compressor clutch connector (A), then remove the A/C compressor (B) without disconnecting the A/C hoses. Do not bend the A/C hoses excessively.

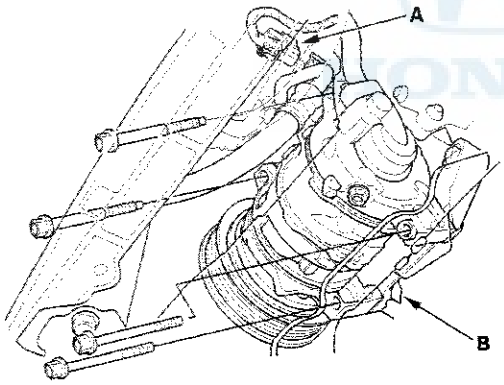

51. Remove the subframe middle mounts.

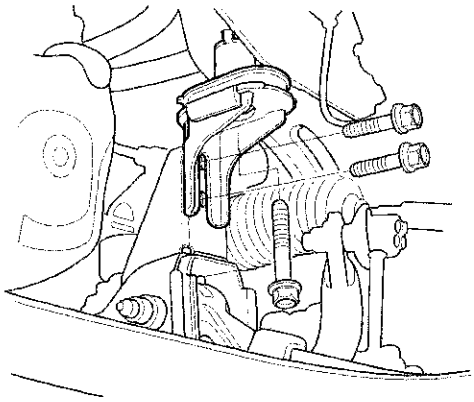

52. Attach the front subframe adapter (VSB02C000016) to the subframe and hang the belt (A) of the subframe adapter over the front of the subframe (B), then secure the belt with its stop (C).

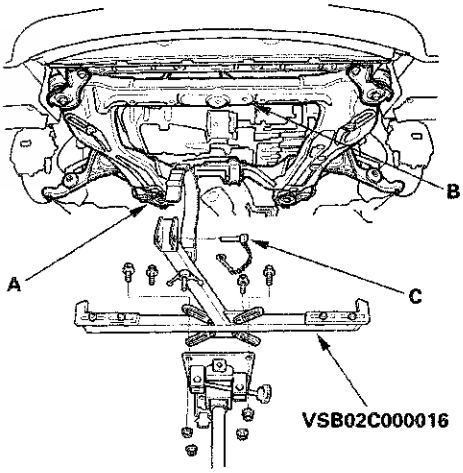

53. Raise the jack and line up the slots in the front subframe adapter arms with the bolt holes on the jack base, then securely attach them with four bolts.

(cont'd)

Engine Removal (cont'd)

54. Remove the four 12 x 1.25 mm bolts (A), the front subframe mounting bolts (B) securing four stiffeners (C), then lower the front subframe (D).

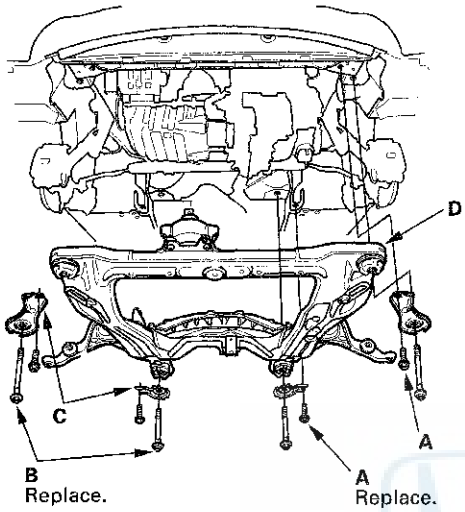

55. Lower the vehicle on the lift.

56. Support the engine with a jack and a wood block under the oil pan.

57. Remove the ground cable (A).

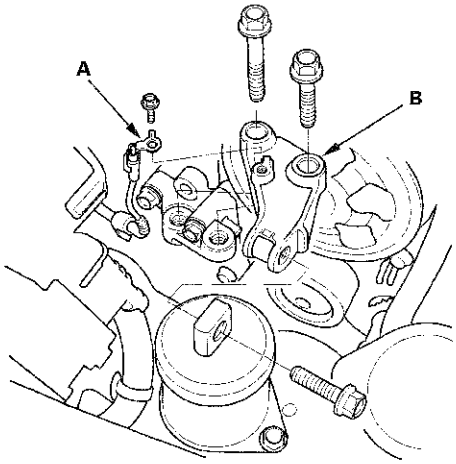

58. Remove the side engine mount bracket (B).

59. Install the universal eyelet (07AAK-SNAA120).

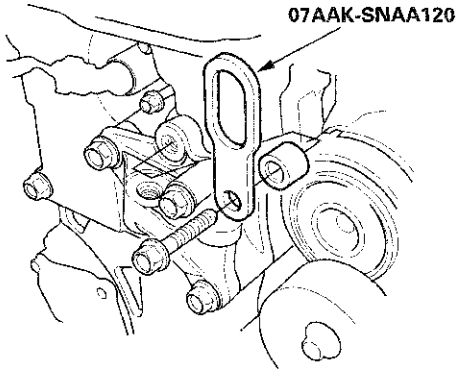

60. Attach a chain hoist (A) to the universal eyelet (B), and the transmission hook (C), then lift the engine/transmission until it is securely supported by the chain hoist, and remove the engine support hanger.

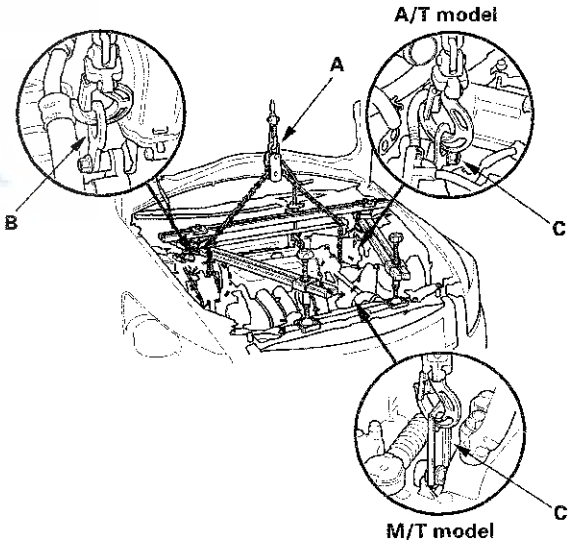

61. Remove the upper transmission mount bracket mounting bolts.

NOTE: Do not remove the TORX bolt (A) from the upper transmission mount. If the TORX bolt is removed, the upper transmission mount must be replaced as an assembly.

M/T model

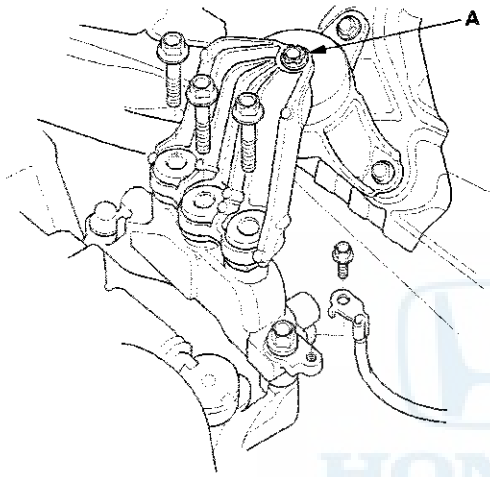

A/T model

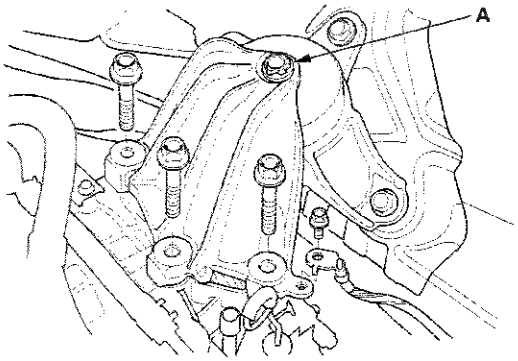

62. Remove the ground cable.

63. Check that the engine/transmission is completely free of vacuum hoses, fuel hoses, coolant hoses, and electrical wiring.

64. Slowly lower the engine/transmission about 150 mm (6 in.). Check once again that all hoses and electrical wiring are disconnected and free from the engine/transmission, then lower it all the way.

65. Disconnect the chain hoist from the engine/transmission.

66. Raise the vehicle, and remove the engine/transmission from under the vehicle.

Engine Assembly

Engine Installation

Special Tools Required
- Universal eyelet 07AAK-SNAA120
- Engine hanger adapter VSB02C000015 *
- Engine support hanger, A and Reds AAR-T1256 *
- Front subframe adapter VSB02C000016 *
- Subframe alignment pin 070AG-SJAA10S

* : These special tools are available through the Honda Tool and Equipment Program, 888-424-6857

1. Install the engine mount brackets and the accessory brackets, then tighten their bolts to the specified torque.

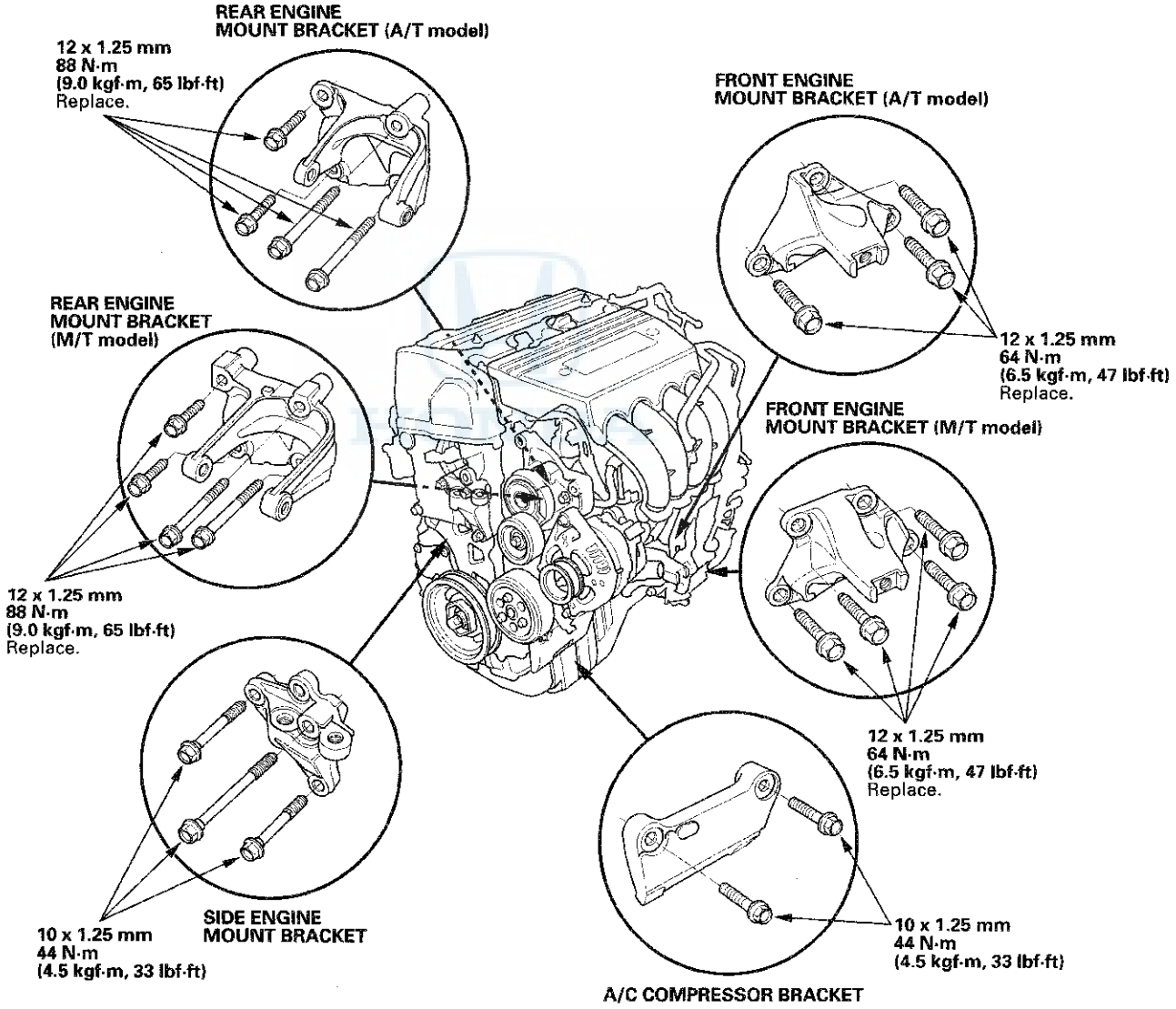

2. Raise the vehicle on the lift, and position the engine/transmission under the vehicle. Lower the vehicle, and install the universal eyelet (07AAK-SNAA120). Attach a chain hoist to the universal eyelet and the transmission hook, then lift the engine into position in the vehicle.

   NOTE: Reinstall the mounting bolts and support nuts in the sequence given in the following steps. Failure to follow this sequence may cause excessive noise and vibration, and reduce engine mount life.

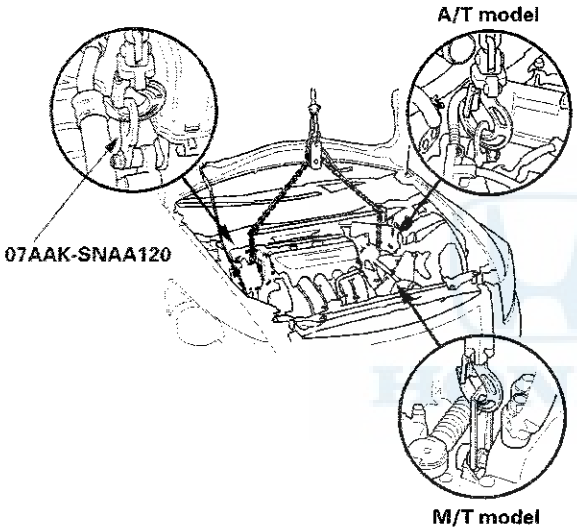

3. Attach the engine hanger adapter (VSB02C000015) to the threaded hole in the cylinder head.

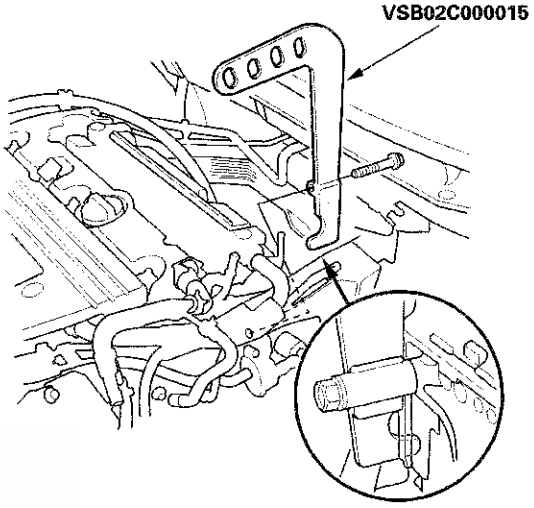

4. Install the engine support hanger (AAR-T1256), then attach the hook to the slotted hole in the engine hanger adapter. Tighten the wing nut (A) by hand to lift and support the engine/transmission.

   NOTE: Be careful when working around the windshield.

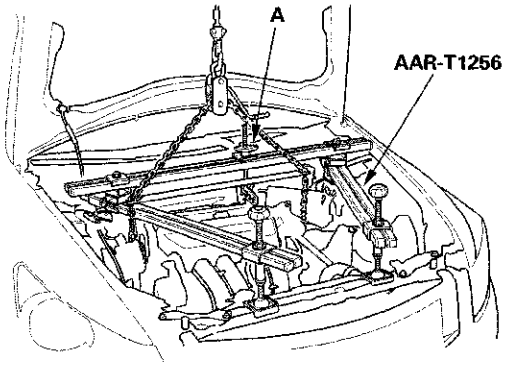

(cont'd)

Engine Installation (cont'd)

5. Tighten the upper transmission mount bracket mounting bolts to the specified torque.

M/T model

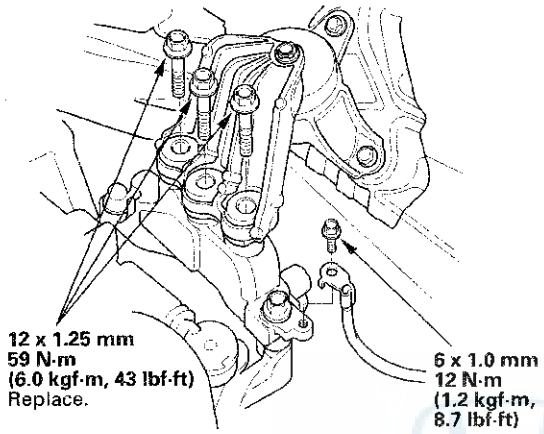

A/T model

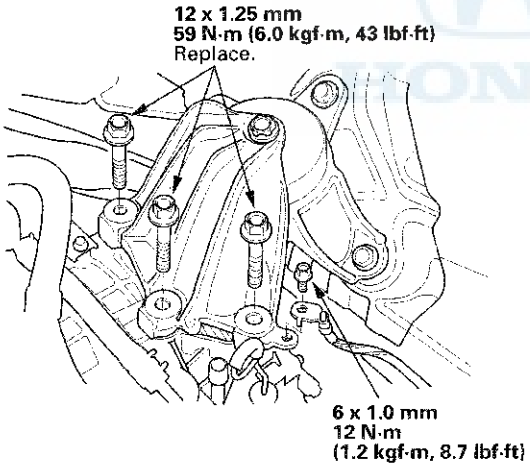

6. Install the ground cable.

7. Support the engine with a jack and a wood block under the oil pan.

8. Remove the chain hoist.

9. Remove the universal eyelet.

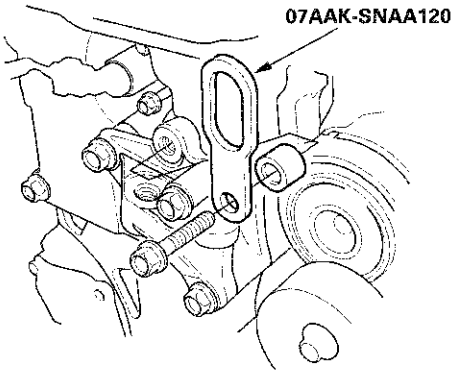

10. Install the side engine mount bracket, then tighten the side engine mount bracket mounting bolts in the numbered sequence shown.

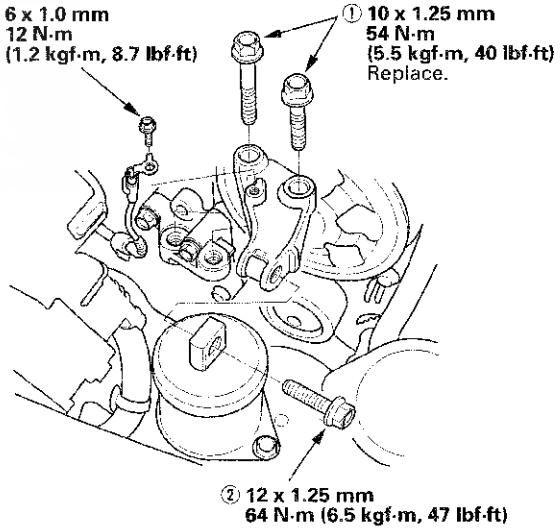

11. Install the ground cable.

12. Raise the vehicle on the lift.

13. Using the front subframe adapter (VSB02C000016) and a jack, raise the front subframe up to the body.

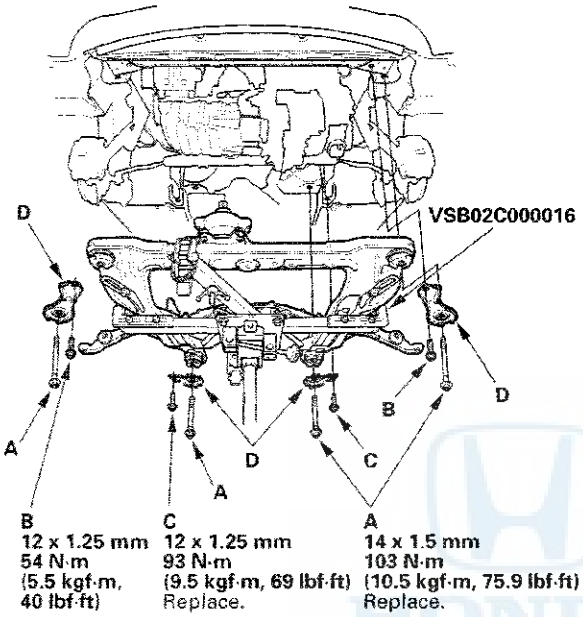

14. Loosely install the new front subframe mounting bolts (four) (A), the 12 x 1.25 mm bolts (four) (B) (C), and the stiffeners (four) (D).

15. Loosely install the subframe middle mount.

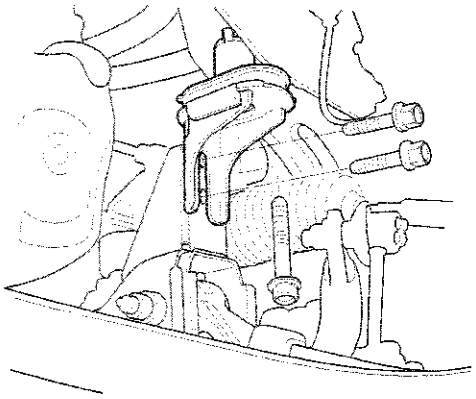

16. Remove the jack and the front subframe adapter.

17. Insert the subframe alignment pin (070AG-SJAA10S) through the positioning slot (A) on the right rear stiffener, through the positioning hole (B) on the subframe, and into the positioning hole (C) on the body, then loosely tighten the subframe right rear mounting bolt.

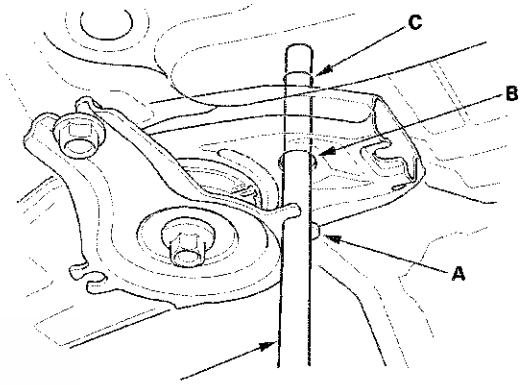

070AG-SJAA10S
NOTE: Use 15.7 mm side.

18. Insert the subframe alignment pin through the positioning slot on the left rear stiffener, through the positioning hole on the subframe, and into the positioning hole on the body, then loosely tighten the subframe left rear mounting bolt.

19. Using the subframe alignment pin in place, tighten the right rear mounting bolt.

20. Using the subframe alignment pin in place, tighten the left rear mounting bolt.

21. Tighten the stiffener mounting bolts to the specified torque.

22. Tighten the front and rear subframe mounting bolts to the specified torque.

23. Check that the positioning slots on the right/left rear stiffener, the positioning holes on the subframe, and the positioning holes on the body are aligned using the subframe alignment pin.

(cont'd)

Engine Installation (cont'd)

24. Tighten the bolts securing the subframe middle mounts.

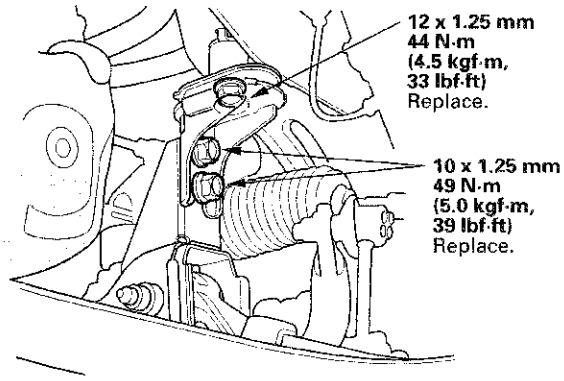

25. Tighten the nuts securing the lower transmission mount.

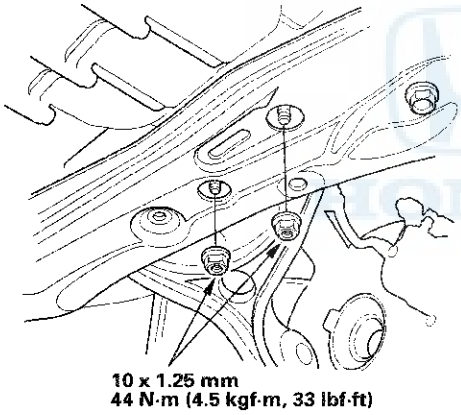

26. Lower the vehicle on the lift.

27. Remove the engine support hanger and the engine hanger adapter.

28. Tighten the front engine mount bolt (A), then install the front engine mount stop (B) and connect the vacuum hose (C).

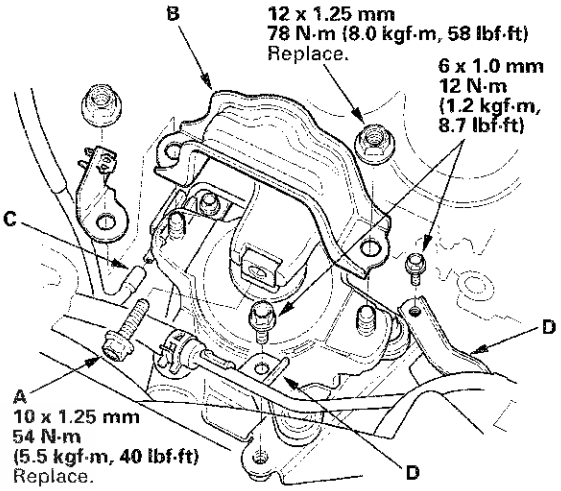

29. A/T model: Install the ATF cooler pipe brackets (D).

30. M/T model: Install the rear engine mount.

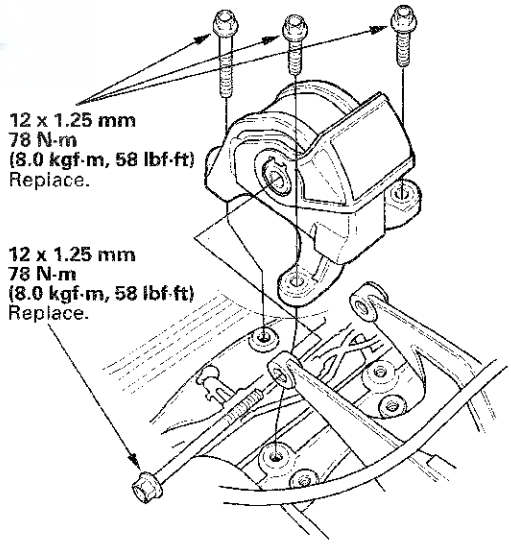

31. A/T model: Install the rear engine mount upper bracket (A), then install the rear engine mount (B).

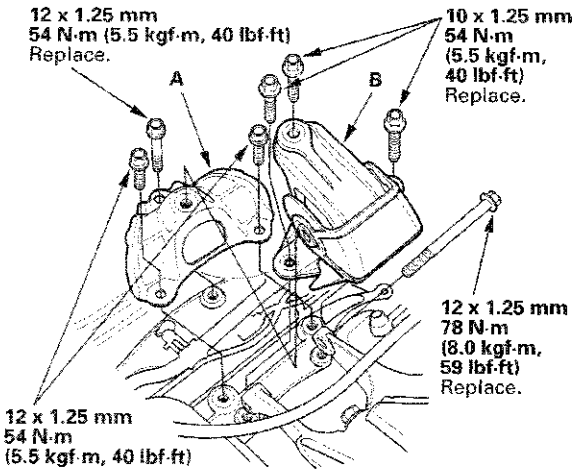

32. Loosen the mounting bolts for the side engine mount bracket, then retighten the bolts in the numbered sequence shown.

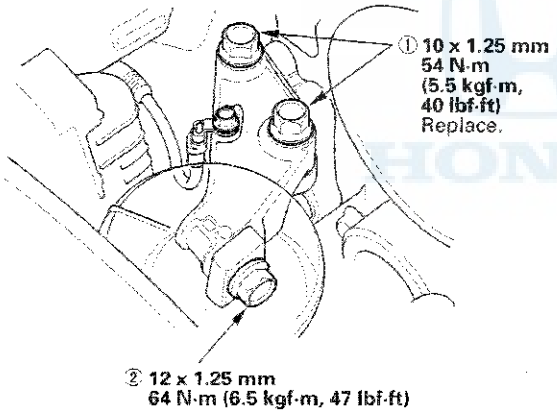

33. Loosen the mounting bolts for the upper transmission mount bracket, then retighten them to the specified torque.

M/T model

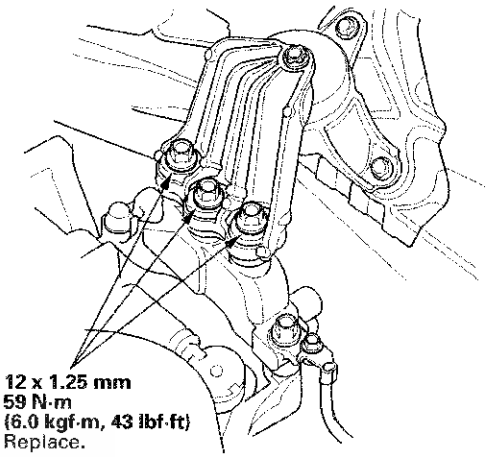

A/T model

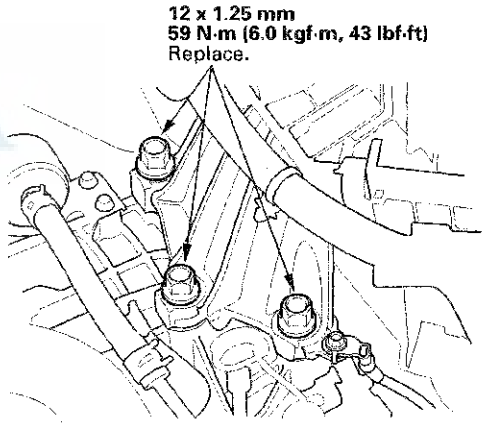

(cont'd)

Engine Installation (cont'd)

34. Connect the quick connector to the thermostat cover (see step 11 on page 10-8).

35. Connect the heater hoses (A) and the upper radiator hose (B).

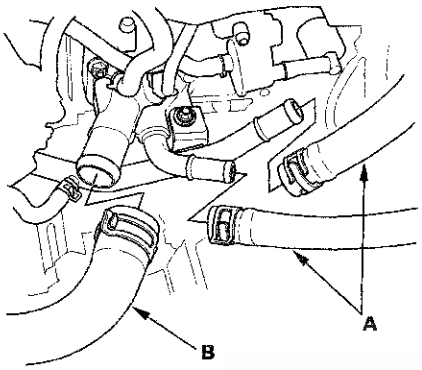

36. A/T model: Connect the ATF cooler hoses (A), and secure the hoses with the clips (B) (see page 14-260).

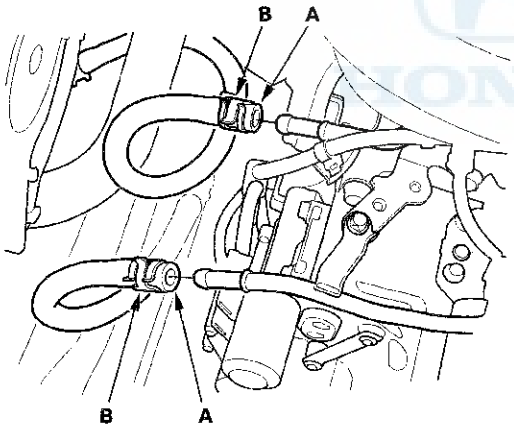

37. Install the bolts securing the steering gearbox stiffeners (A) and the washers (B). (left side)

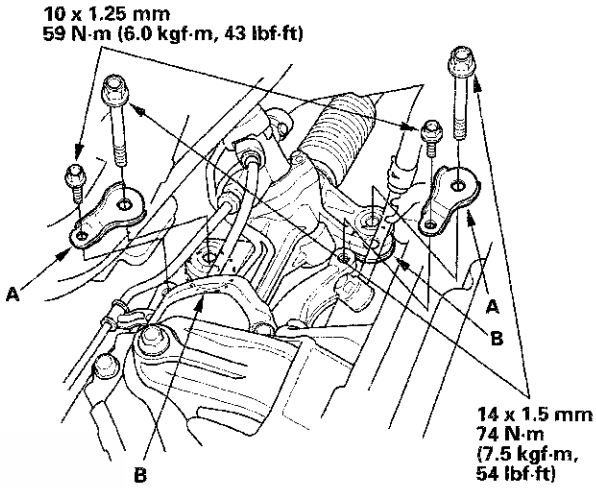

38. Install the two bolts (A) securing the power steering (P/S) fluid line brackets.

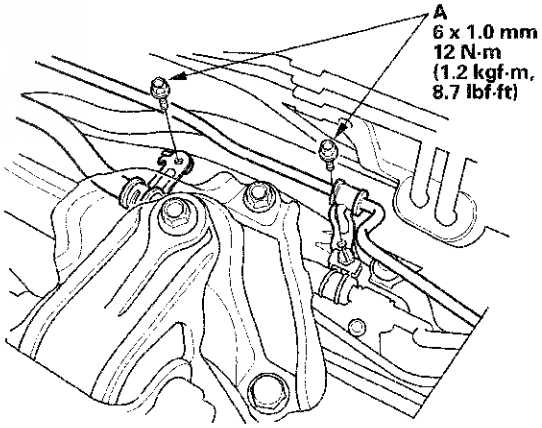

39. Raise the vehicle on the lift.

40. Install the bolts securing the steering gearbox mounting bracket (A) and the heat shield (B). (right side)

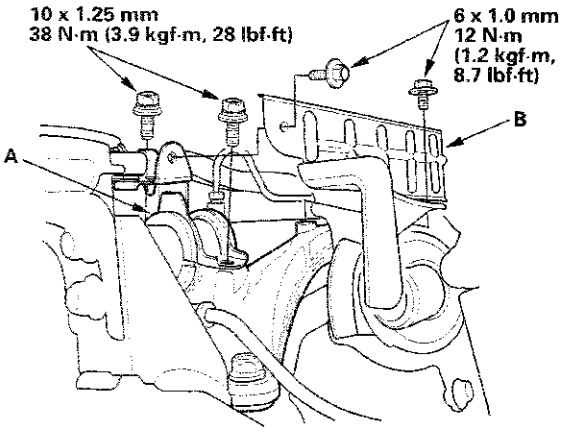

41. Install the P/S fluid line bracket (A), and secure the hose with the hose clamp (B).

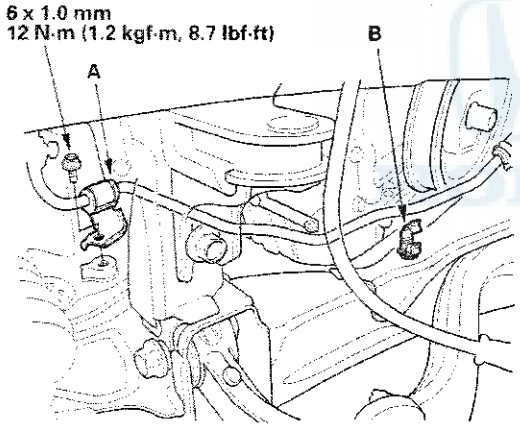

42. Install the A/C compressor (A), then connect the A/C compressor clutch connector (B).

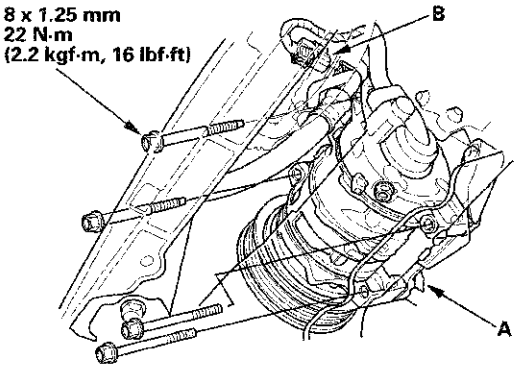

43. Install a new set ring on the end of each driveshaft, then install the driveshafts (see page 16-20). Make sure each ring "clicks" into place in the differential and the intermediate shaft.

44. Connect the lower arms to the knuckles (see step 5 on page 18-21).

45. Install the damper fork (see step 3 on page 18-21).

46. A/T model: Install the shift cable:

- For Saitama Factory-produced models (see step 32 on page 14-248).
- For Marysville, Ohio Factory-produced models (see step 35 on page 14-249).

(cont'd)

Engine Installation (cont'd)

47. Install exhaust pipe A using new gaskets (B) and new self-locking nuts (C).

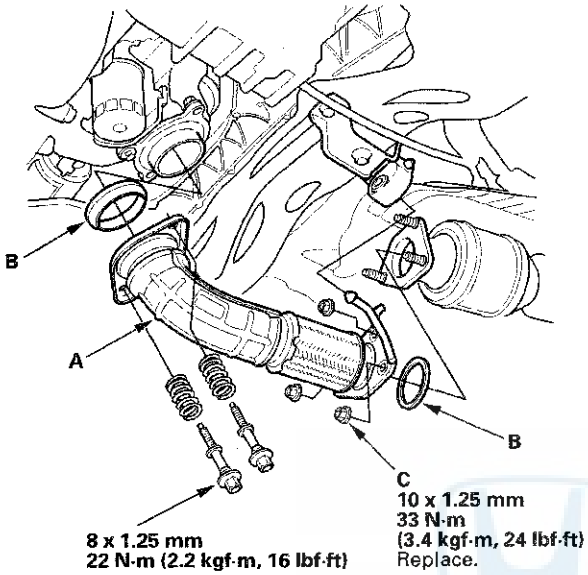

48. Install the splash shield.

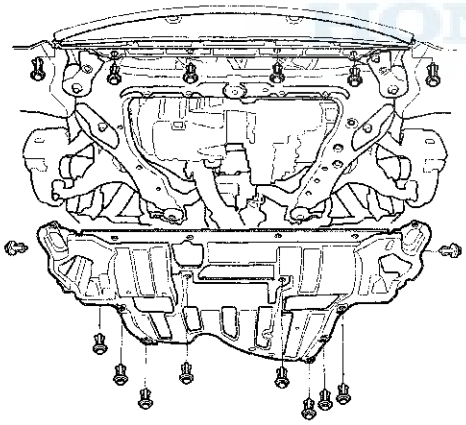

49. Install the front wheels.

50. Lower the vehicle on the lift.

51. M/T model: Install the clutch slave cylinder and the clutch line bracket mounting nut (see step 49 on page 13-23).

52. M/T model: Install the shift cable and the select cable, then tighten the three bolts securing the shift cable holder (see step 47 on page 13-23).

53. Install the A/C condenser fan shroud assembly (see page 10-13).

54. Install the P/S pump (A), and the P/S hose bracket (B).

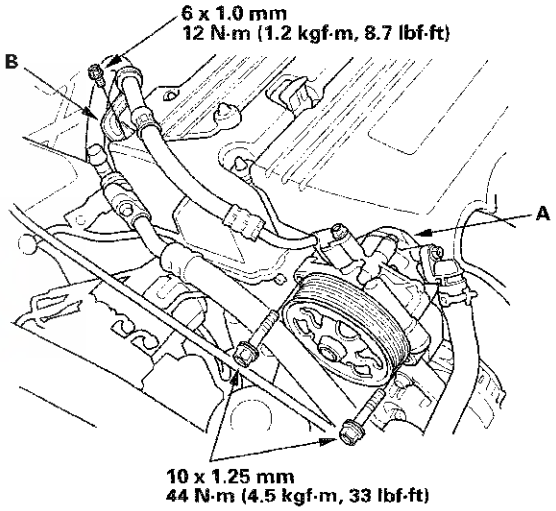

55. Install the drive belt (see page 4-30).

56. Connect the fuel feed hose (A) (see page 11-343), then install the quick-connect fitting cover (B).

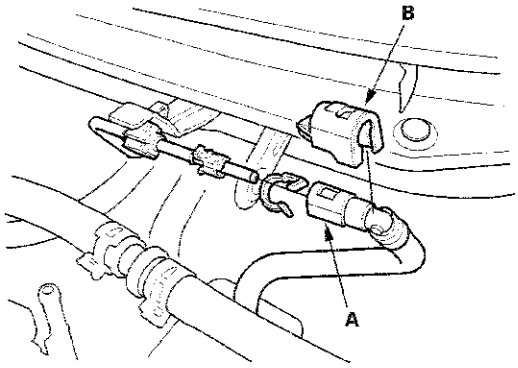

57. Connect the evaporative emission (EVAP) canister hose (A) and the brake booster vacuum hose (B).

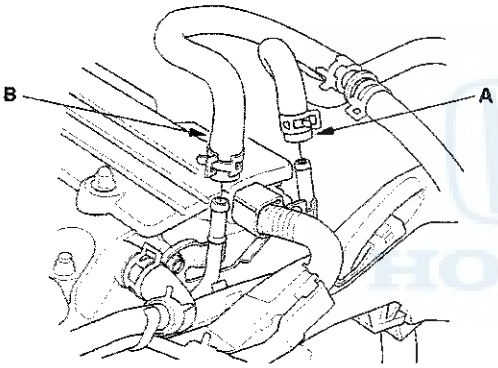

58. Connect the engine control module (ECM)/ powertrain control module (PCM) connectors (A) and the engine wire harness connector (B).

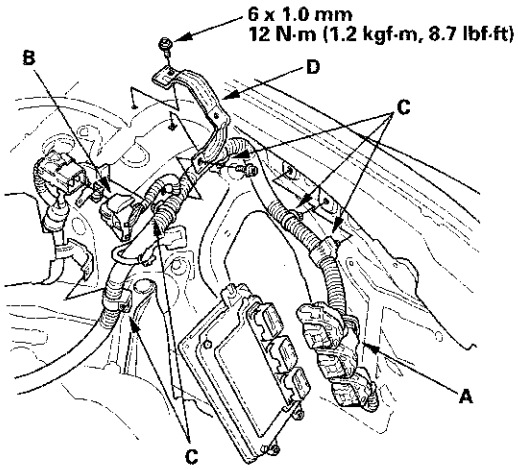

59. Install the harness clamps (C) and the bracket (D).

60. Install the ECM/PCM (A), then install the ECM/PCM cover (B).

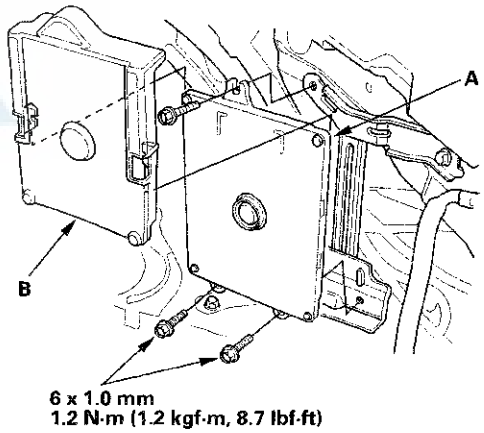

(cont'd)

Engine Installation (cont'd)

61. Connect the battery cables (A) to the under-hood fuse/relay box.

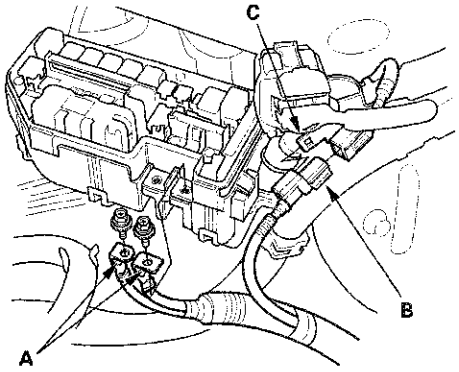

62. Connect the harness connector (B), and install the harness connector to the bracket (C).

63. Install the water separator (see step 10 on page 9-7).

64. Install the battery base (A), then install the harness clamps (B).

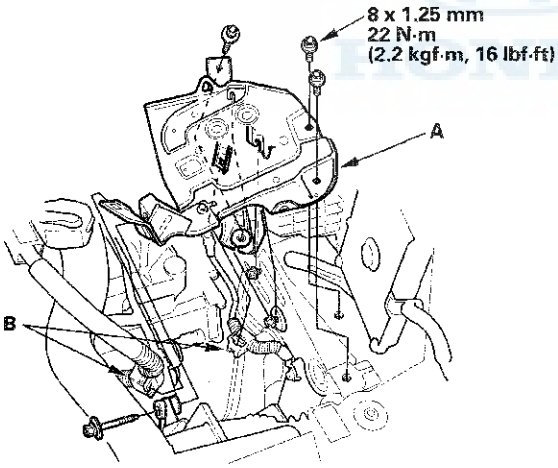

65. Install the air cleaner assembly (see page 11-359).

66. Install the intake air duct (see step 2 on page 10-12).

67. Install the strut brace (if equipped) (see page 20-289).

68. Install the front grille cover:

- 2-door (see page 20-257)
- 4-door (see page 20-257)

69. Do the battery installation procedure (see page 22-90).

70. Inspect for fuel leaks. Turn the ignition switch to ON (II) (do not operate the starter) so the fuel pump runs for about 2 seconds and pressurizes the fuel line. Repeat this operation three times, then check for fuel leakage at any point in the fuel line.

71. Refill the engine with the recommended engine oil (see step 4 on page 8-9).

72. Refill the transmission with fluid:

- Manual transmission (see page 13-5)
- Automatic transmission (see page 14-231)

73. A/T model: Move the shift lever to each gear, and verify that the A/T gear position indicator follows the transmission range switch.

74. M/T model: Check that the transmission shifts into all gears smoothly.

75. Refill the radiator with engine coolant, and bleed the air from the cooling system with the heater valve open (see step 6 on page 10-6).

76. Do the ECM/PCM reset procedure (see page 11-4).

77. Do the ECM/PCM idle learn procedure (see page 11-317).

78. Do the crankshaft position (CKP) pattern clear/CKP pattern learn procedure (see page 11-5).

79. Inspect the idle speed (see page 11-316).

80. Inspect the ignition timing (see page 4-19).

81. Check the wheel alignment (see page 18-5).

Engine Mount Replacement

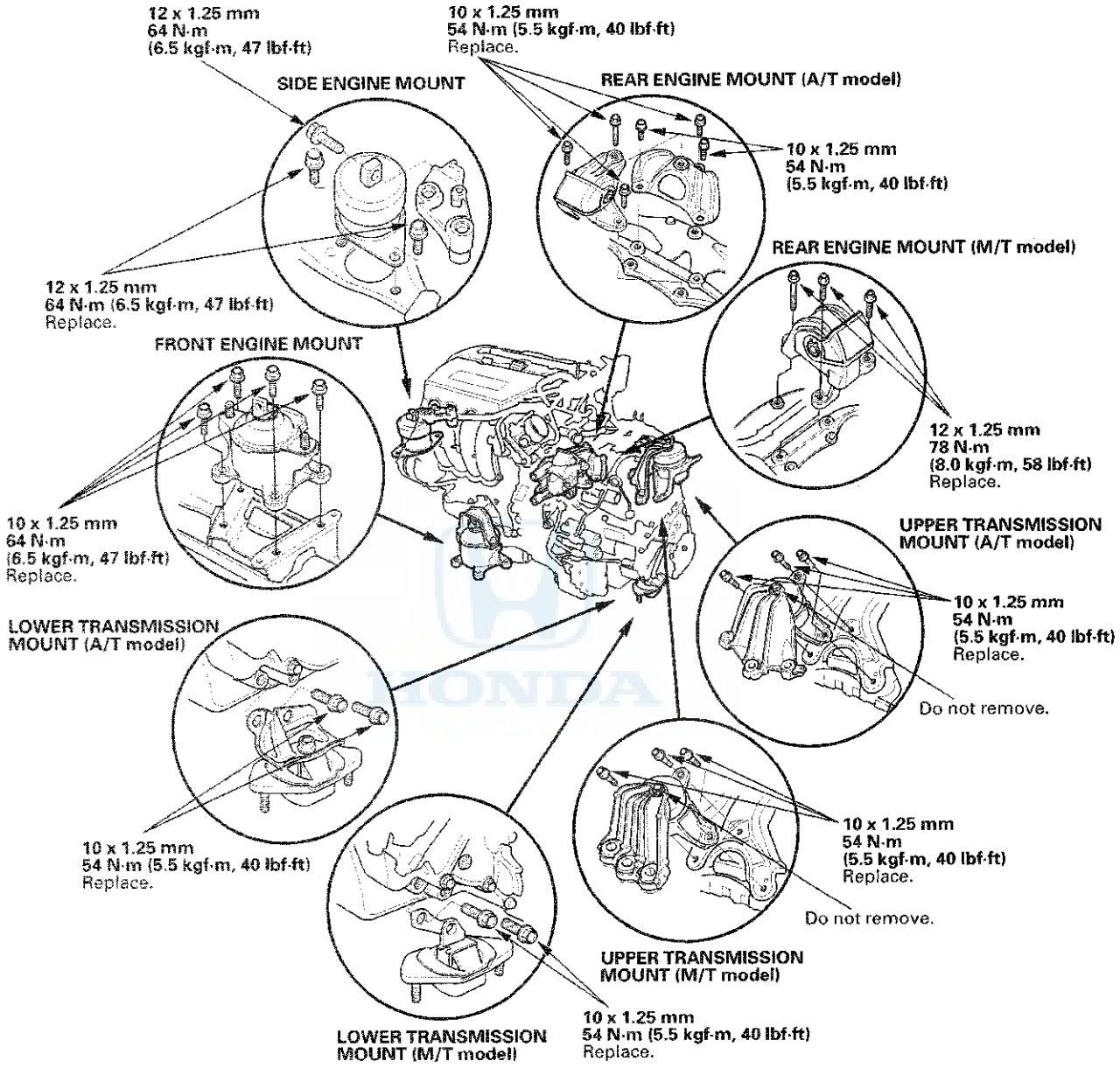

HONDA

Navigation Tools: Click on the "Table of Contents" below, or use the Bookmarks to the left.

Engine Mechanical

Cylinder Head (All Models Except PZEV)

Special Tools 6-2
Component Location Index 6-3
Engine Compression Inspection 6-6
VTEC Rocker Arm Test 6-7
VTC Actuator Inspection 6-8
Valve Clearance Adjustment 6-9
Crankshaft Pulley Removal and Installation 6-12
Cam Chain Removal 6-13
Cam Chain Installation 6-15
Auto-tensioner Removal and Installation 6-20
Chain Case Oil Seal Installation 6-22
Cam Chain Inspection 6-23
Cylinder Head Cover Removal 6-24
Cylinder Head Cover Installation 6-25
Cylinder Head Removal 6-27
CMP Pulse Plate A Replacement 6-29
CMP Pulse Plate B Replacement 6-30
VTC Actuator, Exhaust Camshaft Sprocket Replacement 6-30
Cylinder Head Inspection for Warpage 6-31
Rocker Arm Assembly Removal 6-32
Rocker Arm and Shaft Disassembly/Reassembly 6-33
Rocker Arm and Shaft Inspection 6-34
Camshaft Inspection 6-35
Valve, Spring, and Valve Seal Removal 6-37
Valve Inspection 6-38
Valve Stem-to-Guide Clearance Inspection 6-38
Valve Guide Replacement 6-39
Valve Seat Reconditioning 6-41
Valve, Spring, and Valve Seal Installation 6-42
Rocker Arm Assembly Installation 6-43
Cylinder Head Installation 6-44
Sealing Bolt Installation 6-48

Cylinder Head (PZEV Model) 6-49

Special Tools

Ref. No.	Tool Number	Description	Qty
①	07AAB-RJAA100	Crankshaft Pulley Holder	1
②	07AAB-RWCA120	Camshaft Lock Pin Set	1
③	07AAJ-PNAA101	Air Pressure Regulator	1
④	07AAJ-RWCA100	Cam Chain Inspection Gauge	1
⑤	07HAH-PJ7A100	Valve Guide Reamer, 5.5 mm	1
⑥	07JAA-001020A	Socket, 19 mm	1
⑦	07JAB-001020B	Holder Handle	1
⑧	07MAA-PR70110	Adjuster	1
⑨	07MAA-PR70120	Locknut Wrench	1
⑩	07PAD-0010000	Stem Seal Driver	1
⑪	07ZAJ-PNAA101	VTEC Air Adapter	2
⑫	07ZAJ-PNAA200	VTEC Air Stopper	1
⑬	07ZAJ-PNAA300	Air Joint Adapter	1
⑭	07742-0010100	Valve Guide Driver, 5.5 mm	1
⑮	07746-0010400	Attachment, 52 x 55 mm	1
⑯	07749-0010000	Driver	1
⑰	07757-PJ1010A	Valve Spring Compressor Attachment	1

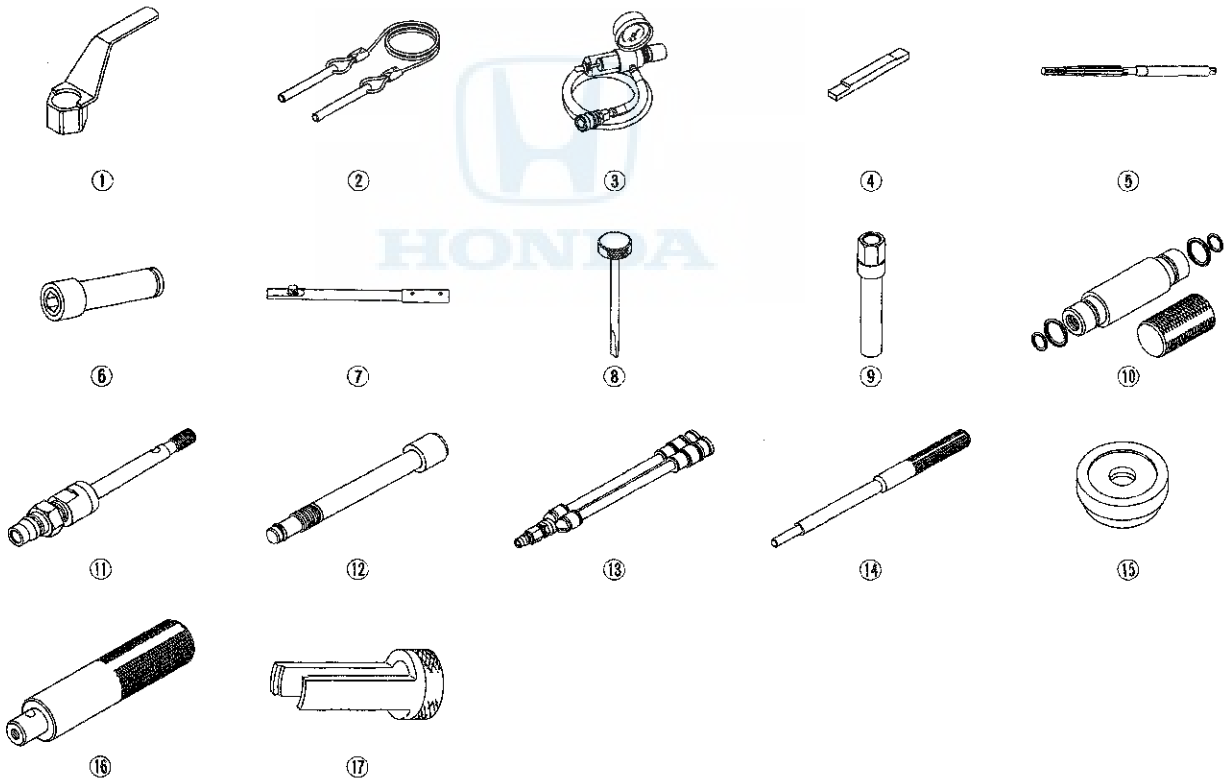

Component Location Index

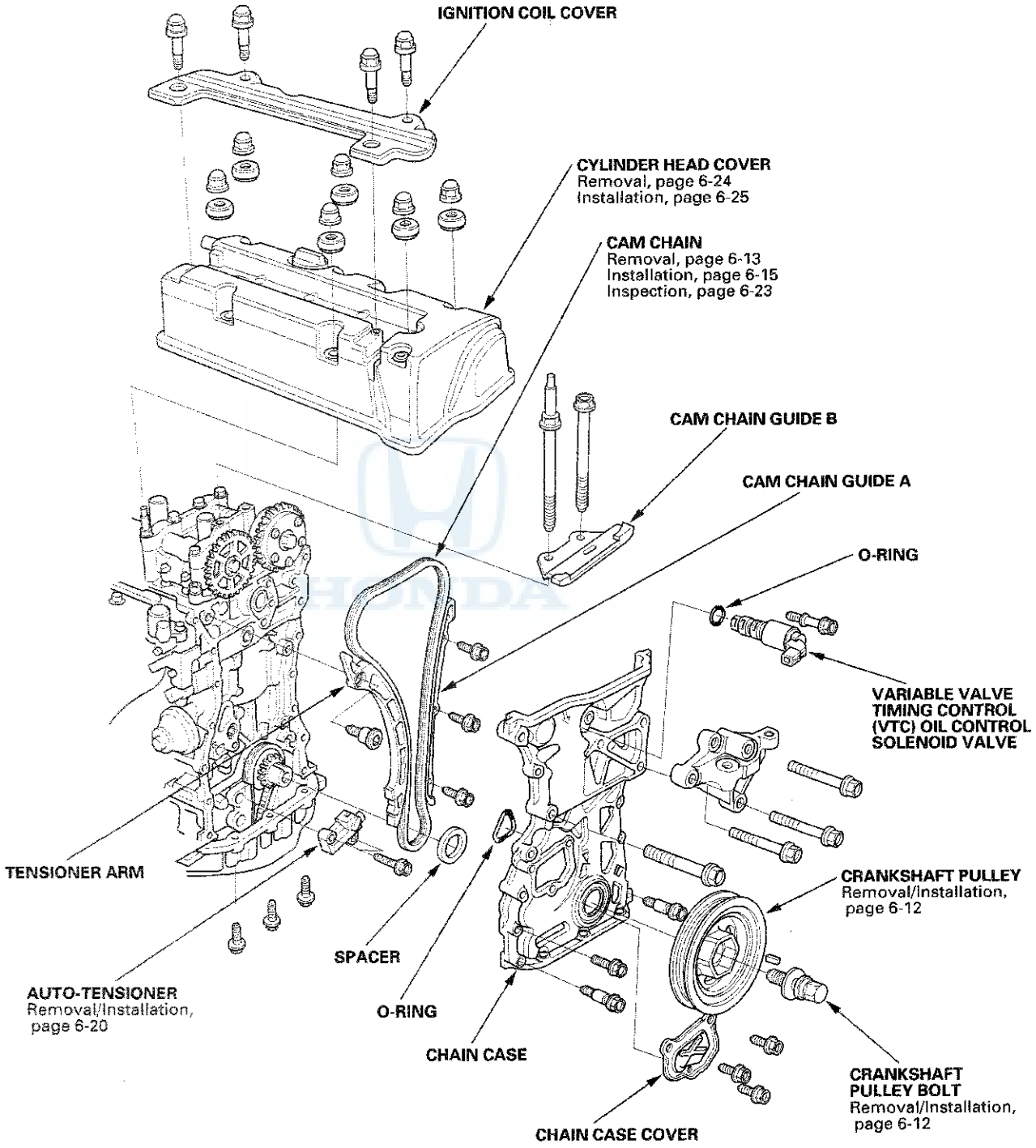

(cont'd)

Component Location Index (cont'd)

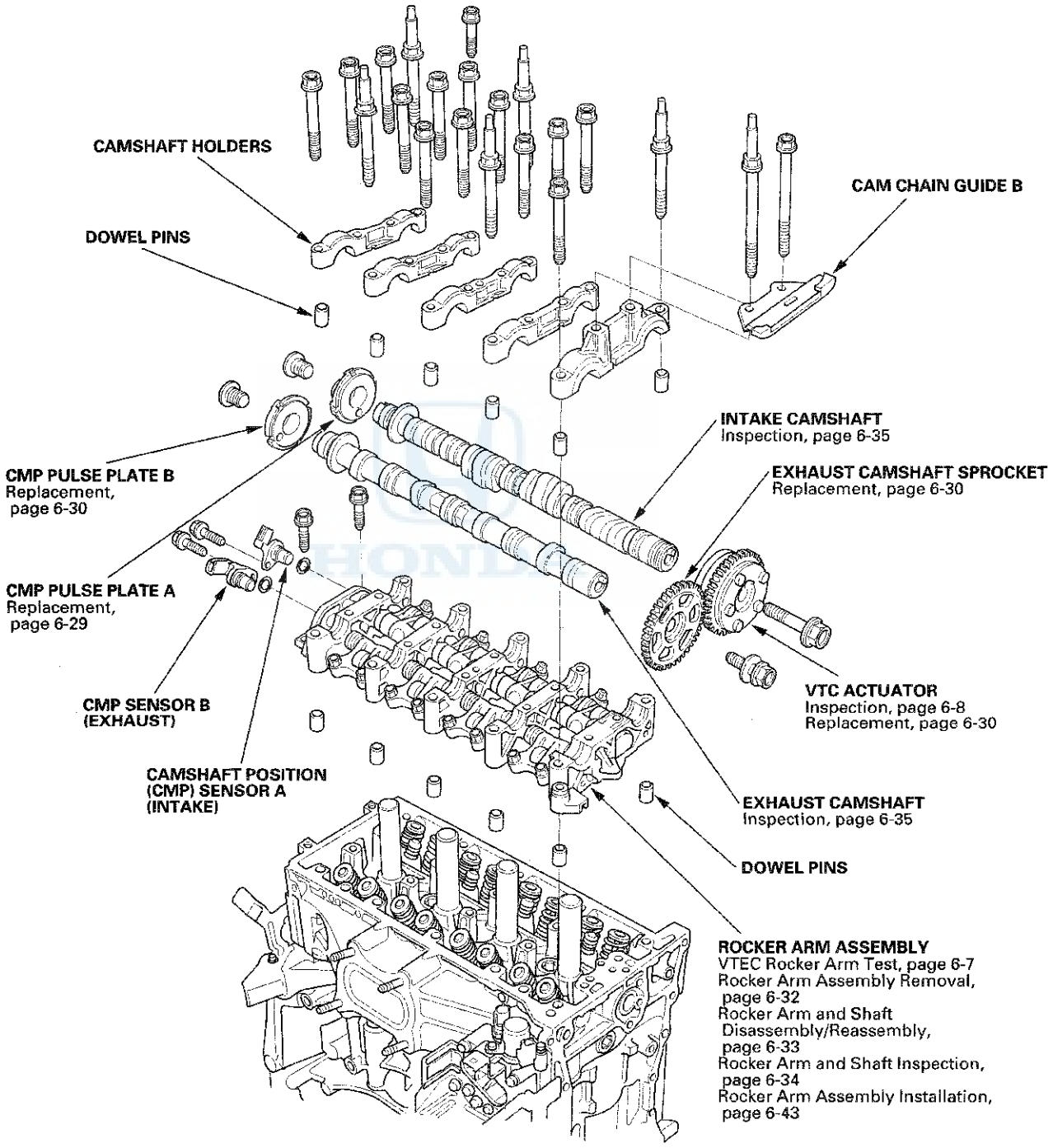

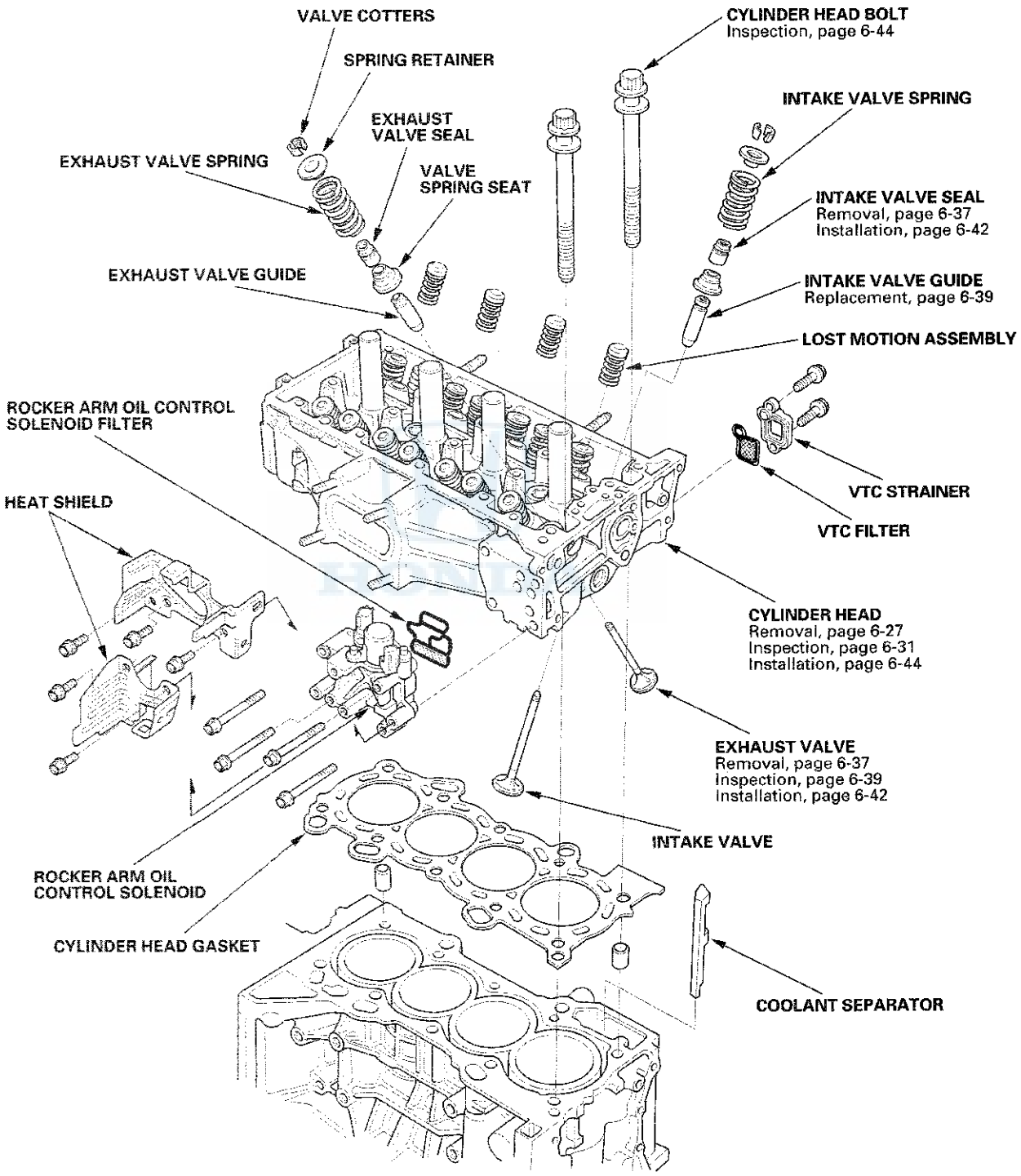
VALVE COTTERS
SPRING RETAINER
EXHAUST VALVE SEAL
EXHAUST VALVE SPRING
VALVE SPRING SEAT
EXHAUST VALVE GUIDE
CYLINDER HEAD BOLT
Inspection, page 6-44
INTAKE VALVE SPRING
INTAKE VALVE SEAL
Removal, page 6-37
Installation, page 6-42
INTAKE VALVE GUIDE
Replacement, page 6-39
LOST MOTION ASSEMBLY
ROCKER ARM OIL CONTROL SOLENOID FILTER
HEAT SHIELD
VTC STRAINER
VTC FILTER
CYLINDER HEAD
Removal, page 6-27
Inspection, page 6-31
Installation, page 6-44
EXHAUST VALVE
Removal, page 6-37
Inspection, page 6-39
Installation, page 6-42
INTAKE VALVE
ROCKER ARM OIL CONTROL SOLENOID
CYLINDER HEAD GASKET
COOLANT SEPARATOR

Engine Compression Inspection

NOTE: After this inspection, you must reset the engine control module (ECM)/powertrain control module (PCM), otherwise the ECM/PCM will continue to stop the fuel injectors from operating.

1. Warm up the engine to normal operating temperature (cooling fan comes on).
2. Turn the ignition switch to LOCK (0).
3. Connect the Honda Diagnostic System (HDS) to the data link connector (DLC) (see step 2 on page 11-3).
4. Turn the ignition switch to ON (II).
5. Make sure the HDS communicates with the vehicle and the ECM/PCM. If it does not communicate, troubleshoot the DLC circuit (see page 11-192).
6. Select ALL INJECTORS STOP in the PGM-FI, INSPECTION menu with the HDS.
7. Turn the ignition switch to LOCK (0).
8. Remove the four ignition coils (see page 4-20).
9. Remove the four spark plugs.
10. Attach a compression gauge to the spark plug hole.

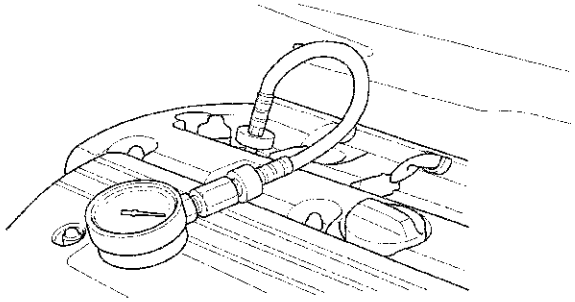

11. Step on the accelerator pedal to open the throttle fully, then crank the engine with the starter motor, and measure the compression.

    Compression Pressure:
    Above 930 kPa (9.5 kgf/cm², 135 psi)

12. Measure the compression on the remaining cylinders.

    Maximum Variation:
    Within 200 kPa (2.0 kgf/cm², 28 psi)

13. If the compression is not within specifications, check the following items, then remeasure the compression.

    - Incorrect valve clearance
    - Confirmation of cam timing
    - Damaged of worn cam lobes
    - Damaged or worn valves and seats
    - Damaged cylinder head gasket
    - Damaged or worn piston rings
    - Damaged or worn piston and cylinder bore

14. Remove the compression gauge from the spark plug hole.
15. Install the four spark plugs.
16. Install the four ignition coils (see page 4-20).
17. Select ECM/PCM reset (see page 11-4) in the PGM-FI, INSPECTION menu to cancel ALL INJECTORS STOP with the HDS.

VTEC Rocker Arm Test

Special Tools Required
- VTEC air stopper 07ZAJ-PNAA200
- VTEC air adapter 07ZAJ-PNAA101
- Air joint adapter 07ZAJ-PNAA300
- Air pressure regulator 07AAJ-PNAA101

1. Start the engine, and let it run for 5 minutes, then turn the ignition switch to LOCK (0).

2. Remove the cylinder head cover (see page 6-24).

3. Set the No. 1 piston at top dead center (TDC) (see step 5 on page 6-13).

4. Move the secondary rocker arm (A) for the No. 1 cylinder. The secondary rocker arm should move independently of the mid rocker arm (B).

   - If the secondary rocker arm moves freely, go to step 5.
   - If the secondary rocker arm does not move independently, remove the mid, primary, and secondary rocker arms as an assembly, and check that the pistons in the rocker arms move smoothly. If any rocker arm needs replacing, replace the mid, primary, and secondary rocker arms as an assembly, then retest.

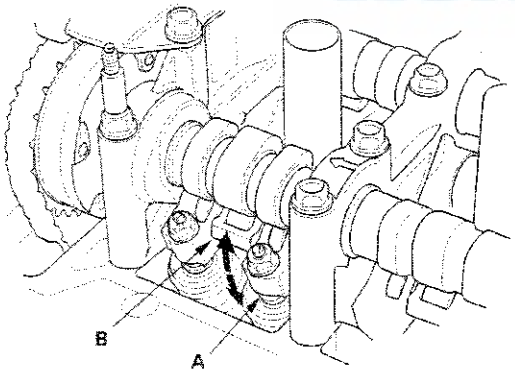

5. Repeat step 4 on the remaining secondary rocker arms with each piston at TDC. When all the secondary rocker arms pass the test, go to step 6.

6. Check that the air pressure on the shop air compressor gauge indicates over 400 kPa (4.0 kgf/cm², 57 psi).

7. Inspect the valve clearance (see page 6-9).

8. Remove the sealing bolt (A) from the relief hole, and install the VTEC air stopper (B).

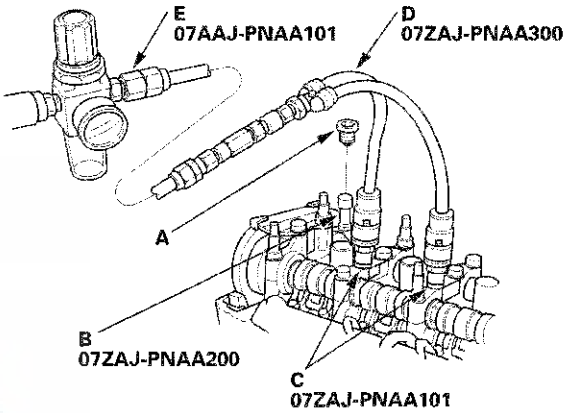

9. Remove the No. 2 and No. 3 camshaft holder bolts, and install the VTEC air adapters (C) finger-tight.

10. Connect the air joint adapter (D) and the air pressure regulator (E).

11. Loosen the valve on the air pressure regulator, and apply the specified air pressure.

    Specified Air Pressure:
    290 kPa (3.0 kgf/cm², 42 psi)

    NOTE: If the rocker arm piston does not move after applying air pressure; move the rocker arm up and down manually by rotating the crankshaft clockwise.

(cont'd)

VTEC Rocker Arm Test (cont'd)

12. With the specified air pressure applied, move the secondary rocker arm (A) for the No. 1 cylinder. The mid rocker arm (B), the primary rocker arm (C), and the secondary rocker arm should move together.

    - If the mid, primary, and secondary rocker arms move together, go to step 13.
    - If the mid and primary rocker arms do not move together with the secondary rocker arm, remove the mid, primary, and the secondary rocker arms as an assembly, and check that the pistons in the rocker arms move smoothly. If any rocker arm needs replacing, replace the mid, the primary, and the secondary rocker arms as an assembly, then retest.

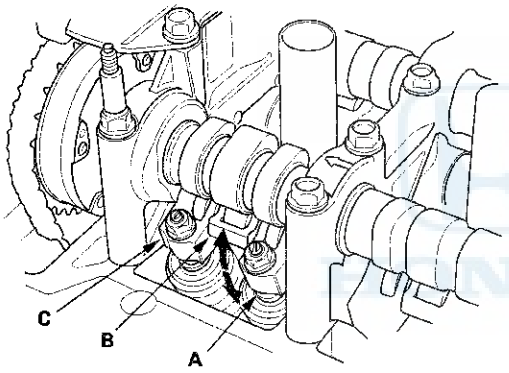

13. Repeat step 12 on the remaining secondary rocker arms with each piston at TDC. When all the secondary rocker arms pass the test, go to step 14.

14. Remove the air pressure regulator, the air joint adapter, the VTEC air adapters, and the VTEC air stopper.

15. Tighten the camshaft holder mounting bolts to 22 N·m (2.2 kgf·m, 16 lbf·ft).

16. Tighten the sealing bolt to 10 N·m (1.0 kgf·m, 7.2 lbf·ft).

17. Install the cylinder head cover (see page 6-25).

VTC Actuator Inspection

1. Remove the cam chain (see page 6-13).

2. Loosen the rocker arm adjusting screws (see step 2 on page 6-32).

3. Remove the camshaft holder (see step 3 on page 6-32).

4. Remove the intake camshaft.

5. Check that the variable valve timing control (VTC) actuator is locked by turning the VTC actuator counterclockwise. If it is not locked, turn the VTC actuator clockwise until it stops, then recheck it. If it is still not locked, replace the VTC actuator.

6. Seal the retard holes (A) in the No. 1 camshaft journal with tape and a wire tie.

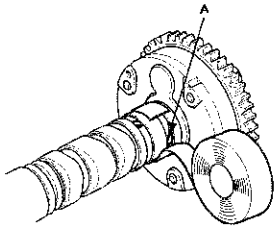

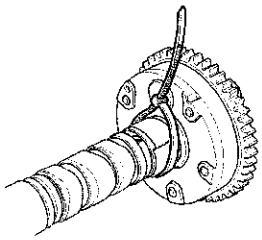

7. Seal one of the advance holes (A) with tape.

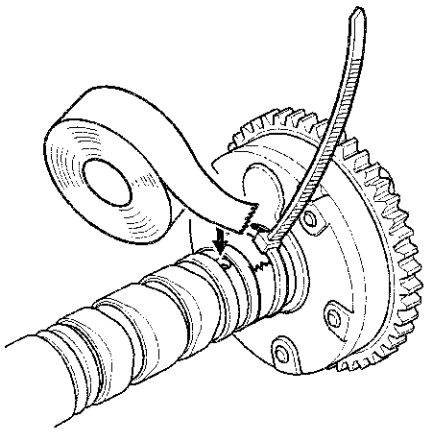

8. Apply air to the unsealed advance hole to release the lock.

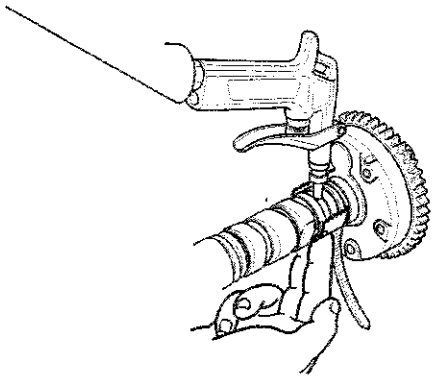

9. Check that the VTC actuator moves smoothly. If the VTC actuator does not move smoothly, replace the VTC actuator.

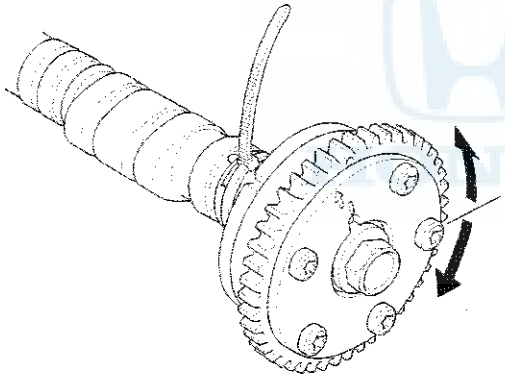

10. Remove the wire tie, the tape, and the adhesive residue from the camshaft journal.

11. Make sure the punch marks on the VTC actuator and the exhaust camshaft sprocket are facing up, then set the camshafts in the head (see step 6 on page 6-44).

12. Set the camshaft holders and cam chain guide B in place (see step 7 on page 6-44).

13. Tighten the camshaft holder bolts to the specified torque (see step 8 on page 6-44).

14. Hold the camshaft, and turn the VTC actuator clockwise until you hear it click. Make sure to lock the VTC actuator by turning it.

15. Install the cam chain (see page 6-15).

16. Adjust the valve clearance (see page 6-9).

Valve Clearance Adjustment

Special Tools Required
- Locknut wrench 07MAA-PR70120
- Adjuster 07MAA-PR70110

NOTE: Connect the Honda Diagnostic System (HDS) to the data link connector (DLC) and monitor the engine coolant temperature (ECT) sensor 1 with the HDS. Adjust the valve clearance only when the ECT sensor 1 temperature is less than 100 °F (38 °C).

1. Remove the cylinder head cover (see page 6-24).

2. Set the No. 1 piston at top dead center (TDC). The punch mark (A) on the variable valve timing control (VTC) actuator and the punch mark (B) on the exhaust camshaft sprocket should be at the top. Align the TDC marks (C) on the VTC actuator and the exhaust camshaft sprocket.

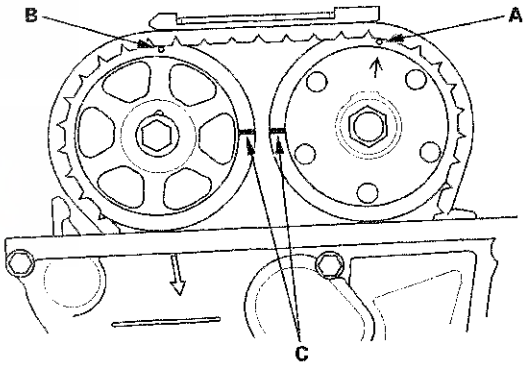

(cont'd)

Valve Clearance Adjustment (cont'd)

3. Select the correct feeler gauge for the valve clearance you are going to check.

Valve Clearance
Intake: 0.21—0.25 mm (0.008—0.010 in.)
Exhaust: 0.25—0.29 mm (0.010—0.011 in.)

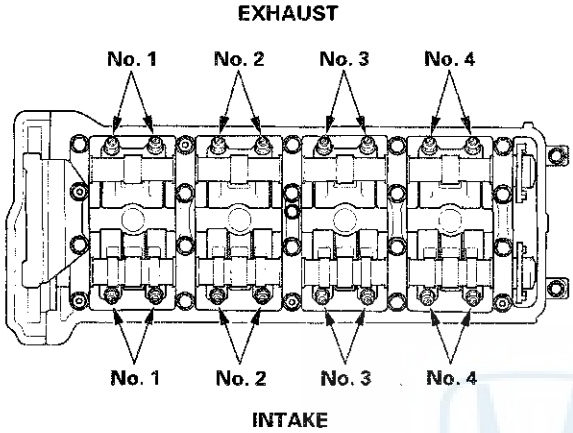

4. Insert the feeler gauge (A) between the adjusting screw (B) and the end of the valve stem, and slide it back and forth; you should feel a slight amount of drag.

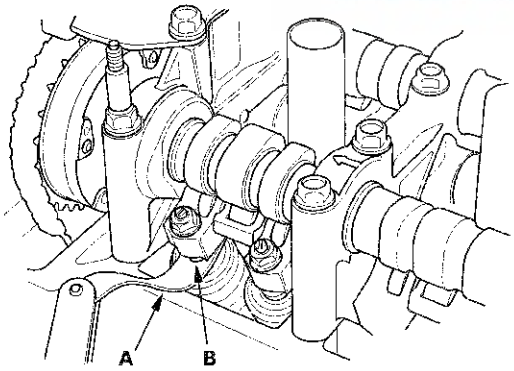

5. If you feel too much or too little drag, loosen the locknut with the locknut wrench and adjuster, and turn the adjusting screw until the drag on the feeler gauge is correct.

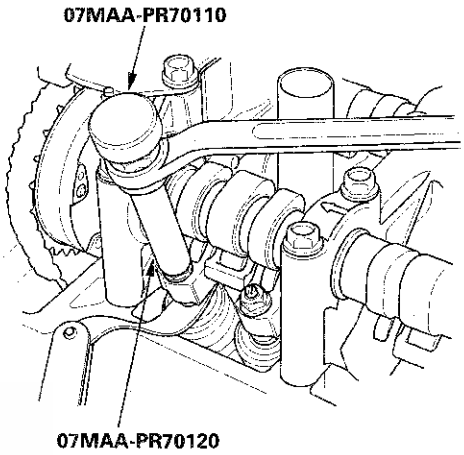

6. Tighten the locknut to the specified torque, and recheck the clearance. Repeat the adjustment if necessary.

Specified Torque
Intake:
7 x 0.75 mm
14 N·m (1.4 kgf·m, 10 lbf·ft)
Apply new engine oil to the nut threads.
Exhaust:
7 x 0.75 mm
14 N·m (1.4 kgf·m, 10 lbf·ft)
Apply new engine oil to the nut threads.

7. Rotate the crankshaft 180 ° clockwise (camshaft pulley turns 90 °).

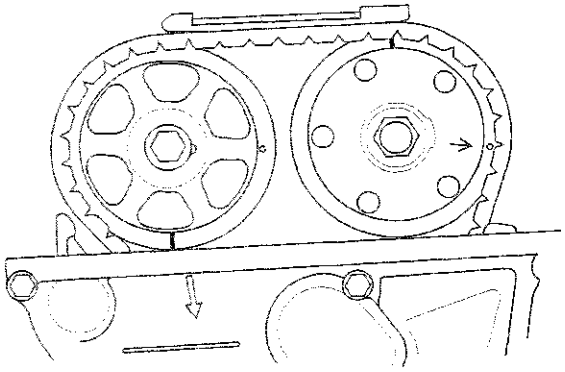

8. Check and, if necessary, adjust the valve clearance on the No. 3 cylinder.

9. Rotate the crankshaft 180 ° clockwise (camshaft pulley turns 90 °).

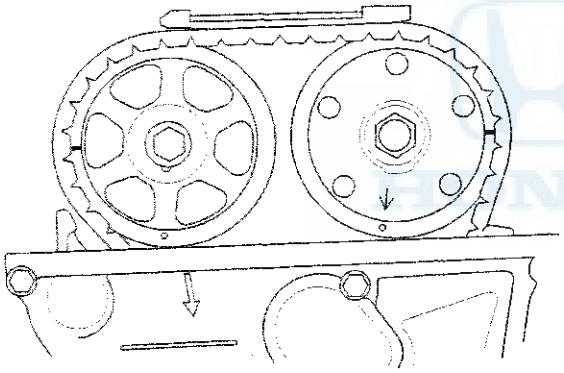

10. Check and, if necessary, adjust the valve clearance on the No. 4 cylinder.

11. Rotate the crankshaft 180 ° clockwise (camshaft pulley turns 90 °).

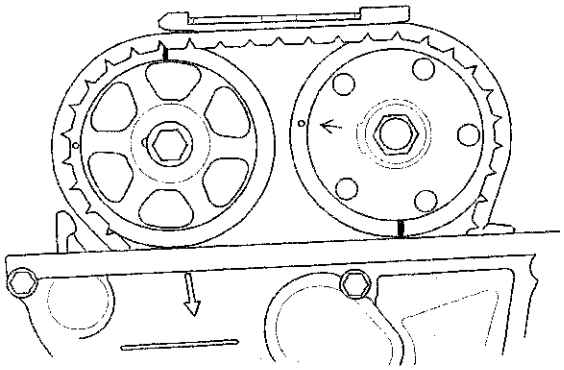

12. Check and, if necessary, adjust the valve clearance on the No. 2 cylinder.

13. Install the cylinder head cover (see page 6-25).

Crankshaft Pulley Removal and Installation

Special Tools Required
- Holder handle 07JAB-001020B
- Crankshaft pulley holder 07AAB-RJAA100
- Socket, 19 mm 07JAA-001020A or a commercially available 19 mm socket

Removal

1. Remove the front wheels.
2. Remove the splash shield (see step 25 on page 5-5).
3. Remove the drive belt (see page 4-30).
4. Hold the pulley with the holder handle (A) and the crankshaft pulley holder (B).

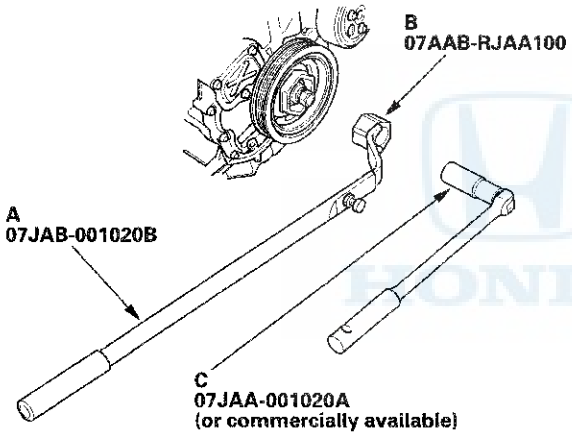

5. Remove the bolt with a socket, 19 mm (C) and a breaker bar, then remove the crankshaft pulley.

Installation

1. Clean the crankshaft pulley (A), the crankshaft (B), the bolt (C), and the washer (D). Lubricate with new engine oil as shown.

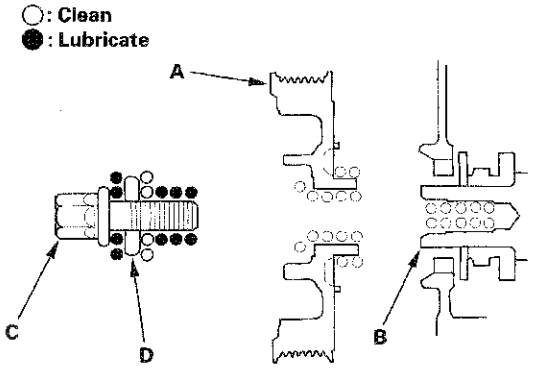

2. Install the crankshaft pulley, and hold the pulley with the holder handle (A) and the crankshaft pulley holder (B).

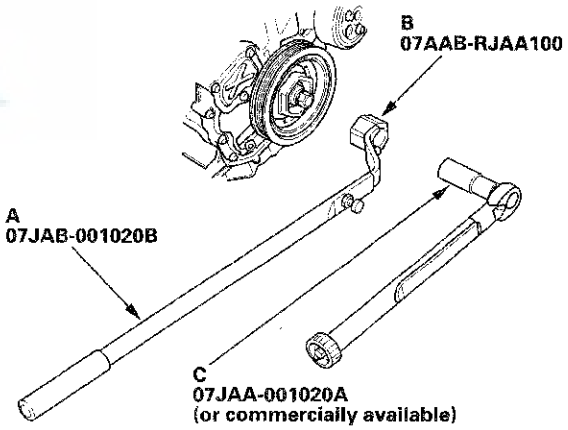

3. Tighten the bolt to 49 N·m (5.0 kgf·m, 36 lbf·ft) with a torque wrench and socket, 19 mm (C). Do not use an impact wrench. If the pulley bolt or crankshaft are new, tighten the bolt to 177 N·m (18.0 kgf·m, 130 lbf·ft), then remove the bolt and tighten it to 49 N·m (5.0 kgf·m, 36 lbf·ft).
4. Tighten the pulley bolt an additional 90 °.
5. Install the drive belt (see page 4-30).
6. Install the splash shield (see step 48 on page 5-20).
7. Install the front wheels.

Cam Chain Removal

NOTE: Keep the cam chain away from magnetic fields.

1. Remove the front wheels.
2. Remove the splash shield (see step 25 on page 5-5).
3. Remove the drive belt (see page 4-30).
4. Remove the cylinder head cover (see page 6-24).
5. Set the No. 1 piston at top dead center (TDC). The punch mark (A) on the variable valve timing control (VTC) actuator and the punch mark (B) on the exhaust camshaft sprocket should be at the top. Align the TDC marks (C) on the VTC actuator and the exhaust camshaft sprocket.

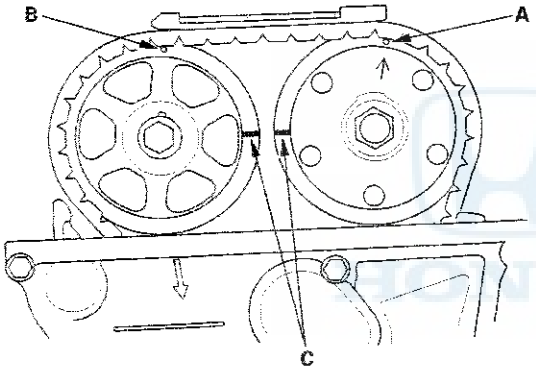

6. Disconnect the VTC oil control solenoid valve connector (A) and remove the harness clamp (B).

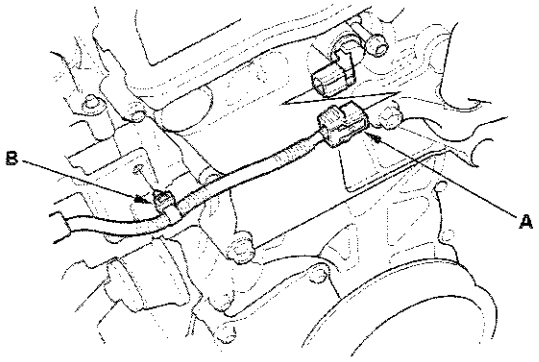

7. Remove the VTC oil control solenoid valve (see page 11-300).
8. Remove the crankshaft pulley (see page 6-12).
9. Support the engine with a jack and a wood block under the oil pan.
10. Remove the ground cable (A), then remove the side engine mount bracket (B).

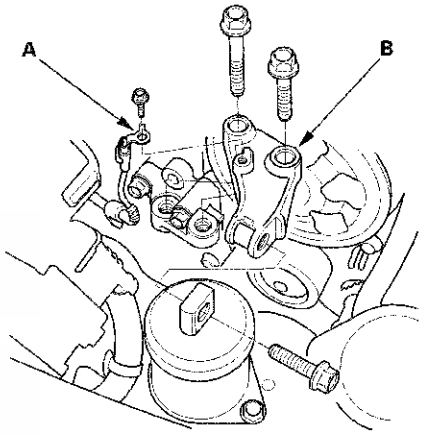

11. Remove the side engine mount bracket mounting bolts.

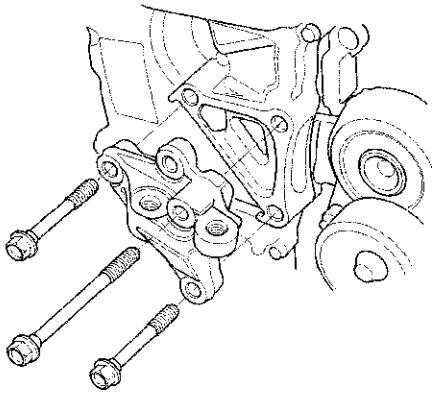

(cont'd)

Cam Chain Removal (cont'd)

12. Remove the cam chain case (A) and the spacer (B).

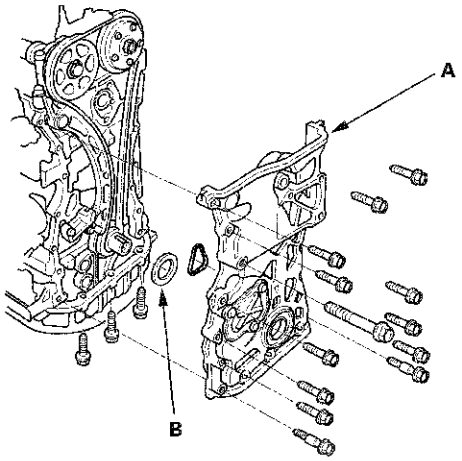

13. Loosely install the crankshaft pulley.

14. Turn the crankshaft counterclockwise to compress the auto-tensioner.

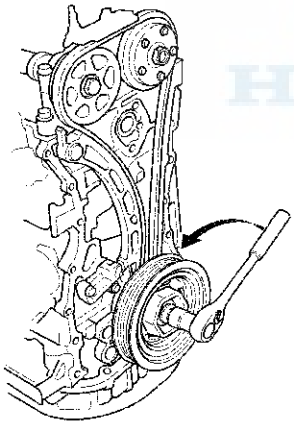

15. Align the holes on the lock (A) and the auto-tensioner (B), then insert a 1.2 mm (0.05 in.) diameter pin or lock pin (P/N 14511-PNA-003) (C) into the holes. Turn the crankshaft clockwise to secure the pin.

    NOTE: Check the auto-tensioner cam position. If the position are not aligned, set the first cam to the first edge of the rack.

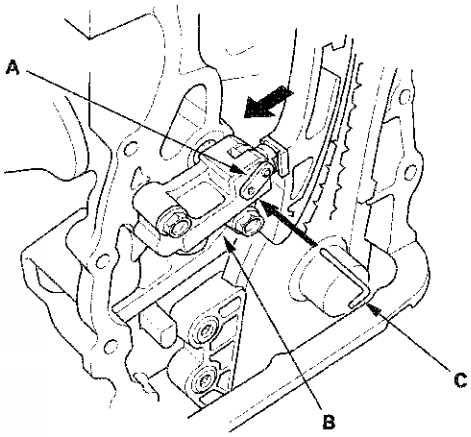

16. Remove the auto-tensioner.

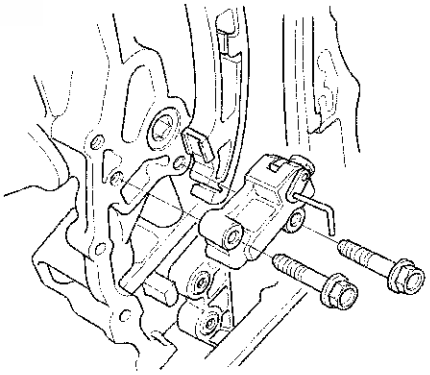

17. Remove cam chain guide B.

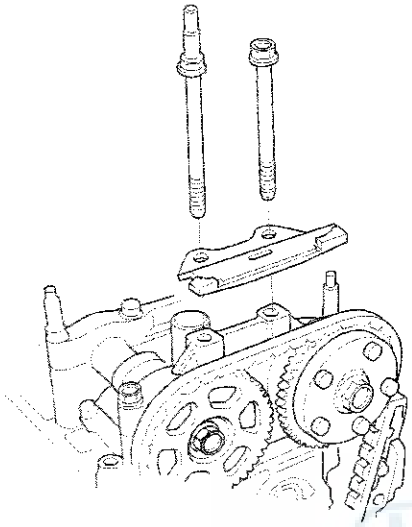

18. Remove cam chain guide A and the tensioner arm (B).

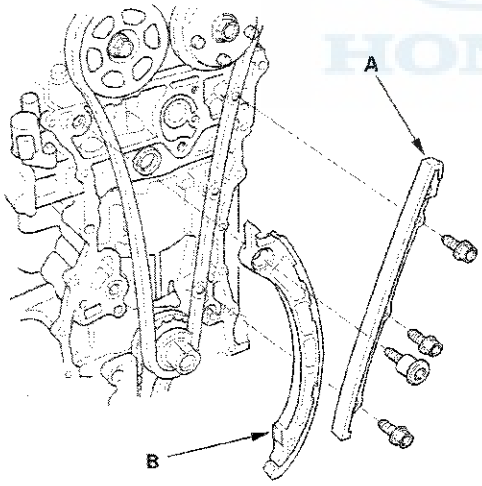

19. Remove the cam chain.

Cam Chain Installation

Special Tools Required
Camshaft lock pin set 07AAB-RWCA120

NOTE:
- Keep the cam chain away from magnetic fields.
- Before doing this procedure, check that the variable valve timing control (VTC) actuator is locked by turning the VTC actuator counterclockwise. If not locked, turn the VTC actuator clockwise until it stops, then recheck it. If it is still not locked, replace the VTC actuator.

1. Set the crankshaft to top dead center (TDC). Align the TDC mark (A) on the crankshaft sprocket with the pointer (B) on the engine block.

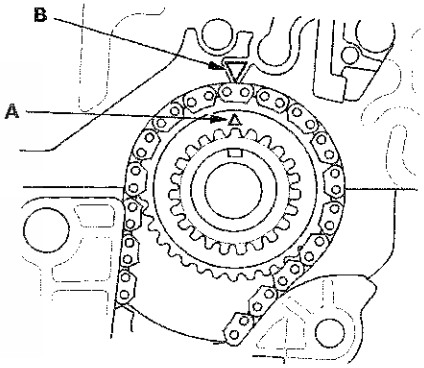

2. Set the camshafts to TDC. The punch mark (A) on the VTC actuator and the punch mark (B) on the exhaust camshaft sprocket should be at the top. Align the TDC marks (C) on the VTC actuator and the exhaust camshaft sprocket.

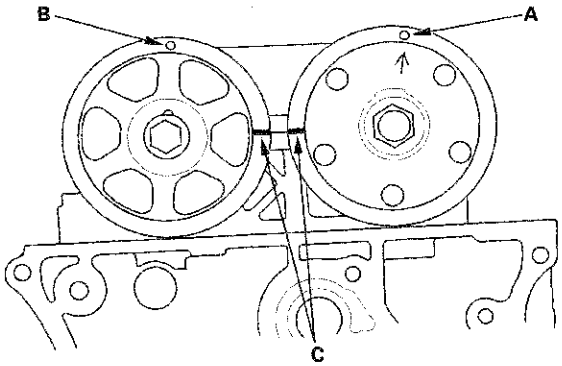

(cont'd)

Cam Chain Installation (cont'd)

3. To hold the intake camshaft, insert a camshaft lock pin (07AAB-RWCA120) (A) into the maintenance hole in camshaft position (CMP) pulse plate A (B) and through the No. 5 rocker shaft holder (C).

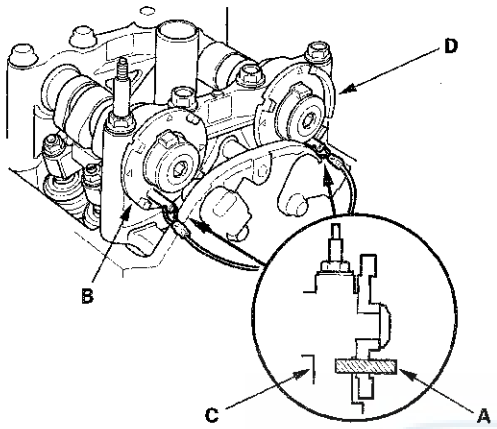

4. To hold the exhaust camshaft, insert a camshaft lock pin (A) into the maintenance hole in CMP pulse plate B (D) and through the No. 5 rocker shaft holder (C).

5. Install the cam chain on the crankshaft sprocket with the colored link plate (A) aligned with the mark (B) on the crankshaft sprocket.

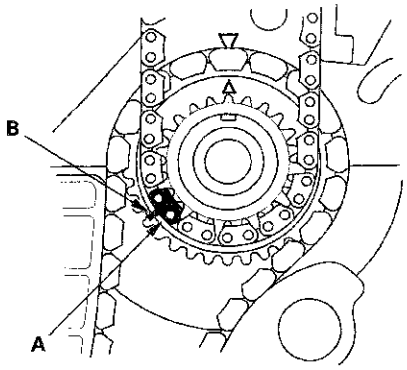

6. Install the cam chain on the VTC actuator and the exhaust camshaft sprocket with the punch marks (A) aligned with the center of the two colored link plates (B).

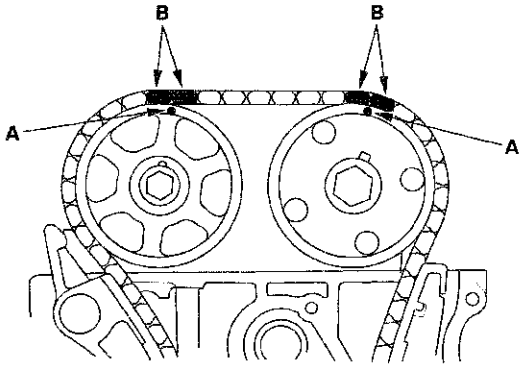

7. Install cam chain guide A and the tensioner arm (B).

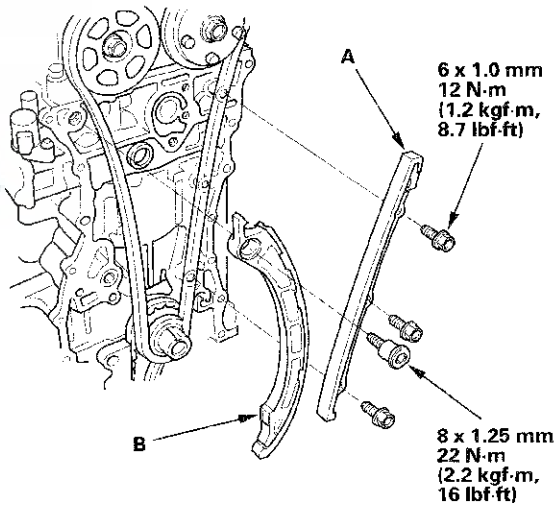

8. Compress the auto-tensioner when replacing the cam chain. Remove the pin from the auto-tensioner. Turn the plate (A) counterclockwise, to release the lock, then press the rod (B), and set the first cam (C) to the first edge of the rack (D). Insert the 1.2 mm (0.05 in.) diameter pin or lock pin (P/N 14511-PNA-003) (E) into the holes (F).

   NOTE: If the chain tensioner is not set up as described, the tensioner will become damaged.

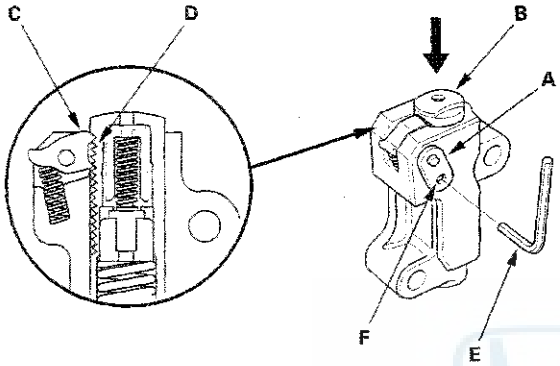

9. Install cam chain guide B.

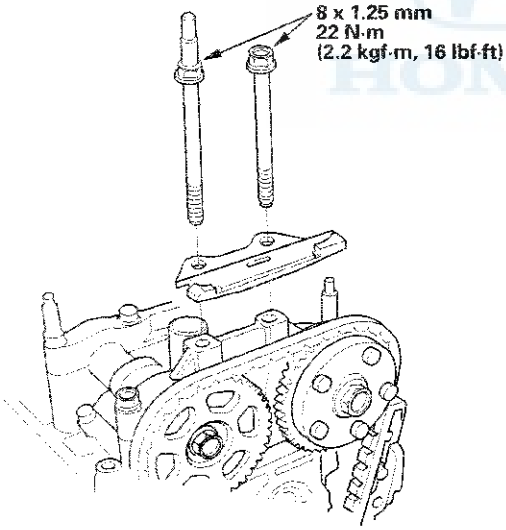

10. Install the auto-tensioner.

    NOTE: Check the auto-tensioner cam position. If the position is not aligned, set the first cam to the first edge of the rack.

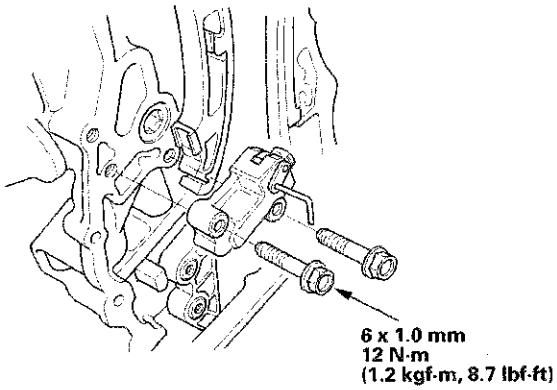

11. Remove the pin or lock pin from the auto-tensioner.

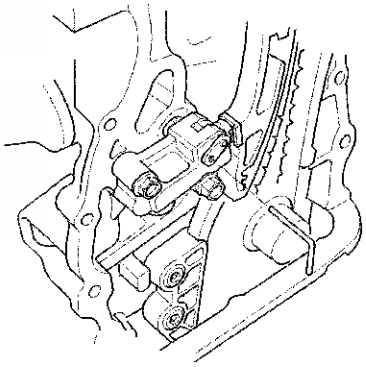

(cont'd)

Cam Chain Installation (cont'd)

12. Remove the camshaft lock pin set.

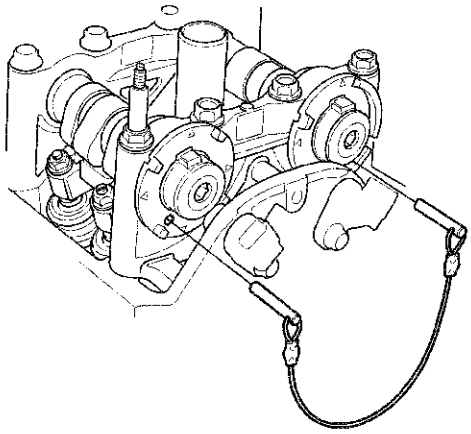

13. Check the chain case oil seal for damage. If the oil seal is damaged, replace the chain case oil seal (see page 6-22).

14. Remove the old liquid gasket from the chain case mating surfaces, the bolts, and the bolt holes.

15. Clean and dry the chain case mating surfaces.

16. Apply liquid gasket, P/N 08717-0004, 08718-0001, 08718-0003, or 08718-0009, evenly to the engine block mating surface of the chain case, and to the inside edge of the threaded bolt holes. Install the component within 5 minutes of applying the liquid gasket.

    NOTE:
    - If you apply liquid gasket P/N 08718-0012, the component must be installed within 4 minutes.
    - If too much time has passed after applying the liquid gasket, remove the old liquid gasket and residue, then reapply new liquid gasket.

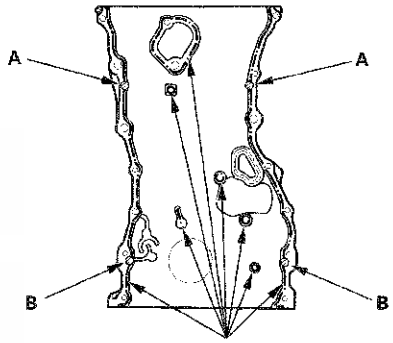

Apply liquid gasket along the broken line.

17. Apply liquid gasket to the engine block upper surface contact areas (A) on the chain case and lower block upper surface contact areas (B) on the chain case.

18. Apply liquid gasket, P/N 08717-0004, 08718-0001, 08718-0003, or 08718-0009, evenly to the oil pan mating surface of the chain case, and to the inside edge of the threaded bolt holes. Install the component within 5 minutes of applying the liquid gasket.

    NOTE:
    - If you apply liquid gasket P/N 08718-0012, the component must be installed within 4 minutes.
    - If too much time has passed after applying the liquid gasket, remove the old liquid gasket and residue, then reapply new liquid gasket.

Apply liquid gasket along the broken line.

19. Install the spacer (A), then install the new O-ring (B) on the chain case. Set the edge of the chain case (C) to the edge of the oil pan (D), then install the chain case on the engine block (E). Wipe off the excess liquid gasket on the oil pan and chain case mating surface.

NOTE:
- When installing the chain case, do not slide the bottom surface onto the oil pan mounting surface.
- Wait at least 30 minutes before filling the engine with oil.
- Do not run the engine for at least 3 hours after installing the chain case.

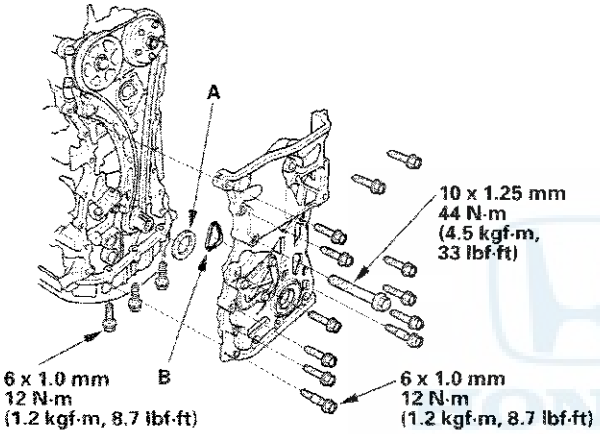

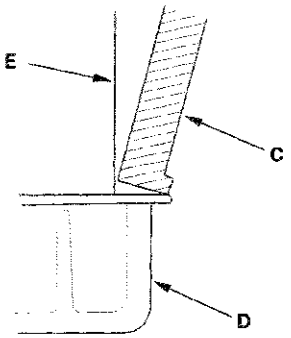

20. Install the side engine mount bracket, then tighten the side engine mount bracket mounting bolts.

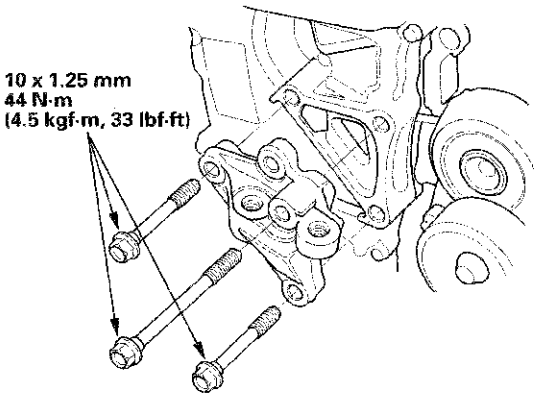

21. Tighten the new side engine mount bracket mounting bolts in the numbered sequence shown.

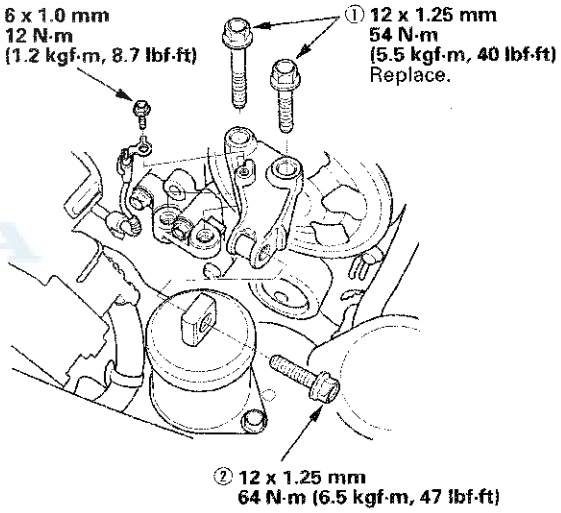

22. Install the ground cable.

23. Remove the jack and the wood block.

(cont'd)

Cam Chain Installation (cont'd)

24. Install the crankshaft pulley (see page 6-12).

25. Install the VTC oil control solenoid valve (see page 11-300).

26. Connect the VTC oil control solenoid valve connector (A) and install the harness clamp (B).

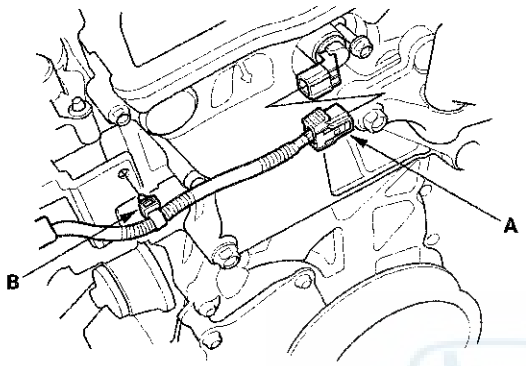

27. Install the cylinder head cover (see page 6-25).

28. Install the drive belt (see page 4-30).

29. Install the splash shield (see step 48 on page 5-20).

30. Install the front wheels.

31. Do the crankshaft position (CKP) pattern clear/CKP pattern learn procedure (see page 11-5).

Auto-tensioner Removal and Installation

Removal

1. Remove the chain case cover.

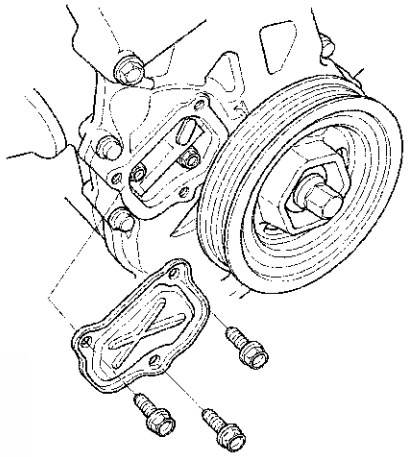

2. Turn the crankshaft counterclockwise to compress the auto-tensioner.

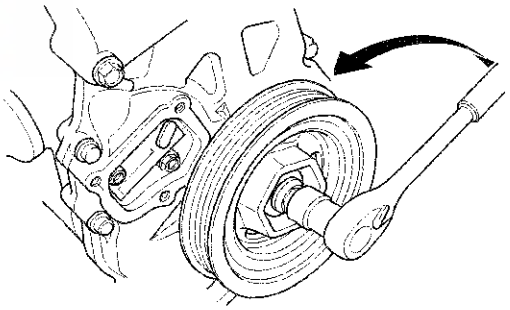

3. Align the holes on the lock (A) and the auto-tensioner (B), then insert a 1.2 mm (0.05 in.) diameter pin or lock pin (P/N 14511-PNA-003) (C) into the holes. Turn the crankshaft clockwise to secure the pin.

   NOTE: Check the auto-tensioner cam position. If the position is not aligned, set the first cam to the first edge of the rack (see step 8 on page 6-17).

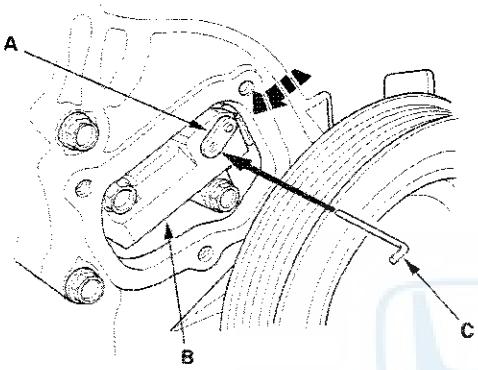

4. Remove the auto-tensioner.

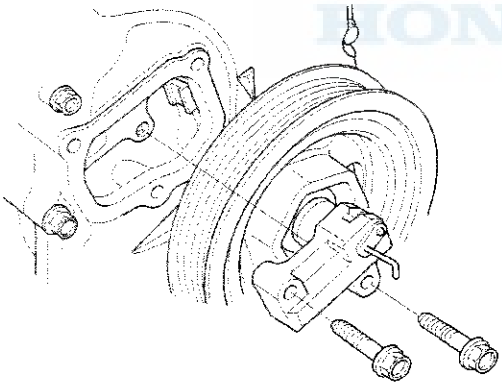

Installation

1. Install the auto-tensioner.

   NOTE: Check the auto-tensioner cam position. If the position is not aligned, set the first cam to the first edge of the rack.

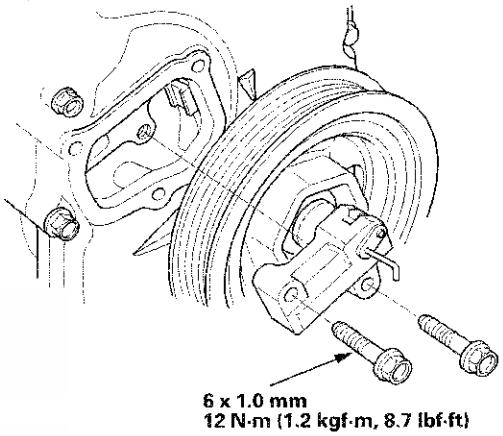

2. Remove the 1.2 mm (0.05 in.) diameter pin or lock pin (P/N 14511-PNA-003) from the auto-tensioner.

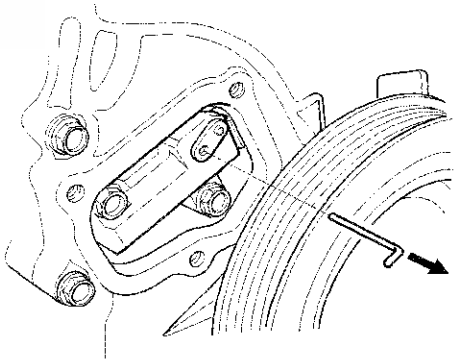

3. Remove all of the old liquid gasket from the chain case cover mating surfaces, the bolts, and the bolt holes.

4. Clean and dry the chain case cover mating surfaces.

(cont'd)

Auto-tensioner Removal and Installation (cont'd)

5. Apply liquid gasket, P/N 08717-0004, 08718-0001, 08718-0003, or 08718-0009, evenly to the chain case mating surface of the chain case cover, and to the inside edge of the threaded bolt holes. Install the component within 5 minutes of applying the liquid gasket.

   NOTE:
   - If you apply liquid gasket P/N 08718-0012, the component must be installed within 4 minutes.
   - If too much time has passed after applying the liquid gasket, remove the old liquid gasket and residue, then reapply new liquid gasket.

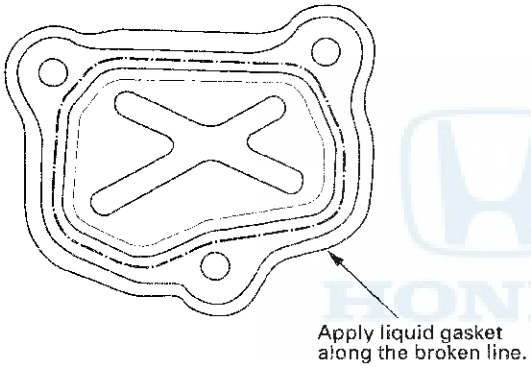

6. Install the chain case cover.

   NOTE:
   - Wait at least 30 minutes before filling the engine with oil.
   - Do not run the engine for at least 3 hours after installing the chain case cover.

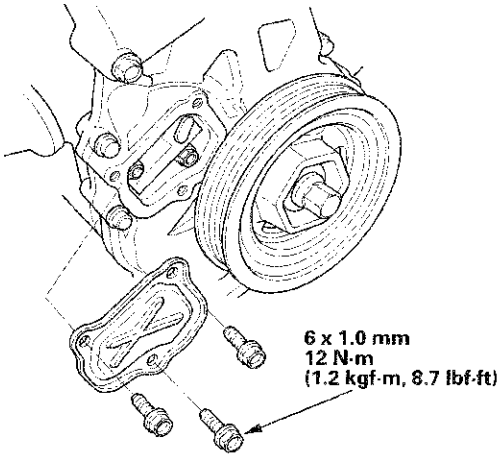

Chain Case Oil Seal Installation

Special Tools Required
- Driver 07749-0010000
- Attachment, 52 x 55 mm 07746-0010400

1. Apply a light coat of new engine oil around the crankshaft.

2. Apply a light coat of new engine oil to the lip of the chain cace oil seal.

3. Use the handle driver and attachment, 52 x 55 mm to drive a new oil seal squarely into the chain case to the specified installed height.

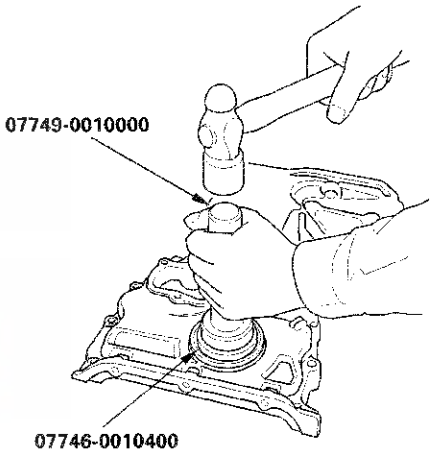

4. Measure the distance between the chain case surface (A) and the oil seal (B).

   Oil Seal Installed Height:
   32.4—33.1 mm (1.28—1.30 in.)

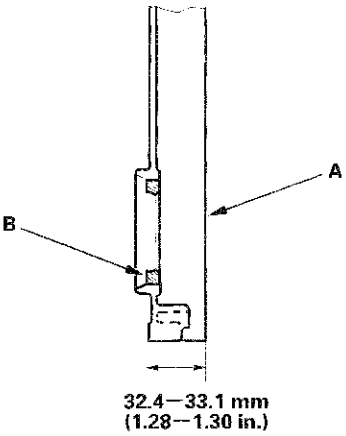

Cam Chain Inspection

Special Tools Required
Cam chain inspection gauge 07AAJ-RWCA100

1. Remove the front wheels.

2. Remove the splash shield (see step 25 on page 5-5).

3. Remove the cylinder head cover (see page 6-24).

4. Rotate the crankshaft pulley two turns clockwise.

5. Set the No. 1 piston at top dead center (TDC). The punch mark (A) on the variable valve timing control (VTC) actuator and the punch mark (B) on the exhaust camshaft sprocket should be at the top. Align the TDC marks (C) on the VTC actuator and the exhaust camshaft sprocket.

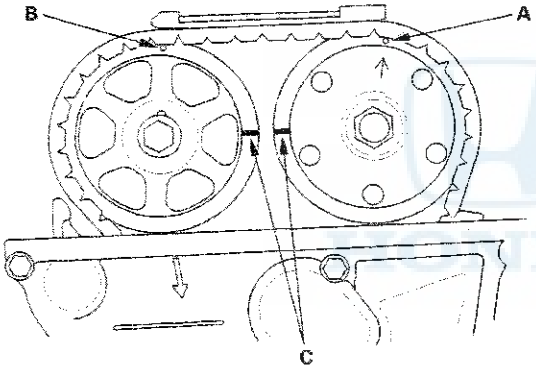

6. Measure the clearance between the cam chain (A) and the tensioner arm (B) with the cam chain inspection gauge (07AAJ-RWCA100).

   - If the clearance is OK, go to step 17.
   - If the clearance is more than the service limit, go to step 7.

   Chain-to-Arm Clearance
   Service Limit:
   MIL on with P0341: 4.3 mm (0.17 in.)
   Without MIL: 5.5 mm (0.22 in.)

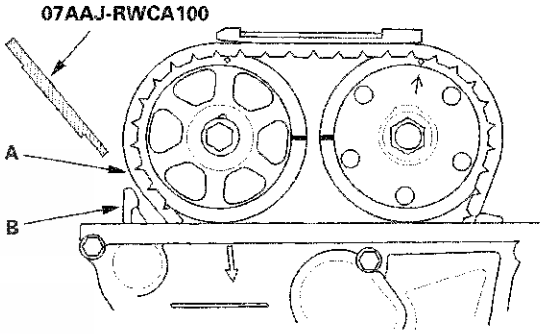

7. Remove the oil pan (see page 7-11).

8. Support the engine with a jack and a wood block under the engine block.

   NOTE: Do not hit the oil pump and the baffle plate when placing the jack on the edge of the engine block.

9. Remove the cam chain (see page 6-13), and check the teeth on the crankshaft sprocket, the VTC actuator, and the exhaust camshaft sprocket for wear and damage. If any of them are worn or damaged, replace if necessary.

10. Check the oil passage on the auto-tensioner for clogs. If the auto-tensioner is clogged, replace it.

(cont'd)

Cam Chain Inspection (cont'd)

11. Measure the length of the oil pump chain auto-tensioner rod.

    Oil Pump Chain Auto-Tensioner Rod Length
    Service Limit: 13 mm (0.51 in.)

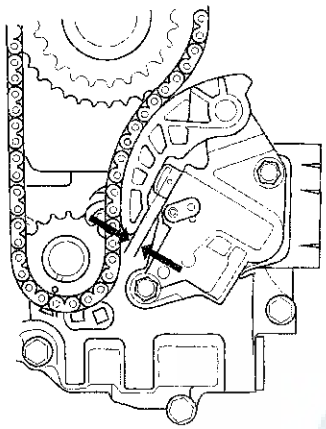

12. If the length is over the service limit, replace the oil pump chain (see page 8-23). When replacing, check the teeth on the crankshaft sprocket and oil pump sprocket for wear and damage. If any of them are worn or damaged, replace if necessary.

13. Check the oil passage on the oil pump chain auto-tensioner for clogs. If the auto-tensioner is clogged, replace it.

14. Install the new cam chain (see page 6-15).

15. Remove the jack and the wood block.

16. Install the oil pan (see page 7-31).

17. Install the cylinder head cover (see page 6-25).

18. Install the splash shield (see step 48 on page 5-20).

19. Install the front wheels.

Cylinder Head Cover Removal

1. Remove the strut brace (if equipped) (see page 20-289).

2. Remove the engine cover.

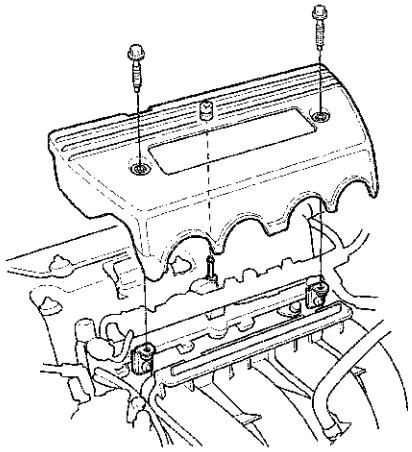

3. Remove the four ignition coils (see page 4-20).

4. Remove the dipstick (A) and the power steering (P/S) hose bracket (B) and disconnect the breather hose (C) and the brake booster vacuum hose (D).

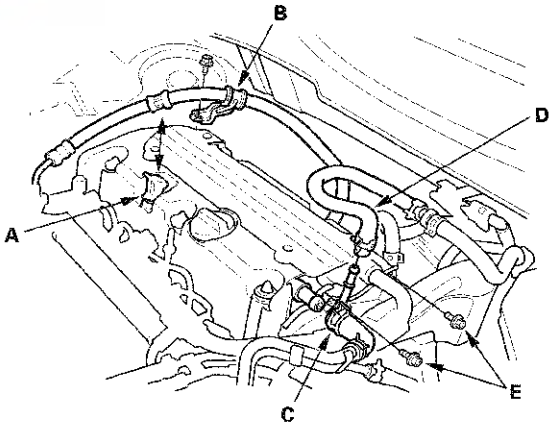

5. Remove the two bolts (E) securing the evaporative emission (EVAP) canister purge valve bracket.

6. Remove the cylinder head cover.

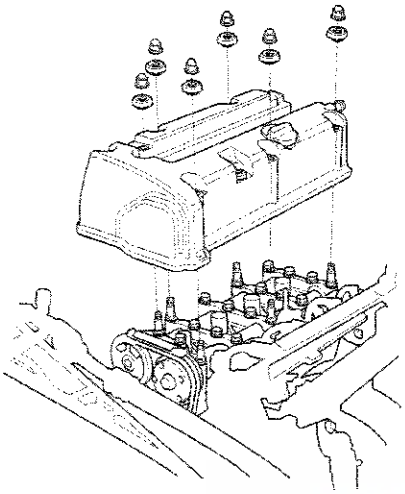

Cylinder Head Cover Installation

1. Thoroughly clean the head cover gasket and the groove.

2. Install the head cover gasket (A) in the groove of the cylinder head cover (B).

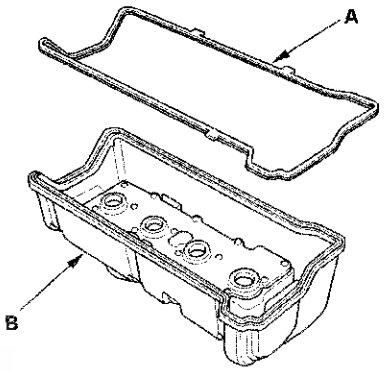

3. Check that the mating surfaces are clean and dry.

4. Apply liquid gasket, P/N 08717-0004, 08718-0001, 08718-0003, or 08718-0009, on the chain case and the No. 5 rocker shaft holder mating areas. Install the component within 5 minutes of applying the liquid gasket.

   NOTE:
   - If you apply liquid gasket P/N 08718-0012, the component must be installed within 4 minutes.
   - If too much time has passed after applying the liquid gasket, remove the old liquid gasket and residue, then reapply new liquid gasket.

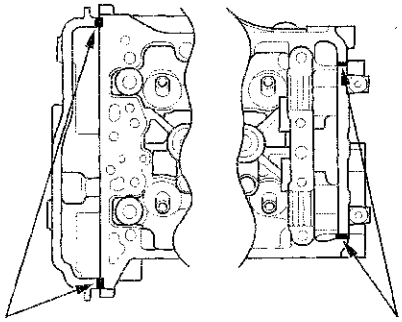

Apply liquid gasket to these points.

Apply liquid gasket to these points.

(cont'd)

Cylinder Head Cover Installation (cont'd)

5. Set the spark plug seals (A) on the spark plug tubes. Place the cylinder head cover (B) on the cylinder head, then slide the cover slightly back and forth to seat the head cover gasket.

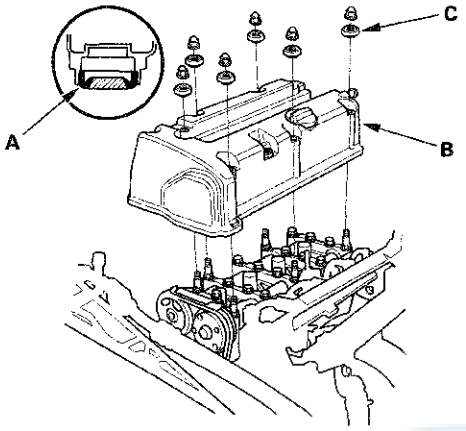

6. Inspect the cover washers (C). Replace any washer that is damaged or deteriorated.

7. Tighten the bolts in three steps. In the final step tighten all bolts, in sequence, to 12 N·m (1.2 kgf·m, 8.7 lbf·ft).

   NOTE:
   - Wait at least 30 minutes before filling the engine with oil.
   - Do not run the engine for at least 3 hours after installing the head cover.

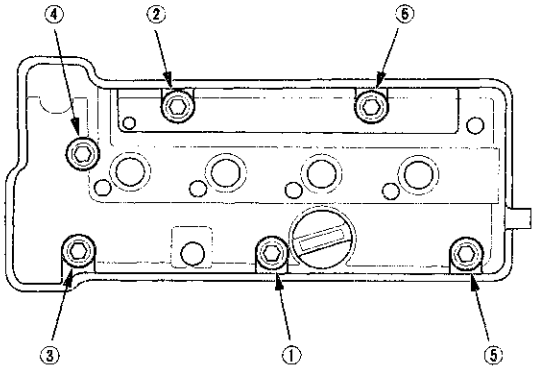

8. Install the two bolts (A) securing the evaporative emission (EVAP) canister purge valve bracket.

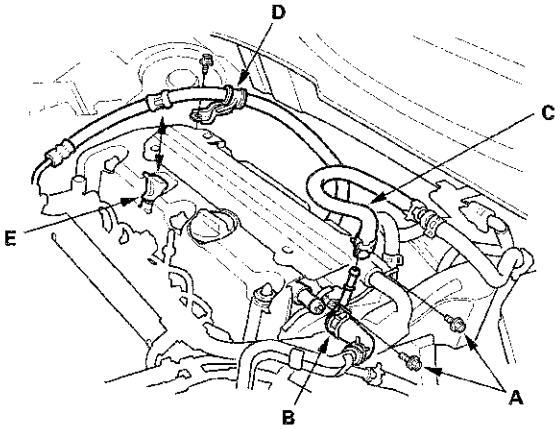

9. Connect the breathe hose (B) and the brake booster vacuum hose (C) and install the power steering (P/S) hose bracket (D), and the dipstick (E).

10. Install the four ignition coils (see page 4-20).

11. Install the engine cover.

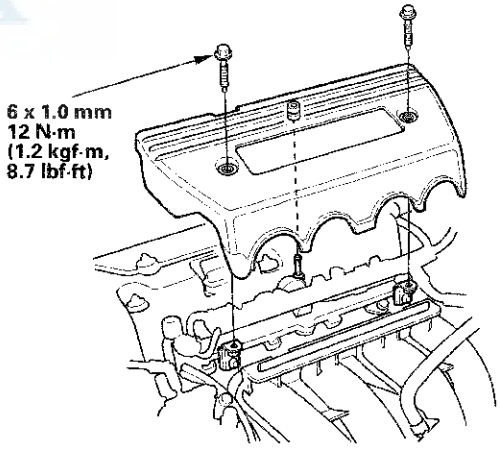

12. Install the strut brace (if equipped) (see page 20-289).

Cylinder Head Removal

NOTE:
- Use fender covers to avoid damaging painted surfaces.
- To avoid damage, unplug the wiring connectors carefully while holding the connector portion.
- Connect the Honda Diagnostic System (HDS) to the data link connector (DLC), and monitor the engine coolant temperature (ECT) sensor 1. To avoid damaging the cylinder head, wait until the ECT sensor 1 temperature drops below 100 °F (38 °C) before loosening the cylinder head bolts.
- Mark all wiring and hoses to avoid misconnection. Also, be sure that they do not contact other wiring or hoses, or interfere with other parts.

1. Remove the strut brace (if equipped) (see page 20-289).
2. Relieve the fuel pressure (see page 11-332).
3. Drain the engine coolant (see page 10-6).
4. Remove the drive belt (see page 4-30).
5. Remove the intake manifold (see page 9-3).
6. Remove the catalytic converter (see page 11-367).
7. Disconnect the evaporative emission (EVAP) canister hose (A).

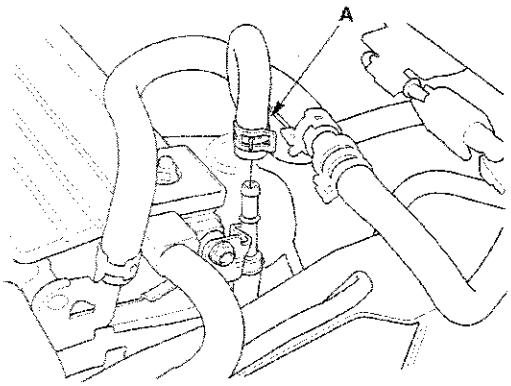

8. Remove the quick-connect fitting cover (A), then disconnect the fuel feed hose (B) (see page 11-340).

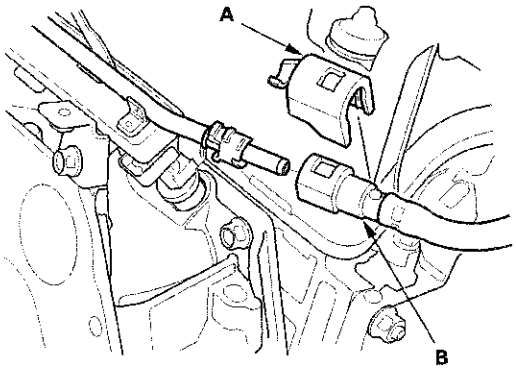

9. Disconnect the four fuel injector connectors (A), the engine mount control solenoid valve connector (B), and remove the ground cables (C).

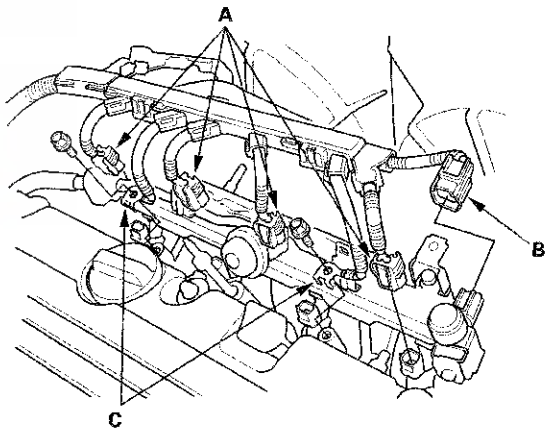

(cont'd)

Cylinder Head Removal (cont'd)

10. Remove the four bolts securing the EVAP canister purge valve bracket.

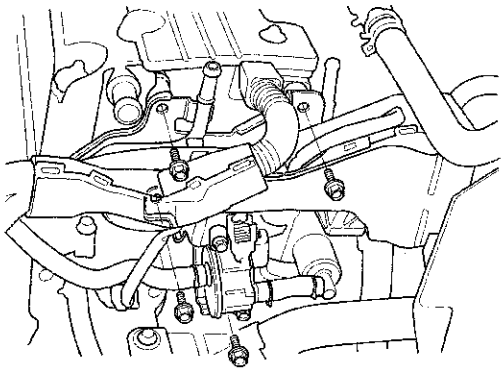

11. Disconnect the upper radiator hose (A), the heater hoses (B), and the water bypass hose (C).

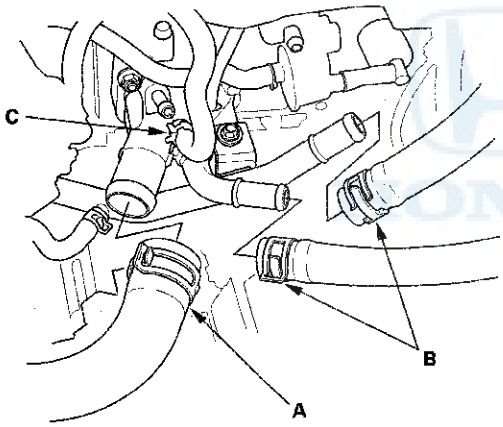

12. Remove the two bolts (A) securing the connecting pipe.

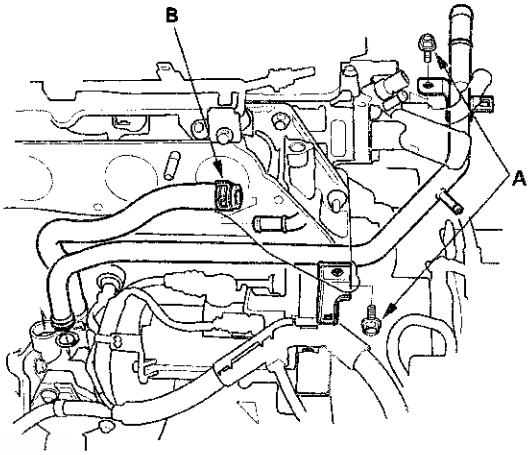

13. Disconnect the water bypass hose (B).

14. Disconnect the following engine wire harness connectors and remove the wire harness clamps from the cylinder head:

- Engine coolant temperature (ECT) sensor 1 connector
- Camshaft position (CMP) sensor A (Intake) connector
- Camshaft position (CMP) sensor B (Exhaust) connector
- Rocker arm oil control valve connector
- Rocker arm oil pressure switch connector
- EVAP canister purge valve connector
- Variable valve timing control (VTC) oil control solenoid valve connector
- Engine oil pressure switch connector

15. Remove the cam chain (see page 6-13).

16. Remove the rocker arm assembly (see page 6-32).

17. Remove the cylinder head bolts. To prevent warpage, loosen the bolts in sequence 1/3 turn at a time; repeat the sequence until all bolts are loosened.

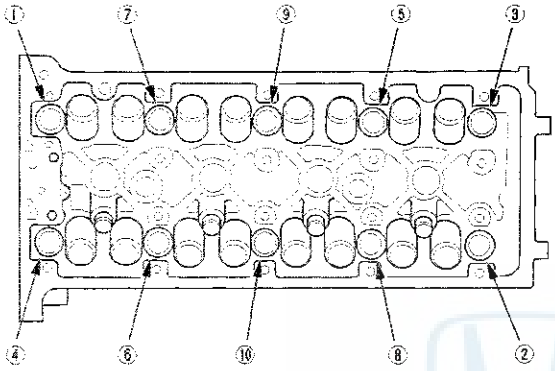

18. Remove the cylinder head.

CMP Pulse Plate A Replacement

1. Remove the cylinder head cover (see page 6-24).

2. Remove camshaft position (CMP) sensor A (see page 11-301).

3. Hold the camshaft with an open-end wrench, then loosen the bolt.

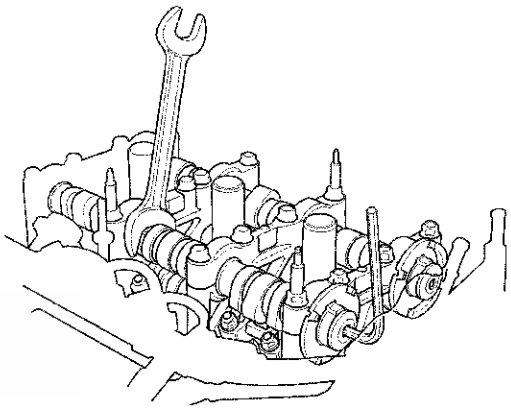

4. Remove CMP pulse plate A.

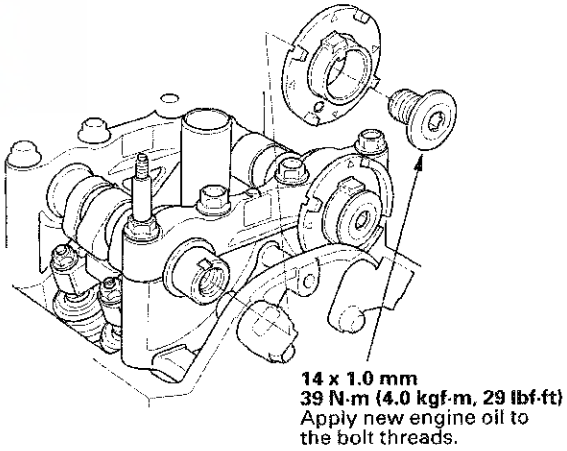

5. Install CMP pulse plate A in the reverse order of removal.

CMP Pulse Plate B Replacement

1. Remove the cylinder head cover (see page 6-24).
2. Remove camshaft position (CMP) sensor B (see page 11-210).
3. Hold the camshaft with an open-end wrench, then loosen the bolt.

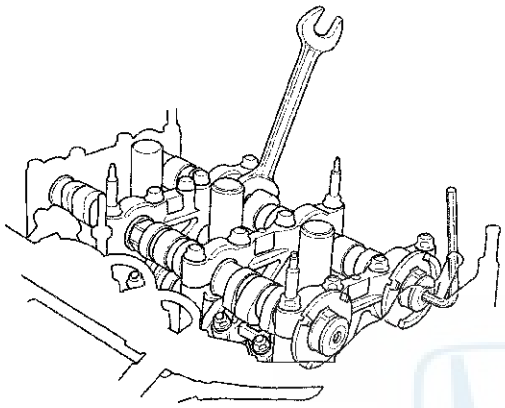

4. Remove CMP pulse plate B.

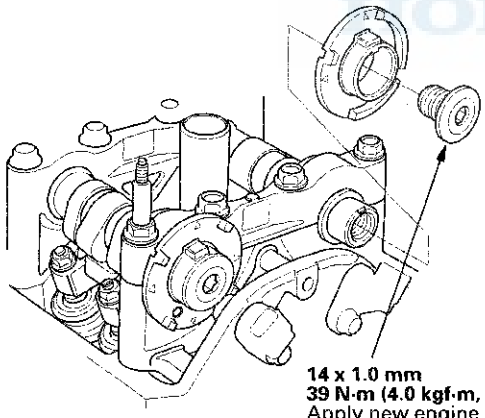

14 x 1.0 mm
39 N·m (4.0 kgf·m, 29 lbf·ft)
Apply new engine oil to the bolt threads.

5. Install CMP pulse plate B in the reverse order of removal.

VTC Actuator, Exhaust Camshaft Sprocket Replacement

Removal

1. Remove the cam chain (see page 6-13).

   NOTE: For exhaust camshaft sprocket removal, do steps 3 and 4.

2. If the VTC actuator will be reused, do these steps to avoid damaging the actuator lock pin.
   - –1 Remove the intake camshaft from the cylinder head, and seat the retard holes in the No. 1 camshaft journal with tape and a wire tie (see step 6 on page 6-8).
   - –2 Seal over one of the advance holes with tape (see step 7 on page 6-8).
   - –3 Apply air to the unsealed advance hole to release the lock (see step 8 on page 6-9).
   - –4 Remove the wire tie, the tape, and the adhesive residue from the camshaft journal.
   - –5 Temporarily reinstall the camshaft and the cam journals on the cylinder head.
3. Hold the camshaft with an open end wrench, then loosen the variable valve timing control (VTC) actuator mounting bolt or the exhaust camshaft sprocket mounting bolt.

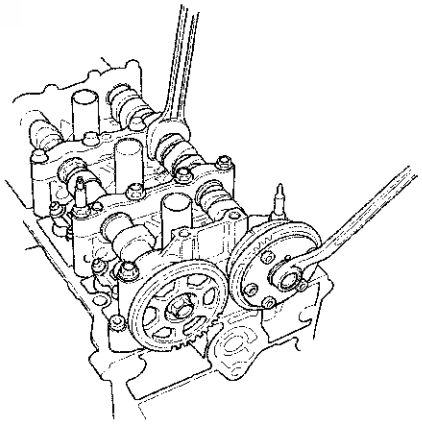

4. Remove the VTC actuator and/or the exhaust camshaft sprocket from the camshaft.

Installation

1. Install the VTC actuator and/or the exhaust camshaft sprocket onto the camshaft.

   NOTE: To avoid damage to the VTC actuator, it must be installed in the unlocked position. If necessary, temporarily install the VTC actuator mount bolt hand-tight, and unlock the actuator (see step 2 of removal).

2. Apply new engine oil to the threads of the VTC actuator mounting bolt and the exhaust camshaft mounting bolt, then install them.

3. Hold the camshaft with an open-end wrench, then tighten the bolts.

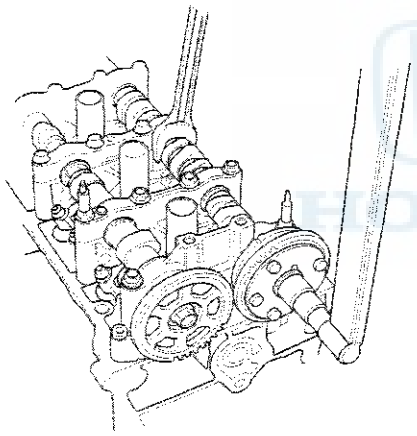

Specified Torque
VTC Actuator Mounting Bolt:
12 x 1.25 mm
113 N·m (11.5 kgf·m, 83 lbf·ft)
Exhaust Camshaft Sprocket Mounting Bolt:
10 x 1.25 mm
72 N·m (7.3 kgf·m, 53 lbf·ft)

4. Hold the camshaft with an open-end wrench, and turn the VTC actuator by hand clockwise until you hear and feel the actuator lock pin click into place.

5. Install the cam chain (see page 6-15).

Cylinder Head Inspection for Warpage

1. Remove the cylinder head (see page 6-27).

2. Inspect the camshaft (see page 6-35).

3. Check the cylinder head for warpage. Measure along the edges, and three ways across the center.

   - If warpage is less than 0.05 mm (0.002 in.) cylinder head resurfacing is not required.
   - If warpage is between 0.05 mm (0.002 in.) and 0.2 mm (0.008 in.), resurface the cylinder head.
   - The maximum resurface limit is 0.2 mm (0.008 in.) based on a height of 104 mm (4.09 in.).

Cylinder Head Height
Standard (New): 103.95—104.05 mm (4.093—4.096 in.)

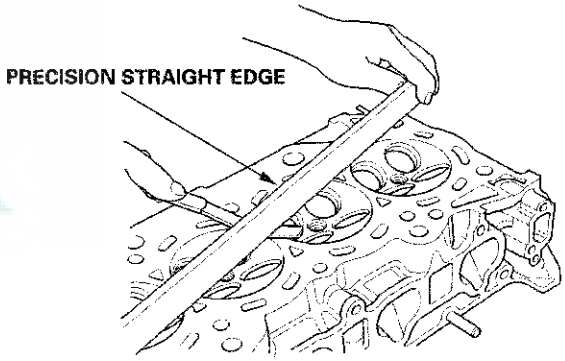

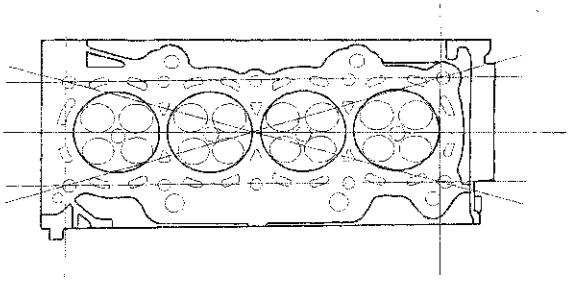

Rocker Arm Assembly Removal

1. Remove the cam chain (see page 6-13).

2. Loosen the rocker arm adjusting screws (A).

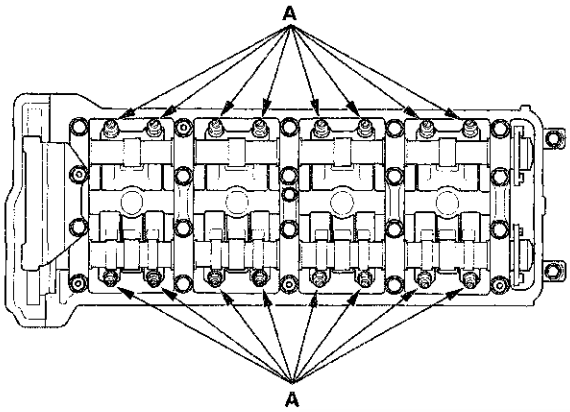

3. Remove the camshaft holder bolts. To prevent damaging the camshafts, loosen the bolts, in sequence, two turns at a time.

   NOTE: Bolt ① is not on all engines.

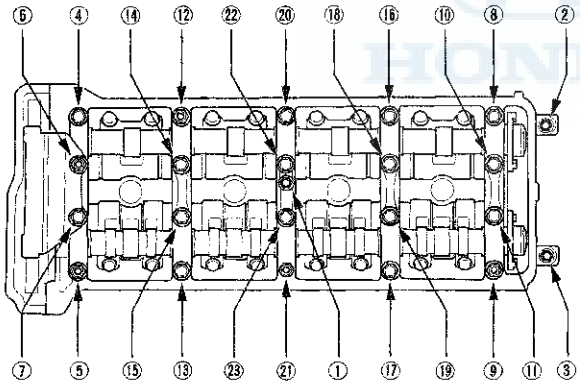

4. Remove cam chain guide B (A), the camshaft holders (B), and the camshafts (C).

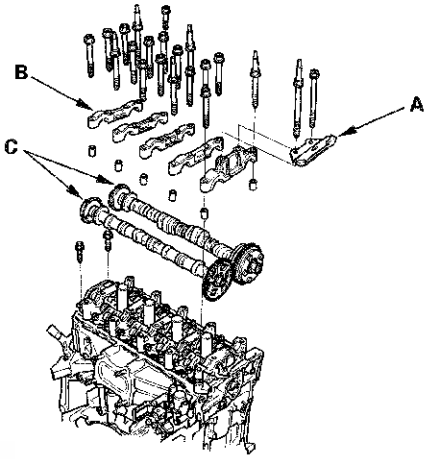

5. Insert the bolts (A) into the rocker shaft holder, then remove the rocker arm assembly (B).

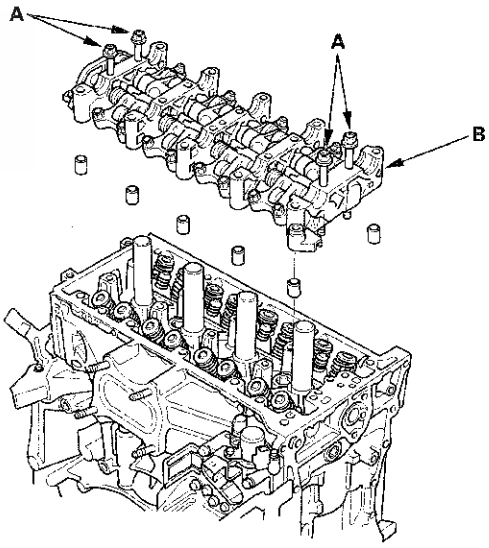

Rocker Arm and Shaft Disassembly/Reassembly

NOTE:
- Identify each part as it is removed so that each item can be reinstalled in its original position.
- Inspect the rocker arm shaft and rocker arms (see page 6-34).
- If reused, the rocker arms must be installed in the same positions.
- When removing, or installing the rocker arm assembly, do not remove the camshaft holder bolts. The bolts will keep the holders and rocker arms on the shaft.
- Prior to reassembling, clean all the parts in solvent, dry them, and apply new engine oil to any contact points.
- Bundle the intake rocker arms with rubber bands to keep them together as a set.
- When replacing the intake rocker arm assembly, remove the fastening hardware from the new intake rocker arm assembly.

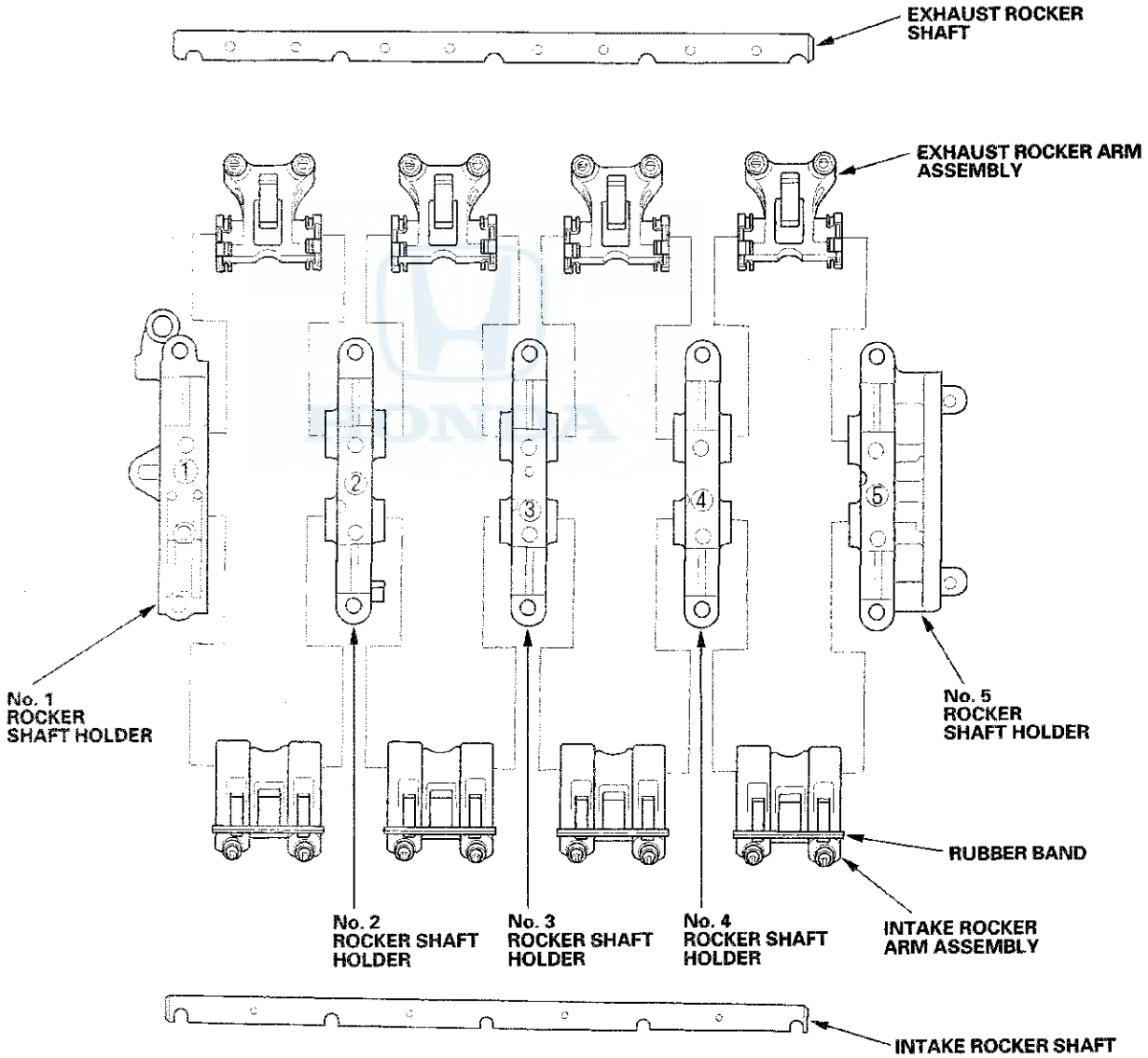

Rocker Arm and Shaft Inspection

1. Remove the rocker arm assembly (see page 6-32).

2. Disassemble the rocker arm assembly (see page 6-33).

3. Measure the diameter of the shaft at the first rocker location.

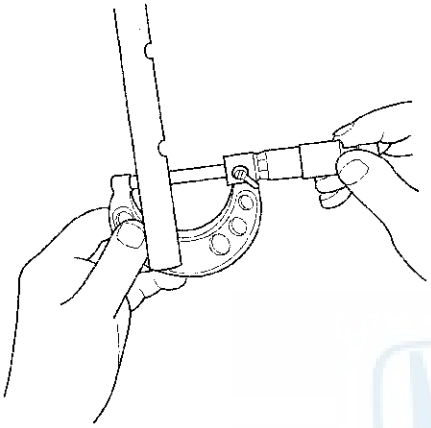

4. Zero the gauge (A) to the shaft diameter.

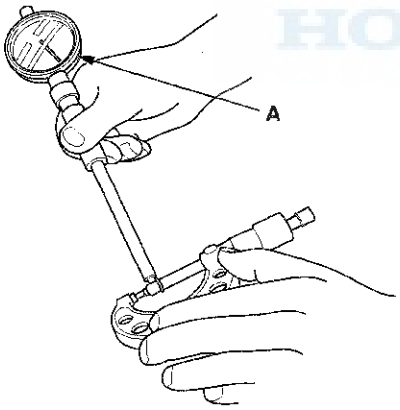

5. Measure the inside diameter of the rocker arm, and check it for an out-of-round condition.

Rocker Arm-to-Shaft Clearance
Standard (New):

Intake:	**0.018—0.059 mm (0.0007—0.0023 in.)**
Exhaust:	**0.018—0.056 mm (0.0007—0.0022 in.)**
Service Limit:	**0.08 mm (0.003 in.)**

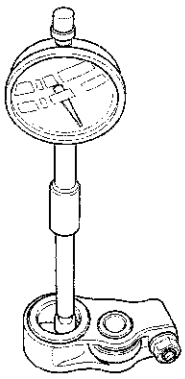

6. Repeat for all rocker arms and both shafts. If the clearance is beyond the service limit, replace the rocker shaft and all out of service limit rocker arms. If any VTEC rocker arm needs replacement, replace the rocker arms (primary, mid, and secondary), as a set.

7. Inspect the rocker arm pistons (A). Push on each piston manually. If it does not move smoothly, replace the rocker arm set.

   NOTE: Apply new engine oil to the rocker arm pistons when reassembling.

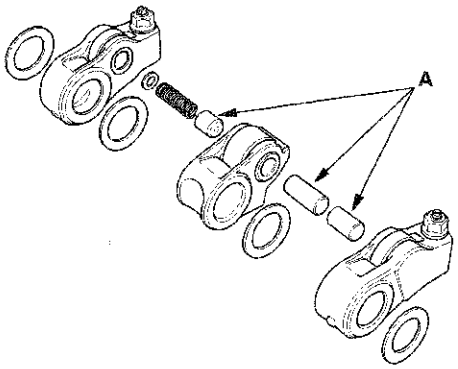

8. Install the rocker arm assembly (see page 6-43).

Camshaft Inspection

NOTE: Do not rotate the camshaft during inspection.

1. Remove the rocker arm assembly (see page 6-32).

2. Put the rocker shaft holders, camshaft, and camshaft holders on the cylinder head, then tighten the bolts, in sequence, to the specified torque.

   NOTE: If the engine does not have bolt ㉑, skip it and continue the torque sequence.

   Specified Torque
   8 x 1.25 mm
   22 N·m (2.2 kgf·m, 16 lbf·ft)
   6 x 1.0 mm
   12 N·m (1.2 kgf·m, 8.7 lbf·ft)
   6 x 1.0 mm Bolts: ㉑, ㉒, ㉓

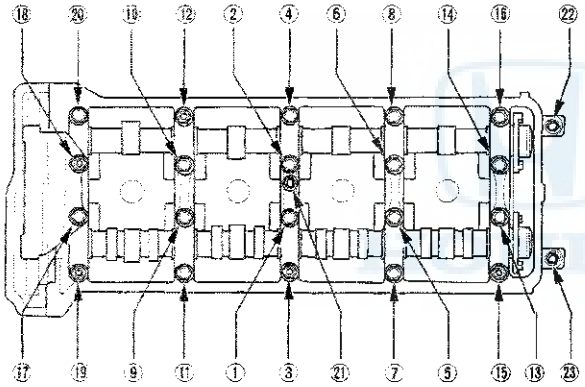

3. Seat the camshaft by pushing it away from the camshaft pulley end of the cylinder head.

4. Zero the dial indicator against the end of the camshaft, then push the camshaft back and forth, and read the end play. If the end play is beyond the service limit, replace the cylinder head and recheck. If it is still beyond the service limit, replace the camshaft.

   Camshaft End Play
   Standard (New): 0.05—0.20 mm (0.002—0.008 in.)
   Service Limit: 0.4 mm (0.02 in.)

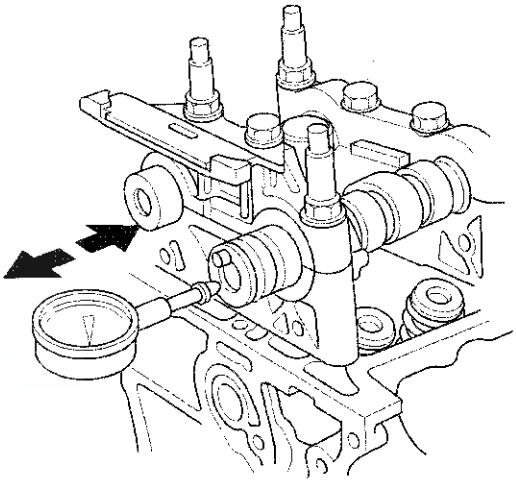

(cont'd)

Camshaft Inspection (cont'd)

5. Loosen the camshaft holder bolts two turns at a time, in a crisscross pattern. Then remove the camshaft holders from the cylinder head.

6. Lift the camshafts out of the cylinder head, and wipe them clean, then inspect the lift ramps. Replace the camshaft if any lobes are pitted, scored, or excessively worn.

7. Clean the camshaft journal surfaces in the cylinder head, then set the camshafts back in place. Place a plastigage strip across each journal.

8. Install the camshaft holders, then tighten the bolts to the specified torque as shown in step 2.

9. Remove the camshaft holders. Measure the widest portion of plastigage on each journal.

   - If the camshaft-to-holder clearance is within the service limits, go to step 11.
   - If the camshaft-to-holder clearance is beyond the service limit, and the camshaft has been replaced, replace the cylinder head.
   - If the camshaft-to-holder clearance is beyond the service limit, and the camshaft has not been replaced, go to step 10.

Camshaft-to-Holder Oil Clearance
Standard (New):

No. 1 Journal:	**0.030—0.069 mm (0.0012—0.003 in.)**
No. 2, 3, 4, 5 Journals:	**0.060—0.099 mm (0.002—0.004 in.)**
Service Limit:	**0.15 mm (0.006 in.)**

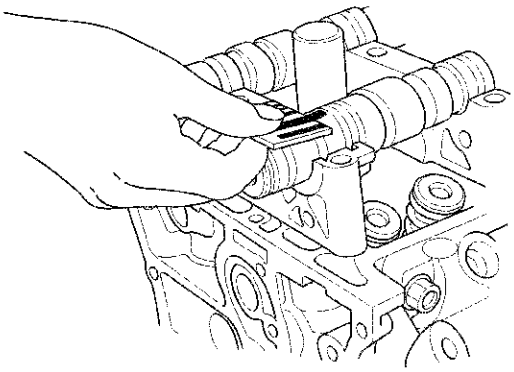

10. Check the total runout with the camshaft supported on V-blocks.

    - If the total runout of the camshaft is within the service limit, replace the cylinder head.
    - If the total runout is beyond the service limit, replace the camshaft and recheck the camshaft-to-holder oil clearance. If the oil clearance is still beyond the service limit, replace the cylinder head.

Camshaft Total Runout
Standard (New): 0.03 mm (0.0012 in.) max.
Service Limit: 0.04 mm (0.002 in.)

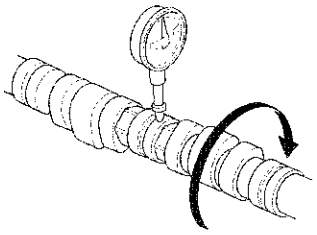

11. Measure the cam lobe height.

Cam Lobe Height Standard (New):

	INTAKE	EXHAUST
PRI	33.744 mm (1.3285 in.)	34.291 mm (1.3500 in.)
MID	35.456 mm (1.3959 in.)	
SEC	33.744 mm (1.3285 in.)	

PRI: Primary MID: Mid SEC: Secondary
C/C: Cam Chain

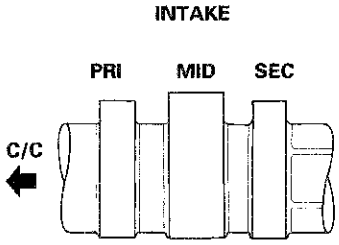

Valve, Spring, and Valve Seal Removal

Special Tools Required
Valve spring compressor attachment 07757-PJ1010A

Identify the valves and the valve springs as they are removed so that each item can be reinstalled in its original position.

1. Remove the cylinder head (see page 6-27).

2. Using an appropriate-sized socket (A) and plastic mallet (B), lightly tap the spring retainer to loosen the valve cotters.

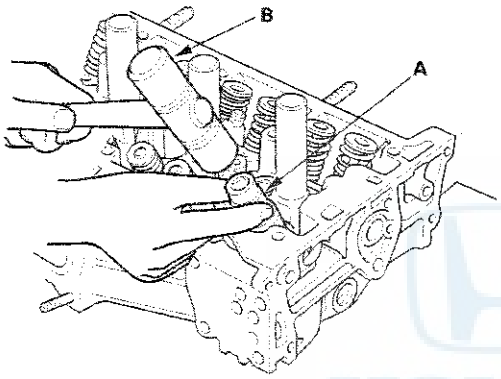

3. Install the valve spring compressor attachment and the valve spring compressor. Compress the spring, and remove the valve cotters.

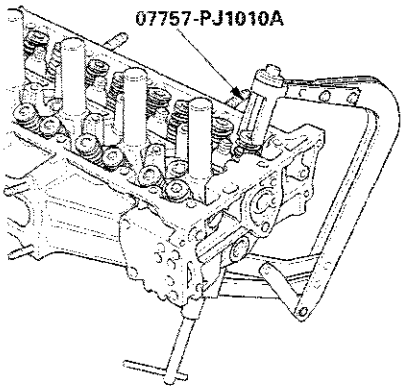

4. Remove the valve spring compressor and the valve spring compressor attachment, then remove the spring retainer and the valve spring.

5. Install the valve guide seal remover.

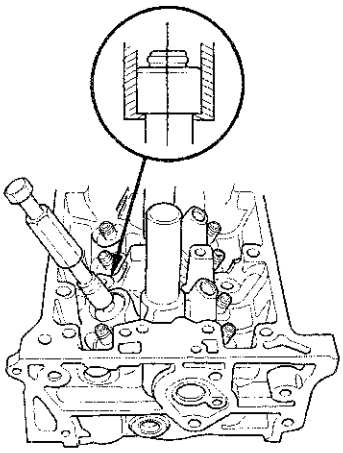

6. Remove the valve seal.

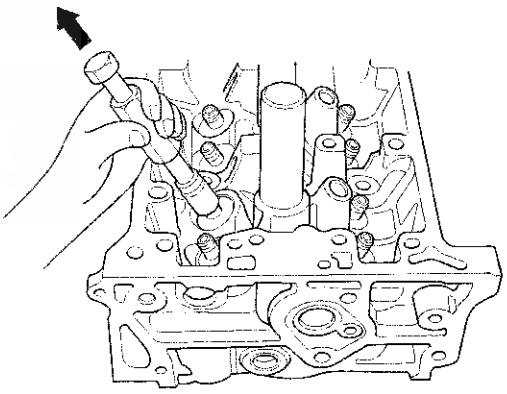

Valve Inspection

1. Remove the valves (see page 6-37).

2. Measure the valve in these areas.

Intake Valve Dimensions
A Standard (New): 35.85—36.15 mm (1.411—1.423 in.)
B Standard (New): 108.5—109.1 mm (4.272—4.295 in.)
C Standard (New): 5.475—5.485 mm (0.2156—0.2159 in.)
C Service Limit: 5.445 mm (0.214 in.)

Exhaust Valve Dimensions
A Standard (New): 30.85—31.15 mm (1.215—1.226 in.)
B Standard (New): 108.4—109.0 mm (4.268—4.291 in.)
C Standard (New): 5.450—5.460 mm (0.2146—0.2150 in.)
C Service Limit: 5.42 mm (0.213 in.)

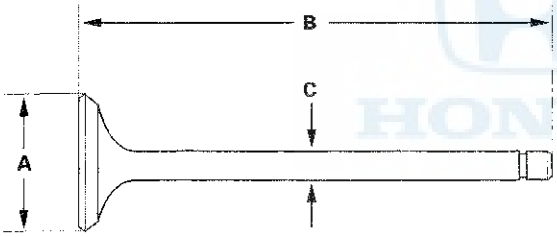

Valve Stem-to-Guide Clearance Inspection

1. Remove the valves (see page 6-37).

2. Slide the valve out of its guide about 10 mm (0.39 in.), then measure the stem-to-guide clearance with a dial indicator while rocking the stem in the direction of normal thrust (wobble method).
   - If the measurement exceeds the service limit, recheck it using a new valve.
   - If the measurement is now within the service limit, reassemble using a new valve.
   - If the measurement with a new valve still exceeds the service limit, go to step 3.

Intake Valve Stem-to-Guide Clearance
Standard (New): 0.06—0.11 mm (0.002—0.004 in.)
Service Limit: 0.16 mm (0.006 in.)

Exhaust Valve Stem-to-Guide Clearance
Standard (New): 0.11—0.16 mm (0.004—0.006 in.)
Service Limit: 0.22 mm (0.009 in.)

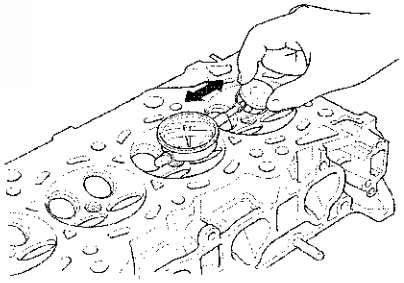

3. Subtract the O.D. of the valve stem, measured with a micrometer, from the I.D. of the valve guide, measured with an inside micrometer or ball gauge. Take the measurements in three places along the valve stem and three places inside the valve guide. The difference between the largest guide measurement and the smallest stem measurement should not exceed the service limit.

Intake Valve Stem-to-Guide Clearance
Standard (New): 0.030—0.055 mm (0.0012—0.0022 in.)
Service Limit: 0.08 mm (0.003 in.)

Exhaust Valve Stem-to-Guide Clearance
Standard (New): 0.055—0.080 mm (0.0022—0.0031 in.)
Service Limit: 0.11 mm (0.0043 in.)

Valve Guide Replacement

Special Tools Required
- Valve guide driver, 5.5 mm 07742-0010100
- Valve guide reamer, 5.5 mm 07HAH-PJ7A100

1. Inspect the valve stem-to-guide clearance (see page 6-38).

2. As illustrated, use a commercially available air-impact valve guide driver (A) modified to fit the diameter of the valve guides. In most cases, the same procedure can be done using the valve guide driver, 5.5 mm and a conventional hammer.

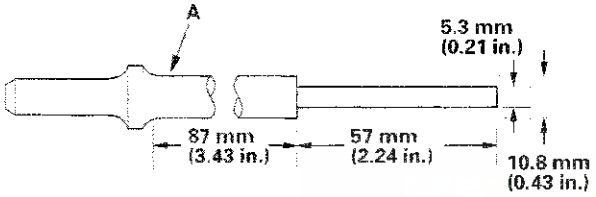

3. Select the proper replacement guides, and chill them in the freezer section of a refrigerator for at least an hour.

4. Use a hot plate or oven to evenly heat the cylinder head to 300 °F (150 °C). Monitor the temperature with a cooking thermometer. Do not get the head hotter than 300 °F (150 °C); excessive heat may loosen the valve seats.

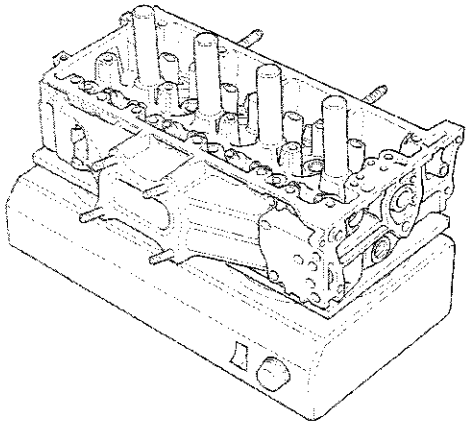

5. Working from the camshaft side, use the driver and an air hammer to drive the guide about 2 mm (0.1 in.) towards the combustion chamber. This will knock off some of the carbon and make removal easier. Hold the air hammer directly in line with the valve guide to prevent damaging the driver.

6. Turn the head over, and drive the guide out toward the camshaft side of the head.

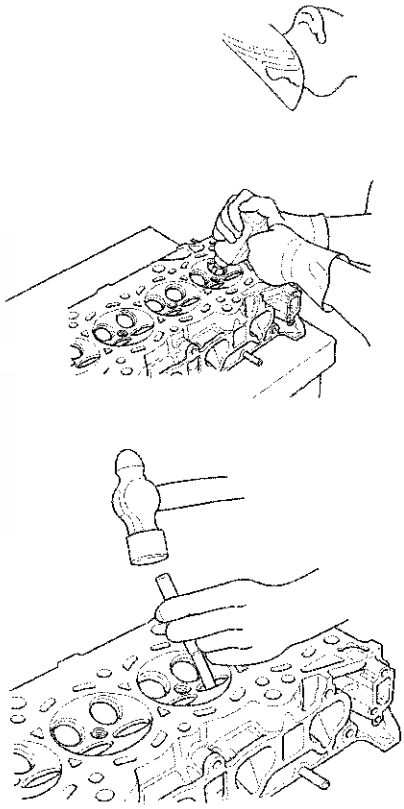

7. If a valve guide will not move, drill it out with a 8 mm (5/16 in.) bit, then try again.

   NOTE: Drill guides only in extreme cases; you could damage the cylinder head if the guide breaks.

8. Remove the new guide(s) from the freezer, one at a time, as you need them.

(cont'd)

Valve Guide Replacement (cont'd)

9. Apply a thin coat of new engine oil to the outside of the new valve guide. Install the guide from the camshaft side of the head; use the valve guide driver to drive the guide in to the specified installed height (A) of the guide (B). If you have all 16 guides to do, you may have to reheat the head.

Valve Guide Installed Height
Intake: 15.2—16.2 mm (0.598—0.638 in.)
Exhaust: 15.5—16.5 mm (0.610—0.650 in.)

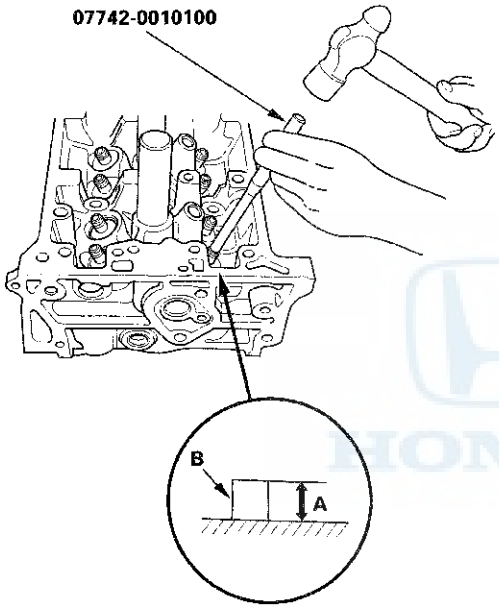

10. Coat both the valve guide reamer, 5.5 mm and the valve guide with cutting oil.

11. Rotate the reamer clockwise to the full length of the valve guide bore.

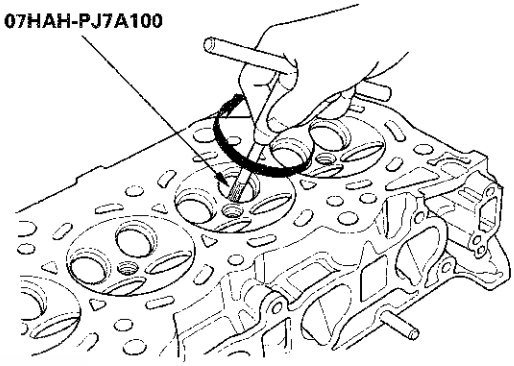

12. Continue to rotate the reamer clockwise while removing it from the bore.

13. Thoroughly wash the guide in detergent and water to remove any cutting residue.

14. Check the clearances with a valve (see page 6-38). Verify that a valve slides into the intake and exhaust valve guides without sticking.

15. Inspect the valve seating, if necessary renew the valve seat using a valve seat cutter (see page 6-41).

Valve Seat Reconditioning

1. Inspect the valve stem-to-guide clearance (see page 6-38). If the valve guides are worn, replace them (see page 6-39) before cutting the valve seats.

2. Renew the valve seats in the cylinder head using a valve seat cutter.

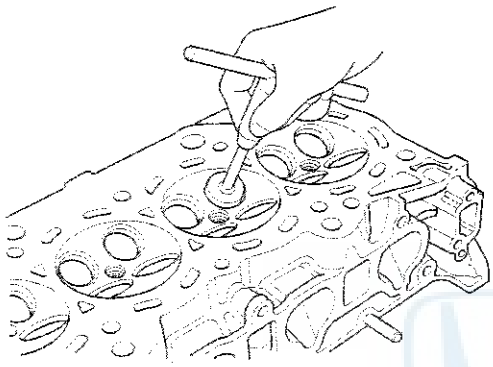

3. Carefully cut a 45 ° seat, removing only enough material to ensure a smooth and concentric seat.

4. Bevel the upper and lower edges at the angles shown in the illustration.
   Check the width of the seat and adjust accordingly.

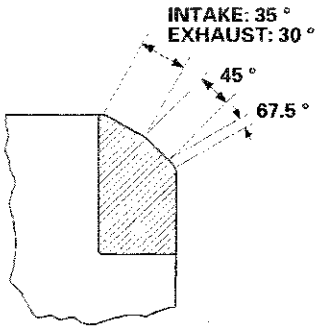

5. Make one more very light pass with the 45 ° cutter to remove any possible burrs caused by the other cutters.

   Valve Seat Width
   Standard (New): 1.25—1.55 mm (0.049—0.061 in.)
   Service Limit: 2.00 mm (0.079 in.)

6. After resurfacing the seat, inspect for even valve seating. Apply Prussian Blue compound (A) to the valve face. Insert the valve in its original location in the head, then lift it and snap it closed against the seat several times.

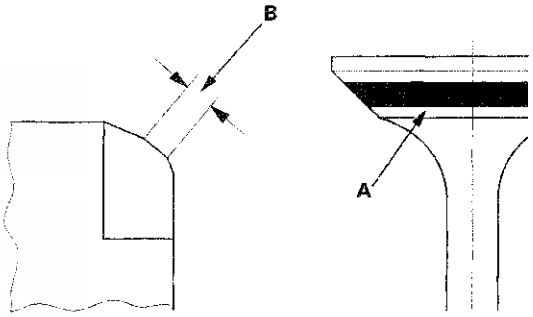

7. The actual valve seating surface (B), as shown by the blue compound, should be centered on the seat.

   - If it is too high (closer to the valve stem), you must make a second cut with the 67.5 ° cutter to move it down, then one more cut with the 45 ° cutter to restore seat width.
   - If it is too low (close to the valve edge), you must make a second cut with the 35 ° cutter (intake side) or the 30 ° cutter (exhaust side) to move it up, then make one more cut with the 45 ° cutter to restore seat width.

   NOTE: The final cut should always be made with the 45 ° cutter.

(cont'd)

Valve Seat Reconditioning (cont'd)

8. Insert the intake and exhaust valves in the head, and measure the valve stem installed height (A).

   Intake Valve Stem Installed Height
   Standard (New): 44.0—44.5 mm (1.73—1.75 in.)
   Service Limit: 44.7 mm (1.76 in.)

   Exhaust Valve Stem Installed Height
   Standard (New): 44.0—44.5 mm (1.73—1.75 in.)
   Service Limit: 44.7 mm (1.76 in.)

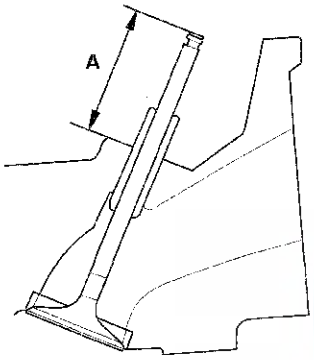

9. If valve stem installed height is beyond the service limit, replace the valve and recheck. If it is still beyond the service limit, replace the cylinder head; the valve seat in the head is too deep.

Valve, Spring, and Valve Seal Installation

Special Tools Required
- Stem seal driver 07PAD-0010000
- Valve spring compressor attachment 07757-PJ1010A

1. Coat the valve stems with new engine oil. Install the valves in the valve guides.
2. Check that the valves move up and down smoothly.
3. Install the spring seats on the cylinder head.
4. Install the new valve seals (A) using the 5.5 mm side of the stem seal driver (B).

   NOTE: The exhaust valve seal (C) has a black spring (D), and the intake valve seal (E) has a white spring (F). They are not interchangeable.

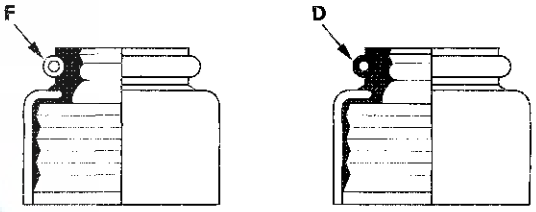

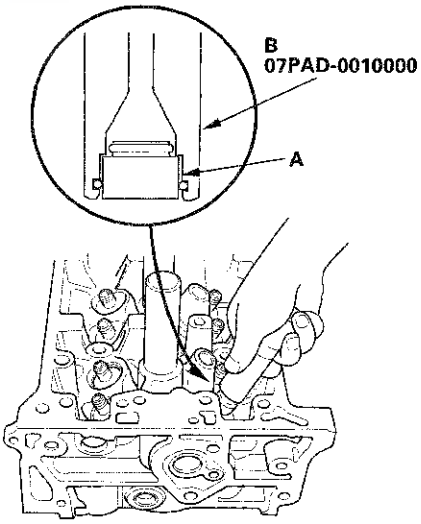

5. Install the valve spring and the spring retainer. Place the end of the valve spring with the closely wound coils toward the cylinder head.

6. Install the valve spring compressor attachment and the valve spring compressor. Compress the spring, and install the valve cotters.

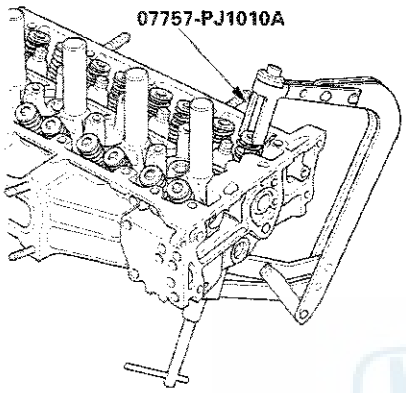

7. Remove the valve spring compressor and the valve spring compressor attachment.

8. Lightly tap the end of each valve stem two or three times with a plastic mallet (A) to ensure proper seating of the valve and the valve cotters. Tap the valve stem only along its axis so you do not bend the stem.

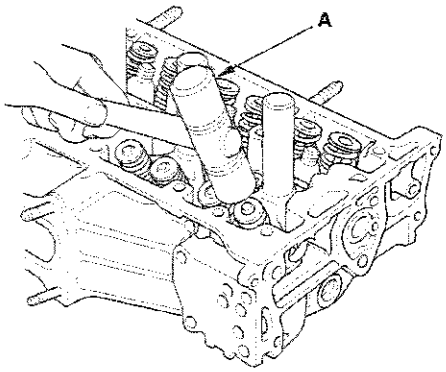

Rocker Arm Assembly Installation

1. Reassemble the rocker arm assembly (see page 6-32).

2. Clean and dry the No. 5 rocker shaft holder mating surface.

3. Apply liquid gasket, P/N 08717-0004, 08718-0001, 08718-0003, or 08718-0009, evenly to the cylinder head mating surface of the No. 5 rocker shaft holder, and to the inside edge of the threaded bolt holes. Install the component within 5 minutes of applying the liquid gasket.

   NOTE:
   - If you apply liquid gasket P/N 08718-0012, the component must be installed within 4 minutes.
   - If too much time has passed after applying the liquid gasket, remove the old liquid gasket and residue, then reapply new liquid gasket.

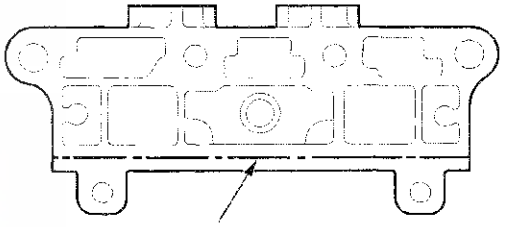

4. Insert the bolts (A) into the rocker shaft holder, then install the rocker arm assembly (B) on the cylinder head.

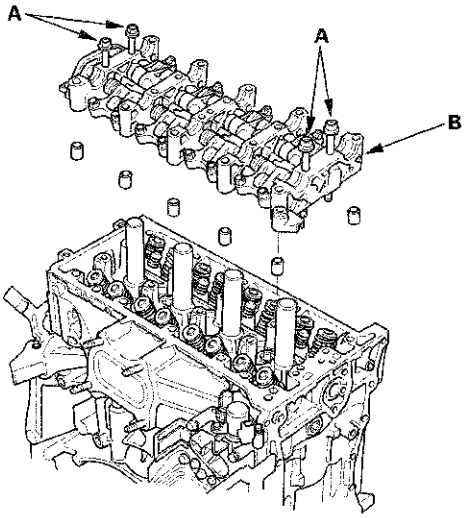

5. Remove the bolts from the rocker shaft holder.

(cont'd)

Rocker Arm Assembly Installation (cont'd)

6. Make sure the punch marks on the variable valve timing control (VTC) actuator and the exhaust camshaft sprocket are facing up, then set the camshafts (A) in the holder. Apply new engine oil to the camshaft journals and lobes.

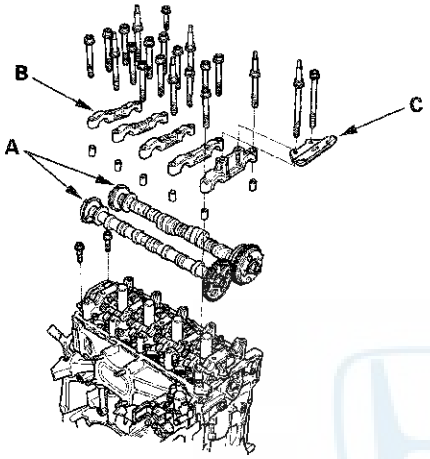

7. Set the camshaft holders (B) and the cam chain guide B (C) in place.

8. Tighten the bolts to the specified torque.

   NOTE: If the engine does not have bolt ㉑, skip it and continue the torque sequence.

   Specified Torque
   8 x 1.25 mm
   22 N·m (2.2 kgf·m, 16 lbf·ft)
   6 x 1.0 mm
   12 N·m (1.2 kgf·m, 8.7 lbf·ft)
   6 x 1.0 mm Bolts: ㉑, ㉒, ㉓

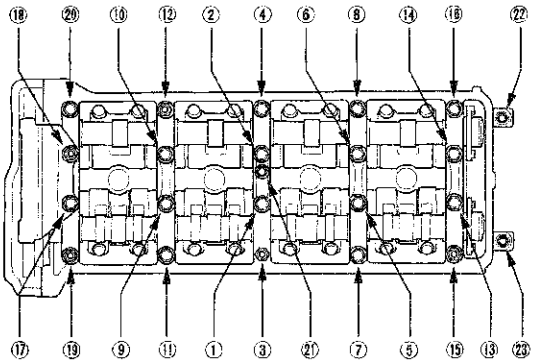

9. Install the cam chain (see page 6-15), then adjust the valve clearance (see page 6-9).

Cylinder Head Installation

1. Install a new coolant separator (A) in the engine block whenever the engine block is replaced.

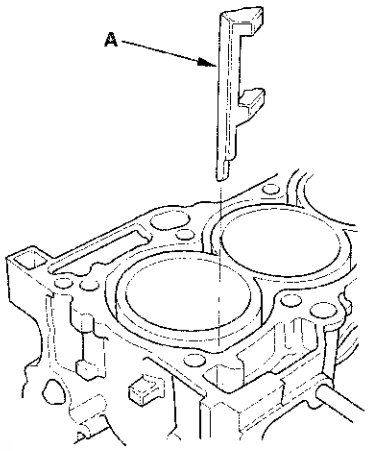

2. Clean the cylinder head and the engine block surface.

3. Install the new cylinder head gasket (A) and the dowel pins (B) on the engine block. Always use a new cylinder head gasket.

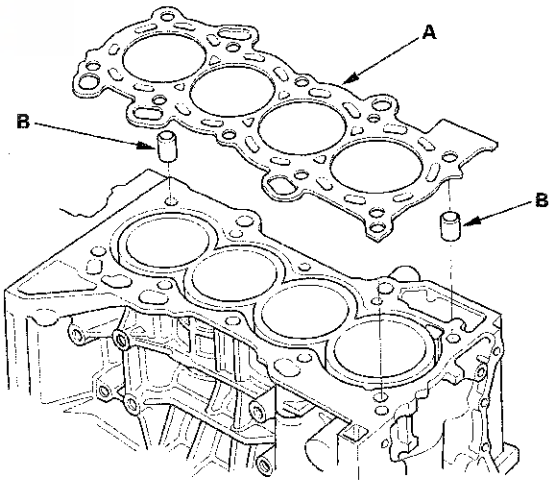

4. Set the crankshaft to top dead center (TDC). Align the TDC mark (A) on the crankshaft sprocket with the pointer (B) on the engine block.

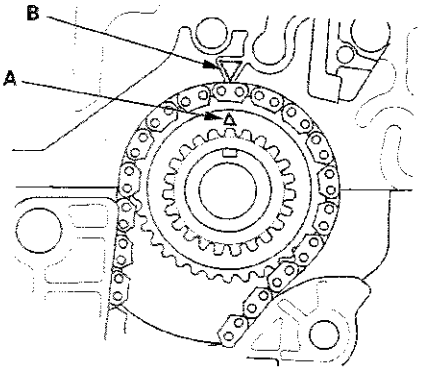

5. Install the cylinder head on the engine block.

6. Measure the diameter of each cylinder head bolt at point A and point B.

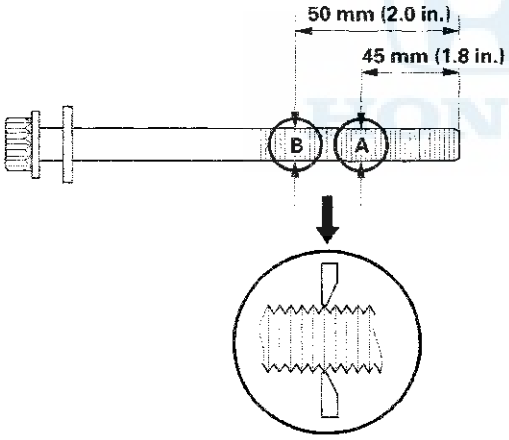

7. If either diameter is less than 10.6 mm (0.42 in.), replace the cylinder head bolt.

8. Apply new engine oil to the threads and under the bolt heads of all cylinder head bolts.

9. Tighten the cylinder head bolts in sequence to 39 N·m (4.0 kgf·m, 29 lbf·ft). Use a beam-type torque wrench. When using a preset click-type torque wrench, be sure to tighten slowly and do not overtighten. If a bolt makes any noise while you are torquing it, loosen the bolt and retighten it from the first step.

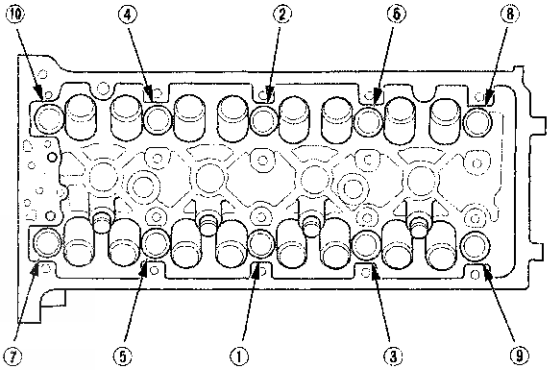

10. After torquing, tighten all cylinder head bolts in two steps (90 ° per step) using the sequence shown in step 9. If you are using a new cylinder head bolt, tighten the bolt an extra 90 °.

NOTE: Remove the cylinder head bolt if you tightened it beyond the specified angle, and go back to step 6 of the procedure. Do not loosen it back to the specified angle.

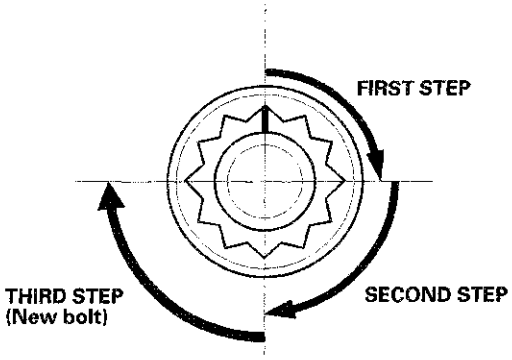

(cont'd)

Cylinder Head Installation (cont'd)

11. Install the rocker arm assembly (see page 6-43).

12. Install the cam chain (see page 6-15).

13. Connect the following engine wire harness connectors, and install the wire harness clamps to the cylinder head:

    - Engine coolant temperature (ECT) sensor 1 connector
    - Camshaft position (CMP) sensor A (Intake) connector
    - Camshaft position (CMP) sensor B (Exhaust) connector
    - Rocker arm oil control solenoid connector
    - Rocker arm oil pressure switch connector
    - Evaporative emission (EVAP) canister purge valve connector
    - Variable valve timing control (VTC) oil control solenoid valve connector
    - Engine oil pressure switch connector

14. Install the two bolts (A) securing the connecting pipe.

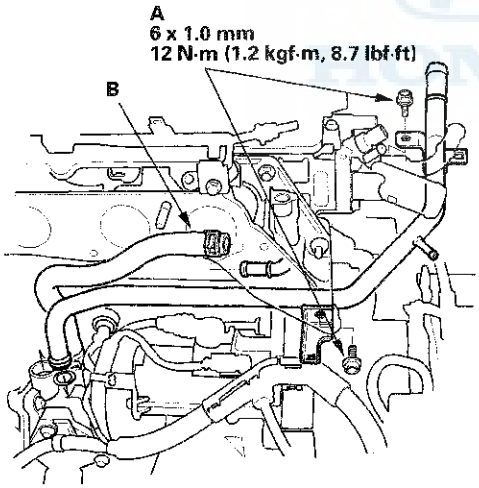

15. Connect the water bypass hose (B).

16. Connect the upper radiator hose (A), the heater hoses (B), and the water bypass hose (C).

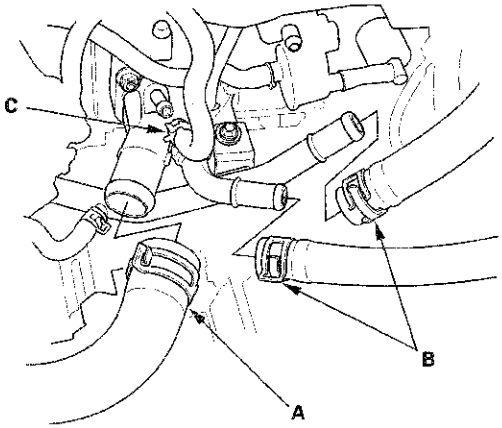

17. Install the four bolts securing the EVAP canister purge valve bracket.

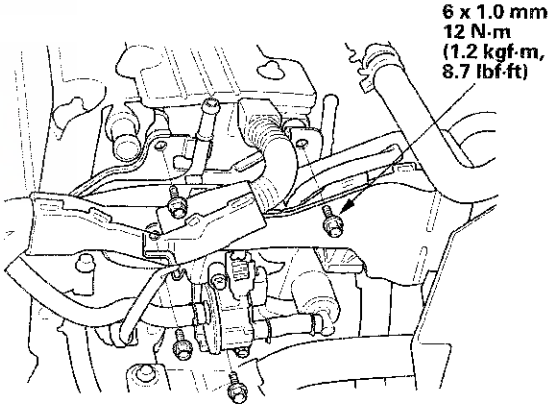

18. Connect the four fuel injector connectors (A), the engine mount control solenoid valve connector (B), and install the ground cables (C).

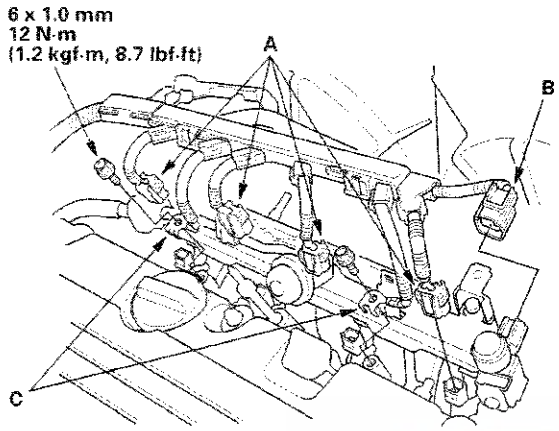

19. Connect the fuel feed hose (A) (see page 11-343), then install the quick-connect fitting cover (B).

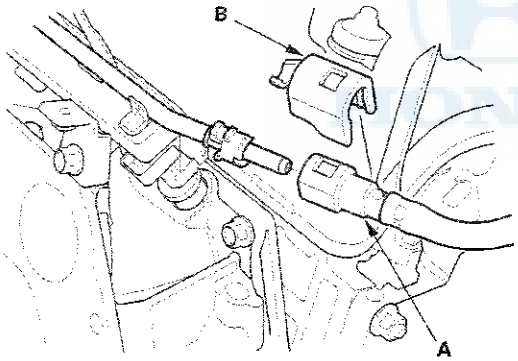

20. Connect the EVAP canister hose (A).

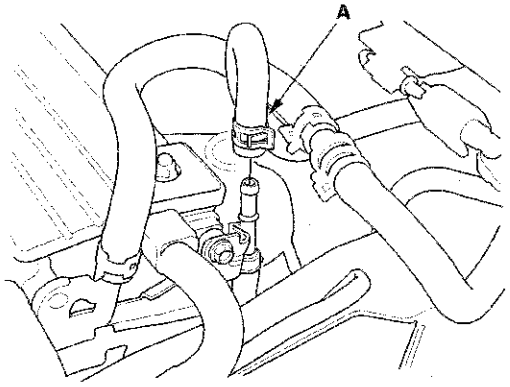

21. Install the catalytic converter (see page 11-367).

22. Install the intake manifold (see page 9-5).

23. Install the drive belt (see page 4-30).

24. Install the strut brace (if equipped) (see page 20-289).

25. After installation, check that all tubes, hoses, and connectors are installed correctly.

26. Inspect for fuel leaks. Turn the ignition switch to ON (II) (do not operate the starter) so the fuel pump runs for about 2 seconds and pressurizes the fuel line. Repeat this operation three times, then check for fuel leakage at any point in the fuel line.

27. Refill the radiator with engine coolant, and bleed the air from the cooling system with the heater valve open (see step 6 on page 10-6).

28. Check for fluid leaks.

29. Do the engine control module (ECM)/powertrain control module (PCM) idle lean procedure (see page 11-317).

30. Do the crankshaft position (CKP) pattern clear/CKP pattern lean procedure (see page 11-5).

31. Inspect the idle speed (see page 11-316).

32. Inspect the ignition timing (see page 4-19).

Sealing Bolt Installation

NOTE: When installing the sealing bolt, always use a new washer.

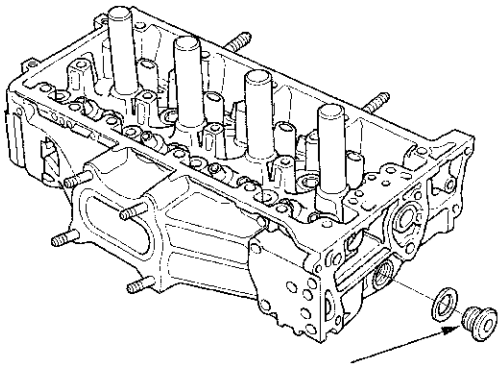

22 x 1.5 mm
74 N·m (7.5 kgf·m, 54 lbf·ft)

HONDA

Navigation Tools: Click on the "Table of Contents" below, or use the Bookmarks to the left.

Engine Mechanical

Cylinder Head (All Models Except PZEV) 6-1

Cylinder Head (PZEV Model)

Special Tools 6-50
Component Location Index 6-51
Engine Compression Inspection 6-54
VTEC Rocker Arm Test 6-55
VTC Actuator Inspection 6-57
Valve Clearance Adjustment 6-58
Crankshaft Pulley Removal and Installation 6-61
Cam Chain Removal 6-62
Cam Chain Installation 6-64
Auto-tensioner Removal and Installation 6-69
Chain Case Oil Seal Installation 6-71
Cam Chain Inspection 6-72
Cylinder Head Cover Removal 6-73
Cylinder Head Cover Installation 6-74
Cylinder Head Removal 6-76
CMP Pulse Plate A Replacement 6-78
CMP Pulse Plate B Replacement 6-79
VTC Actuator, Exhaust Camshaft Sprocket Replacement 6-79
Cylinder Head Inspection for Warpage 6-80
Rocker Arm Assembly Removal 6-81
Rocker Arm and Shaft Disassembly/Reassembly 6-82
Rocker Arm and Shaft Inspection 6-83
Camshaft Inspection 6-84
Valve, Spring, and Valve Seal Removal 6-86
Valve Inspection 6-87
Valve Stem-to-Guide Clearance Inspection 6-88
Valve Guide Replacement 6-88
Valve Seat Reconditioning 6-90
Valve, Spring, and Valve Seal Installation 6-92
Rocker Arm Assembly Installation 6-93
Cylinder Head Installation 6-94
Sealing Bolt Installation 6-97

Special Tools

Ref. No.	Tool Number	Description	Qty
①	07AAB-RJAA100	Crankshaft Pulley Holder	1
②	07AAB-RWCA120	Camshaft Lock Pin Set	1
③	07AAJ-PNAA101	Air Pressure Regulator	1
④	07AAJ-RWCA100	Cam Chain Inspection Gauge	1
⑤	07HAH-PJ7A100	Valve Guide Reamer, 5.5 mm	1
⑥	07JAA-001020A	Socket, 19 mm	1
⑦	07JAB-001020B	Holder Handle	1
⑧	07MAA-PR70110	Adjuster	1
⑨	07MAA-PR70120	Locknut Wrench	1
⑩	07PAD-0010000	Stem Seal Driver	1
⑪	07ZAJ-PNAA101	VTEC Air Adapter	2
⑫	07ZAJ-PNAA200	VTEC Air Stopper	1
⑬	07ZAJ-PNAA300	Air Joint Adapter	1
⑭	07742-0010100	Valve Guide Driver, 5.5 mm	1
⑮	07746-0010400	Attachment, 52 x 55 mm	1
⑯	07749-0010000	Driver	1
⑰	07757-PJ1010A	Valve Spring Compressor Attachment	1

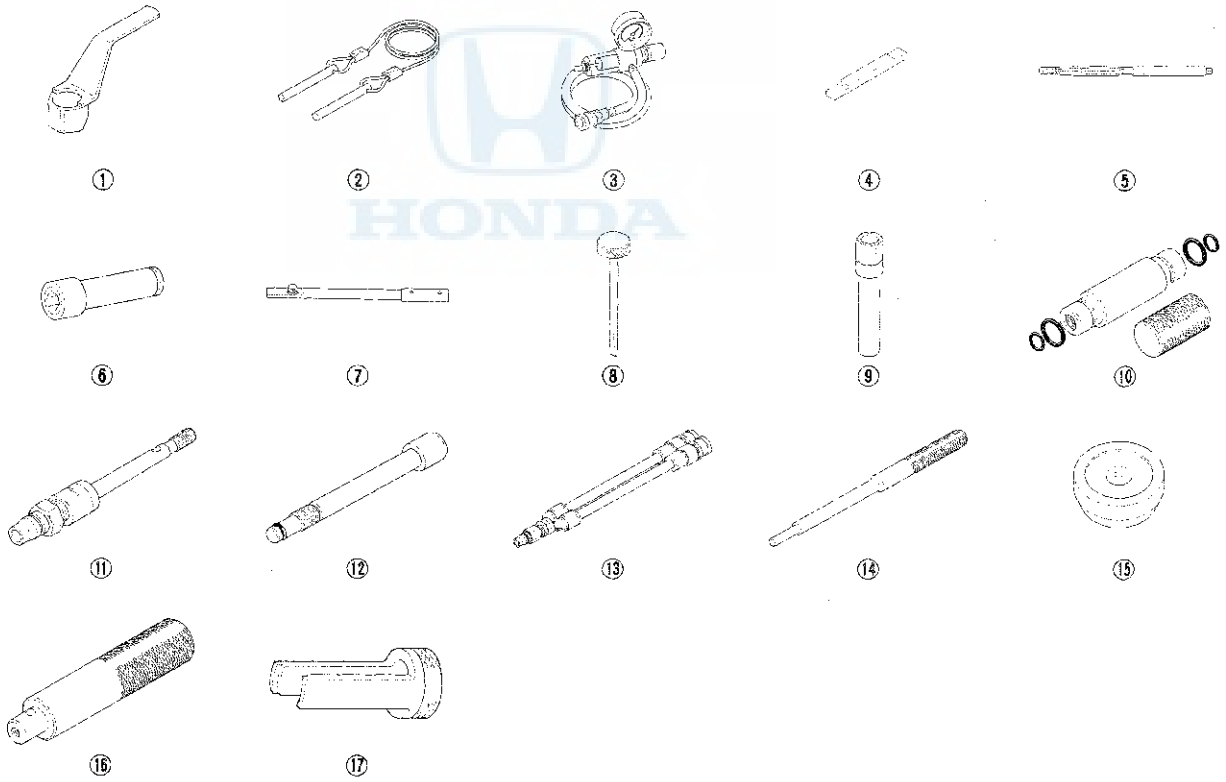

Component Location Index

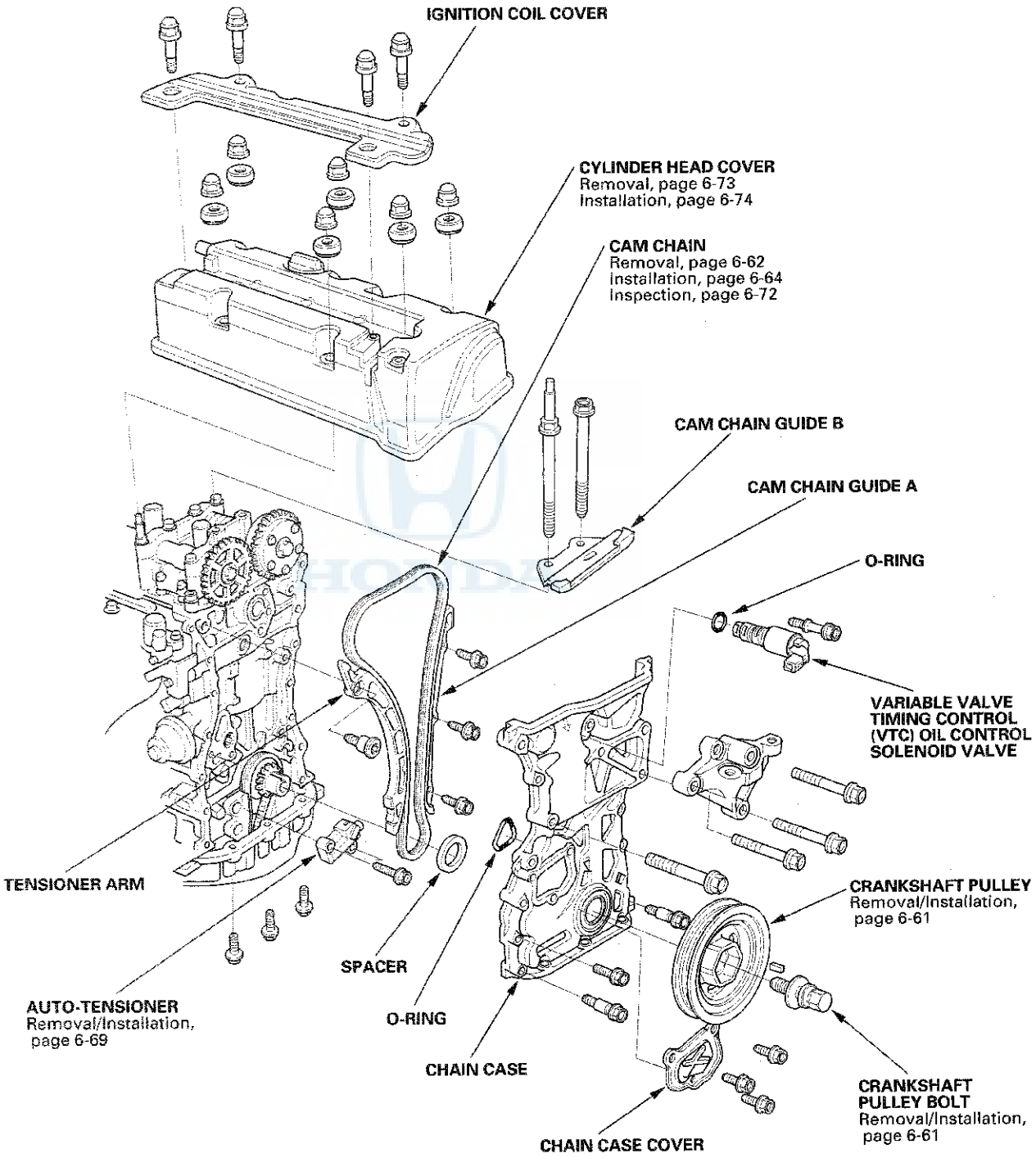

(cont'd)

Component Location Index (cont'd)

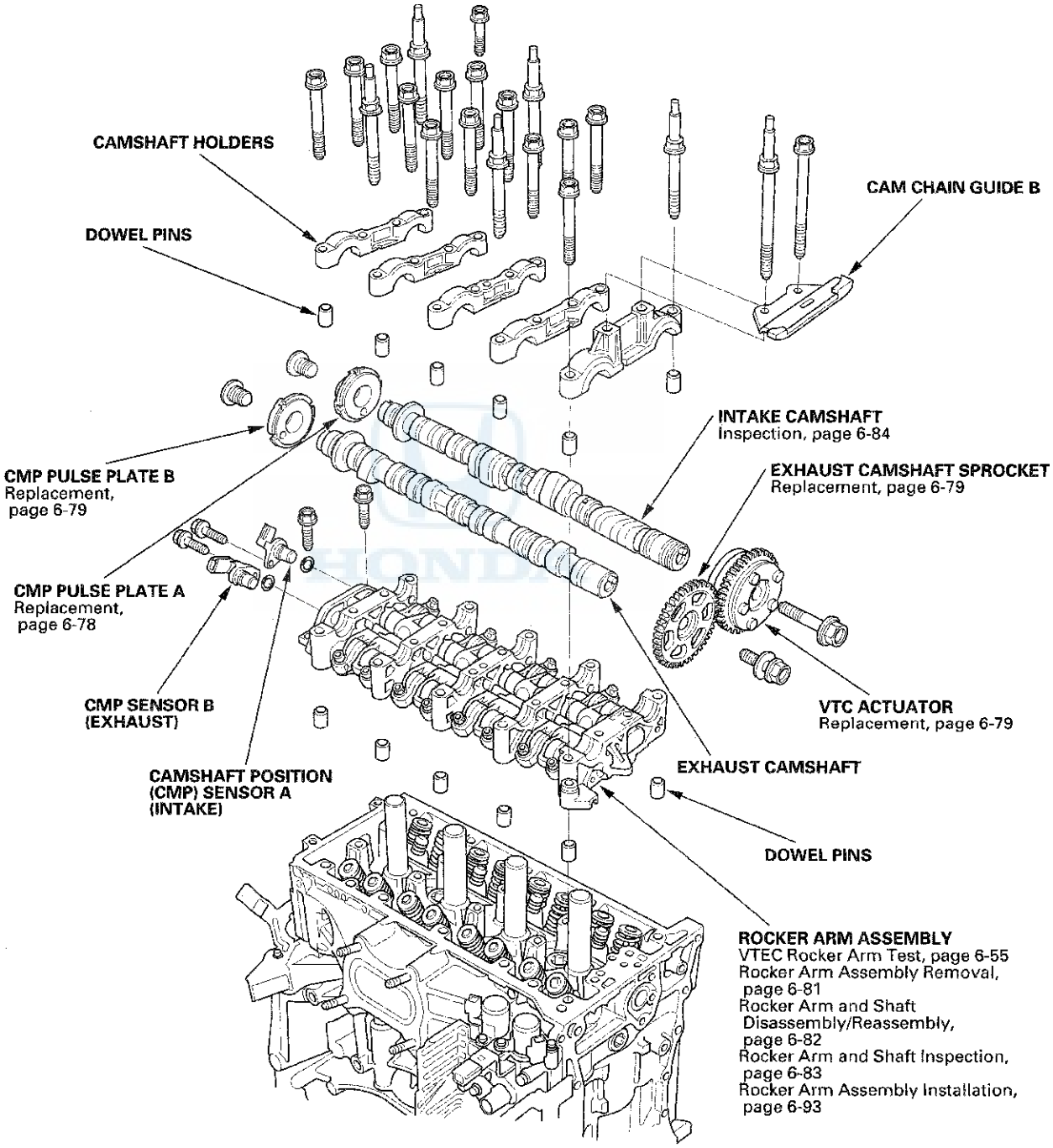

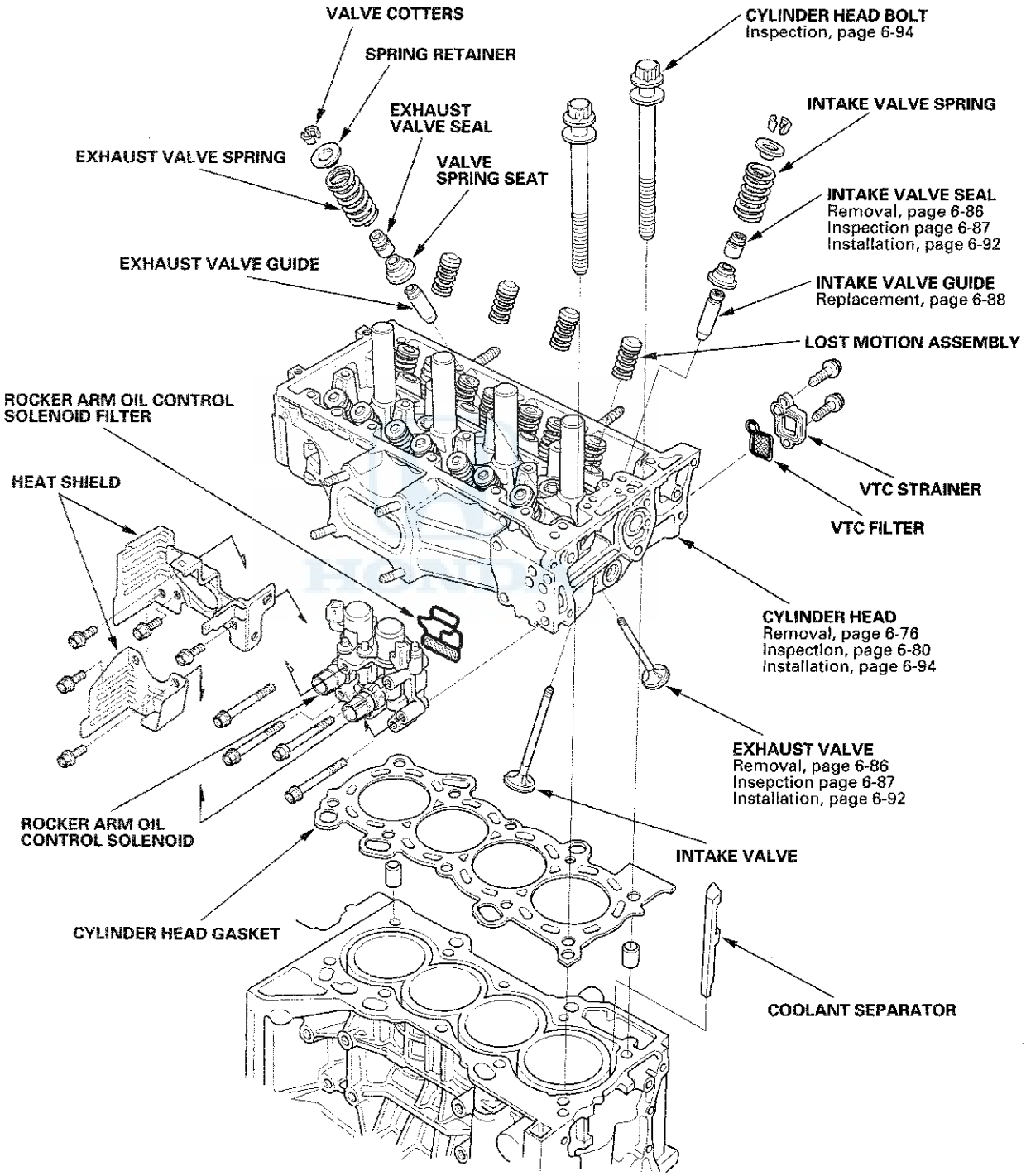
VALVE COTTERS
SPRING RETAINER
EXHAUST VALVE SEAL
EXHAUST VALVE SPRING
VALVE SPRING SEAT
EXHAUST VALVE GUIDE
CYLINDER HEAD BOLT
Inspection, page 6-94
INTAKE VALVE SPRING
INTAKE VALVE SEAL
Removal, page 6-86
Inspection page 6-87
Installation, page 6-92
INTAKE VALVE GUIDE
Replacement, page 6-88
LOST MOTION ASSEMBLY
ROCKER ARM OIL CONTROL SOLENOID FILTER
HEAT SHIELD
VTC STRAINER
VTC FILTER
CYLINDER HEAD
Removal, page 6-76
Inspection, page 6-80
Installation, page 6-94
EXHAUST VALVE
Removal, page 6-86
Insepction page 6-87
Installation, page 6-92
ROCKER ARM OIL CONTROL SOLENOID
INTAKE VALVE
CYLINDER HEAD GASKET
COOLANT SEPARATOR

Engine Compression Inspection

NOTE: After this inspection, you must reset the powertrain control module (PCM), otherwise the PCM will continue to stop the fuel injectors from operating.

1. Warm up the engine to normal operating temperature (cooling fan comes on).
2. Turn the ignition switch to LOCK (0).
3. Connect the HDS to the data link connector (DLC) (see step 2 on page 11-3).
4. Turn the ignition switch to ON (II).
5. Make sure the HDS communicates, with the vehicle and the PCM. If it does not communicate, troubleshoot the DLC circuit (see page 11-192).
6. Select ALL INJECTORS STOP in the PGM-FI, INSPECTION menu with the HDS.
7. Turn the ignition switch to LOCK (0).
8. Remove the four ignition coils (see page 4-20).
9. Remove the four spark plugs.
10. Attach a compression gauge to the spark plug hole.

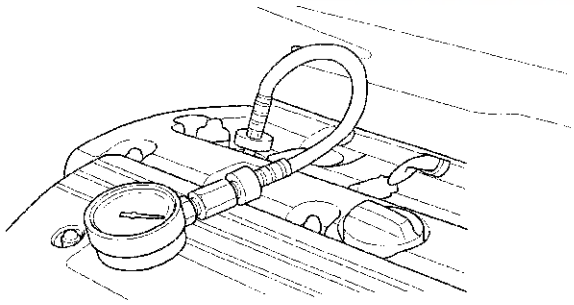

11. Step on the accelerator pedal to open the throttle fully, then crank the engine with the starter motor, and measure the compression.

    Compression Pressure:
    Above 930 kPa (9.5 kgf/cm^2, 135 psi)

12. Measure the compression on the remaining cylinders.

    Maximum Variation:
    Within 200 kPa (2.0 kgf/cm^2, 28 psi)

13. If the compression is not within specifications, check the following items, then remeasure the compression.

    - Incorrect valve clearance
    - Confirmation of cam timing
    - Damaged of worn cam lobes
    - Damaged or worn valves and seats
    - Damaged cylinder head gasket
    - Damaged or worn piston rings
    - Damaged or worn piston and cylinder bore

14. Remove the compression gauge from the spark plug hole.
15. Install the four spark plugs.
16. Install the four ignition coils (see page 4-20).
17. Select PCM reset (see page 11-4) in the PGM-FI, INSPECTION menu ALL INJECTORS STOP with the HDS.

VTEC Rocker Arm Test

Special Tools Required
- VTEC air stopper 07ZAJ-PNAA200
- VTEC air adapter 07ZAJ-PNAA101
- Air joint adapter 07ZAJ-PNAA300
- Air pressure regulator 07AAJ-PNAA101

1. Start the engine, and let it run for 5 minutes, then turn the ignition switch to LOCK (0).

2. Remove the cylinder head cover (see page 6-73).

3. Set the No. 1 piston at top dead center (TDC) (see step 5 on page 6-62).

4. Intake side: Move the secondary rocker arm (A) for the No. 1 cylinder. The secondary rocker arm should move independently of the mid rocker arm (B).

   - If the secondary rocker arm moves freely, go to step 5.
   - If the secondary rocker arm does not move independently, remove the mid, primary, and secondary rocker arms as an assembly, and check that the pistons in the rocker arms move smoothly. If any rocker arm needs replacing, replace the mid, primary, and secondary rocker arms as an assembly, then retest.

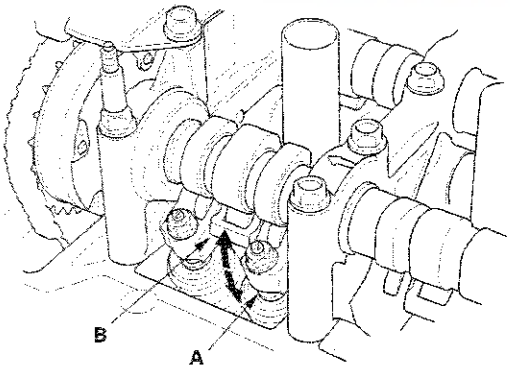

5. Exhaust side: Move the secondary rocker arm (A) for the No. 1 cylinder. The secondary rocker arm should move independently of the primary rocker arm (B).

   - If the secondary rocker arm moves freely, go to step 6.
   - If the secondary rocker arm does not move independently, remove the primary and the secondary rocker arms as an assembly, and check that the pistons in the rocker arms move smoothly. If any rocker arm needs replacing, replace the primary and the secondary rocker arms as an assembly, then retest.

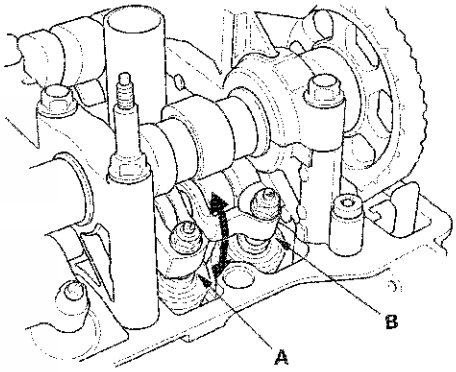

6. Repeat step 4 through 5 on the remaining secondary rocker arms with each piston at TDC. When all the secondary rocker arms pass the test, go to step 7.

7. Check that the air pressure on the shop air compressor gauge indicates over 400 kPa (4.0 kgf/cm^2, 57 psi).

8. Inspect the valve clearance (see page 6-58).

(cont'd)

VTEC Rocker Arm Test (cont'd)

9. Remove the sealing bolt (A) from the relief hole, and install the VTEC air stopper (B).

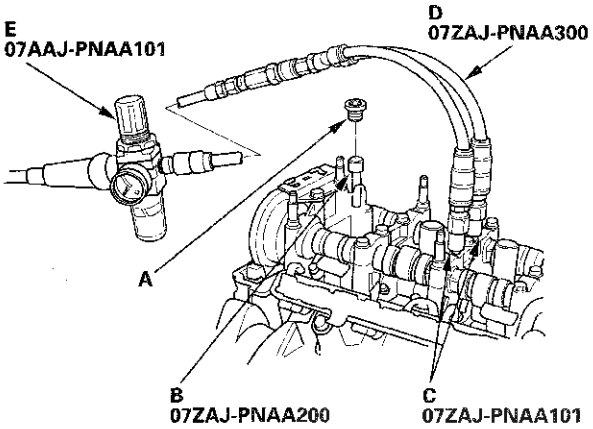

10. Remove the No. 3 camshaft holder bolts, and install the VTEC air adapters (C) finger-tight.

11. Connect the air joint adapter (D) and the air pressure regulator (E).

12. Loosen the valve on the air pressure regulator, and apply the specified air pressure.

    Specified Air Pressure:
    290 kPa (3.0 kgf/cm^2, 42 psi)

    NOTE: If the rocker arm piston does not move after applying air pressure; move the rocker arm up and down manually by rotating the crankshaft clockwise.

13. Intake side: With the specified air pressure applied, move the secondary rocker arm (A) for the No. 1 cylinder. The mid rocker arm (B), the primary rocker arm (C), and the secondary rocker arm should move together.

    - If the mid, the primary, and the secondary rocker arms move together, go to step 14.
    - If the mid and primary rocker arms do not move together with the secondary rocker arm, remove the mid, primary, and secondary rocker arms as an assembly, and check that the pistons in the rocker arms move smoothly. If any rocker arm needs replacing, replace the mid, primary, and secondary rocker arms as an assembly, then retest.

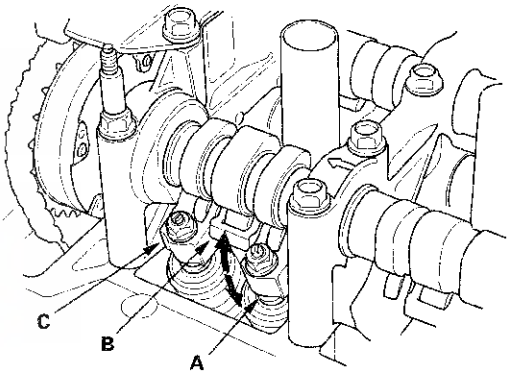

14. Exhaust side: With the specified air pressure applied, move the secondary rocker arm (A) for the No. 1 cylinder. The primary rocker arm (B) and the secondary rocker arm should move together.

    - If the primary and the secondary rocker arms move together, go to step 15.
    - If the primary rocker arms do not move together with the secondary rocker arm, remove the primary and the secondary rocker arms as an assembly, and check that the pistons in the rocker arms move smoothly. If any rocker arm needs replacing, replace the primary and the secondary rocker arms as an assembly, then retest.

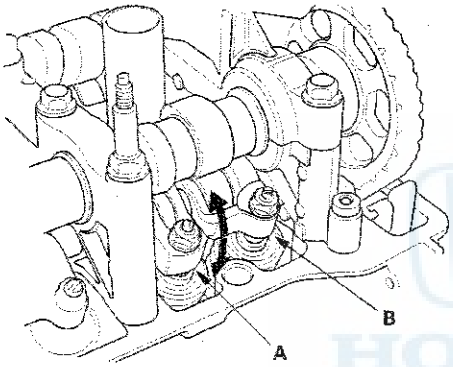

15. Repeat step 13 through 14 on the remaining secondary rocker arms with each piston at TDC. When all the secondary rocker arms pass the test, go to step 16.

16. Remove the air pressure regulator, the air joint adapter, the VTEC air adapter, and the VTEC air stopper.

17. Tighten the camshaft holder mounting bolts to 22 N·m (2.2 kgf·m, 16 lbf·ft).

18. Tighten the sealing bolt to 10 N·m (1.0 kgf·m, 7.4 lbf·ft).

19. Install the cylinder head cover (see page 6-74).

VTC Actuator Inspection

1. Remove the cam chain (see page 6-62).

2. Loosen the rocker arm adjusting screws (see step 2 on page 6-81).

3. Remove the camshaft holder (see step 3 on page 6-81).

4. Remove the intake camshaft.

5. Check that the variable valve timing control (VTC) actuator is locked by turning the VTC actuator counterclockwise. If it is not locked, turn the VTC actuator clockwise until it stops, then recheck it. If it is still not locked, replace the VTC actuator.

6. Seal the retard holes (A) in the No. 1 camshaft journal with tape and a wire tie.

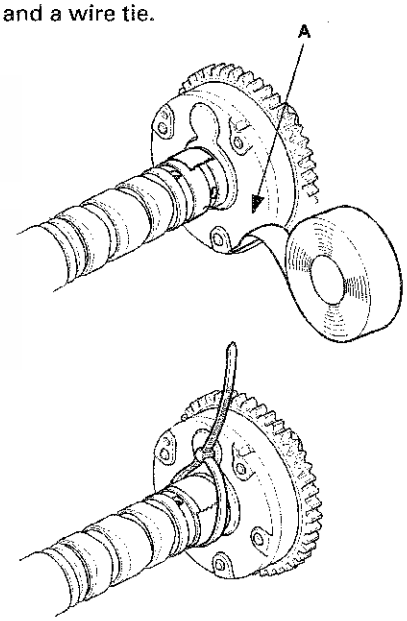

7. Seal over one of the advance holes (A) with tape.

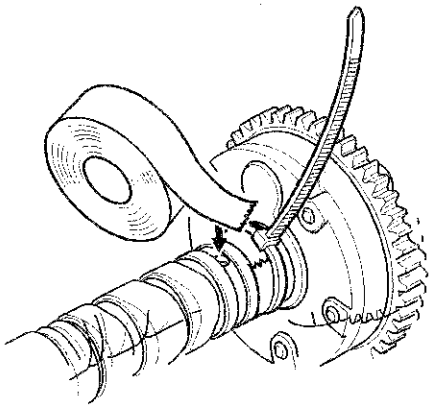

(cont'd)

VTC Actuator Inspection (cont'd)

8. Apply air to the unsealed advance hole to release lock.

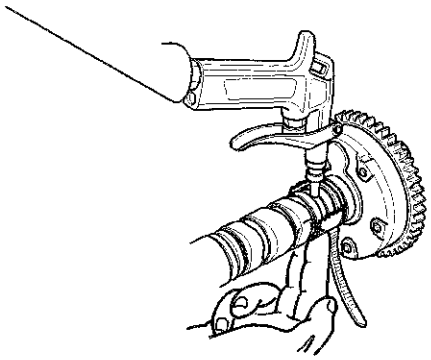

9. Check that the VTC actuator moves smoothly. If the VTC actuator does not move smoothly, replace the VTC actuator.

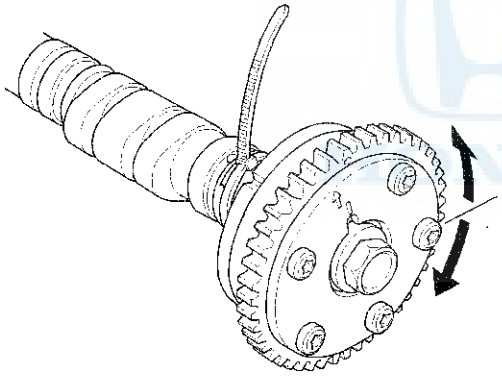

10. Remove the wire tie, the tape, and the adhesive residue from the No. 1 camshaft journal.

11. Make sure the punch marks on the VTC actuator and the exhaust camshaft sprocket are facing up, then set the camshafts in the head (see step 6 on page 6-93).

12. Set the camshaft holders and cam chain guide B in place (see step 7 on page 6-93).

13. Tighten the camshaft holder bolts to the specified torque (see step 8 on page 6-93).

14. Hold the camshaft, and turn the VTC actuator clockwise until you hear it click. Make sure to lock the VTC actuator by turning it.

15. Install the cam chain (see page 6-64).

16. Adjust the valve clearance (see page 6-58).

Valve Clearance Adjustment

Special Tools Required
- Locknut wrench 07MAA-PR70120
- Adjuster 07MAA-PR70110

NOTE: Connect the Honda Diagnostic System (HDS) to the data link connector (DLC) and monitor the engine coolant temperature (ECT) sensor 1 with the HDS. Adjust the valve clearance only when the ECT sensor 1 temperature is less than 100 °F (38 °C).

1. Remove the cylinder head cover (see page 6-73).

2. Set the No. 1 piston at top dead center (TDC). The punch mark (A) on the variable valve timing control (VTC) actuator and the punch mark (B) on the exhaust camshaft sprocket should be at the top. Align the TDC marks (C) on the VTC actuator and the exhaust camshaft sprocket.

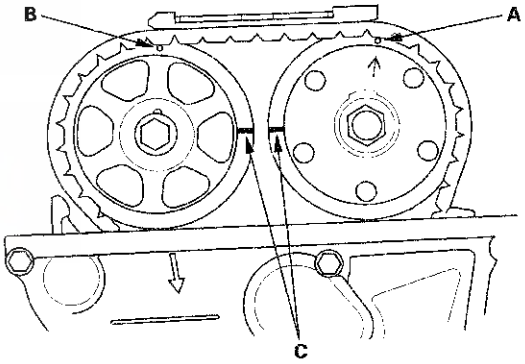

3. Select the correct feeler gauge for the valve clearance you are going to check.

Valve Clearance
Intake: 0.21—0.25 mm (0.008—0.010 in.)
Exhaust: 0.25—0.29 mm (0.010—0.011 in.)

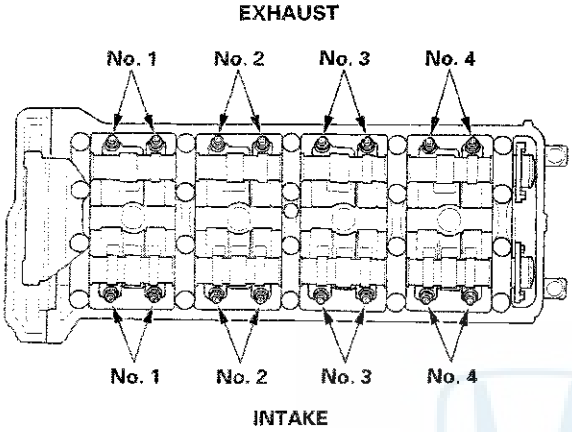

4. Insert the feeler gauge (A) between the adjusting screw (B) and the end of the valve stem, and slide it back and forth; you should feel a slight amount of drag.

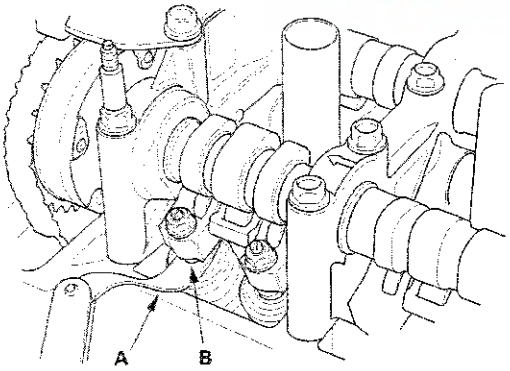

5. If you feel too much or too little drag, loosen the locknut with the locknut wrench and adjuster, and turn the adjusting screw until the drag on the feeler gauge is correct.

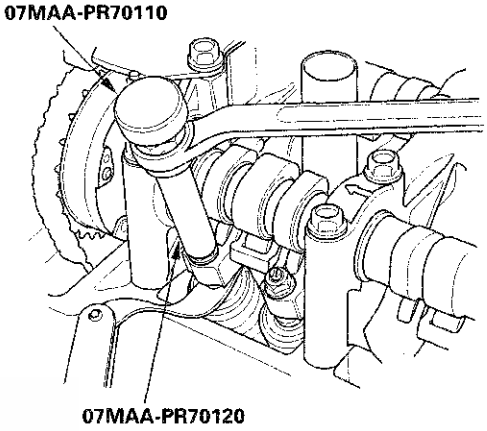

6. Tighten the locknut to the specified torque, and recheck the clearance. Repeat the adjustment if necessary.

Specified Torque
Intake:
7 x 0.75 mm
14 N·m (1.4 kgf·m, 10 lbf·ft)
Apply new engine oil to the nut threads.
Exhaust:
7 x 0.75 mm
14 N·m (1.4 kgf·m, 10 lbf·ft)
Apply new engine oil to the nut threads.

(cont'd)

Valve Clearance Adjustment (cont'd)

7. Rotate the crankshaft 180 ° clockwise (camshaft pulley turns 90 °).

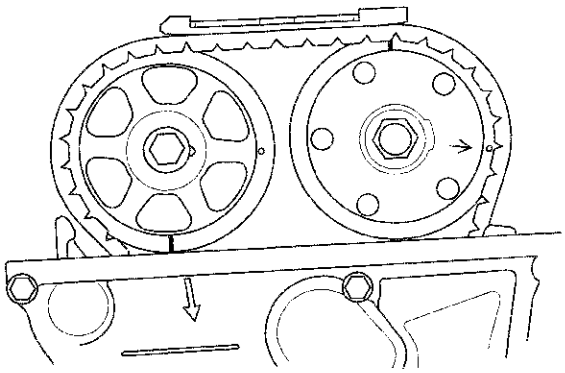

8. Check and, if necessary, adjust the valve clearance on the No. 3 cylinder.

9. Rotate the crankshaft 180 ° clockwise (camshaft pulley turns 90 °).

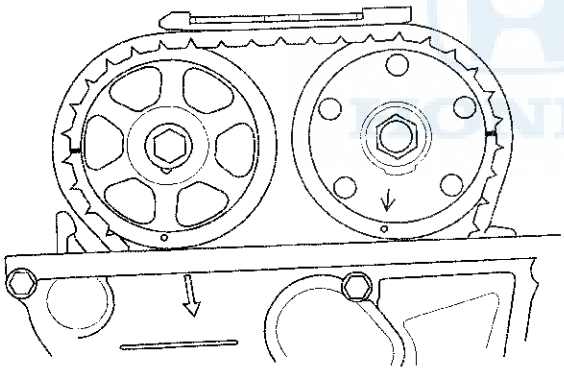

10. Check and, if necessary, adjust the valve clearance on the No. 4 cylinder.

11. Rotate the crankshaft 180 ° clockwise (camshaft pulley turns 90 °).

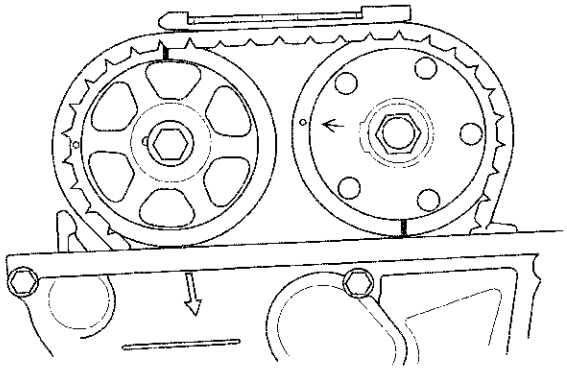

12. Check and, if necessary, adjust the valve clearance on the No. 2 cylinder.

13. Install the cylinder head cover (see page 6-74).

Crankshaft Pulley Removal and Installation

Special Tools Required
- Holder handle 07JAB-001020B
- Crankshaft pulley holder 07AAB-RJAA100
- Socket, 19 mm 07JAA-001020A or a commercially available 19 mm socket

Removal

1. Remove the front wheels.
2. Remove the splash shield (see step 24 on page 5-5).
3. Remove the drive belt (see page 4-30).
4. Hold the pulley with the holder handle (A) and the crankshaft pulley holder (B).

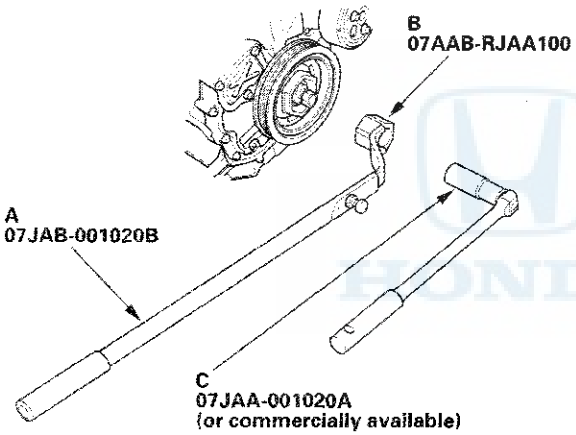

5. Remove the bolt with a socket, 19 mm (C) and a breaker bar, then remove the crankshaft pulley.

Installation

1. Clean the crankshaft pulley (A), the crankshaft (B), the bolt (C), and the washer (D). Lubricate with new engine oil as shown.

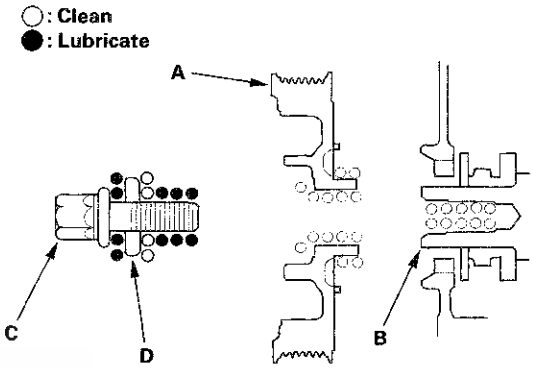

2. Install the crankshaft pulley, and hold the pulley with the holder handle (A) and the crankshaft pulley holder (B).

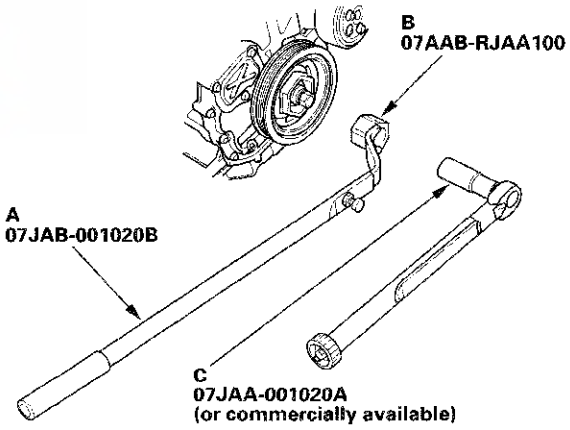

3. Tighten the bolt to 49 N·m (5.0 kgf·m, 36 lbf·ft) with a torque wrench and socket, 19 mm (C). Do not use an impact wrench. If the pulley bolt or crankshaft are new, tighten the bolt to 177 N·m (18.0 kgf·m, 130 lbf·ft), then remove the bolt and tighten it to 49 N·m (5.0 kgf·m, 36 lbf·ft).
4. Tighten the pulley bolt an additional 90 °.
5. Install the drive belt (see page 4-30).
6. Install the splash shield (see step 48 on page 5-20).
7. Install the front wheels.

Cam Chain Removal

NOTE: Keep the cam chain away from magnetic fields.

1. Remove the front wheels.
2. Remove the splash shield (see step 25 on page 5-5).
3. Remove the drive belt (see page 4-30).
4. Remove the cylinder head cover (see page 6-73).
5. Set the No. 1 piston at top dead center (TDC). The punch mark (A) on the variable valve timing control (VTC) actuator and the punch mark (B) on the exhaust camshaft sprocket should be at the top. Align the TDC marks (C) on the VTC actuator and the exhaust camshaft sprocket.

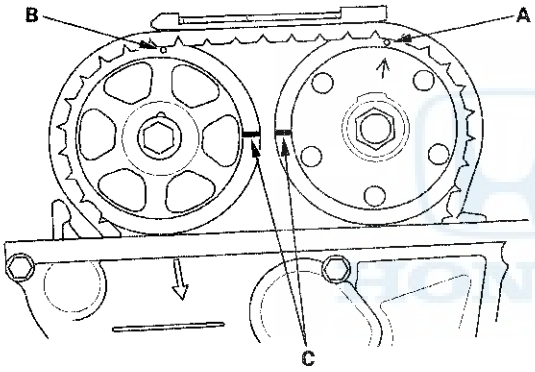

6. Disconnect the VTC oil control solenoid valve connector (A) and remove the harness clamp (B).

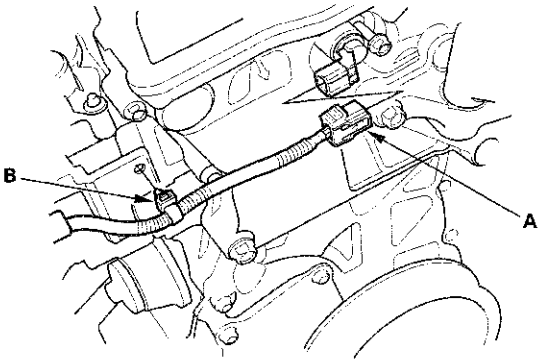

7. Remove the VTC oil control solenoid valve (see page 11-300).
8. Remove the crankshaft pulley (see page 6-61).
9. Support the engine with a jack and a wood block under the oil pan.
10. Remove the ground cable (A), then remove the side engine mount bracket (B).

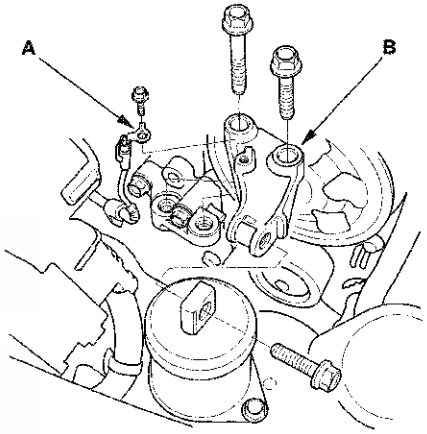

11. Remove the side engine mount bracket mounting bolts.

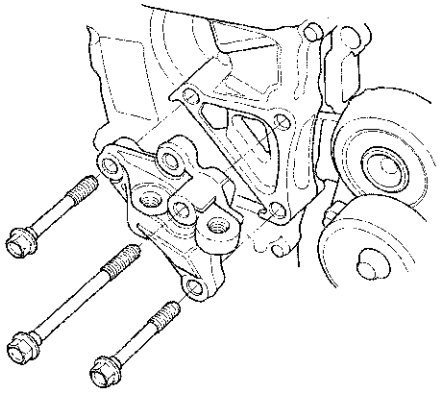

12. Remove the cam chain case (A) and spacer (B).

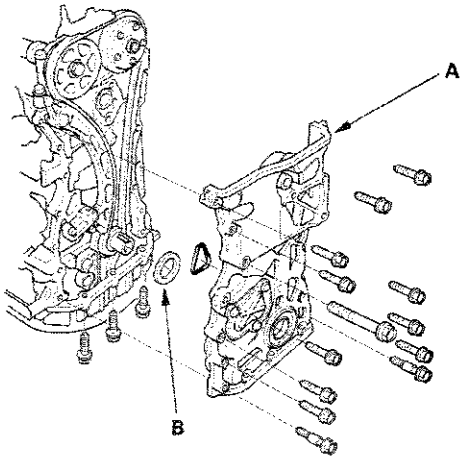

13. Loosely install the crankshaft pulley.

14. Turn the crankshaft counterclockwise to compress the auto-tensioner.

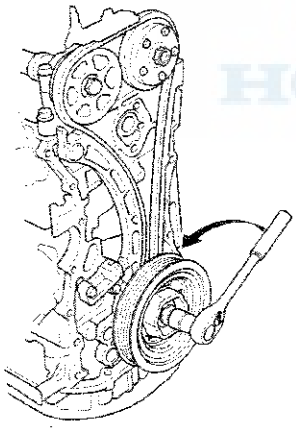

15. Align the holes on the lock (A) and the auto-tensioner (B), then insert a 1.2 mm (0.05 in.) diameter pin or lock pin (P/N 14511-PNA-003) (C) into the holes. Turn the crankshaft clockwise to secure the pin.

NOTE: Check the auto-tensioner cam position. If the position are not aligned, set the first cam to the first edge of the rack.

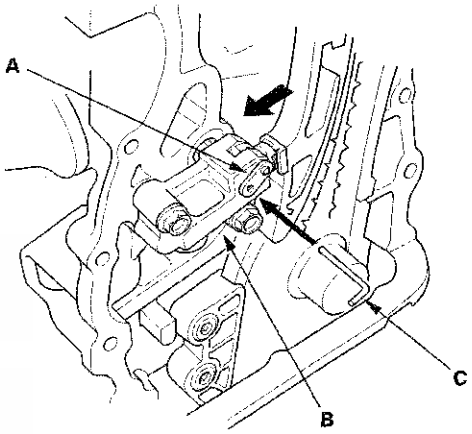

16. Remove the auto-tensioner.

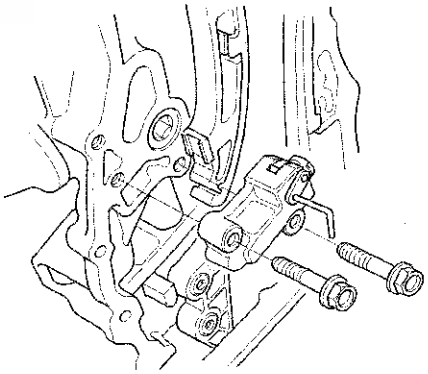

(cont'd)

Cam Chain Removal (cont'd)

17. Remove cam chain guide B.

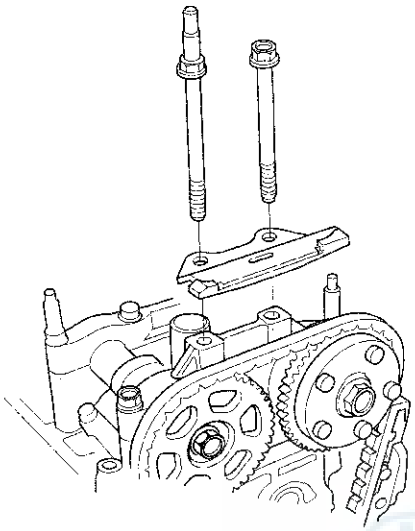

18. Remove cam chain guide A and the tensioner arm (B).

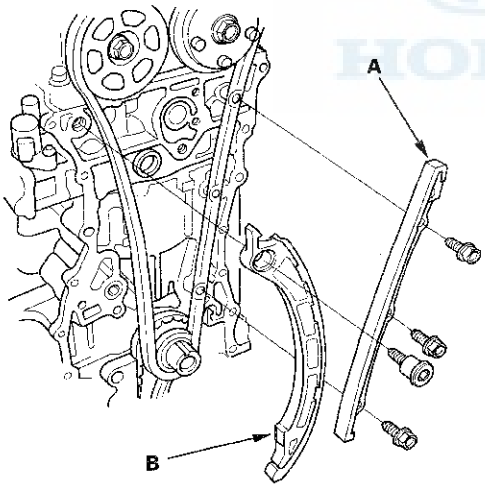

19. Remove the cam chain.

Cam Chain Installation

Special Tools Required
Camshaft lock pin set 07AAB-RWCA120

NOTE:
- Keep the cam chain away from magnetic fields.
- Before doing this procedure, check that the variable valve timing control (VTC) actuator is locked by turning the VTC actuator counterclockwise. If not locked, turn the VTC actuator clockwise until it stops, then recheck it. If it is still not locked, replace the VTC actuator.

1. Set the crankshaft to top dead center (TDC). Align the TDC mark (A) on the crankshaft sprocket with the pointer (B) on the engine block.

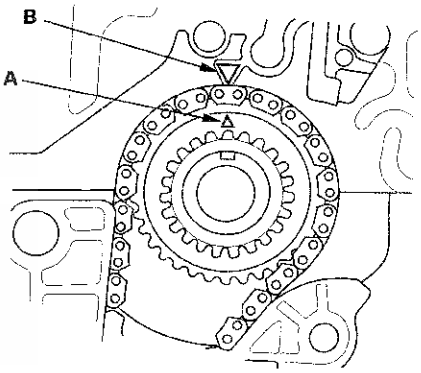

2. Set the camshafts to TDC. The punch mark (A) on the VTC actuator and the punch mark (B) on the exhaust camshaft sprocket should be at the top. Align the TDC marks (C) on the VTC actuator and the exhaust camshaft sprocket.

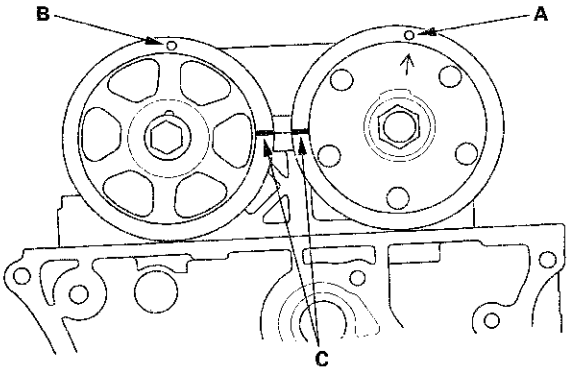

3. To hold the intake camshaft, insert a camshaft lock pin (P/N 07AAB-RWCA120) (A) into the maintenance hole in camshaft position (CMP) pulse plate A (B) and through the No. 5 rocker shaft holder (C).

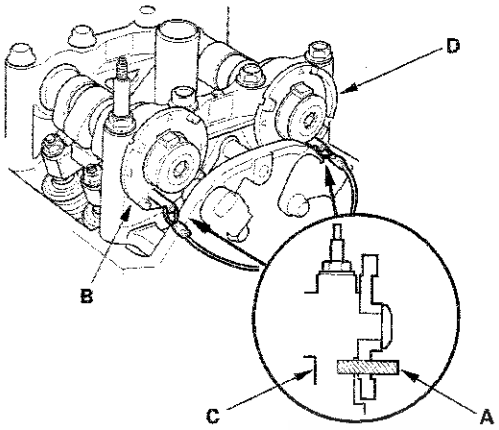

4. To hold the exhaust camshaft, insert a camshaft lock pin (A) into the maintenance hole in CMP pulse plate B (D) and through the No. 5 rocker shaft holder (C).

5. Install the cam chain on the crankshaft sprocket with the colored link plate (A) aligned with the mark (B) on the crankshaft sprocket.

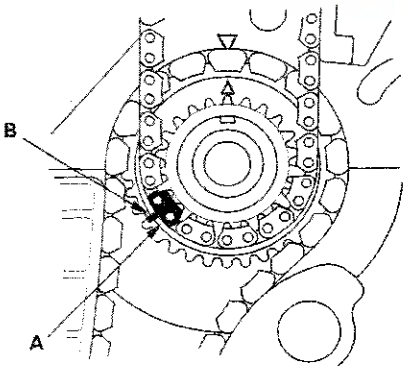

6. Install the cam chain on the VTC actuator and the exhaust camshaft sprocket with the punch marks (A) aligned with the center of the two colored link plates (B).

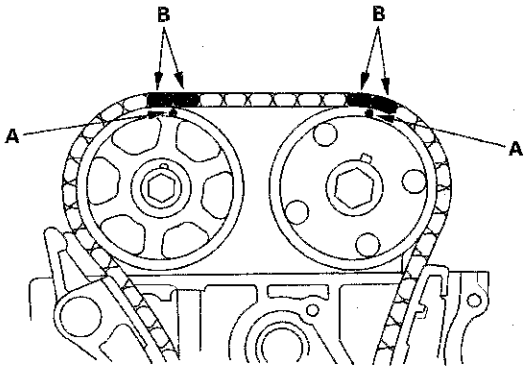

7. Install cam chain guide A and the tensioner arm (B).

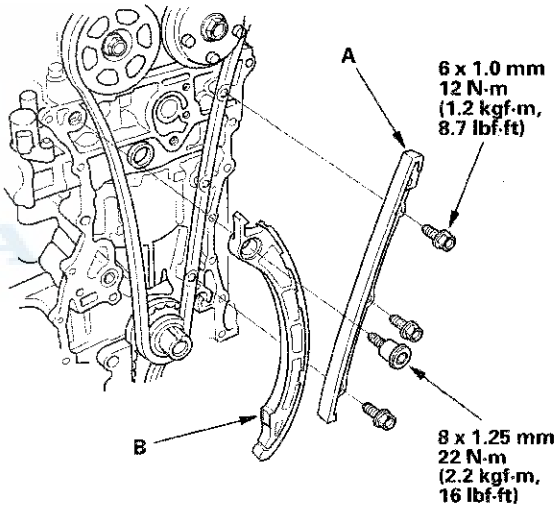

(cont'd)

Cam Chain Installation (cont'd)

8. Compress the auto-tensioner when replacing the cam chain. Remove the pin from the auto-tensioner. Turn the plate (A) counterclockwise, to release the lock, then press the rod (B), and set the first cam (C) to the first edge of the rack (D). Insert the 1.2 mm (0.05 in.) diameter pin or lock pin (P/N 14511-PNA-003) (E) into the holes (F).

   NOTE: If the chain tensioner is not set up as described, the tensioner will become damaged.

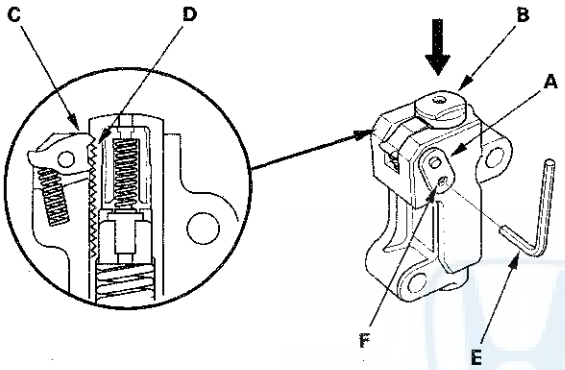

9. Install cam chain guide B.

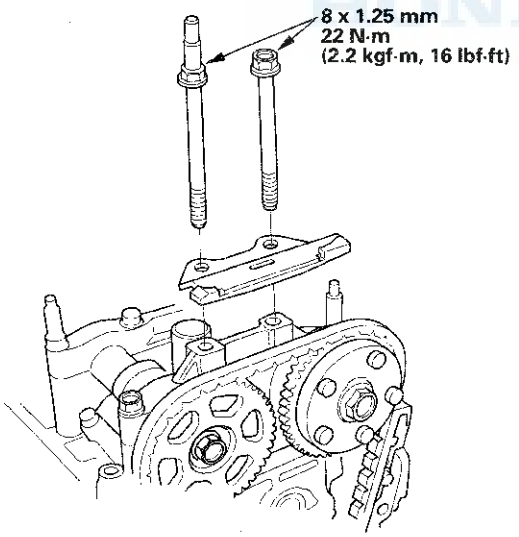

10. Install the auto-tensioner.

    NOTE: Check the auto-tensioner cam position. If the position are not aligned, set the first cam to the first edge of the rack.

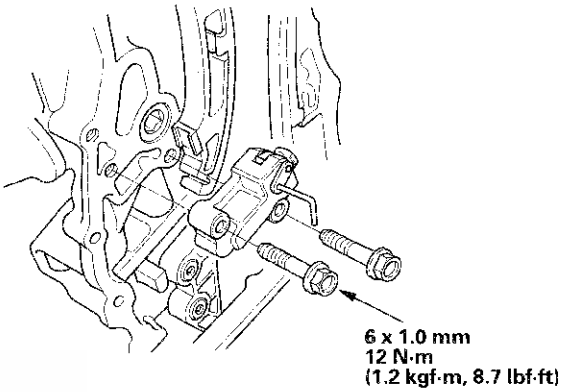

11. Remove the pin or lock pin from the auto-tensioner.

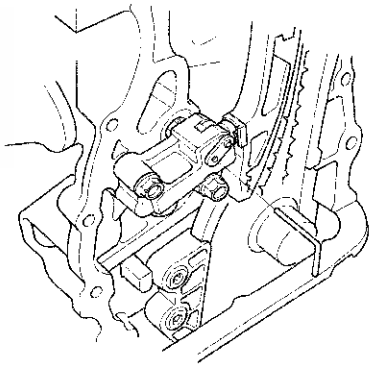

12. Remove the camshaft lock pin set.

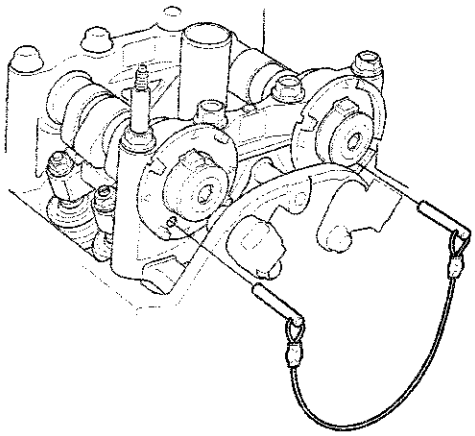

13. Check the chain case oil seal for damage. If the oil seal is damaged, replace the chain case oil seal (see page 6-71).

14. Remove the old liquid gasket from the chain case mating surfaces, the bolts, and the bolt holes.

15. Clean and dry the chain case mating surfaces.

16. Apply liquid gasket, P/N 08717-0004, 08718-0001, 08718-0003, or 08718-0009, evenly to the engine block mating surface of the chain case, and to the inside edge of the threaded bolt holes. Install the component within 5 minutes of applying the liquid gasket.

NOTE:
- If you apply liquid gasket P/N 08718-0012, the component must be installed within 4 minutes.
- If too much time has passed after applying the liquid gasket, remove the old liquid gasket and residue, then reapply new liquid gasket.

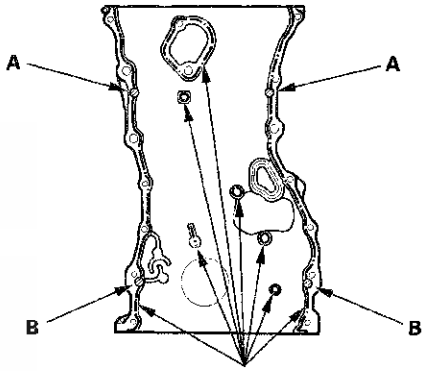

Apply liquid gasket along the broken line.

17. Apply liquid gasket to the engine block upper surface contact areas (A) on the chain case and lower block upper surface contact areas (B) on the chain case.

18. Apply liquid gasket, P/N 08717-0004, 08718-0001, 08718-0003, or 08718-0009, evenly to the oil pan mating surface of the chain case, and to the inside edge of the threaded bolt holes. Install the component within 5 minutes of applying the liquid gasket.

NOTE:
- If you apply liquid gasket P/N 08718-0012, the component must be installed within 4 minutes.
- If too much time has passed after applying the liquid gasket, remove the old liquid gasket and residue, then reapply new liquid gasket.

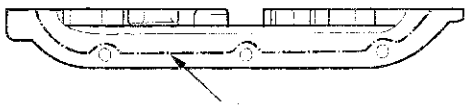

Apply liquid gasket along the broken line.

(cont'd)

Cam Chain Installation (cont'd)

19. Install the spacer (A), then install the new O-ring (B) on the chain case. Set the edge of the chain case (C) to the edge of the oil pan (D), then install the chain case on the engine block (E). Wipe off the excess liquid gasket on the oil pan and chain case mating surface.

    NOTE:
    - When installing the chain case, do not slide the bottom surface onto the oil pan mounting surface.
    - Wait at least 30 minutes before filling the engine with oil.
    - Do not run the engine for at least 3 hours after installing the chain case.

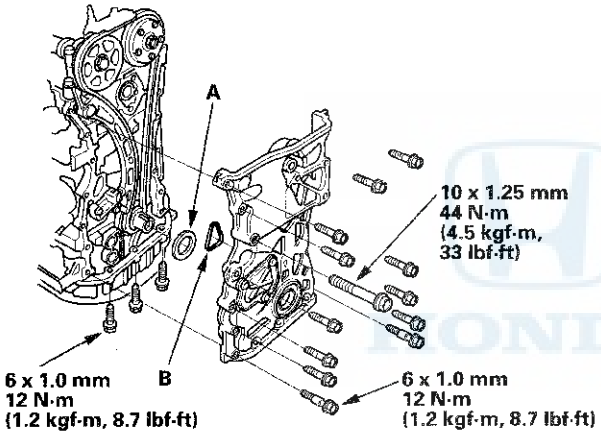

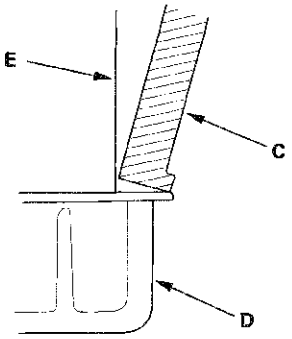

20. Install the side engine mount bracket, then tighten the side engine mount bracket mounting bolts.

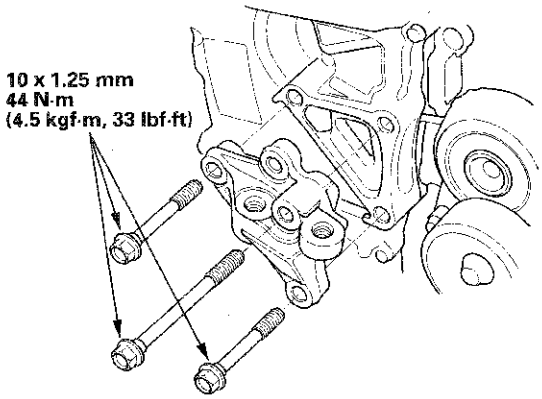

21. Tighten the new side engine mount bracket mounting bolts in the numbered sequence shown.

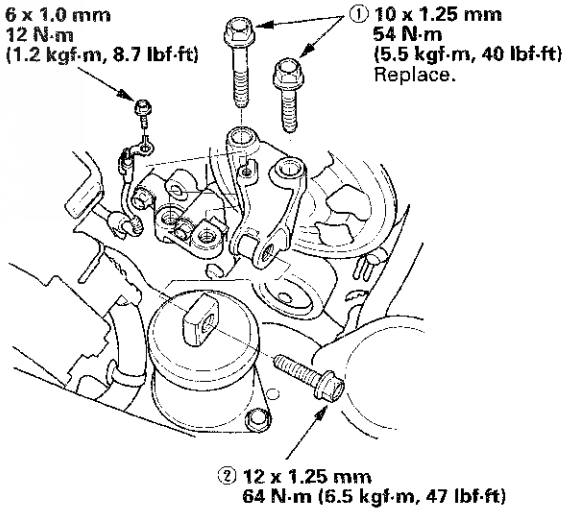

22. Install the ground cable.

23. Remove the jack and the wood block.

24. Install the crankshaft pulley (see page 6-61).

25. Install the VTC oil control solenoid valve (see page 11-300).

26. Connect the VTC oil control solenoid valve connector (A) and install the harness clamp (B).

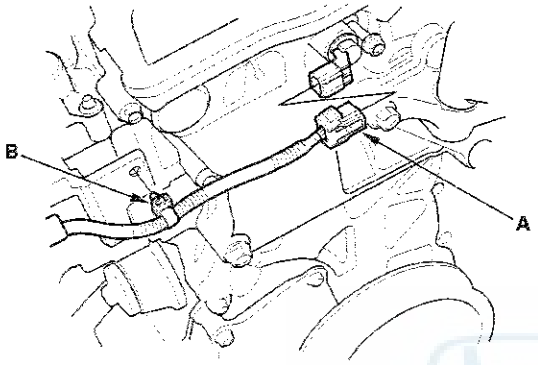

27. Install the cylinder head cover (see page 6-74).

28. Install the drive belt (see page 4-30).

29. Install the splash shield (see step 48 on page 5-20).

30. Install the front wheels.

31. Do the crankshaft position (CKP) pattern clear/CKP pattern learn procedure (see page 11-5).

Auto-tensioner Removal and Installation

Removal

1. Remove the chain case cover.

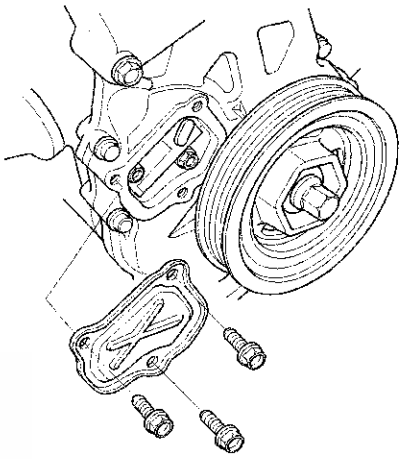

2. Turn the crankshaft counterclockwise to compress the auto-tensioner.

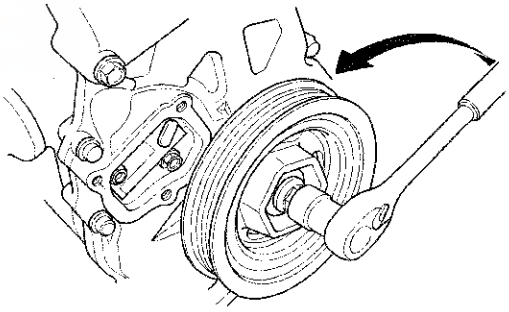

(cont'd)

Auto-tensioner Removal and Installation (cont'd)

3. Align the holes on the lock (A) and the auto-tensioner (B), then insert a 1.2 mm (0.05 in.) diameter pin or lock pin (P/N 14511-PNA-003) (C) into the holes. Turn the crankshaft clockwise to secure the pin.

   NOTE: Check the auto-tensioner cam position. If the position are not aligned, set the first cam to the first edge of the rack (see step 8 on page 6-66).

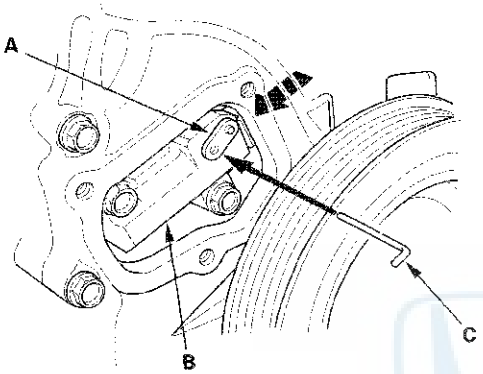

4. Remove the auto-tensioner.

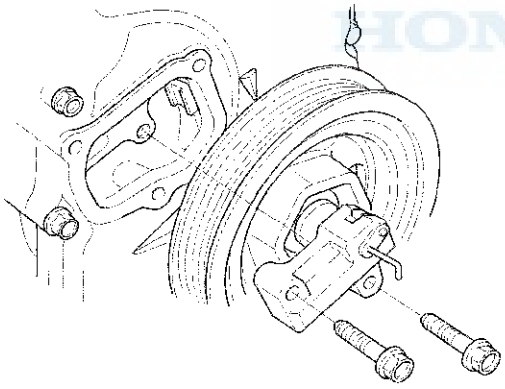

Installation

1. Install the auto-tensioner.

   NOTE: Check the auto-tensioner cam position. If the position are not aligned, set the first cam to the first edge of the rack.

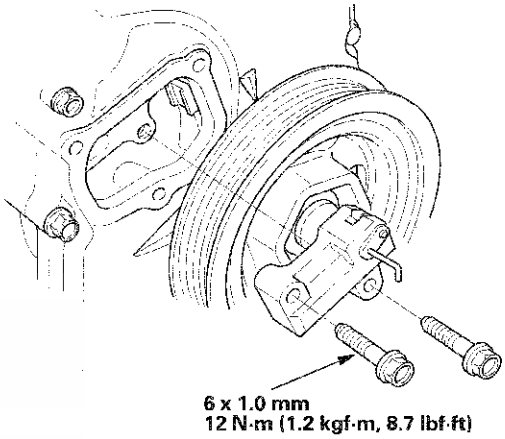

2. Remove the 1.2 mm (0.05 in.) diameter pin or lock pin (P/N 14511-PNA-003) from the auto-tensioner.

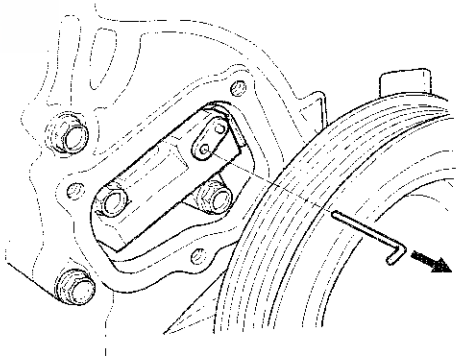

3. Remove the old liquid gasket from the chain case cover mating surfaces, the bolts, and the bolt holes.

4. Clean and dry the chain case cover mating surfaces.

5. Apply liquid gasket, P/N 08717-0004, 08718-0001, 08718-0003, or 08718-0009, evenly to the chain case mating surface of the chain case cover, and to the inside edge of the threaded bolt holes. Install the component within 5 minutes of applying the liquid gasket.

   NOTE:
   - If you apply liquid gasket P/N 08718-0012, the component must be installed within 4 minutes.
   - If too much time has passed after applying the liquid gasket, remove the old liquid gasket and residue, then reapply new liquid gasket.

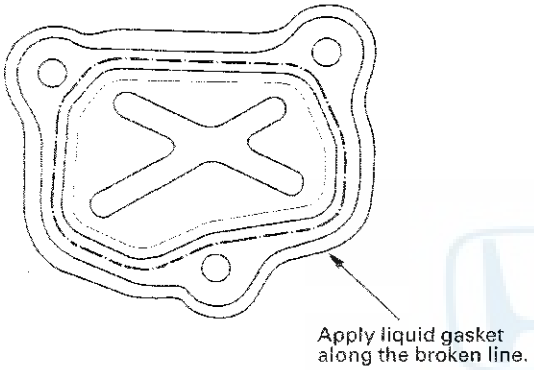

6. Install the chain case cover.

   NOTE:
   - Wait at least 30 minutes before filling the engine with oil.
   - Do not run the engine for at least 3 hours after installing the chain case cover.

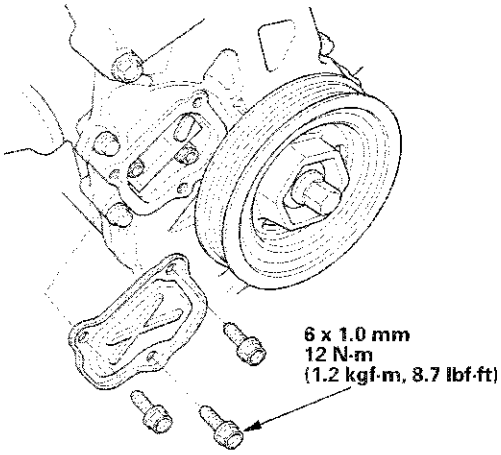

Chain Case Oil Seal Installation

Special Tools Required
- Driver 07749-0010000
- Attachment, 52 x 55 mm 07746-0010400

1. Apply a light coat of new engine oil around the crankshaft.

2. Apply a light coat of new engine oil to the lip of the chain case oil seal.

3. Use the driver and attachment, 52 x 55 mm to drive a new oil seal squarely into the chain case to the specified installed height.

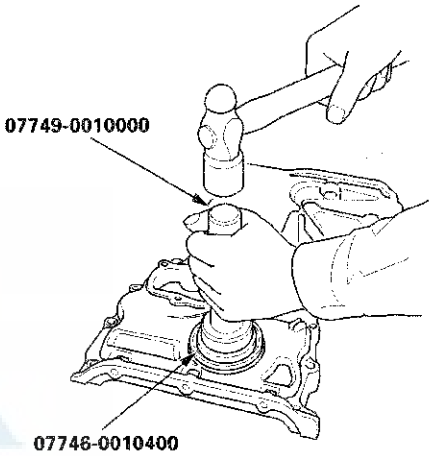

4. Measure the distance between the chain case surface and the oil seal.

   Oil Seal Installed Height:
   32.4—33.1 mm (1.28—1.30 in.)

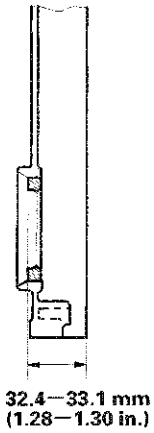

Cam Chain Inspection

Special Tools Required
Cam chain inspection gauge 07AAJ-RWCA100

1. Remove the front wheels.
2. Remove the splash shield (see step 25 on page 5-5).
3. Remove the cylinder head cover (see page 6-73).
4. Rotate the crankshaft pulley two turns clockwise.
5. Set the No. 1 piston at top dead center (TDC). The punch mark (A) on the variable valve timing control (VTC) actuator and the punch mark (B) on the exhaust camshaft sprocket should be at the top. Align the TDC marks (C) on the VTC actuator and the exhaust camshaft sprocket.

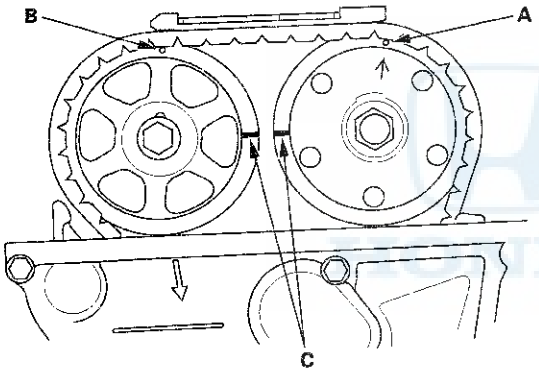

6. Measure the clearance between the cam chain (A) and the tensioner arm (B) with the cam chain inspection gauge (07AAJ-RWCA100).
   - If the clearance is OK, go to step 17.
   - If the clearance is more than the service limit, go to step 7.

   Chain-to-Arm Clearance
   Service Limit:
   MIL on with P0341: 4.3 mm (0.17 in.)
   Without MIL: 5.5 mm (0.22 in.)

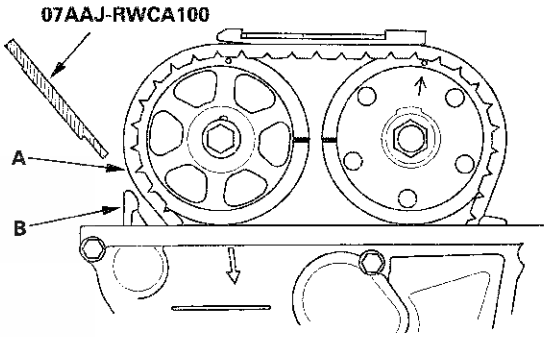

7. Remove the oil pan (see page 7-11).
8. Support the engine with a jack and a wood block under the engine block.

   NOTE: Do not hit the oil pump and the baffle plate when placing the jack on the edge of the engine block.

9. Remove the cam chain (see page 6-62), and check the teeth on the crankshaft sprocket, the VTC actuator, and the exhaust camshaft sprocket for wear and damage. If any of them are worn or damaged, replace if necessary.
10. Check the oil passage on the auto-tensioner for clogs. If the auto-tensioner is clogged, replace it.

11. Measure the oil pump chain auto-tensioner rod length.

Oil Pump Chain Auto-Tensioner Rod Length
Service Limit: 13 mm (0.51 in.)

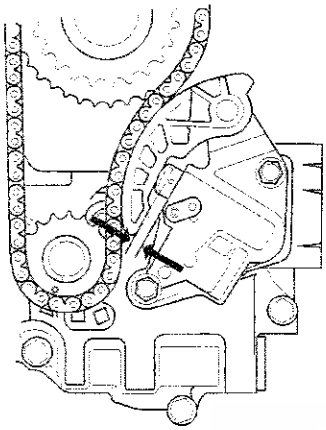

12. If the length is over the service limit, replace the oil pump chain (see page 8-23). When replacing, check the teeth on the crankshaft sprocket and the oil pump sprocket for wear and damage. If any of them are worn or damaged, replace if necessary.

13. Check the oil passage on the oil pump chain auto-tensioner for clogs. If the auto-tensioner is clogged, replace it.

14. Install the new cam chain (see page 6-64).

15. Remove the jack and the wood block.

16. Install the oil pan (see page 7-31).

17. Install the cylinder head cover (see page 6-74).

18. Install the splash shield (see step 48 on page 5-20).

19. Install the front wheels.

Cylinder Head Cover Removal

1. Remove the strut brace (if equipped) (see page 20-289).

2. Remove the intake manifold cover.

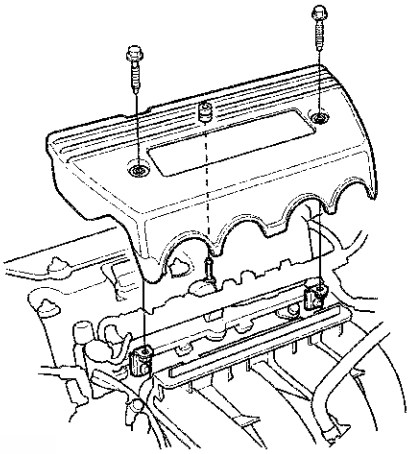

3. Remove the four ignition coils (see page 4-20).

4. Remove the dipstick (A), and the power steering (P/S) hose bracket (B) and disconnect the breather hose (C) and the brake booster vacuum hose (D).

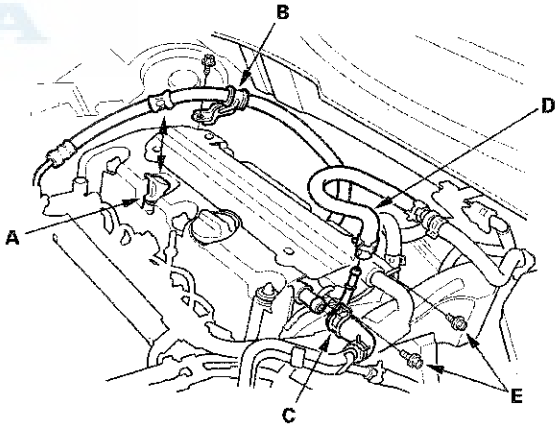

5. Remove the two bolts (E) securing the evaporative emission (EVAP) canister purge valve bracket.

(cont'd)

Cylinder Head Cover Removal (cont'd)

6. Remove the cylinder head cover.

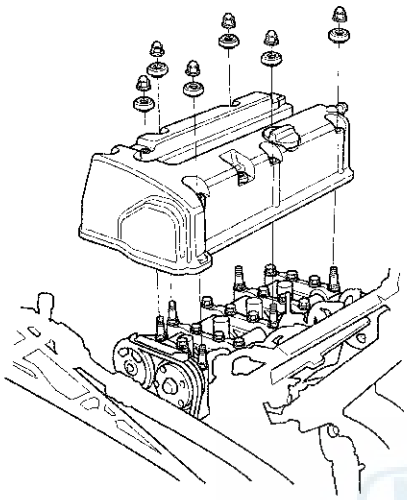

Cylinder Head Cover Installation

1. Thoroughly clean the head cover gasket and the groove.

2. Install the head cover gasket (A) in the groove of the cylinder head cover (B).

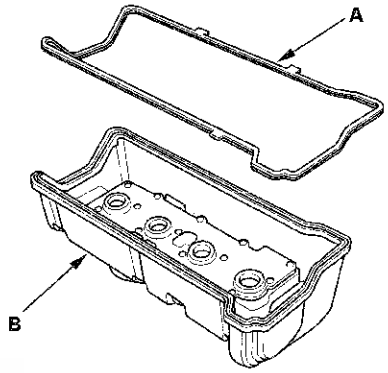

3. Check that the mating surfaces are clean and dry.

4. Apply liquid gasket, P/N 08717-0004, 08718-0001, 08718-0003, or 08718-0009, on the chain case and the No. 5 rocker shaft holder mating areas, and to the inside edge of the threaded bolt holes. Install the component within 5 minutes of applying the liquid gasket.

   NOTE:
   - If you apply liquid gasket P/N 08718-0012, the component must be installed within 4 minutes.
   - If too much time has passed after applying the liquid gasket, remove the old liquid gasket and residue, then reapply new liquid gasket.

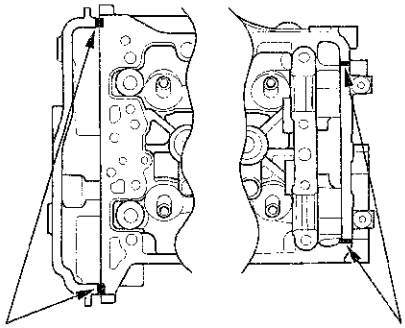

Apply liquid gasket to these points.

Apply liquid gasket to these points.

5. Set the spark plug seals (A) on the spark plug tubes. Place the cylinder head cover (B) on the cylinder head, then slide the cover slightly back and forth to seat the head cover gasket.

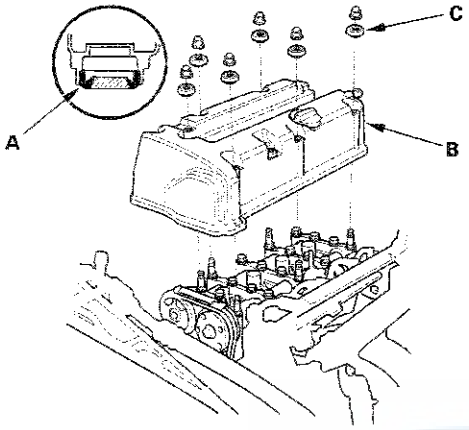

6. Inspect the cover washers (C). Replace any washer that is damaged or deteriorated.

7. Tighten the bolts in three steps. In the final step tighten all bolts, in sequence, to 12 N·m (1.2 kgf·m, 8.7 lbf·ft).

   NOTE:
   - Wait at least 30 minutes before filling the engine with oil.
   - Do not run the engine for at least 3 hours after installing the head cover.

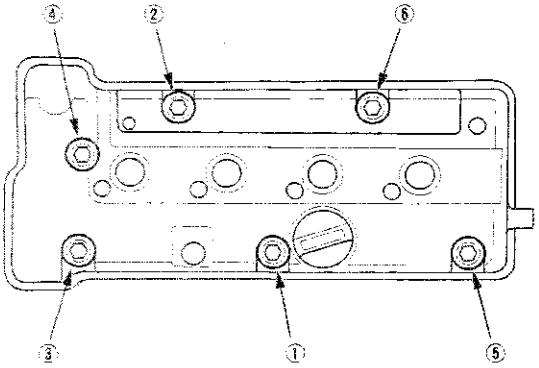

8. Install the two bolts (A) securing the evaporative emission (EVAP) canister purge valve bracket.

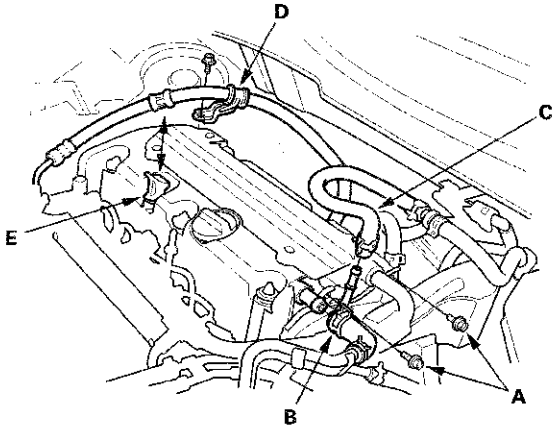

9. Connect the breather hose (B) and the brake booster vacuum hose (C) and install the power steering (P/S) hose bracket (D), and the dipstick (E).

10. Install the four ignition coils (see page 4-20).

11. Install the intake manifold cover.

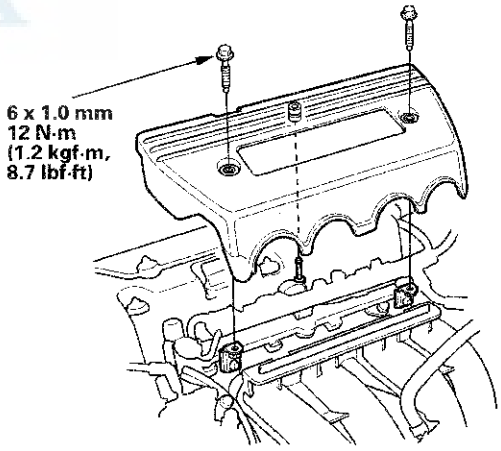

12. Install the strut brace (if equipped) (see page 20-289).

Cylinder Head Removal

NOTE:
- Use fender covers to avoid damaging painted surfaces.
- To avoid damage, unplug the wiring connectors carefully while holding the connector portion.
- Connect the Honda Diagnostic System (HDS) to the data link connector (DLC), and monitor the engine coolant temperature (ECT) sensor 1. To avoid damaging the cylinder head, wait until the ECT sensor 1 temperature drops below 100 °F (38 °C) before loosening the cylinder head bolts.
- Mark all wiring and hoses to avoid misconnection. Also, be sure that they do not contact other wiring or hoses, or interfere with other parts.

1. Remove the strut brace (if equipped) (see page 20-289).
2. Relieve the fuel pressure (see page 11-332).
3. Drain the engine coolant (see page 10-6).
4. Remove the drive belt (see page 4-30).
5. Remove the intake manifold (see page 9-3).
6. Remove the catalytic converter (see page 11-367).
7. Disconnect the evaporative emission (EVAP) canister hose (A).

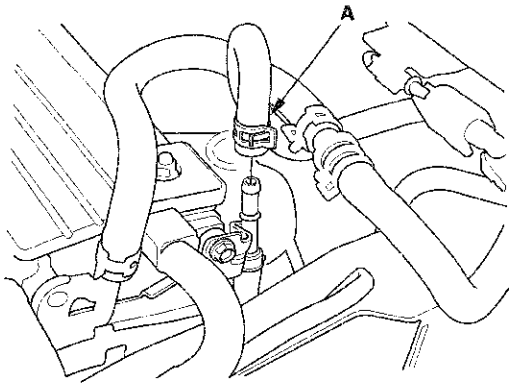

8. Remove the quick-connect fitting cover (A), then disconnect the fuel feed hose (B) (see page 11-340).

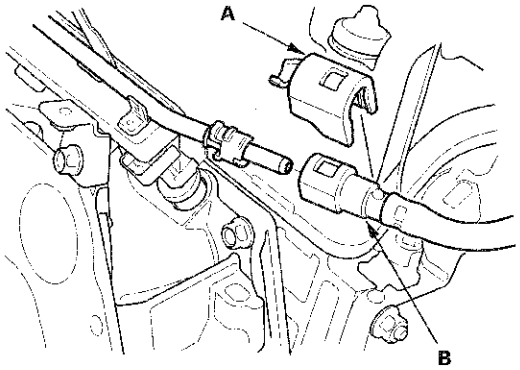

9. Disconnect the four fuel injector connectors (A), the engine mount control solenoid valve connector (B), and remove the ground cables (C).

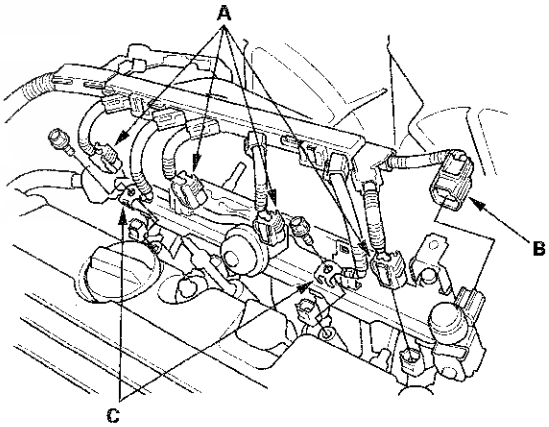

10. Remove the four bolts securing the EVAP canister purge valve bracket.

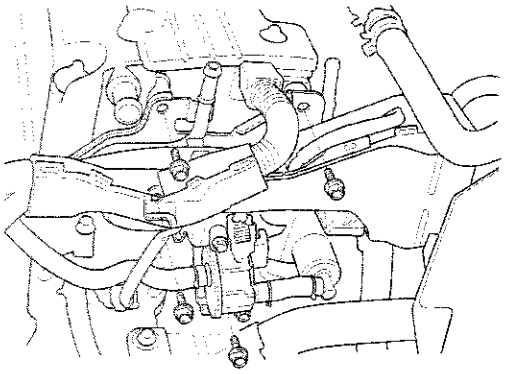

11. Disconnect the upper radiator hose (A), the heater hoses (B), and the water bypass hose (C).

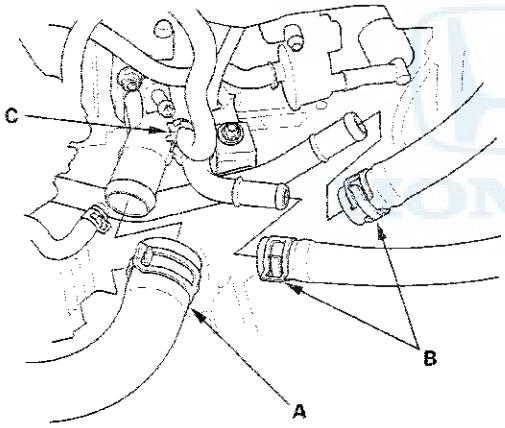

12. Remove the two bolts (A) securing the connecting pipe.

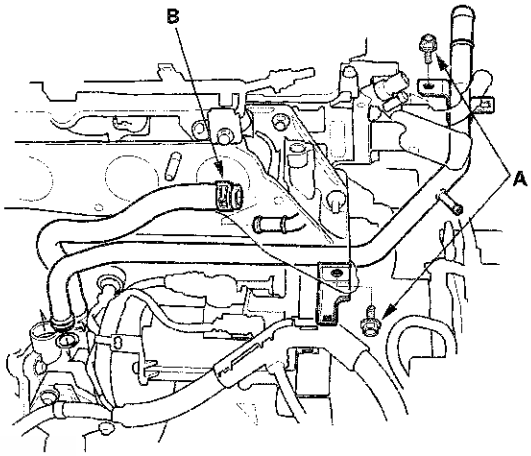

13. Disconnect the water bypass hose (B).

14. Disconnect the following engine wire harness connectors and wire harness clamps from the cylinder head:

- Engine coolant temperature (ECT) sensor 1 connector
- Camshaft position (CMP) sensor A (Intake) connector
- Camshaft position (CMP) sensor B (Exhaust) connector
- Two rocker arm oil control solenoid connectors
- Two rocker arm oil pressure switch connectors
- EVAP canister purge valve connector
- Variable valve timing control (VTC) oil control solenoid valve connector
- Engine oil pressure switch connector

(cont'd)

Cylinder Head Removal (cont'd)

15. Remove the cam chain (see page 6-62).

16. Remove the rocker arm assembly (see page 6-81).

17. Remove the cylinder head bolts. To prevent warpage, loosen the bolts in sequence 1/3 turn at a time; repeat the sequence until all bolts are loosened.

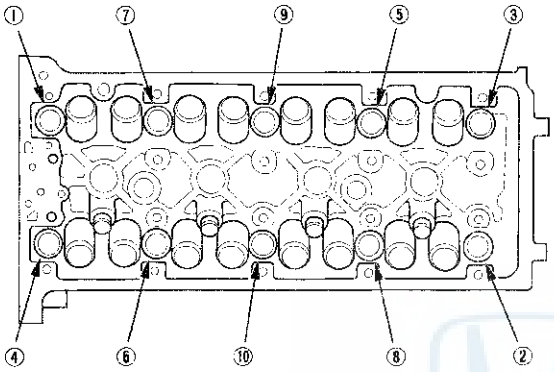

18. Remove the cylinder head.

CMP Pulse Plate A Replacement

1. Remove the cylinder head cover (see page 6-73).

2. Remove camshaft position (CMP) sensor A (see page 11-301).

3. Hold the camshaft with an open-end wrench, then loosen the bolt.

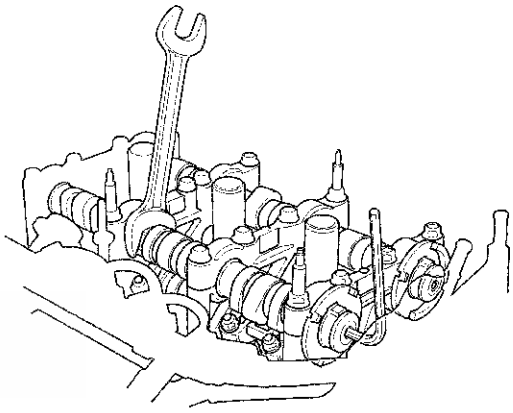

4. Remove CMP pulse plate A.

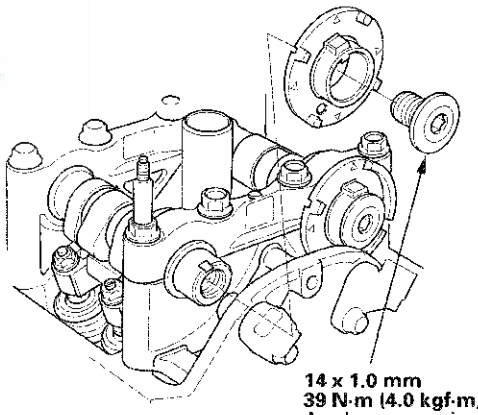

14 x 1.0 mm
39 N·m (4.0 kgf·m, 29 lbf·ft)
Apply new engine oil to the bolt threads.

5. Install CMP pulse plate A in the reverse order of removal.

CMP Pulse Plate B Replacement

1. Remove the cylinder head cover (see page 6-73).

2. Remove camshaft position (CMP) sensor B (see page 11-210).

3. Hold the camshaft with an open-end wrench, then loosen the bolt.

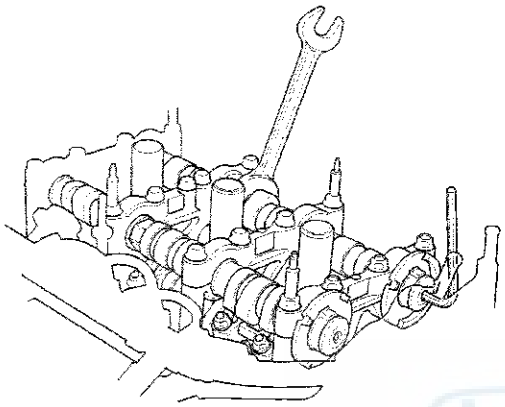

4. Remove CMP pulse plate B.

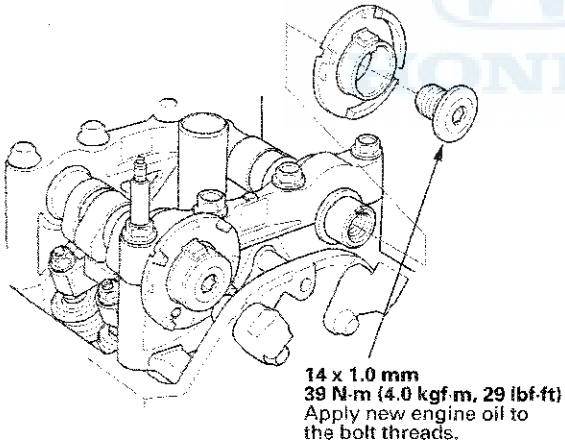

5. Install CMP pulse plate B in the reverse order of removal.

VTC Actuator, Exhaust Camshaft Sprocket Replacement

Removal

1. Remove the cam chain (see page 6-62).

   NOTE: For exhaust camshaft sprocket removal, do steps 3 and 4.

2. If the VTC actuator will be reused, do these steps to avoid damaging the actuator lock pin.
   - –1 Remove the intake camshaft from the cylinder head, and seal the retard holes in the No. 1 camshaft journal with tape and a wire tie (see step 6 on page 6-57).
   - –2 Seal over one one of the advance holes with tape (see page 7 on page 6-57).
   - –3 Apply air to the unsealed advance hole to release the lock (see step 8 on page 6-58).
   - –4 Remove the wire tie, the tape, and the adhesive residue from the camshaft journal.
   - –5 Temporarily reinstall the camshaft and the cam journals on the cylinder head.

3. Hold the camshaft with an open-end wrench, then loosen the variable valve timing control (VTC) actuator mounting bolt or the exhaust camshaft sprocket mounting bolt.

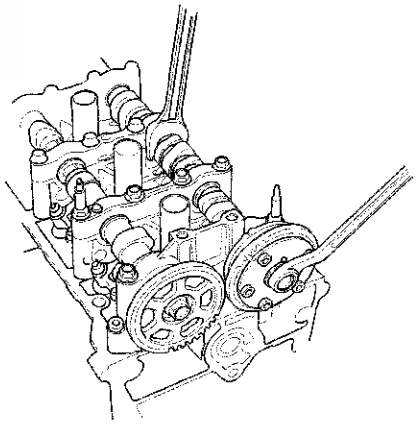

4. Remove the VTC actuator and/or the exhaust camshaft sprocket from the camshaft.

(cont'd)

VTC Actuator, Exhaust Camshaft Sprocket Replacement (cont'd)

1. Install the VTC actuator or the exhaust camshaft sprocket onto the camshaft.

   NOTE: To avoid damage to the VTC actuator, it must be installed in the unlocked position. If necessary, temporarily install the VTC actuator mount bolt hand-tight, and unlock the actuator (see step 2 of removal).

2. Apply new engine oil to the threads of the VTC actuator mounting bolt and the exhaust camshaft mounting bolt, then install them.

3. Hold the camshaft with an open-end wrench, then tighten the bolts.

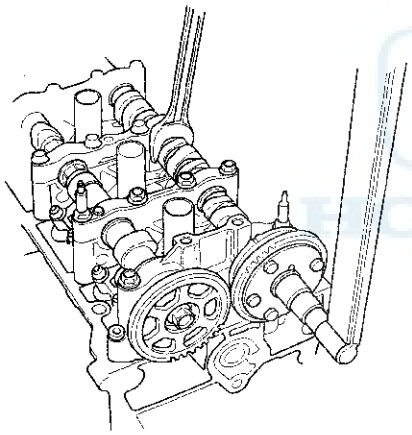

Specified Torque
VTC Actuator Mounting Bolt:
12 x 1.25 mm
113 N·m (11.5 kgf·m, 83 lbf·ft)
Exhaust Camshaft Sprocket Mounting Bolt:
10 x 1.25 mm
72 N·m (7.3 kgf·m, 53 lbf·ft)

4. Hold the camshaft with an open-end wrench, and turn the VTC actuator by hand clockwise until you hear and feel the actuator lock pin click into place.

5. Install the cam chain (see page 6-64).

Cylinder Head Inspection for Warpage

1. Remove the cylinder head (see page 6-76).

2. Inspect the camshaft (see page 6-84).

3. Check the cylinder head for warpage. Measure along the edges, and three ways across the center.

   - If warpage is less than 0.05 mm (0.002 in.) cylinder head resurfacing is not required.
   - If warpage is between 0.05 mm (0.002 in.) and 0.2 mm (0.008 in.), resurface the cylinder head.
   - The maximum resurface limit is 0.2 mm (0.008 in.) based on a height of 104 mm (4.09 in.).

Cylinder Head Height
Standard (New): 103.95—104.05 mm (4.0925—4.0965 in.)

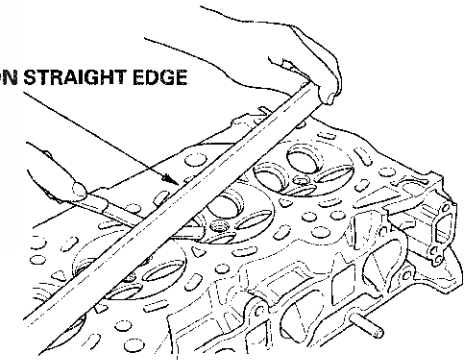

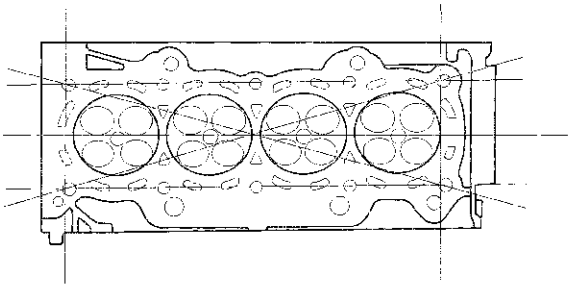

Rocker Arm Assembly Removal

1. Remove the cam chain (see page 6-62).

2. Loosen the rocker arm adjusting screws (A).

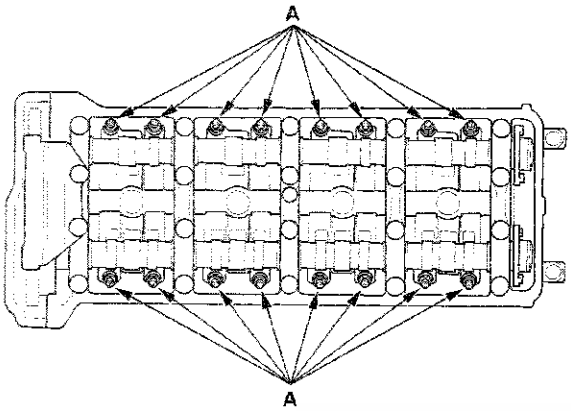

3. Remove the camshaft holder bolts. To prevent damaging the camshafts, loosen the bolts, in sequence, two turns at a time.

   NOTE: Bolt ① is not on all engines.

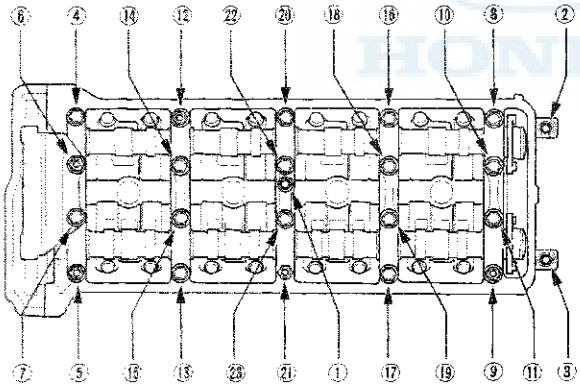

4. Remove cam chain guide B (A), the camshaft holders (B), and the camshafts (C).

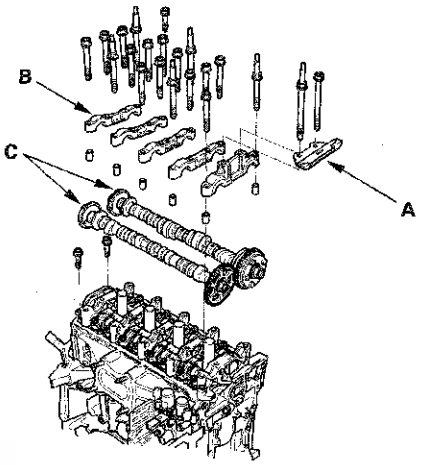

5. Insert the bolts (A) into the rocker shaft holder, then remove the rocker arm assembly (B).

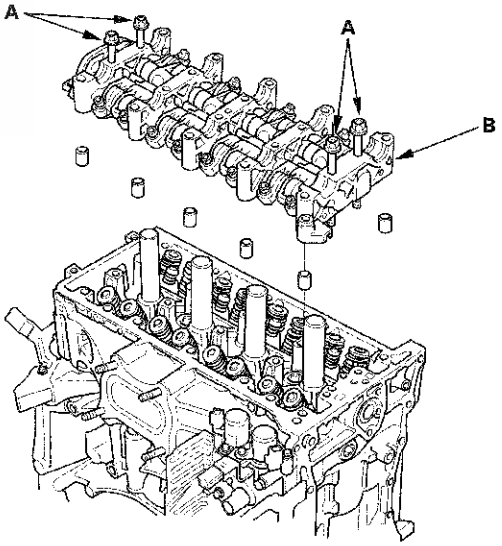

Rocker Arm and Shaft Disassembly/Reassembly

NOTE:
- Identify each part as it is removed so that each item can be reinstalled in its original position.
- Inspect the rocker arm shaft and rocker arms (see page 6-83).
- If reused, the rocker arms must be installed in the same positions.
- When removing, or installing the rocker arm assembly, do not remove the camshaft holder bolts. The bolts will keep the holders and rocker arms on the shaft.
- Prior to reassembling, clean all the parts in solvent, dry them, and apply lubricant to any contact points.
- Bundle the rocker arms with rubber bands to keep them together as a set.
- When replacing the VTEC rocker arm assembly, remove the fastening hardware from the new VTEC rocker arm assembly.

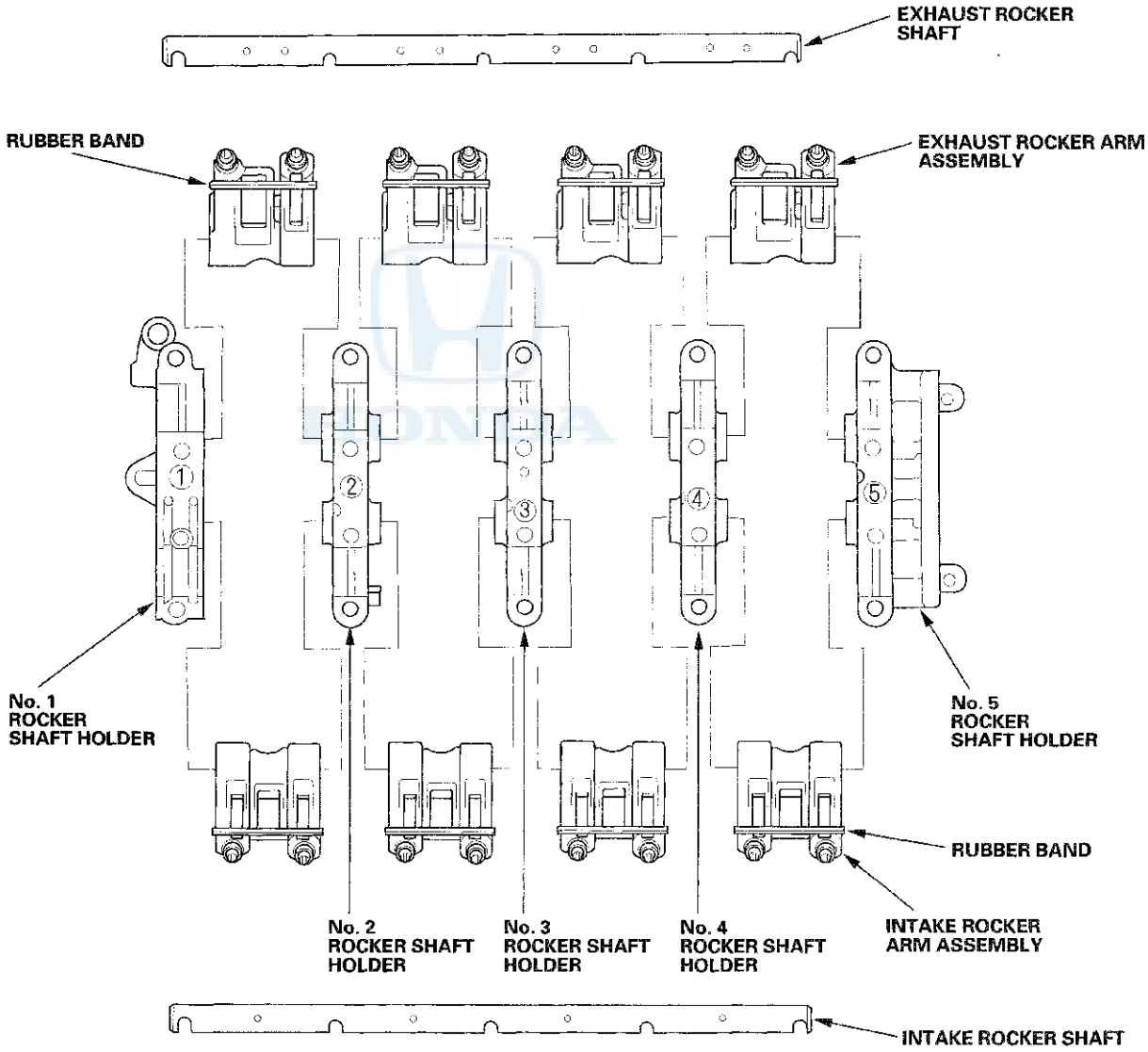

Rocker Arm and Shaft Inspection

1. Remove the rocker arm assembly (see page 6-81).

2. Disassemble the rocker arm assembly (see page 6-82).

3. Measure the diameter of the shaft at the first rocker location.

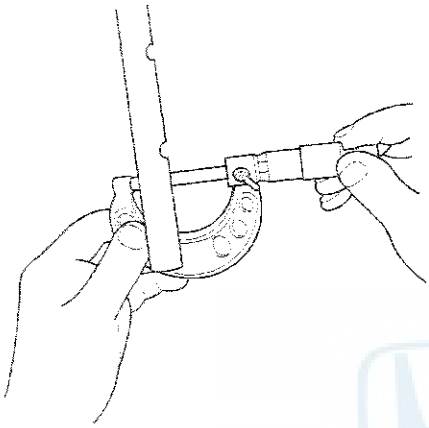

4. Zero the gauge (A) to the shaft diameter.

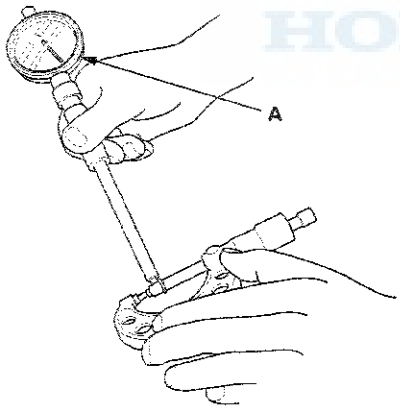

5. Measure the inside diameter of the rocker arm, and check it for an out-of-round condition.

Rocker Arm-to-Shaft Clearance
Standard (New): 0.018—0.059 mm (0.0007—0.0023 in.)
Service Limit: 0.08 mm (0.003 in.)

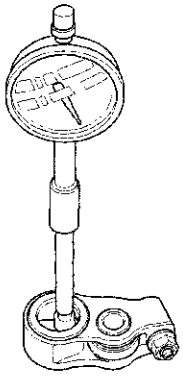

6. Repeat for all intake rocker arms and intake shaft. If the clearance is beyond the service limit, replace the rocker shaft and all out of service limit rocker arms. If any VTEC rocker arm needs replacement, replace the intake rocker arms (primary, mid, and secondary), as a set.

7. Repeat for all exhaust rocker arms and exhaust shaft. If the clearance is beyond the service limit, replace the rocker shaft and all out of service limit rocker arms. If any VTEC rocker arm needs replacement, replace the exhaust rocker arms (primary and secondary), as a set.

(cont'd)

Rocker Arm and Shaft Inspection (cont'd)

8. Inspect the rocker arm pistons (A). Push on each piston manually. If it does not move smoothly, replace the rocker arm set.

   NOTE: Apply new engine oil to the rocker arm pistons when reassembling.

   Intake side

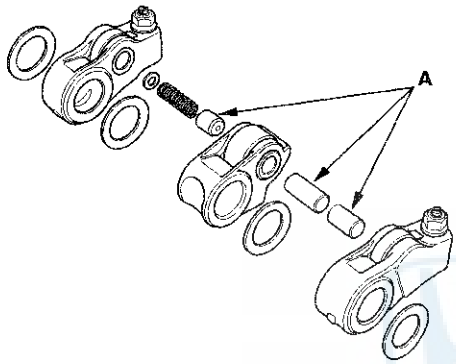

   Exhaust side

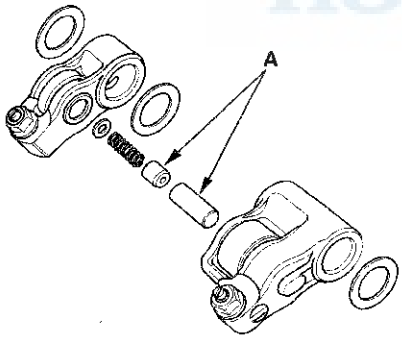

9. Install the rocker arm assembly (see page 6-93).

Camshaft Inspection

NOTE: Do not rotate the camshaft during inspection.

1. Remove the rocker arm assembly (see page 6-81).

2. Put the rocker shaft holders, the camshaft, and the camshaft holders on the cylinder head, then tighten the bolts, in sequence, to the specified torque.

   NOTE: If the engine does not have bolt ㉑, skip it and continue the torque sequence.

   Specified Torque
   8 x 1.25 mm
   22 N·m (2.2 kgf·m, 16 lbf·ft)
   6 x 1.0 mm
   12 N·m (1.2 kgf·m, 8.7 lbf·ft)
   6 x 1.0 mm Bolts: ㉑, ㉒, ㉓

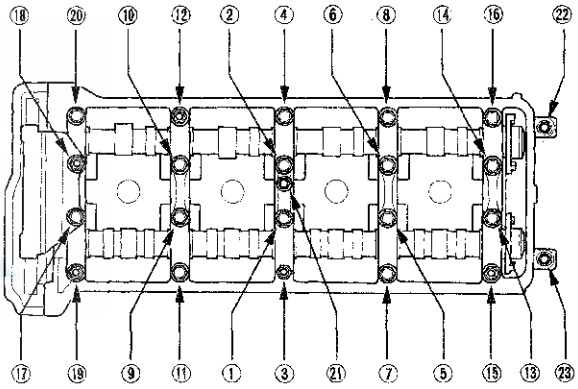

3. Seat the camshaft by pushing it away from the camshaft pulley end of the cylinder head.

4. Zero the dial indicator against the end of the camshaft, then push the camshaft back and forth, and read the end play. If the end play is beyond the service limit, replace the cylinder head and recheck. If it is still beyond the service limit, replace the camshaft.

Camshaft End Play
Standard (New): 0.05—0.20 mm (0.002—0.008 in.)
Service Limit: 0.4 mm (0.02 in.)

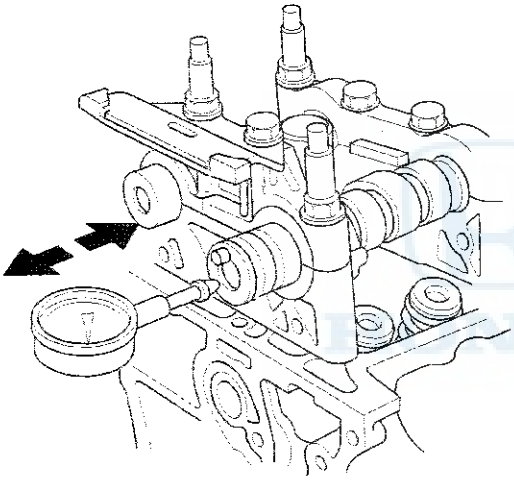

5. Loosen the camshaft holder bolts two turns at a time, in a crisscross pattern. Then remove the camshaft holders from the cylinder head.

6. Lift the camshafts out of the cylinder head, wipe them clean, then inspect the lift ramps. Replace the camshaft if any lobes are pitted, scored, or excessively worn.

7. Clean the camshaft journal surfaces in the cylinder head, then set the camshafts back in place. Place a plastigage strip across each journal.

8. Install the camshaft holders, then tighten the bolts to the specified torque as shown in step 2.

9. Remove the camshaft holders. Measure the widest portion of plastigage on each journal.

   - If the camshaft-to-holder clearance is within the service limits, go to step 11.
   - If the camshaft-to-holder clearance is beyond the service limit, and the camshaft has been replaced, replace the cylinder head.
   - If the camshaft-to-holder clearance is beyond the service limit, and the camshaft has not been replaced, go to step 10.

Camshaft-to-Holder Oil Clearance
Standard (New):

No. 1 Journal:	**0.030—0.069 mm (0.0012—0.003 in.)**
No. 2, 3, 4, 5 Journals:	**0.060—0.099 mm (0.002—0.004 in.)**
Service Limit:	**0.15 mm (0.006 in.)**

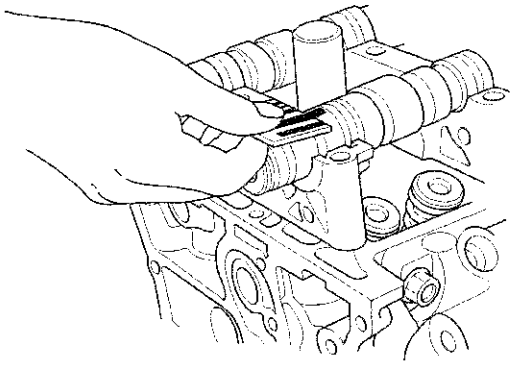

(cont'd)

Camshaft Inspection (cont'd)

10. Check the total runout with the camshaft supported on V-blocks.

    - If the total runout of the camshaft is within the service limit, replace the cylinder head.
    - If the total runout is beyond the service limit, replace the camshaft and recheck the camshaft-to-holder oil clearance. If the oil clearance is still beyond the service limit, replace the cylinder head.

    Camshaft Total Runout
    Standard (New): 0.03 mm (0.0012 in.) max.
    Service Limit: 0.04 mm (0.002 in.)

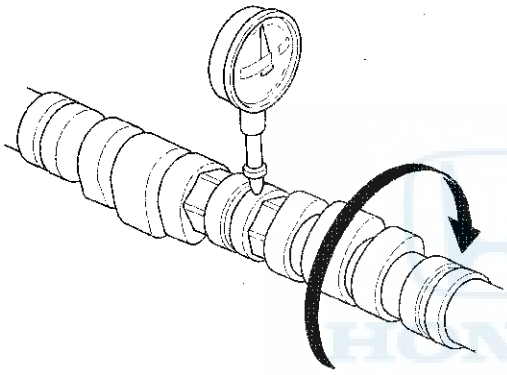

11. Measure the cam lobe height.

    Cam Lobe Height Standard (New):

	INTAKE	EXHAUST
PRI	33.744 mm (1.3285 in.)	34.232 mm (1.3477 in.)
MID	35.456 mm (1.3959 in.)	——
SEC	33.744 mm (1.3285 in.)	ZERO LIFT

PRI: Primary MID: Mid SEC: Secondary
C/C: Cam Chain

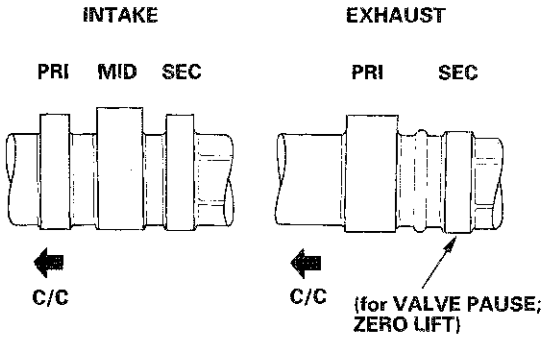

Valve, Spring, and Valve Seal Removal

Special Tools Required
Valve spring compressor attachment 07757-PJ1010A

Identify the valves and the valve springs as they are removed so that each item can be reinstalled in its original position.

1. Remove the cylinder head (see page 6-76).

2. Using an appropriate-sized socket (A) and plastic mallet (B), lightly tap the spring retainer to loosen the valve cotters.

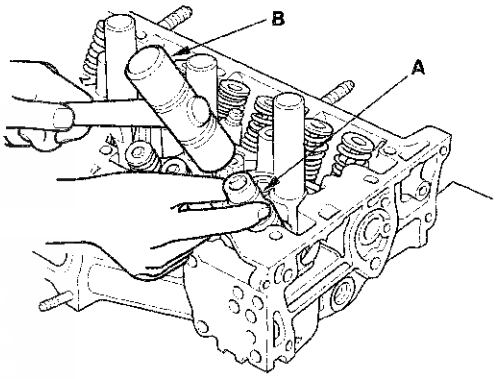

3. Install the valve spring compressor attachment and the valve spring compressor. Compress the spring, and remove the valve cotters.

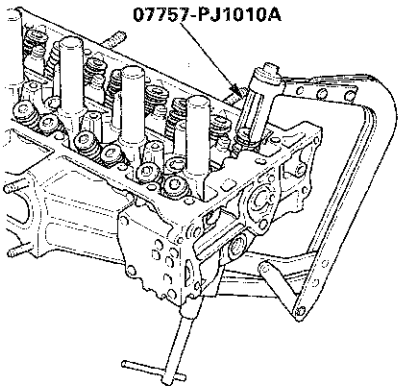

4. Remove the valve spring compressor and the valve spring compressor attachment, then remove the spring retainer and the valve spring.

5. Install the valve guide seal remover.

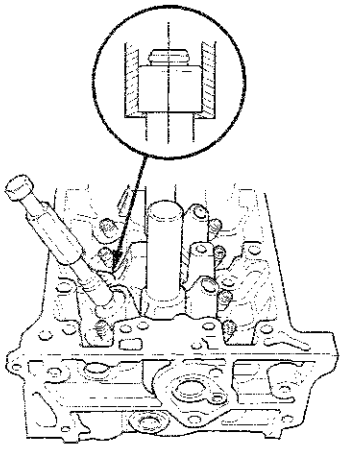

6. Remove the valve seal.

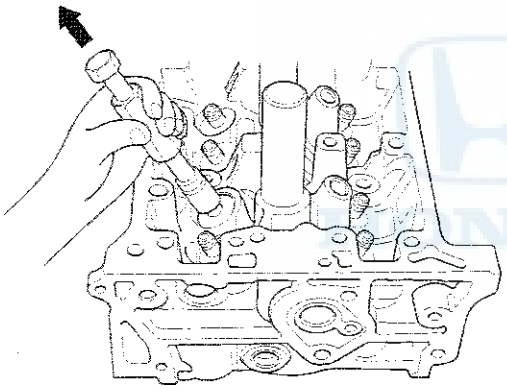

Valve Inspection

1. Remove the valves (see page 6-86).

2. Measure the valve in these areas.

Intake Valve Dimensions
A Standard (New): 35.85—36.15 mm (1.411—1.423 in.)
B Standard (New): 108.5—109.1 mm (4.272—4.295 in.)
C Standard (New): 5.475—5.485 mm (0.2156—0.2159 in.)
C Service Limit: 5.445 mm (0.214 in.)

Exhaust Valve Dimensions
A Standard (New): 30.85—31.15 mm (1.215—1.226 in.)
B Standard (New): 108.4—109.0 mm (4.268—4.291 in.)
C Standard (New): 5.450—5.460 mm (0.2146—0.2150 in.)
C Service Limit: 5.42 mm (0.213 in.)

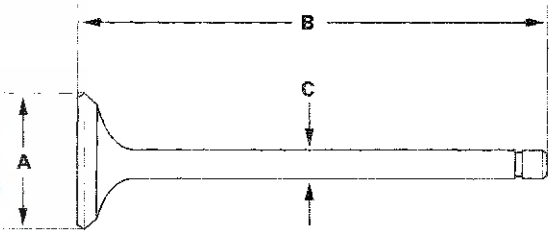

Valve Stem-to-Guide Clearance Inspection

1. Remove the valves (see page 6-86).

2. Slide the valve out of its guide about 10 mm (0.39 in.), then measure the stem-to-guide clearance with a dial indicator while rocking the stem in the direction of normal thrust (wobble method).
   - If the measurement exceeds the service limit, recheck it using a new valve.
   - If the measurement is now within the service limit, reassemble using a new valve.
   - If the measurement with a new valve still exceeds the service limit, go to step 3.

   Intake Valve Stem-to-Guide Clearance
   Standard (New): 0.06—0.11 mm (0.002—0.004 in.)
   Service Limit: 0.16 mm (0.006 in.)

   Exhaust Valve Stem-to-Guide Clearance
   Standard (New): 0.11—0.16 mm (0.004—0.006 in.)
   Service Limit: 0.22 mm (0.009 in.)

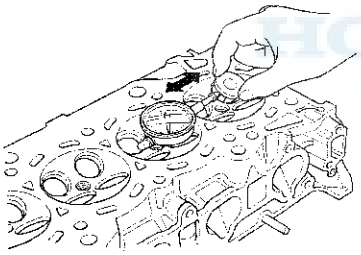

3. Subtract the O.D. of the valve stem, measured with a micrometer, from the I.D. of the valve guide, measured with an inside micrometer or ball gauge. Take the measurements in three places along the valve stem and three places inside the valve guide. The difference between the largest guide measurement and the smallest stem measurement should not exceed the service limit.

   Intake Valve Stem-to-Guide Clearance
   Standard (New): 0.030—0.055 mm (0.0012—0.0022 in.)
   Service Limit: 0.08 mm (0.003 in.)

   Exhaust Valve Stem-to-Guide Clearance
   Standard (New): 0.055—0.080 mm (0.0022—0.0031 in.)
   Service Limit: 0.11 mm (0.004 in.)

Valve Guide Replacement

Special Tools Required
- Valve guide driver, 5.5 mm 07742-0010100
- Valve guide reamer, 5.5 mm 07HAH-PJ7A100

1. Inspect the valve stem-to-guide clearance (see page 6-88).

2. As illustrated, use a commercially available air-impact valve guide driver (A) modified to fit the diameter of the valve guides. In most cases, the same procedure can be done using the valve guide driver, 5.5 mm and a conventional hammer.

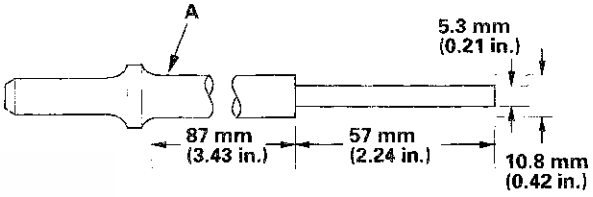

3. Select the proper replacement guides, and chill them in the freezer section of a refrigerator for at least an hour.

4. Use a hot plate or oven to evenly heat the cylinder head to 300 °F (150 °C). Monitor the temperature with a cooking thermometer. Do not get the head hotter than 300 °F (150 °C); excessive heat may loosen the valve seats.

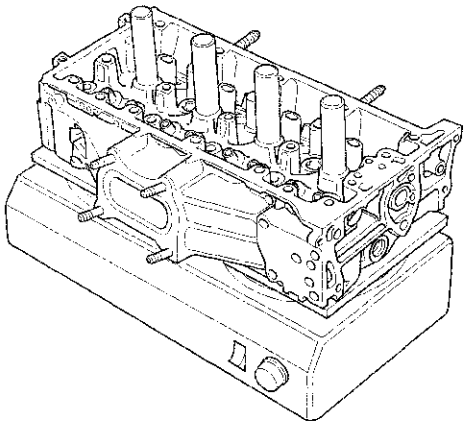

5. Working from the camshaft side, use the driver and an air hammer to drive the guide about 2 mm (0.1 in.) towards the combustion chamber. This will knock off some of the carbon and make removal easier. Hold the air hammer directly in line with the valve guide to prevent damaging the driver.

6. Turn the head over, and drive the guide out toward the camshaft side of the head.

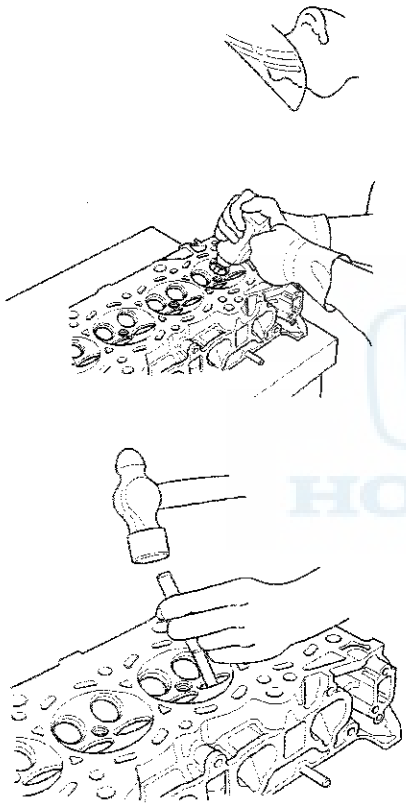

7. If a valve guide won't move, drill it out with a 8 mm (5/16 in.) bit, then try again.

   NOTE: Drill guides only in extreme cases; you could damage the cylinder head if the guide breaks.

8. Remove the new guide(s) from the freezer, one at a time, as you need them.

9. Apply a thin coat of new engine oil to the outside of the new valve guide. Install the guide from the camshaft side of the head; use the valve guide driver, 5.5 mm to drive the guide in to the specified installed height (A) of the guide (B). If you have all 16 guides to do, you may have to reheat the head.

Valve Guide Installed Height
Intake: 15.2—16.2 mm (0.598—0.638 in.)
Exhaust: 15.5—16.5 mm (0.610—0.650 in.)

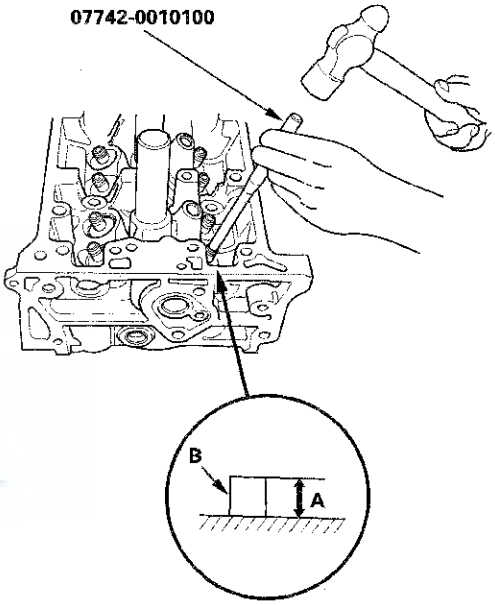

(cont'd)

Valve Guide Replacement (cont'd)

10. Coat both the valve guide reamer, 5.5 mm and the valve guide with cutting oil.

11. Rotate the reamer clockwise to the full length of the valve guide bore.

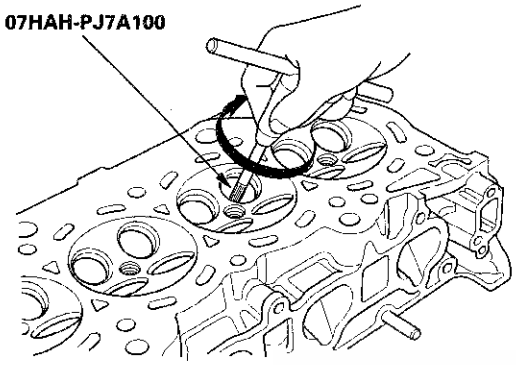

12. Continue to rotate the reamer clockwise while removing it from the bore.

13. Thoroughly wash the guide in detergent and water to remove any cutting residue.

14. Check the clearances with a valve (see page 6-88). Verify that a valve slides into the intake and exhaust valve guides without sticking.

Valve Seat Reconditioning

1. Inspect the valve stem-to-guide clearance (see page 6-88). If the valve guides are worn, replace them (see page 6-88) before cutting the valve seats.

2. Renew the valve seats in the cylinder head using a valve seat cutter.

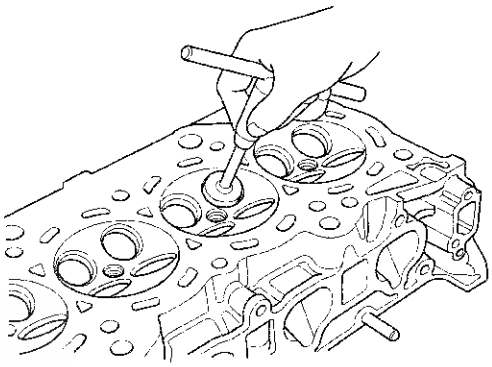

3. Carefully cut a 45 ° seat, removing only enough material to ensure a smooth and concentric seat.

4. Bevel the upper and lower edges at the angles shown in the illustration.
   Check the width of the seat and adjust accordingly.

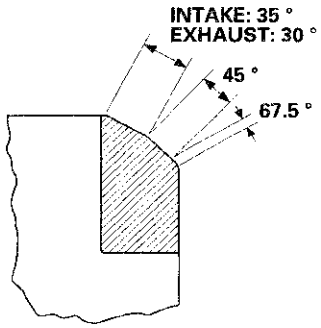

5. Make one more very light pass with the 45 ° cutter to remove any possible burrs caused by the other cutters.

   Valve Seat Width
   Standard (New): 1.25—1.55 mm (0.049—0.061 in.)
   Service Limit: 2.00 mm (0.079 in.)

6. After resurfacing the seat, inspect for even valve seating. Apply Prussian Blue compound (A) to the valve face. Insert the valve in its original location in the head, then lift it and snap it closed against the seat several times.

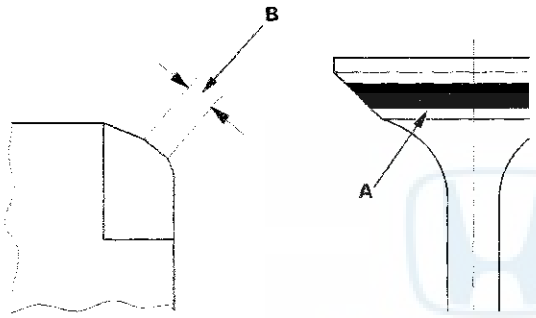

7. The actual valve seating surface (B), as shown by the blue compound, should be centered on the seat.

   - If it is too high (closer to the valve stem), you must make a second cut with the 67.5 ° cutter to move it down, then one more cut with the 45 ° cutter to restore seat width.
   - If it is too low (close to the valve edge), you must make a second cut with the 35 ° cutter (intake side) or the 30 ° cutter (exhaust side) to move it up, then make one more cut with the 45 ° cutter to restore seat width.

   NOTE: The final cut should always be made with the 45 ° cutter.

8. Insert the intake and exhaust valves in the head, and measure the valve stem installed height (A).

   Intake Valve Stem Installed Height
   Standard (New): 44.0—44.5 mm (1.73—1.75 in.)
   Service Limit: 44.7 mm (1.76 in.)

   Exhaust Valve Stem Installed Height
   Standard (New): 44.0—44.5 mm (1.73—1.75 in.)
   Service Limit: 44.7 mm (1.76 in.)

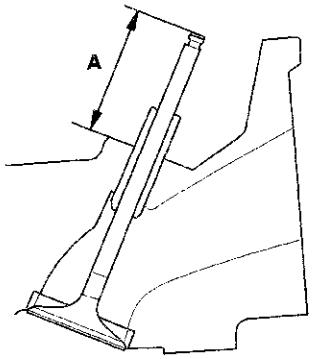

9. If valve stem installed height is beyond the service limit, replace the valve and recheck. If it is still beyond the service limit, replace the cylinder head; the valve seat in the head is too deep.

Valve, Spring, and Valve Seal Installation

Special Tools Required
- Stem seal driver 07PAD-0010000
- Valve spring compressor attachment 07757-PJ1010A

1. Coat the valve stems with new engine oil. Install the valves in the valve guides.
2. Check that the valves move up and down smoothly.
3. Install the spring seats on the cylinder head.
4. Install the new valve seals (A) using the 5.5 mm side of the stem seal driver (B).

   NOTE: The exhaust valve seal (C) has a black spring (D), and the intake valve seal (E) has a white spring (F). They are not interchangeable.

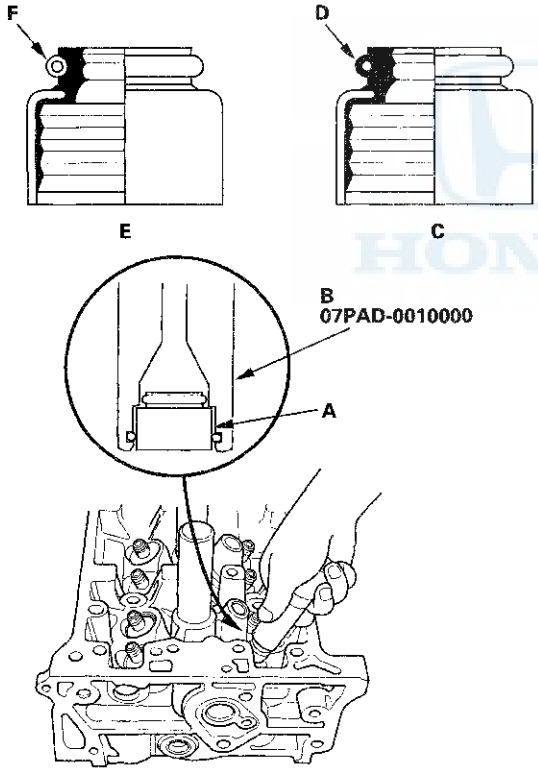

5. Install the valve spring and the spring retainer. Place the end of the valve spring with the closely wound coils toward the cylinder head.
6. Install the valve spring compressor attachment and the valve spring compressor. Compress the spring, and install the valve cotters.

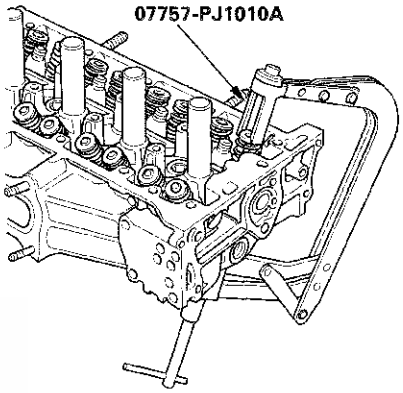

7. Remove the valve spring compressor and the valve spring compressor attachment.
8. Lightly tap the end of each valve stem two or three times with a plastic mallet (A) to ensure proper seating of the valve and the valve cotters. Tap the valve stem only along its axis so you do not bend the stem.

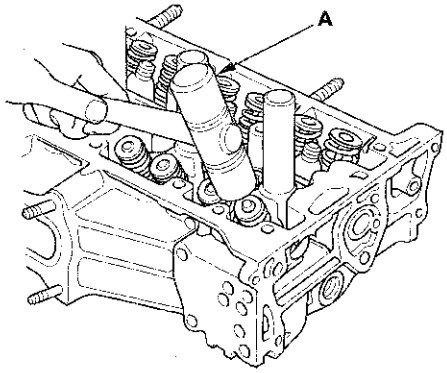

Rocker Arm Assembly Installation

1. Reassemble the rocker arm assembly (see page 6-82).

2. Clean and dry the No. 5 rocker shaft holder mating surface.

3. Apply liquid gasket, P/N 08717-0004, 08718-0001, 08718-0003, or 08718-0009, evenly to the cylinder head mating surface of the No. 5 rocker shaft holder, and to the inside edge of the threaded bolt holes. Install the component within 5 minutes of applying the liquid gasket.

   NOTE:
   - If you apply liquid gasket P/N 08718-0012, the component must be installed within 4 minutes.
   - If too much time has passed after applying the liquid gasket, remove the old liquid gasket and residue, then reapply new liquid gasket.

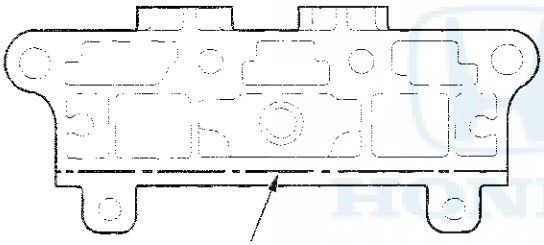

Apply liquid gasket along the broken line.

4. Insert the bolts (A) into the rocker shaft holder, then install the rocker arm assembly (B) on the cylinder head.

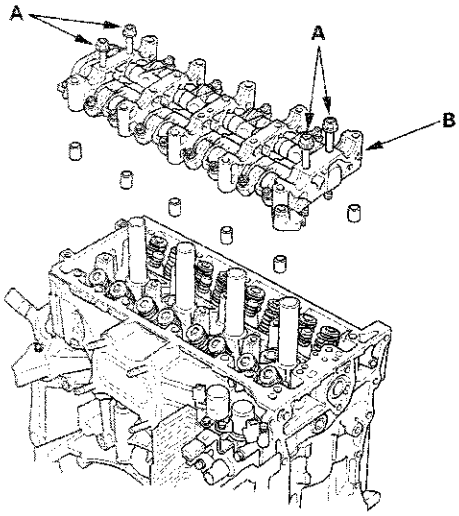

5. Remove the bolts from the rocker shaft holder.

6. Make sure the punch marks on the variable valve timing control (VTC) actuator and the exhaust camshaft sprocket are facing up, then set the camshafts (A) in the holder.

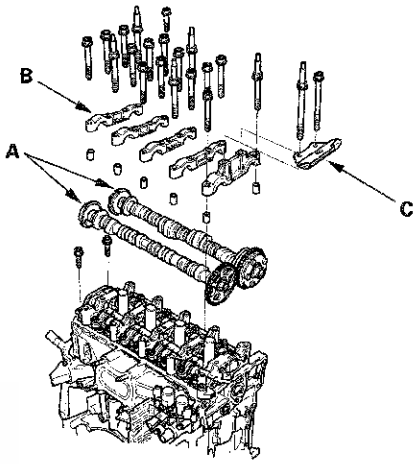

7. Set the camshaft holders (B) and cam chain guide B (C) in place.

8. Tighten the bolts to the specified torque.

   NOTE: If the engine does not have bolt ㉑, skip it and continue the torque sequence.

   Specified Torque
   8 x 1.25 mm
   22 N·m (2.2 kgf·m, 16 lbf·ft)
   6 x 1.0 mm
   12 N·m (1.2 kgf·m, 8.7 lbf·ft)
   6 x 1.0 mm Bolts: ㉑, ㉒, ㉓

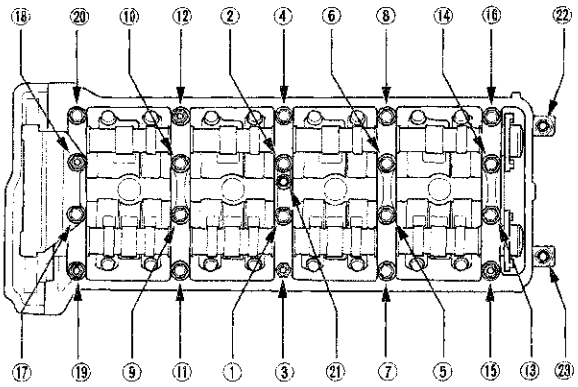

9. Install the cam chain (see page 6-64), then adjust the valve clearance (see page 6-58).

Cylinder Head Installation

1. Install a new coolant separator (A) in the engine block whenever the engine block is replaced.

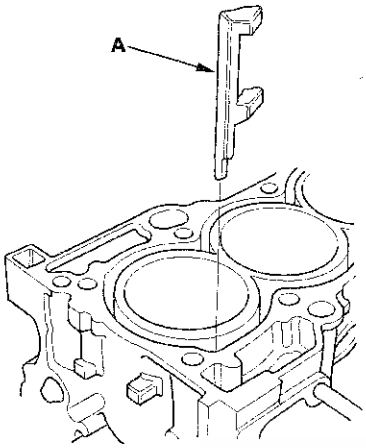

2. Clean the cylinder head and the engine block surface.

3. Install the new cylinder head gasket (A) and the dowel pins (B) on the engine block. Always use a new cylinder head gasket.

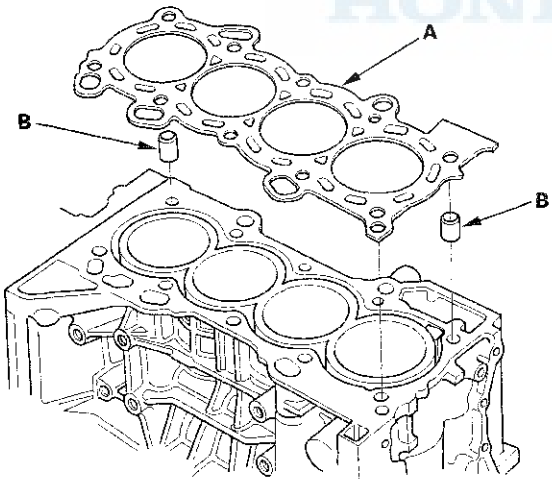

4. Set the crankshaft to top dead center (TDC). Align the TDC mark (A) on the crankshaft sprocket with the pointer (B) on the engine block.

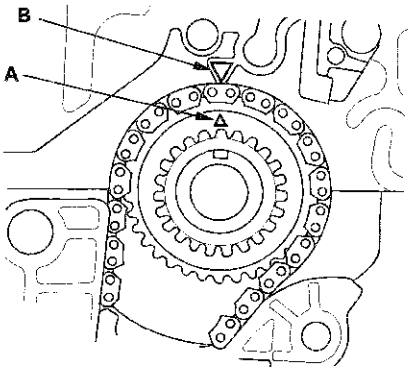

5. Install the cylinder head on the engine block.

6. Measure the diameter of each cylinder head bolt at point A and point B.

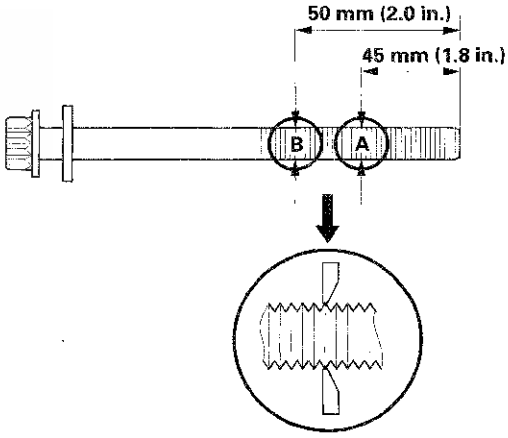

7. If either diameter is less than 10.6 mm (0.42 in.), replace the cylinder head bolt.

8. Apply new engine oil to the threads and under the bolt heads of all cylinder head bolts.

9. Tighten the cylinder head bolts in sequence to 39 N·m (4.0 kgf·m, 29 lbf·ft). Use a beam-type torque wrench. When using a preset click-type torque wrench, be sure to tighten slowly and do not overtighten. If a bolt makes any noise while you are torquing it, loosen the bolt and retighten it from the first step.

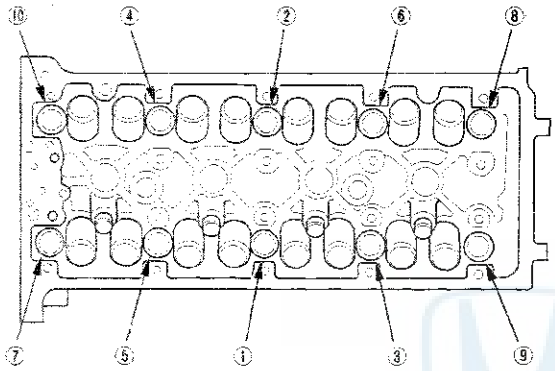

10. After torquing, tighten all cylinder head bolts in two steps (90 ° per step) using the sequence shown in step 9. If you are using a new cylinder head bolt, tighten the bolt an extra 90 °.

    NOTE: Remove the cylinder head bolt if you tightened it beyond the specified angle, and go back to step 6 of the procedure. Do not loosen it back to the specified angle.

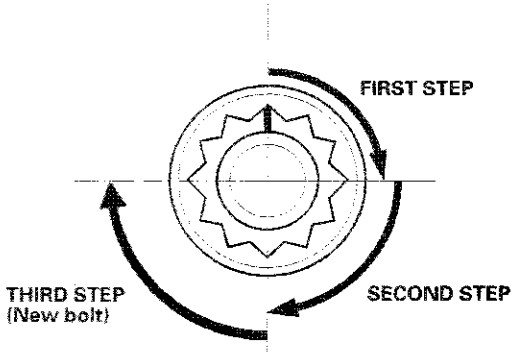

11. Install the rocker arm assembly (see page 6-93).

12. Install the cam chain (see page 6-64).

13. Connect the following engine wire harness connectors, and install the wire harness clamps to the cylinder head:

    - Engine coolant temperature (ECT) sensor 1 connector
    - Camshaft position (CMP) sensor A (Intake) connector
    - Camshaft position (CMP) sensor B (Exhaust) connector
    - Two rocker arm oil control solenoid connectors
    - Two rocker arm oil pressure switch connectors
    - Evaporative emission (EVAP) canister purge valve connector
    - Variable valve timing control (VTC) oil control solenoid valve connector
    - Engine oil pressure switch connector

14. Install the two bolts (A) securing the connecting pipe.

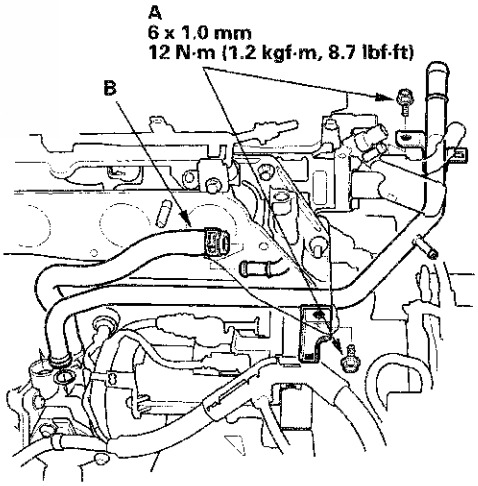

15. Connect the water bypass hose (B).

(cont'd)

Cylinder Head Installation (cont'd)

16. Connect the upper radiator hose (A), the heater hoses (B), and the water bypass hose (C).

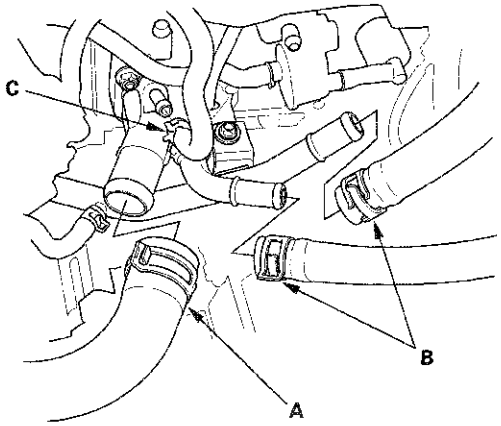

17. Install the four bolts securing the EVAP canister purge valve bracket.

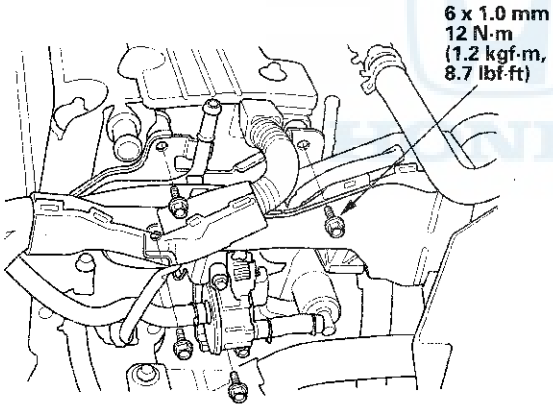

18. Connect the four fuel injector connectors (A), the engine mount control solenoid valve connector (B), and install the ground cables (C).

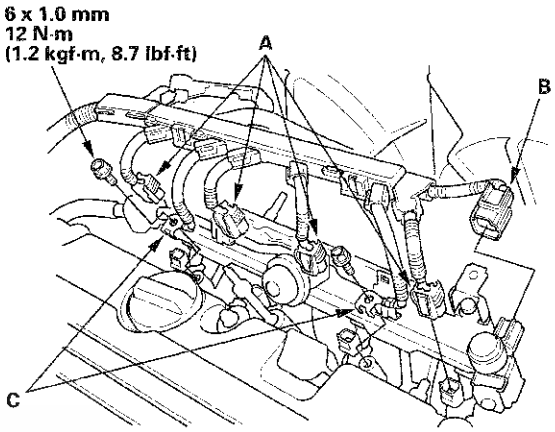

19. Connect the fuel feed hose (A) (see page 11-343), then install the quick-connect fitting cover (B).

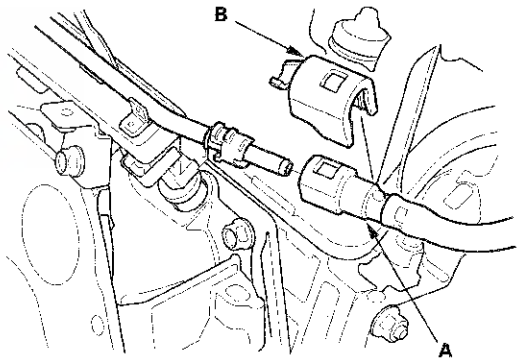

20. Connect the EVAP canister hose (A).

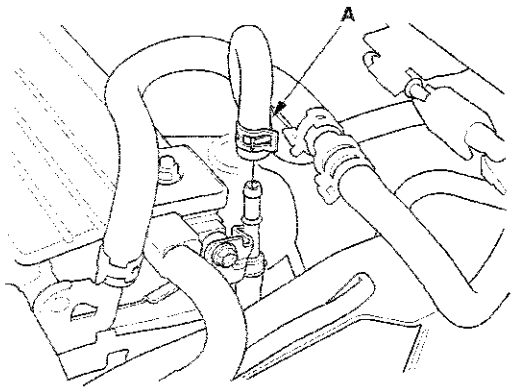

21. Install the catalytic converter (see page 11-367).

22. Install the intake manifold (see page 9-5).

23. Install the drive belt (see page 4-30).

24. Install the strut brace (if equipped) (see page 20-289).

25. After installation, check that all tubes, hoses, and connectors are installed correctly.

26. Inspect for fuel leaks. Turn the ignition switch to ON (II) (do not operate the starter) so the fuel pump runs for about 2 seconds and pressurizes the fuel line. Repeat this operation three times, then check for fuel leakage at any point in the fuel line.

27. Refill the radiator with engine coolant, and bleed the air from the cooling system with the heater valve open (see step 6 on page 10-6).

28. Check for fluid leaks.

29. Do the powertrain control module (PCM) idle lean procedure (see page 11-317).

30. Do the crankshaft position (CKP) pattern clear/CKP pattern lean procedure (see page 11-5).

31. Inspect the idle speed (see page 11-316).

32. Inspect the ignition timing (see page 4-19).

Sealing Bolt Installation

NOTE: When installing the sealing bolt, always use a new washer.

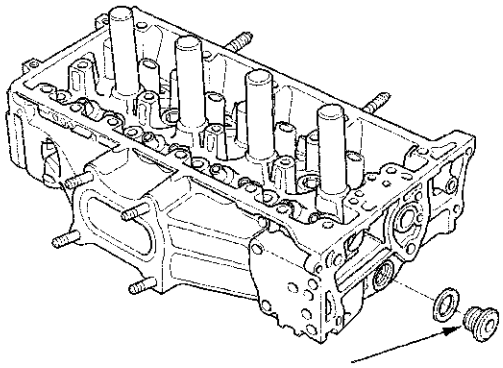

22 x 1.5 mm
74 N·m (7.5 kgf·m, 54 lbf·ft)

Navigation Tools: Click on the “Table of Contents” below, or use the Bookmarks to the left.

Engine Mechanical

Engine Block

Special Tools 7-2
Component Location Index 7-3
Connecting Rod and Crankshaft End Play Inspection 7-5
Crankshaft Main Bearing Replacement 7-6
Connecting Rod Bearing Replacement 7-9
Oil Pan Removal 7-11
Crankshaft and Piston Removal 7-14
Crankshaft Inspection 7-16
Block and Piston Inspection 7-17
Cylinder Bore Honing 7-19
Piston, Pin, and Connecting Rod Replacement 7-19
Piston Ring Replacement 7-22
Piston Installation 7-24
Connecting Rod Bolt Inspection 7-26
Crankshaft Installation 7-27
CKP Pulse Plate Replacement 7-30
Oil Pan Installation 7-31
Transmission End Crankshaft Oil Seal Installation - In Car 7-34
Sealing Bolt Installation 7-35

Special Tools

Ref. No.	Tool Number	Description	Qty
①	07ZAD-PNAA100	Oil Seal Driver Attachment 96	1
②	07746-0010700	Attachment, 24 x 26 mm	1
③	07749-0010000	Driver	1

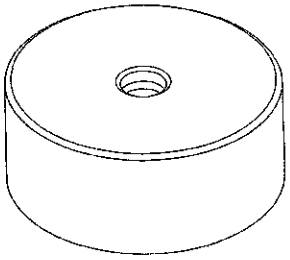

①

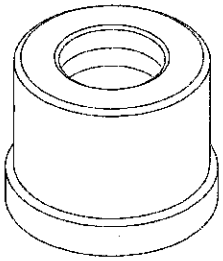

②

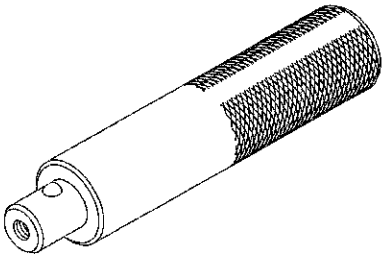

③

HONDA

Component Location Index

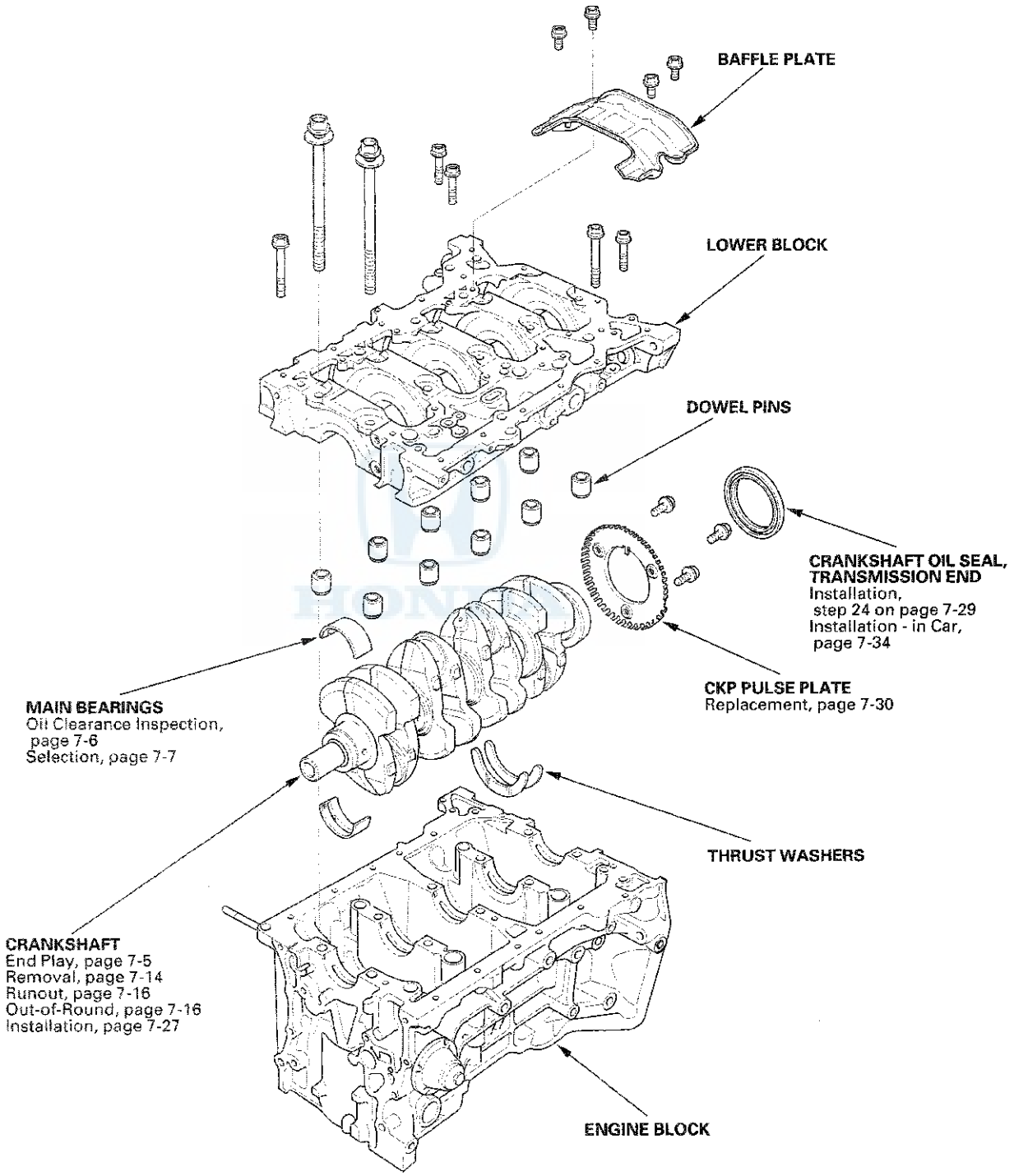

(cont'd)

Component Location Index (cont'd)

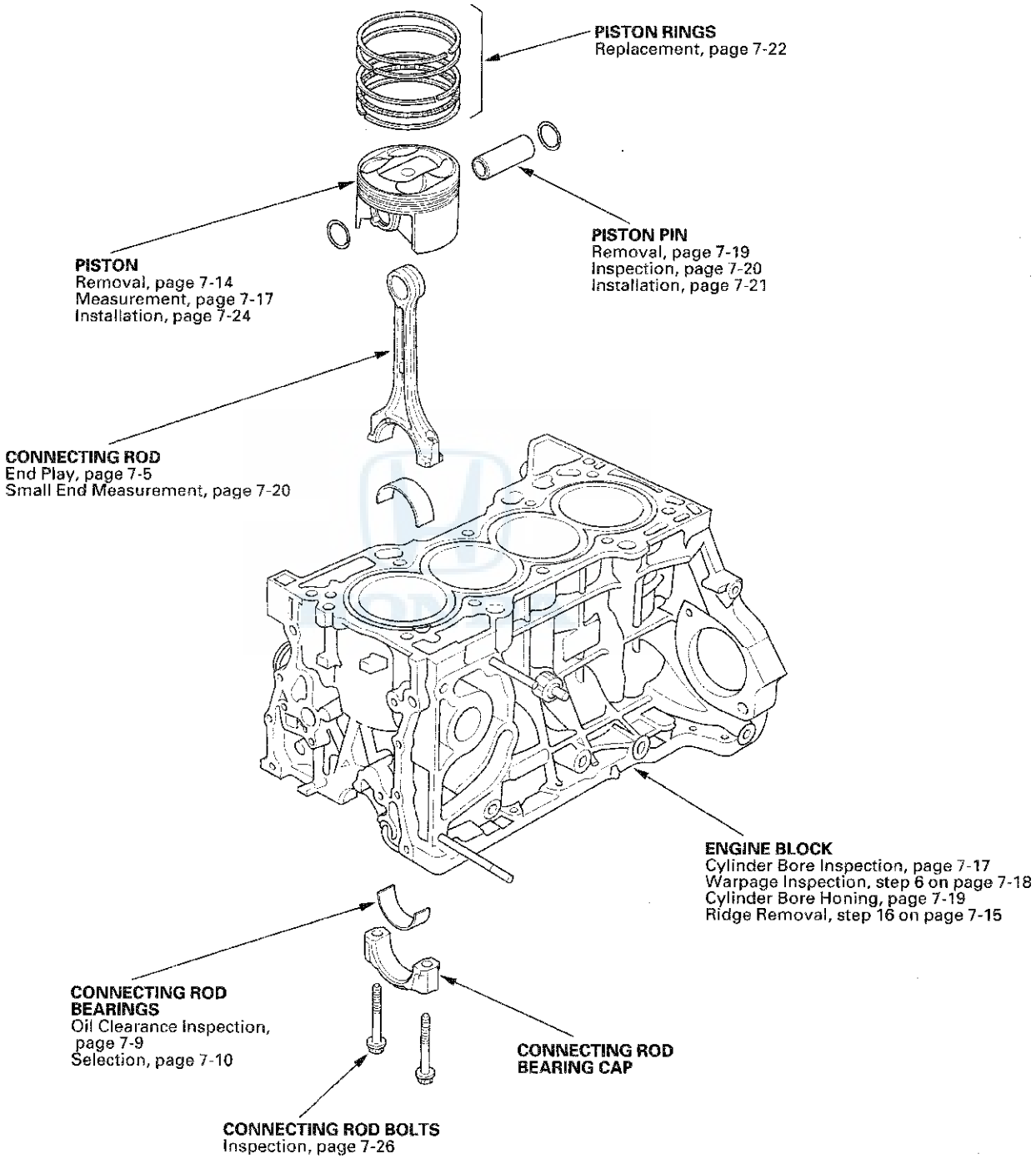

Connecting Rod and Crankshaft End Play Inspection

1. Remove the oil pump (see page 8-14).

2. Remove the baffle plate (see step 8 on page 7-14).

3. Measure the connecting rod end play with a feeler gauge between the connecting rod and the crankshaft.

   Connecting Rod End Play
   Standard (New): 0.15—0.35 mm (0.006—0.014 in.)
   Service Limit: 0.40 mm (0.016 in.)

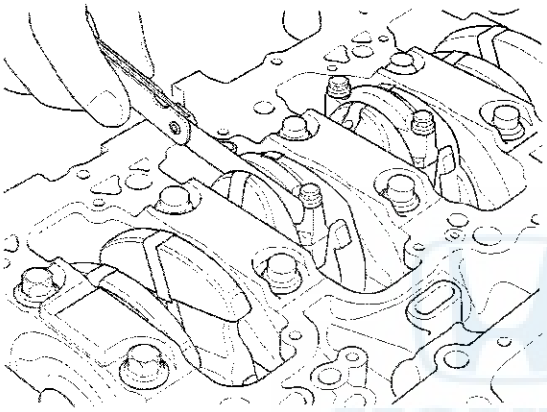

4. If the connecting rod end play is beyond the service limit, install a new connecting rod, and recheck. If it is still beyond the service limit, replace the crankshaft (see page 7-14).

5. Push the crankshaft firmly away from the dial indicator, and zero the dial against the end of the crankshaft. Then pull the crankshaft firmly back toward the indicator; the dial reading should not exceed the service limit.

   Crankshaft End Play
   Standard (New): 0.10—0.35 mm (0.004—0.014 in.)
   Service Limit: 0.45 mm (0.018 in.)

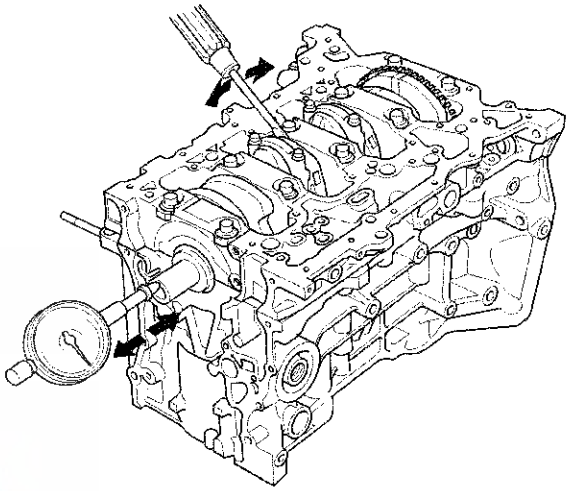

6. If the end play is beyond the service limit, replace the thrust washers and recheck, if it is still beyond the service limit, replace the crankshaft (see page 7-14).

Crankshaft Main Bearing Replacement

Main Bearing Clearance Inspection

1. To check the main bearing-to-journal oil clearance, remove the lower block and the bearing halves (see page 7-14).

2. Clean each main journal and the bearing half with a clean shop towel.

3. Place one strip of plastigage across each main journal.

4. Reinstall the bearings and the lower block, then tighten the bolts to 29 N·m (3.0 kgf·m, 22 lbf·ft).

   NOTE:
   - Apply new engine oil to the bolt threads and flanges.
   - Do not rotate the crankshaft during inspection.

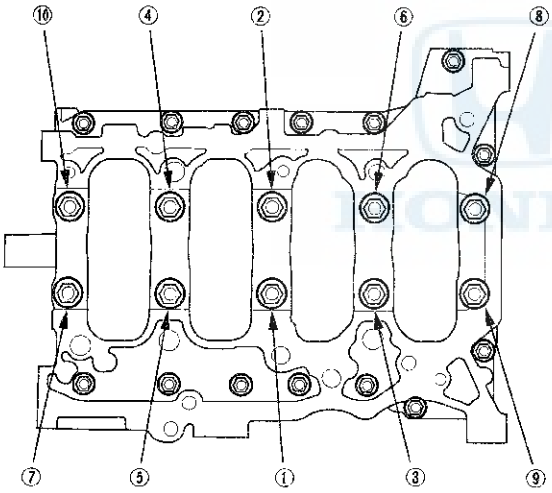

5. Tighten the bearing cap bolts an additional 48 °.

6. Remove the lower block and the bearings again, and measure the widest part of the plastigage.

   Main Bearing-to-Journal Oil Clearance
   No. 1, 2, 4, 5 Journals:
   Standard (New): 0.017 — 0.041 mm (0.0007 — 0.0016 in.)
   Service Limit: 0.050 mm (0.0020 in.)
   No. 3 Journal:
   Standard (New): 0.025 — 0.049 mm (0.0010 — 0.0019 in.)
   Service Limit: 0.055 mm (0.0022 in.)

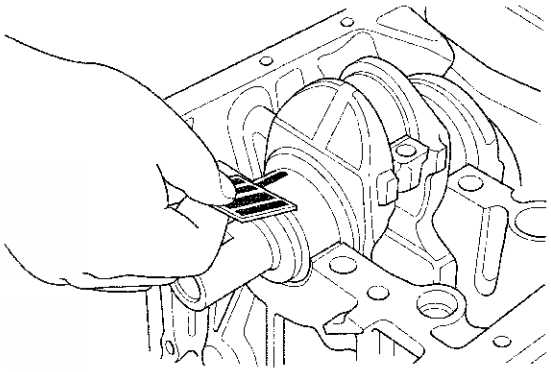

7. If the plastigage measures too wide or too narrow, remove the crankshaft, and remove the upper half of the bearing. Install a new, complete bearing with the appropriate color code(s), and recheck the clearance. Do not file, shim, or scrape the bearings or the caps to adjust clearance.

8. If the plastigage shows the clearance is still incorrect, try the next larger or smaller bearing (the color listed above or below the current one), and check again. If the proper clearance cannot be obtained by using the appropriate larger or smaller bearings, replace the crankshaft and start over.

Main Bearing Selection

Crankshaft Bore Code Location

1. Numbers, letters, or bars have been stamped on the end of the engine block as a code for the size of each of the five main journal bores. Write down the crank bore codes.
   If you cannot read the codes because of accumulated dirt and dust, do not scrub them with a wire brush or scraper. Clean them only with solvent or detergent.

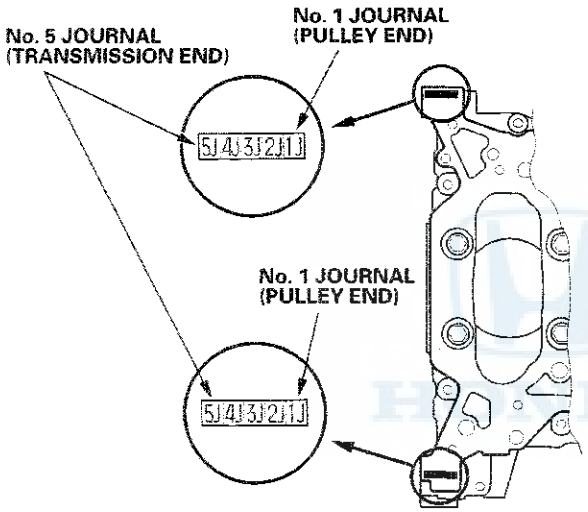

Main Journal Code Location

2. The main journal codes are stamped on the crankshaft in either location.

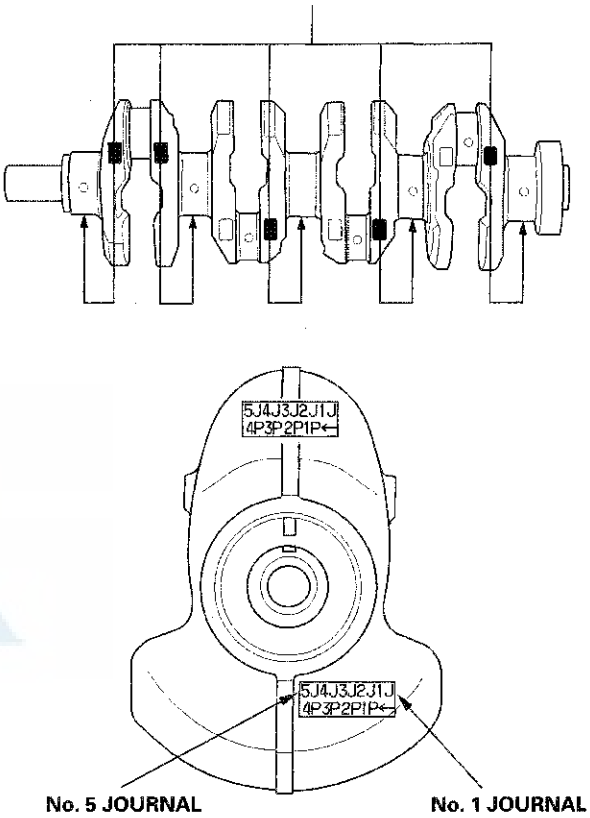

(cont'd)

Crankshaft Main Bearing Replacement (cont'd)

3. Use the crank bore codes and crank journal codes to select the appropriate replacement bearings from the following table.

K24Z2 engine

Bearing Identification
Color code is on the edge of the bearing

Smaller main journal	Larger block bore: 1 or A or I	2 or B or II	3 or C or III	4 or D or IIII
	Smaller bearing (Thicker)			
1	Pink	Pink/ Yellow	Yellow	Green
2	Pink/ Yellow	Yellow	Green	Green/ Brown
3	Yellow	Green	Green/ Brown	Brown
4	Green	Green/ Brown	Brown	Black
5	Green/ Brown	Brown	Black	Black/ Blue
6	Brown	Black	Black/ Blue	Blue

NOTE: When using bearing halves of different colors, it does not matter which color is used in the top or bottom.

K24Z3 engine

Bearing Identification
Color code is on the edge of the bearing

Smaller main journal	Larger block bore: 1 or A or I	2 or B or II	3 or C or III	4 or D or IIII
	Smaller bearing (Thicker)			
1	Red	Red/ Pink	Pink	Yellow
2	Red/ Pink	Pink	Yellow	Yellow/ Green
3	Pink	Yellow	Yellow/ Green	Green
4	Yellow	Yellow/ Green	Green	Brown
5	Yellow/ Green	Green	Brown	Brown/ Black
6	Green	Brown	Brown/ Black	Black

NOTE: When using bearing halves of different colors, it does not matter which color is used in the top or bottom.

Connecting Rod Bearing Replacement

Connecting Rod Bearing Clearance Inspection

1. Remove the oil pump (see page 8-15).

2. Remove the baffle plate (see step 8 on page 7-14).

3. Remove the connecting rod cap and the bearing half.

4. Clean the crankshaft rod journal and the bearing half with a clean shop towel.

5. Place plastigage across the rod journal.

6. Reinstall the bearing half and the cap, and tighten the bolts to 41 N·m (4.2 kgf·m, 30 lbf·ft) +120 °

   NOTE:
   - Apply new engine oil to the bolt threads and flanges.
   - Do not rotate the crankshaft during inspection.

7. Remove the rod cap and the bearing half, and measure the widest part of the plastigage.

   Connecting Rod Bearing-to-Journal Oil Clearance
   Standard (New): 0.032—0.066 mm (0.0013—0.0026 in.)
   Service Limit: 0.077 mm (0.0030 in.)

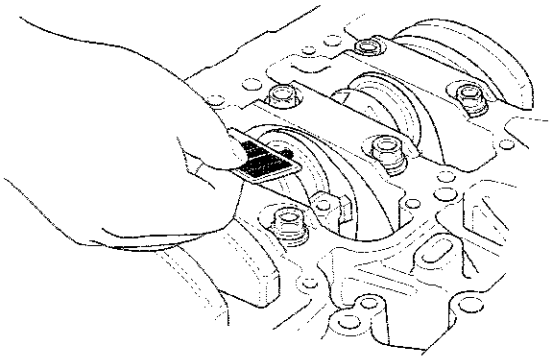

8. If the plastigage measures too wide or too narrow, remove the cap, and the upper half of the bearing, install a new, complete bearing with the appropriate color code(s), and recheck the clearance. Do not file, shim, or scrape the bearings or the caps to adjust clearance.

9. If the plastigage shows the clearance is still incorrect, try the next larger or smaller bearing (the color listed above or below the current one), and check clearance again. If the proper clearance cannot be obtained by using the appropriate larger or smaller bearing, replace the crankshaft and start over.

(cont'd)

Connecting Rod Bearing Replacement (cont'd)

Connecting Rod Bearing Selection

1. Inspect each connecting rod for cracks and heat damage.

Connecting Rod Big End Bore Code Locations

2. Each connecting rod has a tolerance range from 0 to 0.024 mm (0.0009 in.), in 0.006 mm (0.0002 in.) increments, depending on the size of its big end bore. It is then stamped with a number or bar (1, 2, 3, or 4/I, II, III, or IIII) indicating the range. You may find any combination of numbers and bars in any engine. (Half the number or bar is stamped on the bearing cap, the other half is on the rod.)
   If you cannot read the code because of an accumulation of oil and varnish, do not scrub it with a wire brush or scraper. Clean it only with solvent or detergent.

   Normal Bore Size: 51.0 mm (2.01 in.)

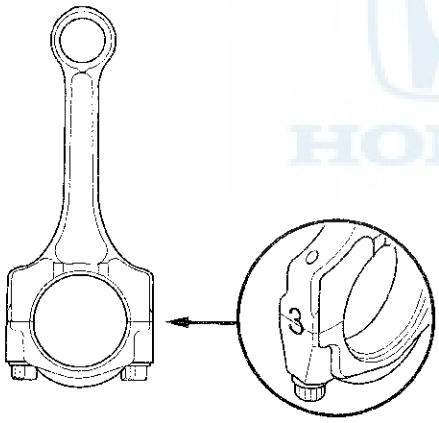

Connecting Rod Journal Code Location

3. The connecting rod journal codes are stamped on the crankshaft in either location.

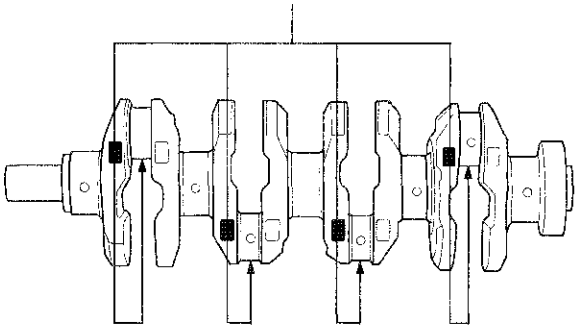

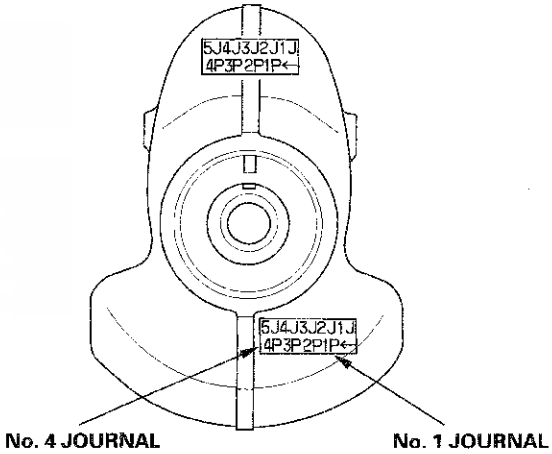

4. Use the big end bore codes and rod journal codes to select appropriate replacement bearings from the following table.

Bearing Identification
Color code is on the edge of the bearing

Smaller rod journal	Larger big end bore: 1 or I	2 or II	3 or III	4 or IIII
	Smaller bearing (Thicker)			
A	Red	Pink	Pink/ Yellow	Yellow
B	Pink	Yellow	Yellow/ Green	Green
C	Yellow	Green	Green/ Brown	Brown
D	Green	Brown	Brown/ Black	Black

NOTE: When using bearing halves of different colors, it does not matter which color is used in the top or bottom.

Oil Pan Removal

1. If the engine is already out of the vehicle, go to step 19.
2. Remove the strut brace (if equipped) (see page 20-289).
3. Do the battery removal procedure (see page 22-90).
4. Remove the air cleaner assembly (see page 11-359).
5. Remove the harness clamps, then remove the battery base (see step 8 on page 5-3).
6. Remove the front engine mount stop (A), then remove the front engine mount bolt (B).

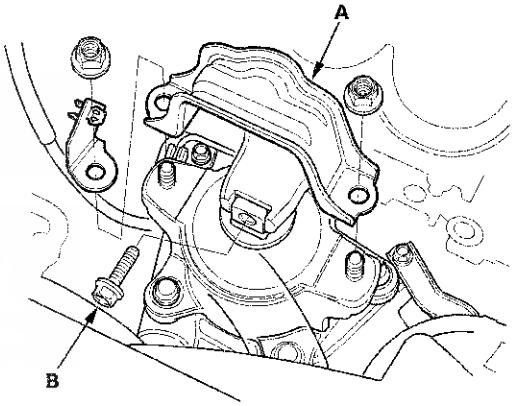

(cont'd)

Oil Pan Removal (cont'd)

7. Loosen the rear engine mount mounting bolts (A).

M/T model

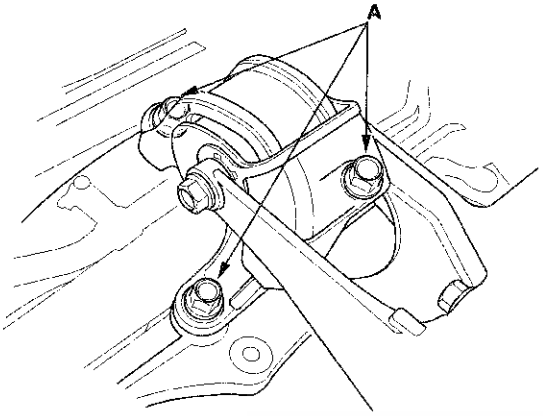

A/T model

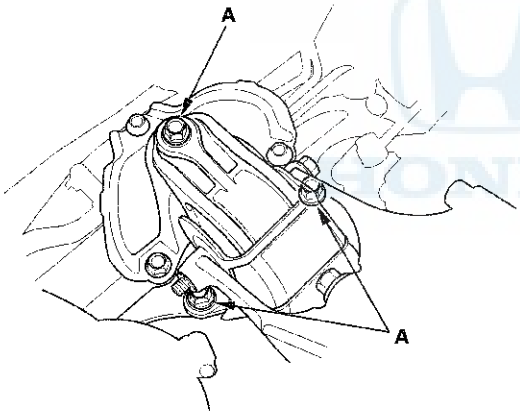

8. Loosen the upper transmission mount bracket mounting bolts (A).

M/T model

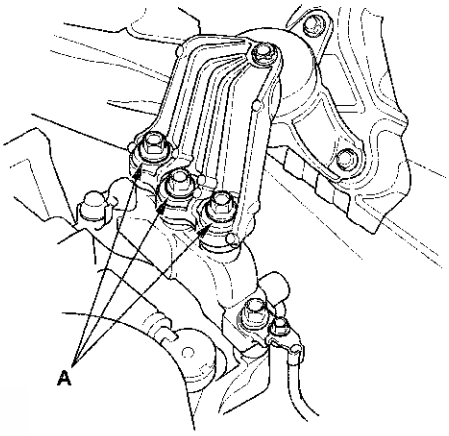

A/T model

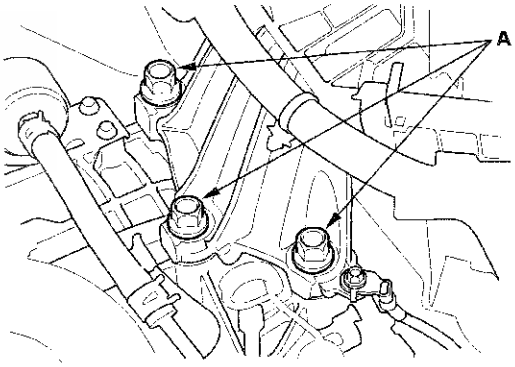

9. Raise the vehicle on the lift.

10. Remove the left front wheel.

11. Remove the splash shield (see step 25 on page 5-5).

12. Drain the engine oil (see page 8-9).

13. Separate the left side knuckle from the lower arm (see step 5 on page 18-21).

14. Remove the left side damper fork (see step 3 on page 18-21).

15. Remove the left side driveshaft (see page 16-4). Coat all precision-finished surface with new engine oil. Tie a plastic bag over the driveshaft end.

16. Remove the nuts securing the lower transmission mount (see step 49 on page 5-9).

17. A/T model: Remove the shift cable bracket.

    - Saitama Factory produced models (see step 44 on page 14-238).
    - Marysville, Ohio Factory produced models (see step 46 on page 14-239).

18. Use a transmission jack to lift the transmission 30—40 mm (1.2—1.6 in.).

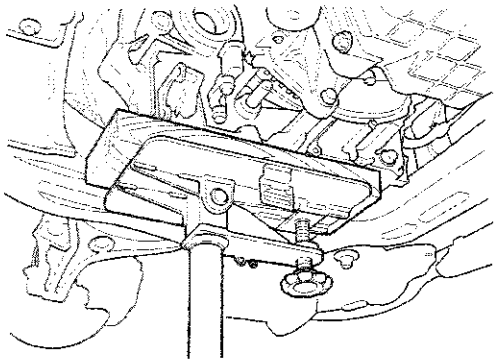

19. Remove the clutch/torque converter cover (A), and remove the two bolts securing the transmission.

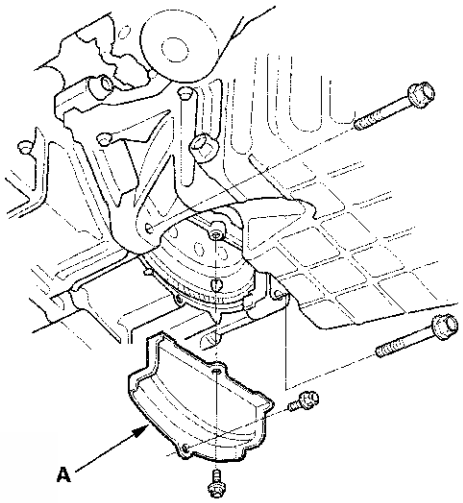

20. Remove the bolts securing the oil pan.

21. Using a flat blade screwdriver, separate the oil pan from the engine block in the places shown.

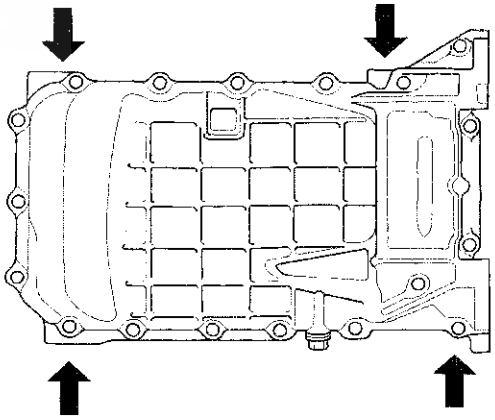

22. Remove the oil pan.

Crankshaft and Piston Removal

1. Remove the engine/transmission (see page 5-3).
2. Remove the transmission:
   - Manual transmission (see page 13-7)
   - Automatic transmission (see page 14-232)
3. M/T model: Remove the flywheel (see step 17 on page 12-19).
4. A/T model: Remove the drive plate (see page 14-257).
5. Remove the oil pan (see page 7-11).
6. Remove the oil pump (see page 8-15).
7. Remove the cylinder head:
   - All models except PZEV (see page 6-27)
   - PZEV model (see page 6-76)
8. Remove the baffle plate.

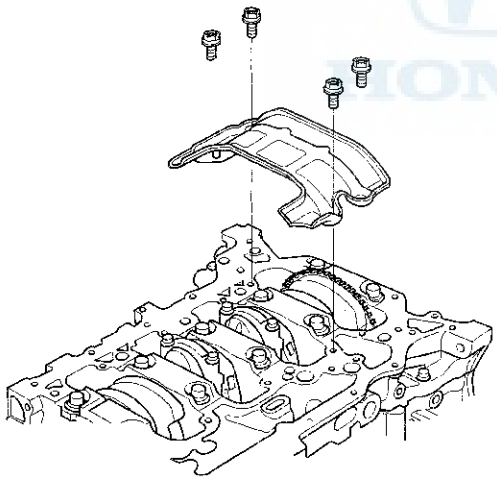

9. Remove the 8 mm bolts.

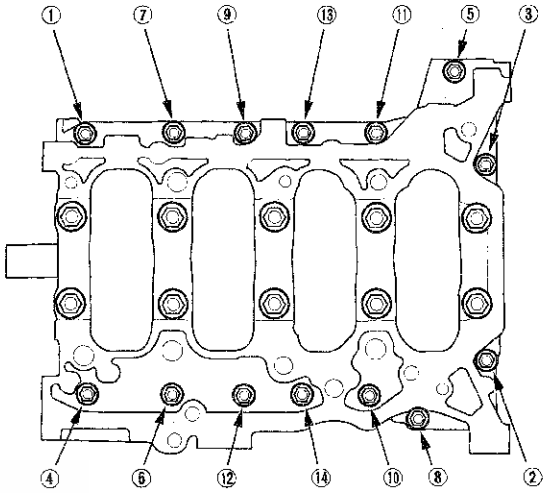

10. Remove the bearing cap bolts. To prevent warpage, loosen the bolts in sequence 1/3 turn at a time; repeat the sequence until all bolts are loosened.

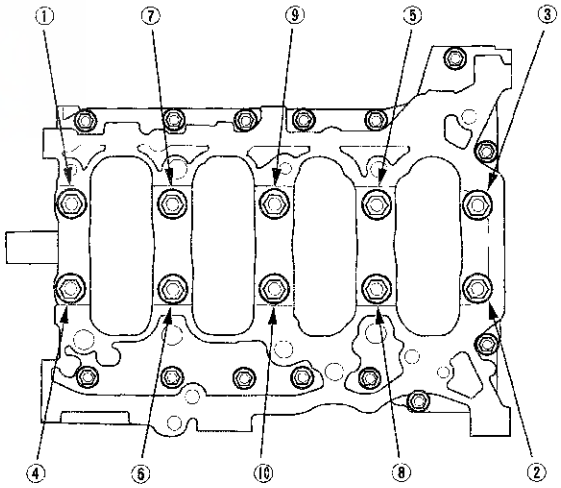

11. Remove the lower block and the bearings. Keep all the bearings in order.

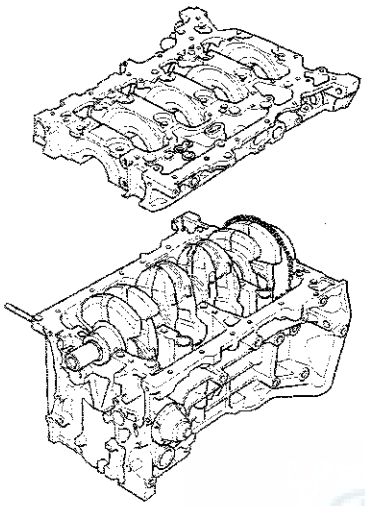

12. Remove the rod caps/bearings. Keep all the caps/bearings in order.

13. Lift the crankshaft out of the engine. Be careful not to damage the journals and the CKP pulse plate.

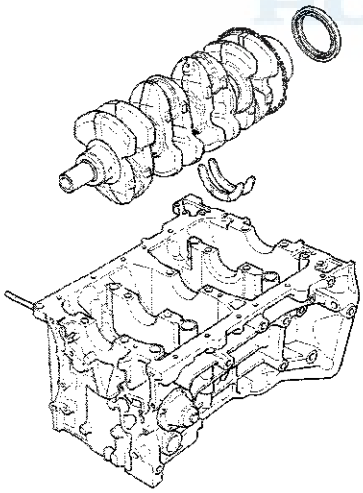

14. Remove the CKP pulse plate from the crankshaft (see page 7-30).

15. Remove the upper bearing halves from the connecting rods, and set them aside with their respective caps.

16. If you can feel a ridge of metal or hard carbon around the top of each cylinder, remove it with a ridge reamer (A). Follow the reamer manufacturer's instructions. If the ridge is not removed, it may damage the pistons as they are pushed out.

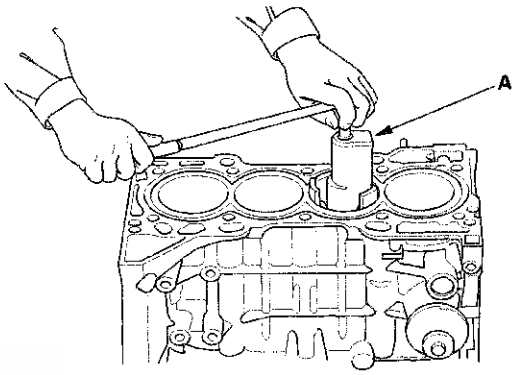

17. Use the wooden handle of a hammer (A) to drive out the piston/connecting rod assembly (B).

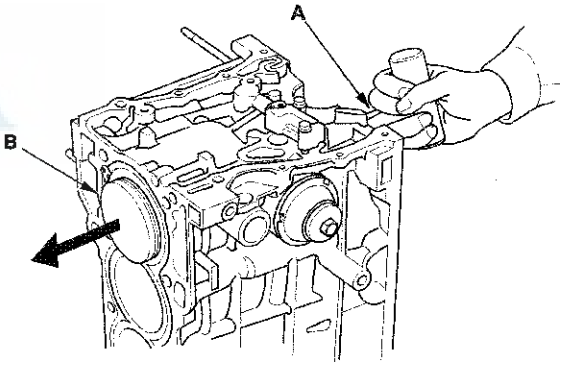

18. Reinstall the lower block and the bearings on the engine block in the proper order.

19. Reinstall the connecting rod bearings and the caps after removing each piston/connecting rod assembly.

20. Mark each piston/connecting rod assembly with its cylinder number to make sure they are reinstalled in the original order.

    NOTE: The existing number on the connecting rod does not indicate its position in the engine, it indicates the rod bore size.

Crankshaft Inspection

Out-of-Round and Taper

1. Remove the crankshaft from the engine block (see page 7-14).
2. Remove the CKP pulse plate from the crankshaft (see page 7-30).
3. Clean the crankshaft oil passages with pipe cleaners or a suitable brush.
4. Clean the keyway and threads, and check for damage.
5. Measure the out-of-round at the middle of each rod and the main journal in two places. The difference between measurements on each journal must not be more than the service limit.

   Journal Out-of-Round
   Standard (New): 0.004 mm (0.0002 in.) max.
   Service Limit: 0.010 mm (0.0004 in.)

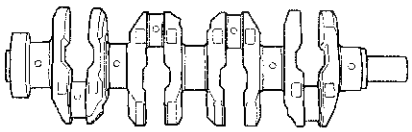

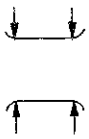

6. Measure the taper at the edges of each rod and the main journal. The difference between measurements on each journal must not be more than the service limit.

   Journal Taper
   Standard (New): 0.005 mm (0.0002 in.) max.
   Service Limit: 0.010 mm (0.0004 in.)

Straightness

7. Place the V-blocks on a flat surface.
8. Check the total runout with the crankshaft supported on V-blocks.
9. Measure the runout on all main journals. Rotate the crankshaft two complete revolutions. The difference between measurements on each journal must not be more than the service limit.

   Crankshaft Total Runout
   Standard (New): 0.03 mm (0.0012 in.) max.
   Service Limit: 0.04 mm (0.0016 in.)

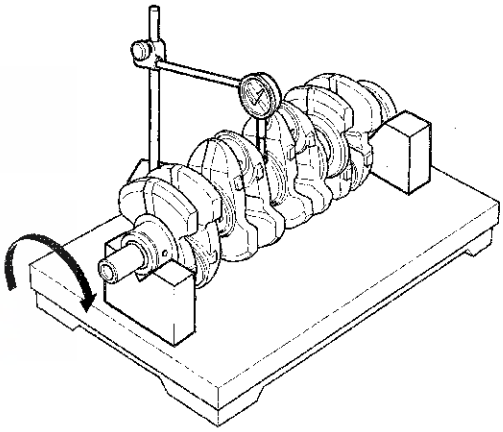

Block and Piston Inspection

1. Remove the crankshaft and the pistons (see page 7-14).

2. Check the piston for distortion or cracks.

3. Measure the piston diameter at a point 13 mm (0.5 in.) from the bottom of the skirt. There are two standard-size pistons (No Letter or A, and B). The letter is stamped on the top of the piston. Letters are also stamped on the engine block as the cylinder bore sizes.

   Piston Skirt Diameter
   Standard (New):
   No Letter (or A): 86.980—86.990 mm (3.4244—3.4248 in.)
   B: 86.970—86.980 mm (3.4240—3.4244 in.)
   Service Limit:
   No Letter (or A): 86.930 mm (3.4224 in.)
   B: 86.920 mm (3.4220 in.)

   Oversize Piston Skirt Diameter
   0.25: 87.230—87.240 mm (3.4342—3.4346 in.)

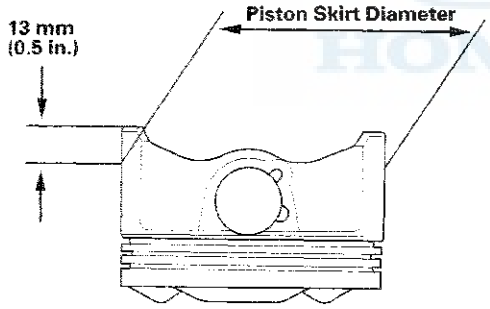

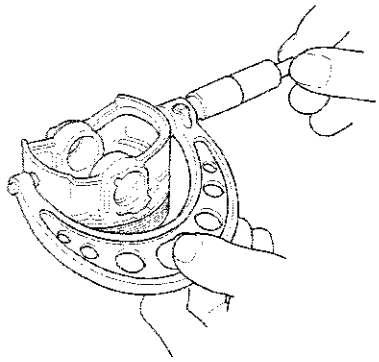

4. Measure the wear and taper in direction X and Y at three levels inside each cylinder as shown. If the measurements in any cylinder are beyond the Oversize Bore Service Limit, replace the engine block. If the engine block is being rebored, refer to step 7 after reboring.

   Cylinder Bore Size
   Standard (New):
   A or I: 87.010—87.020 mm (3.4256—3.4260 in.)
   B or II: 87.000—87.010 mm (3.4252—3.4256 in.)
   Service Limit: 87.070 mm (3.4279 in.)

   Oversize Bore
   0.25: 87.250—87.260 mm (3.4350—3.4354 in.)

   Reboring Limit: 0.25 mm (0.01 in.) max.

   Bore Taper
   Limit (Difference between first and third measurement): 0.02 mm (0.0008 in.)

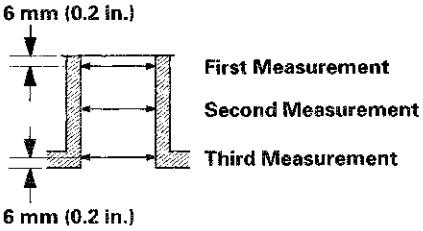

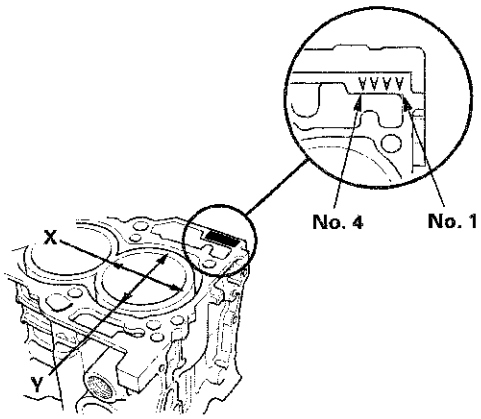

(cont'd)

Block and Piston Inspection (cont'd)

5. Scored or scratched cylinder bores must be honed.

6. Check the top of the engine block for warpage. Measure along the edges and across the center as shown.

   Engine Block Warpage
   Standard (New): 0.07 mm (0.003 in.) max.
   Service Limit: 0.10 mm (0.004 in.)

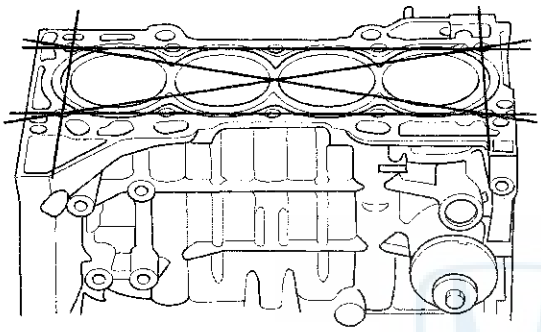

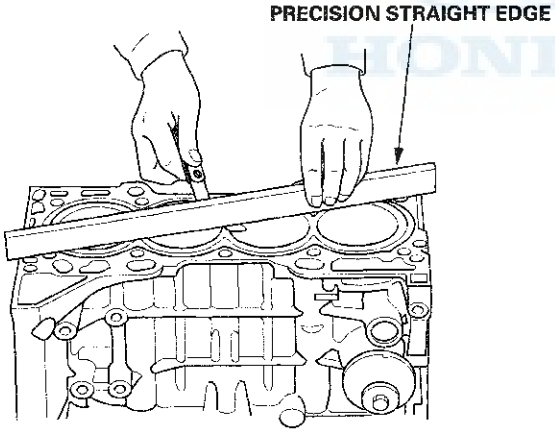

7. Calculate the difference between the cylinder bore diameter and the piston diameter. If the clearance is near or exceeds the service limit, inspect the piston and cylinder bore for excessive wear.

   Piston-to-Cylinder Bore Clearance
   Standard (New): 0.020—0.040 mm (0.0008—0.0016 in.)
   Service Limit: 0.05 mm (0.002 in.)

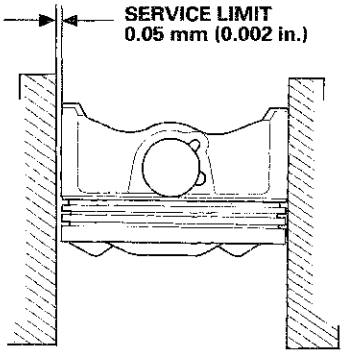

Cylinder Bore Honing

Only a scored or scratched cylinder bore must be honed.

1. Measure the cylinder bores (see page 7-17). If the engine block is to be reused, hone the cylinders, and remeasure the bores.

2. Remove the oil jets (see page 8-13).

3. Hone the cylinder bores with honing oil and a fine (400 grit) stone in a 60 degree cross-hatch pattern (A). Use only a rigid hone with 400 grit or finer stone such as Sunnen, Ammco, or equivalent. Do not use stones that are worn or broken.

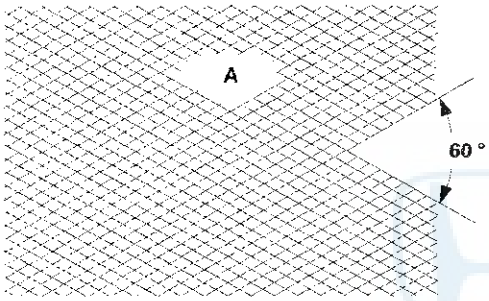

4. When honing is complete, thoroughly clean the engine block of all metal particles. Wash the cylinder bores with hot soapy water, then dry and oil them immediately to prevent rusting. Never use solvent, it will only redistribute the grit on the cylinder walls.

5. If scoring or scratches are still present in the cylinder bores after honing the engine block to the service limit, rebore the engine block. Some light vertical scoring and scratching is acceptable if it is not deep enough to catch your fingernail, and does not run the full length of the bore.

6. Install the oil jets (see page 8-13).

Piston, Pin, and Connecting Rod Replacement

Disassembly

1. Remove the piston from the engine block (see page 7-14).

2. Apply new engine oil to the piston pin snap rings (A), and turn them in the ring grooves until the end gaps are lined up with the cutouts in the piston pin bores (B).

   NOTE: Take care not to damage the ring grooves.

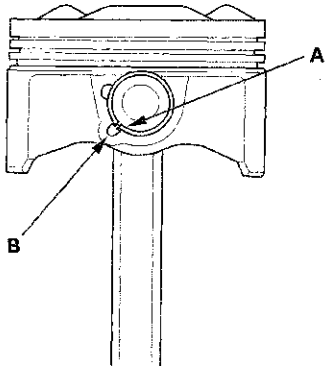

3. Remove both snap rings. Start at the cutout in the piston pin bore. Remove the snap rings carefully so they do not go flying or get lost. Wear eye protection.

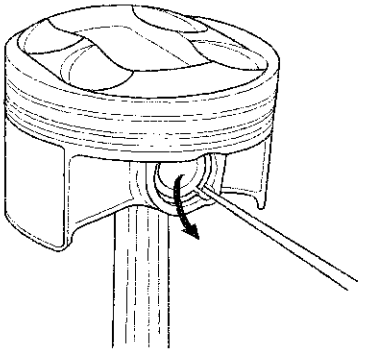

(cont'd)

Piston, Pin, and Connecting Rod Replacement (cont'd)

4. Heat the piston and the connecting rod assembly to about 158 °F (70 °C), then remove the piston pin.

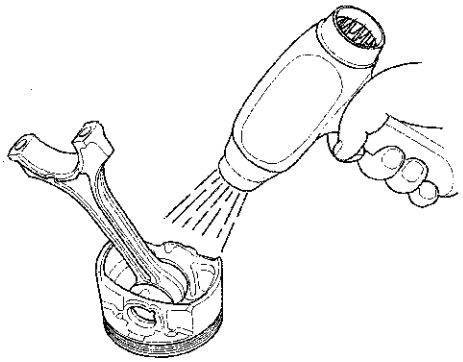

Inspection

NOTE: Inspect the piston, the piston pin, and the connecting rod when they are at room temperature.

1. Measure the diameter of the piston pin.

Piston Pin Diameter
Standard (New): 21.961—21.965 mm (0.8646—0.8648 in.)
Service Limit: 21.953 mm (0.8643 in.)

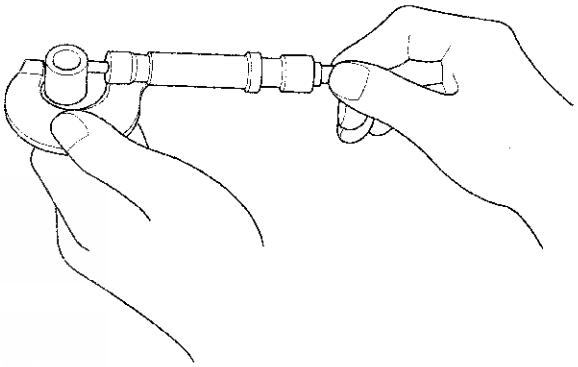

2. Zero the dial indicator to the piston pin diameter.

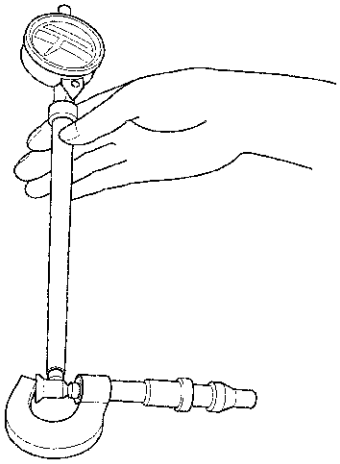

3. Check the difference between the piston pin diameter and the piston pin hole diameter in the piston.

Piston Pin-to-Piston Clearance
Standard (New): −0.005 to +0.002 mm (−0.00020 to +0.00008 in.)
Service Limit: 0.005 mm (0.0002 in.)

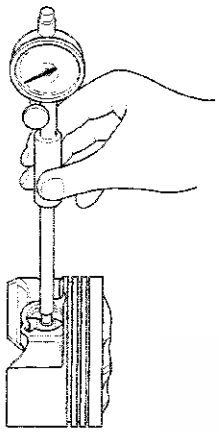

4. Measure the piston pin-to-connecting rod clearance.

Piston Pin-to-Connecting Rod Clearance
Standard (New): 0.005−0.015 mm (0.0002−0.0006 in.)
Service Limit: 0.02 mm (0.0008 in.)

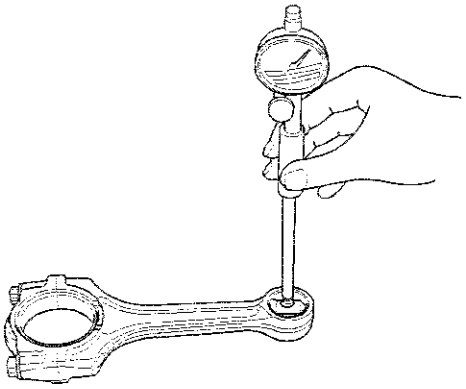

Reassembly

1. Install a piston pin snap ring (A).

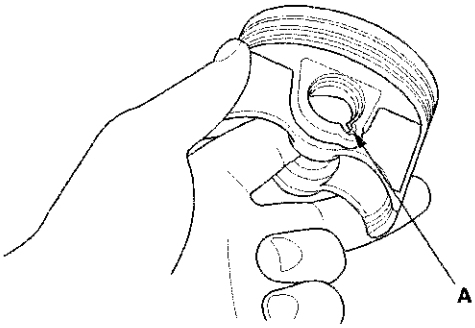

2. Coat the piston pin bore in the piston, the bore in the connecting rod, and the piston pin with new engine oil.

3. Heat the piston to about 158 °F (70 °C).

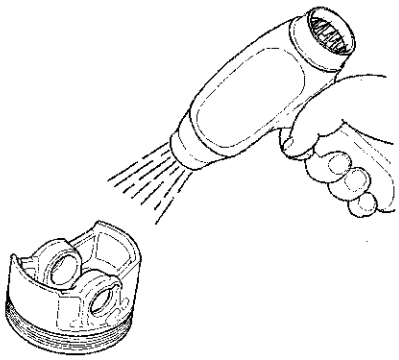

(cont'd)

Piston, Pin, and Connecting Rod Replacement (cont'd)

4. Assemble the piston (A) and the connecting rod (B) with the arrow (C) and the embossed mark (D) on the same side. Install the piston pin (E).

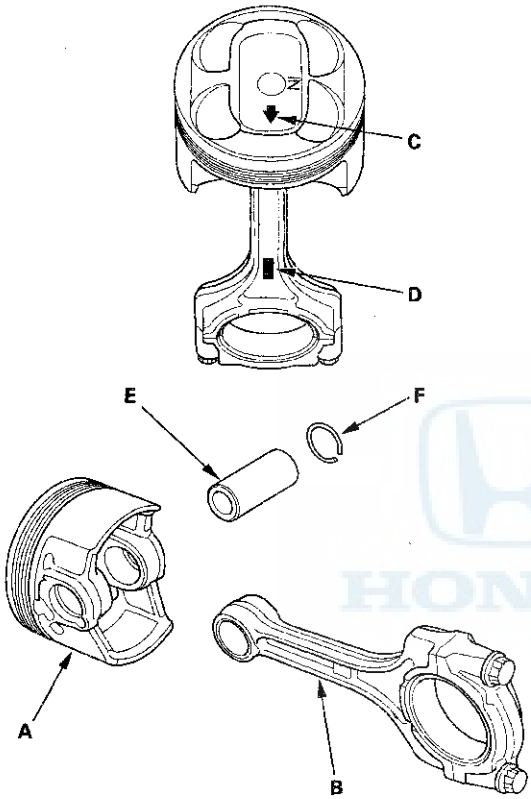

5. Install the remaining snap ring (F).

6. Turn the snap rings in the ring grooves until the end gaps are positioned at the bottom of the piston.

Piston Ring Replacement

1. Remove the piston from the engine block (see page 7-14).

2. Using a ring expander (A), remove the old piston rings (B).

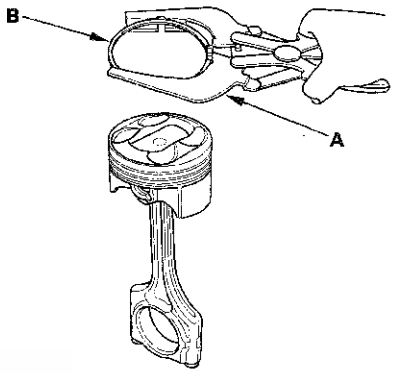

3. Clean all ring grooves thoroughly with a squared-off broken ring or ring groove cleaner with a blade to fit the piston grooves.
   The top and 2nd ring grooves are 1.2 mm (0.05 in.) wide. The oil ring groove is 2.0 mm (0.08 in.) wide. File down a blade if necessary.
   Do not use a wire brush to clean the ring grooves, or cut the ring grooves deeper with the cleaning tools.

   NOTE: If the piston is to be separated from the connecting rod, do not install the new rings yet.

4. Using a piston that has its rings removed, push a new ring (A) into the cylinder bore 15—20 mm (0.6—0.8 in.) from the bottom.

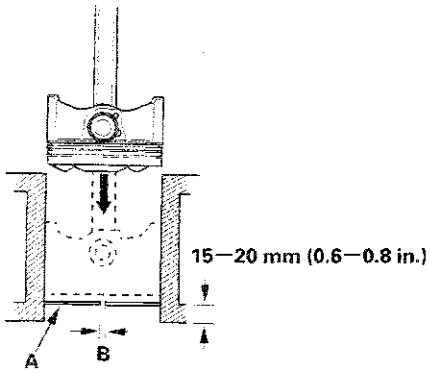

5. Measure the piston ring end-gap (B) with a feeler gauge:

   - If the gap is too small, check to see if you have the proper rings for your engine.
   - If the gap is too large, recheck the cylinder bore diameter against the wear limits (see page 7-17). If the bore is beyond the service limit, the engine block must be rebored.

Piston Ring End-Gap

Top Ring:
Standard (New): 0.20—0.35 mm (0.008—0.014 in.)
Service Limit: 0.60 mm (0.024 in.)

Second Ring:
Standard (New): 0.50—0.65 mm (0.020—0.026 in.)
Service Limit: 0.70 mm (0.028 in.)

Oil Ring:
Standard (New): 0.20—0.70 mm (0.008—0.028 in.)
Service Limit: 0.75 mm (0.030 in.)

6. Install the top ring and the second ring as shown. The top ring (A) has a 1R mark, and the second ring (B) has a 2RN mark. The manufacturing marks (C) must face upward.

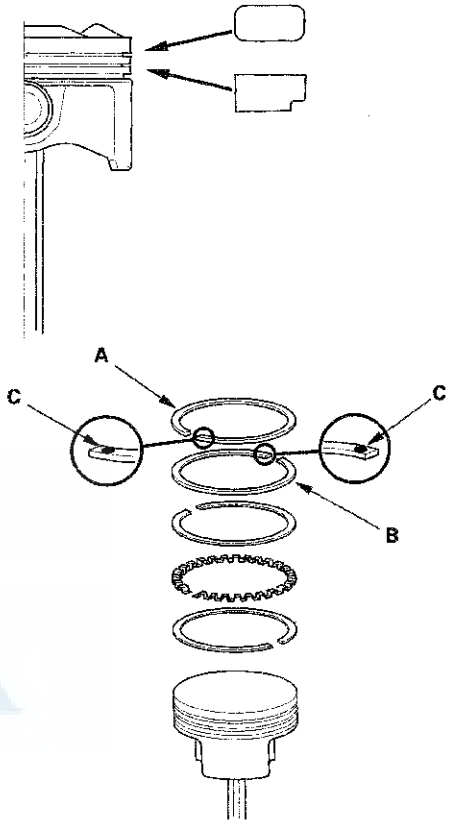

Piston Ring Dimensions

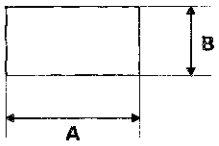

Top Ring (Standard):
A: 2.7 mm (0.11 in.)
B: 1.2 mm (0.05 in.)

Second Ring (Standard):
A: 3.4 mm (0.13 in.)
B: 1.2 mm (0.05 in.)

(cont'd)

Piston Ring Replacement (cont'd)

7. After installing a new set of rings, measure the ring-to-groove clearances:

   Top Ring Clearance
   Standard (New): 0.060—0.085 mm (0.0024—0.0033 in.)
   Service Limit: 0.13 mm (0.005 in.)

   Second Ring Clearance
   Standard (New): 0.040—0.065 mm (0.0016—0.0026 in.)
   Service Limit: 0.13 mm (0.005 in.)

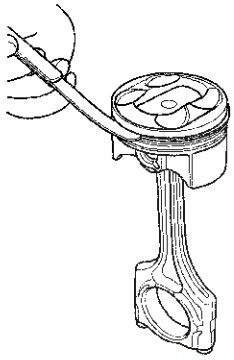

8. Rotate the rings in their grooves to make sure they do not bind.

9. Position the ring end gaps as shown:

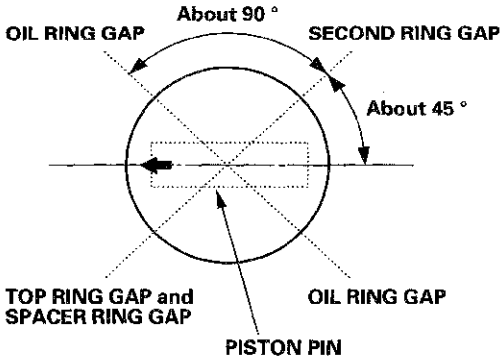

Piston Installation

If the Crankshaft is Already Installed

1. Set the crankshaft to bottom dead center (BDC) for each cylinder as its piston is installed.

2. Remove the connecting rod caps, then install the ring compressor. Check that the bearing is securely in place.

3. Apply new engine oil to the piston, the inside of the ring compressor, and the cylinder bore, then attach the ring compressor to the piston/connecting rod assembly.

4. Position the mark (A) to face the cam chain side of the engine block.

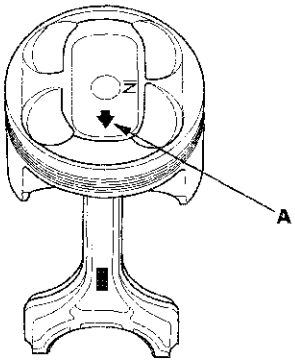

5. Position the piston in the cylinder, and tap it in using the wooden handle of a hammer (A). Push down on the ring compressor (B) to prevent the rings from expanding before entering the cylinder bore.

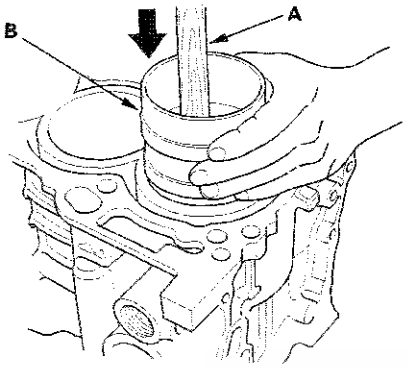

6. Stop after the ring compressor pops free, and check the connecting rod-to-rod journal alignment before pushing the piston into place.

7. Check the connecting rod bearing clearance with plastigage (see page 7-9).

8. Inspect the connecting rod bolts (see page 7-26).

9. Apply new engine oil to the bolt threads, then install the connecting rod caps with bearings. Tighten the bolts to 41 N·m (4.2 kgf·m, 30 lbf·ft).

10. Tighten the connecting rod bolts an additional 120 °.

    NOTE: Remove the connecting rod bolt if you tightened it beyond the specified angle, and go back to step 8 of the procedure. Do not loosen it back to the specified angle.

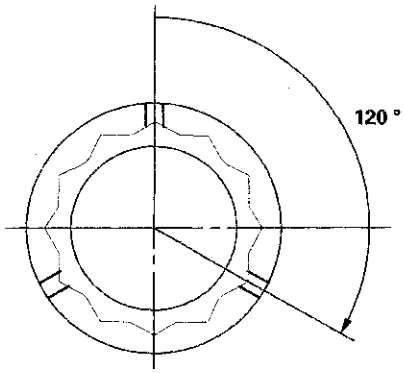

(cont'd)

Piston Installation (cont'd)

If the Crankshaft is Not Installed

1. Remove the connecting rod caps, then install the ring compressor, and check that the bearing is securely in place.

2. Apply new engine oil to the piston, the inside of the ring compressor, and the cylinder bore, then attach the ring compressor to the piston/connecting rod assembly.

3. Position the mark (A) to face the cam chain side of the engine block.

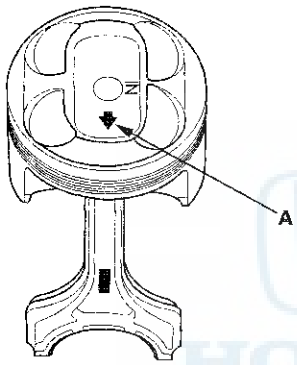

4. Position the piston in the cylinder, and tap it in using the wooden handle of a hammer (A). Push down on the ring compressor (B) to prevent the rings from expanding before entering the cylinder bore.

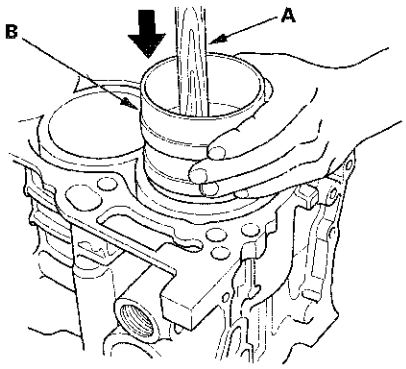

5. Position all pistons at top dead center (TDC).

Connecting Rod Bolt Inspection

1. Measure the diameter of each connecting rod bolt at point A and point B.

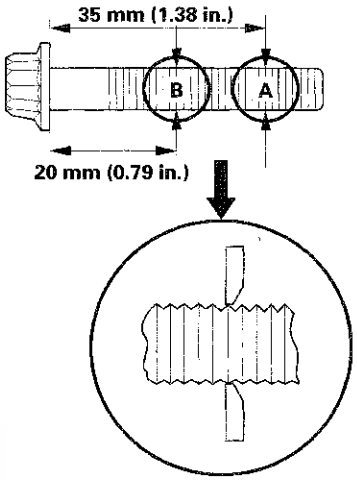

2. Calculate the difference in diameter between point A and point B.

   Point A—Point B = Difference in Diameter

   Difference in Diameter
   Specification: 0—0.1 mm (0—0.004 in.)

3. If the difference in diameter is out of specification, replace the connecting rod bolt.

Crankshaft Installation

Special Tools Required
- Driver 07749-0010000
- Attachment, 24 x 26 mm 07746-0010700
- Oil seal driver attachment 96 07ZAD-PNAA100

1. M/T model: Install the crankshaft end bushing when replacing the crankshaft. Using the driver and the attachment, 24 x 26 mm, drive in the crankshaft end bushing until the driver and the attachment bottom against the crankshaft.

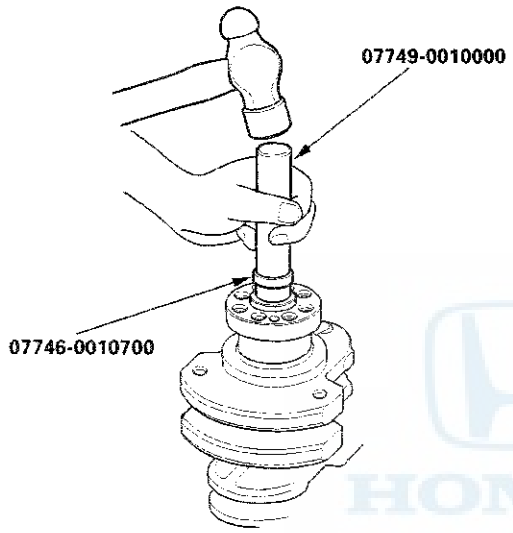

2. Check the connecting rod bearing clearance with plastigage (see page 7-9).

3. Check the main bearing clearance with plastigage (see page 7-6).

4. Install the bearing halves in the engine block and the connecting rods.

5. Apply a coat of new engine oil to the main bearings and the rod bearings.

6. Install the CKP pulse plate to the crankshaft (see page 7-30).

7. Hold the crankshaft so rod journal No. 2 and rod journal No. 3 are straight up, and lower the crankshaft into the engine block. Be careful not to damage the journals and the CKP pulse plate.

8. Apply new engine oil to the thrust washer surfaces. Install the thrust washers (A) in the No. 4 journal of the engine block.

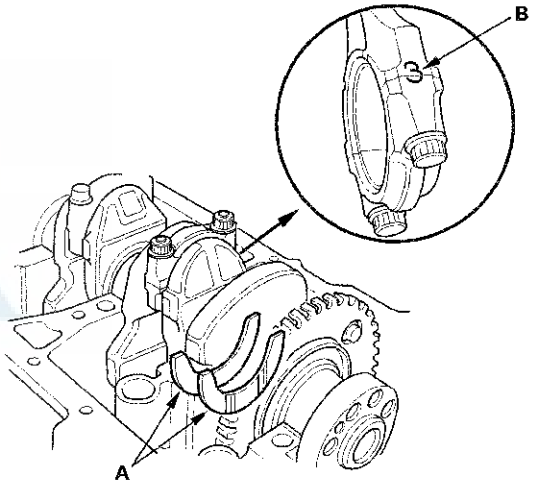

9. Inspect the connecting rod bolts (see page 7-26).

10. Apply new engine oil to the threads of the connecting rod bolts.

11. Seat the rod journals into connecting rod No. 1 and connecting rod No. 4. Line up the mark (B) on the connecting rod and the cap, then install the caps and bolts finger-tight.

12. Rotate the crankshaft clockwise, and seat the journals into connecting rod No. 2 and connecting rod No. 3. Line up the mark on the connecting rod and the cap, then install the caps and bolts finger-tight.

(cont'd)

Crankshaft Installation (cont'd)

13. Tighten the connecting rod bolts to 41 N·m (4.2 kgf·m, 30 lbf·ft).

14. Tighten the connecting rod bolts an additional 120 °.

    NOTE: Remove the connecting rod bolt if you tightened it beyond the specified angle, and go back to step 9 of the procedure. Do not loosen it back to the specified angle.

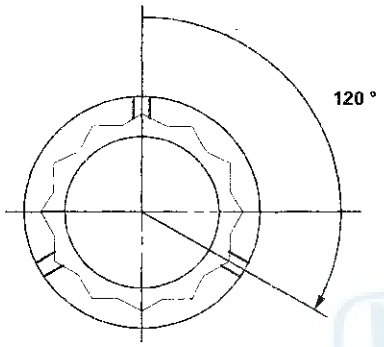

15. Remove all of the old liquid gasket from the lower block mating surfaces, the bolts, and the bolt holes.

16. Clean and dry the lower block mating surfaces.

17. Apply liquid gasket, P/N 08717-0004, 08718-0001, 08718-0003, or 08718-0009, evenly to the engine block mating surface of the lower block, and to the inside edge of the threaded bolt holes. Install the component within 5 minutes of applying the liquid gasket.

    NOTE:
    - If you apply liquid gasket P/N 08718-0012, the component must be installed within 4 minutes.
    - If too much time has passed after applying the liquid gasket, remove the old liquid gasket and residue, then reapply new liquid gasket.

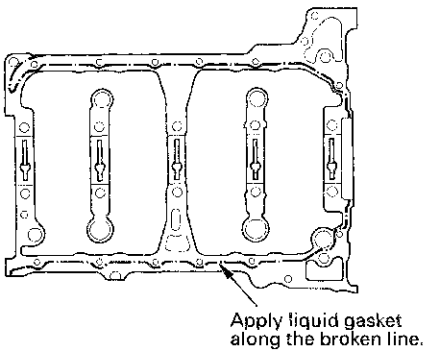

18. Put the lower block on the engine block.

19. Apply new engine oil to the threads of the bearing cap bolts. Tighten the bearing cap bolts in sequence, to 29 N·m (3.0 kgf·m, 22 lbf·ft).

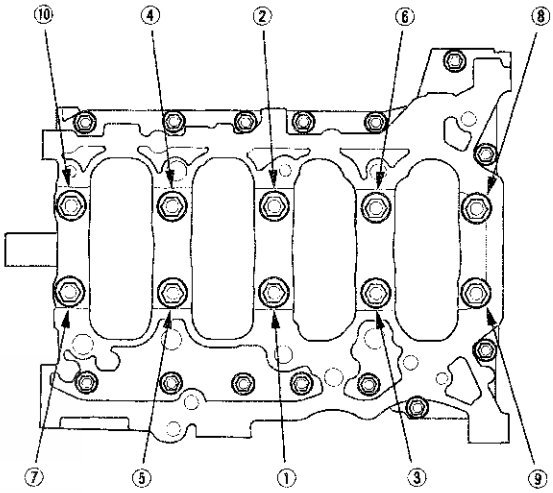

20. Tighten the bearing cap bolts an additional 48 °.

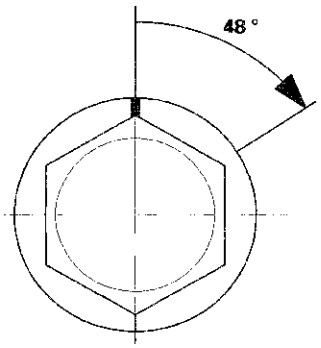

21. Tighten the 8 mm bolts in sequence to 22 N·m (2.2 kgf·m, 16 lbf·ft).

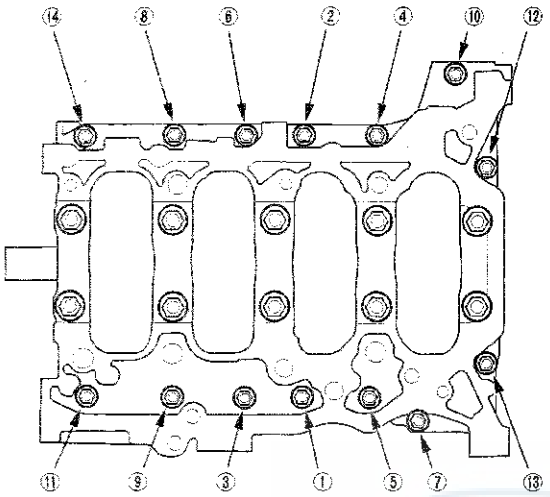

22. Apply a light coat of new engine oil around the crankshaft oil seal.

23. Apply a light coat of new engine oil to the lip of the crankshaft oil seal.

24. Use the driver and the oil seal driver attachment 96 to drive a new crankshaft oil seal squarely into the engine block to the specified installed height.

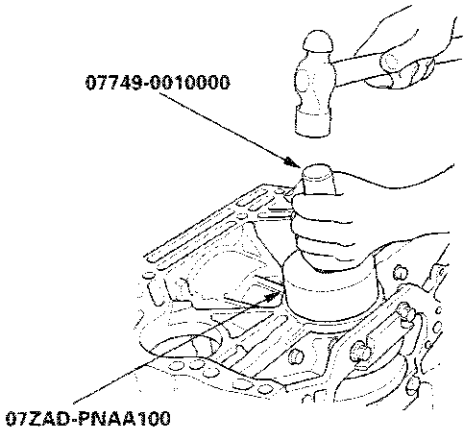

25. Measure the distance between the engine block (A) and the crankshaft oil seal (B).

Crankshaft Oil Seal Installed Height:
0.2—1.2 mm (0.008—0.047 in.)

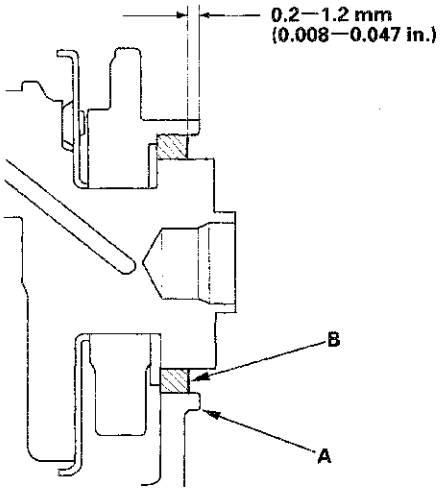

26. Install the baffle plate.

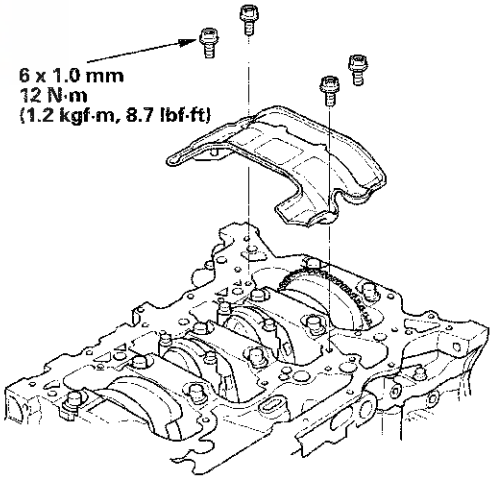

(cont'd)

Crankshaft Installation (cont'd)

27. Install the oil pump (see page 8-21).

28. Install the oil pan (see page 7-31).

29. Install the cylinder head:

    - All models except PZEV (see page 6-44)
    - PZEV model (see page 6-94)

30. M/T model: Install the flywheel (see step 18 on page 12-19), the clutch disc (see step 26 on page 12-20), and the pressure plate (see step 27 on page 12-20).

31. A/T model: Install the drive plate (see page 14-257).

32. Install the transmission:

    - Manual transmission (see page 13-16)
    - Automatic transmission (see page 14-243)

33. Install the engine/transmission (see page 5-12).

    NOTE: Whenever any crankshaft or connecting rod bearing is replaced, run the engine at idle until it reaches normal operating temperature, then continue to run it for about 15 minutes.

CKP Pulse Plate Replacement

1. Remove the crankshaft from the engine block (see page 7-14).

2. Remove the CKP pulse plate (A) from the crankshaft.

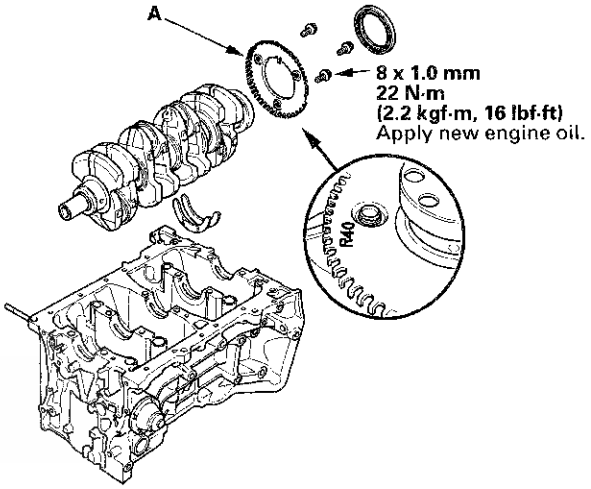

3. Install the CKP pulse plate in the reverse order of removal.

Oil Pan Installation

1. Remove all of the old liquid gasket from the oil pan mating surfaces, the bolts, and the bolt holes.

2. Clean and dry the oil pan mating surfaces.

3. Apply liquid gasket, P/N 08717-0004, 08718-0001, 08718-0003, or 08718-0009, evenly to the engine block mating surface of the oil pan, and to the inside edge of the threaded bolt holes. Install the component within 5 minutes of applying the liquid gasket.

   NOTE:
   - If you apply liquid gasket P/N 08718-0012, the component must be installed within 4 minutes.
   - If too much time has passed after applying the liquid gasket, remove the old liquid gasket and residue, then reapply new liquid gasket.

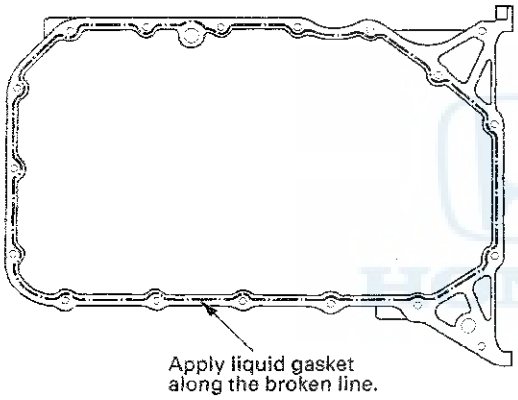

4. Install the oil pan.

5. Tighten the bolts in three steps. In the final step, tighten all bolts, in sequence, to 12 N·m (1.2 kgf·m, 8.7 lbf·ft). Wipe off the excess liquid gasket on the each side of crankshaft pulley and the flywheel/drive plate.

   NOTE:
   - Wait at least 30 minutes before filling the engine with oil.
   - Do not run the engine for at least 3 hours after installing the oil pan.

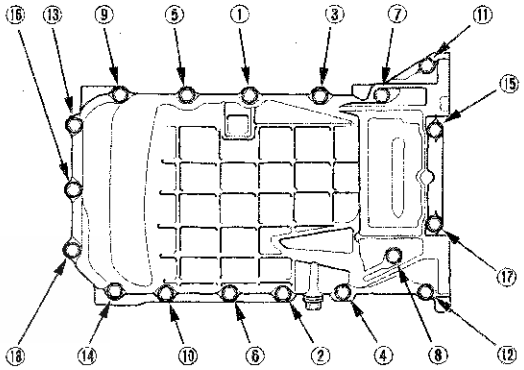

6. Install the clutch/torque converter cover (A), and install the two bolts securing the transmission.

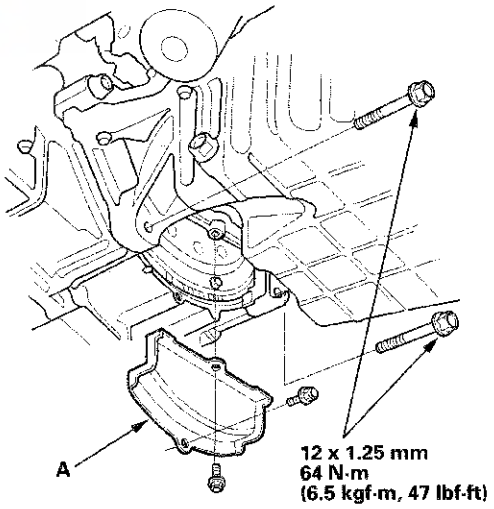

(cont'd)

Oil Pan Installation (cont'd)

7. If the engine is still in the vehicle, do steps 8 through 24.

8. Lower the transmission jack from the transmission.

9. A/T model: Install the shift cable bracket.

   - Saitama Factory produced models (see step 33 on page 14-248).
   - Marysville, Ohio Factory produced models (see step 36 on page 14-249).

10. Tighten the nuts securing the lower transmission mount (see step 25 on page 5-16).

11. Install a new set ring on the end of driveshaft, then install the driveshaft (see page 16-20). Make sure the ring "clicks" into place in the differential.

12. Install the left side damper fork (see step 3 on page 18-21).

13. Connect the lower arm to the left side knuckle (see step 5 on page 18-21).

14. Install the splash shield (see step 48 on page 5-20).

15. Install the left front wheel.

16. Lower the vehicle on the lift.

17. Tighten the upper transmission mount bracket mounting bolts to the specified torque.

M/T model

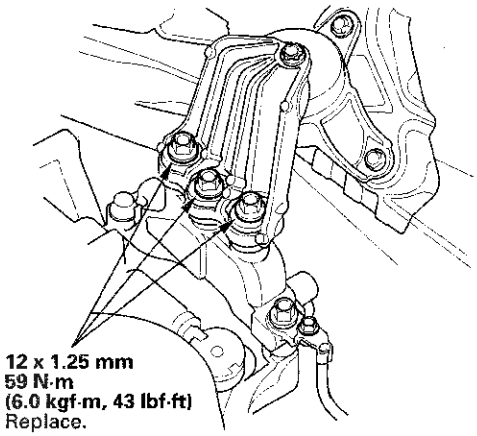

A/T model

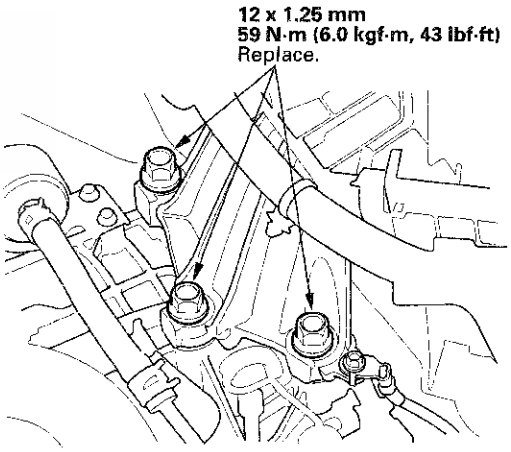

18. Tighten the rear engine mount mounting bolts to the specified torque.

M/T model

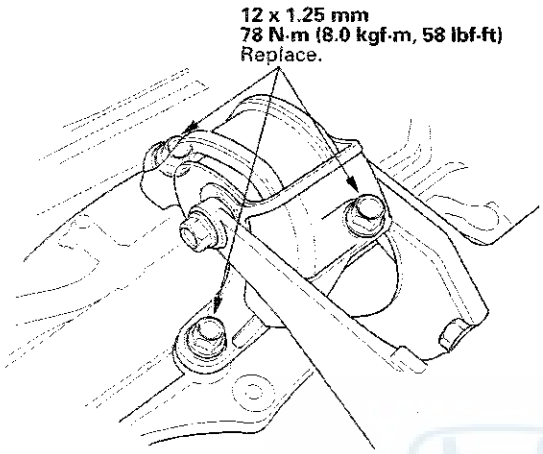

A/T model

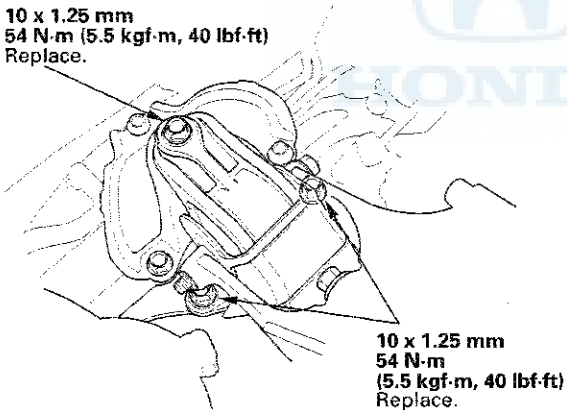

19. Tighten the front engine mount bolt (A), then install the front engine mount stop (B).

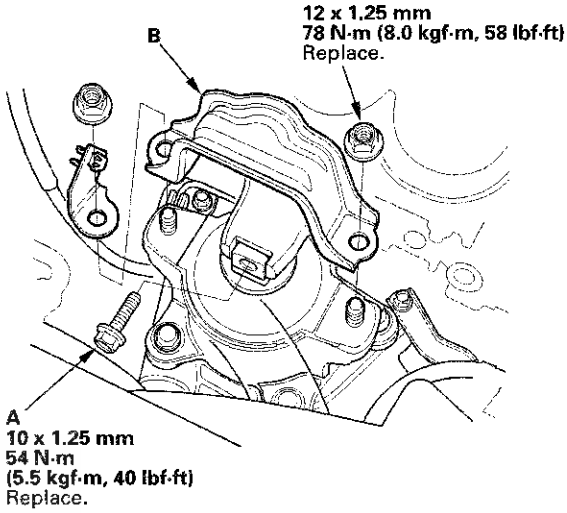

20. Install the battery base, then install the harness clamps (see step 64 on page 5-22).

21. Install the air cleaner assembly (see page 11-359).

22. Do the battery installation procedure (see page 22-90).

23. Install the strut brace (if equipped) (see page 20-289).

24. Refill the engine with the recommended engine oil (see step 4 on page 8-9).

Transmission End Crankshaft Oil Seal Installation - In Car

Special Tools Required
- Driver 07749-0010000
- Oil seal driver attachment 96 07ZAD-PNAA100

1. Remove the transmission:
   - Manual transmission (see page 13-7)
   - Automatic transmission (see page 14-232)
2. M/T model: Remove the flywheel (see step 17 on page 12-19), the clutch disc (see step 8 on page 12-17), and the pressure plate (see step 3 on page 12-16).
3. A/T model: Remove the drive plate (see page 14-257).
4. Clean and dry the crankshaft oil seal housing.
5. Apply a light coat of new engine oil around the crankshaft oil seal.
6. Apply a light coat of new engine oil to the lip of the crankshaft oil seal.
7. Use the driver and the oil seal driver attachment 96 to drive a new crankshaft oil seal squarely into the engine block to the specified installed height.

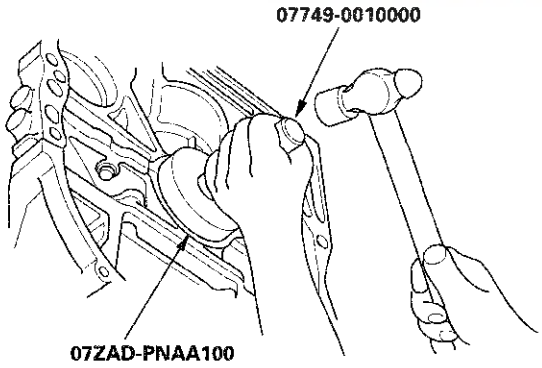

8. Measure the distance between the engine block (A) and the crankshaft oil seal (B).

Oil Seal Installed Height: 0.2—1.2 mm (0.008—0.047 in.)

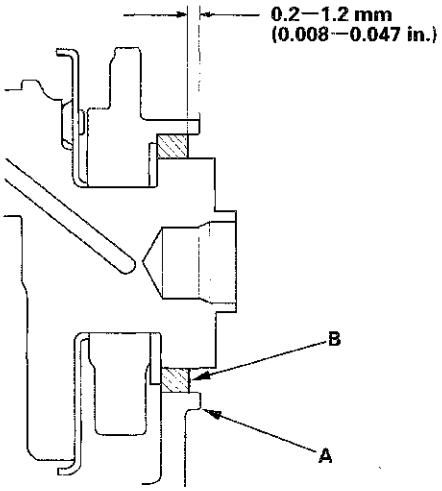

9. M/T model: Install the flywheel (see step 18 on page 12-19), the clutch disc (see step 26 on page 12-20), and the pressure plate (see step 27 on page 12-20).
10. A/T model: Install the drive plate (see page 14-257).
11. Install the transmission:
    - Manual transmission (see page 13-16)
    - Automatic transmission (see page 14-243)

Sealing Bolt Installation

NOTE: When installing the sealing bolt (A), always use a new washer.

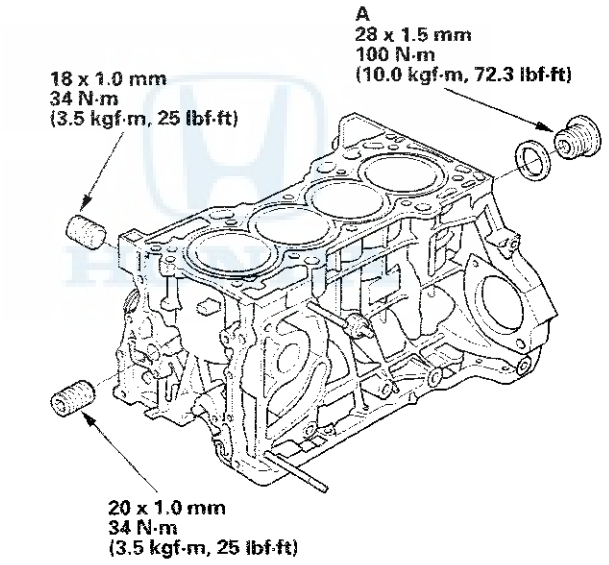

Navigation Tools: Click on the “Table of Contents” below, or use the Bookmarks to the left.

Engine Mechanical

Engine Lubrication

Special Tools 8-2
Component Location Index 8-3
Symptom Troubleshooting Index 8-4
Low Oil Pressure Indicator Circuit Diagram 8-5
Low Oil Pressure Indicator Circuit Troubleshooting (Open) 8-6
Low Oil Pressure Indicator Circuit Troubleshooting (Short) 8-7
Oil Pressure Switch Test 8-8
Oil Pressure Switch Replacement 8-8
Oil Pressure Test 8-9
Engine Oil Replacement 8-9
Engine Oil Filter Replacement 8-10
Oil Filter Base Replacement 8-11
Oil Filter Feed Pipe Replacement 8-12
Engine Oil Gallery Cap Replacement 8-12
Oil Jet Replacement 8-13
Oil Jet Inspection 8-13
Oil Pump Overhaul 8-14
Oil Pump Chain Inspection 8-22
Oil Pump Chain Replacement 8-23

Special Tools

Ref. No.	Tool Number	Description	Qty
①	07AAA-PLCA100	Oil Filter Wrench	1

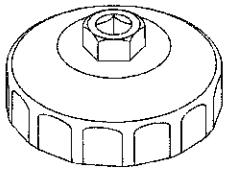

①

Component Location Index

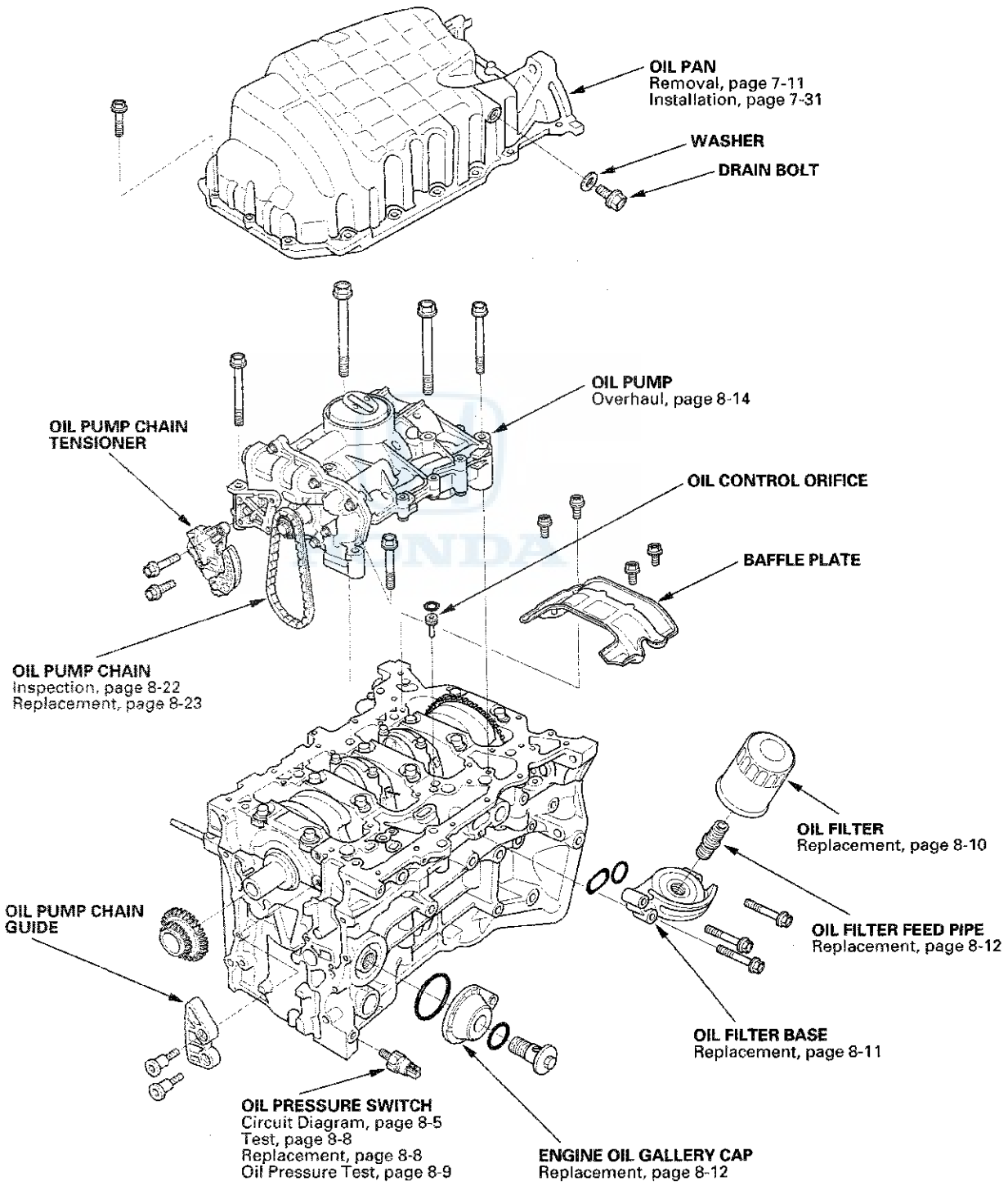

Symptom Troubleshooting Index

Symptom	Diagnostic procedure	Also check for
Excessive engine oil consumption	1. Verify the engine oil filler cap, the oil drain bolt, and the oil filter are tight. 2. Check for oil leaks. 3. Check for worn valve guide(s): • All models except PZEV (see page 6-38) • PZEV model (see page 6-88) or worn valve stem seal(s): • All models except PZEV (see page 6-38) • PZEV model (see page 6-88) 4. Check for damaged or worn piston ring(s) (see page 7-22). 5. Check for damaged or worn engine internal parts (cylinder wall, pistons, etc.) (see page 7-17).	
Low oil pressure indicator does not come on with the ignition switch in ON (II)	1. Do the low oil pressure indicator circuit troubleshooting (Open) (see page 8-6). 2. Test the oil pressure switch (see page 8-8).	An open in the wire between the engine control module (ECM)/ powertrain control module (PCM) and the oil pressure switch
Low oil pressure indicator stays on	1. Check the engine oil level. 2. Do the low oil pressure indicator circuit troubleshooting (Short) (see page 8-7). 3. Test the oil pressure switch (see page 8-8). 4. Check the engine oil pressure (see page 8-9). 5. Check the oil filter for clogging. 6. Check the oil screen for clogging. 7. Check the relief valve (see page 8-14). 8. Test the oil pump (see page 8-16).	A wire shorted to ground between the ECM/PCM and the oil pressure switch

Low Oil Pressure Indicator Circuit Diagram

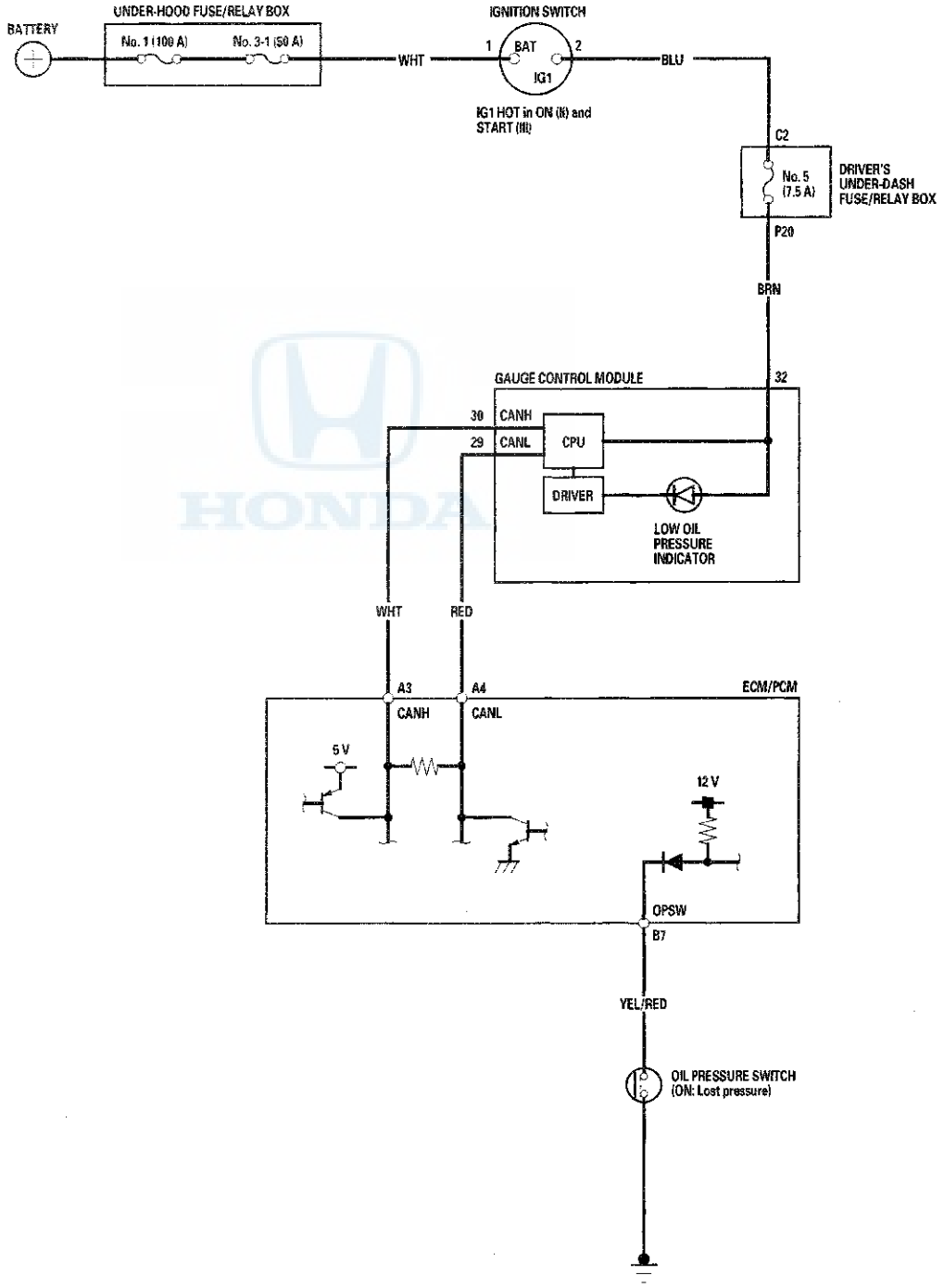

Low Oil Pressure Indicator Circuit Troubleshooting (Open)

1. Connect the Honda Diagnostic System (HDS) to the data link connector (DLC) (see step 2 on page 11-3).

2. Turn the ignition switch to ON (II).

3. Make sure the HDS communicates with the vehicle and the engine control module (ECM)/powertrain control module (PCM). If it does not communicate, troubleshoot the DLC circuit (see page 11-192).

4. Check for DTCs (see page 11-3). If a DTC is present, diagnose, and repair the cause before continuing with this test.

5. Check the OIL PRESSURE SWITCH in the PGM-FI DATA LIST with the HDS.

   Is ON indicated?

   YES—Replace the gauge control module (see page 22-324).■

   NO—Go to step 6.

6. Turn the ignition switch to LOCK (0).

7. Check the oil pressure switch (see page 8-8).

   Is the oil pressure switch OK?

   YES—Go to step 8.

   NO—Replace the oil pressure switch (see page 8-8). ■

8. Turn the ignition switch to ON (II), and jump the SCS line with the HDS, then turn the ignition switch to LOCK (0).

   NOTE: This step must be done to protect the ECM/PCM from damage.

9. Disconnect ECM/PCM connector B (49P) and the oil pressure switch connector.

10. Check for continuity between ECM/PCM connector terminal B7 and the oil pressure switch connector.

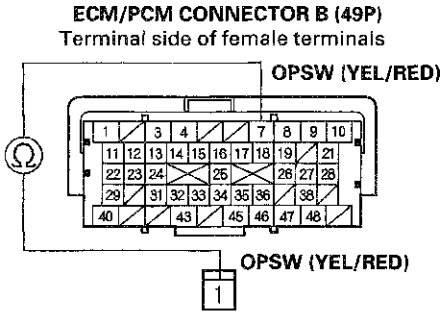

   Is there continuity?

   YES—Update the ECM/PCM if it does not have the latest software (see page 11-215), or substitute a known-good ECM/PCM (see page 11-7), then recheck. If the symptom/indication goes away with a known-good ECM/PCM, replace the original ECM/PCM (see page 11-216).■

   NO—Repair open in the wire between the oil pressure switch and ECM/PCM connector terminal B7.■

Low Oil Pressure Indicator Circuit Troubleshooting (Short)

1. Connect the Honda Diagnostic System (HDS) to the data link connector (DLC) (see step 2 on page 11-3).

2. Turn the ignition switch to ON (II).

3. Make sure the HDS communicates with the vehicle and the engine control module (ECM)/powertrain control module (PCM). If it does not communicate, troubleshoot the DLC circuit (see page 11-192).

4. Check for DTCs (see page 11-3). If a DTC is present, diagnose, and repair the cause before continuing with this test.

5. Start the engine, and check the OIL PRESSURE SWITCH in the PGM-FI DATA LIST with the HDS.

   Is OFF indicated?

   YES—Replace the gauge control module (see page 22-324). ■

   NO—Go to step 6.

6. Turn the ignition switch to LOCK (0).

7. Disconnect the oil pressure switch connector.

8. Start the engine, and check the OIL PRESSURE SWITCH in the PGM-FI DATA LIST with the HDS.

   Is OFF indicated?

   YES—Turn the ignition switch to LOCK (0), then go to step 9.

   NO—Turn the ignition switch to LOCK (0), then go to step 10.

9. Check the oil pressure switch (see page 8-8).

   Is the oil pressure switch OK?

   YES—Do the oil pressure test (see page 8-9).

   NO—Replace the oil pressure switch (see page 8-8). ■

10. Turn the ignition switch to ON (II), and jump the SCS line with the HDS, then turn the ignition switch to LOCK (0).

    NOTE: This step must be done to protect the ECM/PCM from damage.

11. Disconnect ECM/PCM connector B (49P).

12. Check for continuity between the oil pressure switch connector and body ground.

OIL PRESSURE SWITCH CONNECTOR

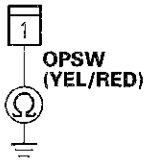

Wire side of female terminal

Is there continuity?

YES—Repair short to ground in the wire between the oil pressure switch and ECM/PCM connector terminal B7. ■

NO—Update the ECM/PCM if it does not have the latest software (see page 11-215), or substitute a known-good ECM/PCM (see page 11-7), then recheck. If the symptom/indication goes away with a known-good ECM/PCM, replace the original ECM/PCM (see page 11-216). ■

Oil Pressure Switch Test

1. Disconnect the oil pressure switch connector (A) from the oil pressure switch (B).

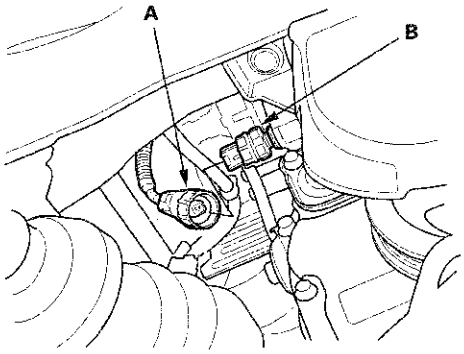

2. Check for continuity between the oil pressure switch terminal and the engine (ground). There should be continuity with the engine stopped. There should be no continuity with the engine running.

Oil Pressure Switch Replacement

1. Disconnect the oil pressure switch connector (A), then remove the oil pressure switch (B).

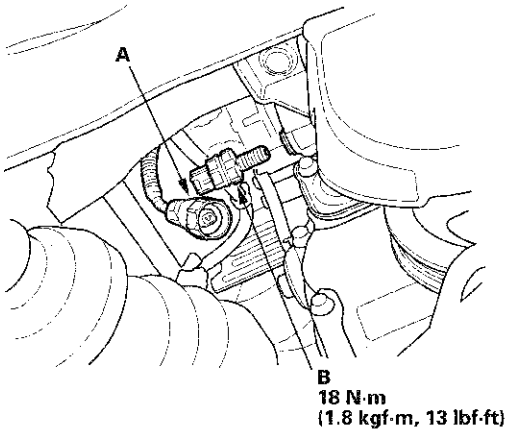

2. Remove any old liquid gasket from the switch and switch mounting hole.

3. Apply a very small amount of liquid gasket to the oil pressure switch threads, then install the oil pressure switch.

   NOTE: Using too much liquid gasket may cause liquid gasket to enter the oil passage or the end of the new oil pressure switch.

Oil Pressure Test

NOTE: If the low oil pressure warning indicator stays on with the engine running, check the engine oil level. If the oil level is correct, do the following test:

1. With the engine stopped, remove the oil pressure switch (see page 8-8), and install an oil pressure gauge (A).

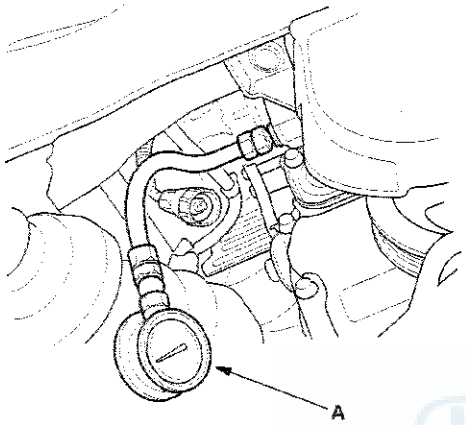

2. Start the engine. Shut it off immediately if the gauge registers no oil pressure. Repair the problem before continuing.

3. Allow the engine to reach operating temperature (fan comes on at least twice). The pressure should be:

   Engine Oil Temperature: 176 °F (80 °C)
   Engine Oil Pressure:
   At Idle: 70 kPa (0.7 kgf/cm², 10 psi) min.
   At 3,000 rpm: 300 kPa (3.1 kgf/cm², 44 psi) min.

4. If the oil pressure is out of specifications, inspect these items:

   - Blocking of oil filter.
   - Blocking of oil screen.
   - Inspect the oil pressure relief valve (see page 8-14).
   - Inspect the oil pump (see page 8-16).

Engine Oil Replacement

1. Warm up the engine.

2. Remove the drain bolt (A), and drain the engine oil.

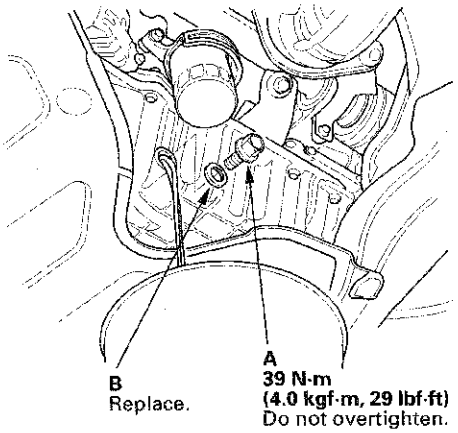

3. Reinstall the drain bolt with a new washer (B).

4. Refill the engine with the recommended oil (see page 3-2).

   Capacity
   At Oil Change:
   4.0 L (4.2 US qt)
   At Oil Change Including Filter:
   4.2 L (4.4 US qt)
   After Engine Overhaul:
   5.3 L (5.6 US qt)

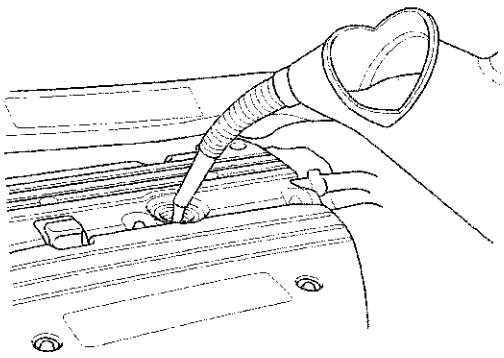

5. Run the engine for more than 3 minutes, then check for oil leakage.

(cont'd)

Engine Oil Replacement (cont'd)

6. If the maintenance minder reguired engine oil replacement, reset the maintenance minder (see page 3-4), and this procedure is complete. If the maintenance minder did not reguire engine oil replacement, go to step 7.

7. Turn the ignition switch to LOCK (0).

8. Connect the Honda Diagnostic System (HDS) to the data link connector (DLC) (see step 2 on page 11-3).

9. Turn the ignition switch to ON (II).

10. Make sure the HDS communicates with the vehicle and the engine control module (ECM)/powertrain control module (PCM). If it does not communicate, troubleshoot the DLC circuit (see page 11-192).

11. Select GAUGES in the BODY ELECTRICAL with the HDS.

12. Select ADJUSTMENT in GAUGES with the HDS.

13. Select SERVICE REMINDER in the ADJUSTMENT with the HDS.

14. Select RESET in the SERVICE REMINDER with the HDS.

15. Select RESETTING THE ENGINE OIL LIFE with the HDS.

    NOTE: If you changed the automatic transmission fluid (ATF) at the same time with the engine oil, select RESETTING THE ENGINE OIL LIFE AND ATF with the HDS instead.

Engine Oil Filter Replacement

Special Tools Required
Oil filter wrench 07AAA-PLCA100

1. Remove the oil filter with the oil filter wrench.

2. Inspect the filter to make sure the rubber seal is not stuck to the oil filter seating surface of the engine.

3. Inspect the threads (A) and the rubber seal (B) on the new filter. Clean the seat on the oil filter base, then apply a light coat of new engine oil to the filter rubber seal. Use only filters with a built-in bypass system.

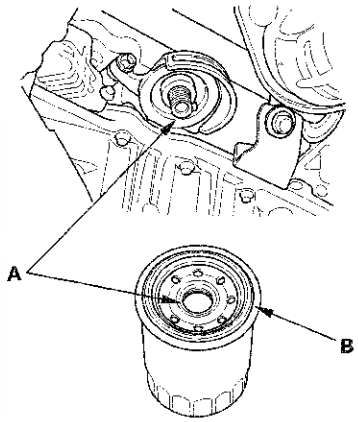

4. Install the oil filter by hand.

5. After the rubber seal seats, tighten the oil filter clockwise with the oil filter wrench.

Tighten:	**3/4 Turn Clockwise**
Tightening Torque:	**12 N·m (1.2 kgf·m, 8.7 lbf·ft)**

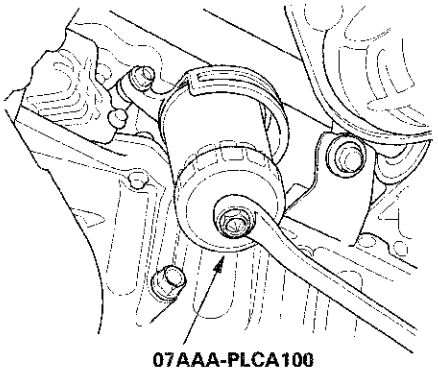

6. If four numbers or marks (1 to 4 or ▼ to ▼▼▼▼) are printed around the outside of the filter, use the following procedure to tighten the filter.

   - Spin the filter on until its seal lightly seats against the oil filter base, and note which number or mark is at the bottom.
   - Tighten the filter by turning it clockwise three numbers or marks from the one you noted. For example, if number 2 is at the bottom when the seal is seated, tighten the filter until the number 1 comes around the bottom.

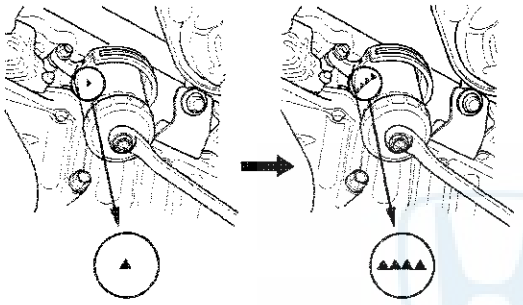

Number when rubber seal is seated. Number after tightening.

Number or Mark when rubber seal is seated	1 or ▼	2 or ▼▼	3 or ▼▼▼	4 or ▼▼▼▼
Number or Mark after tightening	4 or ▼▼▼▼	1 or ▼	2 or ▼▼	3 or ▼▼▼

7. After installation, fill the engine with oil up to the specified level, run the engine for more than 3 minutes, then check for oil leaks.

Oil Filter Base Replacement

1. Remove the oil filter (see page 8-10).

2. Remove the exhaust pipe bracket (A), then remove the oil filter base (B).

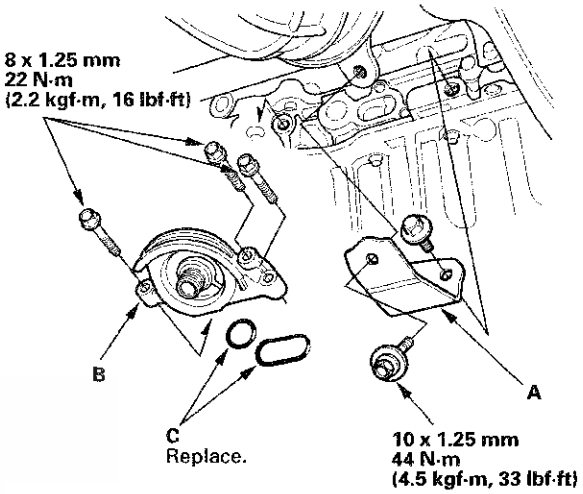

3. Clean the O-ring grooves and the mating surface with the oil filter base.

4. Install the oil filter base with new O-rings (C).

5. Install the oil filter (see page 8-10).

Oil Filter Feed Pipe Replacement

1. Remove the oil filter base (see page 8-11).
2. Remove the oil filter feed pipe.

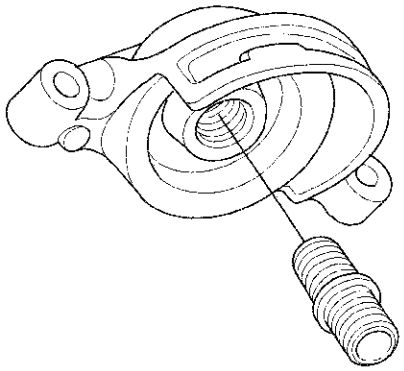

3. Install the two 20 x 1.5 mm nuts (A) onto the new oil filter feed pipe. Hold one nut with a wrench, then use a second wrench to tighten the other nut.

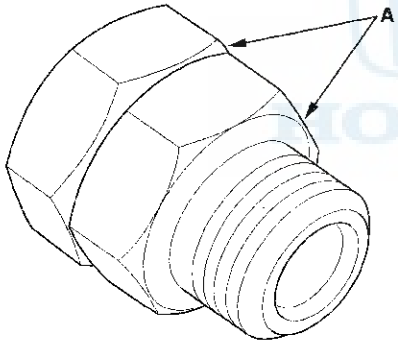

4. Tighten the oil filter feed pipe to the oil filter base to 49 N·m (5.0 kgf·m, 36 lbf·ft), then remove the nuts from the oil filter feed pipe.
5. Install the oil filter base (see page 8-11).

Engine Oil Gallery Cap Replacement

1. Remove the harness bracket (A), then remove the engine oil gallery cap (B).

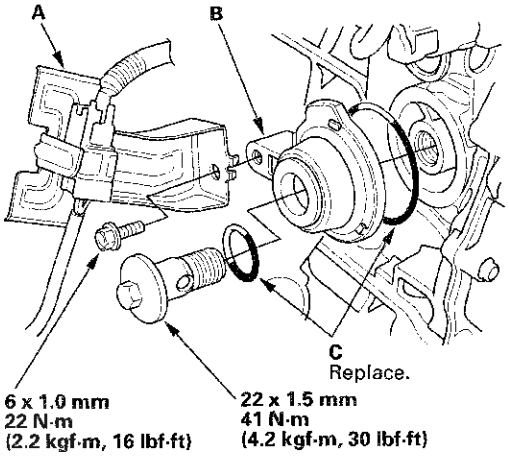

2. Clean the O-ring groove and mating surface with the engine oil gallery cap.
3. Install the engine oil gallery cap with new O-rings (C), then install the harness bracket.

Oil Jet Replacement

1. Remove the oil pump (see page 8-15).
2. Remove the baffle plate (see step 8 on page 7-14).
3. Remove the oil jet bolts (A), then remove the oil jets (B).

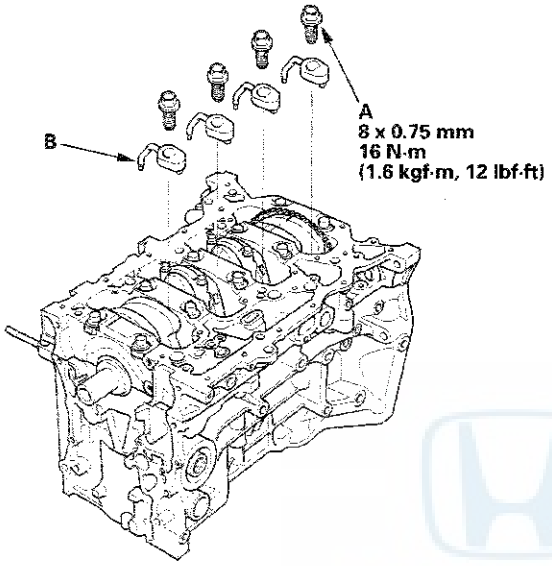

4. Carefully install the oil jets, and tighten the oil jet bolts.
5. Install the baffle plate (see step 26 on page 7-29).
6. Install the oil pump (see page 8-21).

Oil Jet Inspection

1. Remove the oil jet (see page 8-13), and inspect it as follows.
   - Make sure that a 1.2 mm (0.05 in.) diameter drill will go through the nozzle hole (A) (1.31 mm (0.052 in.) diameter).
   - Insert the other end of a 3.7 mm (0.15 in.) drill into the oil intake (3.8 mm (0.15 in.) diameter). Make sure the check ball (B) moves smoothly and has a stroke of about 2.0 mm (0.079 in.).
   - Check the oil jet operation with an air nozzle. It should take at least 380 kPa (3.9 kgf/cm^2, 55 psi) to unseat the check ball.

   NOTE: Replace the oil jet assembly, if the nozzle is damaged or bent.

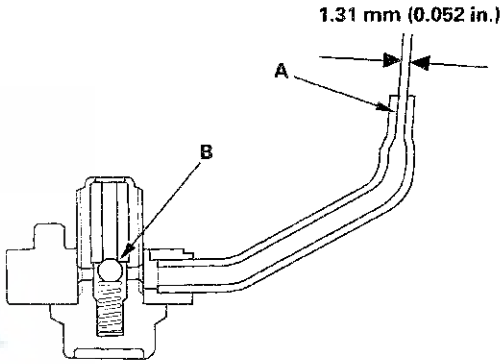

2. Carefully install the oil jet. The mounting torque is critical.

   Specified Torque: 16 N·m (1.6 kgf·m, 12 lbf·ft)

Oil Pump Overhaul

Exploded View

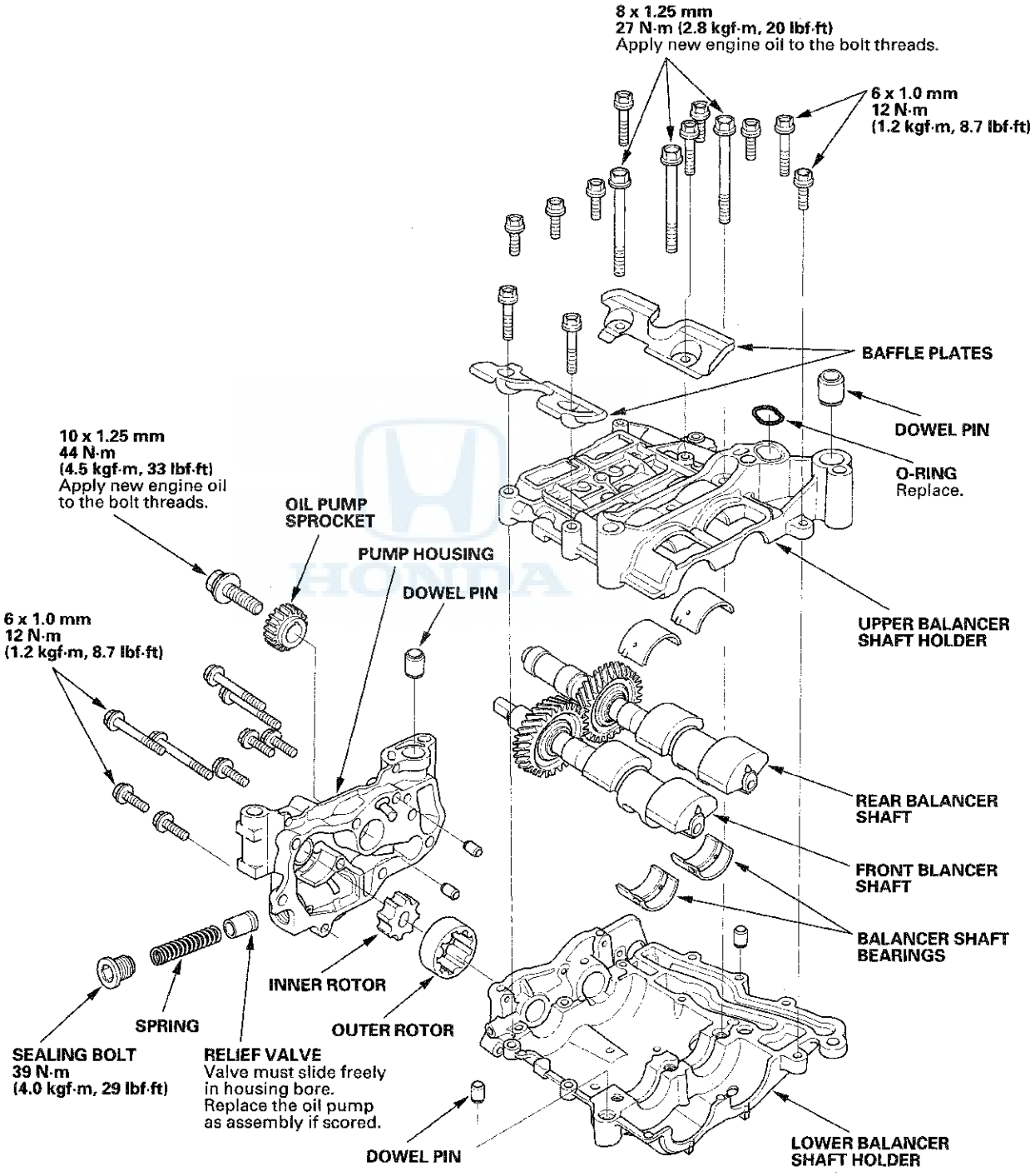

Oil Pump Removal

1. Turn the crankshaft pulley so its top dead center (TDC) mark (A) lines up with the pointer (B).

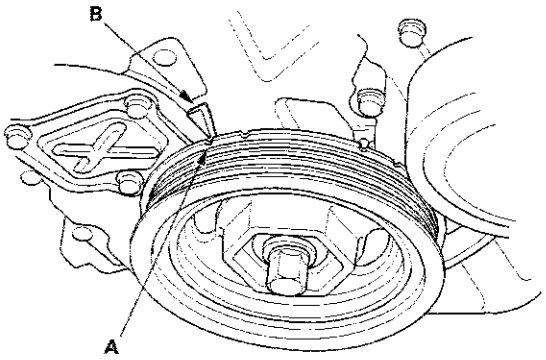

2. Remove the oil pan (see page 7-11).

3. To hold the rear balancer shaft, insert a 6 mm long pin punch (A) (Snap-on PPC108LA or equivalent) into the maintenance hole in the balancer shaft holder and through the rear balancer shaft.

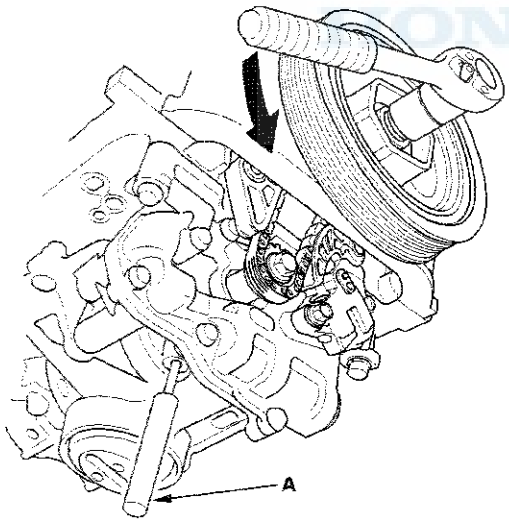

4. Turn the crankshaft counterclockwise to compress the oil pump chain auto-tensioner.

5. Align the holes on the lock (A) and the oil pump chain auto-tensioner (B), then insert a 3.0 mm (0.12 in.) diameter pin (C) into the holes. Turn the crankshaft clockwise to secure the pin.

   NOTE: Check the oil pump chain auto-tensioner cam position. If the position is not aligned, set the first cam to the first edge of the rack.

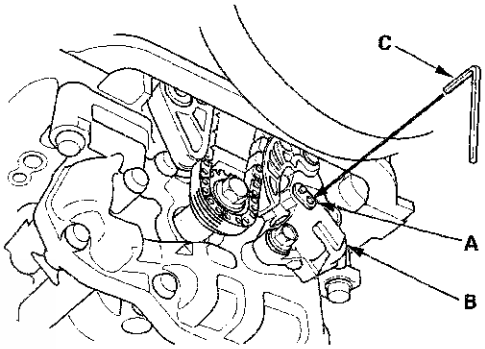

6. Loosen the oil pump sprocket mounting bolt (A).

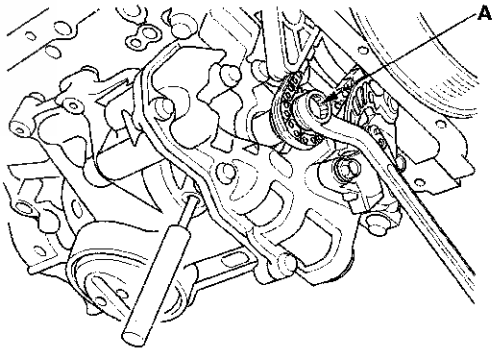

(cont'd)

Oil Pump Overhaul (cont'd)

7. Remove the oil pump sprocket (A) and the oil pump (B), then remove the oil pump chain auto-tensioner (C).

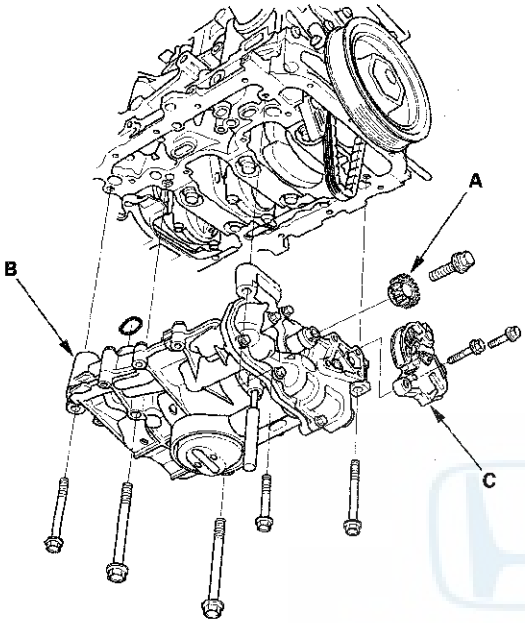

Oil Pump Inspection

1. Remove the pump housing.

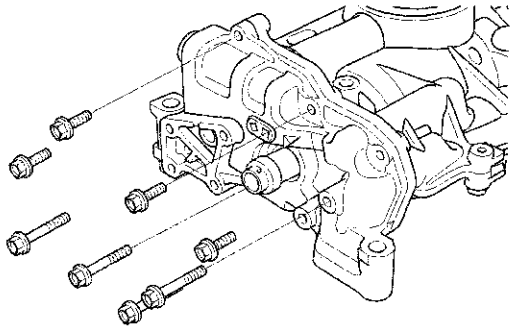

2. Align the inner rotor tooth (A) with the mark (B) on the outer rotor, then check the inner-to-outer rotor radial clearance between the inner rotor and the outer rotor. If the inner-to-outer rotor radial clearance exceeds the service limit, replace the oil pump.

Inner Rotor-to-Outer Rotor Radial Clearance
Standard (New): 0.05—0.15 mm (0.0020—0.0059 in.)
Service Limit: 0.19 mm (0.0075 in.)

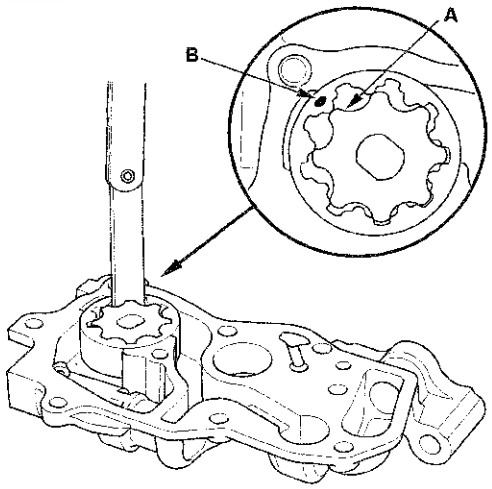

3. Check the pump housing-to-rotor axial clearance between the rotor (A) and the pump housing (B). If the pump housing-to-rotor axial clearance exceeds the service limit, replace the oil pump.

Pump Housing-to-Rotor Axial Clearance
Standard (New): 0.035—0.070 mm (0.0014—0.0028 in.)
Service Limit: 0.12 mm (0.005 in.)

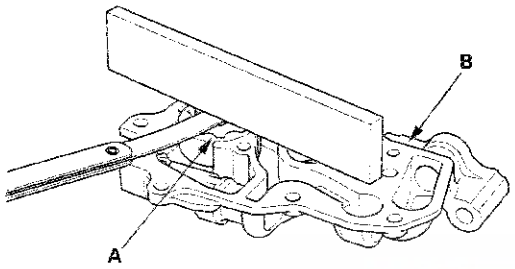

4. Check the pump housing-to-outer rotor radial clearance between the outer rotor (A) and the pump housing (B). If the pump housing-to-outer rotor radial clearance exceeds the service limit, replace the oil pump.

Pump Housing-to-Outer Rotor Radial Clearance
Standard (New): 0.150—0.210 mm (0.0059—0.0083 in.)
Service Limit: 0.23 mm (0.009 in.)

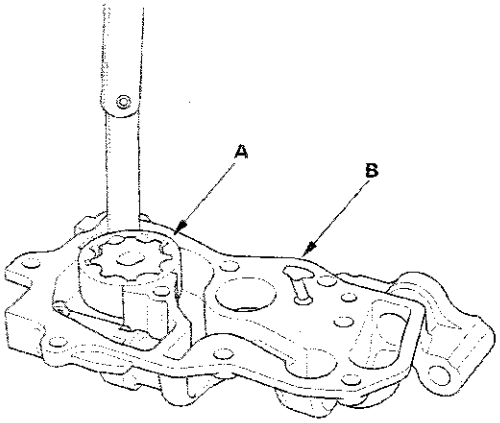

Balancer Shaft Inspection

1. Seat the balancer shaft by pushing it away from the oil pump sprocket end of the oil pump.

2. Zero the dial indicator against the end of the balancer shaft, then push the balancer shaft back and forth and read the end play.

Balancer Shaft End Play
Front Balancer Shaft:
Standard (New): 0.063—0.108 mm (0.0025—0.0043 in.)
Service Limit: 0.14 mm (0.006 in.)

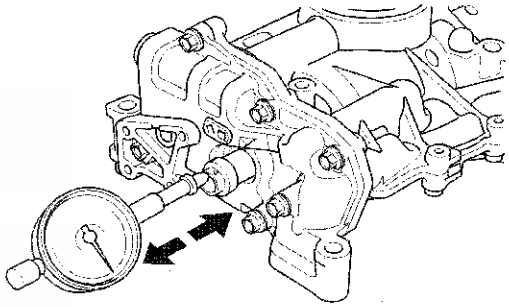

3. Remove the pump housing.

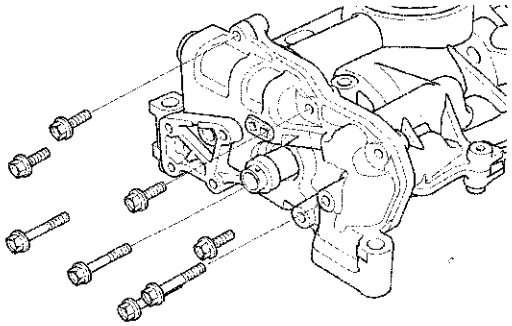

(cont'd)

Oil Pump Overhaul (cont'd)

4. Remove the upper balancer shaft holder (with bearings) (A) and the baffle plates (B), then remove the front balancer shaft (C) and the rear balancer shaft (D).

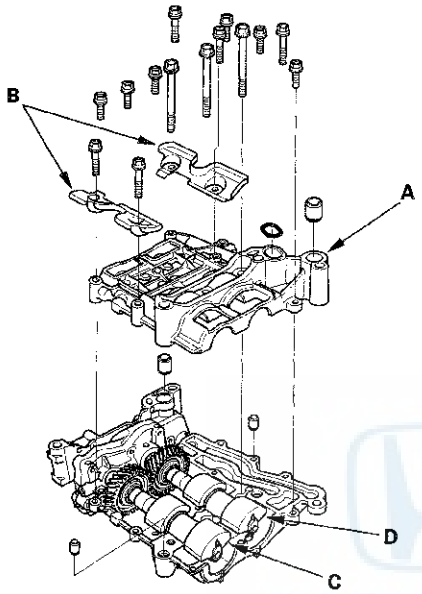

5. Measure the inner diameter of the No. 1 bearing for the front balancer shaft hole and the rear balancer shaft hole.

Bearing Inner Diameter
Front:
Standard (New): 20.000—20.020 mm (0.7874—0.7882 in.)
Service Limit: 20.03 mm (0.798 in.)
Rear:
Standard (New): 24.000—24.020 mm (0.9449—0.9457 in.)
Service Limit: 24.03 mm (0.946 in.)

Front

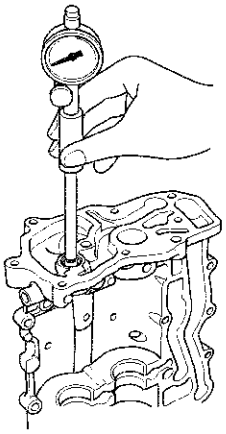

Rear

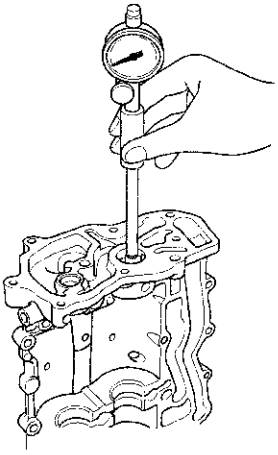

6. Measure the diameters of the No. 1 journals on the front balancer shaft and the rear balancer shaft.

Journal Diameter
Front:
Standard (New): 19.938—19.950 mm (0.7850—0.7854 in.)
Service Limit: 19.92 mm (0.784 in.)
Rear:
Standard (New): 23.938—23.950 mm (0.9424—0.9429 in.)
Service Limit: 23.92 mm (0.942 in.)

Front

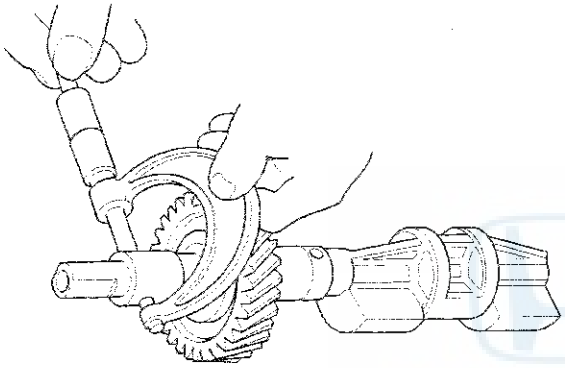

Rear

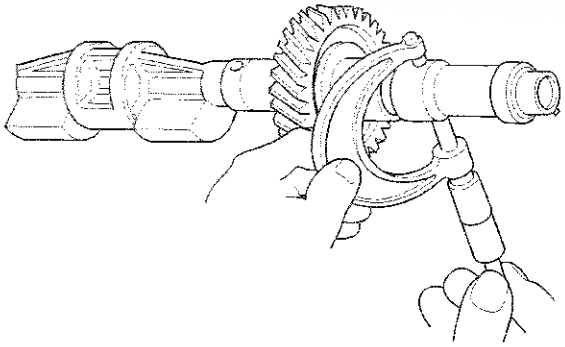

7. Clean both balancer shaft No. 2 journals and the bearing halves with a clean shop towel, then place both balancer shafts into the balancer holder.

8. Place one strip of plastigage across each No. 2 journal.

9. Reinstall the bearings and the upper balancer shaft holder, then tighten the bolts.

NOTE: Do not rotate the balancer shafts during inspection.

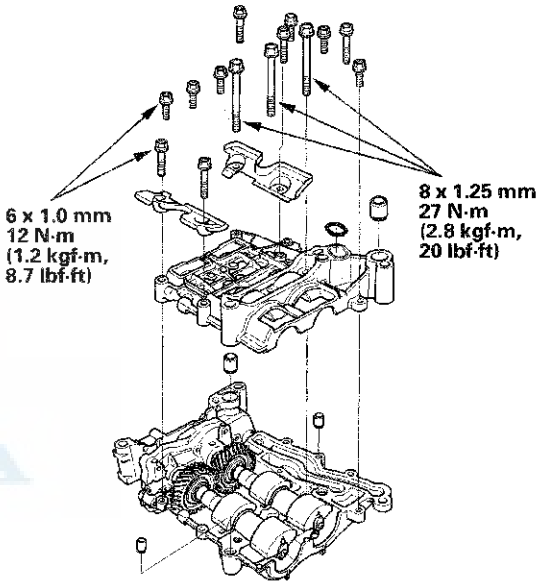

(cont'd)

Oil Pump Overhaul (cont'd)

10. Remove the upper balancer shaft holder and the bearings again, and measure the widest part with the plastigage. If balancer shaft No. 2 journal oil clearance is out-of-tolerance, install new bearings, and recheck. If it is still out-of-tolerance, replace the balancer shafts.

No. 2 Journal Oil Clearance
Standard (New): 0.060—0.120 mm (0.0024—0.0047 in.)
Service Limit: 0.15 mm (0.006 in.)

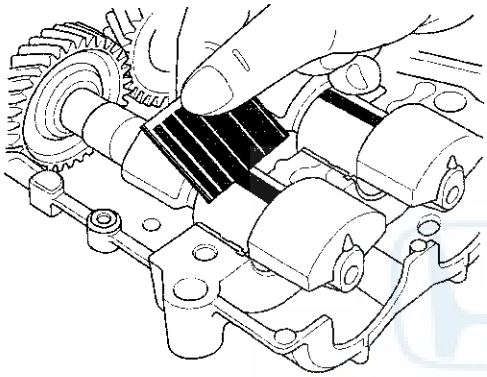

11. Align the punch mark on the rear balancer shaft in the center of the two punch marks on the front balancer shaft, then install the balancer shafts on the lower balancer shaft holder.

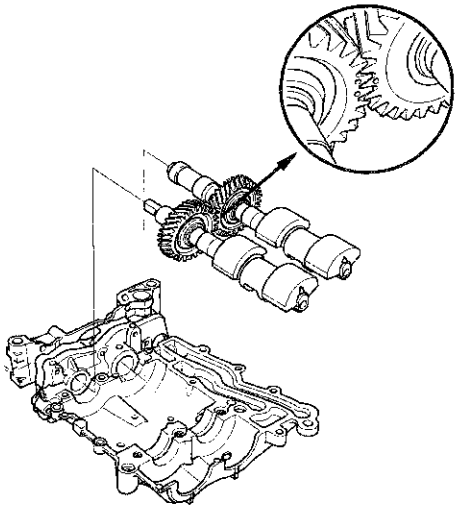

12. Apply new engine oil to the threads of the 8 mm bolts (A).

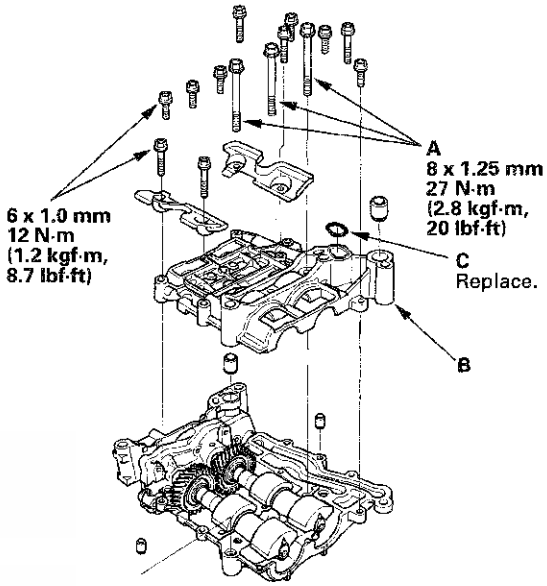

13. Install the upper balancer shaft holder (B) with a new O-ring (C).

14. Install the pump housing.

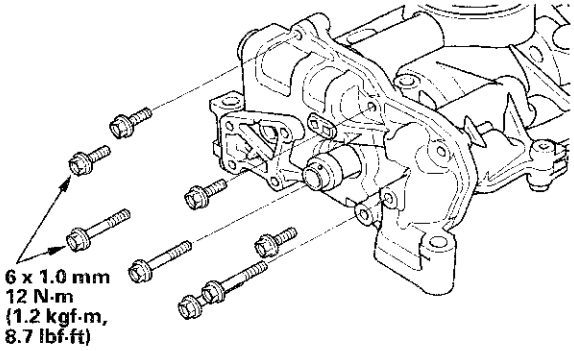

Oil Pump Installation

1. Make sure the No. 1 piston top dead center (TDC) mark (A) lines up with the pointer (B).

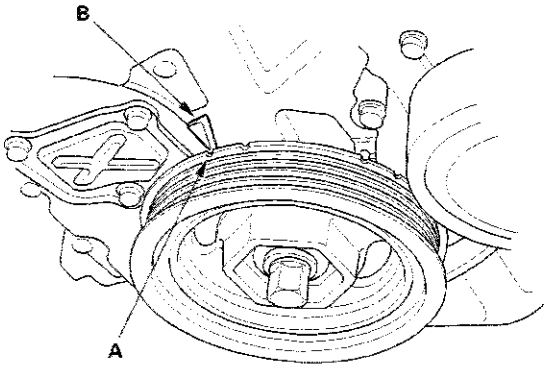

2. Align the dowel pin (A) on the rear balancer shaft with the mark (B) on the oil pump.

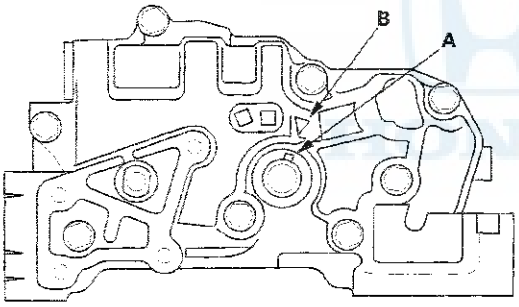

3. To hold the rear balancer shaft, insert a 6 mm long pin punch (A) (Snap-on PPC108LA or equivalent) into the maintenance hole in the balancer shaft holder and through the rear balancer shaft.

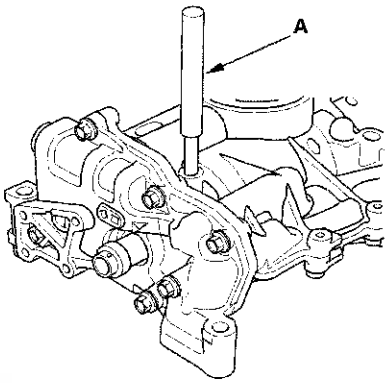

4. Turn the plate (A) counterclockwise, to release the lock, then push the oil pump chain auto-tensioner arm (B), and set the first cam (C) to the first edge of the rack (D). Insert a 3.0 mm (0.12 in.) diameter pin (E) into the hole (F).

   NOTE: If the chain tensioner is not set up as described, the tensioner will become damaged.

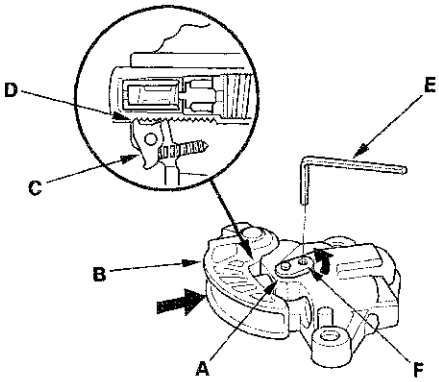

(cont'd)

Oil Pump Overhaul (cont'd)

5. Install the oil pump chain auto-tensioner (A).

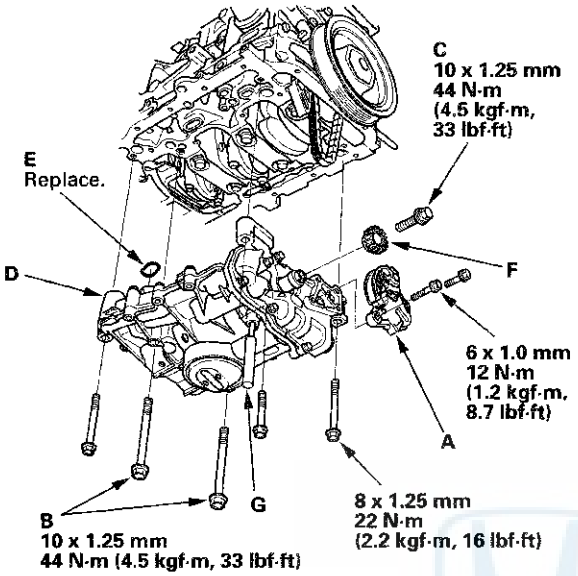

6. Apply new engine oil to the threads of the oil pump mounting bolts (B) and the oil pump sprocket mounting bolt (C), then Loosely install the oil pump (D) with a new O-ring (E), then install the oil pump sprocket (F).

7. Tighten the oil pump mounting bolts and the oil pump sprocket mounting bolt.

8. Remove the 6 mm pin punch (G).

9. Remove the 3.0 mm (0.12 in.) diameter pin (A) from the oil pump chain auto-tensioner.

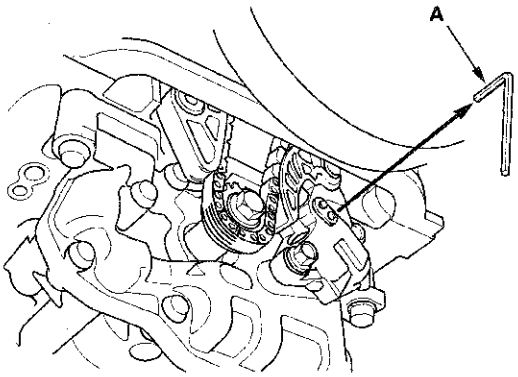

10. Install the oil pan (see page 7-31).

Oil Pump Chain Inspection

1. Remove the oil pan (see page 7-11).

2. Measure the oil pump chain auto-tensioner rod length. If the length is over the service limit, replace the oil pump chain (see page 8-23).

Oil Pump Chain Auto-Tensioner Rod Length
Service Limit: 13 mm (0.51 in.)

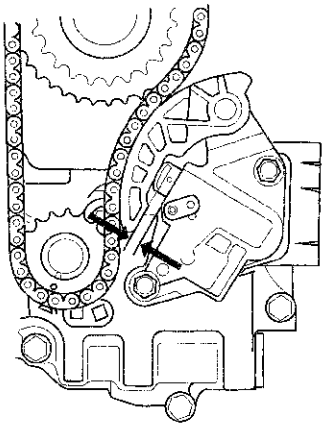

3. Install the oil pan (see page 7-31).

Oil Pump Chain Replacement

NOTE: Keep the oil pump chain away from magnetic fields.

Removal

1. Remove the drive belt (see page 4-30).

2. Remove the oil pan (see page 7-11).

3. Support the engine with a jack and a wood block under the edge of the engine block.

   NOTE: Do not hit the oil pump and baffle plate when placing the jack on the edge of the engine block.

4. Remove the cam chain:

   - All models except PZEV (see page 6-13)
   - PZEV model (see page 6-62)

5. Loosely install the crankshaft pulley.

6. To hold the rear balancer shaft, insert a 6 mm long pin punch (A) (Snap-on PPC108LA or equivalent) into the maintenance hole in the balancer shaft holder and through the rear balancer shaft.

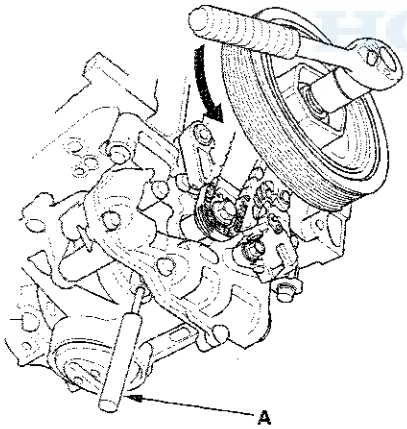

7. Turn the crankshaft counterclockwise to compress the oil pump chain auto-tensioner.

8. Remove the crankshaft pulley.

9. Align the holes on the lock (A) and the oil pump chain auto-tensioner (B), then insert a 3.0 mm (0.12 in.) diameter pin (C) into the holes. Turn the crankshaft clockwise to secure the pin.

   NOTE: Check the oil pump chain auto-tensioner cam position is not aligned, set the first cam to the first edge of the rock.

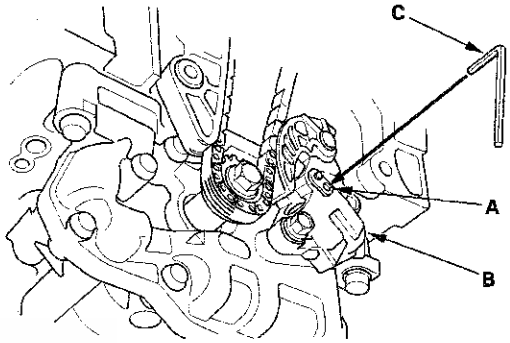

10. Loosen the oil pump sprocket mounting bolt (A).

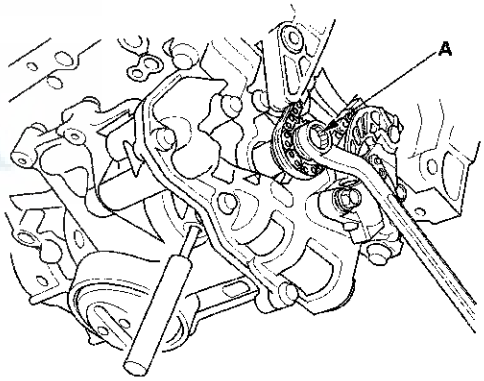

(cont'd)

Oil Pump Chain Replacement (cont'd)

11. Loosen the lower oil pump chain auto-tensioner bolt (A), then remove the upper oil pump chain auto-tensioner bolt (B), then turn the oil pump chain auto-tensioner clockwise (C).

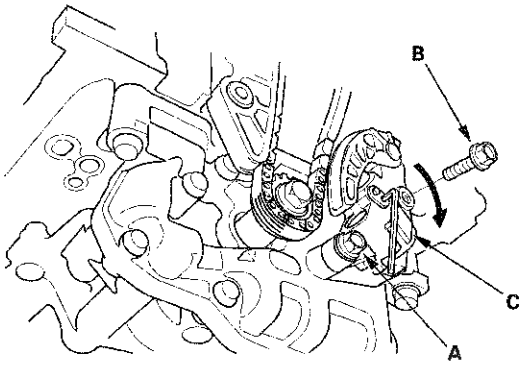

12. Remove the oil pump sprocket (A) and the oil pump chain guide (B).

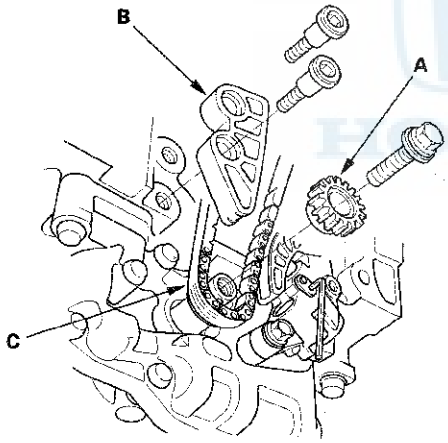

13. Remove the oil pump chain (C).

Installation

1. Set the crankshaft to top dead center (TDC). Align the TDC mark (A) on the crankshaft sprocket with the pointer (B) on the engine block.

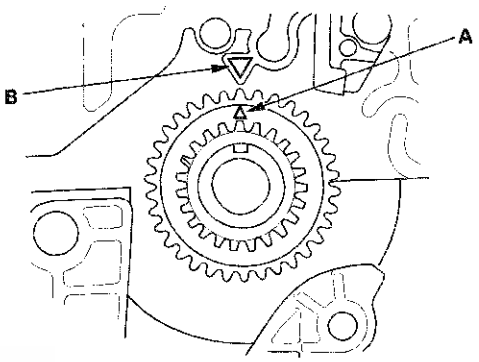

2. Install the oil pump chain on the crankshaft sprocket with the colored link plate (A) aligned with the TDC mark (B) on the crankshaft sprocket.

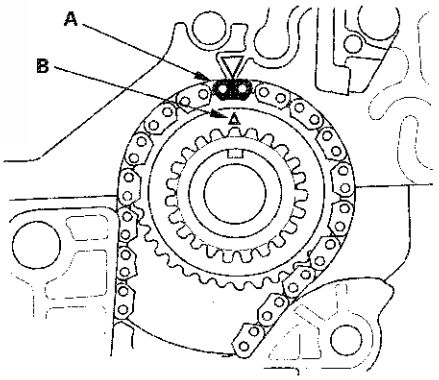

3. Check the auto-tensioner cam position. If the position is not aligned, set the first cam to the first edge of the rack (see step 4 on page 8-21).

4. Set the oil pump chain on the oil pump chain sprocket (A) with the punch mark (B) aligned with the center of the colored link plates (C), then install the oil pump chain sprocket to the oil pump.

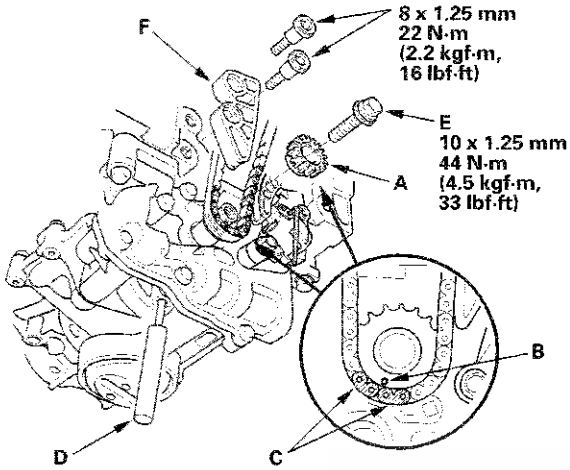

5. To hold the rear balancer shaft, insert a pin driver (D) (Snap-on PPC108LA or equivalent) into the maintenance hole in the balancer shaft holder and through the rear balancer shaft.

6. Apply new engine oil to the threads of the oil pump sprocket mounting bolt (E), then install the oil pump sprocket mounting bolt and oil pump chain guide (F).

7. Turn the oil pump chain auto-tensioner (A) counterclockwise, then install the upper oil pump chain auto-tensioner bolt (B), and tighten the lower oil pump chain auto-tensioner bolt (C).

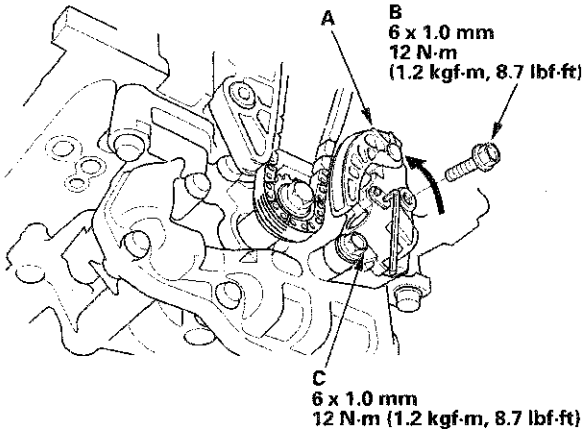

8. Remove the 3.0 mm (0.12 in.) diameter pin (A) from the oil pump chain auto-tensioner.

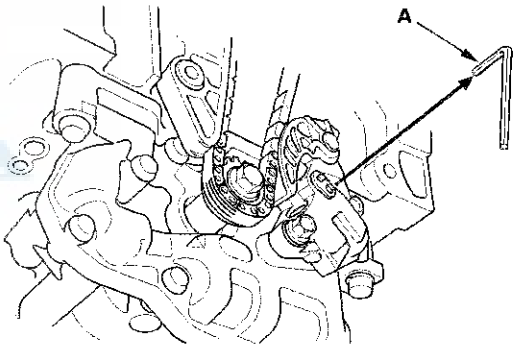

9. Install the cam chain:

   - All models except PZEV (see page 6-15)
   - PZEV model (see page 6-64)

10. Remove the wood block and the jack.

11. Install the oil pan (see page 7-31).

12. Install the drive belt (see page 4-30).

Navigation Tools: Click on the “Table of Contents” below, or use the Bookmarks to the left.

Engine Mechanical

Intake Manifold and Exhaust System

Intake Manifold Removal and Installation 9-2
Exhaust Pipe and Muffler Replacement 9-8

Intake Manifold and Exhaust System

Intake Manifold Removal and Installation

Exploded View

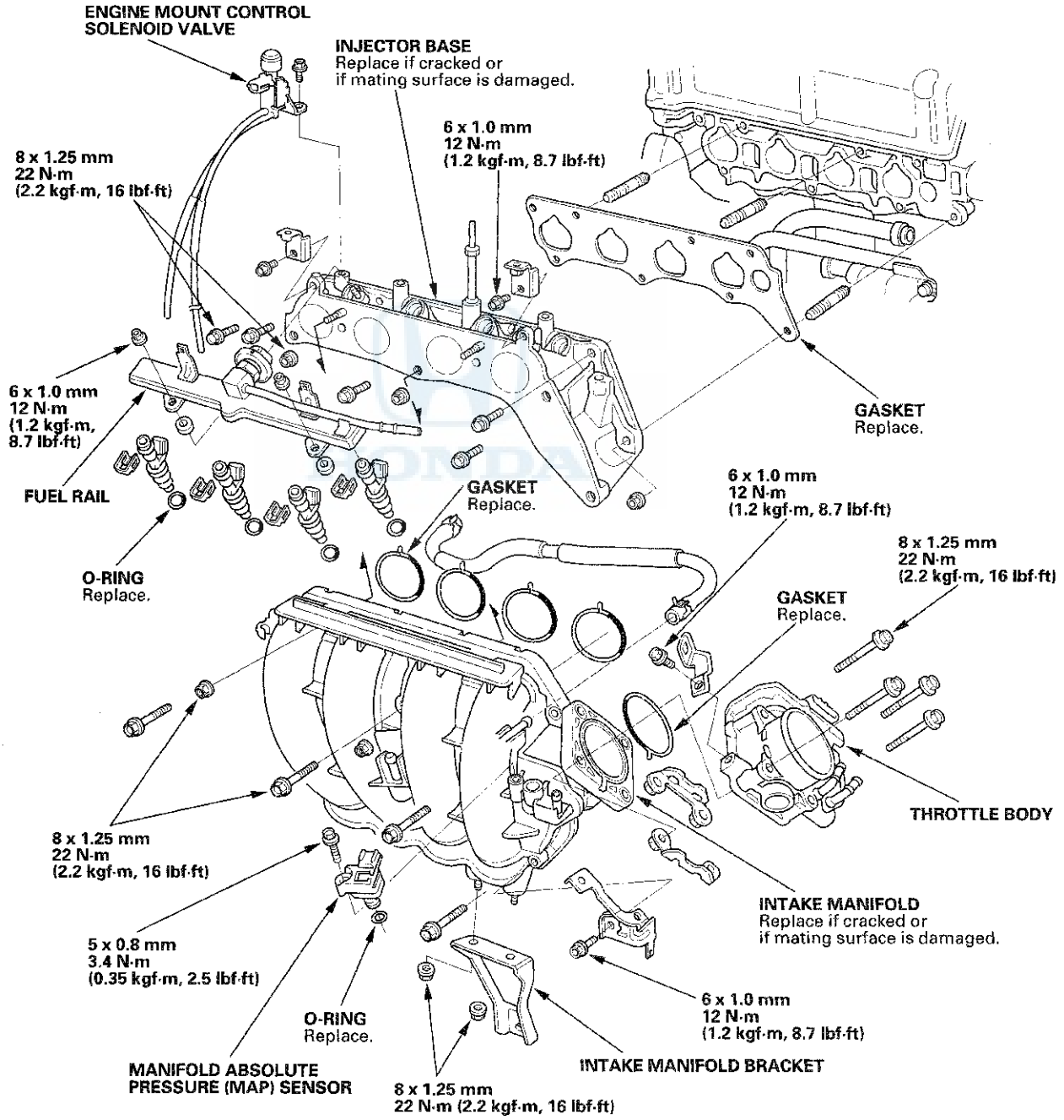

Removal

1. Do the battery removal procedure (see page 22-90).

2. Remove the front grille cover:

   - 2-door (see page 20-257)
   - 4-door (see page 20-257)

3. Remove the water separator (A) and the intake air duct (B).

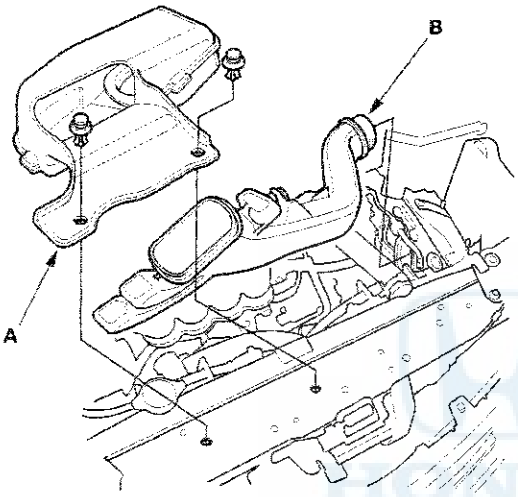

4. Remove the harness clamps, then remove the battery base (see step 8 on page 5-3).

5. Remove the engine cover.

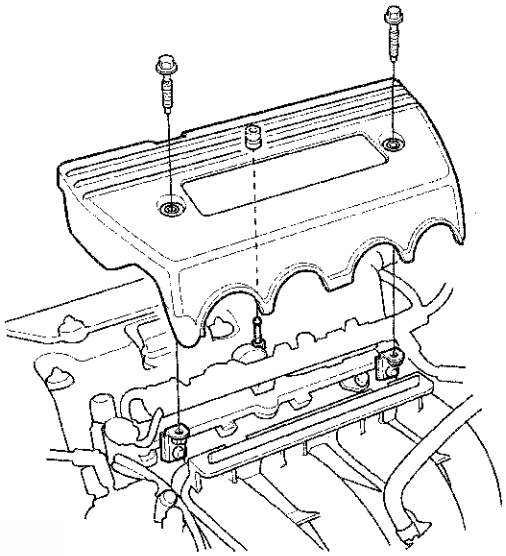

6. Disconnect the breather pipe (A), then remove the intake air duct (B).

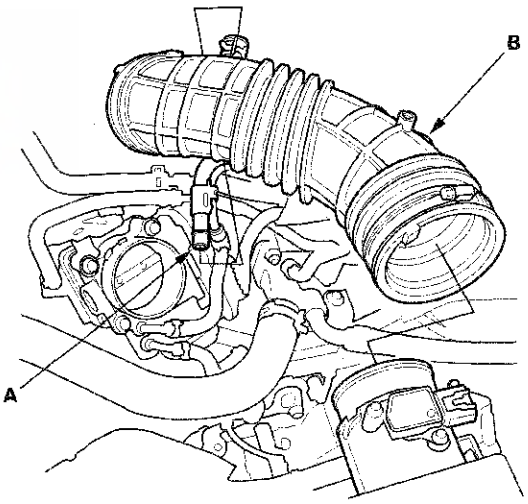

(cont'd)

Intake Manifold Removal and Installation (cont'd)

7. Disconnect the evaporative emission (EVAP) canister hose (A) and the brake booster vacuum hose (B).

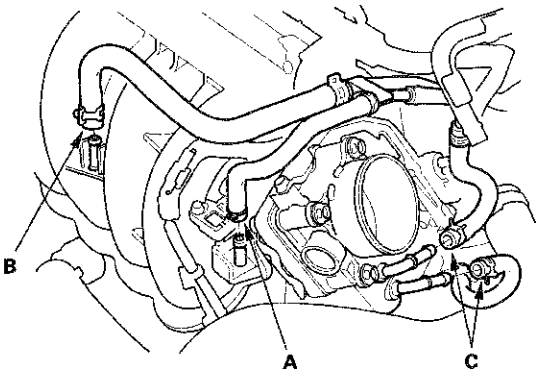

8. Disconnect the water bypass hoses (C), then plug the water bypass hoses.

9. Disconnect the manifold absolute pressure (MAP) sensor connector (A) and the throttle actuator connector (B), then remove the wire harness clamps (C).

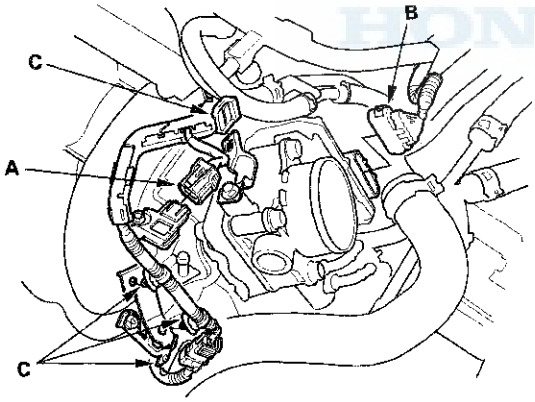

10. Remove the intake manifold bracket.

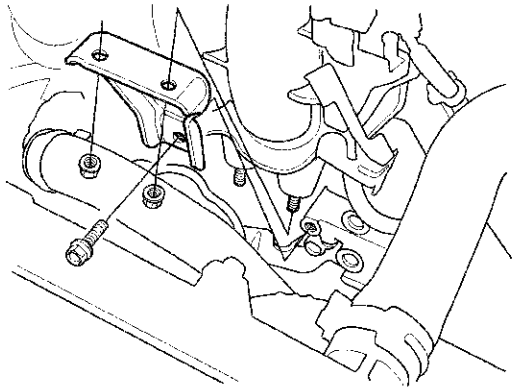

11. Disconnect the vacuum hose (A) from the intake manifold.

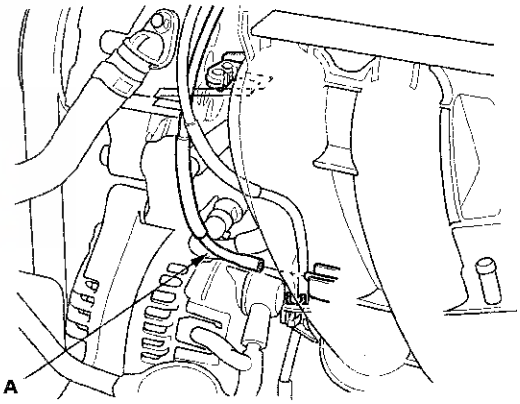

12. Remove the intake manifold (A), then disconnect the positive crankcase ventilation (PCV) hose (B) from the intake manifold.

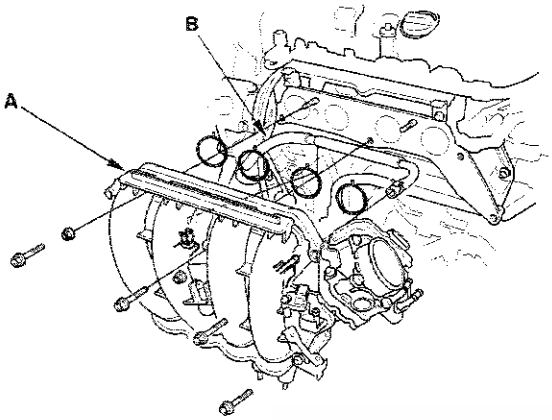

Installation

1. Connect the positive crankcase ventilation (PCV) hose (A) to the intake manifold, then install the intake manifold (B) with new gaskets (C), and tighten the bolts and nuts in a crisscross pattern in three steps, beginning with the inner bolt.

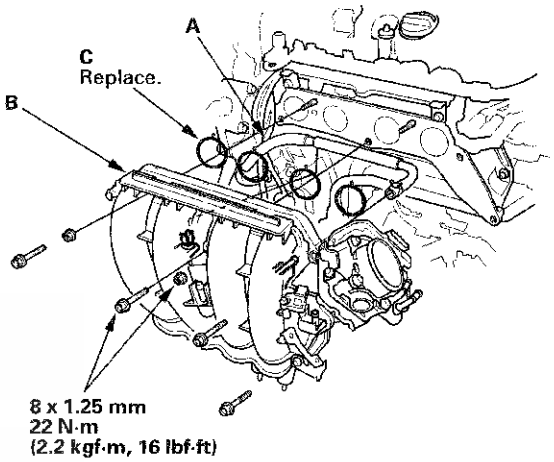

2. Connect the vacuum hose (A) to the intake manifold.

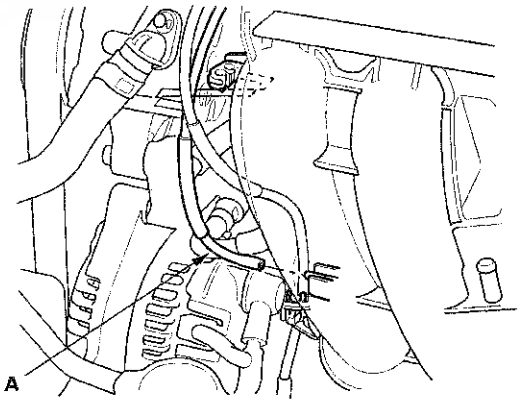

(cont'd)

Intake Manifold Removal and Installation (cont'd)

3. Install the intake manifold bracket.

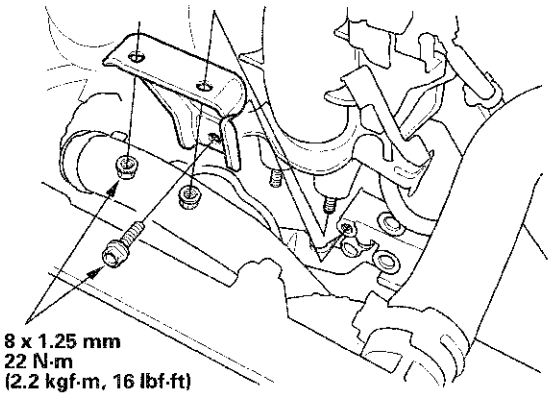

4. Connect the manifold absolute pressure (MAP) sensor connector (A) and the throttle actuator connector (B), then install the wire harness clamps (C).

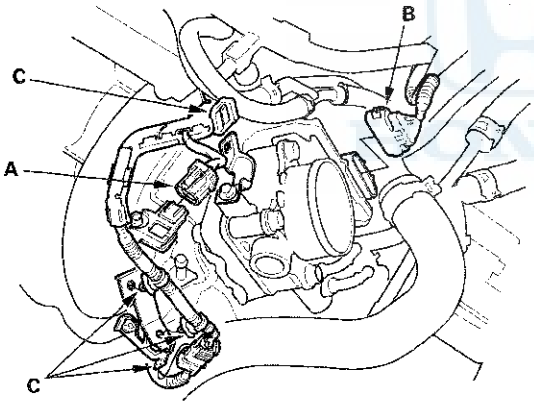

5. Connect the water bypass hoses (A).

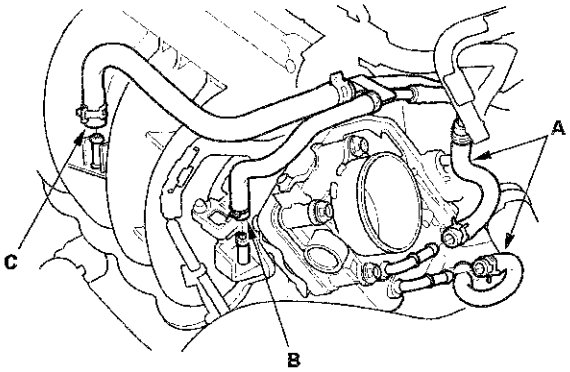

6. Connect the evaporative emission (EVAP) canister hose (B) and the brake booster vacuum hose (C).

7. Install the intake air duct (A), then connect the breather pipe (B).

   NOTE: When tightening the screw of the hose band (C), align the edge of the hose band (D) with the mark (E) painted on the hose band. If you tighten the screw over the mark, replace the hose band.

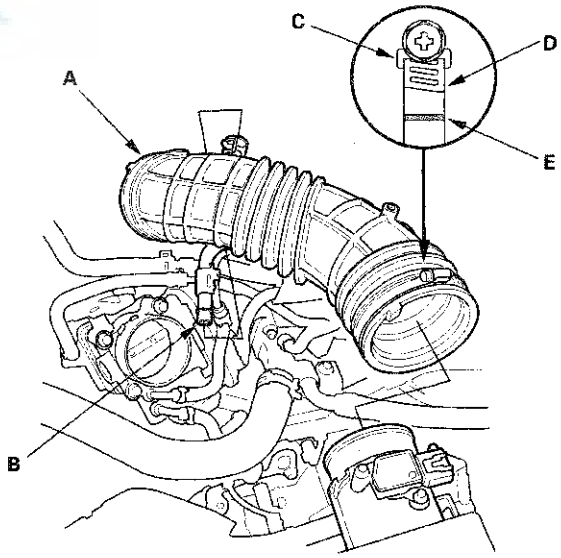

8. Install the engine cover.

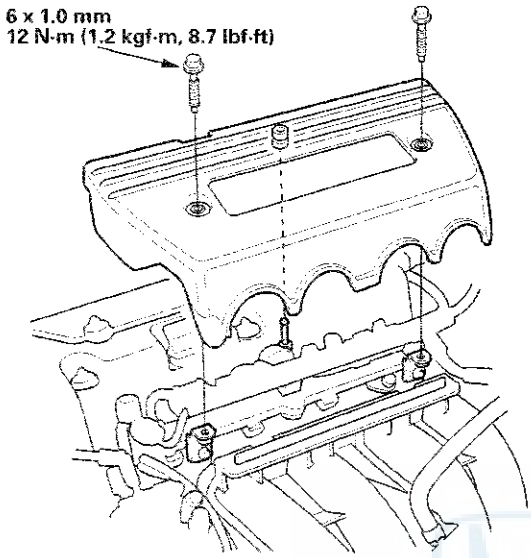

9. Install the battery base, then install the harness clamps (see step 64 on page 5-22).

10. Install the water separator (A) and the intake air duct (B).

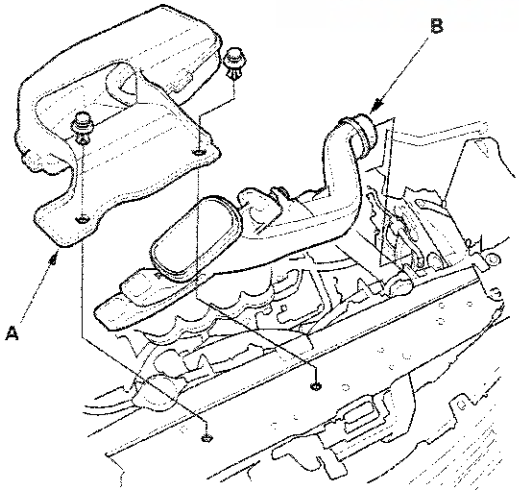

11. Install the front grille cover:

    - 2-door (see page 20-257)
    - 4-door (see page 20-257)

12. Do the battery installation procedure (see page 22-90).

13. After installation, check that all tubes, hoses, and connectors are installed correctly.

14. Clean up any spilled engine coolant.

15. Refill the radiator with engine coolant, and bleed the air from the cooling system with the heater valve open (see step 6 on page 10-6).

Exhaust Pipe and Muffler Replacement

NOTE: Use new gaskets and self-locking nuts when reassembling.

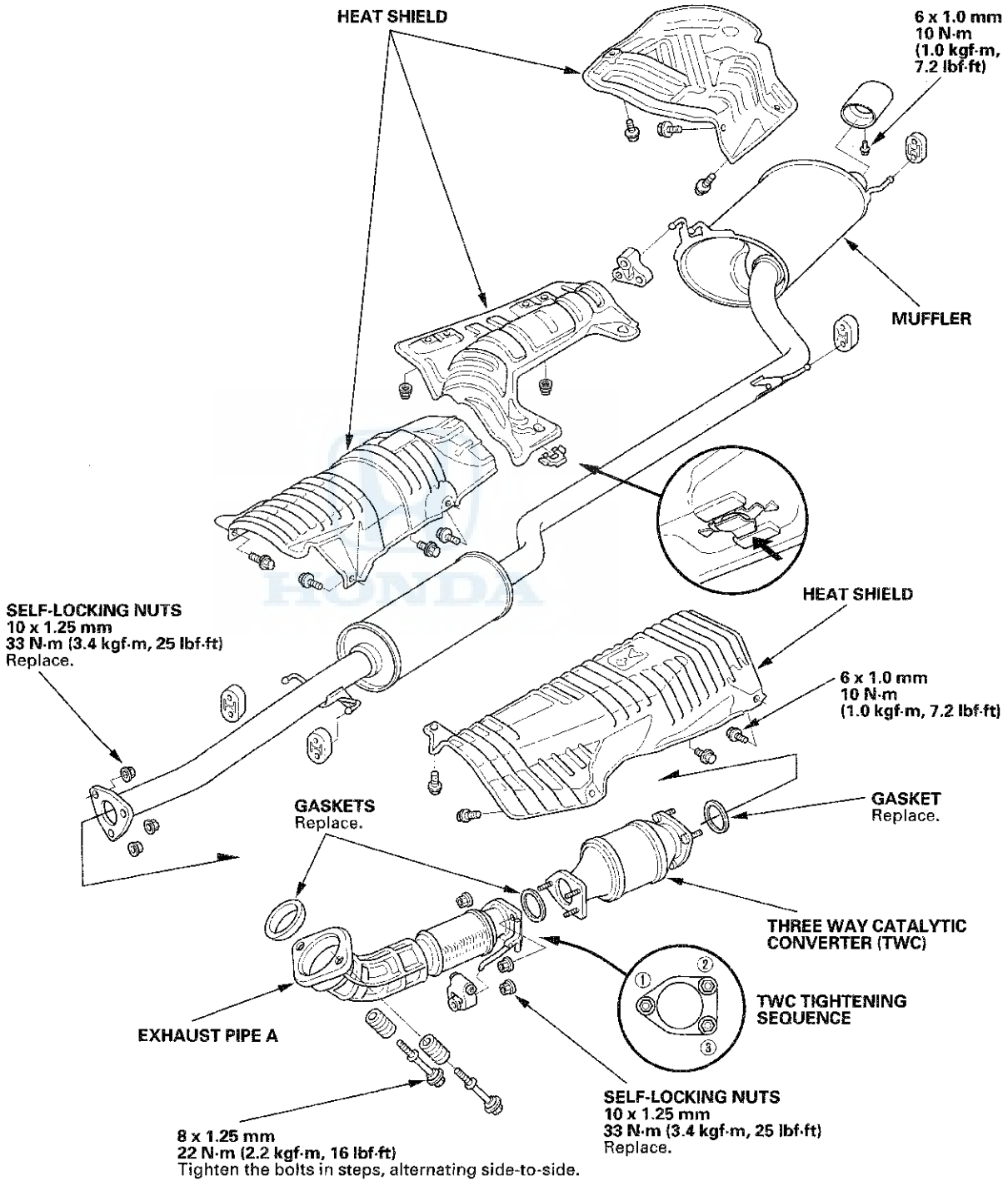

Navigation Tools: Click on the “Table of Contents” below, or use the Bookmarks to the left.

Engine Cooling

Cooling System

Component Location Index 10-2
Radiator Cap Test 10-3
Radiator Test 10-3
Fan Motor Test 10-4
Thermostat Test 10-4
Water Pump Inspection 10-5
Water Pump Replacement 10-5
Coolant Check 10-6
Coolant Replacement 10-6
Thermostat Replacement 10-8
Water Passage Replacement 10-9
Water Outlet Removal and Installation 10-12
Fan, Fan Motor, and Shroud Removal and Installation 10-13
Radiator Replacement 10-16

Fan Controls

Component Location Index 10-18
Symptom Troubleshooting Index 10-19
Circuit Diagram 10-20
Radiator Fan Circuit Troubleshooting 10-21

Component Location Index

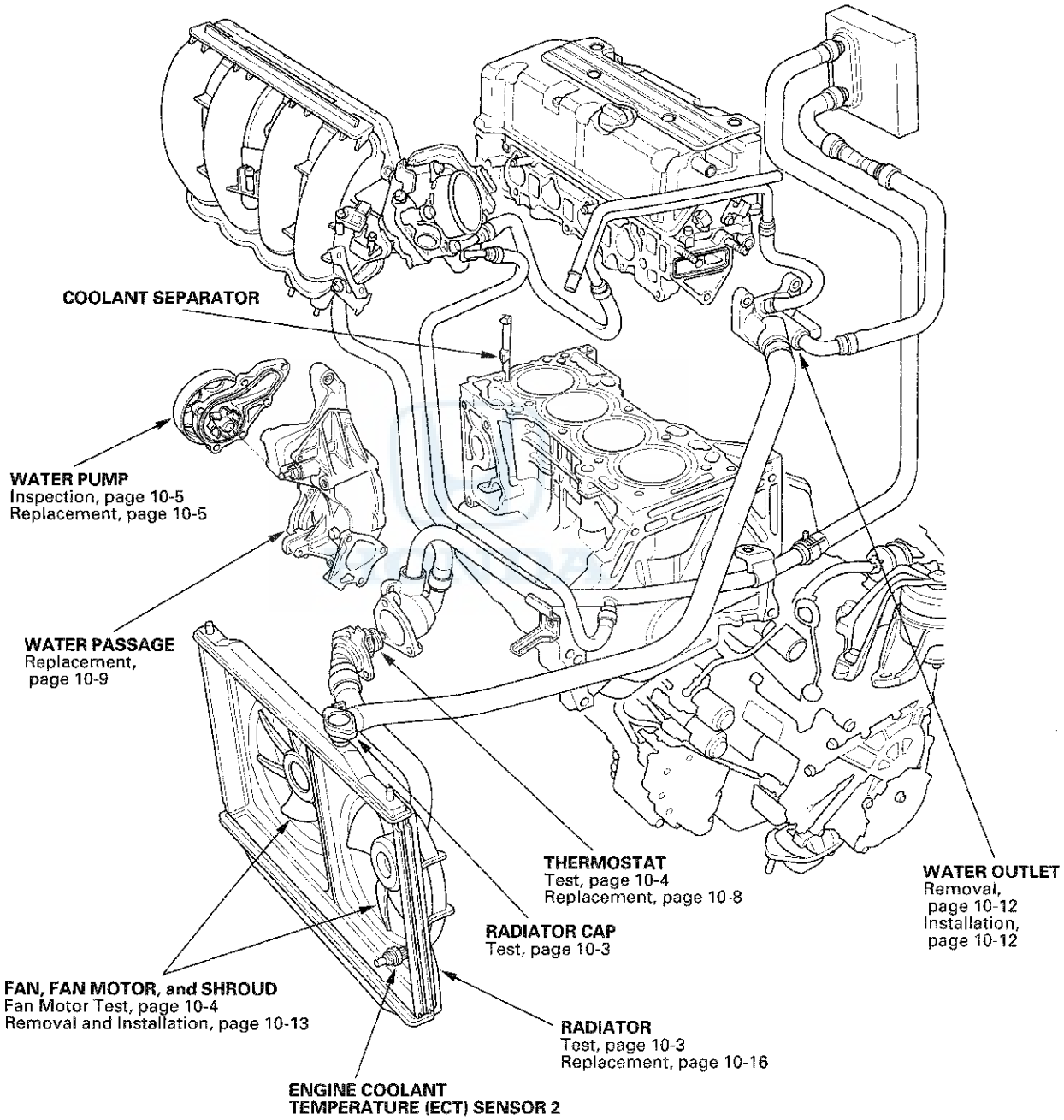

Radiator Cap Test

1. Wait until the engine is cool, then carefully remove the radiator cap (A). Wet the radiator cap seal with engine coolant, then install it on a commercially available pressure tester (B).

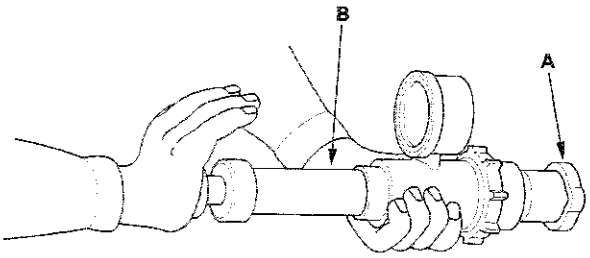

2. Apply a pressure of 93—123 kPa (0.95—1.25 kgf/cm², 14—18 psi).
3. Check for a drop in pressure.
4. If the pressure drops, replace the radiator cap.

Radiator Test

1. Wait until the engine is cool, then carefully remove the radiator cap and fill the radiator with engine coolant to the base of the filler neck.
2. Attach a commercially available pressure tester (A) to the radiator, and apply a pressure of 93—123 kPa (0.95—1.25 kgf/cm², 14—18 psi).

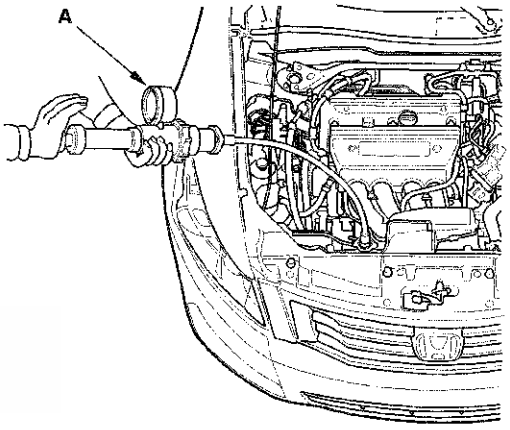

3. Inspect for engine coolant leaks and a drop in pressure.
4. Check for engine oil in the coolant and/or coolant in the engine oil.
5. Remove the tester, and reinstall the radiator cap.

Fan Motor Test

1. Disconnect the 2P connectors from the radiator fan motor and the A/C condenser fan motor.

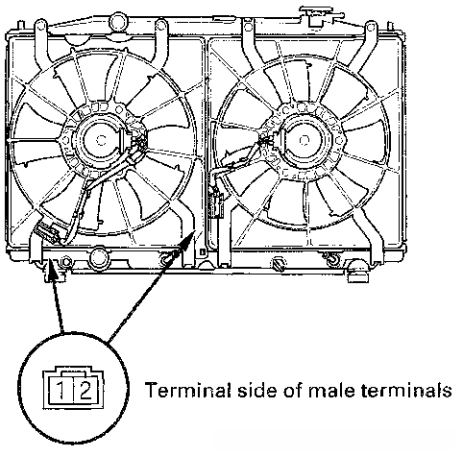

2. Test the motor by connecting battery power to terminal No. 2 and ground to terminal No. 1.

3. If the motor fails to run or does not run smoothly, replace it (see page 10-13).

Thermostat Test

Replace the thermostat if it is stuck in the open position at room temperature.

To test a closed thermostat:

1. Suspend the thermostat (A) in a container of water. Do not let the thermostat and the thermometer (B) touch the bottom of the hot container.

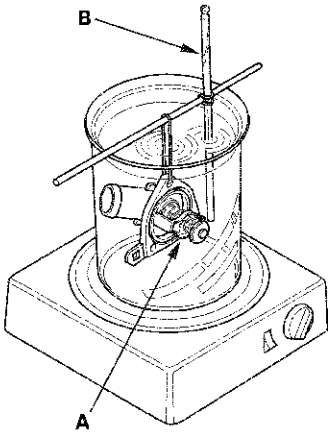

2. Heat the water, and check the temperature with a thermometer. Check the temperature at when the thermostat first opens, then check the temperature again when the thermostat is fully open.

3. Measure the lift height of the thermostat when it is fully open. If the thermostat is not within the specification, replace it.

Standard Thermostat

Lift Height:	**Above 8.0 mm (0.31 in.)**
Starts Opening:	**169—176 °F (76—80 °C)**
Fully Open:	**194 °F (90 °C)**

Water Pump Inspection

1. Remove the drive belt (see page 4-30).

2. Turn the water pump pulley counterclockwise, and check that it turns freely and smoothly. If it does not turn smoothly, replace the water pump (see page 10-5).

   NOTE: When you check the water pump, you may see a small amount of "weeping" from the bleed holes (A). This is normal.

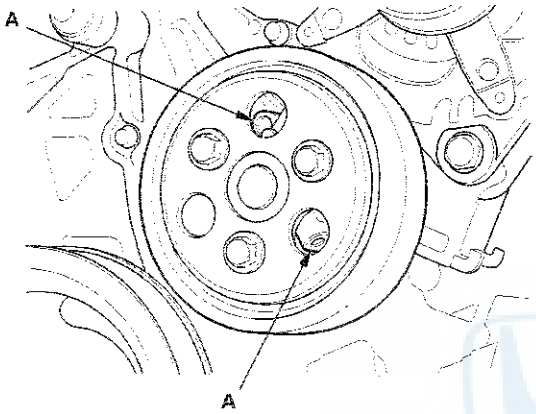

3. Install the drive belt (see page 4-30).

Water Pump Replacement

1. Remove the drive belt (see page 4-30).

2. Drain the engine coolant (see page 10-6).

3. Remove the tensioner pulley (see page 4-32).

4. Remove the water pump pulley (A).

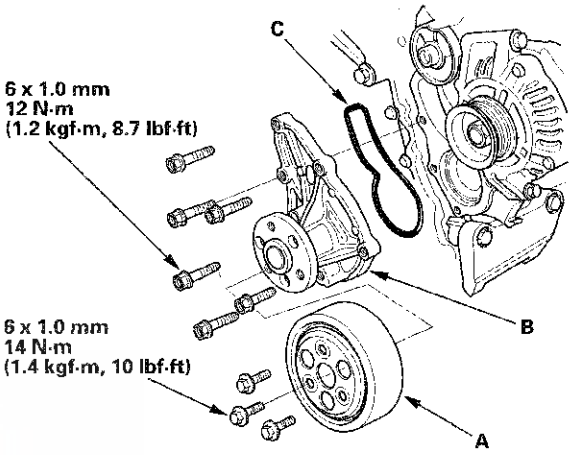

5. Remove the six bolts securing the water pump, then remove the water pump (B).

6. Inspect and clean the O-ring groove and the mating surface of the water passage.

7. Install the water pump with a new O-ring (C) and the water pump pulley.

8. Clean up any spilled engine coolant.

9. Install the tensioner pulley (see page 4-32).

10. Install the drive belt (see page 4-30).

11. Refill the radiator with engine coolant, and bleed the air from the cooling system with the heater valve open (see step 6 on page 10-6).

Coolant Check

1. Check the coolant level in the coolant reservoir. Make sure it is between the MAX mark (A) and MIN mark (B).

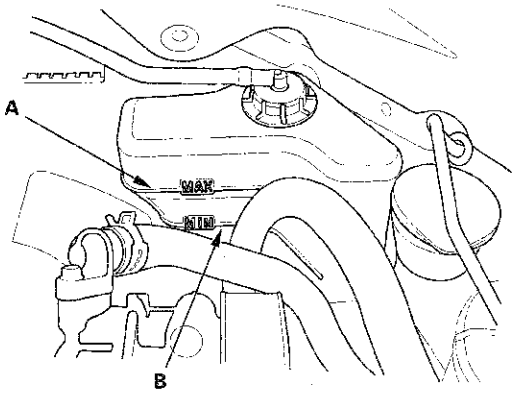

2. If the coolant level in the coolant reservoir is at or below the MIN mark, add coolant to bring it up to the MAX mark, then inspect the cooling system for leaks.

Coolant Replacement

1. Wait until the engine is cool, then carefully remove the radiator cap.

2. Start the engine. Set the heater temperature control dial to maximum heat, then turn the ignition switch to LOCK (0). Make sure the engine and the radiator are cool to the touch.

3. Loosen the drain plug (A), and drain the coolant.

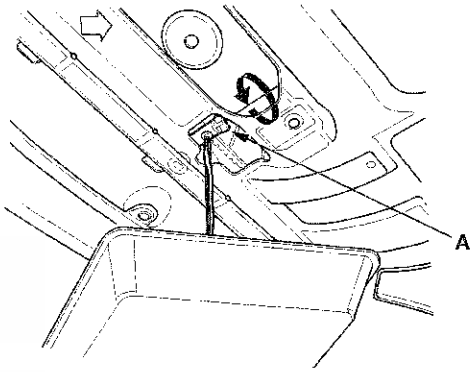

4. After the coolant has drained, tighten the radiator drain plug securely.

5. Remove, drain, and reinstall the coolant reservoir.

6. Fill the coolant reservoir to the MAX mark (A) with Honda Long Life Antifreeze/Coolant Type 2 (P/N OL999-9011).

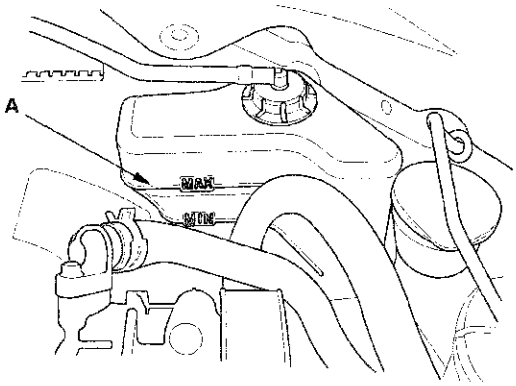

7. Pour Honda Long Life Antifreeze/Coolant Type 2 into the radiator up to the base of the filler neck.

NOTE:
- Always use Honda Long Life Antifreeze/Coolant Type 2. Using a non-Honda coolant can result in corrosion, causing the cooling system to malfunction or fail.
- Honda Long Life Antifreeze/Coolant Type 2 is a mixture of 50 % antifreeze and 50 % water. Do not add water.
- If the vehicle is regularly driven in very low temperatures (under −31 °F, −35 °C) a 60 % concentration of coolant should be used. To accomplish this, pour 1.6 L (0.4 US gal) of Honda Extreme Cold Weather Antifreeze/Coolant Type 2 (P/N OL999-9020) into the radiator first, then add Honda Long Life antifreeze/Coolant Type 2 until the radiator is full.

Engine Coolant Refill Capacities (Including the coolant reservoir capacity of 0.68 L (0.180 US gal))
At Coolant Change:

	DENSO	TRAD
M/T model	6.1 L (1.61 US gal)	6.0 L (1.59 US gal)
A/T model	6.0 L (1.59 US gal)	5.9 L (1.56 US gal)

After Engine Overhaul:

	DENSO	TRAD
M/T model	8.2 L (2.17 US gal)	8.1 L (2.14 US gal)
A/T model	8.1 L (2.14 US gal)	8.0 L (2.11 US gal)

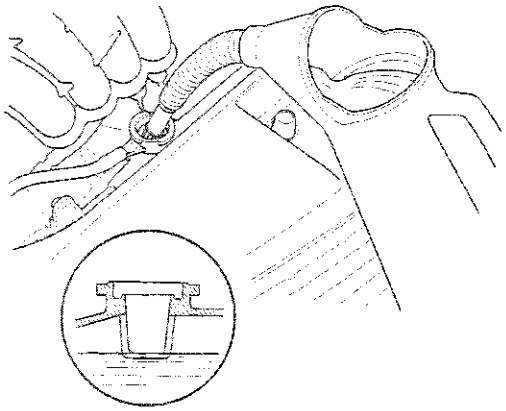

8. Loosely install the radiator cap.

9. Set the heater temperature control dial to maximum heat.

10. Start the engine, and let it run until it warms up (the radiator fan comes on at least twice).

11. Turn off the engine. Check the level in the radiator, and add Honda Long Life Antifreeze/Coolant Type 2, if needed.

12. Install the radiator cap securely, then start the engine again, and check for leaks.

13. Clean up any spilled engine coolant.

14. If the maintenance minder required engine coolant replacement, reset the maintenance minder (see page 3-6), and this procedure is complete. If the maintenance minder did not require engine coolant replacement, go to step 15.

15. Turn the ignition switch to LOCK (0).

16. Connect the Honda Diagnostic System (HDS) to the data link connector (DLC) (see step 2 on page 11-3).

17. Turn the ignition switch to ON (II).

18. Make sure the HDS communicates with the vehicle and the engine control module (ECM)/powertrain control module (PCM). If it does not communicate, troubleshoot the DLC circuit (see page 11-192).

19. Select GAUGES in the BODY ELECTRICAL with the HDS.

20. Select ADJUSTMENT in the GAUGES with the HDS.

21. Select SERVICE REMINDER in the ADJUSTMENT with the HDS.

22. Select RESET in the SERVICE REMINDER with the HDS.

23. Select MAINTENANCE SUB ITEM 5 RESET with the HDS.

Thermostat Replacement

1. Drain the engine coolant (see page 10-6).

2. Clean any dirt off the quick connector (A), the thermostat cover, and the lower radiator hose.

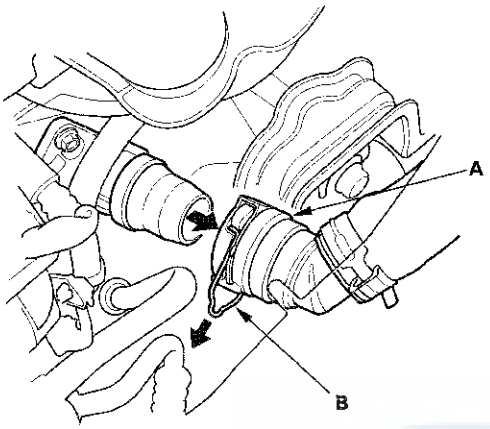

3. Pull out the lock (B) by hand, then wiggle the quick connector loose, and remove it from the thermostat cover. Do not use any tools to remove the quick connector.

4. Remove the thermostat assembly (A).

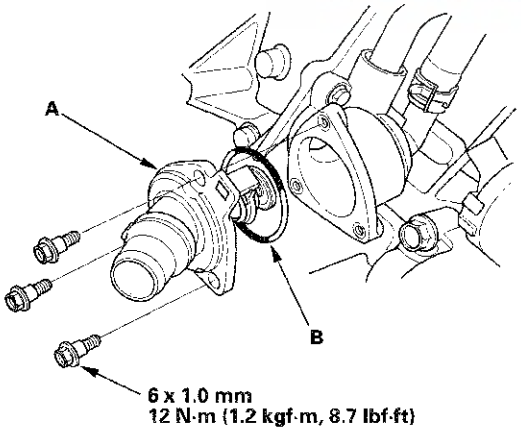

5. Install a new thermostat with a new O-ring (B).

6. Check the quick connector (A) and the set ring (B) for cracks or damage. If the connector and/or the set ring are cracked or damaged, replace the connector.

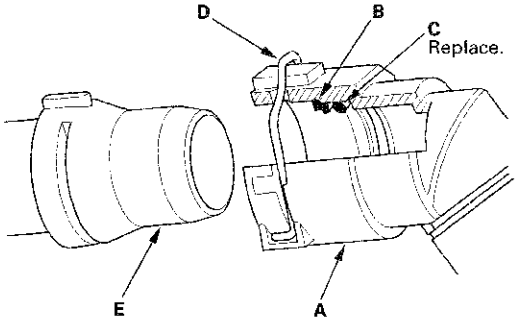

7. Make sure the set ring is in place inside the quick connector. If the set ring is off the connector, replace the quick connector.

8. Replace the O-ring (C) in the quick connector.

9. Check the lock (D). If the lock is damaged or deformed, replace it. When installing the new lock to the connector, push it straight down along the groove.

10. Clean the connecting surface of the thermostat cover (E), then apply clean engine coolant around the connecting surface.

11. Push the lock (A) down, then push the quick connector (B) onto the thermostat cover until you hear it click.

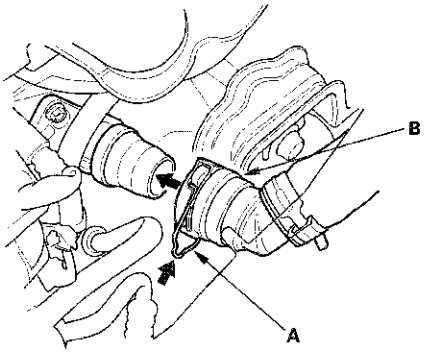

12. Refill the radiator with engine coolant, and bleed the air from the cooling system with the heater valve open (see step 6 on page 10-6).

13. Clean up any spilled engine coolant.

Water Passage Replacement

1. Drain the engine coolant (see page 10-6).

2. Remove the splash shield (see step 25 on page 5-5).

3. Clean any dirt off the quick connector (A), the thermostat cover, and the lower radiator hose.

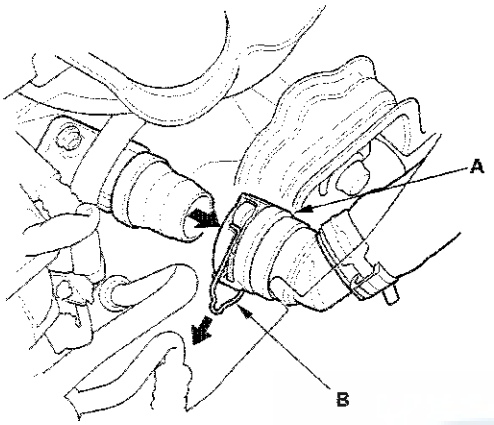

4. Pull out the lock (B) by hand, then wiggle the quick connector loose, and remove it from the thermostat cover. Do not use any tools to remove the quick connector.

5. Remove the A/C compressor without disconnecting the A/C hoses (see step 50 on page 5-9).

6. Remove the alternator (see page 4-32).

7. Remove the drive belt auto-tensioner (see page 4-31).

8. Remove the intake manifold (see page 9-3).

9. Remove the connecting pipe mounting bolts (A) securing the connecting pipe (B).

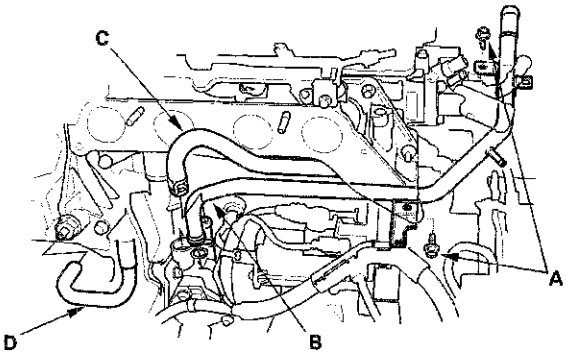

10. Remove the connecting pipe and disconnect the water bypass hose (C) and the positive crankcase ventilation (PCV) hose (D).

11. Remove the water passage (A).

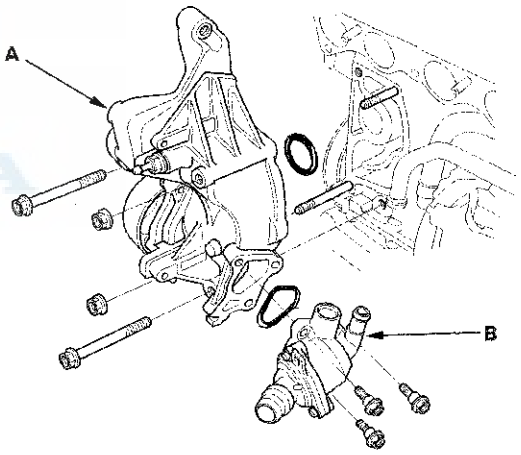

12. Remove the thermostat housing (B).

13. Remove the water pump (see page 10-5).

(cont'd)

Water Passage Replacement (cont'd)

14. Install the water pump (see page 10-5).

15. Install the thermostat housing (A) with a new O-ring (B).

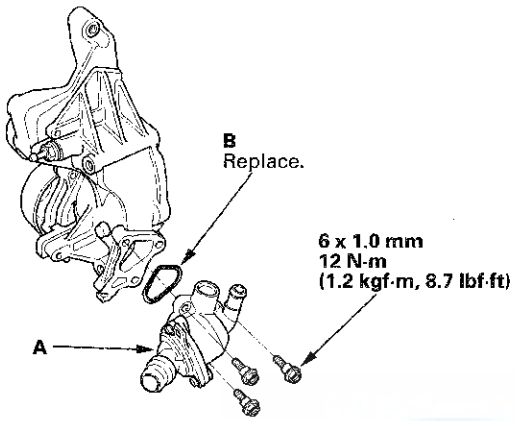

16. Clean and dry the water passage mating surfaces.

17. Apply liquid gasket, P/N 08717-0004, 08718-0001, 08718-0003, or 08718-0009, evenly to the engine block mating surface of the water passage, and to the inside of the threaded bolt holes. Install the component within 5 minutes of applying the liquid gasket.

    NOTE:
    - If you apply liquid gasket P/N 08718-0012, the component must be installed within 4 minutes.
    - If too much time has passed after applying the liquid gasket, remove the old liquid gasket and residue, then reapply new liquid gasket.

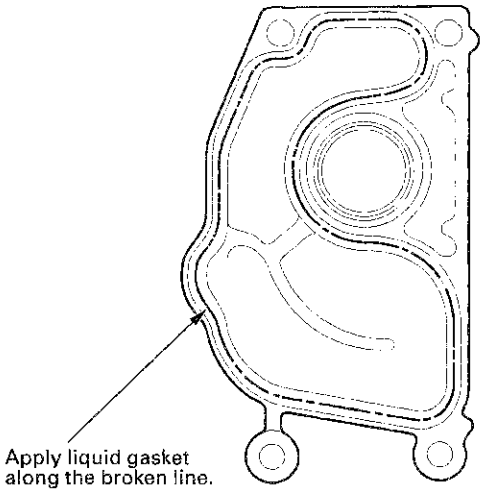

18. Install the water passage (A) with a new O-ring (B).

    NOTE:
    - Wait at least 30 minutes before filling the engine with coolant.
    - Do not run the engine for at least 3 hours after installing the water passage.

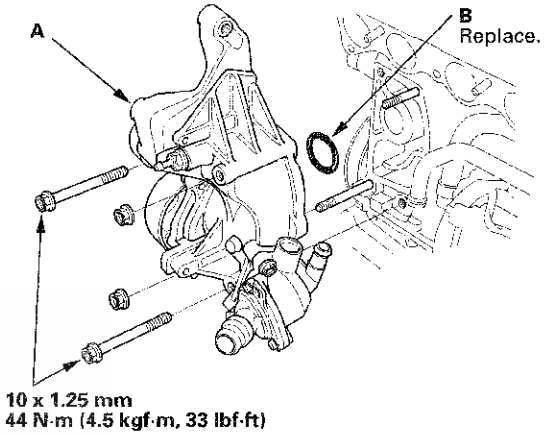

19. Connect the water bypass hose (A) and the PCV hose (B).

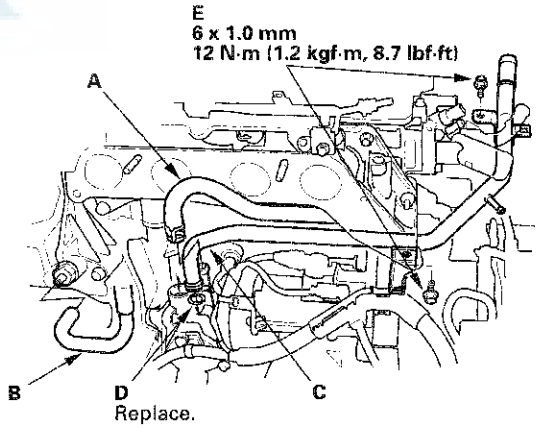

20. Install the connecting pipe (C) with a new O-ring (D), then tighten the connecting pipe mounting bolts (E) securing the connecting pipe.

21. Install the intake manifold (see page 9-5).

22. Install the drive belt auto-tensioner (see page 4-31).

23. Install the alternator (see page 4-33).

24. Install the A/C compressor (see step 42 on page 5-19).

25. Install the splash shield (see step 48 on page 5-20).

26. Check the quick connector (A) and the set ring (B) for cracks or damage. If the connector and/or the set ring are cracked or damaged, replace the connector.

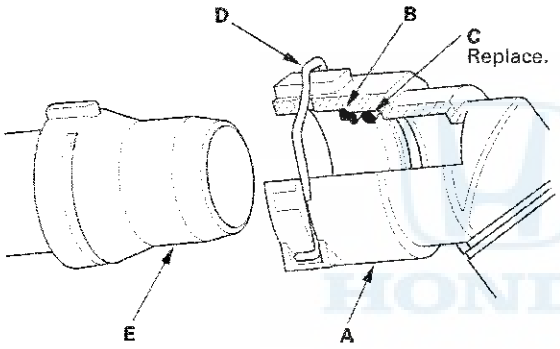

27. Make sure the set ring is in place inside the quick connector. If the set ring is off the connector, replace the quick connector.

28. Replace the O-ring (C) in the quick connector.

29. Check the lock (D). If the lock is damaged or deformed, replace it. When installing the new lock on the connector, push it straight down along the groove.

30. Clean the connecting surface of the thermostat cover (E), then apply clean engine coolant around the connecting surface.

31. Push the lock (A) down, then push the quick connector (B) onto the thermostat cover until you hear it click.

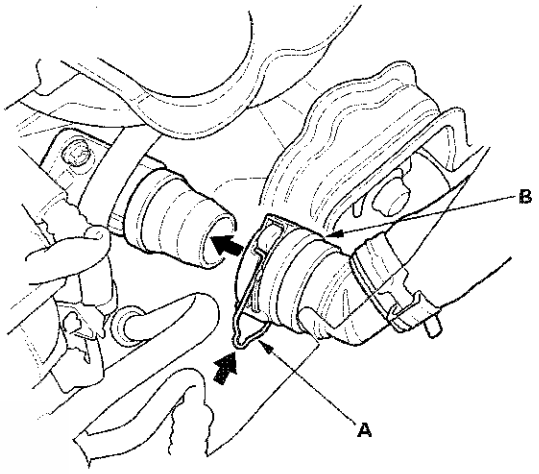

32. Refill the radiator with engine coolant, and bleed the air from the cooling system with the heater valve open (see step 6 on page 10-6).

33. Clean up any spilled engine coolant.

Water Outlet Removal and Installation

1. Drain the engine coolant (see page 10-6).

2. Disconnect the breather pipe (A), then remove the intake air duct (B).

   NOTE: When tightening the screw of the hose band (C), align the edge of the hose band (D) with the mark (E) painted on the hose band. If you tighten the screw over the mark, replace the hose band.

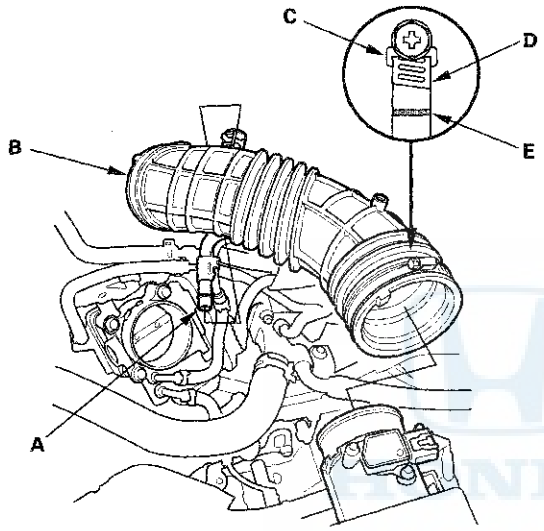

3. Disconnect the upper radiator hose (A), the heater hose (B), and the water bypass hose (C).

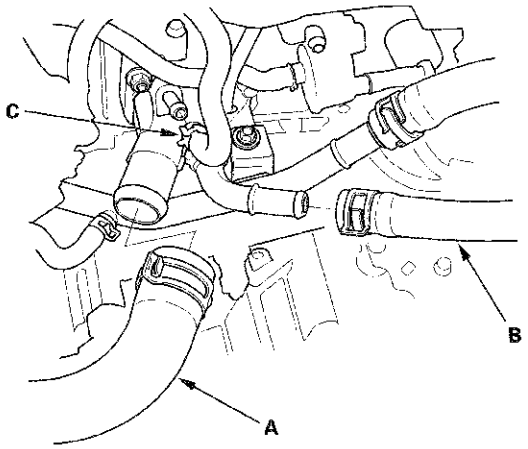

4. Remove the intake manifold (see page 9-3).

5. Remove the connecting pipe mounting bolts (A), then remove the connecting pipe (B).

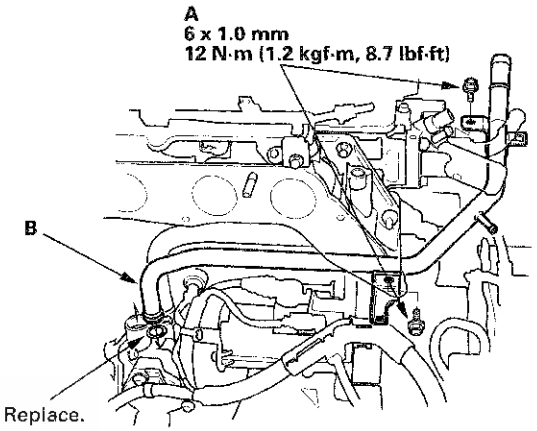

6. Disconnect the engine coolant temperature (ECT) sensor 1 connector (A), then remove the water outlet (B).

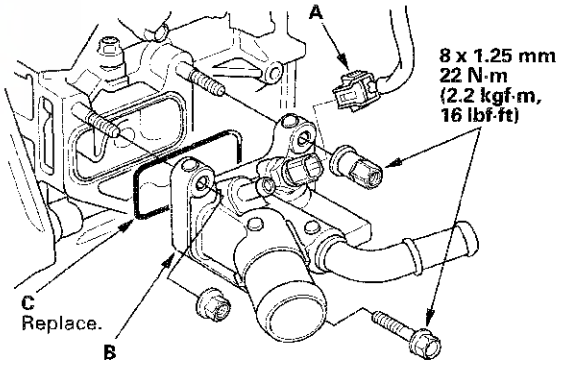

7. Install the water outlet with a new O-ring (C).

8. Install the other parts in the reverse order of removal.

9. Refill the radiator with engine coolant, and bleed the air from the cooling system with the heater valve open (see step 6 on page 10-6).

10. Clean up any spilled engine coolant.

Fan, Fan Motor, and Shroud Removal and Installation

Removal

1. Do the battery removal procedure (see page 22-90).

2. Remove the harness clamps, then remove the battery base (see step 8 on page 5-3).

3. Remove the front grille cover:

   - 2-door (see page 20-257)
   - 4-door (see page 20-257)

4. Remove the water separator (A) and the intake air duct (B).

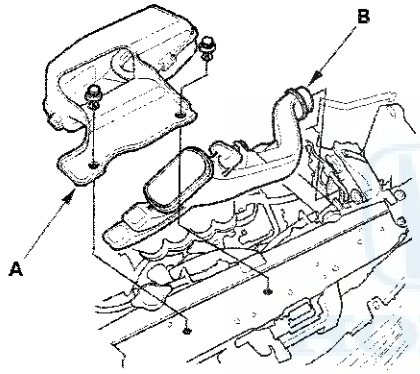

5. Remove the coolant reservoir.

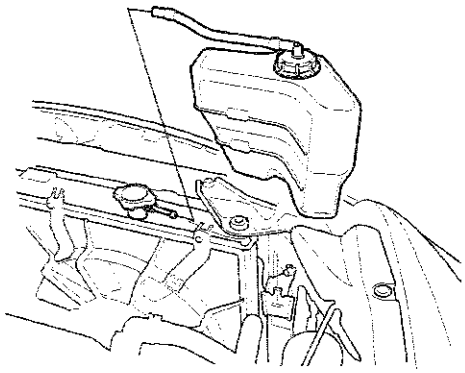

6. Disconnect the fan motor connectors (A), then remove the harness clamp (B).

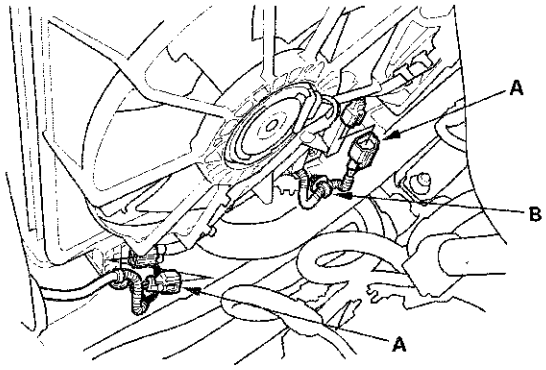

7. Remove the A/C condenser fan shroud assembly (A), then remove the radiator fan shroud assembly (B).

   NOTE: Move the radiator fan shroud assembly toward the right side of the vehicle to allow enough space to lift it up and away from the A/C condenser fan shroud assembly.

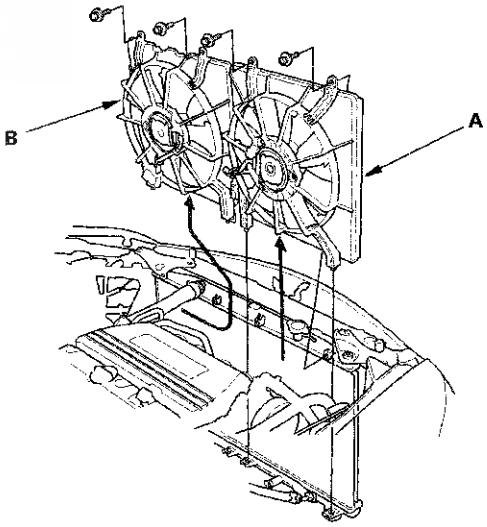

(cont'd)

Fan, Fan Motor, and Shroud Removal and Installation (cont'd)

8. Disassemble the fan shrouds.

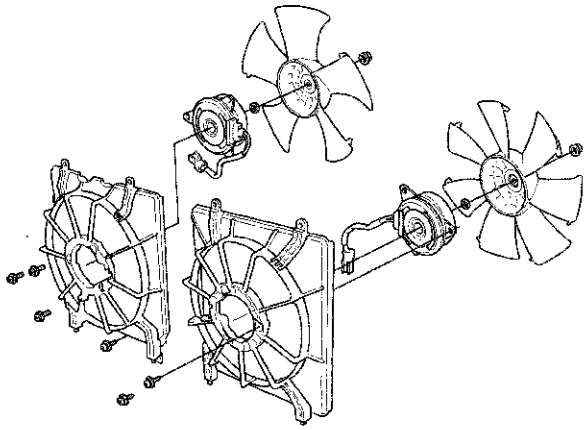

Installation

1. Reassemble the fan shrouds.

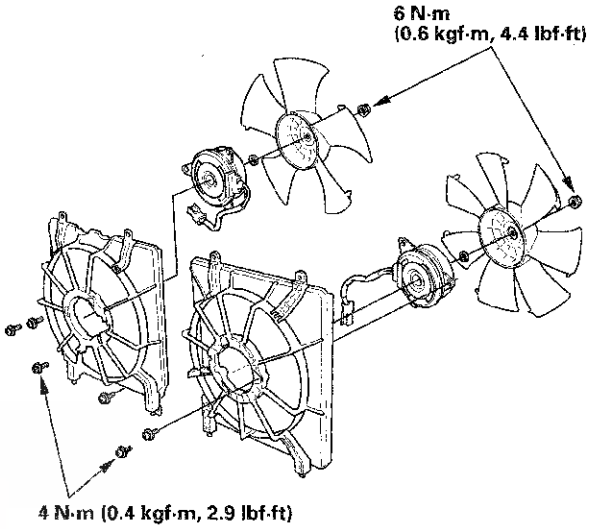

2. Install the radiator fan shroud assembly (A), then install the A/C condenser fan shroud assembly (B).

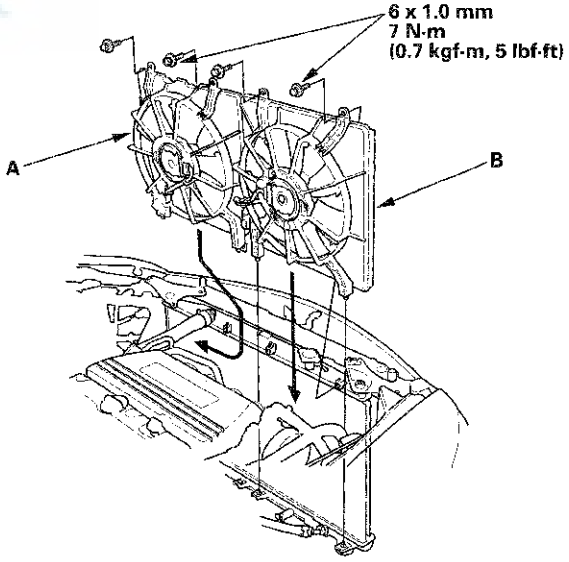

3. Connect the fan motor connectors (A), then install the harness clamp (B).

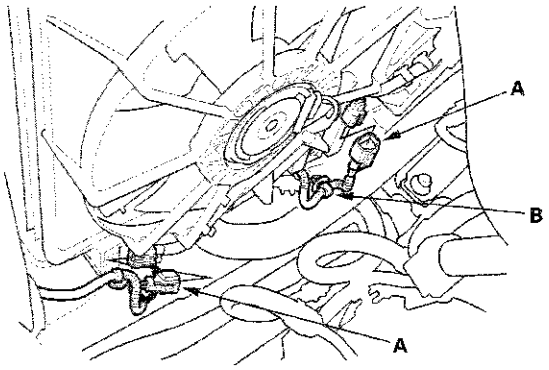

4. Install the coolant reservoir.

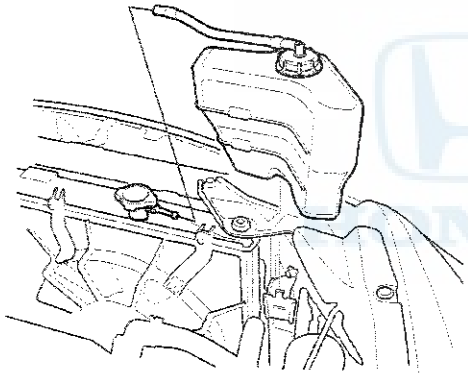

5. Install the water separator (A) and the intake air duct (B).

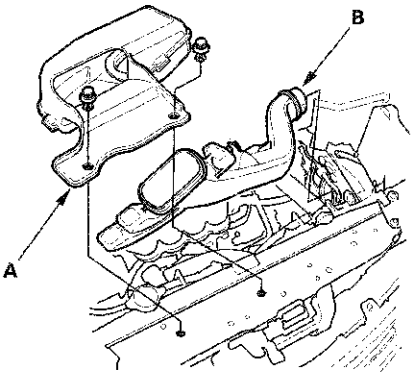

6. Install the front grille cover:

   - 2-door (see page 20-257)
   - 4-door (see page 20-257)

7. Install the battery base, then install the harness clamps (see step 64 on page 5-22).

8. Do the battery installation procedure (see page 22-90).

Radiator Replacement

1. Do the battery removal procedure (see page 22-90).
2. Remove the harness clamps, then remove the battery base (see step 8 on page 5-3).
3. Remove the front grille cover:
   - 2-door (see page 20-257)
   - 4-door (see page 20-257)
4. Remove the water separator (A) and the intake air duct (B).

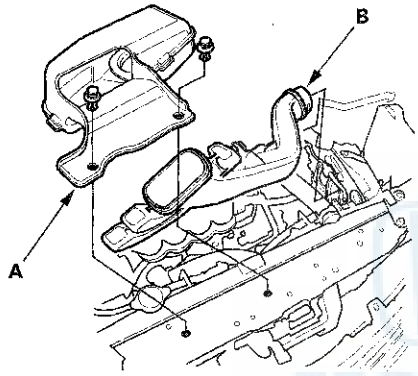

5. Drain the engine coolant (see page 10-6).
6. Remove the splash shield (see step 25 on page 5-5).
7. A/T model: Disconnect the automatic transmission fluid (ATF) cooler hoses (A) (see page 14-260), then plug the cooler hose and the lines.

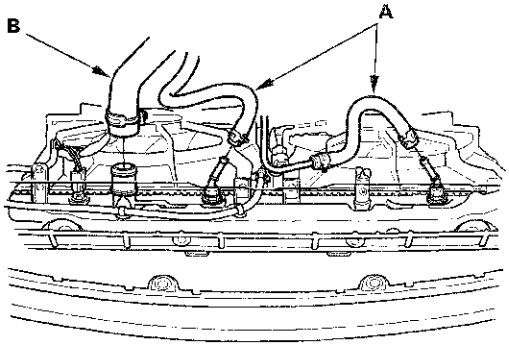

8. Disconnect the lower radiator hose (B) from the radiator.
9. Disconnect the fan motor connectors (A) and engine coolant temperature (ECT) sensor 2 connector (B), then remove the harness clamps (C).

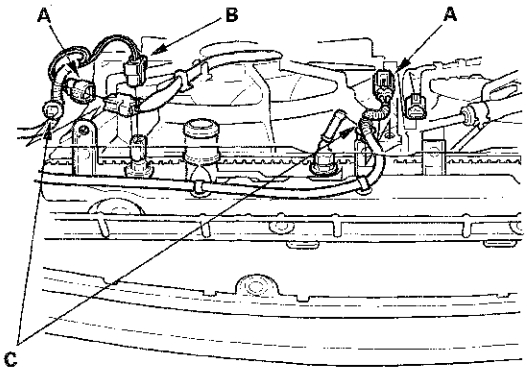

10. Disconnect the upper radiator hose (A) and remove the upper brackets (B) and the coolant reservoir (C).

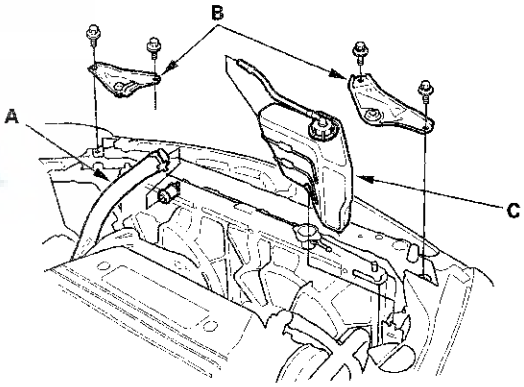

11. Remove the radiator.

12. Remove the fan shroud assemblies from the radiator.

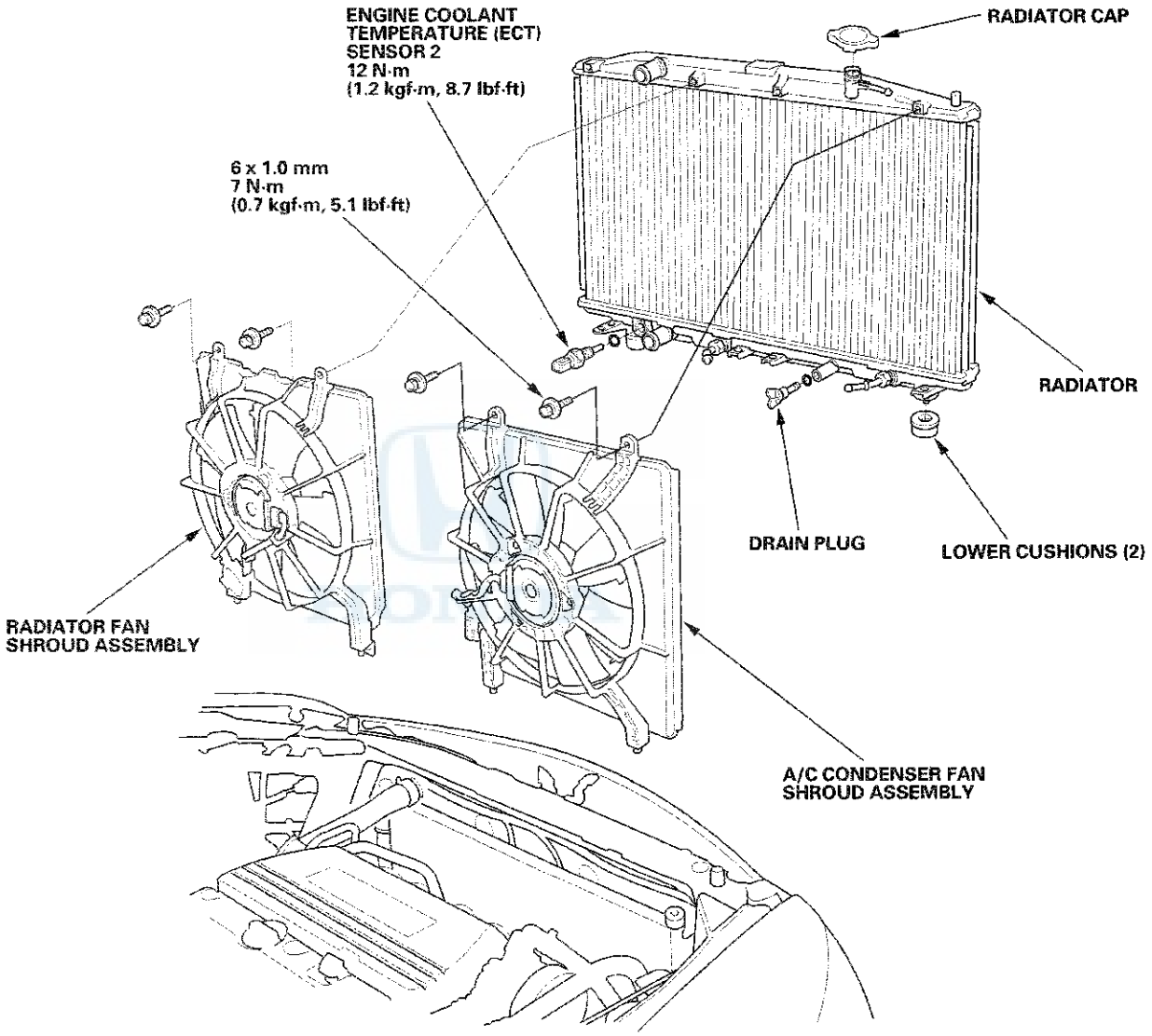

13. Install the radiator in the reverse order of removal. Make sure the upper and lower cushions (4) are set securely.

14. Do the battery installation procedure (see page 22-90).

15. Fill the radiator with engine coolant, and bleed the air from the cooling system with the heater valve open (see step 6 on page 10-6).

16. Clean up any spilled engine coolant.

Component Location Index

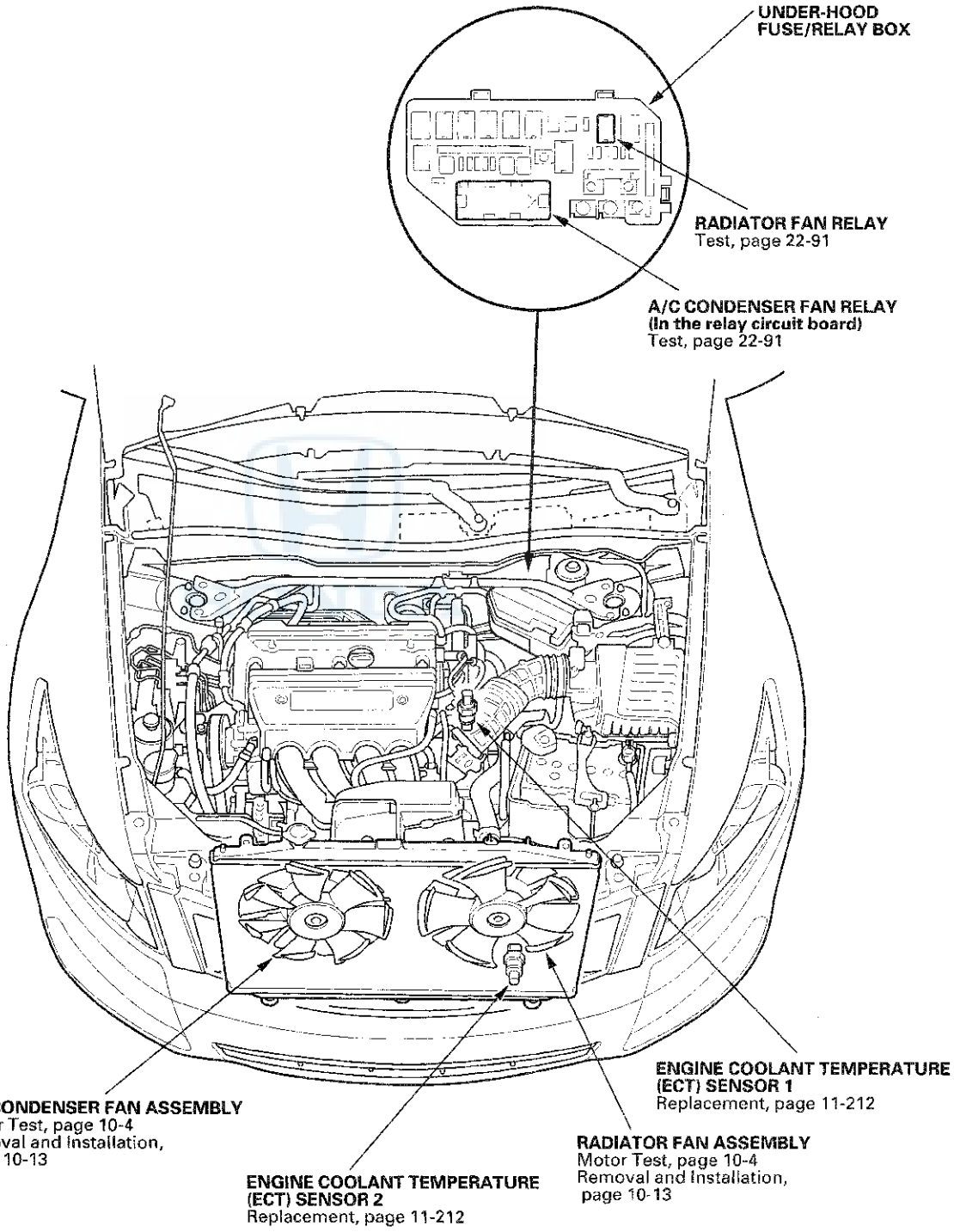

Symptom Troubleshooting Index

Symptom	Diagnostic procedure	Also check for
Engine overheats	1. Check the coolant level. 2. Check for engine coolant leaks (from gaskets, hoses, O-rings, etc.). 3. Check for dirt, leaves, or insects on radiator and A/C condenser. 4. Check for deteriorated coolant. 5. Check for damaged or deformed fan shroud. 6. Inspect the fan motors (see page 10-4) or radiator fan relay (see page 22-91). 7. Check the radiator cap (see page 10-3). 8. Check the thermostat (see page 10-4). 9. Inspect the water pump (see page 10-5). 10. Check for clogged or deteriorated radiator hoses. 11. Check for clogged heater core or hoses. 12. Check for a damaged cylinder head gasket.	Proper radiator and condenser fan control and operation
The radiator fan does not run at all	1. Check for PGM-FI DTCs (see page 11-3). 2. Radiator fan circuit troubleshooting (see page 10-21).	Cleanliness and tightness of all connectors
The A/C condenser fan does not run at all	A/C condenser fan circuit troubleshooting (see page 21-47).	• General troubleshooting (see page 21-10) • Cleanliness and tightness of all connectors

HONDA

Circuit Diagram

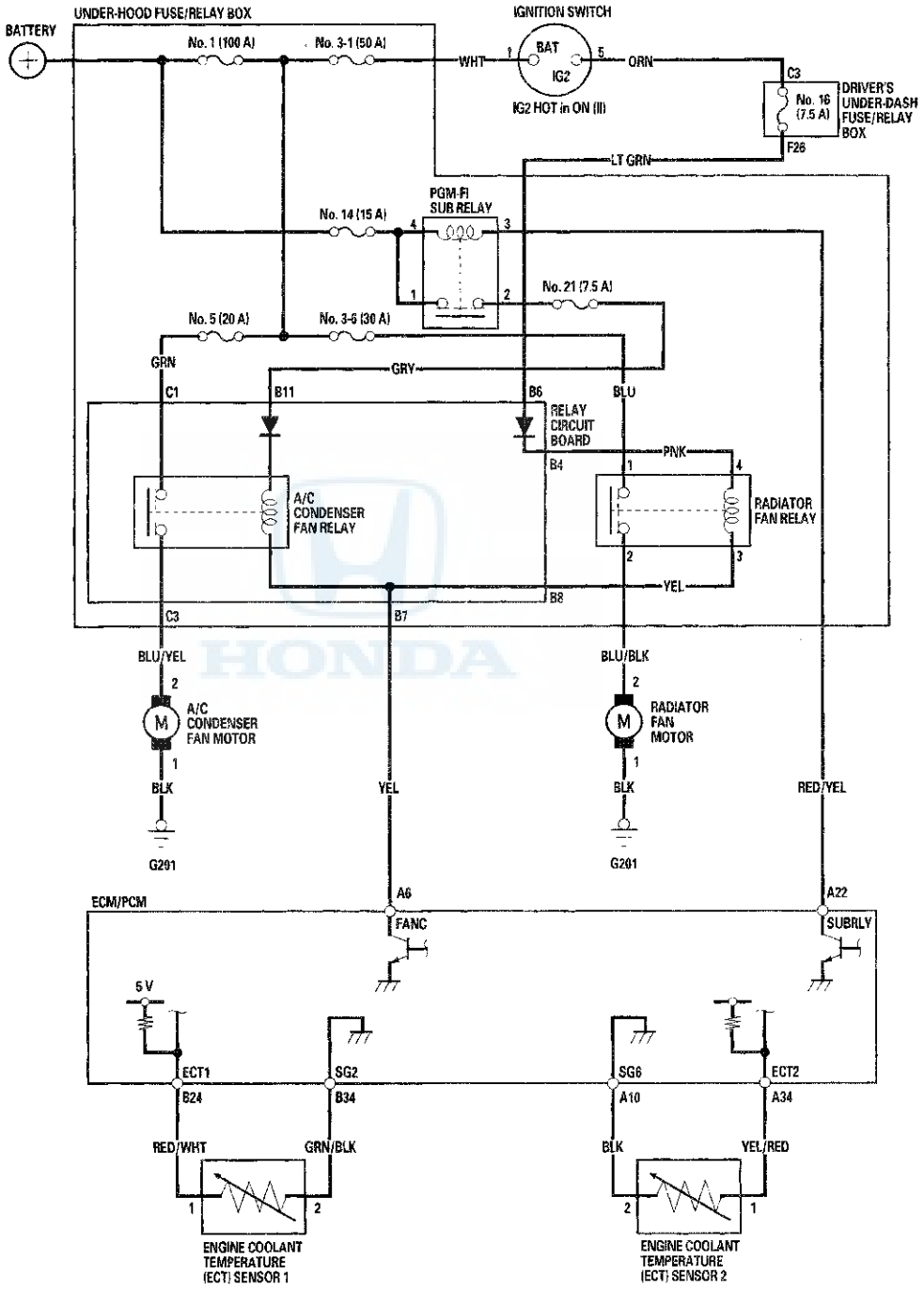

Radiator Fan Circuit Troubleshooting

1. Check the No. 3—6 (30 A) fuse in the under-hood fuse/relay box and No. 16 (7.5 A) fuse in the driver's under-dash fuse/relay box.

   Are the fuses OK?

   YES—Go to step 2.

   NO—Replace the fuse(s) and recheck. If the fuse continues to blow, locate and repair the short in the circuit between the under-hood fuse/relay box and the radiator fan motor and driver's under-dash fuse/relay box connector terminal F26 and under-hood fuse/relay box connector terminal B6.

2. Remove the radiator fan relay and disconnect and remove the relay circuit board from the under-hood fuse/relay box, and test it (see page 22-91).

   Is the relay and/or the relay circuit board OK?

   YES—Go to step 3.

   NO—Replace the radiator fan relay and/or the relay circuit board. ■

3. Measure the voltage between radiator fan relay 4P socket terminal No. 1 and body ground.

RADIATOR FAN RELAY 4P SOCKET

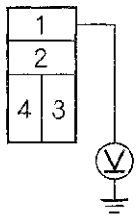

Terminal side of female terminals

   Is there battery voltage?

   YES—Go to step 4.

   NO—Replace the under-hood fuse/relay box. ■

4. Connect radiator fan relay 4P socket terminals No. 1 and No. 2 with a jumper wire.

RADIATOR FAN RELAY 4P SOCKET

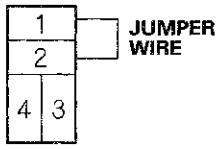

Terminal side of female terminals

   Does the radiator fan run?

   YES—Go to step 9.

   NO—Go to step 5.

5. Test the radiator fan motor (see page 10-4).

   Is the motor OK?

   YES—Go to step 6.

   NO—Replace the radiator fan motor (see page 10-13).

(cont'd)

Radiator Fan Circuit Troubleshooting (cont'd)

6. Disconnect the radiator fan motor 2P connector.

7. Check for continuity between radiator fan relay 4P socket terminal No. 2 and radiator fan motor 2P connector terminal No. 2.

RADIATOR FAN RELAY 4P SOCKET

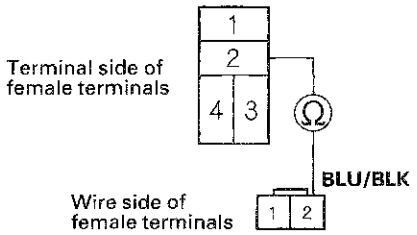

RADIATOR FAN MOTOR 2P CONNECTOR

Is there continuity?

YES—Go to step 8.

NO—Repair open in the wire between the under-hood fuse/relay box and radiator fan motor 2P connector terminal No. 2. ■

8. Check for continuity between radiator fan motor 2P connector terminal No. 1 and body ground.

RADIATOR FAN MOTOR 2P CONNECTOR

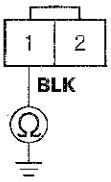

Wire side of female terminals

Is there continuity?

YES—Check for poor connections or loose terminals at the under-hood fuse/relay box, the radiator fan motor and body ground G201. ■

NO—Repair open in the wire between radiator fan motor 2P connector terminal No. 1 and body ground. If the wire is OK, check for a poor ground at G201. ■

9. Disconnect the jumper, and turn the ignition switch to ON (II). Check for voltage between radiator fan relay 4P socket terminal No. 4 and body ground.

RADIATOR FAN RELAY 4P SOCKET

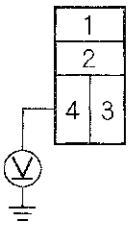

Terminal side of female terminals

Is there battery voltage?

YES—Go to step 10.

NO—Repair open in the wire between the under-hood fuse/relay box and the driver's under-dash fuse/relay box. ■

10. Disconnect under-hood fuse/relay box connector B (14P).

11. Check for continuity between radiator fan relay 4P socket terminal No. 3 and under-hood fuse/relay box connector terminal B8.

RADIATOR FAN RELAY 4P SOCKET
Terminal side of female terminals

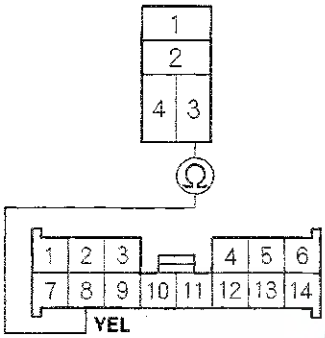

UNDER-HOOD FUSE/RELAY BOX CONNECTOR B (14P)
Wire side of female terminals

Is there continuity?

YES—Go to step 12.

NO—Repair open in the wire between radiator fan relay 4P socket terminal No. 3 and under-hood fuse/relay box connector terminal B8.

12. Turn the ignition switch to LOCK (0).

13. Connect the Honda Diagnostic System (HDS) to the data link connector (DLC) (see step 2 on page 11-3).

14. Turn the ignition switch to ON (II).

15. Make sure the HDS communicates with the vehicle and the engine control module (ECM)/powertrain control module (PCM). If it does not communicate, troubleshoot the DLC circuit (see page 11-192).

16. Jump the SCS line with the HDS, then turn the ignition switch to LOCK (0).

    NOTE: This step must be done to protect the ECM/PCM from damage.

17. Disconnect ECM/PCM connector A (49P), then check for continuity between under-hood fuse/relay box connector terminal B7 and ECM/PCM connector terminal A6.

UNDER-HOOD FUSE/RELAY BOX CONNECTOR B (14P)
Wire side of female terminals

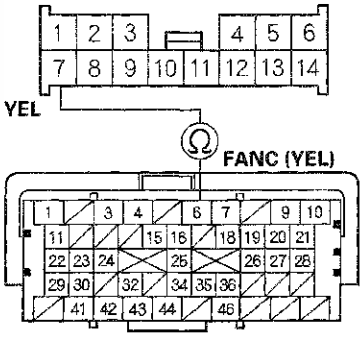

ECM/PCM CONNECTOR A (49P)
Terminal side of female terminals

Is there continuity?

YES—Update the ECM/PCM if it does not have the latest software (see page 11-215), or substitute a known-good ECM/PCM (see page 11-7), then recheck . If the symptom/indication goes away with a known good ECM/PCM, replace the original ECM/PCM (see page 11-216).■

NO—Repair open in the wire between ECM/PCM connector terminal A6 and under-hood fuse/relay box connector terminal B7.■

HONDA

Navigation Tools: Click on the "Table of Contents" below, or use the Bookmarks to the left.

Fuel and Emissions

Fuel and Emissions Systems
Special Tools 11-2
General Troubleshooting Information 11-3
DTC Troubleshooting Index 11-9
Symptom Troubleshooting Index 11-13
System Description 11-15
How to Set Readiness Codes 11-62

PGM-FI System
Component Location Index 11-65
DTC Troubleshooting 11-67
F-CAN Circuit Troubleshooting 11-182
MIL Circuit Troubleshooting 11-191
DLC Circuit Troubleshooting 11-192
Injector Replacement 11-207
A/F Sensor Replacement 11-209
Secondary HO2S Replacement 11-209
CMP Sensor B Replacement 11-210
CKP Sensor Replacement 11-210
MAP Sensor Replacement 11-211
MAF Sensor/IAT Sensor Replacement 11-211
ECT Sensor 1 Replacement 11-212
ECT Sensor 2 Replacement 11-212
Output Shaft (Countershaft) Speed Sensor Replacement 11-213
Knock Sensor Replacement 11-213
ELD Replacement 11-214
ECM/PCM Update 11-215
ECM/PCM Replacement 11-216

Electronic Throttle Control System
Component Location Index 11-219
DTC Troubleshooting 11-220
APP Sensor Signal Inspection 11-258
Accelerator Pedal Module Removal/Installation 11-259

VTEC/VTC
Component Location Index 11-260
DTC Troubleshooting 11-261
VTC Oil Control Solenoid Valve Removal/Test/Installation 11-300
CMP Sensor A Replacement 11-301
Rocker Arm Oil Control Valve Removal/Installation 11-302
Rocker Arm Oil Pressure Switch Removal/Installation 11-304
Rocker Arm Oil Pressure Switch A Removal/Installation 11-305
Rocker Arm Oil Pressure Switch B Removal/Installation 11-305

Idle Control System
Component Location Index 11-306
DTC Troubleshooting 11-307
A/C Signal Circuit Troubleshooting 11-310
Alternator FR Signal Circuit Troubleshooting 11-311
PSP Switch Signal Circuit Troubleshooting 11-312
Brake Pedal Position Switch Signal Circuit Troubleshooting 11-314
Idle Speed Inspection 11-316
ECM/PCM Idle Learn Procedure 11-317

Fuel Supply System
Component Location Index 11-318
DTC Troubleshooting 11-320
Fuel Pump Circuit Troubleshooting 11-326
Fuel Pressure Relieving 11-332
Fuel Pressure Test 11-335
Fuel Tank Draining 11-335
Fuel Line Inspection 11-336
Fuel Line/Quick-Connect Fitting Precautions 11-339
Fuel Line/Quick-Connect Fitting Removal 11-340
Fuel Line/Quick-Connect Fitting Installation 11-343
Fuel Tank Unit Removal and Installation 11-347
Fuel Pulsation Damper Replacement 11-349
Fuel Pressure Regulator Replacement 11-350
Fuel Filter Replacement 11-350
Fuel Pump/Fuel Gauge Sending Unit Replacement 11-351
Fuel Tank Replacement 11-352
Fuel Fill Pipe Removal/Installation 11-354
Fuel Gauge Sending Unit Test 11-355
Low Fuel Indicator Test 11-356

Intake Air System
Component Location Index 11-357
Throttle Body Test 11-358
Throttle Body Cleaning 11-359
Air Cleaner Removal/Installation 11-359
Air Cleaner Element Inspection/Replacement 11-360
Intake Air Resonator Removal/Installation 11-361
Throttle Body Removal/Installation 11-362
Throttle Body Disassembly/Reassembly 11-363

Catalytic Converter System
Component Location Index 11-364
DTC Troubleshooting 11-365
Warm Up Three Way Catalytic Converter Removal/Installation 11-367
Under-floor Three Way Catalytic Converter Removal/Installation 11-368

PCV System
Component Location Index 11-369
PCV Valve Inspection 11-370
PCV Valve Replacement 11-370

EVAP System
Component Location Index 11-371
DTC Troubleshooting 11-372
Fuel Cap Warning Message System Troubleshooting 11-400
EVAP Canister Replacement 11-402
FTP Sensor Replacement 11-404
EVAP Canister Vent Shut Valve Replacement 11-405
EVAP Canister Purge Valve Replacement 11-405

Special Tools

Ref. No.	Tool Number	Description	Qty
①	07AAA-S0XA100	Fuel Sender Wrench	1
②	07AAJ-S6MA150	Fuel Pressure Gauge Attachment Set	1
③	07JAZ-001000B	Vacuum/Pressure Gauge, 0—4 in.Hg	1
④	07NAJ-P07010A	Pressure Gauge Adapter	1
⑤	07ZAJ-S5AA200	Oil Pressure Hose	1
⑥-1	07406-0020201	A/T Pressure Hose	1
⑥-2	07406-0070301	A/T Low Pressure Gauge W/Panel	1
⑥-3	07MAJ-PY4011A	A/T Pressure Hose, 2,210 mm	1
⑥-4	07MAJ-PY40120	A/T Pressure Adapter	1
⑦	07406-004000B	Fuel Pressure Gauge	1

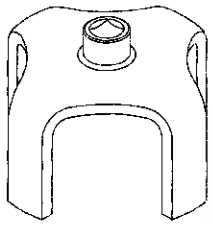

①

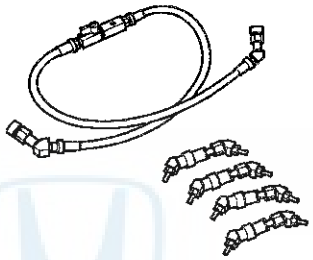

②

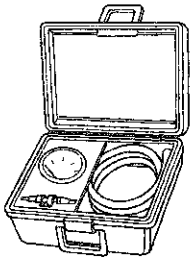

③

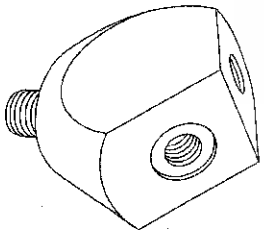

④

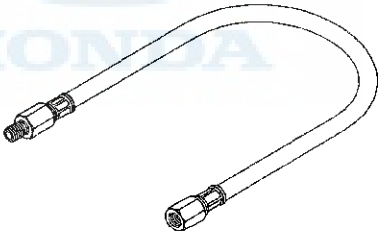

⑤

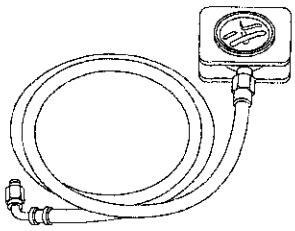

⑥-1, ⑥-2, ⑥-3, ⑥-4

⑦

General Troubleshooting Information

Intermittent Failures

The term intermittent failure means a system may have had a failure, but it checks OK now. If the malfunction indicator lamp (MIL) on the dash does not come on, check for poor connections or loose terminals at all connectors related to the circuit that you are troubleshooting. If the MIL was on but then went out, the original problem may have been intermittent.

Service Information

Periodically, new ECM/PCM software or new service procedures may become available. Always check online for the latest software or service information related to the DTCs or symptoms you are troubleshooting.

Opens and Shorts

Open and short are common electrical terms. An open is a break in a wire or at a connection. A short is an accidental connection of a wire to ground or to another wire. In simple electronics, this usually means something won't work at all. With complex electronics (such as ECMs or PCMs) this can sometimes mean something works, but not the way it's supposed to.

How to Use the HDS (Honda Diagnostic System)

If the MIL (malfunction indicator lamp) has come on

1. Start the engine, and check the MIL (A).

   NOTE: If the ignition switch is turned to ON (II), and the engine is not started, the MIL stays on for 15—20 seconds (see page 11-62).

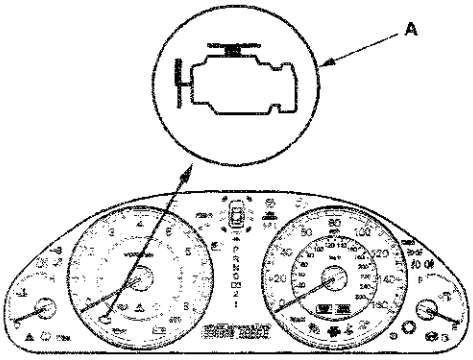

2. If the MIL stays on, connect the HDS to the data link connector (DLC) (A) located under the driver's side of the dashboard.

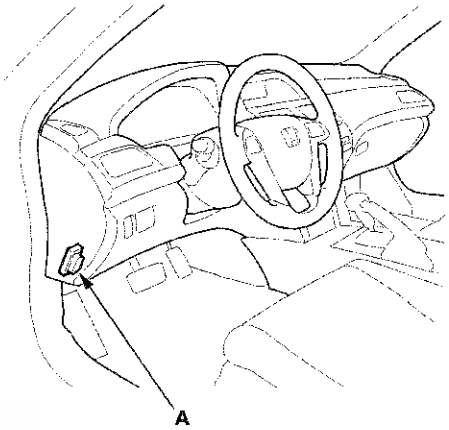

3. Turn the ignition switch to ON (II).

4. Make sure the HDS communicates with the ECM/PCM and other vehicle systems. If it doesn't, go to the DLC circuit troubleshooting (see page 11-192).

5. Check the diagnostic trouble code (DTC) and note it. Also check the freeze data and/or on-board snapshot data, and download any data found. Then refer to the indicated DTC's troubleshooting, and begin the appropriate troubleshooting procedure.

   NOTE:
   - Freeze data indicates the engine conditions when the first system malfunction, misfire, or fuel trim malfunction that activated the MIL was detected.
   - The HDS can read the DTC, freeze data, on-board snapshot, current data, and other engine control module (ECM) or powertrain control module (PCM) data.
   - For specific operations, refer to the user's manual that came with the HDS.

6. If no DTCs are found, go to MIL troubleshooting (see page 11-191).

(cont'd)

General Troubleshooting Information (cont'd)

If the MIL did not stay on
If the MIL did not stay on but there is a driveability problem, do the symptom troubleshooting.

If you can't duplicate the DTC
Some of the troubleshooting requires you to reset the ECM/PCM and try to duplicate the DTC. If the problem is intermittent and you can't duplicate the code, do not continue through the procedure. To do so will only result in confusion and possibly, a needlessly replaced ECM/PCM.

HDS Clear Command

The ECM/PCM stores various specific data to correct the system even if there is no electrical power such as when the battery negative terminal or No. 17 FI MAIN (15 A) fuse are disconnected. Stored data based on failed parts should be cleared by using the CLEAR COMMAND of the HDS, if parts are replaced.

The HDS has three kinds of clear commands to meet this purpose. They are DTC clear, ECM/PCM reset, and CKP pattern clear. DTC clear command erases all stored DTC codes, freeze data, on-board snapshot, and readiness codes. This must be done with the HDS after reproducing the DTC during troubleshooting.
The ECM/PCM reset command erases all stored DTC codes, freeze data, on-board snapshot, readiness codes, and all specific data to correct the system except CKP pattern. If the CKP pattern data in the ECM/PCM was cleared, you must do the CKP pattern learn procedure. The CKP pattern clear command erases only CKP pattern data. This command is for repair of a misfire or the CKP sensor.

Scan Tool Clear Command

If you are using a generic scan tool to clear commands, be aware that there is only one setting for clearing the ECM/PCM, and it clears all commands at the same time (CKP pattern learn, idle learn, readiness codes, freeze data, on-board snapshot, and DTCs). After you clear all commands, you then need to do these procedures, in this order: ECM/PCM idle learn procedure (see page 11-317); CKP pattern learn procedure; test-drive to set readiness codes to complete (see page 11-62).

DTC Clear

1. Clear the DTC with the HDS while the engine is stopped.
2. Turn the ignition switch to LOCK (0).
3. Turn the ignition switch to ON (II), and wait 30 seconds.
4. Turn the ignition switch to LOCK (0), and disconnect the HDS from the DLC.

ECM/PCM Reset

1. Reset the ECM/PCM with the HDS while the engine is stopped.
2. Turn the ignition switch to LOCK (0).
3. Turn the ignition switch to ON (II), and wait 30 seconds.
4. Turn the ignition switch to LOCK (0), and disconnect the HDS from the DLC.
5. Do the ECM/PCM idle learn procedure (see page 11-317).

CKP Pattern Clear/CKP Pattern Learn

Clear/Learn Procedure (with the HDS)

1. Connect the HDS to the data link connector (DLC) (A) located under the driver's side of the dashboard.

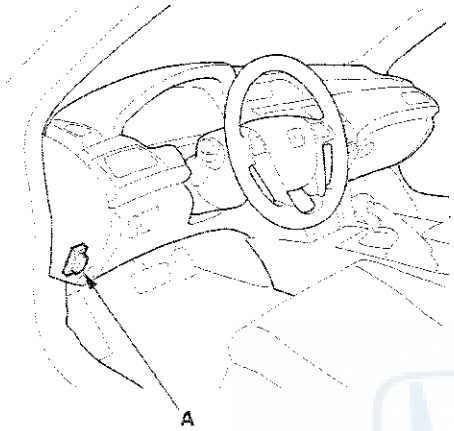

2. Turn the ignition switch to ON (II).
3. Make sure the HDS communicates with the ECM/PCM and other vehicle systems. If it doesn't, go to the DLC circuit troubleshooting (see page 11-192).
4. Select CRANK PATTERN in the ADJUSTMENT MENU with the HDS.
5. Select CRANK PATTERN LEARNING with the HDS, and follow the screen prompts.

Learn Procedure (without the HDS)

1. Start the engine. Hold the engine speed at 3,000 rpm without load (A/T in P or N, M/T in neutral) until the radiator fan comes on.
2. Test-drive the vehicle on a level road: Decelerate (with the throttle fully closed) from an engine speed of 2,500 rpm down to 1,000 rpm with the A/T in 2, or the M/T in 2nd.
3. Repeat step 2 several times.
4. Turn the ignition switch to LOCK (0).
5. Turn the ignition switch to ON (II), and wait 30 seconds.

How to End a Troubleshooting Session (required after any troubleshooting)

1. Reset the ECM/PCM with the HDS.
2. Do the ECM/PCM idle learn procedure (see page 11-317).
3. Turn the ignition switch to LOCK (0).
4. Disconnect the HDS from the DLC.

   NOTE: The ECM/PCM is part of the immobilizer system. If you replace the ECM/PCM, it will have a different immobilizer code. For the engine to start, you must rewrite the immobilizer code with the HDS (immobilizer system section).

(cont'd)

General Troubleshooting Information (cont'd)

How to Troubleshoot Circuits at the ECM/PCM Connectors

NOTE: The ECM/PCM overwrites data and monitors the EVAP system for up to about 40 minutes after the ignition switch is turned to LOCK (0). Jumping the SCS line after turning the ignition switch to LOCK (0) cancels this function. Disconnecting the ECM/PCM during this function, without jumping the SCS line first, can damage the ECM/PCM.

1. Jump the SCS line with the HDS.

2. Remove the bolts (D).

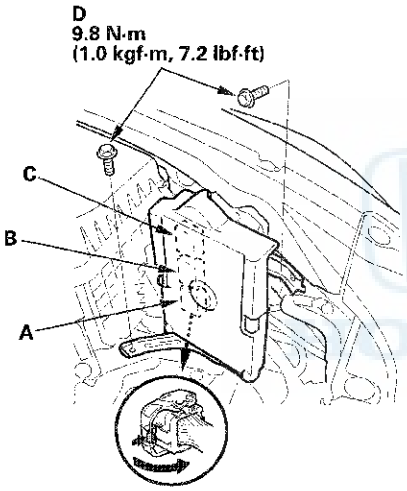

3. Disconnect ECM/PCM connectors A, B, and C.

4. When diagnosis/troubleshooting is done at the ECM/PCM connector, use the terminal test port (A) above the terminal you need to check.

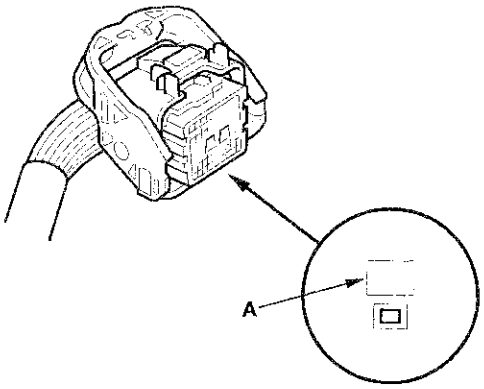

5. Connect one side of the patch cord (A) terminals to a commercially available digital multimeter (B), and connect the other side to a commercially available banana jack (Pomona Electronics Tool No. 3563 or equivalent) (C).

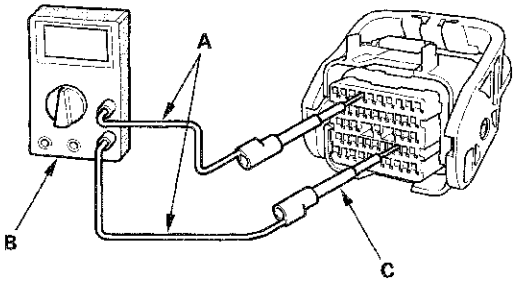

6. Gently contact the pin probe (male) at the terminal test port from the terminal side. Do not force the tips into the terminals.

NOTICE

- For accurate results, always use the pin probe (male).
- To prevent damage to the connector terminals, do not insert test equipment probes, paper clips, or other substitutes as they can damage the terminals. Damaged terminals cause a poor connection and an incorrect measurement.
- Do not puncture the insulation on a wire. Punctures can cause poor or intermittent electrical connections.

Substituting the ECM/PCM

Special Tools Required
- Honda diagnostic system (HDS) tablet tester
- Honda interface module (HIM) and an iN workstation with HDS and CM update software
- HDS pocket tester
- GNA600 and an iN workstation with HDS and CM update software

Use any one of these update tools.

NOTE: Use this procedure when you have to substitute a known-good ECM/PCM during troubleshooting procedure.

1. Connect the HDS to the data link connector (DLC) (A) located under the driver's side of the dashboard.

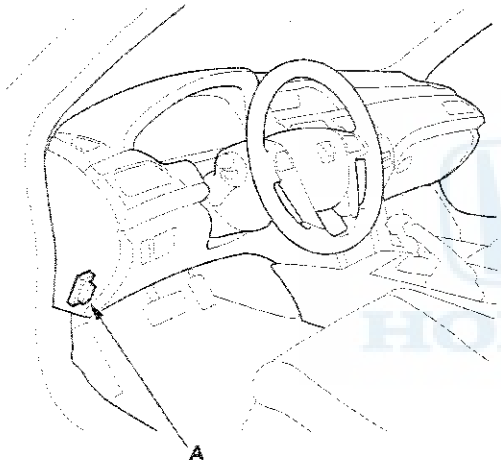

2. Turn the ignition switch to ON (II).

3. Make sure the HDS communicates with the ECM/PCM and other vehicle systems. If it doesn't, go to the DLC circuit troubleshooting (see page 11-192). If you are returning from DLC circuit troubleshooting, skip steps 4 and 5, and the clean the throttle body after substituting the ECM/PCM (see page 11-359).

4. Select the INSPECTION MENU with the HDS.

5. Select the ETCS TEST, then select the TP POSITION CHECK, and follow the screen prompts.

   NOTE: If the TP POSITION CHECK indicates FAILED, continue this procedure.

6. Turn the ignition switch to LOCK (0).

7. Jump the SCS line with the HDS.

8. Do the battery removal procedure (see page 22-90).

9. Remove the bolts (D).

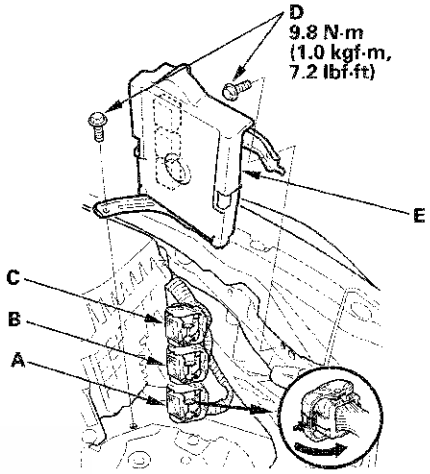

10. Disconnect ECM/PCM connectors A, B, and C, then remove the ECM/PCM assembly (E).

    NOTE: ECM/PCM connectors A, B, and C have symbols (A=□, B=△, C=○) embossed on them for identification.

11. Remove the cover (A) and the bracket (B) from the ECM/PCM (C).

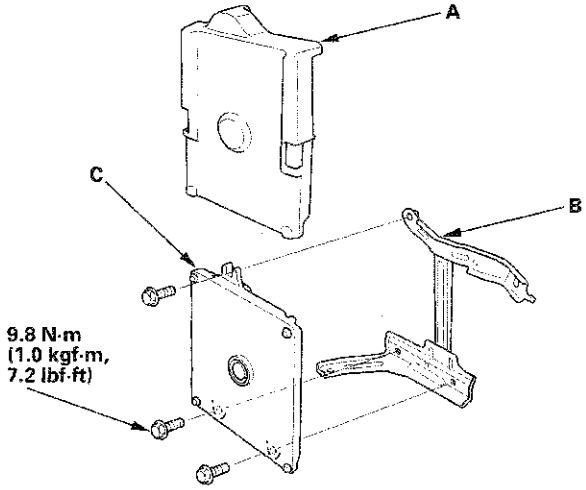

12. Install a known-good ECM/PCM in the reverse order of removal.

(cont'd)

General Troubleshooting Information (cont'd)

13. Do the battery installation procedure (see page 22-90).

14. Turn the ignition switch to ON (II).

    NOTE: DTC P0630 (VIN Not Programmed or Mismatch) may be stored because the VIN has not been programmed into the ECM/PCM; ignore it, and continue this procedure.

15. Manually input the VIN to the ECM/PCM with the HDS.

16. Select the IMMOBI SYSTEM with the HDS.

17. Enter the immobilizer code that you obtained from iN or ISIS using the ECM/PCM replacement procedure in the HDS; this allows you to start the engine.

18. Update the ECM/PCM if it does not have the latest software (see page 11-215).

19. Reset the ECM/PCM with the HDS.

20. If the TP POSITION CHECK failed in step 5, clean the throttle body (see page 11-359).

21. Do the ECM/PCM idle learn procedure (see page 11-317).

22. Do the CKP pattern clear/CKP pattern learn procedure.

OBD Status

The OBD status shows the current system status of each DTC and all of the parameters. This function is used to see if the repair was successfully completed. The results of diagnostic tests for the DTC are displayed as:

- PASSED: The on board diagnosis is successfully finished.
- FAILED: The on board diagnosis has finished but failed.
- EXECUTING: The vehicle is in enable criteria conditions for the DTC and the on board diagnosis is running.
- NOT COMPLETED: The on board diagnosis was running but is out of the enable conditions of the DTC.
- OUT OF CONDITION: The vehicle has stayed out of the enable conditions for the DTC.

DTC Troubleshooting Index

DTC (MIL indication*)	Two Drive Cycle Detection	Detection Item	MIL	Note
P0010 (56)	—	Variable Valve Timing Control (VTC) Oil Control Solenoid Valve Malfunction	ON	(see page 11-261)
P0011 (56)	○	Variable Valve Timing Control (VTC) System Malfunction	ON	(see page 11-264)
P0101 (50)	○	Mass Air Flow (MAF) Sensor Circuit Range/Performance Problem	ON	(see page 11-67)
P0102 (50)	—	Mass Air Flow (MAF) Sensor Circuit Low Voltage	ON	(see page 11-68)
P0103 (50)	—	Mass Air Flow (MAF) Sensor Circuit High Voltage	ON	(see page 11-71)
P0107 (3)	—	Manifold Absolute Pressure (MAP) Sensor Circuit Low Voltage	ON	(see page 11-73)
P0108 (3)	—	Manifold Absolute Pressure (MAP) Sensor Circuit High Voltage	ON	(see page 11-75)
P0111 (10)	○	Intake Air Temperature (IAT) Sensor Circuit Range/Performance Problem	ON	(see page 11-77)
P0112 (10)	○	Intake Air Temperature (IAT) Sensor Circuit Low Voltage	ON	(see page 11-78)
P0113 (10)	○	Intake Air Temperature (IAT) Sensor Circuit High Voltage	ON	(see page 11-80)
P0116 (86)	○	Engine Coolant Temperature (ECT) Sensor 1 Range/Performance Problem	ON	(see page 11-82)
P0117 (6)	—	Engine Coolant Temperature (ECT) Sensor 1 Circuit Low Voltage	ON	(see page 11-83)
P0118 (6)	—	Engine Coolant Temperature (ECT) Sensor 1 Circuit High Voltage	ON	(see page 11-85)
P0122 (7)	—	Throttle Position (TP) Sensor A Circuit Low Voltage	ON	(see page 11-220)
P0123 (7)	—	Throttle Position (TP) Sensor A Circuit High Voltage	ON	(see page 11-222)
P0125 (86)	○	Engine Coolant Temperature (ECT) Sensor 1 Malfunction/Slow Response	ON	(see page 11-87)
P0128 (87)	○	Cooling System Malfunction	ON	(see page 11-88)
P0133 (61)	○	Air Fuel Ratio (A/F) Sensor (Sensor 1) Malfunction/Slow Response	ON	(see page 11-90)
P0134 (41)	○	Air Fuel Ratio (A/F) Sensor (Sensor 1) Heater System Malfunction	ON	(see page 11-91)
P0135 (41)	○	Air Fuel Ratio (A/F) Sensor (Sensor 1) Heater Circuit Malfunction	ON	(see page 11-92)
P0137 (63)	○	Secondary Heated Oxygen Sensor (Secondary HO2S (Sensor 2)) Circuit Low Voltage	ON	(see page 11-96)
P0138 (63)	○	Secondary Heated Oxygen Sensor (Secondary HO2S (Sensor 2)) Circuit High Voltage	ON	(see page 11-98)
P0139 (63)	○	Secondary Heated Oxygen Sensor (Secondary HO2S (Sensor 2)) Slow Response	ON	(see page 11-101)
P0141 (65)	○	Secondary Heated Oxygen Sensor (Secondary HO2S (Sensor 2)) Heater Circuit Malfunction	ON	(see page 11-102)
P0171 (45)	○	Fuel System Too Lean	ON	(see page 11-105)
P0172 (45)	○	Fuel System Too Rich	ON	(see page 11-105)
P0222 (7)	—	Throttle Position (TP) Sensor B Circuit Low Voltage	ON	(see page 11-224)
P0223 (7)	—	Throttle Position (TP) Sensor B Circuit High Voltage	ON	(see page 11-227)
P0300 (75) any combination of the following P0301 (71) P0302 (72) P0303 (73) P0304 (74)	○	Random Misfire Detected	ON	(see page 11-107)
P0301 (71)	○	No. 1 Cylinder Misfire Detected	ON	(see page 11-110)
P0302 (72)	○	No. 2 Cylinder Misfire Detected	ON	(see page 11-110)
P0303 (73)	○	No. 3 Cylinder Misfire Detected	ON	(see page 11-110)
P0304 (74)	○	No. 4 Cylinder Misfire Detected	ON	(see page 11-110)
P0325 (23)	○	Knock Sensor Circuit Malfunction	ON	(see page 11-116)
P0335 (4)	—	Crankshaft Position (CKP) Sensor No Signal	ON	(see page 11-118)
P0339 (4)	—	Crankshaft Position (CKP) Sensor Circuit Intermittent Interruption	ON	(see page 11-121)
P0340 (57)	○	Camshaft Position (CMP) Sensor A No Signal	ON	(see page 11-265)

NOTE: The above DTCs are indicated when the PGM-FI system is selected with the HDS. Some automatic transmission DTCs cause the MIL to come on. If the MIL is on and no DTCs are indicated in the PGM-FI system, select the A/T system, and check for automatic transmission DTCs.

*: These DTCs are indicated by a blinking MIL when the SCS line is jumped with the HDS. Some DTCs do not cause the MIL to blink when the SCS line is jumped. The last four characters of these DTCs are shown in the gauge display.

(cont'd)

DTC Troubleshooting Index (cont'd)

DTC (MIL indication*)	Two Drive Cycle Detection	Detection Item	MIL	Note
P0341 (57)	○	Camshaft Position (CMP) Sensor A and Crankshaft Position (CKP) Sensor Incorrect Phase Detected	ON	(see page 11-268)
P0344 (57)	○	Camshaft Position (CMP) Sensor A Circuit Intermittent Interruption	ON	(see page 11-269)
P0351 (71)	—	No. 1 Cylinder Ignition Coil Circuit Malfunction	ON	(see page 11-122)
P0352 (72)	—	No. 2 Cylinder Ignition Coil Circuit Malfunction	ON	(see page 11-122)
P0353 (73)	—	No. 3 Cylinder Ignition Coil Circuit Malfunction	ON	(see page 11-122)
P0354 (74)	—	No. 4 Cylinder Ignition Coil Circuit Malfunction	ON	(see page 11-122)
P0365 (8)	—	Camshaft Position (CMP) Sensor B Circuit No Signal	ON	(see page 11-126)
P0369 (8)	—	Camshaft Position (CMP) Sensor B Circuit Intermittent Interruption	ON	(see page 11-128)
P0420 (67)	○	Catalyst System Efficiency Below Threshold	ON	(see page 11-365)
P0443 (92)	○	Evaporative Emission (EVAP) Canister Purge Valve Circuit Malfunction	ON	(see page 11-372)
P0451 (91)	○	Fuel Tank Pressure (FTP) Sensor Circuit Range/Performance Problem	ON	(see page 11-376)
P0452 (91)	○	Fuel Tank Pressure (FTP) Sensor Circuit Low Voltage	ON	(see page 11-377)
P0453 (91)	○	Fuel Tank Pressure (FTP) Sensor Circuit High Voltage	ON	(see page 11-380)
P0455 (90)	○	Evaporative Emission (EVAP) System Large Leak Detected	ON	(see page 11-383)
P0456 (90)	○	Evaporative Emission (EVAP) System Very Small Leak Detected	ON	(see page 11-383)
P0457	—	Evaporative Emission (EVAP) System Leak Detected/Fuel Fill Cap Loose or Missing	OFF	(see page 11-387)
P0461	—	Fuel Level Sensor (Fuel Gauge Sending Unit) Circuit Range/Performance Problem	OFF	(see page 11-320)
P0462	○	Fuel Level Sensor (Fuel Gauge Sending Unit) Circuit Low Voltage	OFF	(see page 11-320)
P0463	○	Fuel Level Sensor (Fuel Gauge Sending Unit) Circuit High Voltage	OFF	(see page 11-322)
P0496 (92)	○	Evaporative Emission (EVAP) System High Purge Flow Detected	ON	(see page 11-388)
P0497 (90)	○	Evaporative Emission (EVAP) System Low Purge Flow Detected	ON	(see page 11-389)
P0498 (117)	○	Evaporative Emission (EVAP) Canister Vent Shut Valve Circuit Low Voltage	ON	(see page 11-393)
P0499 (117)	○	Evaporative Emission (EVAP) Canister Vent Shut Valve Circuit High Voltage	ON	(see page 11-396)
P0506 (14)	○	Idle Control System RPM Lower Than Expected	ON	(see page 11-307)
P0507 (14)	○	Idle Control System RPM Higher Than Expected	ON	(see page 11-309)
P050A (167)	○	Cold Start Idle Air Control System Performance Problem	ON	(see page 11-129)
P050B (167)	○	Cold Start Ignition Timing Control System Performance Problem	ON	(see page 11-131)
P0562	—	Charging System Low Voltage	OFF	(see page 11-134)
P0563	○	Engine Control Module (ECM)/Powertrain Control Module (PCM) Power Source Circuit Unexpected Voltage	OFF	(see page 11-135)
P0602 (196)	—	Engine Control Module (ECM)/Powertrain Control Module (PCM) Programming Error	ON	(see page 11-138)
P0606 (0)	—	Engine Control Module (ECM)/Powertrain Control Module (PCM) Processor Malfunction	ON	(see page 11-138)
P060A (131)*1	—	Powertrain Control Module (PCM) (A/T System) Internal Control Module Malfunction	ON	(see page 11-139)
P062F (131)	—	Engine Control Module (ECM)/Powertrain Control Module (PCM) Internal Control Module Keep Alive Memory (KAM) Error	ON	(see page 11-139)
P0630 (139)	—	VIN Not Programmed or Mismatch	ON	(see page 11-140)
P0685 (135)	○	Engine Control Module (ECM)/Powertrain Control Module (PCM) Power Control Circuit/Internal Circuit Malfunction	ON	(see page 11-141)

NOTE: The above DTCs are indicated when the PGM-FI system is selected with the HDS. Some automatic transmission DTCs cause the MIL to come on. If the MIL is on and no DTCs are indicated in the PGM-FI system, select the A/T system, and check for automatic transmission DTCs.

*: These DTCs are indicated by a blinking MIL when the SCS line is jumped with the HDS. Some DTCs do not cause the MIL to blink when the SCS line is jumped. The last four characters of these DTCs are shown in the gauge display.

*1: A/T

DTC (MIL indication*)	Two Drive Cycle Detection	Detection Item	MIL	Note
P0720 (122)*2	○	Output Shaft (Countershaft) Speed Sensor Circuit Malfunction	ON	(see page 11-142)
P1009 (56)	——	Variable Valve Timing Control (VTC) Advance Malfunction	ON	(see page 11-270)
P1109 (13)	○	Barometric Pressure (BARO) Sensor Circuit Out of Range High	ON	(see page 11-145)
P1116 (86)	○	Engine Coolant Temperature (ECT) Sensor 1 Circuit Range/ Performance Problem	ON	(see page 11-146)
P1128 (5)	○	Manifold Absolute Pressure (MAP) Sensor Signal Lower Than Expected	ON	(see page 11-148)
P1129 (5)	○	Manifold Absolute Pressure (MAP) Sensor Signal Higher Than Expected	ON	(see page 11-149)
P1157 (48)	○	Air Fuel Ratio (A/F) Sensor (Sensor 1) AFS Circuit High Voltage	ON	(see page 11-150)
P1172 (61)	○	Air Fuel Ratio (A/F) Sensor (Sensor 1) Circuit Out of Range High	ON	(see page 11-153)
P1297	○	Electrical Load Detector (ELD) Circuit Low Voltage	OFF	(see page 11-154)
P1298	○	Electrical Load Detector (ELD) Circuit High Voltage	OFF	(see page 11-155)
P1454 (91)	○	Fuel Tank Pressure (FTP) Sensor Circuit Range/Performance Problem	ON	(see page 11-397)
P145C (90)	○	Evaporative Emission (EVAP) System Purge Flow Malfunction	ON	(see page 11-399)
P1549	——	Charging System High Voltage	OFF	(see page 11-157)
P1658 (40)	——	Electronic Throttle Control System (ETCS) Control Relay ON Malfunction	ON	(see page 11-229)
P1659 (40)	——	Electronic Throttle Control System (ETCS) Control Relay OFF Malfunction	ON	(see page 11-231)
P1683 (40)	——	Throttle Valve Default Position Spring Performance Problem	ON	(see page 11-235)
P1684 (40)	——	Throttle Valve Return Spring Performance Problem	ON	(see page 11-236)
P16BB	——	Alternator B Terminal Circuit Low Voltage	OFF	(see page 11-158)
P16BC	——	Alternator FR Terminal Circuit/IGP Circuit Low Voltage	OFF	(see page 11-159)
P2101 (40)	——	Electronic Throttle Control System (ETCS) Malfunction	ON	(see page 11-237)
P2118 (40)	——	Throttle Actuator Current Range/Performance Problem	ON	(see page 11-240)
P2122 (37)	——	Accelerator Pedal Position (APP) Sensor A (Throttle Position (TP) Sensor D) Circuit Low Voltage	ON	(see page 11-243)
P2123 (37)	——	Accelerator Pedal Position (APP) Sensor A (Throttle Position (TP) Sensor D) Circuit High Voltage	ON	(see page 11-246)
P2127 (37)	——	Accelerator Pedal Position (APP) Sensor B (Throttle Position (TP) Sensor E) Circuit Low Voltage	ON	(see page 11-247)
P2128 (37)	——	Accelerator Pedal Position (APP) Sensor B (Throttle Position (TP) Sensor E) Circuit High Voltage	ON	(see page 11-250)
P2135 (7)	——	Throttle Position (TP) Sensor A/B Incorrect Voltage Correlation	ON	(see page 11-252)
P2138 (37)	——	Accelerator Pedal Position (APP) Sensor A/B (Throttle Position (TP) Sensor D/E) Incorrect Voltage Correlation	ON	(see page 11-254)
P2176 (40)	——	Throttle Actuator Control System Idle Position Not Learned	ON	(see page 11-256)
P2183 (192)	○	Engine Coolant Temperature (ECT) Sensor 2 Circuit Range/ Performance Problem	ON	(see page 11-162)
P2184 (192)	○	Engine Coolant Temperature (ECT) Sensor 2 Circuit Low Voltage	ON	(see page 11-164)
P2185 (192)	○	Engine Coolant Temperature (ECT) Sensor 2 Circuit High Voltage	ON	(see page 11-165)
P2195 (48)	○	Air Fuel Ratio (A/F) Sensor (Sensor 1) Signal Stuck Lean	ON	(see page 11-168)
P2227 (13)	○	Barometric Pressure (BARO) Sensor Circuit Range/Performance Problem	ON	(see page 11-169)
P2228 (13)	○	Barometric Pressure (BARO) Sensor Circuit Low Voltage	ON	(see page 11-171)
P2229 (13)	○	Barometric Pressure (BARO) Sensor Circuit High Voltage	ON	(see page 11-171)
P2238 (48)	○	Air Fuel Ratio (A/F) Sensor (Sensor 1) AFS+ Circuit Low Voltage	ON	(see page 11-172)
P2252 (48)	○	Air Fuel Ratio (A/F) Sensor (Sensor 1) AFS− Circuit Low Voltage	ON	(see page 11-173)

NOTE: The above DTCs are indicated when the PGM-FI system is selected with the HDS. Some automatic transmission DTCs cause the MIL to come on. If the MIL is on and no DTCs are indicated in the PGM-FI system, select the A/T system, and check for automatic transmission DTCs.

*: These DTCs are indicated by a blinking MIL when the SCS line is jumped with the HDS. Some DTCs do not cause the MIL to blink when the SCS line is jumped. The last four characters of these DTCs are shown in the gauge display.

*2: M/T

(cont'd)

DTC Troubleshooting Index (cont'd)

DTC (MIL indication*)	Two Drive Cycle Detection	Detection Item	MIL	Note
P2422 (117)	○	Evaporative Emission (EVAP) Canister Vent Shut Valve Stuck Closed Malfunction	ON	(see page 11-397)
P2610 (132)	——	Engine Control Module (ECM)/Powertrain Control Module (PCM) Ignition Off Internal Timer Malfunction	ON	(see page 11-175)
P2646 (22)*3	——	Rocker Arm Oil Pressure Switch Circuit Low Voltage	ON	(see page 11-271)
P2646 (22)*4	——	Rocker Arm Oil Pressure Switch A Circuit Low Voltage	ON	(see page 11-273)
P2647 (22)*3	——	Rocker Arm Oil Pressure Switch Circuit High Voltage	ON	(see page 11-278)
P2647 (22)*4	——	Rocker Arm Oil Pressure Switch A Circuit High Voltage	ON	(see page 11-273)
P2648 (21)*3	——	Rocker Arm Oil Control Solenoid Circuit Low Voltage	ON	(see page 11-281)
P2648 (21)*4	——	Rocker Arm Oil Control Solenoid A (Intake Valve Side) Circuit Low Voltage	ON	(see page 11-283)
P2649 (21)*3	——	Rocker Arm Oil Control Solenoid Circuit High Voltage	ON	(see page 11-285)
P2649 (21)*4	——	Rocker Arm Oil Control Solenoid A (Intake Valve Side) Circuit High Voltage	ON	(see page 11-287)
P2651 (52)*4	○	Rocker Arm Oil Pressure Switch B Circuit Low Voltage	ON	(see page 11-290)
P2652 (52)*4	○	Rocker Arm Oil Pressure Switch B Circuit High Voltage	ON	(see page 11-290)
P2653 (51)*4	○	Rocker Arm Oil Control Solenoid B (Exhaust Valve Side) Circuit Low Voltage	ON	(see page 11-295)
P2654 (51)*4	○	Rocker Arm Oil Control Solenoid B (Exhaust Valve Side) Circuit High Voltage	ON	(see page 11-297)
P2A00 (61)	○	Air Fuel Ratio (A/F) Sensor (Sensor 1) Circuit Range/Performance Problem	ON	(see page 11-176)
U0029 (126)	——	F-CAN Malfunction (BUS-OFF (Engine Control Module (ECM)/ Powertrain Control Module (PCM)))	ON	(see page 11-177)
U0122	——	F-CAN Malfunction (Engine Control Module (ECM)/Powertrain Control Module (PCM)-VSA Modulator-Control Unit)	OFF	(see page 11-177)
U0155 (126)	——	F-CAN Malfunction (Engine Control Module (ECM)/Powertrain Control Module (PCM)-Gauge Control Module)	ON	(see page 11-179)
U0300 (131)*1	——	PGM-FI System and A/T System Program Version Mismatch	ON	(see page 11-181)

NOTE: The above DTCs are indicated when the PGM-FI system is selected with the HDS. Some automatic transmission DTCs cause the MIL to come on. If the MIL is on and no DTCs are indicated in the PGM-FI system, select the A/T system, and check for automatic transmission DTCs.

* : These DTCs are indicated by a blinking MIL when the SCS line is jumped with the HDS. Some DTCs do not cause the MIL to blink when the SCS line is jumped. The last four characters of these DTCs are shown in the gauge display.
* 1: A/T
* 3: All models except PZEV
* 4: PZEV model

Symptom Troubleshooting Index

When the vehicle has one of these symptoms, check for a diagnostic trouble code (DTC) with the HDS. If there is no DTC, do the diagnostic procedure for the symptom, in the sequence listed, until you find the cause.

Symptom	Diagnostic procedure	Also check for
Engine will not start (MIL works OK, no DTCs set)	1. Test the battery (see page 22-88). 2. Test the starter (see page 4-10). 3. Check the fuel pressure (see page 11-335). 4. Troubleshoot the fuel pump circuit (see page 11-326).	• Low compression • No ignition spark • Intake air leaks • Locked up engine • Broken cam chain • Fuel contamination
Engine will not start (MIL comes on and stays on, no DTCs set)	Troubleshoot the DLC circuit (see page 11-192).	• No power to ECM/PCM • No ground to ECM/PCM • Shorted reference voltage
MIL comes on and stays on, or never comes on at all, no DTCs set	Troubleshoot the MIL circuit (see page 11-191).	
Engine will not start (MIL works OK, no DTCs set, immobilizer indicator stays on or flashes)	Check the immobilizer system (see page 22-392).	
Engine starts but stalls immediately (MIL works OK, no DTCs set, immobilizer indicator stays on or flashes)	Check the immobilizer system (see page 22-392).	
Engine is hard to start (MIL works OK, no DTCs set)	1. Test the battery (see page 22-88). 2. Check the fuel pressure (see page 11-335). 3. Clean the throttle body (see page 11-359).	• Low compression • Intake air leaks • Fuel contamination • Weak spark
Cold fast idle too low (MIL works OK, no DTCs set)	1. Do the ECM/PCM idle learn procedure (see page 11-317). 2. Check the idle speed (see page 11-316). 3. Clean the throttle body (see page 11-359).	
Cold fast idle too high (MIL works OK, no DTCs set)	1. Do the ECM/PCM idle learn procedure (see page 11-317). 2. Check the idle speed (see page 11-316). 3. Do the throttle position learning check (see page 11-358).	Intake air leaks
Idle speed fluctuates (MIL works OK, no DTCs set)	1. Do the ECM/PCM idle learn procedure (see page 11-317). 2. Check the idle speed (see page 11-316). 3. Do the carbon accumulation check (see page 11-358). 4. Troubleshoot the A/C signal circuit (see page 11-310).	Incorrect valve timing or clearance adjustment

(cont'd)

Symptom Troubleshooting Index (cont'd)

Symptom	Diagnostic procedure	Also check for
After warming up, idle speed is below specification without load (MIL works OK, no DTCs set)	1. Troubleshoot the alternator FR signal circuit (see page 11-311). 2. Do the carbon accumulation check (see page 11-358).	Incorrect valve adjustment
After warming up, idle speed is above specification without load (MIL works OK, no DTCs set)	1. Troubleshoot the alternator FR signal circuit (see page 11-311). 2. Inspect the APP sensor (see page 11-258).	Intake air leaks
After warming up, idle speed drops when steering wheel is turned (MIL works OK, no DTCs set)	1. Do the ECM/PCM idle learn procedure (see page 11-317). 2. Troubleshoot the PSP switch signal circuit (see page 11-312). 3. Do the carbon accumulation check (see page 11-358).	Power steering system problems
Low power (MIL works OK, no DTCs set)	Check the fuel pressure (see page 11-335).	• Low compression • Incorrect camshaft timing • Incorrect engine oil level • Exhaust restriction
Engine stalls (MIL works OK, no DTCs set)	1. Do the ECM/PCM idle learn procedure (see page 11-317). 2. Check the fuel pressure (see page 11-335). 3. Check the idle speed (see page 11-316). 4. Troubleshoot the brake pedal position switch signal circuit (see page 11-314).	• Intake air leaks • Faulty harness and sensor connections • Fuel contamination
Difficult to refuel (MIL works OK, no DTCs set)	1. Check the fuel vent tube between the EVAP canister and the fuel tank. 2. Check the fuel tank vapor recirculation tube between the fuel pipe and the fuel tank. 3. Replace the fuel tank (see page 11-352).	Malfunctioning gas station filling nozzle.
Fuel overflows during refueling (No DTCs set)	Replace the fuel tank (see page 11-352).	Malfunctioning gas station filling nozzle.
Fuel cap warning message stays on (MIL works OK, no DTCs set)	Troubleshoot the fuel cap warning message system (see page 11-400).	
HDS does not communicate with the ECM/PCM or the vehicle	Troubleshoot the DLC circuit (see page 11-192).	Correct HDS software

System Description

Electronic Control System

The functions of the fuel and emission control systems are managed by the engine control module (ECM) on vehicles with manual transmissions or the powertrain control module (PCM) on vehicles with automatic transmissions.

Self-diagnosis
The ECM/PCM detects the failure of a signal from a sensor or from another control unit and stores a Temporary DTC or a DTC. Depending on the failure, a DTC is stored in either the first or the second drive cycle. When a DTC is stored, the ECM/PCM turns on the malfunction indicator lamp (MIL) by a signal sent to the gauge via F-CAN.

- **One Drive Cycle Detection Method**
  When an abnormality occurs in the signal from a sensor or from another control unit, the ECM/PCM stores a DTC and turns on the MIL immediately.

- **Two Drive Cycle Detection Method**
  When an abnormality occurs in the signal from a sensor or from another control unit in the first drive cycle, the ECM/PCM stores a Temporary DTC. The MIL does not come on at this time. If the failure continues in the second drive cycle, the ECM/PCM stores a DTC and turns on the MIL.

Fail-safe Function
When an abnormality occurs in the signal from a sensor or from another control unit, the ECM/PCM ignores that signal and substitutes a pre-programmed value for them that allows the engine to continue running. This causes a DTC to be stored and the MIL to come on.

MIL Bulb Check and Readiness Code Condition
When the ignition switch is turned to ON (II), the ECM/PCM turns on the MIL via the F-CAN circuit for about 15 to 20 seconds to check the bulb condition. If any readiness codes are not set to complete, the MIL flashes five times. If all readiness codes are set to complete, the MIL goes off.

Self Shut Down (SSD) Mode
After the ignition switch is turned to LOCK (0), the ECM/PCM stays on (about 40 minutes). If the ECM/PCM connector is disconnected during this time, the ECM/PCM may be damaged. To cancel this mode, disconnect the negative cable from the battery or jump the SCS line with the HDS after the ignition switch is turned to LOCK (0).

(cont'd)

System Description (cont'd)

ECM/PCM Electrical Connections

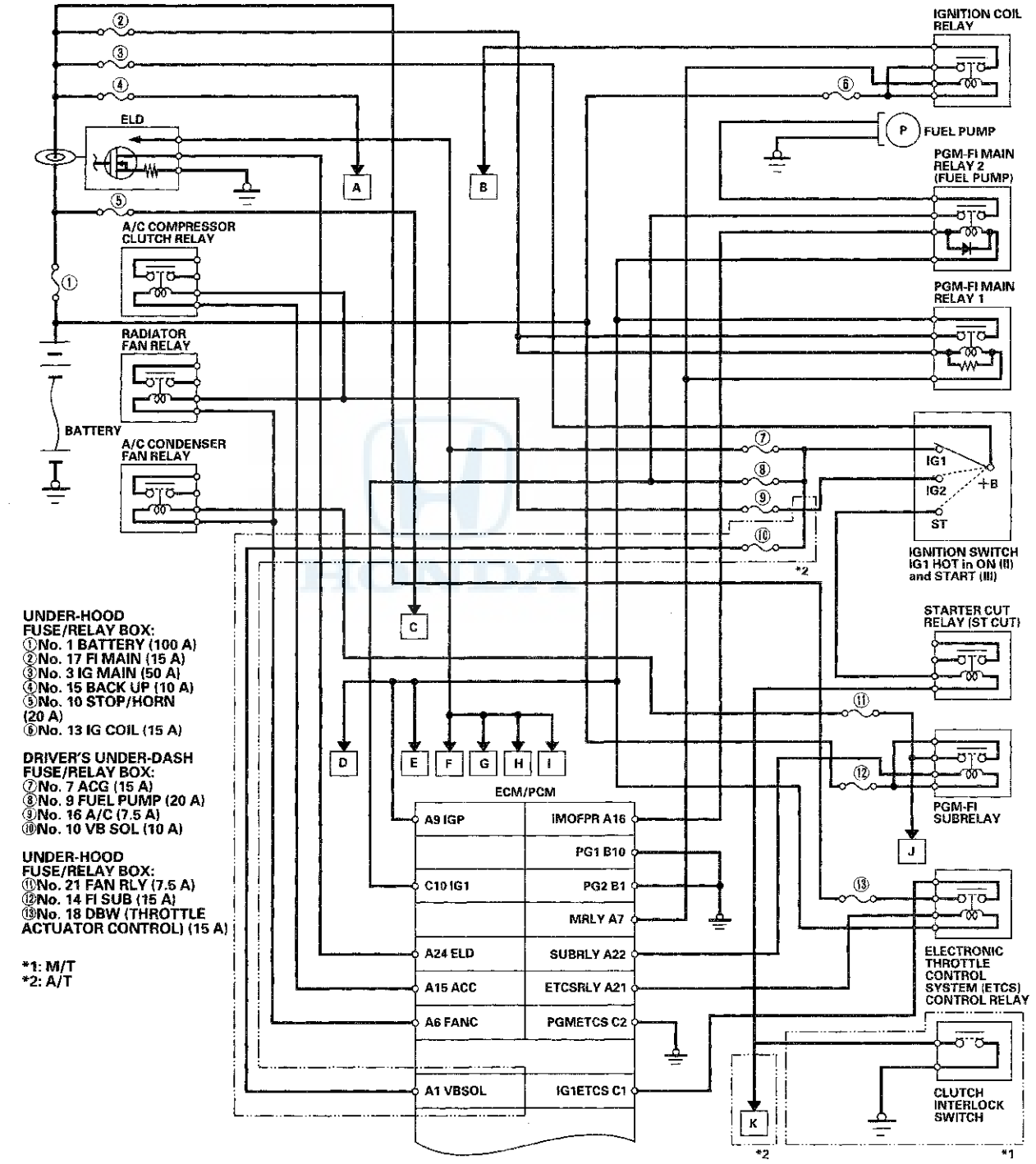

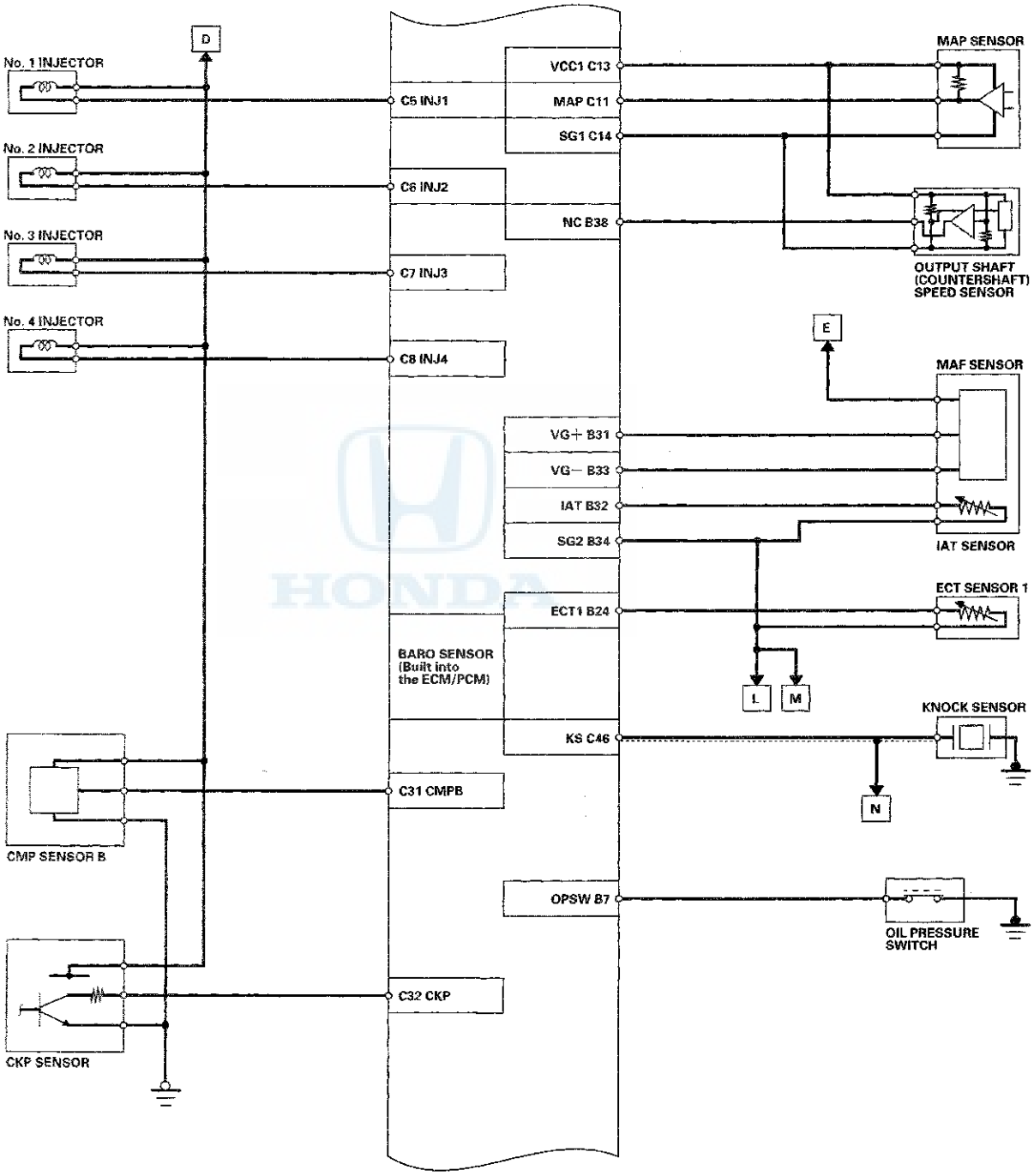
D
No. 1 INJECTOR
No. 2 INJECTOR
No. 3 INJECTOR
No. 4 INJECTOR
C5 INJ1
C6 INJ2
C7 INJ3
C8 INJ4
VCC1 C13
MAP C11
SG1 C14
NC B38
MAP SENSOR
OUTPUT SHAFT (COUNTERSHAFT) SPEED SENSOR
E
MAF SENSOR
VG+ B31
VG− B33
IAT B32
SG2 B34
IAT SENSOR
ECT SENSOR 1
ECT1 B24
BARO SENSOR (Built into the ECM/PCM)
L
M
KNOCK SENSOR
KS C46
N
C31 CMPB
CMP SENSOR B
OPSW B7
OIL PRESSURE SWITCH
C32 CKP
CKP SENSOR

(cont'd)

System Description (cont'd)

ECM/PCM Electrical Connections (cont'd)

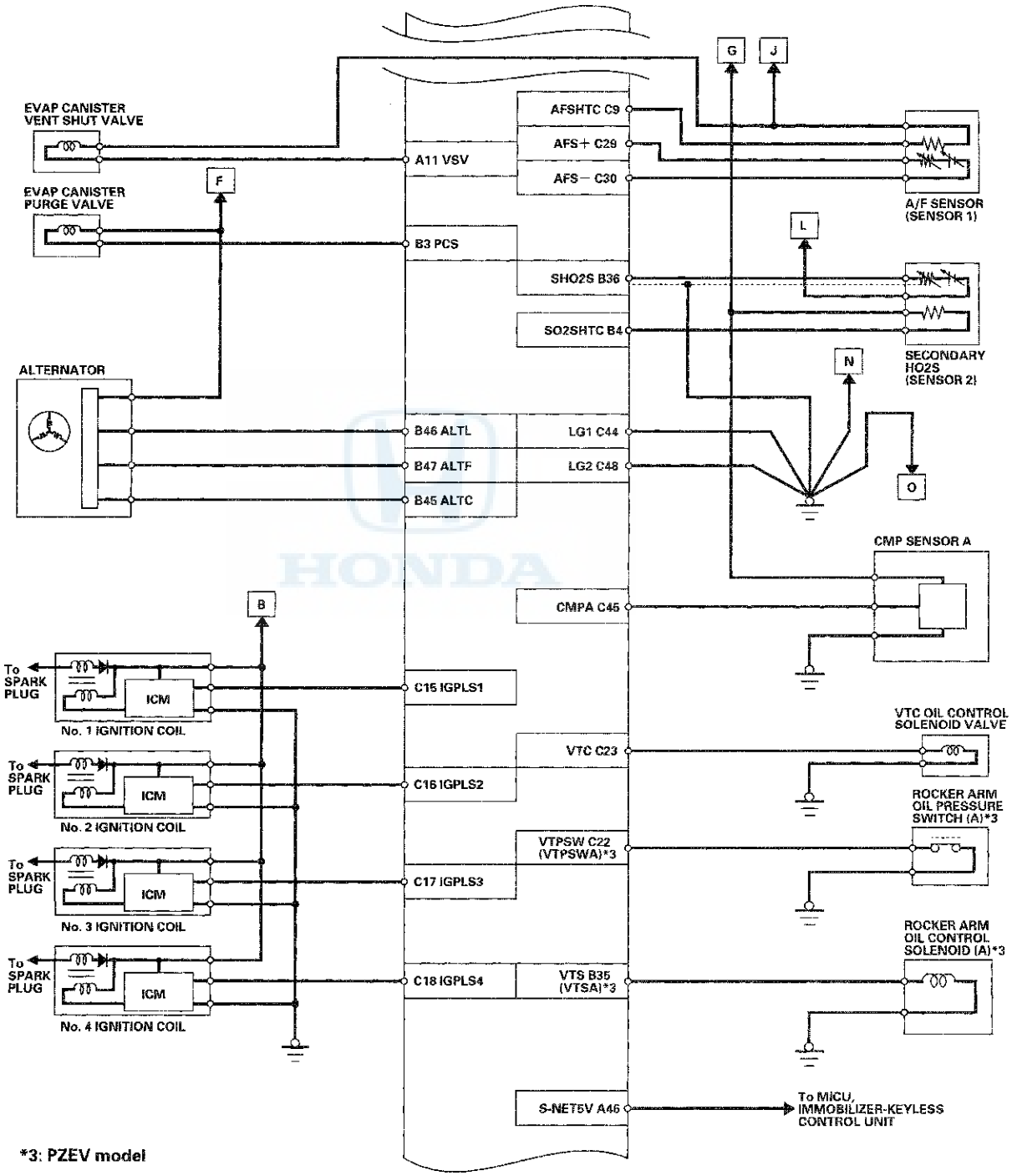

*3: PZEV model

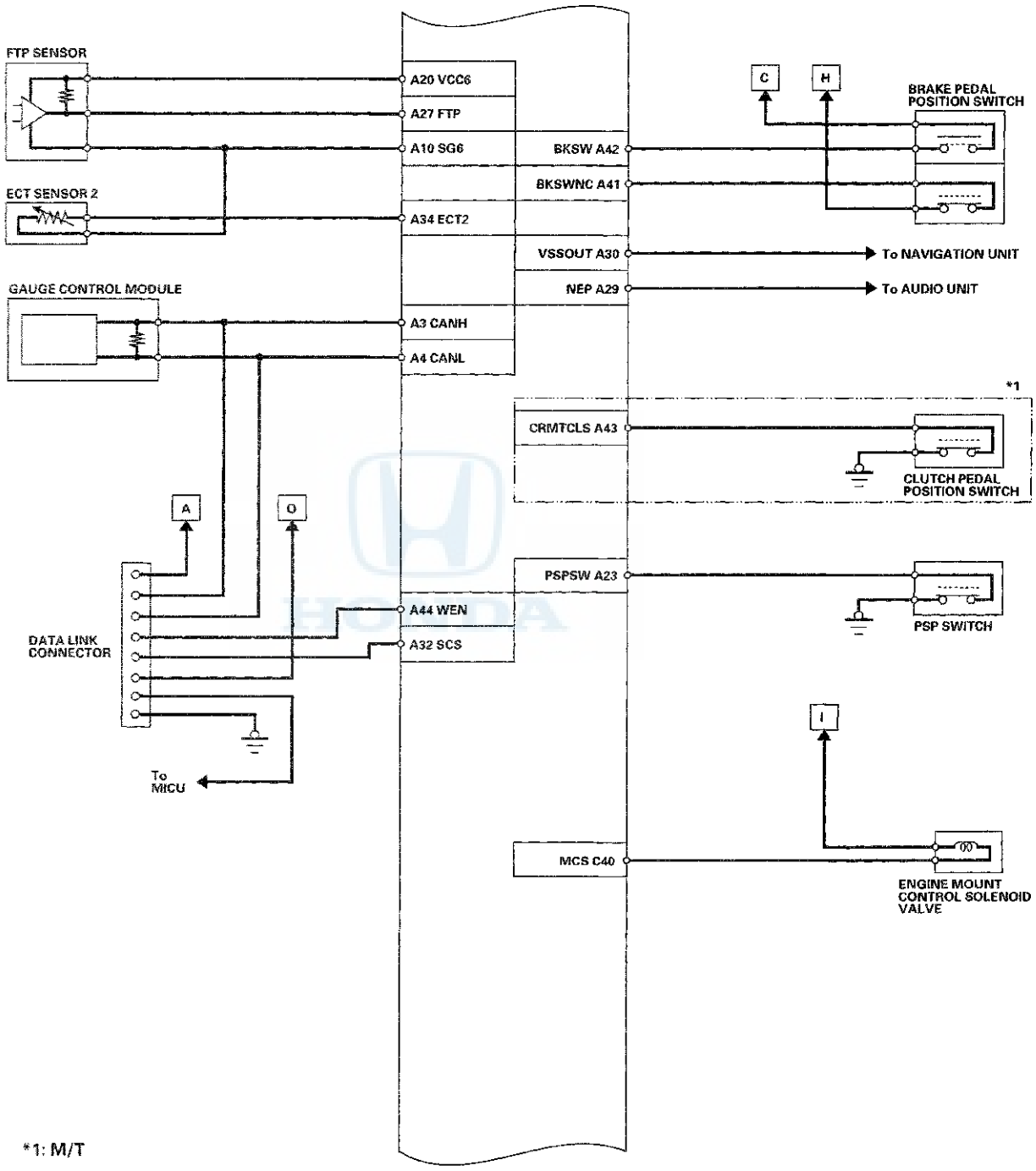
FTP SENSOR
A20 VCC6
A27 FTP
A10 SG6
ECT SENSOR 2
A34 ECT2
GAUGE CONTROL MODULE
A3 CANH
A4 CANL
C
H
BRAKE PEDAL POSITION SWITCH
BKSW A42
BKSWNC A41
VSSOUT A30
To NAVIGATION UNIT
NEP A29
To AUDIO UNIT
*1
CRMTCLS A43
CLUTCH PEDAL POSITION SWITCH
A
O
PSPSW A23
PSP SWITCH
A44 WEN
A32 SCS
DATA LINK CONNECTOR
To MICU
I
MCS C40
ENGINE MOUNT CONTROL SOLENOID VALVE

*1: M/T

(cont'd)

System Description (cont'd)

ECM/PCM Electrical Connections (cont'd)

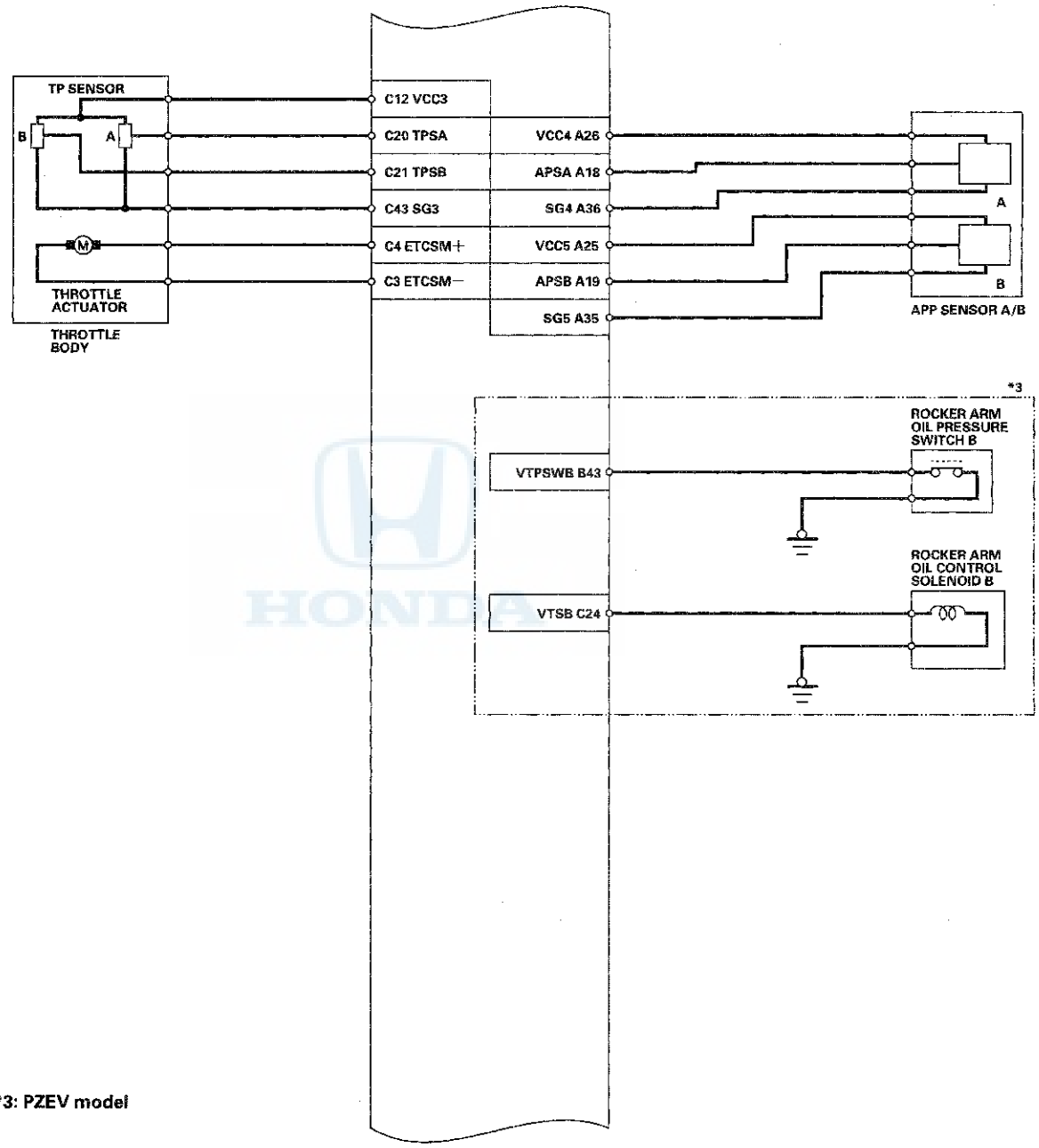

*3: PZEV model

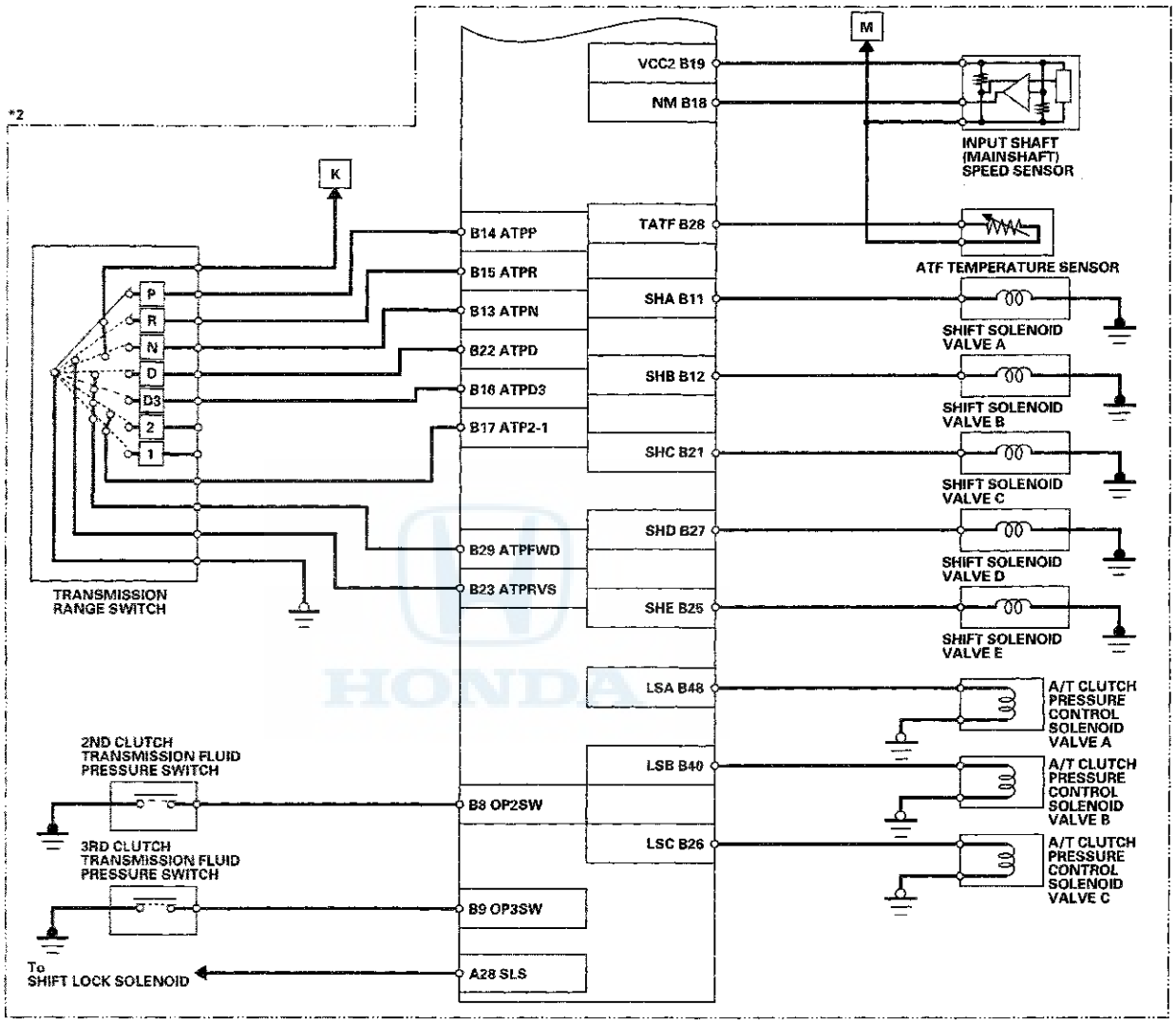

*2: A/T

ECM/PCM A (□) (49P)

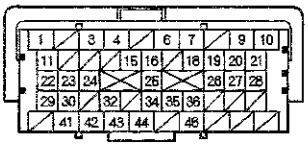

ECM/PCM B (△) (49P)

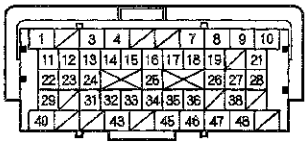

ECM/PCM C (○) (49P)

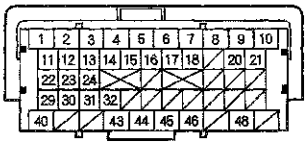

TERMINAL LOCATIONS

(cont'd)

System Description (cont'd)

Vacuum Hose Routing

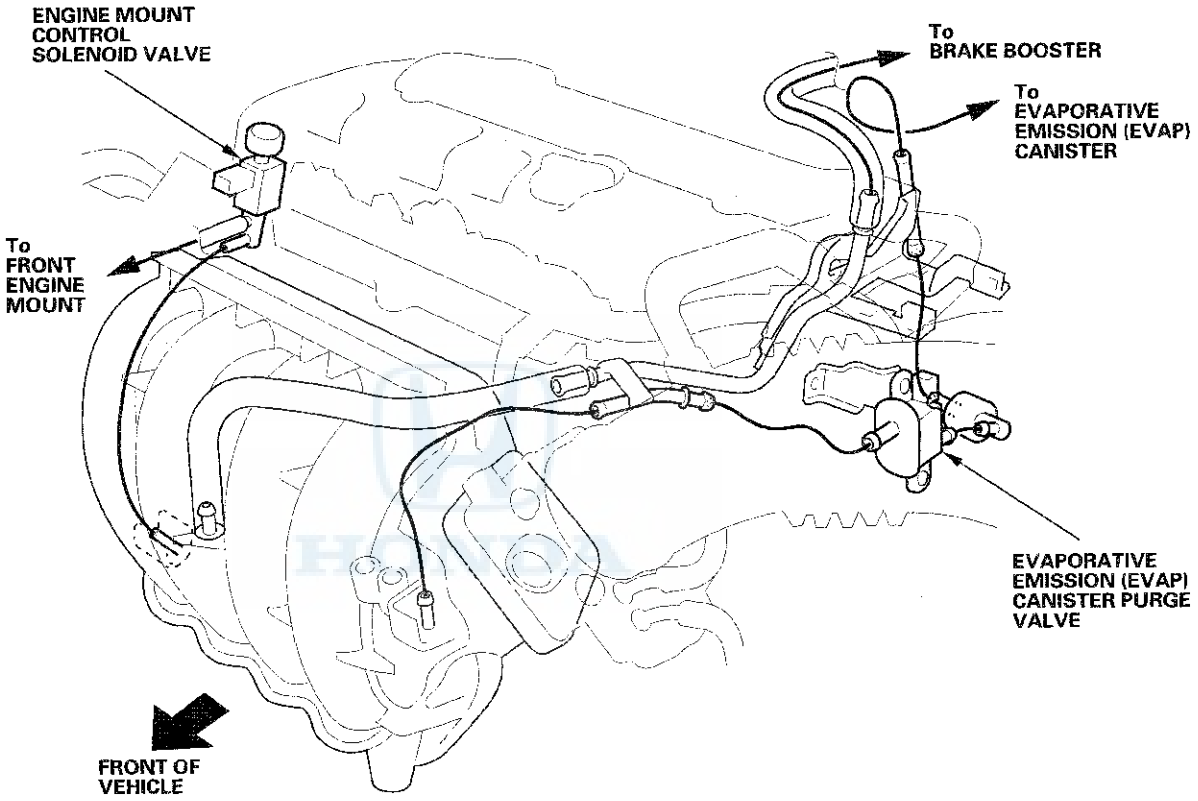

Vacuum Distribution

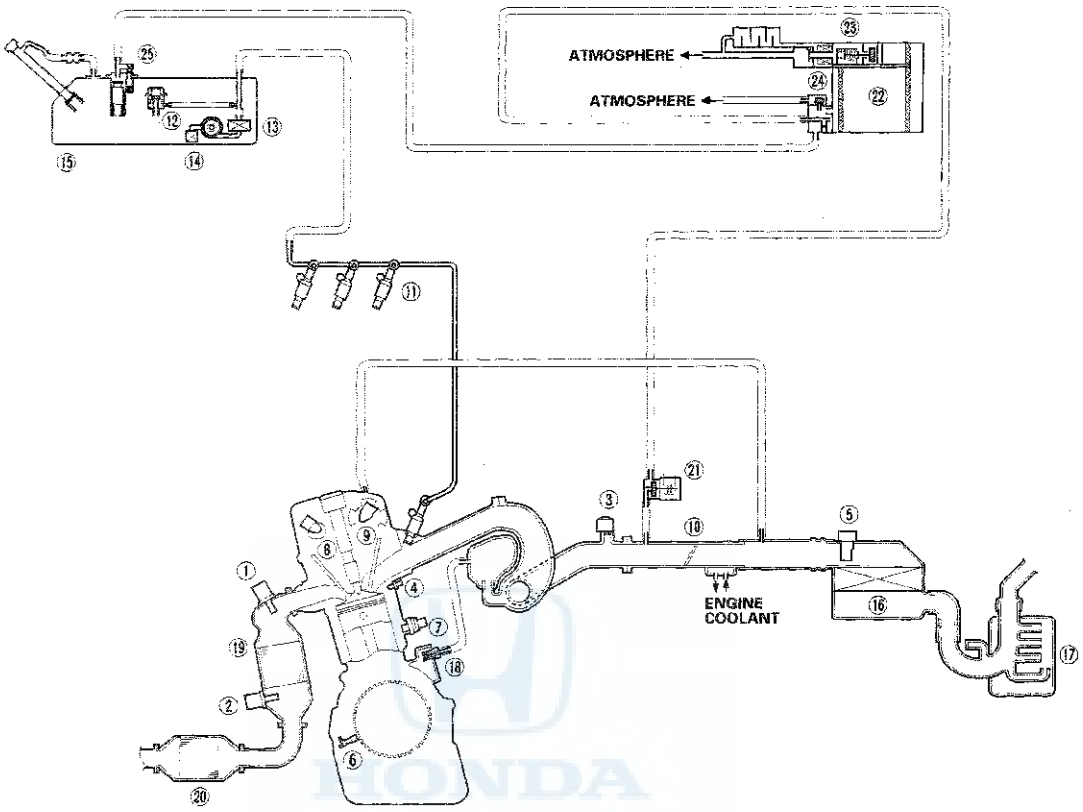

① AIR FUEL RATIO (A/F) SENSOR (SENSOR 1)
② SECONDARY HEATED OXYGEN SENSOR (SECONDARY HO2S) (SENSOR 2)
③ MANIFOLD ABSOLUTE PRESSURE (MAP) SENSOR
④ ENGINE COOLANT TEMPERATURE (ECT) SENSOR 1
⑤ MASS AIR FLOW (MAF) SENSOR and INTAKE AIR TEMPERATURE (IAT) SENSOR
⑥ CRANKSHAFT POSITION (CKP) SENSOR
⑦ KNOCK SENSOR
⑧ CAMSHAFT POSITION (CMP) SENSOR B
⑨ CAMSHAFT POSITION (CMP) SENSOR A
⑩ THROTTLE BODY
⑪ INJECTOR
⑫ FUEL PRESSURE REGULATOR
⑬ FUEL FILTER
⑭ FUEL PUMP
⑮ FUEL TANK
⑯ AIR CLEANER
⑰ INTAKE AIR RESONATOR
⑱ POSITIVE CRANKCASE VENTILATION (PCV) VALVE
⑲ WARM UP THREE WAY CATALYTIC CONVERTER (WU-TWC)
⑳ UNDER-FLOOR THREE WAY CATALYTIC CONVERTER (TWC)
㉑ EVAPORATIVE EMISSION (EVAP) CANISTER PURGE VALVE
㉒ EVAPORATIVE EMISSION (EVAP) CANISTER
㉓ EVAPORATIVE EMISSION (EVAP) CANISTER VENT SHUT VALVE
㉔ FUEL TANK PRESSURE (FTP) SENSOR
㉕ FUEL TANK VAPOR CONTROL VALVE

(cont'd)

System Description (cont'd)

ECM/PCM Inputs and Outputs at Connector A (□) (49P)

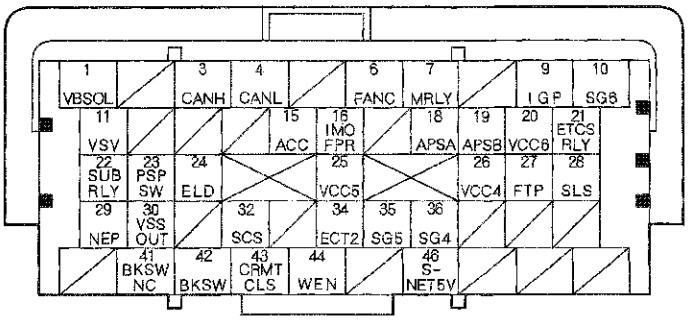

Terminal side of female terminals

NOTE: Standard battery voltage is about 12 V.

Terminal number	Wire color	Terminal name	Description	Signal
1*1	RED	VBSOL (POWER SOURCE FOR SOLENOID VALVES)	Power source for solenoid valves	With ignition switch ON (II): battery voltage
3	WHT	CANH (CAN COMMUNICATION SIGNAL HIGH)	Sends communication signal	With ignition switch ON (II): pulses (about 2.5 V)
4	RED	CANL (CAN COMMUNICATION SIGNAL LOW)	Sends communication signal	With ignition switch ON (II): pulses (about 2.5 V)
6	YEL	FANC (RADIATOR FAN CONTROL)	Drives radiator fan relay	With radiator fan running: about 0 V With radiator fan stopped: battery voltage
7	RED/BLK	MRLY (PGM-FI MAIN RELAY 1)	Drives PGM-FI main relay 1 Power source for DTC memory	With ignition switch ON (II): about 0 V With ignition switch OFF: battery voltage
9	YEL/BLK	IGP (POWER SOURCE)	Power source for ECM/PCM circuit	With ignition switch ON (II): battery voltage
10	BLK	SG6 (SENSOR GROUND)	Sensor ground	Less than 0.5 V at all times
11	RED	VSV (EVAPORATIVE EMISSION (EVAP) CANISTER VENT SHUT VALVE)	Drives EVAP canister vent shut valve	With ignition switch ON (II): battery voltage
15	PUR	ACC (A/C COMPRESSOR CLUTCH RELAY)	Drives A/C compressor clutch relay	With compressor ON: about 0 V With compressor OFF: battery voltage
16	GRY	IMOFPR (IMMOBILIZER FUEL PUMP RELAY)	Drives PGM-FI main relay 2 (FUEL PUMP)	About 0 V for 2 seconds after turning ignition switch ON (II), then battery voltage With engine running: about 0 V

* 1: A/T

ECM/PCM Inputs and Outputs at Connector A (□) (49P)

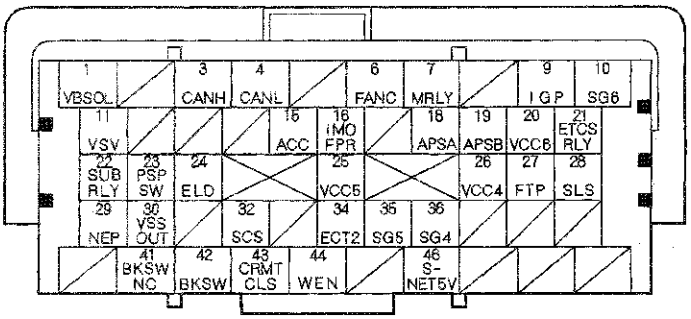

Terminal side of female terminals

NOTE: Standard battery voltage is about 12 V.

Terminal number	Wire color	Terminal name	Description	Signal
18	YEL	APSA (ACCELERATOR PEDAL POSITION (APP) SENSOR A)	Detects APP sensor A signal	With ignition switch ON (II) and accelerator pedal pressed: about 4.8 V With ignition switch ON (II) and accelerator pedal released: about 1.0 V
19	ORN	APSB (ACCELERATOR PEDAL POSITION (APP) SENSOR B)	Detects APP sensor B signal	With ignition switch ON (II) and accelerator pedal pressed: about 2.4 V With ignition switch ON (II) and accelerator pedal released: about 0.5 V
20	YEL	VCC6 (SENSOR VOLTAGE)	Provides sensor reference voltage	With ignition switch ON (II): about 5.0 V
21	WHT	ETCSRLY (ELECTRONIC THROTTLE CONTROL SYSTEM (ETCS) CONTROL RELAY)	Drives electronic throttle control system (ETCS) control relay	With ignition switch ON (II): about 0 V
22	RED/YEL	SUBRLY (AIR FUEL RATIO (A/F) SENSOR RELAY)	Drives A/F sensor relay	With ignition switch ON (II): about 0 V
23	PNK	PSPSW (POWER STEERING PRESSURE SWITCH SIGNAL)	Detects PSP switch signal	At idle with steering wheel in straight ahead position: about 0 V At idle with steering wheel at full lock: battery voltage
24	BLU/BLK	ELD (ELECTRICAL LOAD DETECTOR (ELD))	Detects ELD signal	With ignition switch ON (II): about 0.1—4.8 V (depending on electrical load)

(cont'd)

System Description (cont'd)

ECM/PCM Inputs and Outputs at Connector A (□) (49P)

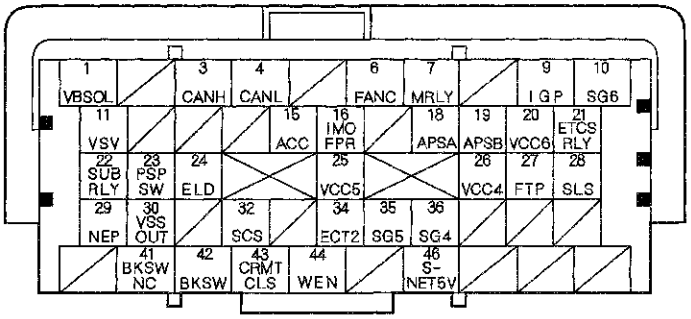

Terminal side of female terminals

NOTE: Standard battery voltage is about 12 V.

Terminal number	Wire color	Terminal name	Description	Signal
25	BRN	VCC5 (SENSOR VOLTAGE)	Provides sensor reference voltage	With ignition switch ON (II): about 5.0 V
26	RED	VCC4 (SENSOR VOLTAGE)	Provides sensor reference voltage	With ignition switch ON (II): about 5.0 V
27	LT GRN	FTP (FUEL TANK PRESSURE (FTP) SENSOR)	Detects FTP sensor signal	With ignition switch ON (II) and fuel fill cap removed: about 2.5 V
28*1	PNK	SLS (SHIFT LOCK SOLENOID)	Drives shift lock solenoid	With ignition switch ON (II), in P, brake pedal pressed, and accelerator released: about 0 V
29	BLU	NEP (ENGINE SPEED SIGNAL)	Outputs engine speed signal	With engine running: pulses
30	BLU	VSSOUT (VEHICLE SPEED SIGNAL OUTPUT)	Sends vehicle speed signal	Depending on vehicle speed: pulses
32	ORN	SCS (SERVICE CHECK SIGNAL)	Detects service check signal	With service check signal shorted using the HDS: about 0 V With service check signal opened: about 5.0 V
34	YEL/RED	ECT2 (ENGINE COOLANT TEMPERATURE (ECT) SENSOR 2)	Detects ECT sensor 2 signal	With ignition switch ON (II): about 0.1—4.8 V (depending on engine coolant temperature)
35	GRN	SG5 (SENSOR GROUND)	Sensor ground	Less than 0.5 V at all times
36	BLU	SG4 (SENSOR GROUND)	Sensor ground	Less than 0.5 V at all times

* 1: A/T

ECM/PCM Inputs and Outputs at Connector A (□) (49P)

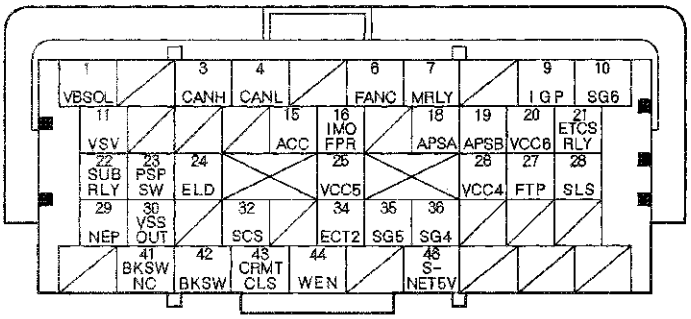

Terminal side of female terminals

NOTE: Standard battery voltage is about 12 V.

Terminal number	Wire color	Terminal name	Description	Signal
41	ORN	BKSWNC (BRAKE PEDAL POSITION SWITCH)	Detects brake pedal position switch signal	With ignition switch ON (II) and brake pedal released: battery voltage With ignition switch ON (II) and brake pedal pressed: about 0 V
42	LT GRN	BKSW (BRAKE PEDAL POSITION SWITCH)	Detects brake pedal position switch signal	With brake pedal released: about 0 V With brake pedal pressed: battery voltage
43	BRN	CRMTCLS (CRUISE CLUTCH PEDAL POSITION SWITCH SIGNAL)	Detects clutch pedal position switch signal	With ignition switch ON (II) and clutch pedal released: about 0 V With ignition switch ON (II) and clutch pedal pressed: battery voltage
44	RED	WEN (WRITE ENABLE SIGNAL)	Detects write enable signal	With ignition switch ON (II): about 0 V
46	LT GRN	S-NET5V (SERIAL COMMUNICATION FOR IMMOBILIZER)	Sends serial communication signal	With ignition switch ON (II): pulses With ignition switch OFF: about 5.0 V

(cont'd)

System Description (cont'd)

ECM/PCM Inputs and Outputs at Connector B (△) (49P)

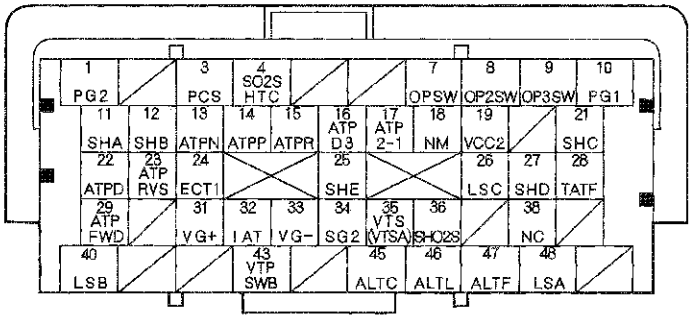

Terminal side of female terminals

NOTE: Standard battery voltage is about 12 V.

Terminal number	Wire color	Terminal name	Description	Signal
1	BLK	PG2 (POWER GROUND)	Ground circuit for ECM/PCM	Less than 0.5 V at all times
3	YEL/BLU	PCS (EVAPORATIVE EMISSION (EVAP) CANISTER PURGE VALVE)	Drives EVAP canister purge valve	With engine running, engine coolant below 131 °F (55 °C): battery voltage With engine running, engine coolant above 131 °F (55 °C): duty controlled
4	BLK/WHT	SO2SHTC (SECONDARY HEATED OXYGEN SENSOR (SECONDARY HO2S) HEATER (SENSOR 2))	Drives secondary HO2S heater (sensor 2)	With ignition switch ON (II): battery voltage With fully warmed up engine running: duty controlled
7	YEL/RED	OPSW (OIL PRESSURE SWITCH)	Detects engine oil pressure signal	With ignition switch ON: about 0 V With engine running: battery voltage
8*1	BLU/RED	OP2SW (2ND CLUTCH TRANSMISSION FLUID PRESSURE SWITCH)	Detects 2nd clutch transmission fluid pressure switch input	With ignition switch ON (II): Without 2nd clutch pressure: about 5.0 V With 2nd clutch pressure: about 0 V
9*1	BLU/WHT	OP3SW (3RD CLUTCH TRANSMISSION FLUID PRESSURE SWITCH)	Detects 3rd clutch transmission fluid pressure switch input	With ignition switch ON (II): Without 3rd clutch pressure: about 5.0 V With 3rd clutch pressure: about 0 V
10	BLK	PG1 (POWER GROUND)	Ground circuit for ECM/PCM	Less than 0.5 V at all times
11*1	BLU/BLK	SHA (SHIFT SOLENOID VALVE A)	Drives shift solenoid valve A	With engine running in R, D (in 1st, 4th, and 5th gears) D3 (in 1st), and 1: battery voltage With engine running in P, N, D, and D3 (in 2nd and 3rd gears) and 2: about 0 V
12*1	GRN/WHT	SHB (SHIFT SOLENOID VALVE B)	Drives shift solenoid valve B	With engine running in P, R, N, D, and D3 (in 1st and 2nd gears), 2, and 1: battery voltage With engine running in D (in 3rd, 4th, 5th gears), D3 (in 3rd gear), 2 and 1: about 0 V
13*1	RED/BLK	ATPN (TRANSMISSION RANGE SWITCH N)	Detects transmission range switch N position signal input	In N: about 0 V In any position other than N: about 5.0 V
14*1	BLU/BLK	ATPP (TRANSMISSION RANGE SWITCH P)	Detects transmission range P position signal input	In P: about 0 V In any position other than P: about 5.0 V
15*1	WHT	ATPR (TRANSMISSION RANGE SWITCH R)	Detects transmission range switch R position signal input	In R: about 0 V In any position other than R: about 5.0 V
16*1	RED	ATPD3 (TRANSMISSION RANGE SWITCH D3)	Detects transmission range switch D3 position signal input	In D3: about 0 V In any position other than D3: battery voltage

* 1: A/T

ECM/PCM Inputs and Outputs at Connector B (△) (49P)

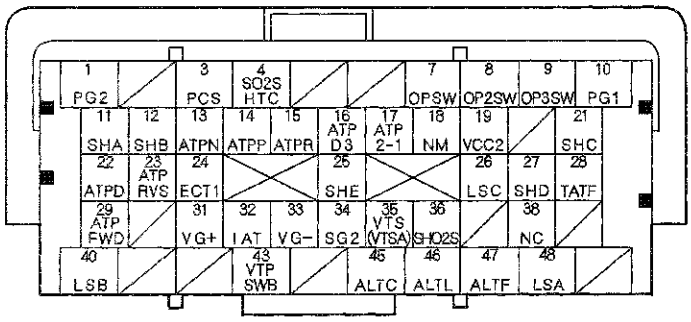

Terminal side of female terminals

NOTE: Standard battery voltage is about 12 V.

Terminal number	Wire color	Terminal name	Description	Signal
17*1	GRN/RED	ATP2-1 (TRANSMISSION RANGE SWITCH 2-1)	Detects transmission range switch 2-1 position signal input	In 2 and 1: about 0 V In any position other than 2 and 1: battery voltage
18*1	WHT/RED	NM (INPUT SHAFT (MAINSHAFT) SPEED SENSOR)	Detects input shaft (mainshaft) speed sensor signal	With ignition switch ON (II): about 0 V With engine idling in N position: about 2.5 V
19*1	YEL/BLU	VCC2 (SENSOR VOLTAGE)	Provides sensor voltage	With ignition switch ON (II): about 5.0 V
21*1	GRN	SHC (SHIFT SOLENOID VALVE C)	Drives shift solenoid valve C	With engine running in N, D (in 1st, 3rd, and 5th gears), D3 (in 1st and 3rd gears), and 1: battery voltage With engine running in P, R, D (in 2nd and 4th gears), D3 (in 2nd gear), and 2: about 0 V
22*1	YEL/GRN	ATPD (TRANSMISSION RANGE SWITCH D)	Detects transmission range switch D position signal input	In D: about 0 V In any position other than D: battery voltage
23*1	RED/WHT	ATPRVS (TRANSMISSION RANGE SWITCH RVS)	Detects transmission range switch RVS position signal input	In R: about 0 V In any position other than R: battery voltage
24	RED/WHT	ECT1 (ENGINE COOLANT TEMPERATURE (ECT) SENSOR 1)	Detects ECT sensor 1 signal	With ignition switch ON (II): about 0.1—4.8 V (depending on engine coolant temperature)
25*1	YEL	SHE (SHIFT SOLENOID VALVE E)	Drives shift solenoid valve E	With engine running in P and R: battery voltage With engine running in R (Reverse inhibit in R), N, D, D3 (in 1st gear), 2, and 1: about 0 V
26*1	BLU/YEL	LSC (A/T CLUTCH PRESSURE CONTROL SOLENOID VALVE C)	Drives A/T clutch pressure control solenoid valve C	With ignition switch ON (II): current controlled
27*1	GRN/RED	SHD (SHIFT SOLENOID VALVE D)	Drives shift solenoid valve D	With engine running in D (in 2nd and 5th gears), D3 (in 2nd gear), and 2: battery voltage With engine running in P, R, N, D (in 1st, 3rd and 4th gears), D3 (in 1st and 3rd gears), and 1: about 0V
28*1	RED/YEL	TATF (ATF TEMPERATURE SENSOR)	Detects ATF temperature signal	With ignition switch ON (II): about 0.2—4.8 V (about 1.8 V at operating temperature) (depending on ATF temperature)
29*1	BLU/YEL	ATPFWD (TRANSMISSION RANGE SWITCH FWD)	Detects transmission range switch FWD position signal	In D, D3, and 2 positions: about 0 V In any position other than D, D3, and 2: battery voltage

* 1: A/T

(cont'd)

System Description (cont'd)

ECM/PCM Inputs and Outputs at Connector B (△) (49P)

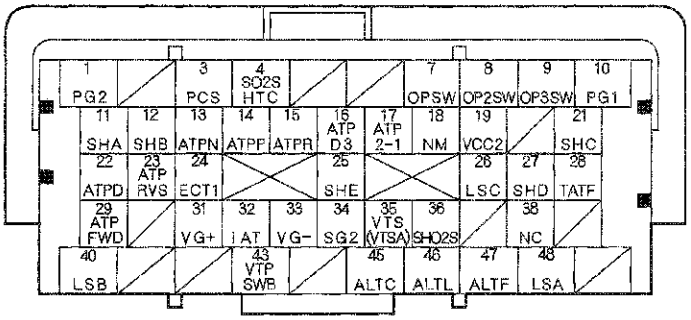

Terminal side of female terminals

NOTE: Standard battery voltage is about 12 V.

Terminal number	Wire color	Terminal name	Description	Signal
31	RED/BLK	VG+ (MASS AIR FLOW (MAF) SENSOR +SIDE)	Detects MAF sensor signal	At idle: about 1.3 V
32	RED/YEL	IAT (INTAKE AIR TEMPERATURE (IAT) SENSOR)	Detects IAT sensor signal	With ignition switch ON (II): about 0.1—4.0 V (about 1.8 V at normal operating temperature)
33	BLK/BLU	VG− (MASS AIR FLOW (MAF) SENSOR −SIDE)	Ground for MAF sensor signal	Less than 0.5 V at all times
34	GRN/BLK	SG2 (SENSOR GROUND)	Sensor ground	Less than 0.5 V at all times
35	GRN/YEL	VTS (VTSA)*2 (ROCKER ARM OIL CONTROL SOLENOID (A)*2)	Drives rocker arm oil control solenoid (A)*2	At idle: about 0 V
36	WHT/RED	SHO2S (SECONDARY HEATED OXYGEN SENSOR (SECONDARY HO2S) SENSOR 2)	Detects secondary HO2S (sensor 2) signal	With throttle fully opened from idle with fully warmed up engine: above 0.8 V While throttle quickly closed: below 0.1 V
38	BLK/WHT	NC (OUTPUT SHAFT (COUNTERSHAFT) SPEED SENSOR)	Detects output shaft (countershaft) speed sensor signal	With ignition switch ON (II): about 0 V or 5.0 V While driving: pulses
40*1	BRN	LSB (A/T CLUTCH PRESSURE CONTROL SOLENOID VALVE B)	Drives A/T clutch pressure control solenoid valve B	With ignition switch ON (II): current controlled
43*2	BLU	VTPSWB (ROCKER ARM OIL PRESSURE SWITCH B)	Detects rocker arm oil pressure switch B signal	At idle: about 0 V
45	WHT/GRN	ALTC (ALTERNATOR CONTROL)	Sends alternator control signal	With fully warmed up engine running: about 7.5 V (depending on electrical load)
46	WHT/BLU	ALTL (ALTERNATOR L SIGNAL)	Detects alternator L signal	With ignition switch ON (II): about 0 V With engine running: battery voltage
47	WHT/RED	ALTF (ALTERNATOR FR SIGNAL)	Detects alternator FR signal	With engine running: about 0.5—2.7 V (depending on electrical load)
48*1	RED/BLK	LSA (A/T CLUTCH PRESSURE CONTROL SOLENOID VALVE A)	Drives A/T clutch pressure control solenoid valve A	With ignition switch ON (II): current controlled

* 1: A/T
* 2: PZEV model

ECM/PCM Inputs and Outputs at Connector C (○) (49P)

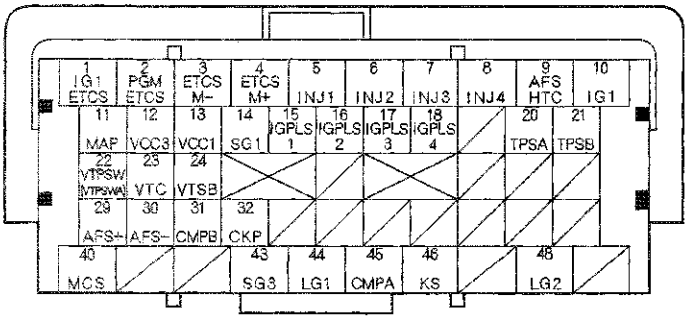

Terminal side of female terminals

NOTE: Standard battery voltage is about 12 V.

Terminal number	Wire color	Terminal name	Description	Signal
1	YEL/GRN	IG1ETCS (IGNITION SIGNAL ETCS)	Detects ignition signal	With ignition switch ON (II): battery voltage
2	BLK	PGMETCS (POWER GROUND ETCS)	Ground circuit for ECM/PCM	Less than 0.5 V at all times
3	GRN/YEL	ETCSM − (THROTTLE ACTUATOR −SIDE)	Ground for throttle actuator	With ignition switch ON (II): about 0 V
4	BLU/RED	ETCSM+ (THROTTLE ACTUATOR +SIDE)	Drives throttle actuator	With ignition switch ON (II): about 0 V
5	BRN	INJ1 (No. 1 INJECTOR)	Drives No. 1 injector	With ignition switch ON (II): battery voltage At idle: duty controlled
6	RED	INJ2 (No. 2 INJECTOR)	Drives No. 2 injector	
7	BLU	INJ3 (No. 3 INJECTOR)	Drives No. 3 injector	
8	YEL	INJ4 (No. 4 INJECTOR)	Drives No. 4 injector	
9	GRN	AFSHTC (AIR FUEL RATIO (A/F) SENSOR HEATER CONTROL (SENSOR 1))	Drives A/F sensor heater (sensor 1)	With ignition switch ON (II): battery voltage With fully warmed up engine running: pulses
10	BLK/RED	IG1 (IGNITION SIGNAL)	Detects ignition signal	With ignition switch ON (II): battery voltage
11	GRN/RED	MAP (MANIFOLD ABSOLUTE PRESSURE (MAP) SENSOR)	Detects MAP sensor signal	With ignition switch ON (II): about 3.0 V At idle: about 1.0 V (depending on engine speed)
12	BLU	VCC3 (SENSOR VOLTAGE)	Provides sensor reference voltage	With ignition switch ON (II): about 5.0 V
13	YEL/RED	VCC1 (SENSOR VOLTAGE)	Provides sensor reference voltage	With ignition switch ON (II): about 5.0 V
14	GRN/WHT	SG1 (SENSOR GROUND)	Sensor ground	Less than 0.5 V at all times
15	YEL/GRN	IGPLS1 (No. 1 IGNITION COIL PULSE)	Drives No. 1 ignition coil	With ignition switch ON (II): about 0 V With engine running: pulses
16	BLU/RED	IGPLS2 (No. 2 IGNITION COIL PULSE)	Drives No. 2 ignition coil	
17	WHT/BLU	IGPLS3 (No. 3 IGNITION COIL PULSE)	Drives No. 3 ignition coil	
18	BRN	IGPLS4 (No. 4 IGNITION COIL PULSE)	Drives No. 4 ignition coil	
20	RED/BLK	TPSA (THROTTLE POSITION (TP) SENSOR A)	Detects TP sensor A signal	With throttle fully open: about 3.9 V With throttle fully closed: about 0.8 V
21	RED/BLU	TPSB (THROTTLE POSITION (TP) SENSOR B)	Detects TP sensor B signal	With throttle fully open: about 4.1 V With throttle fully closed: about 1.7 V

(cont'd)

System Description (cont'd)

ECM/PCM Inputs and Outputs at Connector C (○) (49P)

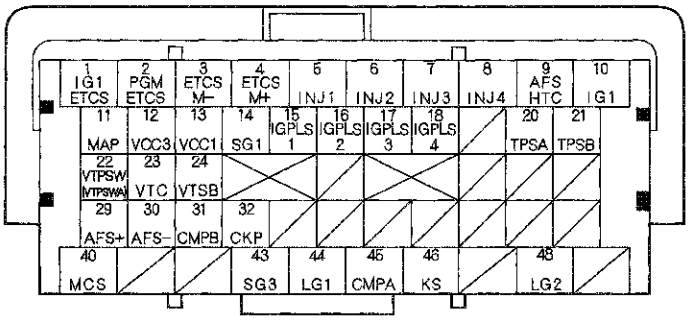

Terminal side of female terminals

NOTE: Standard battery voltage is about 12 V.

Terminal number	Wire color	Terminal name	Description	Signal
22	BLU/BLK	VTPSW (VTPSWA)*2 (ROCKER ARM OIL PRESSURE SWITCH (A)*2)	Detects rocker arm oil pressure switch (A)*2 signal	At idle: about 0 V
23	BLU/WHT	VTC (VTC OIL CONTROL SOLENOID VALVE)	Drives VTC oil control solenoid valve	With ignition switch ON (II): about 0 V
24*2	GRN/RED	VTSB (ROCKER ARM OIL CONTROL SOLENOID B)	Drives rocker arm oil control solenoid B	At idle: about 0 V
29	RED	AFS+ (AIR FUEL RATIO (A/F) SENSOR (SENSOR 1) +SIDE)	Detects A/F sensor (sensor 1) signal	At idle: about 2.2 V
30	RED/YEL	AFS− (AIR FUEL RATIO (A/F) SENSOR (SENSOR 1) −SIDE)	Detects A/F sensor (sensor 1) signal	At idle: about 1.8 V
31	GRN	CMPB (CAMSHAFT POSITION (CMP) SENSOR B)	Detects CMP sensor B signal	With engine running: pulses
32	BLU/YEL	CKP (CRANKSHAFT POSITION (CKP) SENSOR)	Detects CKP sensor signal	With engine running: pulses
40	BLU/YEL	MCS (ENGINE MOUNT CONTROL SOLENOID VALVE)	Drives engine mount control solenoid	At idle: about 0 V Above idle: battery voltage
43	GRN	SG3 (SENSOR GROUND)	Sensor ground	Less than 0.5 V at all times
44	BRN/YEL	LG1 (LOGIC GROUND)	Ground circuit for ECM/PCM	Less than 0.5 V at all times
45	BLU/WHT	CMPA (CAMSHAFT POSITION (CMP) SENSOR A)	Detects CMP sensor A signal	With engine running: pulses
46	RED/BLU	KS (KNOCK SENSOR)	Detects knock sensor signal	With engine knocking: pulses
48	BRN/YEL	LG2 (LOGIC GROUND)	Ground circuit for ECM/PCM	Less than 0.5 V at all times

* 2: PZEV model

PGM-FI System

The programmed fuel injection (PGM-FI) system is a sequential multiport fuel injection system.

Air Conditioning (A/C) Compressor Clutch Relay
When the ECM/PCM receives a demand for cooling from the A/C system, it delays the compressor from being energized, and enriches the mixture to assure smooth transition to the A/C mode.

Air Fuel Ratio (A/F) Sensor
The A/F sensor operates over a wide air/fuel range. The A/F sensor is installed upstream of the WU-TWC, and sends signals to the ECM/PCM which varies the duration of fuel injection accordingly.

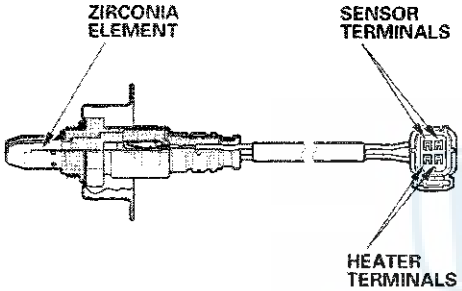

Barometric Pressure (BARO) Sensor
The BARO sensor is inside the ECM/PCM. It converts atmospheric pressure into a voltage signal that modifies the basic duration of the fuel injection discharge.

Camshaft Position (CMP) Sensor B
CMP sensor B detects the position of the No. 1 cylinder as a reference for sequential fuel injection to each cylinder.

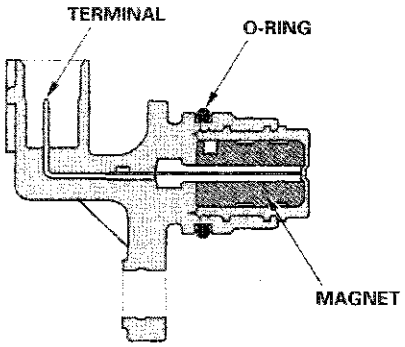

Crankshaft Position (CKP) Sensor
The CKP sensor detects crankshaft speed and is used by the ECM/PCM to determine ignition timing, timing for the fuel injection of each cylinder, and engine misfire detection.

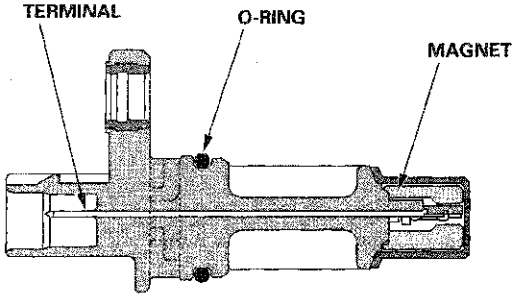

Engine Coolant Temperature (ECT) Sensors 1 and 2
ECT sensors 1 and 2 are temperature dependent resistors (thermistors). The resistance decreases as the engine coolant temperature increases.

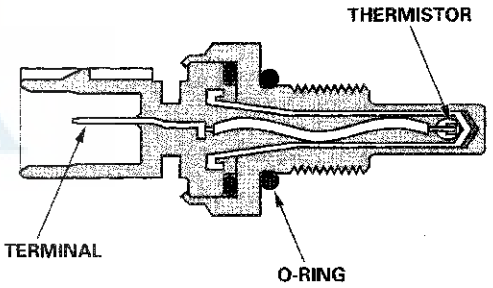

Ignition Timing Control
The ECM/PCM contains the memory for basic ignition timing at various engine speeds and manifold absolute pressures. It also adjusts the timing according to engine coolant temperature and intake air temperature.

Injector Timing and Duration
The ECM/PCM contains the memory for basic discharge duration at various engine speeds and manifold pressures. The basic discharge duration, after being read out from the memory, is further modified by signals sent from various sensors to obtain the final discharge duration.
By monitoring long term fuel trim, the ECM/PCM can detect long term malfunctions in the fuel system and set DTCs (diagnostic trouble codes) if needed.

(cont'd)

System Description (cont'd)

Knock Sensor
The knock control system adjusts the ignition timing to minimize knock.

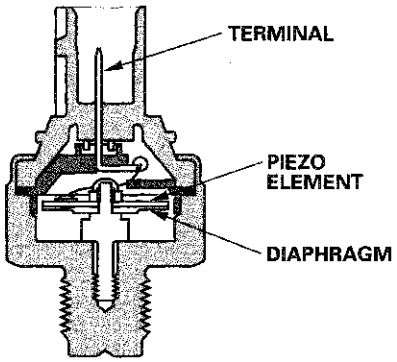

Manifold Absolute Pressure (MAP) Sensor
The MAP sensor converts manifold absolute pressures into electrical signals to the ECM/PCM.

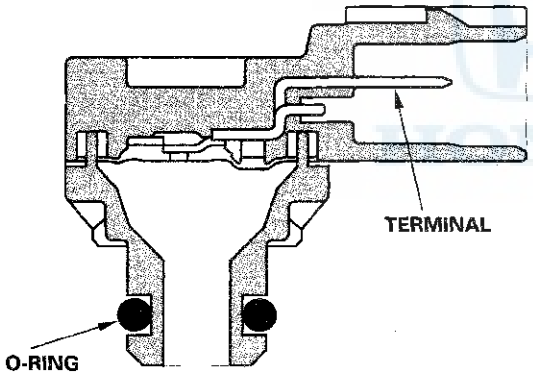

Malfunction Indicator Lamp (MIL) Indication (In relation to Readiness Codes)
The vehicle has certain readiness codes that are part of the on-board diagnostics for the emissions systems. If the vehicle's battery has been disconnected or gone dead, if DTCs have been cleared, or if the ECM/PCM has been reset, these codes are reset. In some states, part of the emissions testing is to make sure these codes are set to complete. If all of them are not set to complete, the vehicle may fail the test, or the test cannot be finished.

To check if the readiness codes are set to complete, turn the ignition switch to ON (II), but do not start the engine. The MIL will come on for 15—20 seconds. If it then goes off, the readiness codes are complete. If it flashes five times, one or more readiness codes are not complete. To set each code, drive the vehicle or run the engine as described in the procedures (see page 11-62).

Mass Air Flow (MAF) Sensor/Intake Air Temperature (IAT) Sensor
The mass air flow (MAF) sensor/intake air temperature (IAT) sensor contains a hot wire sensor, a cold wire sensor, and a thermistor. It is located in the intake air passage. The resistance of the hot wire sensor, the cold wire sensor, and the thermistor changes due to intake air temperature and air flow. The control circuit in the MAF sensor controls the current to keep the hot wire at a set temperature. The current is converted to voltage in the control circuit, then output to the ECM/PCM.

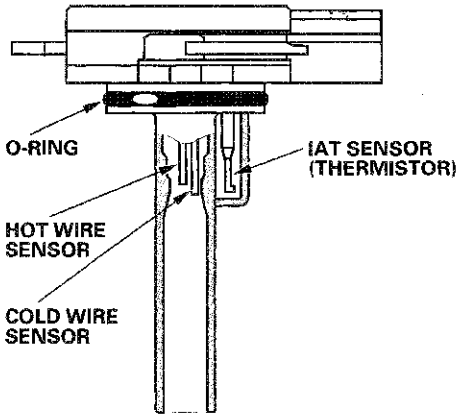

Output Shaft (Countershaft) Speed Sensor
This sensor detects countershaft speed.

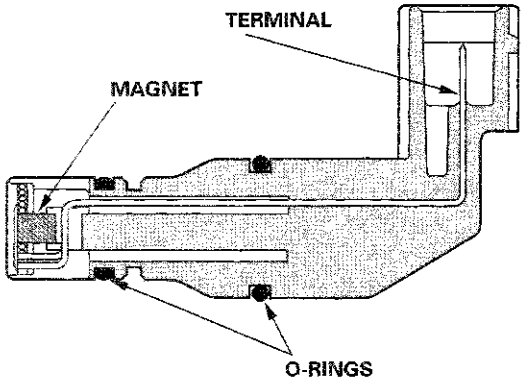

M/T model shown

Secondary Heated Oxygen Sensor (Secondary HO2S)
The secondary HO2S detects the oxygen content in the exhaust gas downstream of the warm up three way catalytic converter (WU-TWC), and sends signals to the ECM/PCM which varies the duration of fuel injection accordingly. To stabilize its output, the sensor has an internal heater. The ECM/PCM compares the HO2S output with the A/F sensor output to determine catalyst efficiency. The secondary HO2S is installed downstream of the WU-TWC.

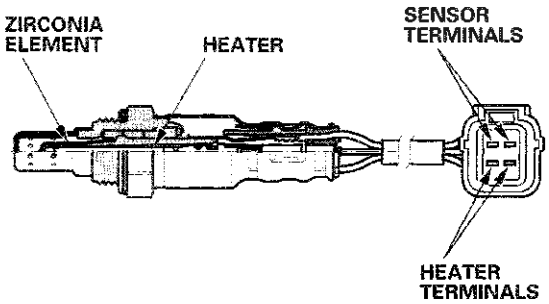

Electronic Throttle Control System

The throttle is electronically controlled by the electronic throttle control system. Refer to the system diagram to see a functional layout of the system.

Idle control: When the engine is idling, the ECM/PCM controls the throttle actuator to maintain the proper idle speed according to engine loads.

Acceleration control: When the accelerator pedal is pressed, the ECM/PCM opens the throttle valve depending on the accelerator pedal position (APP) sensor signal.

Cruise control: The ECM/PCM controls the throttle actuator to maintain set speed when the cruise control is operating. The throttle actuator takes the place of the cruise control actuator.

Accelerator Pedal Position (APP) Sensor
As the accelerator pedal position changes, the sensor varies the signal voltage to the ECM/PCM.

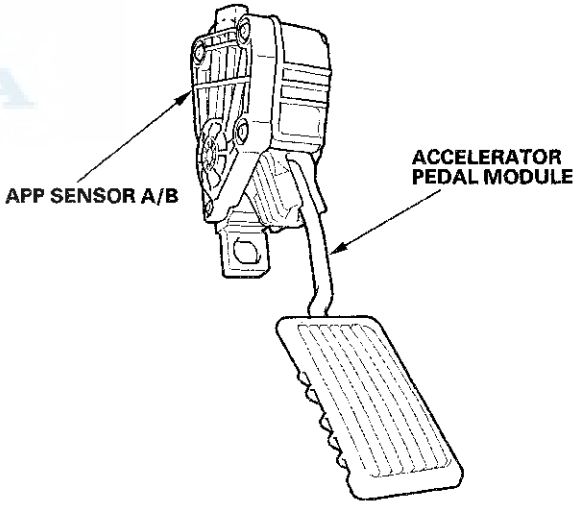

(cont'd)

System Description (cont'd)

Throttle Body
The throttle body is a single-barrel side draft type. The lower portion of the throttle valve is heated by engine coolant from the cylinder head to prevent icing of the throttle plate.

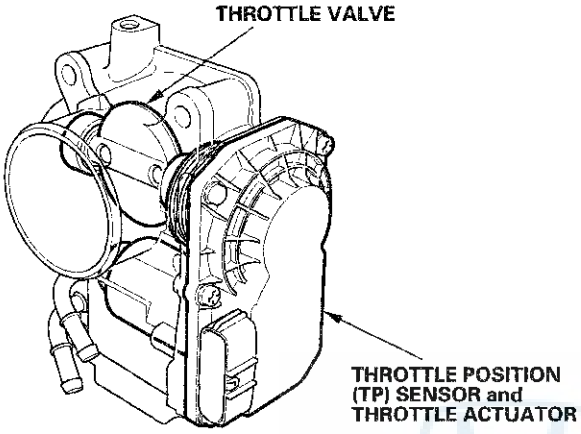

Idle Control System

When the engine is cold, the A/C compressor is on, the transmission is in gear, the brake pedal is pressed, the power steering load is high, or the alternator is charging, the ECM/PCM controls current to the throttle actuator to maintain the correct idle speed.

Brake Pedal Position Switch
The brake pedal position switch signals the ECM/PCM when the brake pedal is pressed.

Power Steering Pressure (PSP) Switch
The PSP switch signals the ECM/PCM when the power steering load is high.

Fuel Supply System

Fuel Cutoff Control
During deceleration with the throttle valve closed, current to the injectors is cut off to improve fuel economy at engine speeds over 850 rpm (A/T) or 1,000 rpm (M/T). Fuel cutoff also occurs when the engine speed exceeds 7,000 rpm (LX) or 7,300 rpm (EX), regardless of the position of the throttle valve, to protect the engine from over-revving. When the vehicle is stopped, the ECM/PCM cuts the fuel at engine speeds over 5,000 rpm (A/T), 7,000 rpm (LX M/T), or 7,100 rpm (EX M/T). The engine speed of fuel cut is lower on a cold engine.

Fuel Pump Control
When the ignition switch is turned to ON (II), the ECM/PCM grounds PGM-FI main relay 2 (FUEL PUMP) which feeds current to the fuel pump for 2 seconds to pressurize the fuel system. With the engine running, the ECM/PCM grounds PGM-FI main relay 2 (FUEL PUMP) and feeds current to the fuel pump. When the engine is not running and the ignition is ON (II), the ECM/PCM cuts ground to PGM-FI main relay 2 (FUEL PUMP) which cuts current to the fuel pump.

PGM-FI Main Relay 1 and 2
PGM-FI main relay 1 is energized whenever the ignition switch is ON (II) to supply battery voltage to the ECM/PCM, power to the injectors, and power for PGM-FI main relay 2 (FUEL PUMP). PGM-FI main relay 2 (FUEL PUMP) is energized to supply power to the fuel pump for 2 seconds when the ignition switch is turned to ON (II), and when the engine is cranking or running.

i-VTEC

- The i-VTEC system has a variable valve timing control (VTC) mechanism on the intake camshaft in addition to the usual VTEC.
  This system improves fuel efficiency and reduces exhaust emissions at all levels of engine speed, vehicle speed, and engine load.
- The VTEC system changes the intake valve lift and timing by using more than one cam profile.
- PZEV model: The VTEC system pauses one side of the exhaust valves in addition to changing the intake valve lift and timing.
- The VTC system changes the phase of the intake camshaft via oil pressure. It changes the intake valve timing continuously.

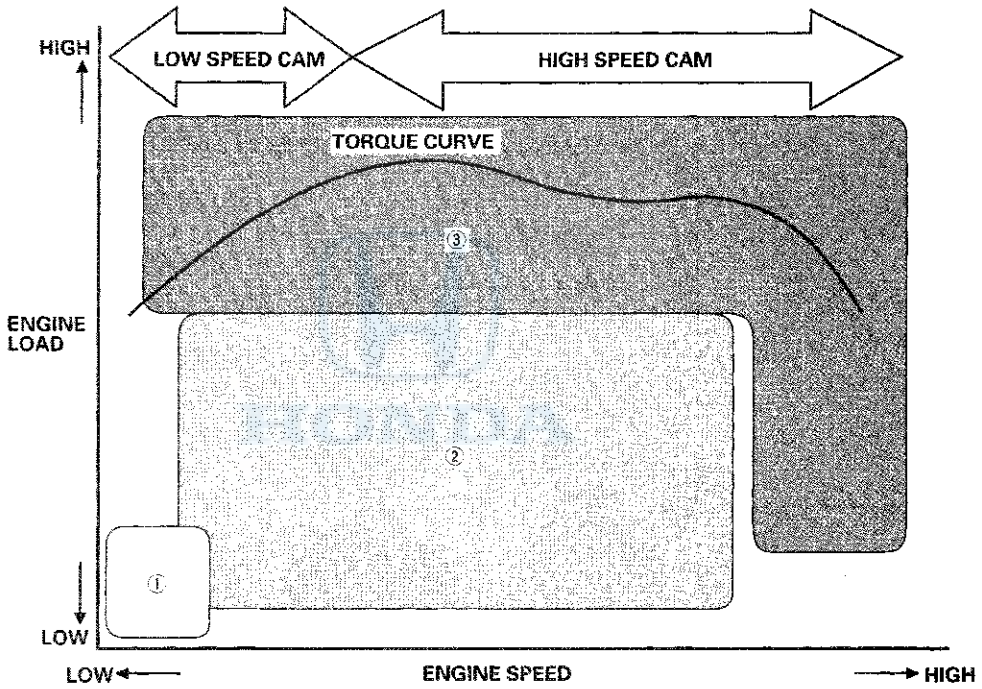

Driving Condition	VTC Control	Description
① Light-load	Base Position	For stable combustion the cam angle is retarded, and reduces the entry of exhaust gas into the cylinder.
② Medium/high-load	Advance Control	Cam phase angle is controlled to optimize valve timing, improving fuel efficiency and reducing emissions.
③ High speed	Advance-Base Position	To reduce pumping loss, the intake valve is closed quickly. This gives the air/fuel mixture a charging effect that helps to maximize engine power.

(cont'd)

System Description (cont'd)

VTC System

- The VTC system makes continuous intake valve timing changes based on operating conditions.
- Intake valve timing is optimized to allow the engine to produce maximum power.
- Cam angle is advanced to obtain the EGR effect and reduce pumping loss. The intake valve is closed quickly to reduce the entry of the air/fuel mixture into the intake port and improve the charging effect.
- The system reduces the cam advance at idle, stabilizes combustion, and reduces engine speed.
- If a malfunction occurs, the VTC system control is disabled and the valve timing is fixed at the fully retarded position.

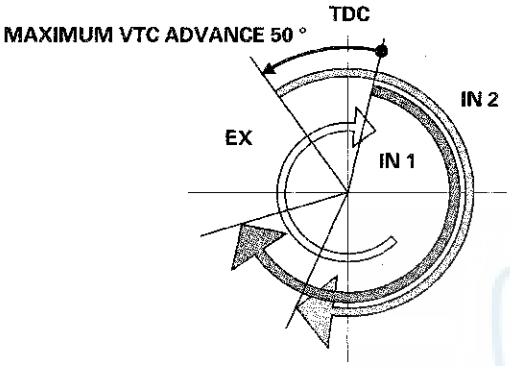

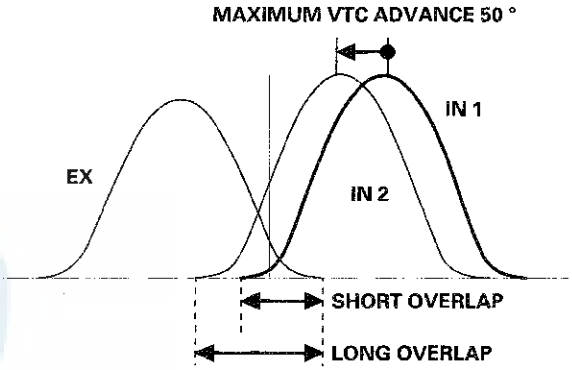

HONDA

VTC System Diagram

The VTC oil control solenoid valve controls oil pressure to the advance chamber/retard chamber of the VTC actuator according to a signal from the ECM/PCM. When the VTC actuator vanes rotate to the advance or retard position, the intake camshaft timing is changed.
CMP sensor A detects the intake camshaft angle and sends the information to the ECM/PCM. The ECM/PCM controls the VTC oil control solenoid valve as the intake camshaft angle changes.

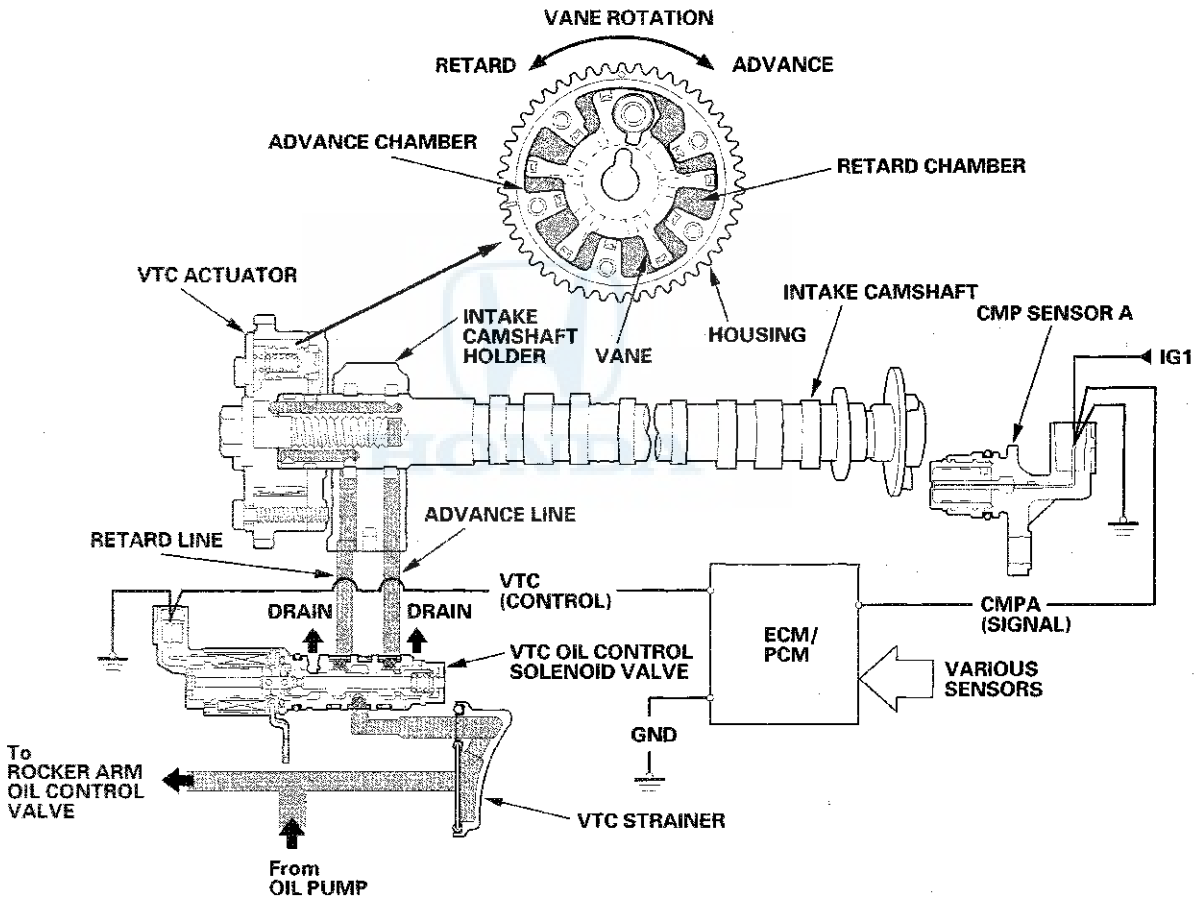

(cont'd)

System Description (cont'd)

VTEC System

Intake valve side (All models)
- The VTEC system changes the cam profile to correspond to engine speed. It maximizes torque at low engine speed and output at high engine speed.
- The low lift cam is used at low engine speeds, and the high lift cam is used at high engine speeds.
- The rocker arm oil control solenoid (rocker arm oil control solenoid A) switches the intake valve side of the VTEC system on and off; the solenoid is controlled by the ECM/PCM.
- The rocker arm oil pressure switch (rocker arm oil pressure switch A) detects VTEC system oil pressure (intake valve side) and sends this information to the ECM/PCM.

Exhaust valve side (PZEV model)
- The VTEC system switches the operation of one of the exhaust valves to pause and lift the valve.
- At idle and low engine speed, one side of the exhaust valves is paused, and the valve lifts when the engine speed goes up.
- The system reduces hydrocarbons (HC) exhaust emissions at low engine speed.
- Rocker arm oil control solenoid B switches the exhaust valve side of the VTEC system on and off; the solenoid is controlled by the PCM.
- Rocker arm oil pressure switch B detects the VTEC system oil pressure (exhaust valve side), and sends this information to the PCM.

All models except PZEV (Intake valve VTEC)

ENGINE SPEED	ROCKER ARM OIL CONTROL SOLENOID	ROCKER ARM OIL PRESSURE SWITCH	INTAKE VALVE LIFT
LOW	OFF	ON	LOW
HIGH	ON	OFF	HIGH

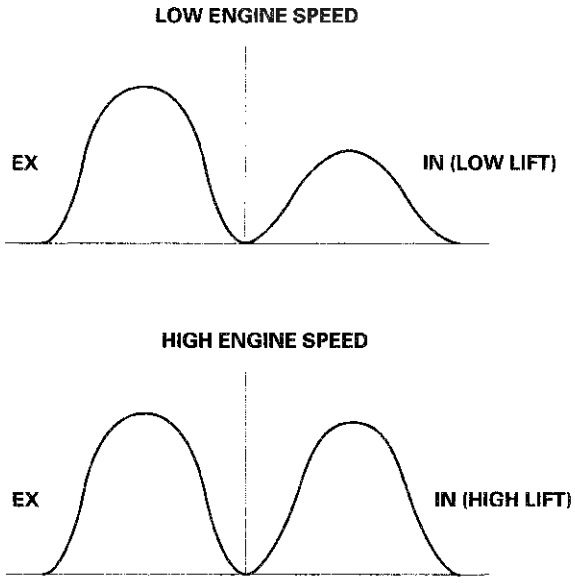

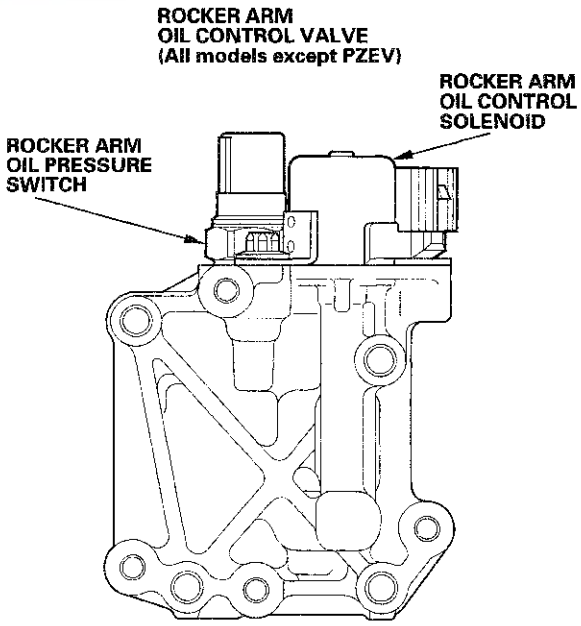

PZEV model (Intake and exhaust valve VTEC)

ENGINE SPEED	ROCKER ARM OIL CONTROL SOLENOID A	ROCKER ARM OIL PRESSURE SWITCH A	INTAKE VALVE LIFT	ROCKER ARM OIL CONTROL SOLENOID B	ROCKER ARM OIL PRESSURE SWITCH B	EXHAUST VALVE 2 OPERATION
IDLE-LOW	OFF	ON	LOW	OFF	ON	PAUSE
MID	OFF	ON	LOW	ON	OFF	LIFT
HIGH	ON	OFF	HIGH	ON	OFF	LIFT

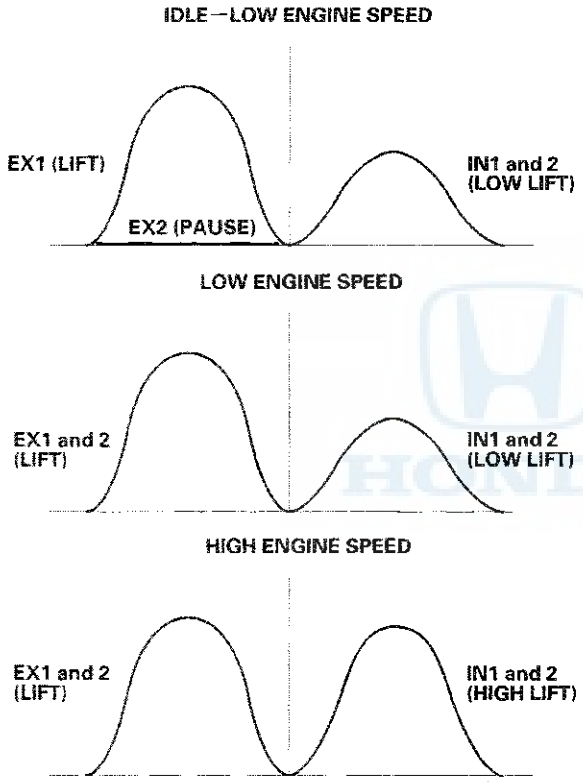

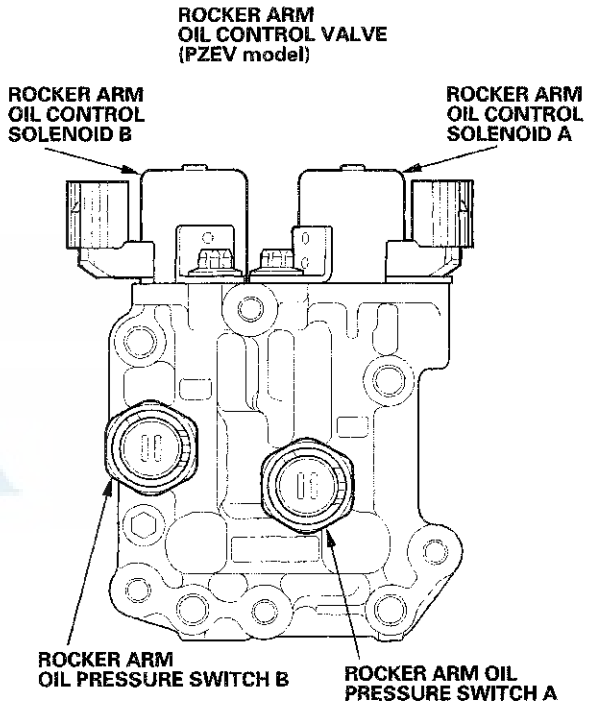

(cont'd)

System Description (cont'd)

VTEC System Operation

Intake valve side

At low engine speed, the rocker arm oil control solenoid (rocker arm oil control solenoid A) is turned off by the ECM/PCM. Oil pressure from the rocker arm oil control valve does not enter the intake rocker shaft. Each intake rocker arm is separated by a return spring and lifted by each low lift cam lobe.

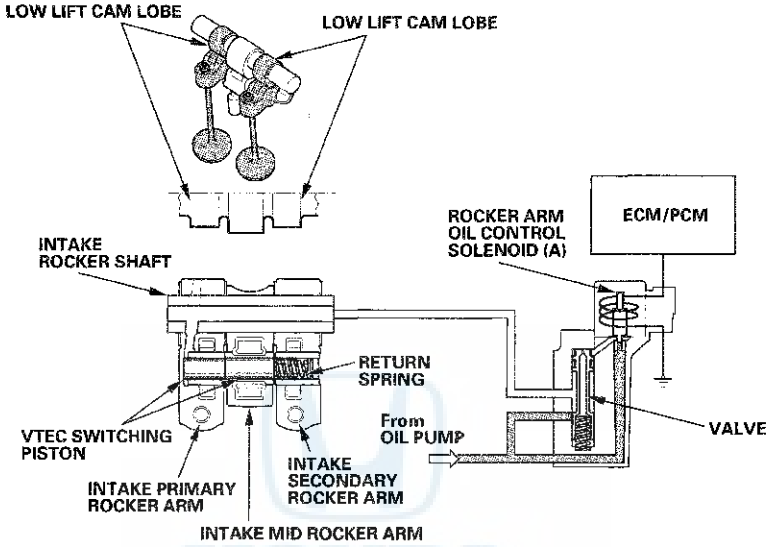

At high engine speed, the rocker arm oil control solenoid (rocker arm oil control solenoid A) is turned on by the ECM/PCM. Oil pressure from the rocker arm control solenoid enters into the primary intake rocker arm via the intake rocker shaft, and it moves the VTEC switching piston in the rocker arm.
This causes the VTEC switching piston to slide into the intake mid rocker arm and the intake secondary rocker arm, locking the rocker arms together. Both intake rocker arms are lifted by the high lift cam lobe.

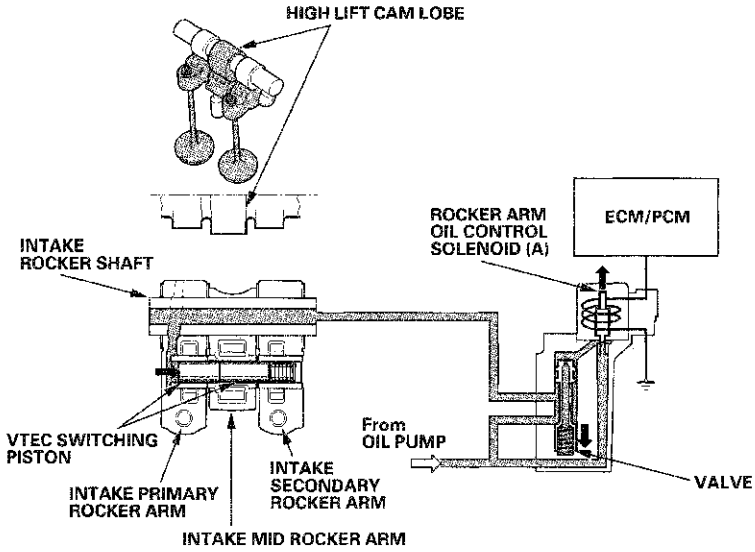

Exhaust valve side (PZEV model)
At idle and low engine speed, rocker arm oil control solenoid B is turned off by the PCM. Oil pressure from the rocker arm oil control valve does not enter the exhaust rocker shaft. Each exhaust rocker arm is separated by a return spring, and lifted by a timing cam lobe. The exhaust primary rocker arm is moved by the normal lift cam lobe (valve active), and the exhaust secondary rocker arm is moved by the no lift cam lobe (valve pause).

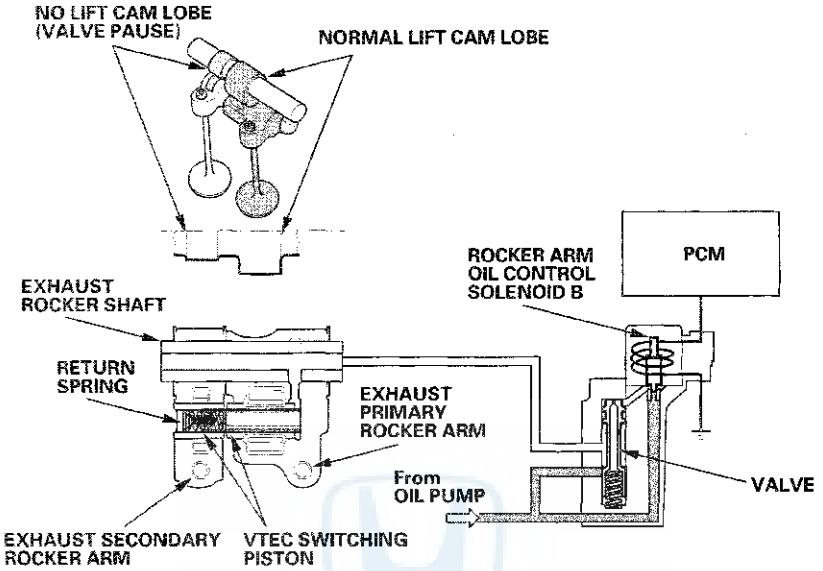

When the engine speed reaches 2,500 rpm or more, rocker arm oil control solenoid B is turned on by the PCM. Oil pressure from the rocker arm oil control solenoid enters into the primary exhaust rocker arm via the exhaust rocker shaft, and it moves the VTEC switching piston in the rocker arm. This causes the VTEC switching piston to slide into the exhaust secondary rocker arm, locking the exhaust rocker arms together. Both exhaust rocker arms are moved by the normal lift cam lobe (valve active).

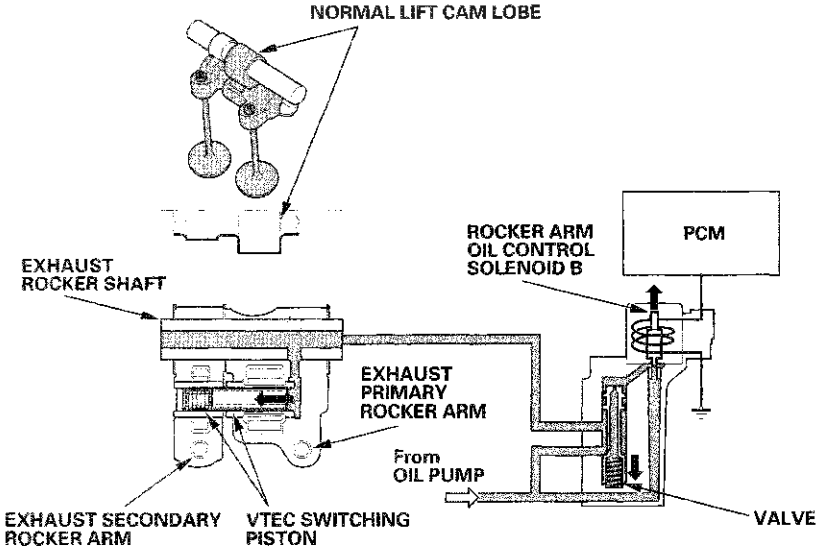

(cont'd)

System Description (cont'd)

Catalytic Converter System

Warm Up Three Way Catalytic Converter (WU-TWC) and Under-floor Three Way Catalytic Converter (Under-floor TWC)
The WU-TWC/Under-floor TWC converts hydrocarbons (HC), carbon monoxide (CO), and oxides of nitrogen (NOx) in the exhaust gas to carbon dioxide (CO_2), nitrogen (N_2), and water vapor.

WU-TWC (ATTACHED TO THE CYLINDER HEAD)

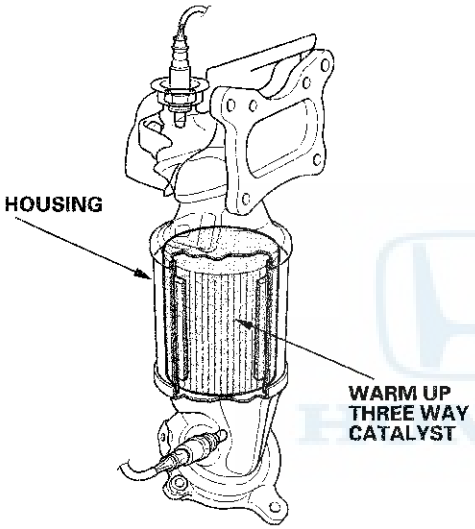

UNDER-FLOOR TWC

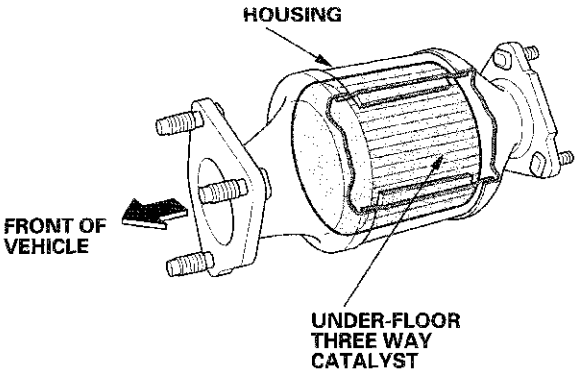

Positive Crankcase Ventilation (PCV) System

The PCV valve prevents blow-by gasses from escaping into the atmosphere by venting them into the intake manifold.

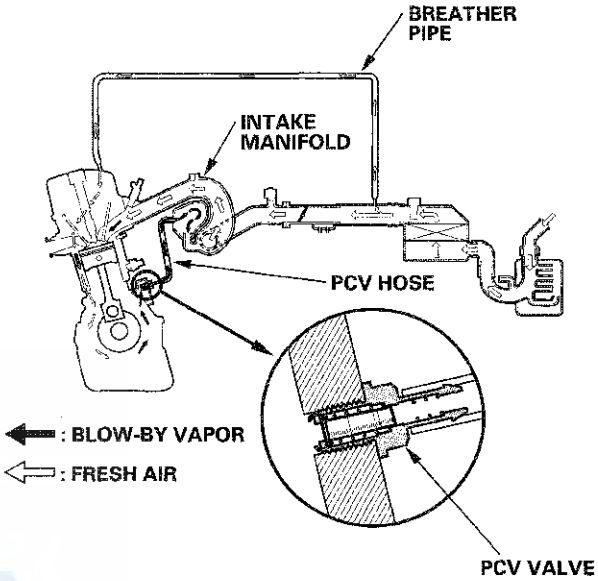

Evaporative Emission (EVAP) Control System

Refer to the system diagram to see a functional layout of the system.

EVAP Canister
The EVAP canister temporarily stores fuel vapor from the fuel tank until it can be purged back into the engine and burned.

EVAP Canister Purge Valve
When the engine coolant temperature is below 131 °F (55 °C), the ECM/PCM turns off the EVAP canister purge valve which cuts vacuum to the EVAP canister.

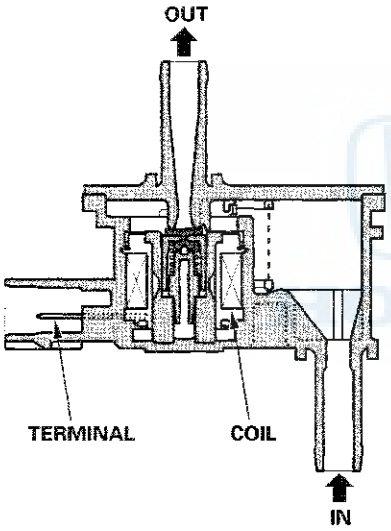

Fuel Tank Pressure (FTP) Sensor
The FTP sensor converts fuel tank absolute pressure into an electrical input to the ECM/PCM.

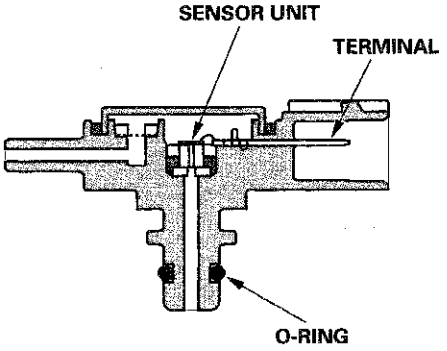

EVAP Canister Vent Shut Valve
The EVAP canister vent shut valve is on the EVAP canister.
The EVAP canister vent shut valve controls the venting of the EVAP canister.

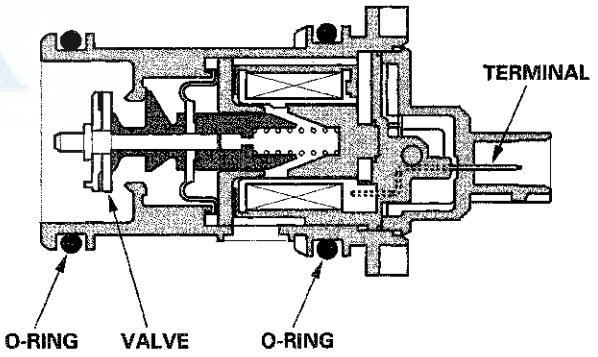

(cont'd)

System Description (cont'd)

Fuel Cap Warning Message

The ECM/PCM will detect a loose or missing fuel fill cap as an evaporative system leak, and alerts the driver by showing a warning message in the gauge display.

The first time a leak is detected, a CHECK FUEL CAP message appears on the gauge display (A). To scroll to another message, press the select/reset button. The CHECK FUEL CAP message appears each time you restart the engine until the system turns the message off. Turn the engine off, then replace or tighten the fuel fill cap until it clicks at least once.

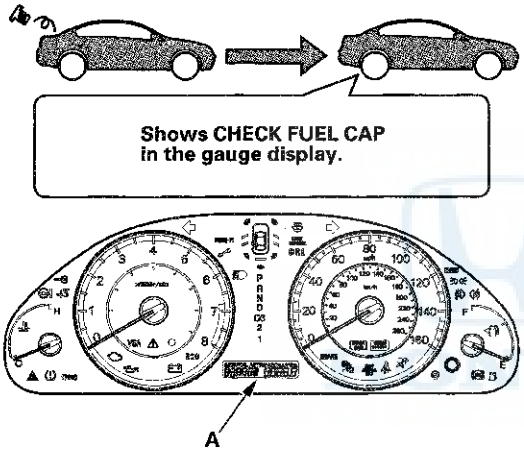

To make the message go off (with the HDS)

Procedure

1. Tighten the fuel fill cap until it clicks.
2. Clear the Temporary DTC with the HDS.
3. Verify there is no leak by doing the EVAP FUNCTION TEST in the INSPECTION MENU with the HDS.

To make the message go off (without the HDS)

Procedure

1. Tighten the fuel fill cap until it clicks.
2. Start the engine, then turn the ignition switch to LOCK (0).
3. Repeat step 2 two more times.

Electronic Throttle Control System Diagram

The electronic throttle control system consists of the throttle actuator, throttle position (TP) sensor A/B, accelerator pedal position (APP) sensor A/B, the electronic throttle control system (ETCS) control relay, and the ECM/PCM.

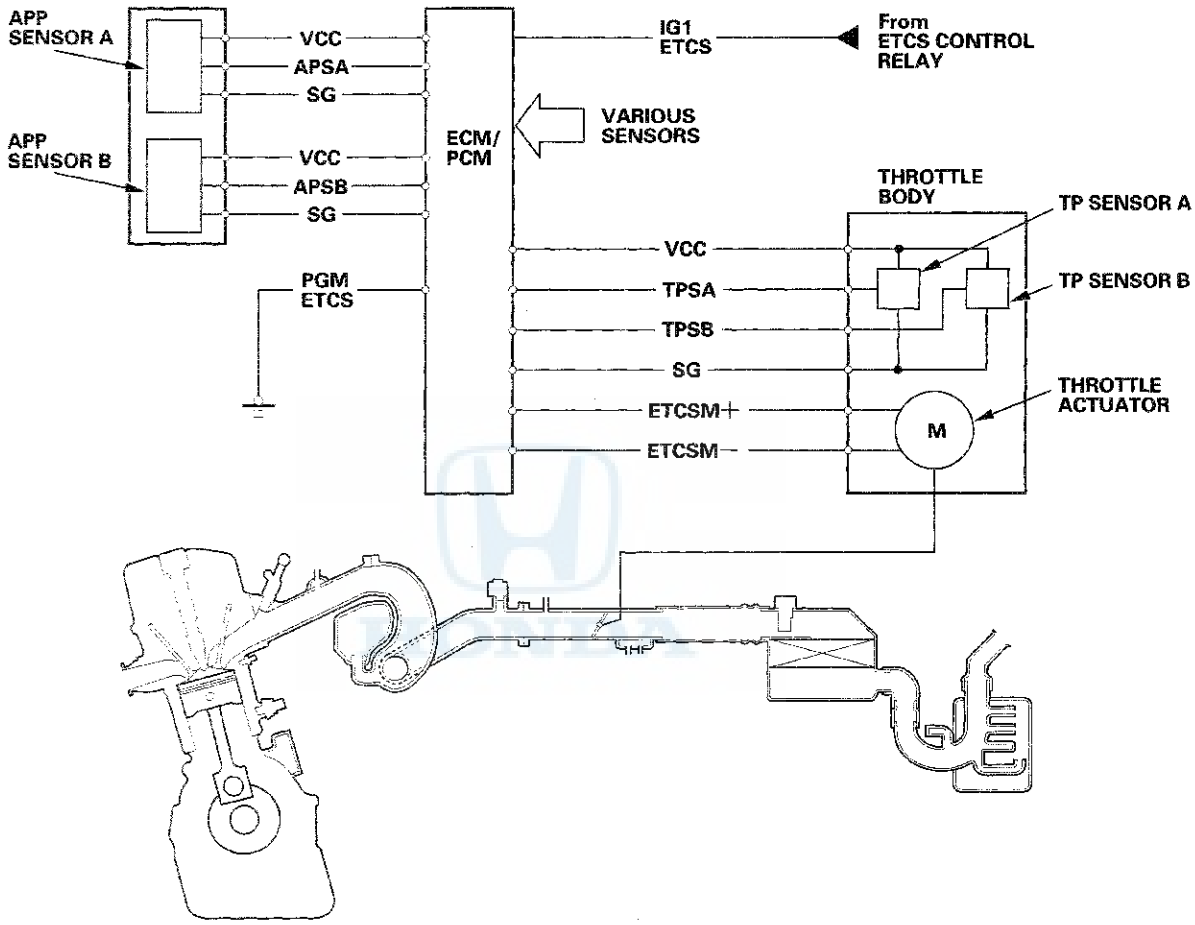

(cont'd)

System Description (cont'd)

Evaporative Emission (EVAP) Control Diagram

The EVAP controls minimize the amount of fuel vapor escaping to the atmosphere. Vapor from the fuel tank is temporarily stored in the EVAP canister until it can be purged from the canister into the engine and burned.

The EVAP canister is purged by drawing fresh air through it and into a port on the intake manifold.
The purging vacuum is controlled by the EVAP canister purge valve, which operates whenever engine coolant temperature is above 131 °F (55 °C).

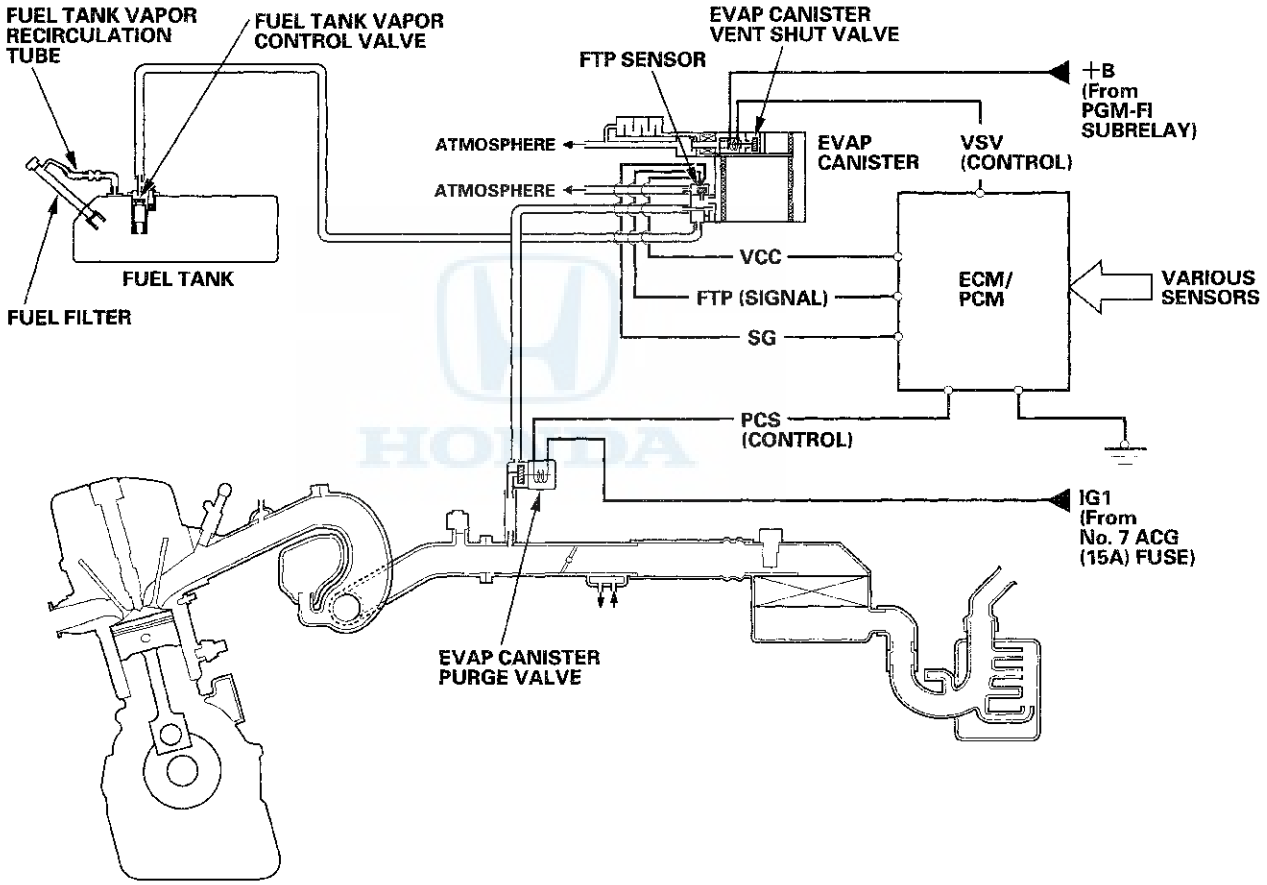

ECM/PCM Circuit Diagram

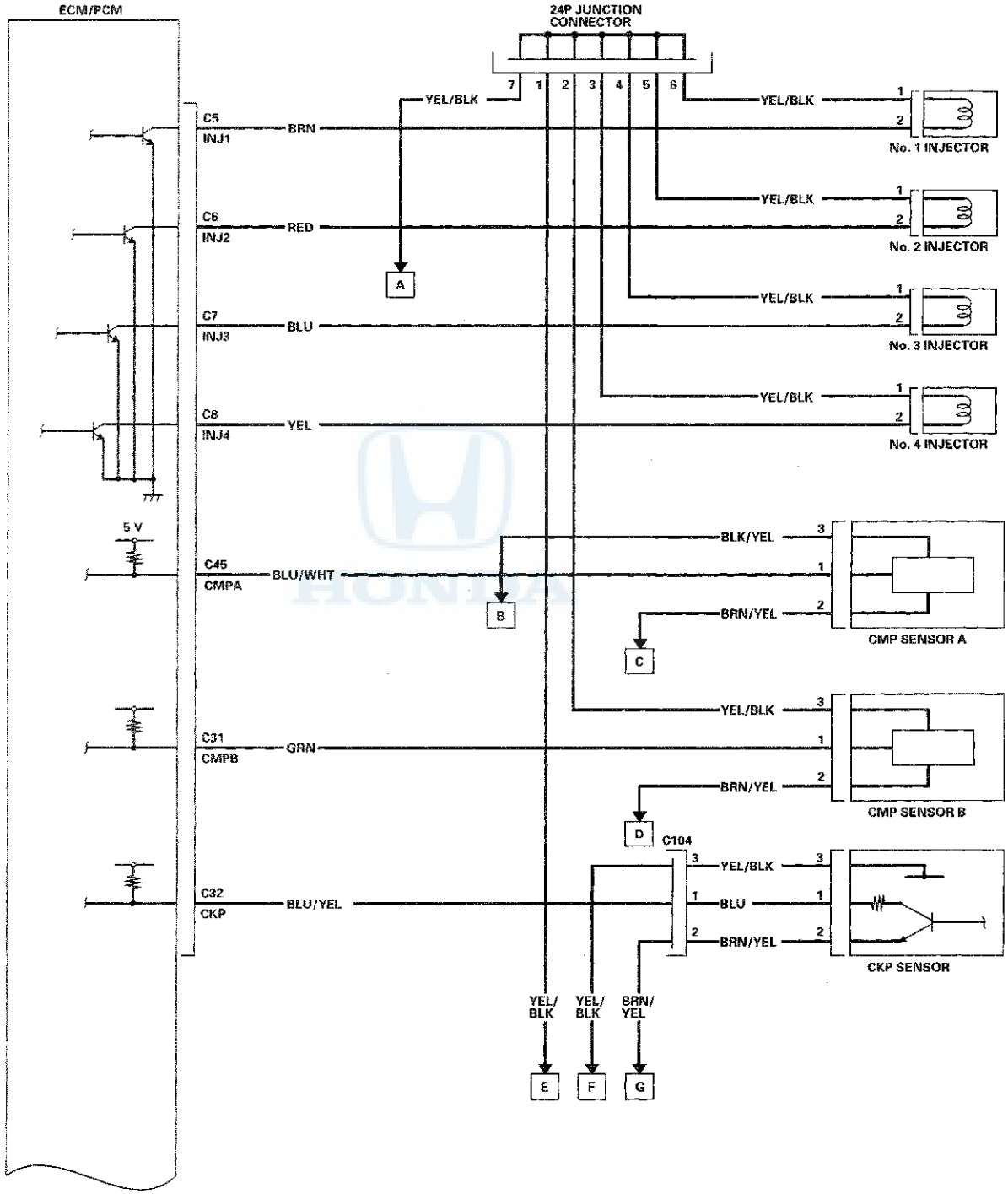

(cont'd)

System Description (cont'd)

ECM/PCM Circuit Diagram (cont'd)

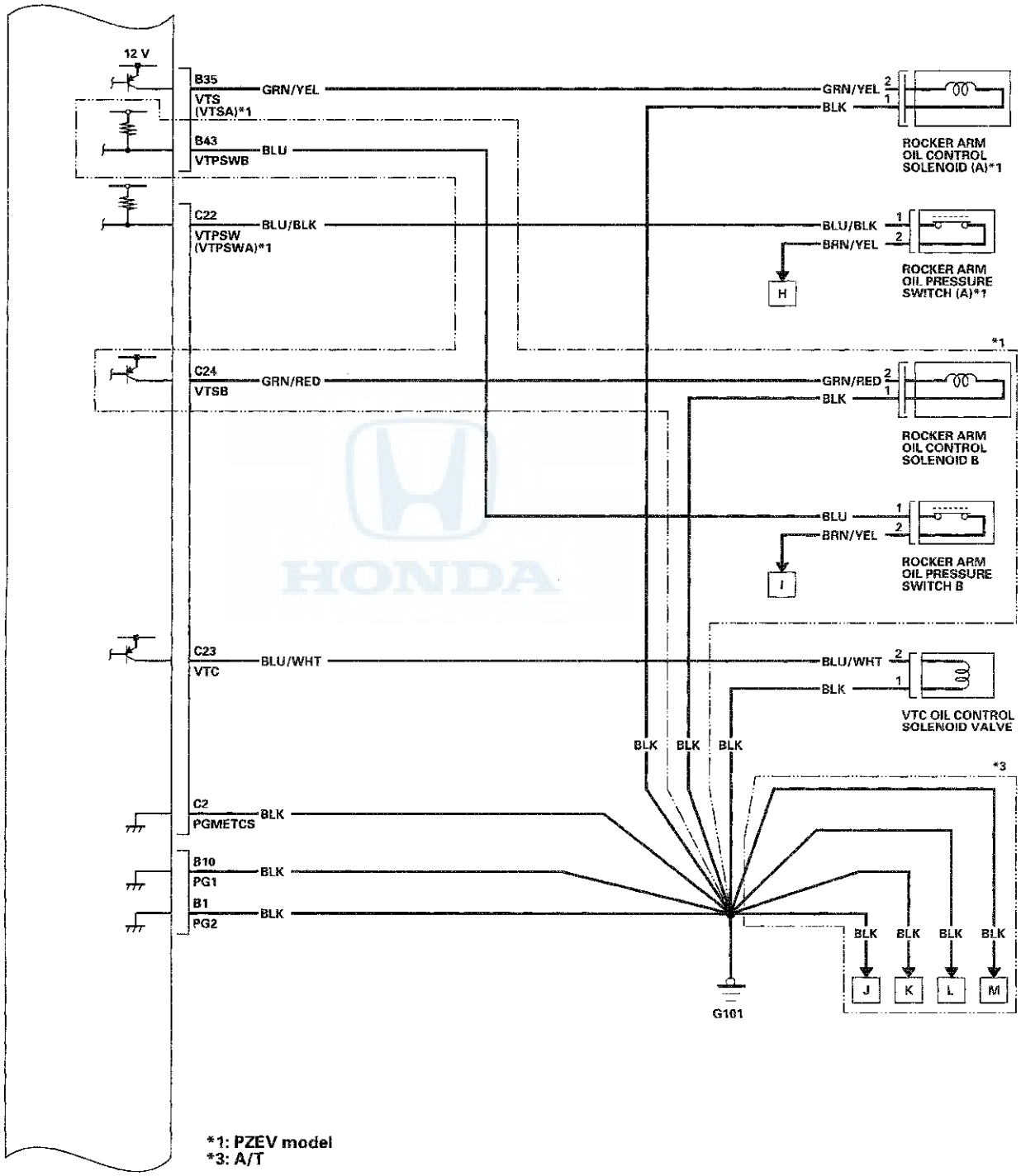

*1: PZEV model
*3: A/T

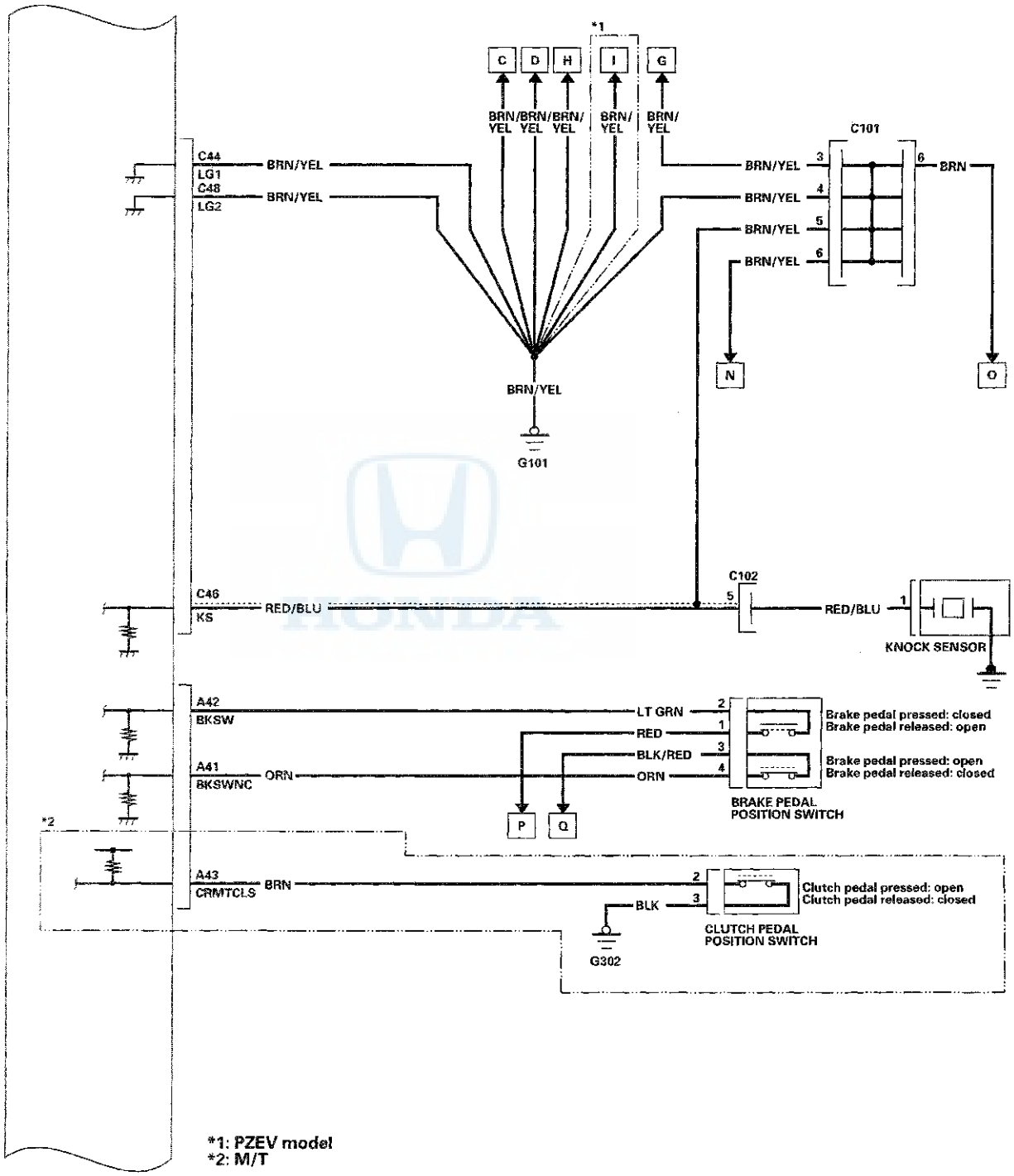

*1: PZEV model
*2: M/T

(cont'd)

System Description (cont'd)

ECM/PCM Circuit Diagram (cont'd)

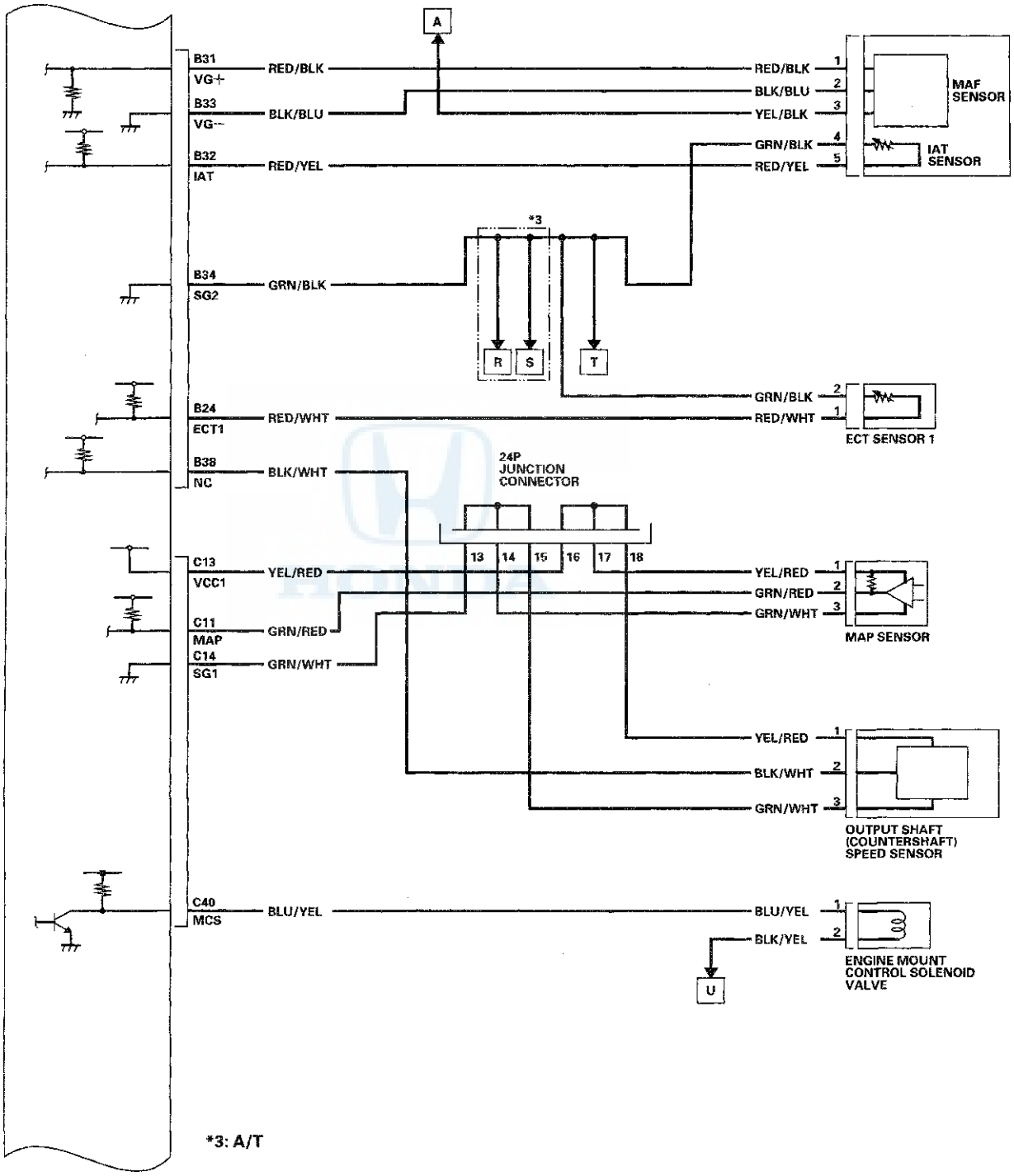

*3: A/T

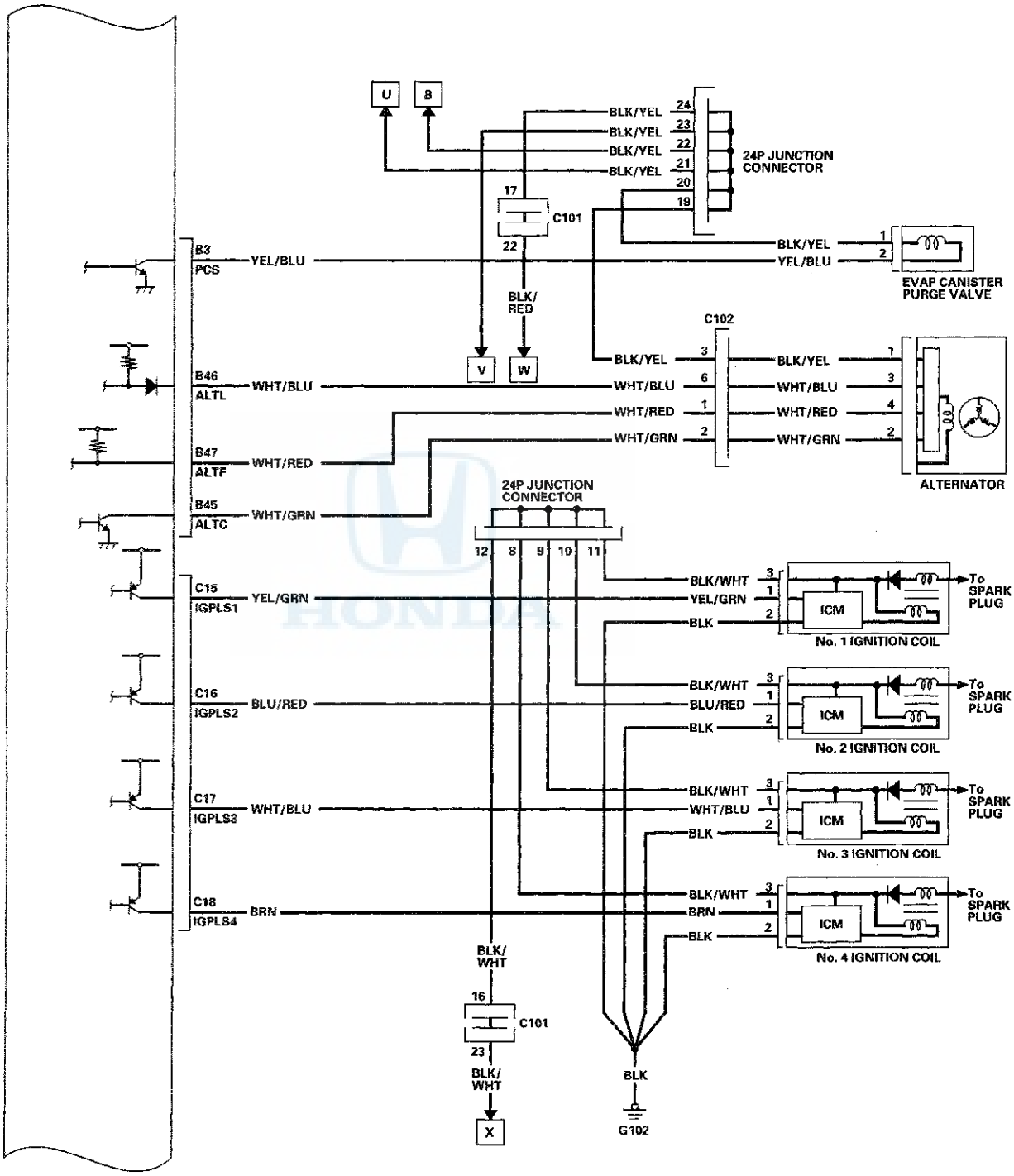
U
B
BLK/YEL
24
23
22
21
20
19
24P JUNCTION CONNECTOR
17
C101
22
B3
PCS
YEL/BLU
BLK/YEL
YEL/BLU
EVAP CANISTER PURGE VALVE
BLK/RED
C102
V
W
B46
ALTL
WHT/BLU
BLK/YEL
WHT/BLU
WHT/RED
WHT/GRN
ALTERNATOR
B47
ALTF
WHT/RED
B45
ALTC
WHT/GRN
24P JUNCTION CONNECTOR
12
8
9
10
11
C15
IGPLS1
YEL/GRN
BLK/WHT
YEL/GRN
BLK
ICM
To SPARK PLUG
No. 1 IGNITION COIL
C16
IGPLS2
BLU/RED
BLK/WHT
BLU/RED
BLK
No. 2 IGNITION COIL
C17
IGPLS3
WHT/BLU
BLK/WHT
WHT/BLU
BLK
No. 3 IGNITION COIL
C18
IGPLS4
BRN
BLK/WHT
BRN
BLK
No. 4 IGNITION COIL
BLK/WHT
16
C101
23
BLK/WHT
X
BLK
G102

(cont'd)

System Description (cont'd)

ECM/PCM Circuit Diagram (cont'd)

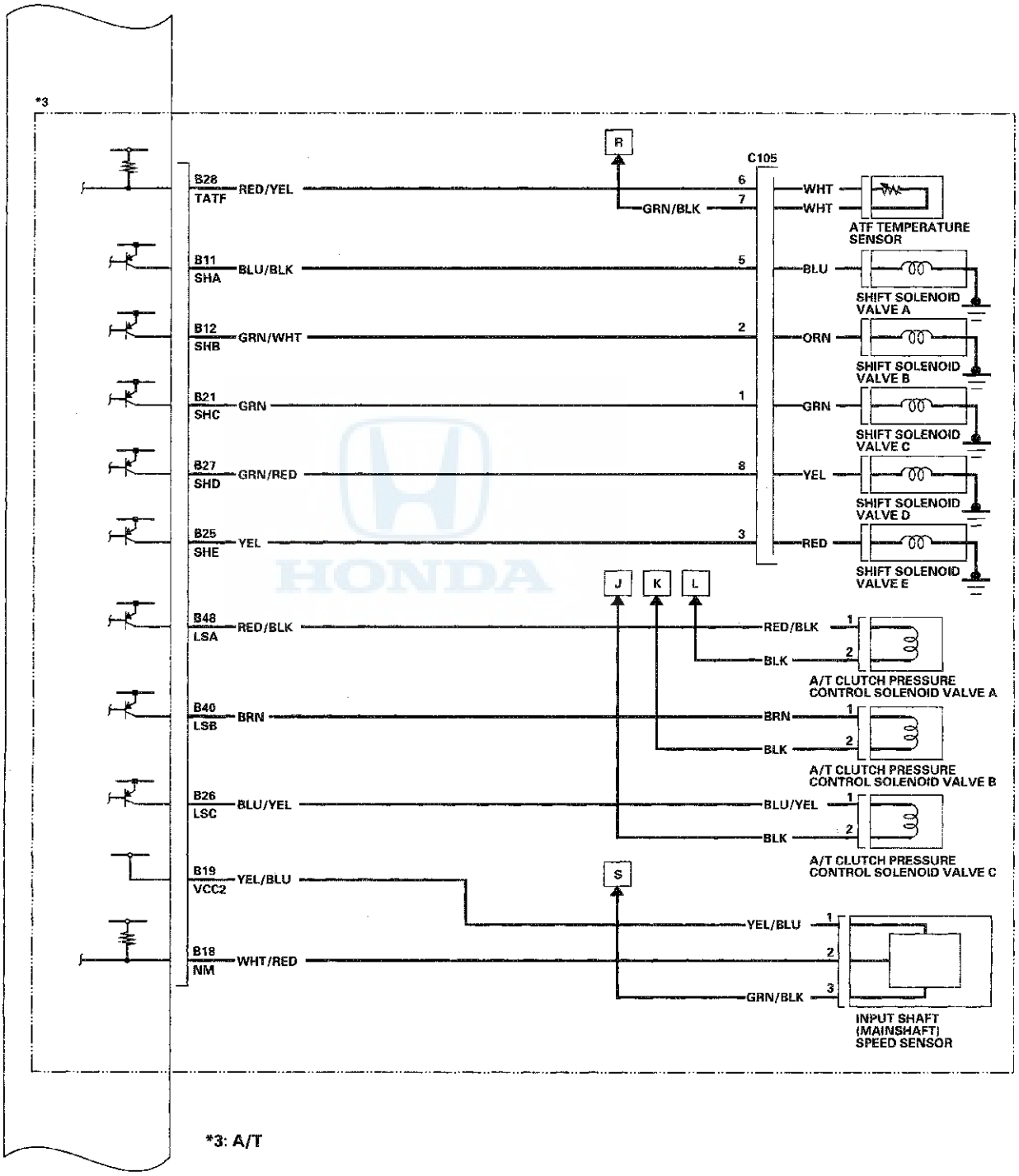

*3: A/T

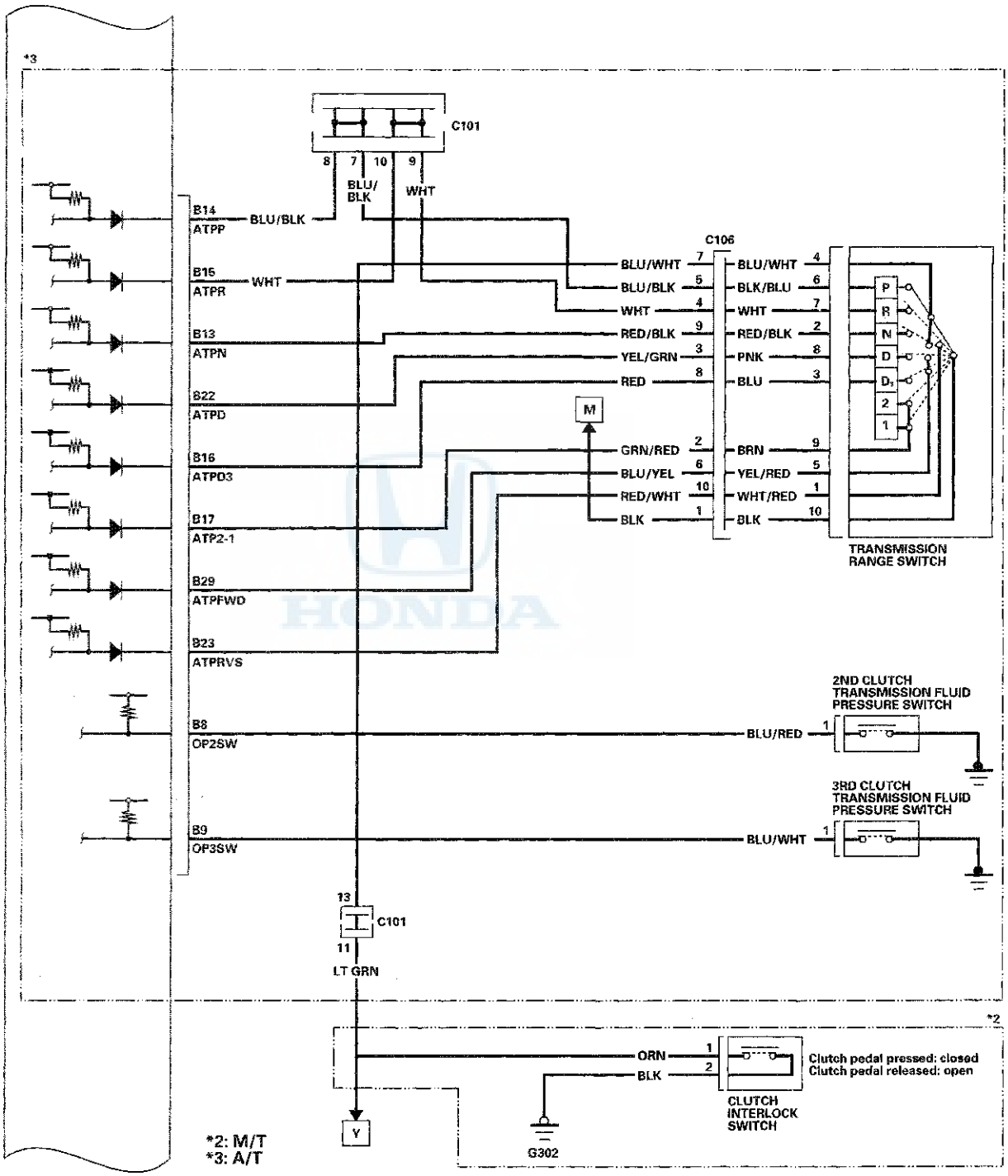
*3
C101
8
7
10
9
BLU/BLK
WHT
B14
ATPP
BLU/BLK
B15
ATPR
WHT
B13
ATPN
B22
ATPD
B16
ATPD3
B17
ATP2-1
B29
ATPFWD
B23
ATPRVS
B8
OP2SW
B9
OP3SW
C106
BLU/WHT
BLU/BLK
WHT
RED/BLK
YEL/GRN
RED
GRN/RED
BLU/YEL
RED/WHT
BLK
BLU/WHT
BLK/BLU
WHT
RED/BLK
PNK
BLU
BRN
YEL/RED
WHT/RED
BLK
M
P
R
N
D
D3
2
1
TRANSMISSION RANGE SWITCH
2ND CLUTCH TRANSMISSION FLUID PRESSURE SWITCH
BLU/RED
3RD CLUTCH TRANSMISSION FLUID PRESSURE SWITCH
BLU/WHT
13
C101
11
LT GRN
*2
ORN
BLK
Clutch pedal pressed: closed
Clutch pedal released: open
CLUTCH INTERLOCK SWITCH
Y
G302
*2: M/T
*3: A/T

(cont'd)

System Description (cont'd)

ECM/PCM Circuit Diagram (cont'd)

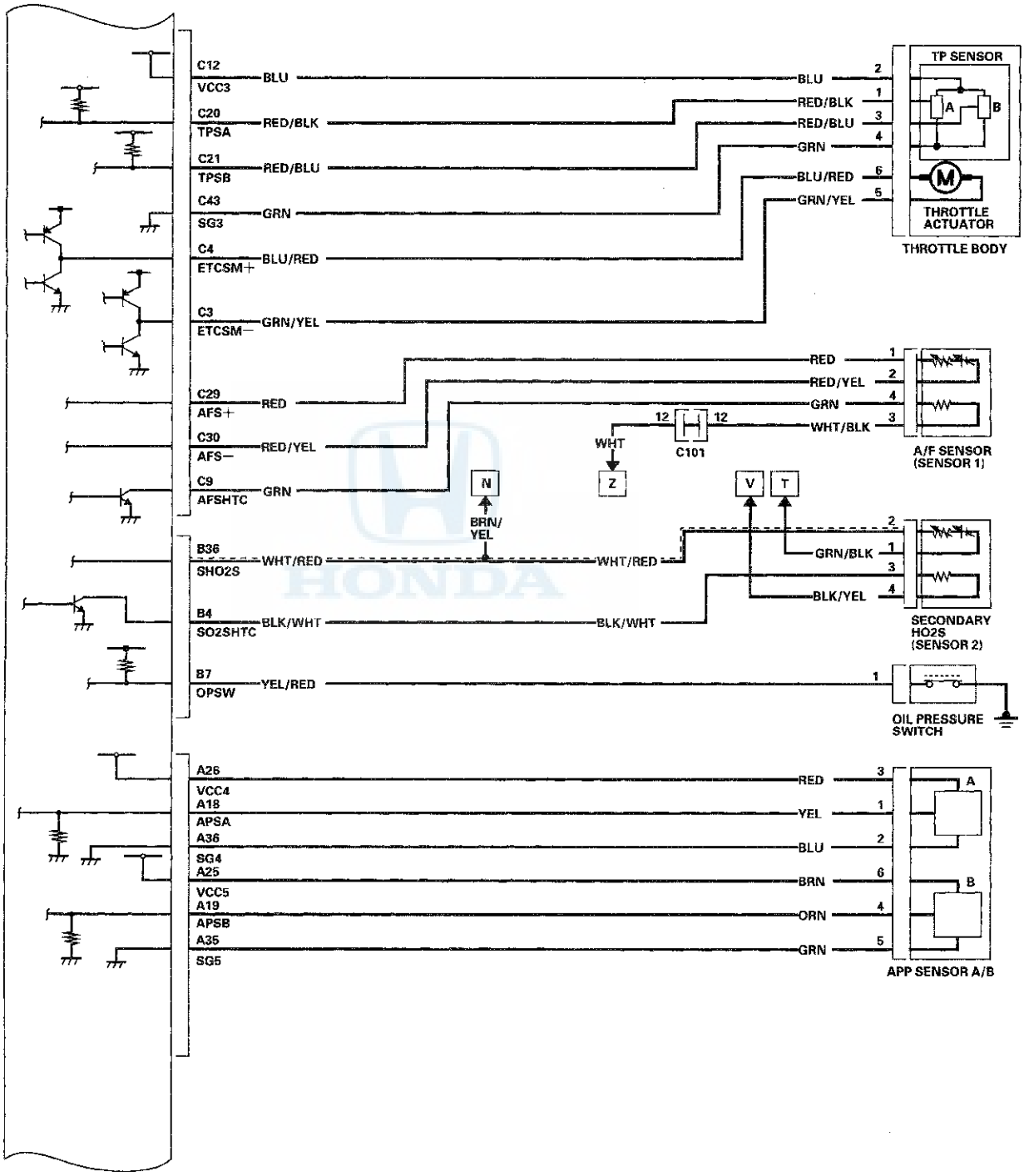

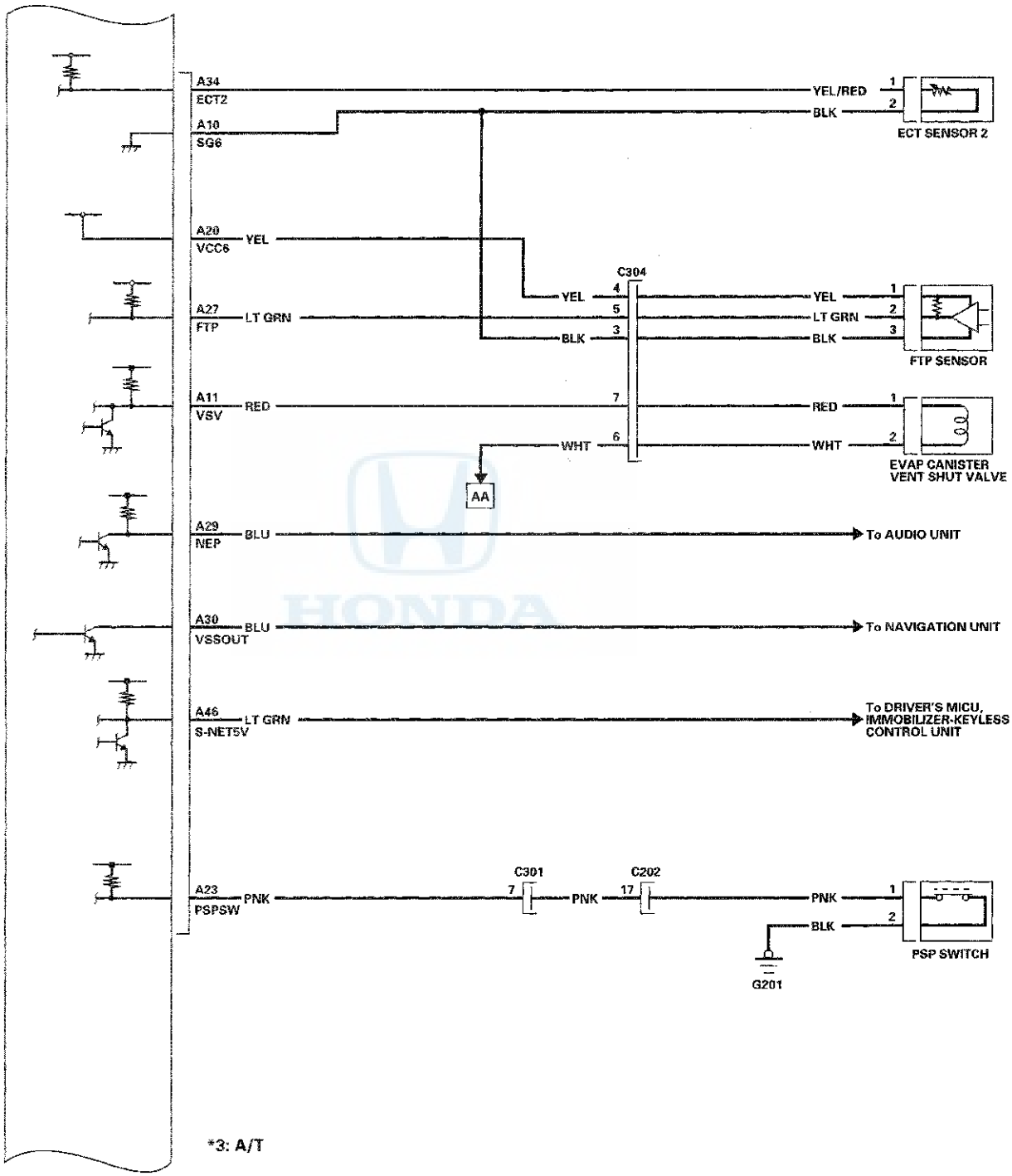
A34
ECT2
A10
SG6
YEL/RED
BLK
ECT SENSOR 2
A20
VCC6
YEL
C304
A27
FTP
LT GRN
YEL
BLK
FTP SENSOR
A11
VSV
RED
WHT
EVAP CANISTER
VENT SHUT VALVE
AA
A29
NEP
BLU
To AUDIO UNIT
A30
VSSOUT
BLU
To NAVIGATION UNIT
A46
S-NET5V
LT GRN
To DRIVER'S MICU,
IMMOBILIZER-KEYLESS
CONTROL UNIT
A23
PSPSW
PNK
C301
C202
PSP SWITCH
G201

*3: A/T

(cont'd)

System Description (cont'd)

ECM/PCM Circuit Diagram (cont'd)

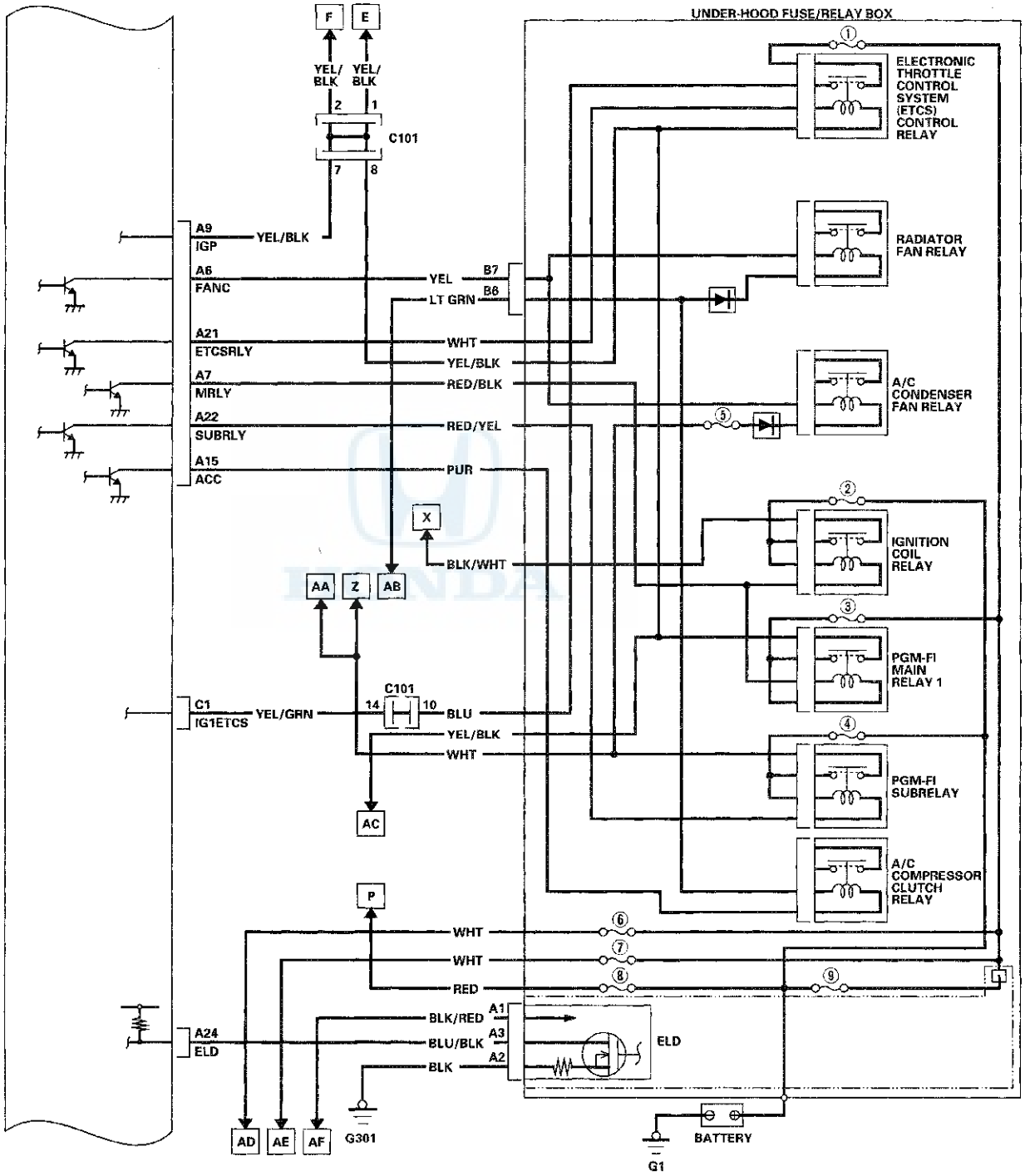

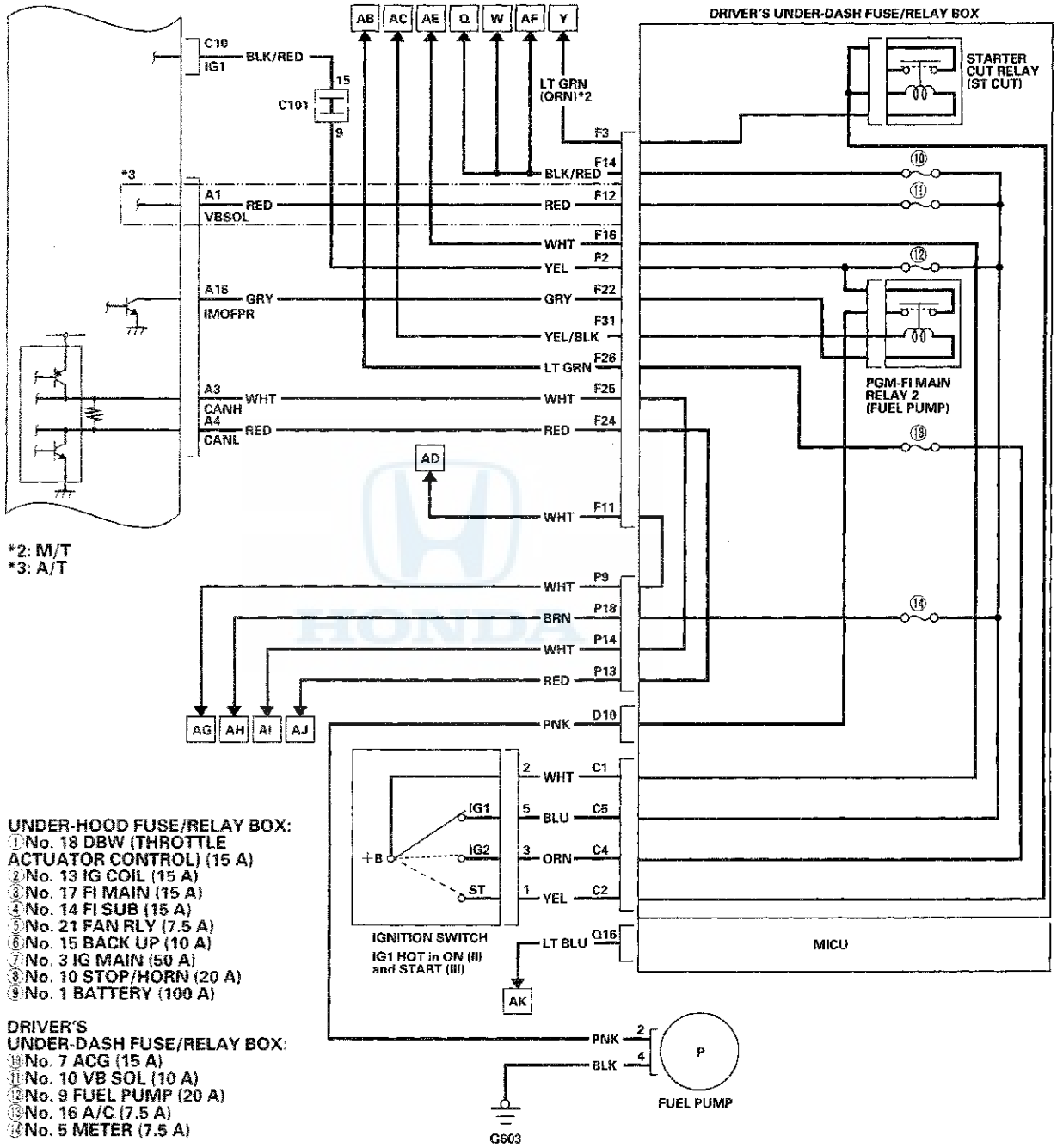

*2: M/T
*3: A/T

UNDER-HOOD FUSE/RELAY BOX:
⑩ No. 18 DBW (THROTTLE ACTUATOR CONTROL) (15 A)
⑪ No. 13 IG COIL (15 A)
⑫ No. 17 FI MAIN (15 A)
⑬ No. 14 FI SUB (15 A)
⑭ No. 21 FAN RLY (7.5 A)
⑮ No. 15 BACK UP (10 A)
⑯ No. 3 IG MAIN (50 A)
⑰ No. 10 STOP/HORN (20 A)
⑱ No. 1 BATTERY (100 A)

DRIVER'S UNDER-DASH FUSE/RELAY BOX:
⑩ No. 7 ACG (15 A)
⑪ No. 10 VB SOL (10 A)
⑫ No. 9 FUEL PUMP (20 A)
⑬ No. 16 A/C (7.5 A)
⑭ No. 5 METER (7.5 A)

(cont'd)

System Description (cont'd)

ECM/PCM Circuit Diagram (cont'd)

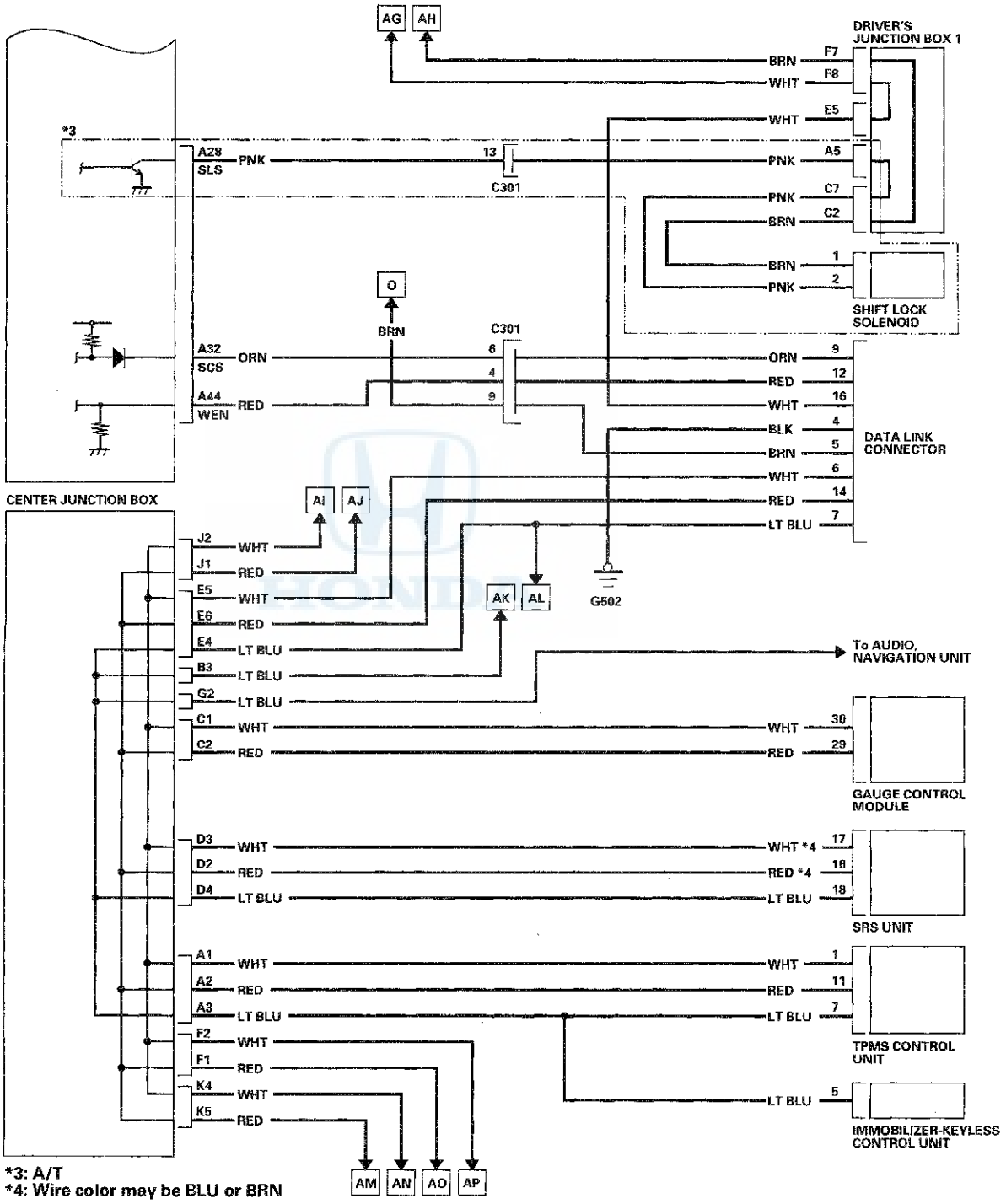

*3: A/T
*4: Wire color may be BLU or BRN

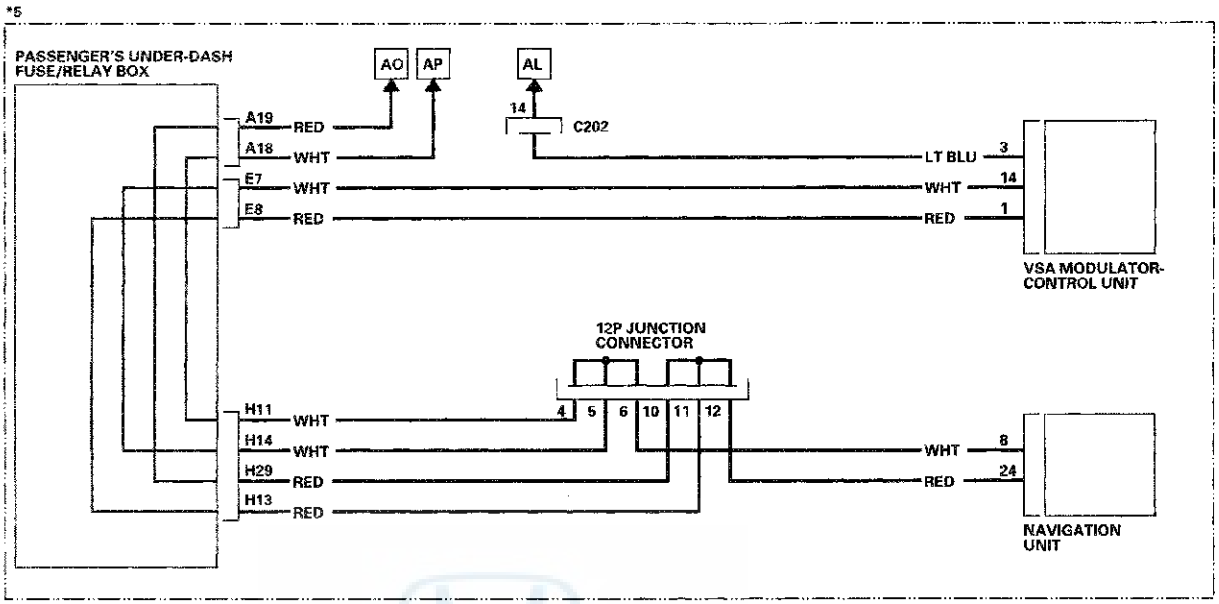

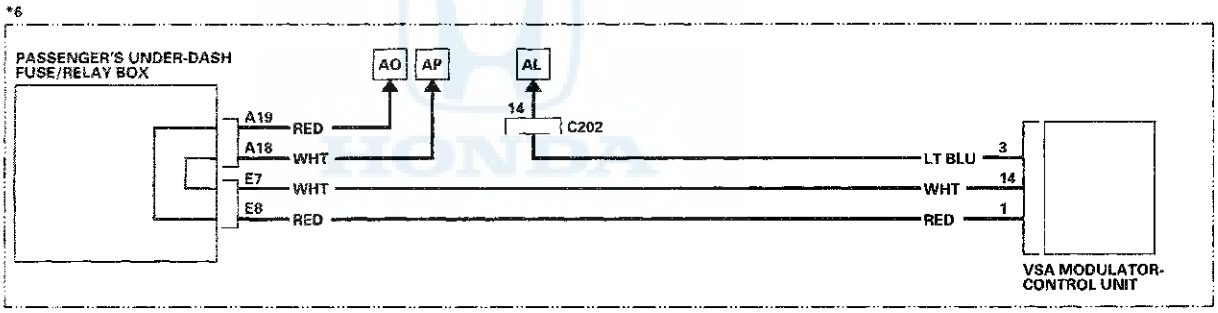

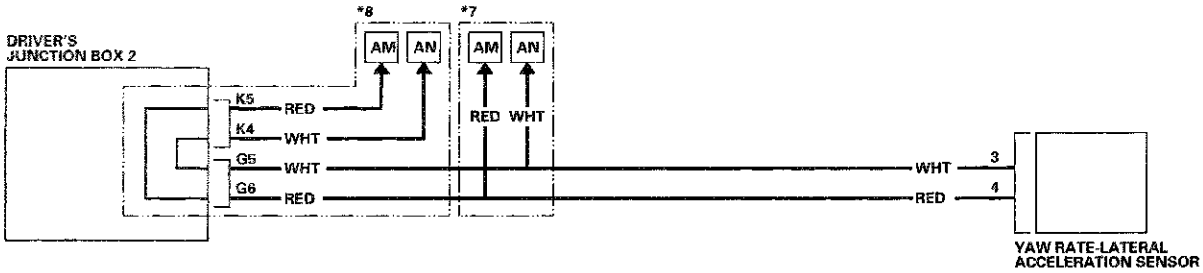

*5: With navigation system
*6: Without navigation system
*7: LX model
*8: All except LX model

How to Set Readiness Codes

Malfunction Indicator Lamp (MIL) Indication (In relation to Readiness Codes)

The vehicle has certain readiness codes that are part of the on-board diagnostics for the emissions systems. If the vehicle's battery has been disconnected or gone dead, if the DTCs have been cleared, or if the ECM/PCM has been reset, these readiness codes are reset to incomplete. In some states, part of the emissions testing is to make sure these codes are set to complete. If all of them are not set to complete, the vehicle may fail the emission test, or the test cannot be finished.

To check if the readiness codes are set to complete, turn the ignition switch to ON (II), but do not start the engine. The MIL will come on for 15—20 seconds. If it then goes off, the readiness codes are set to complete. If it flashes five times, one or more readiness codes are not set to complete. To set readiness codes from incomplete to complete, do the procedure for the appropriate code.

To check the status of a specific DTC system, check the OBD status in the DTC MENU with the HDS (see page 11-8). This screen displays the code, the current data list of the enable criteria, and the status of the readiness testing.

Catalytic Converter Monitor and Readiness Code

NOTE:
- Do not turn the ignition switch to LOCK (0) or ACC (I) during the procedure.
- All readiness codes are cleared when the battery is disconnected, if the DTCs have been cleared, or if the ECM/PCM is reset with the HDS.
- Low ambient temperatures or excessive stop-and-go traffic may increase the drive time needed to switch the readiness code from incomplete to complete.
- The readiness code will not switch to complete until all the enable criteria are met.
- If a fault in the secondary HO2S system caused the MIL to come on, the readiness code cannot be set to complete until you correct the fault.

Enable Criteria

- ECT SENSOR 1 at 158 °F (70 °C) or more.
- IAT SENSOR at 20 °F (−7 °C) or more.
- Vehicle speed (VSS) above 25 mph (40 km/h).

Procedure

1. Connect the HDS to the vehicle's data link connector (DLC), and bring up the READINESS CODEs screen for Catalyst in the DTCs MENU.

2. Start the engine.

3. Test-drive the vehicle under stop-and-go conditions with short periods of steady cruise. After about 5 miles (8 km), the readiness code should switch to complete.

4. If the readiness code is still not set to complete, check for a Temporary DTC with the HDS. If there is no DTC, one or more of the enable criteria were probably not met; repeat the procedure.

Evaporative Emission (EVAP) Control System Monitor and Readiness Code

NOTE: All readiness codes are cleared when the battery is disconnected, if the DTCs have been cleared, or if the ECM/PCM is reset with the HDS.

Enable Criteria

- Battery voltage is more than 10.5 V.
- Engine at idle.
- ECT SENSOR 1 and SENSOR 2 between 176 °F (80 °C) and 212 °F (100 °C).
- MAP sensor less than 46.6 kPa (14 in.Hg, 350 mmHg).
- Vehicle speed (VSS) 0 mph (0 km/h).
- IAT SENSOR 1 between 32 °F (0 °C) and 212 °F (100 °C).

Procedure

1. Connect the HDS to the DLC.
2. Start the engine.
3. Select EVAP TEST in the INSPECTION MENU with the HDS, then select the FUNCTION TEST in the EVAP TEST MENU.
   - If the result is normal, readiness is complete.
   - If the result is not normal, go to the next step.
4. Check for a Temporary DTC. If there is no DTC, one or more of the enable criteria were probably not met; repeat the procedure.

Air Fuel Ratio (A/F) Sensor Monitor and Readiness Code

NOTE:
- Do not turn the ignition switch to LOCK (0) or ACC (I) during the procedure.
- All readiness codes are cleared when the battery is disconnected, if the DTCs have been cleared, or if the ECM/PCM is reset with the HDS.

Enable Criteria

ECT SENSOR 1 at 140 °F (60 °C) or more.

Procedure

1. Start the engine.
2. Test-drive the vehicle under stop-and-go conditions with short periods of steady cruise. During the drive, decelerate (with the throttle fully closed) for 5 seconds. After about 3.5 miles (5.6 km), the readiness code should switch from incomplete to complete.
3. Check the readiness codes screen for the AIR FUEL RATIO (A/F) SENSOR in the DTCs MENU with the HDS.
   - If the screen shows complete, readiness is complete.
   - If the screen shows not complete, go to the next step.
4. Check for a Temporary DTC. If there is no DTC, the enable criteria was probably not met. Select the DATA LIST MENU. Check the ECT SENSOR 1 in the ALL DATA LIST with the HDS. If the ECT SENSOR 1 is less than 140 °F (60 °C), run the engine until it is more than 140 °F (60 °C), then repeat the procedure.

(cont'd)

How to Set Readiness Codes (cont'd)

Air Fuel Ratio (A/F) Sensor Heater Monitor Readiness Code

NOTE: All readiness codes are cleared when the battery is disconnected, if the DTCs have been cleared, or if the ECM/PCM is reset with the HDS.

Procedure

1. Start the engine, and let it idle for 1 minute. The readiness code should switch from incomplete to complete.

2. If the readiness code is still not set to complete, check for a Temporary DTC. If there is no DTC, repeat the procedure.

Misfire Monitor and Readiness Code

- This readiness code is always set to available because misfiring is continuously monitored.
- Monitoring pauses, and the misfire counter resets, if the vehicle is driven over a rough road.
- Monitoring also pauses, and the misfire counter holds at its current value, if the throttle position changes more than a predetermined value, or if driving conditions fall outside the range of any related enable criteria.

Fuel System Monitor and Readiness Code

- This readiness code is always set to available because the fuel system is continuously monitored during closed loop operation.
- Monitoring pauses when the catalytic converter, EVAP control system, and A/F sensor monitors are active.
- Monitoring also pauses when any related enable criteria are not being met. Monitoring resumes when the enable criteria is again being met.

Comprehensive Component Monitor and Readiness Code

This readiness code is always set to available because the comprehensive component monitor is continuously running whenever the engine is cranking or running.

Component Location Index

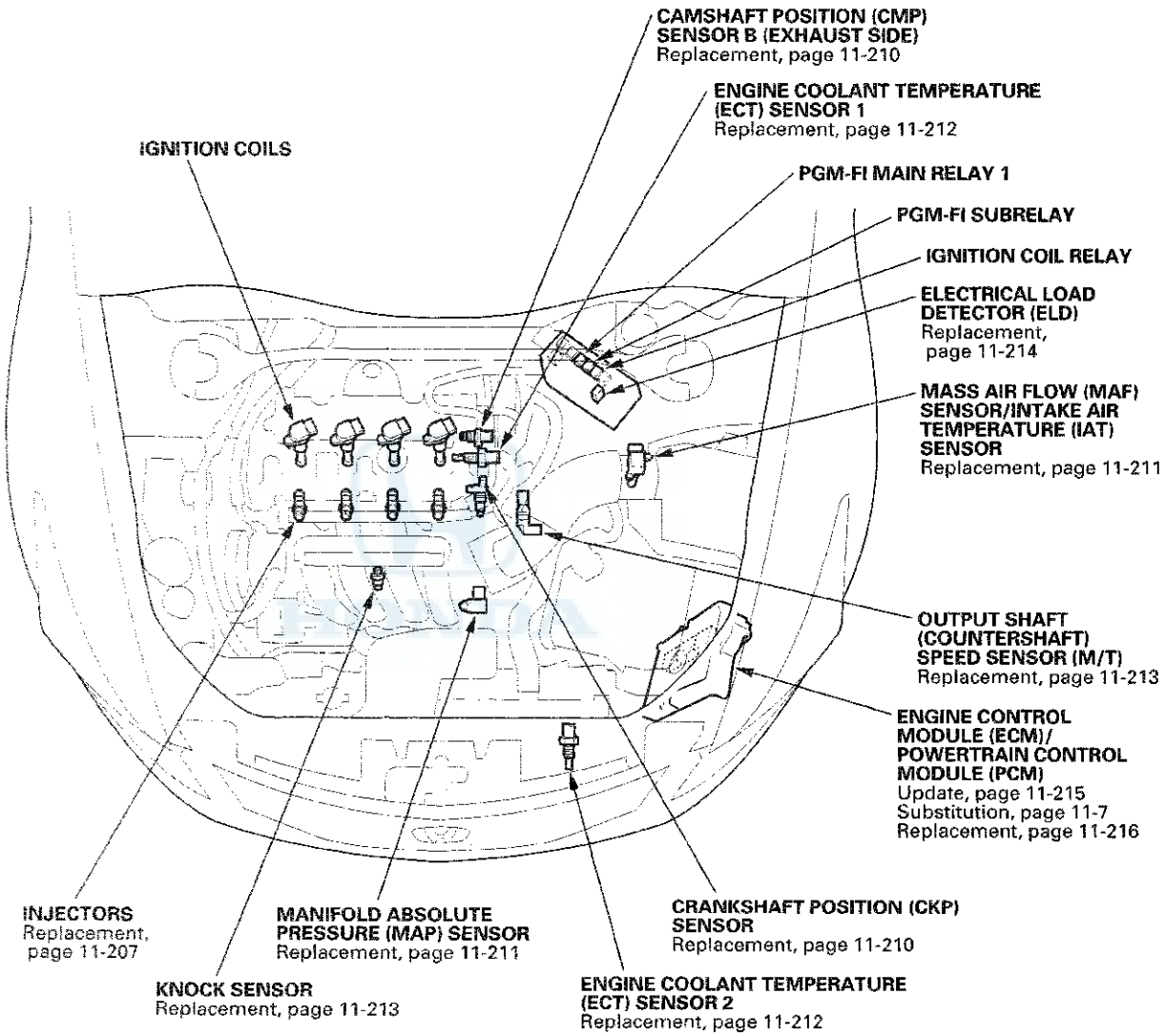

(cont'd)

Component Location Index (cont'd)

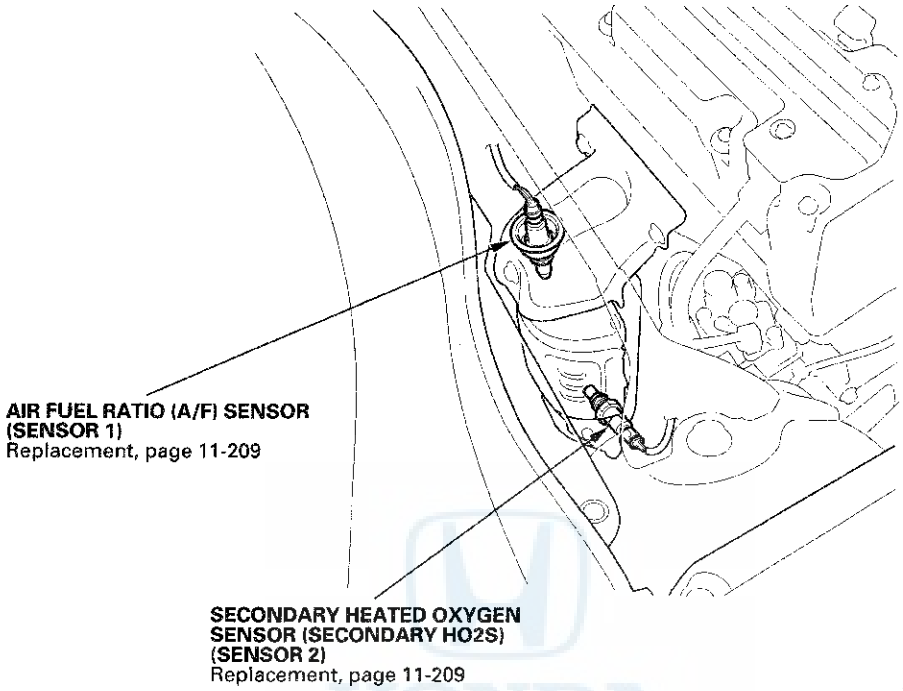

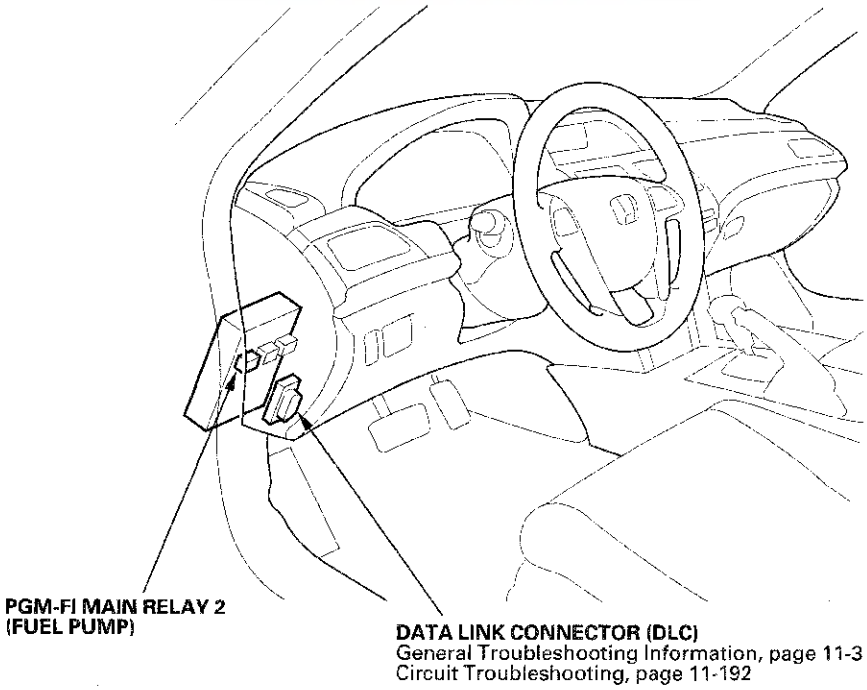

DTC Troubleshooting

DTC P0101: MAF Sensor Circuit Range/ Performance Problem

NOTE:
- Before you troubleshoot, record all freeze data and any on-board snapshot, and review the general troubleshooting information (see page 11-3).
- If DTC P1128, P1129, P2228, and/or P2229 are stored at the same time as DTC P0101, troubleshoot those DTCs first, then recheck for DTC P0101.

1. Check for poor connections or damage to these parts:

   - PCV hose
   - Intake air duct
   - Air cleaner
   - Purge (PCS) line
   - Brake booster
   - Brake booster hose

   Are the parts OK?

   YES—Go to step 2.

   NO—Repair or replace the damaged parts, then go to step 15.

2. Check for damage or looseness at the air duct in the air cleaner.

   Is it OK?

   YES—Go to step 3.

   NO—Reconnect or replace the air duct in the air cleaner, then go to step 15.

3. Check for a dirty air cleaner element.

   Is it dirty?

   YES—Replace the air cleaner element (see page 11-360), then go to step 15.

   NO—Go to step 4.

4. Turn the ignition switch to LOCK (0).

5. Turn the ignition switch to ON (II).

6. Check the MAF SENSOR in the DATA LIST with the HDS.

   Is there about 0.2 gm/s or 0.5 V?

   YES—Go to step 7.

   NO—Go to step 13.

7. Start the engine.

8. Vary the engine speed between 2,000 rpm and 3,000 rpm.

9. Check the MAF SENSOR in the DATA LIST with the HDS.

   Does the reading change?

   YES—Go to step 10.

   NO—Go to step 13.

10. Hold the engine speed at 3,000 rpm without load (A/T in P or N, M/T in neutral) until the radiator fan comes on, then let it idle.

11. Test-drive the vehicle for several minutes in the range of these recorded freeze data parameters:

    - ENGINE SPEED
    - VSS
    - MAP SENSOR
    - MAF SENSOR

12. Monitor the OBD STATUS for DTC P0101 in the DTCs MENU with the HDS.

    Does the screen indicate FAILED?

    YES—Go to step 13.

    NO—If the screen indicates PASSED, intermittent failure, the system is OK at this time. Check for poor connections or loose terminals at the MAF sensor/IAT sensor and the ECM/PCM. If the screen indicates NOT COMPLETED, go to step 11 and recheck.

(cont'd)

DTC Troubleshooting (cont'd)

13. Turn the ignition switch to LOCK (0).

14. Replace the MAF sensor/IAT sensor (see page 11-211).

15. Turn the ignition switch to ON (II).

16. Reset the ECM/PCM with the HDS.

17. Do the ECM/PCM idle learn procedure (see page 11-317).

18. Test-drive the vehicle for several minutes in the range of these recorded freeze data parameters:

    - ENGINE SPEED
    - VSS
    - MAP SENSOR
    - MAF SENSOR

19. Check for Temporary DTCs or DTCs with the HDS.

    Is DTC P0101 indicated?

    YES—Check for poor connections or loose terminals at the MAF sensor/IAT sensor and the ECM/PCM, then go to step 1.

    NO—Go to step 20.

20. Monitor the OBD STATUS for DTC P0101 in the DTCs MENU with the HDS.

    Does the screen indicate PASSED?

    YES—Troubleshooting is complete. If any other Temporary DTCs or DTCs were indicated in step 19, go to the indicated DTC's troubleshooting. ■

    NO—If the screen indicates FAILED, check for poor connections or loose terminals at the MAF sensor/IAT sensor and the ECM/PCM, then go to step 1. If the screen indicates NOT COMPLETED, go to step 18.

DTC P0102: MAF Sensor Circuit Low Voltage

NOTE: Before you troubleshoot, record all freeze data and any on-board snapshot, and review the general troubleshooting information (see page 11-3).

1. Turn the ignition switch to ON (II), and wait 2 seconds.

2. Check the MAF SENSOR in the DATA LIST with the HDS.

   Is about 0 gm/s, or 0.1 V or less indicated?

   YES—Go to step 3.

   NO—Intermittent failure, the system is OK at this time. Check for poor connections or loose terminals at the MAF sensor/IAT sensor and the ECM/PCM. ■

3. Turn the ignition switch to LOCK (0).

4. Disconnect the MAF sensor/IAT sensor 5P connector.

5. Turn the ignition switch to ON (II).

6. Measure the voltage between MAF sensor/IAT sensor 5P connector terminal No. 3 and body ground.

MAF SENSOR/IAT SENSOR 5P CONNECTOR

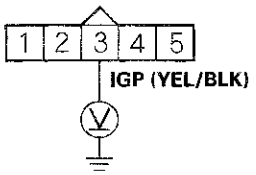

Wire side of female terminals

Is there battery voltage?

YES—Go to step 7.

NO—Repair open in the wire between PGM-FI main relay 1 and the MAF sensor/IAT sensor, then go to step 19.

7. Turn the ignition switch to LOCK (0).

8. Measure the resistance between MAF sensor/IAT sensor 5P connector terminal No. 1 and body ground.

MAF SENSOR/IAT SENSOR 5P CONNECTOR

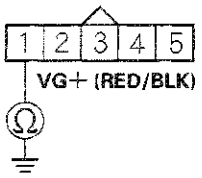

Wire side of female terminals

Is there 190–210 kΩ ?

YES—Go to step 13.

NO—Go to step 9.

9. Jump the SCS line with the HDS.

10. Disconnect ECM/PCM connector B (49P).

11. Check for continuity between ECM/PCM connector terminal B31 and body ground.

ECM/PCM CONNECTOR B (49P)

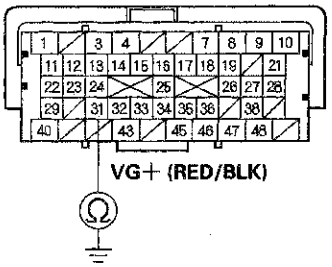

Terminal side of female terminals

Is there continuity?

YES—Repair short in the wire between the ECM/PCM (B31) and the MAF sensor/IAT sensor, then go to step 20.

NO—Go to step 12.

12. Check for continuity between MAF sensor/IAT sensor 5P connector terminal No. 1 and ECM/PCM connector terminal B31.

MAF SENSOR/IAT SENSOR 5P CONNECTOR

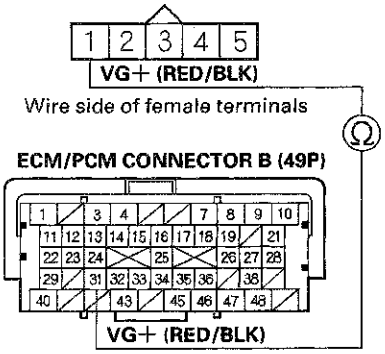

Terminal side of female terminals

Is there continuity?

YES—Go to step 25.

NO—Repair open in the wire between the ECM/PCM (B31) and the MAF sensor/IAT sensor, then go to step 20.

(cont'd)

DTC Troubleshooting (cont'd)

13. Substitute a known-good MAF sensor/IAT sensor (see page 11-211).

14. Reconnect all connectors.

15. Turn the ignition switch to ON (II).

16. Clear the DTC with the HDS.

17. Start the engine. Hold the engine speed at 2,000 rpm without load (A/T in P or N, M/T in neutral).

18. Check for Temporary DTCs or DTCs with the HDS.

    Is DTC P0102 indicated?

    YES—Reinstall the original MAF sensor/IAT sensor, then go to step 26.

    NO—Replace the original MAF sensor/IAT sensor (see page 11-211), then go to step 19.

19. Turn the ignition switch to LOCK (0).

20. Reconnect all connectors.

21. Turn the ignition switch to ON (II).

22. Reset the ECM/PCM with the HDS.

23. Do the ECM/PCM idle learn procedure (see page 11-317).

24. Check for Temporary DTCs or DTCs with the HDS.

    Is DTC P0102 indicated?

    YES—Check for poor connections or loose terminals at the MAF sensor/IAT sensor and the ECM/PCM, then go to step 1.

    NO—Troubleshooting is complete. If any other Temporary DTCs or DTCs are indicated, go to the indicated DTC's troubleshooting.■

25. Reconnect all connectors.

26. Update the ECM/PCM if it does not have the latest software (see page 11-215), or substitute a known-good ECM/PCM (see page 11-7).

27. Check for Temporary DTCs or DTCs with the HDS.

    Is DTC P0102 indicated?

    YES—Check for poor connections or loose terminals at the MAF sensor/IAT sensor and the ECM/PCM. If the ECM/PCM was updated, substitute a known-good ECM/PCM (see page 11-7), then recheck. If the ECM/PCM was substituted, go to step 1.

    NO—If the ECM/PCM was updated, troubleshooting is complete. If the ECM/PCM was substituted, replace the original ECM/PCM (see page 11-216). If any other Temporary DTCs or DTCs are indicated, go to the indicated DTC's troubleshooting.■

DTC P0103: MAF Sensor Circuit High Voltage

NOTE: Before you troubleshoot, record all freeze data and any on-board snapshot, and review the general troubleshooting information (see page 11-3).

1. Turn the ignition switch to ON (II), and wait 2 seconds.

2. Check the MAF SENSOR in the DATA LIST with the HDS.

   Is about 202 gm/s, or 4.89 V or more indicated?

   YES—Go to step 3.

   NO—Intermittent failure, the system is OK at this time. Check for poor connections or loose terminals at the MAF sensor/IAT sensor and the ECM/PCM. ■

3. Turn the ignition switch to LOCK (0).

4. Jump the SCS line with the HDS.

5. Disconnect the MAF sensor/IAT sensor 5P connector.

6. Disconnect ECM/PCM connector B (49P).

7. Check for continuity between MAF sensor/IAT sensor 5P connector terminal No. 2 and ECM/PCM connector terminal B33.

MAF SENSOR/IAT SENSOR 5P CONNECTOR

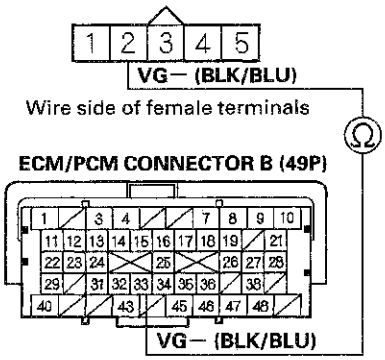

Is there continuity?

YES—Go to step 8.

NO—Repair open in the wire between the ECM/PCM (B33) and the MAF sensor/IAT sensor, then go to step 15.

(cont'd)

DTC Troubleshooting (cont'd)

8. Reconnect ECM/PCM connector B (49P).

9. Connect MAF sensor/IAT sensor 5P connector terminals No. 1 and No. 2 with a jumper wire.

MAF SENSOR/IAT SENSOR 5P CONNECTOR

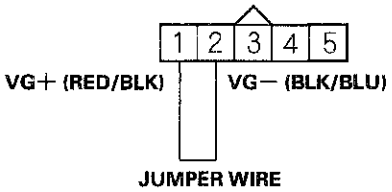

Wire side of female terminals

10. Turn the ignition switch to ON (II).

11. Clear the DTC with the HDS.

12. Check for Temporary DTCs or DTCs with the HDS.

    Is DTC P0103 indicated?

    YES—Go to step 20.

    NO—Go to step 13.

13. Turn the ignition switch to LOCK (0).

14. Replace the MAF sensor/IAT sensor (see page 11-211).

15. Reconnect all connectors.

16. Turn the ignition switch to ON (II).

17. Reset the ECM/PCM with the HDS.

18. Do the ECM/PCM idle learn procedure (see page 11-317).

19. Check for Temporary DTCs or DTCs with the HDS.

    Is DTC P0103 indicated?

    YES—Check for poor connections or loose terminals at the MAF sensor/IAT sensor and the ECM/PCM, then go to step 1.

    NO—Troubleshooting is complete. If any other Temporary DTCs or DTCs are indicated, go to the indicated DTC's troubleshooting. ■

20. Turn the ignition switch to LOCK (0).

21. Reconnect all connectors.

22. Update the ECM/PCM if it does not have the latest software (see page 11-215), or substitute a known-good ECM/PCM (see page 11-7).

23. Check for Temporary DTCs or DTCs with the HDS.

    Is DTC P0103 indicated?

    YES—Check for poor connections or loose terminals at the MAF sensor/IAT sensor and the ECM/PCM. If the ECM/PCM was updated, substitute a known-good ECM/PCM (see page 11-7), then recheck. If the ECM/PCM was substituted, go to step 1.

    NO—If the ECM/PCM was updated, troubleshooting is complete. If the ECM/PCM was substituted, replace the original ECM/PCM (see page 11-216). If any other Temporary DTCs or DTCs are indicated, go to the indicated DTC's troubleshooting. ■

DTC P0107: MAP Sensor Circuit Low Voltage

NOTE: Before you troubleshoot, record all freeze data and any on-board snapshot, and review the general troubleshooting information (see page 11-3).

1. Turn the ignition switch to ON (II).

2. Check the MAP SENSOR in the DATA LIST with the HDS.

   Is about 3 kPa (1.0 in.Hg, 26 mmHg), or 0.23 V or less indicated?

   YES—Go to step 3.

   NO—Intermittent failure, the system is OK at this time. Check for poor connections or loose terminals at the MAP sensor and the ECM/PCM. ■

3. Turn the ignition switch to LOCK (0).

4. Disconnect the MAP sensor 3P connector.

5. Turn the ignition switch to ON (II).

6. Check the MAP SENSOR in the DATA LIST with the HDS.

   Is about 3 kPa (1.0 in.Hg, 26 mmHg), or 0.23 V or less indicated?

   YES—Go to step 12.

   NO—Go to step 7.

7. Measure the voltage between MAP sensor 3P connector terminals No. 1 and No. 3.

MAP SENSOR 3P CONNECTOR

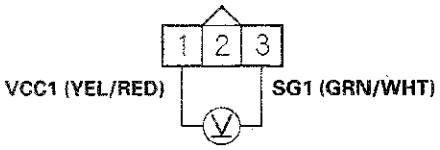

Wire side of female terminals

Is there about 5 V?

YES—Go to step 16.

NO—Go to step 8.

8. Turn the ignition switch to LOCK (0).

9. Jump the SCS line with the HDS.

10. Disconnect ECM/PCM connector C (49P).

11. Check for continuity between ECM/PCM connector terminal C13 and MAP sensor 3P connector terminal No. 1.

MAP SENSOR 3P CONNECTOR

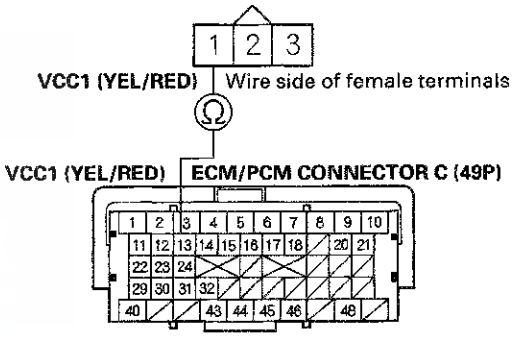

Terminal side of female terminals

Is there continuity?

YES—Go to step 23.

NO—Repair open in the wire between the ECM/PCM (C13) and the MAP sensor, then go to step 18.

(cont'd)

DTC Troubleshooting (cont'd)

12. Turn the ignition switch to LOCK (0).

13. Jump the SCS line with the HDS.

14. Disconnect ECM/PCM connector C (49P).

15. Check for continuity between MAP sensor 3P connector terminal No. 2 and body ground.

MAP SENSOR 3P CONNECTOR

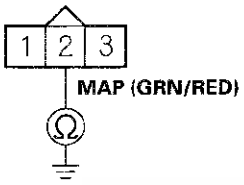

Wire side of female terminals

Is there continuity?

YES—Repair short in the wire between the ECM/PCM (C11) and the MAP sensor, then go to step 18.

NO—Go to step 23.

16. Turn the ignition switch to LOCK (0).

17. Replace the MAP sensor (see page 11-211).

18. Reconnect all connectors.

19. Turn the ignition switch to ON (II).

20. Reset the ECM/PCM with the HDS.

21. Do the ECM/PCM idle learn procedure (see page 11-317).

22. Check for Temporary DTCs or DTCs with the HDS.

Is DTC P0107 indicated?

YES—Check for poor connections or loose terminals at the MAP sensor and the ECM/PCM, then go to step 1.

NO—Troubleshooting is complete. If any other Temporary DTCs or DTCs are indicated, go to the indicated DTC's troubleshooting. ■

23. Reconnect all connectors.

24. Update the ECM/PCM if it does not have the latest software (see page 11-215), or substitute a known-good ECM/PCM (see page 11-7).

25. Check for Temporary DTCs or DTCs with the HDS.

Is DTC P0107 indicated?

YES—Check for poor connections or loose terminals at the MAP sensor and the ECM/PCM. If the ECM/PCM was updated, substitute a known-good ECM/PCM (see page 11-7), then recheck. If the ECM/PCM was substituted, go to step 1.

NO—If the ECM/PCM was updated, troubleshooting is complete. If the ECM/PCM was substituted, replace the original ECM/PCM (see page 11-216). If any other Temporary DTCs or DTCs are indicated, go to the indicated DTC's troubleshooting. ■

DTC P0108: MAP Sensor Circuit High Voltage

NOTE: Before you troubleshoot, record all freeze data and any on-board snapshot, and review the general troubleshooting information (see page 11-3).

1. Turn the ignition switch to ON (II).

2. Check the MAP SENSOR in the DATA LIST with the HDS.

   Is about 160 kPa (47.1 in.Hg, 1,197 mmHg), or 4.49 V or more indicated?

   YES—Go to step 3.

   NO—Intermittent failure, the system is OK at this time. Check for poor connections or loose terminals at the MAP sensor and the ECM/PCM. ■

3. Turn the ignition switch to LOCK (0).

4. Disconnect the MAP sensor 3P connector.

5. Connect MAP sensor 3P connector terminals No. 2 and No. 3 with a jumper wire.

MAP SENSOR 3P CONNECTOR

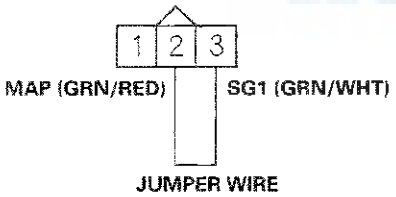

Wire side of female terminals

6. Turn the ignition switch to ON (II).

7. Check the MAP SENSOR in the DATA LIST with the HDS.

   Is about 160 kPa (47.1 in.Hg, 1,197 mmHg), or 4.49 V or more indicated?

   YES—Go to step 8.

   NO—Go to step 18.

8. Remove the jumper wire from the MAP sensor 3P connector.

9. Measure the voltage between MAP sensor 3P connector terminals No. 1 and No. 3.

MAP SENSOR 3P CONNECTOR

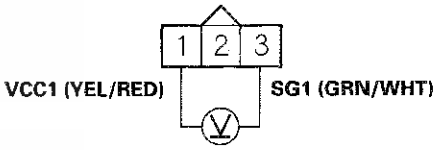

Wire side of female terminals

Is there about 5 V?

YES—Go to step 14.

NO—Go to step 10.

(cont'd)

DTC Troubleshooting (cont'd)

10. Turn the ignition switch to LOCK (0).

11. Jump the SCS line with the HDS.

12. Disconnect ECM/PCM connector C (49P).

13. Check for continuity between ECM/PCM connector terminal C14 and MAP sensor 3P connector terminal No. 3.

MAP SENSOR 3P CONNECTOR

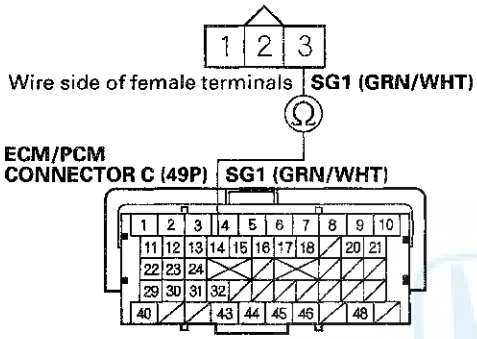

Is there continuity?

YES—Go to step 25.

NO—Repair open in the wire between the ECM/PCM (C14) and the MAP sensor, then go to step 20.

14. Turn the ignition switch to LOCK (0).

15. Jump the SCS line with the HDS.

16. Disconnect ECM/PCM connector C (49P).

17. Check for continuity between ECM/PCM connector terminal C11 and MAP sensor 3P connector terminal No. 2.

MAP SENSOR 3P CONNECTOR

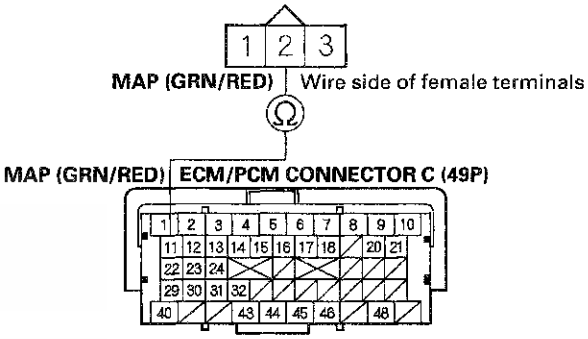

Is there continuity?

YES—Go to step 25.

NO—Repair open in the wire between the ECM/PCM (C11) and the MAP sensor, then go to step 20.

18. Turn the ignition switch to LOCK (0).

19. Replace the MAP sensor (see page 11-211).

20. Reconnect all connectors.

21. Turn the ignition switch to ON (II).

22. Reset the ECM/PCM with the HDS.

23. Do the ECM/PCM idle learn procedure (see page 11-317).

24. Check for Temporary DTCs or DTCs with the HDS.

    Is DTC P0108 indicated?

    YES—Check for poor connections or loose terminals at the MAP sensor and the ECM/PCM, then go to step 1.

    NO—Troubleshooting is complete. If any other Temporary DTCs or DTCs are indicated, go to the indicated DTC's troubleshooting. ■

25. Reconnect all connectors.

26. Update the ECM/PCM if it does not have the latest software (see page 11-215), or substitute a known-good ECM/PCM (see page 11-7).

27. Check for Temporary DTCs or DTCs with the HDS.

    Is DTC P0108 indicated?

    YES—Check for poor connections or loose terminals at the MAP sensor and the ECM/PCM. If the ECM/PCM was updated, substitute a known-good ECM/PCM (see page 11-7), then recheck. If the ECM/PCM was substituted, go to step 1.

    NO—If the ECM/PCM was updated, troubleshooting is complete. If the ECM/PCM was substituted, replace the original ECM/PCM (see page 11-216). If any other Temporary DTCs or DTCs are indicated, go to the indicated DTC's troubleshooting. ■

DTC P0111: IAT Sensor Circuit Range/ Performance Problem

NOTE: Before you troubleshoot, record all freeze data and any on-board snapshot, and review the general troubleshooting information (see page 11-3).

1. Check for poor connections or loose terminals at ECT sensors 1 and 2, and the IAT sensor.

   Are the connections and terminals OK?

   YES—Go to step 2.

   NO—Repair the connections or terminals, then go to step 15.

2. Remove the MAF sensor/IAT sensor (see page 11-211).

3. Allow IAT sensor to cool to ambient temperature.

4. Note the ambient temperature.

5. Connect the MAF sensor/IAT sensor to its 5P connector, but do not install the sensor onto the air cleaner.

6. Turn the ignition switch to ON (II).

7. Note the value of the IAT SENSOR quickly in the DATA LIST with the HDS.

8. Compare the value of the IAT SENSOR and the ambient temperature.

   Does the value of the IAT SENSOR differ 5.4 °F (3 °C) or more?

   YES—Go to step 13.

   NO—Go to step 9.

9. Disconnect the MAF sensor/IAT sensor from its 5P connector.

10. Using a heat gun, blow hot air on the MAF sensor/ IAT sensor for a few seconds. Do not apply the heat longer than a few seconds or you will damage the sensor.

(cont'd)

DTC Troubleshooting (cont'd)

11. Connect the MAF sensor/IAT sensor to the 5P connector, but do not install the sensor onto the air cleaner.

12. Check the IAT SENSOR in the DATA LIST with the HDS.

    Does the IAT SENSOR change 63 °F (35 °C) or more?

    YES—Intermittent failure, the system is OK at this time. Check for poor connections or loose terminals at the MAF sensor/IAT sensor and the ECM/PCM. ■

    NO—Go to step 13.

13. Turn the ignition switch to LOCK (0).

14. Replace the MAF sensor/IAT sensor (see page 11-211).

15. Turn the ignition switch to ON (II).

16. Reset the ECM/PCM with the HDS.

17. Do the ECM/PCM idle learn procedure (see page 11-317).

18. Check for Temporary DTCs or DTCs with the HDS.

    Is DTC P0111 indicated?

    YES—Check for poor connections or loose terminals at the MAF sensor/IAT sensor and the ECM/PCM, then go to step 1.

    NO—Troubleshooting is complete. If any other Temporary DTCs or DTCs are indicated, go to the indicated DTC's troubleshooting. ■

DTC P0112: IAT Sensor Circuit Low Voltage

NOTE: Before you troubleshoot, record all freeze data and any on-board snapshot, and review the general troubleshooting information (see page 11-3).

1. Turn the ignition switch to ON (II).

2. Check the IAT SENSOR in the DATA LIST with the HDS.

   Is about 356 °F (180 °C) or more, or 0.08 V or less indicated?

   YES—Go to step 3.

   NO—Intermittent failure, the system is OK at this time. Check for poor connections or loose terminals at the MAF sensor/IAT sensor and the ECM/PCM. ■

3. Turn the ignition switch to LOCK (0).

4. Disconnect the MAF sensor/IAT sensor 5P connector.

5. Turn the ignition switch to ON (II).

6. Check the IAT SENSOR in the DATA LIST with the HDS.

   Is about 356 °F (180 °C) or more, or 0.08 V or less indicated?

   YES—Go to step 7.

   NO—Go to step 11.

7. Turn the ignition switch to LOCK (0).

8. Jump the SCS line with the HDS.

9. Disconnect ECM/PCM connector B (49P).

10. Check for continuity between MAF sensor/IAT sensor 5P connector terminal No. 5 and body ground.

MAF SENSOR/IAT SENSOR 5P CONNECTOR

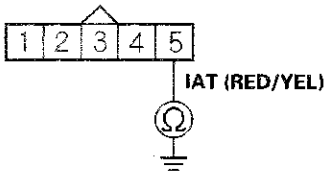

Wire side of female terminals

Is there continuity?

YES—Repair short in the wire between the MAF sensor/IAT sensor and the ECM/PCM (B32), then go to step 13.

NO—Go to step 18.

11. Turn the ignition switch to LOCK (0).

12. Replace the MAF sensor/IAT sensor (see page 11-211).

13. Reconnect all connectors.

14. Turn the ignition switch to ON (II).

15. Reset the ECM/PCM with the HDS.

16. Do the ECM/PCM idle learn procedure (see page 11-317).

17. Check for Temporary DTCs or DTCs with the HDS.

Is DTC P0112 indicated?

YES—Check for poor connections or loose terminals at the MAF sensor/IAT sensor and the ECM/PCM, then go to step 1.

NO—Troubleshooting is complete. If any other Temporary DTCs or DTCs are indicated, go to the indicated DTC's troubleshooting. ■

18. Reconnect all connectors.

19. Update the ECM/PCM if it does not have the latest software (see page 11-215), or substitute a known-good ECM/PCM (see page 11-7).

20. Check for Temporary DTCs or DTCs with the HDS.

Is DTC P0112 indicated?

YES—Check for poor connections or loose terminals at the MAF sensor/IAT sensor and the ECM/PCM. If the ECM/PCM was updated, substitute a known-good ECM/PCM (see page 11-7), then recheck. If the ECM/PCM was substituted, go to step 1.

NO—If the ECM/PCM was updated, troubleshooting is complete. If the ECM/PCM was substituted, replace the original ECM/PCM (see page 11-216). If any other Temporary DTCs or DTCs are indicated, go to the indicated DTC's troubleshooting. ■

DTC Troubleshooting (cont'd)

DTC P0113: IAT Sensor Circuit High Voltage

NOTE: Before you troubleshoot, record all freeze data and any on-board snapshot, and review the general troubleshooting information (see page 11-3).

1. Turn the ignition switch to ON (II).
2. Check the IAT SENSOR in the DATA LIST with the HDS.

   Is about −40 °F (−40 °C) or less, or 4.90 V or higher indicated?

   YES—Go to step 3.

   NO—Intermittent failure, the system is OK at this time. Check for poor connections or loose terminals at the MAF sensor/IAT sensor and the ECM/PCM. ■
3. Turn the ignition switch to LOCK (0).
4. Disconnect the MAF sensor/IAT sensor 5P connector.
5. Connect MAF sensor/IAT sensor 5P connector terminals No. 4 and No. 5 with a jumper wire.

MAF SENSOR/IAT SENSOR 5P CONNECTOR

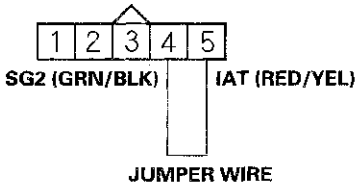

Wire side of female terminals

6. Turn the ignition switch to ON (II).
7. Check the IAT SENSOR in the DATA LIST with the HDS.

   Is about −40 °F (−40 °C) or less, or 4.90 V or higher indicated?

   YES—Go to step 8.

   NO—Go to step 20.
8. Turn the ignition switch to LOCK (0).
9. Remove the jumper wire from the MAF sensor/IAT sensor 5P connector.
10. Turn the ignition switch to ON (II).
11. Measure the voltage between MAF sensor/IAT sensor 5P connector terminal No. 5 and body ground.

MAF SENSOR/IAT SENSOR 5P CONNECTOR

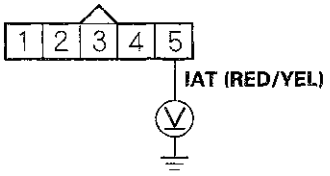

Wire side of female terminals

Is there about 5 V?

YES—Go to step 12.

NO—Go to step 16.

12. Turn the ignition switch to LOCK (0).

13. Jump the SCS line with the HDS.

14. Disconnect ECM/PCM connector B (49P).

15. Check for continuity between MAF sensor/IAT sensor 5P connector terminal No. 4 and ECM/PCM connector terminal B34.

MAF SENSOR/IAT SENSOR 5P CONNECTOR

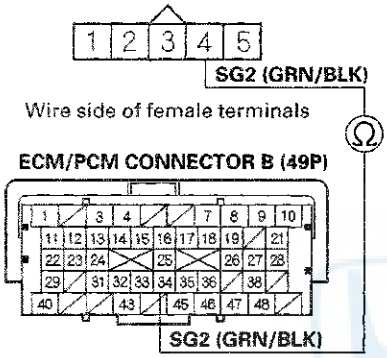

Terminal side of female terminals

Is there continuity?

YES—Go to step 27.

NO—Repair open in the wire between the ECM/PCM (B34) and the MAF sensor/IAT sensor, then go to step 22.

16. Turn the ignition switch to LOCK (0).

17. Jump the SCS line with the HDS.

18. Disconnect ECM/PCM connector B (49P).

19. Check for continuity between MAF sensor/IAT sensor 5P connector terminal No. 5 and ECM/PCM connector terminal B32.

MAF SENSOR/IAT SENSOR 5P CONNECTOR

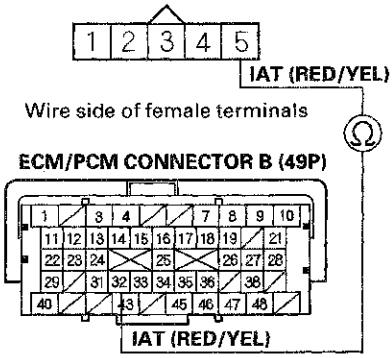

Terminal side of female terminals

Is there continuity?

YES—Go to step 27.

NO—Repair open in the wire between the ECM/PCM (B32) and the MAF sensor/IAT sensor, then go to step 22.

(cont'd)

DTC Troubleshooting (cont'd)

20. Turn the ignition switch to LOCK (0).

21. Replace the MAF sensor/IAT sensor (see page 11-211).

22. Reconnect all connectors.

23. Turn the ignition switch to ON (II).

24. Reset the ECM/PCM with the HDS.

25. Do the ECM/PCM idle learn procedure (see page 11-317).

26. Check for Temporary DTCs or DTCs with the HDS.

    Is DTC P0113 indicated?

    YES—Check for poor connections or loose terminals at the MAF sensor/IAT sensor and the ECM/PCM, then go to step 1.

    NO—Troubleshooting is complete. If any other Temporary DTCs or DTCs are indicated, go to the indicated DTC's troubleshooting.■

27. Reconnect all connectors.

28. Update the ECM/PCM if it does not have the latest software (see page 11-215), or substitute a known-good ECM/PCM (see page 11-7).

29. Check for Temporary DTCs or DTCs with the HDS.

    Is DTC P0113 indicated?

    YES—Check for poor connections or loose terminals at the MAF sensor/IAT sensor and the ECM/PCM. If the ECM/PCM was updated, substitute a known-good ECM/PCM (see page 11-7), then recheck. If the ECM/PCM was substituted, go to step 1.

    NO—If the ECM/PCM was updated, troubleshooting is complete. If the ECM/PCM was substituted, replace the original ECM/PCM (see page 11-216). If any other Temporary DTCs or DTCs are indicated, go to the indicated DTC's troubleshooting.■

DTC P0116: ECT Sensor 1 Circuit Range/ Performance Problem

NOTE: Before you troubleshoot, record all freeze data and any on-board snapshot, and review the general troubleshooting information (see page 11-3).

1. Turn the ignition switch to ON (II).

2. Check ECT SENSOR 1 in the DATA LIST with the HDS.

   Is about 176 °F (80 °C) or more, or 0.78 V or less indicated?

   YES—Go to step 6.

   NO—Go to step 3.

3. Note the value of ECT SENSOR 1 in the DATA LIST with the HDS.

4. Start the engine. Hold the engine speed at 3,000 rpm without load (A/T in P or N, M/T in neutral) until the radiator fan comes on, then let it idle.

5. Check ECT SENSOR 1 in the DATA LIST with the HDS.

   Does ECT SENSOR 1 change 18 °F (10 °C) or more?

   YES—Intermittent failure, the system is OK at this time. Check for poor connections or loose terminals at ECT sensor 1 and the ECM/PCM.■

   NO—Go to step 11.

6. Note the value of ECT SENSOR 1 in the DATA LIST with the HDS.

7. Turn the ignition switch to LOCK (0).

8. Open the hood, and let the engine cool for 3 hours.

9. Turn the ignition switch to ON (II).

10. Check ECT SENSOR 1 in the DATA LIST with the HDS.

    Does ECT SENSOR 1 change 18 °F (10 °C) or more?

    YES—Intermittent failure, the system is OK at this time. Check for poor connections or loose terminals at ECT sensor 1 and the ECM/PCM. ■

    NO—Go to step 11.

11. Turn the ignition switch to LOCK (0).

12. Replace ECT sensor 1 (see page 11-212).

13. Turn the ignition switch to ON (II).

14. Reset the ECM/PCM with the HDS.

15. Do the ECM/PCM idle learn procedure (see page 11-317).

16. Check for Temporary DTCs or DTCs with the HDS.

    Is DTC P0116 indicated?

    YES—Check for poor connections or loose terminals at ECT sensor 1 and the ECM/PCM, then go to step 1.

    NO—Troubleshooting is complete. If any other Temporary DTCs or DTCs are indicated, go to the indicated DTC's troubleshooting. ■

DTC P0117: ECT Sensor 1 Circuit Low Voltage

NOTE: Before you troubleshoot, record all freeze data and any on-board snapshot, and review the general troubleshooting information (see page 11-3).

1. Turn the ignition switch to ON (II).

2. Check ECT SENSOR 1 in the DATA LIST with the HDS.

   Is about 356 °F (180 °C) or more, or 0.08 V or less indicated?

   YES—Go to step 3.

   NO—Intermittent failure, the system is OK at this time. Check for poor connections or loose terminals at ECT sensor 1 and the ECM/PCM. ■

3. Turn the ignition switch to LOCK (0).

4. Disconnect the ECT sensor 1 2P connector.

5. Turn the ignition switch to ON (II).

6. Check ECT SENSOR 1 in the DATA LIST with the HDS.

   Is about 356 °F (180 °C) or more, or 0.08 V or less indicated?

   YES—Go to step 7.

   NO—Go to step 11.

7. Turn the ignition switch to LOCK (0).

8. Jump the SCS line with the HDS.

9. Disconnect ECM/PCM connector B (49P).

(cont'd)

DTC Troubleshooting (cont'd)

10. Check for continuity between ECT sensor 1 2P connector terminal No. 1 and body ground.

ECT SENSOR 1 2P CONNECTOR

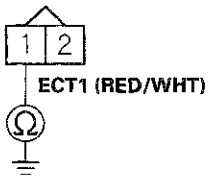

Wire side of female terminals

Is there continuity?

YES—Repair short in the wire between ECT sensor 1 and the ECM/PCM (B24), then go to step 13.

NO—Go to step 18.

11. Turn the ignition switch to LOCK (0).

12. Replace ECT sensor 1 (see page 11-212).

13. Reconnect all connectors.

14. Turn the ignition switch to ON (II).

15. Reset the ECM/PCM with the HDS.

16. Do the ECM/PCM idle learn procedure (see page 11-317).

17. Check for Temporary DTCs or DTCs with the HDS.

Is DTC P0117 indicated?

YES—Check for poor connections or loose terminals at ECT sensor 1 and the ECM/PCM, then go to step 1.

NO—Troubleshooting is complete. If any other Temporary DTCs or DTCs are indicated, go to the indicated DTC's troubleshooting. ■

18. Reconnect all connectors.

19. Update the ECM/PCM if it does not have the latest software (see page 11-215), or substitute a known-good ECM/PCM (see page 11-7).

20. Check for Temporary DTCs or DTCs with the HDS.

Is DTC P0117 indicated?

YES—Check for poor connections or loose terminals at ECT sensor 1 and the ECM/PCM. If the ECM/PCM was updated, substitute a known-good ECM/PCM (see page 11-7), then recheck. If the ECM/PCM was substituted, go to step 1.

NO—If the ECM/PCM was updated, troubleshooting is complete. If the ECM/PCM was substituted, replace the original ECM/PCM (see page 11-216). If any other Temporary DTCs or DTCs are indicated, go to the indicated DTC's troubleshooting. ■

DTC P0118: ECT Sensor 1 Circuit High Voltage

NOTE: Before you troubleshoot, record all freeze data and any on-board snapshot, and review the general troubleshooting information (see page 11-3).

1. Turn the ignition switch to ON (II).

2. Check ECT SENSOR 1 in the DATA LIST with the HDS.

   Is about −40 °F (−40 °C) or less, or 4.90 V or higher indicated?

   YES—Go to step 3.

   NO—Intermittent failure, the system is OK at this time. Check for poor connections or loose terminals at ECT sensor 1 and the ECM/PCM. ■

3. Turn the ignition switch to LOCK (0).

4. Disconnect the ECT sensor 1 2P connector.

5. Connect ECT sensor 1 2P connector terminals No. 1 and No. 2 with a jumper wire.

ECT SENSOR 1 2P CONNECTOR

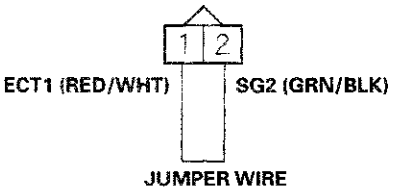

Wire side of female terminals

6. Turn the ignition switch to ON (II).

7. Check ECT SENSOR 1 in the DATA LIST with the HDS.

   Is about −40 °F (−40 °C) or less, or 4.90 V or higher indicated?

   YES—Go to step 8.

   NO—Go to step 20.

8. Turn the ignition switch to LOCK (0).

9. Remove the jumper wire from the ECT sensor 1 2P connector.

10. Turn the ignition switch to ON (II).

11. Measure the voltage between ECT sensor 1 2P connector terminal No. 1 and body ground.

ECT SENSOR 1 2P CONNECTOR

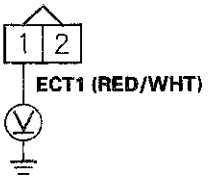

Wire side of female terminals

Is there about 5 V?

YES—Go to step 12.

NO—Go to step 16.

(cont'd)

DTC Troubleshooting (cont'd)

12. Turn the ignition switch to LOCK (0).
13. Jump the SCS line with the HDS.
14. Disconnect ECM/PCM connector B (49P).
15. Check for continuity between ECT sensor 1 2P connector terminal No. 2 and ECM/PCM connector terminal B34.

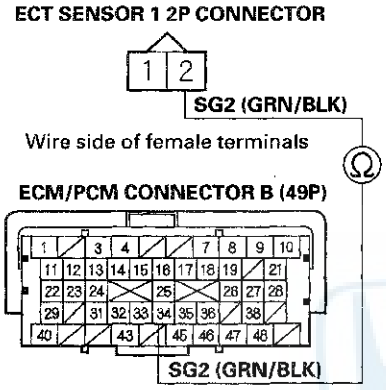

Is there continuity?

YES—Go to step 27.

NO—Repair open in the wire between the ECM/PCM (B34) and ECT sensor 1, then go to step 22.

16. Turn the ignition switch to LOCK (0).
17. Jump the SCS line with the HDS.
18. Disconnect ECM/PCM connector B (49P).
19. Check for continuity between ECT sensor 1 2P connector terminal No. 1 and ECM/PCM connector terminal B24.

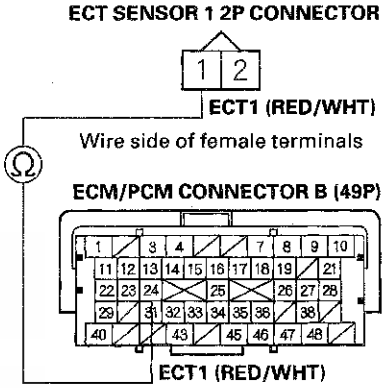

Is there continuity?

YES—Go to step 27.

NO—Repair open in the wire between the ECM/PCM (B24) and ECT sensor 1, then go to step 22.

20. Turn the ignition switch to LOCK (0).

21. Replace ECT sensor 1 (see page 11-212).

22. Reconnect all connectors.

23. Turn the ignition switch to ON (II).

24. Reset the ECM/PCM with the HDS.

25. Do the ECM/PCM idle learn procedure (see page 11-317).

26. Check for Temporary DTCs or DTCs with the HDS.

    Is DTC P0118 indicated?

    YES—Check for poor connections or loose terminals at ECT sensor 1 and the ECM/PCM, then go to step 1.

    NO—Troubleshooting is complete. If any other Temporary DTCs or DTCs are indicated, go to the indicated DTC's troubleshooting. ■

27. Reconnect all connectors.

28. Update the ECM/PCM if it does not have the latest software (see page 11-215), or substitute a known-good ECM/PCM (see page 11-7).

29. Check for Temporary DTCs or DTCs with the HDS.

    Is DTC P0118 indicated?

    YES—Check for poor connections or loose terminals at ECT sensor 1 and the ECM/PCM. If the ECM/PCM was updated, substitute a known-good ECM/PCM (see page 11-7), then recheck. If the ECM/PCM was substituted, go to step 1.

    NO—If the ECM/PCM was updated, troubleshooting is complete. If the ECM/PCM was substituted, replace the original ECM/PCM (see page 11-216). If any other Temporary DTCs or DTCs are indicated, go to the indicated DTC's troubleshooting. ■

DTC P0125: ECT Sensor 1 Malfunction/Slow Response

NOTE: Before you troubleshoot, record all freeze data and any on-board snapshot, and review the general troubleshooting information (see page 11-3).

1. Start the engine, and let it idle for 5 minutes or more.

2. Check ECT SENSOR 1 in the DATA LIST with the HDS.

   Is about 0 °F (−18 °C) or less indicated?

   YES—Check for poor connections or loose terminals at ECT sensor 1, ECT sensor 2, and the ECM/PCM. If the connections and terminal are OK, replace ECT sensor 1 (see page 11-212), then go to step 8.

   NO—Go to step 3.

3. Turn the ignition switch to LOCK (0).

4. Allow the engine to cool to 104 °F (40 °C) or less.

5. Make sure the temperature difference of ECT SENSOR 1 and ECT SENSOR 2 is about 50 °F (10 °C) in the DATA LIST with the HDS.

6. Start the engine, and let it idle until ECT SENSOR 1 goes up to about 158 °F (70 °C).

   Does ECT sensor 2 also show about 158 °F (70 °C)?

   YES—Go to step 7.

   NO—Intermittent failure, the system is OK at this time. Check for poor connections or loose terminals at ECT sensor 1, ECT sensor 2, and the ECM/PCM. ■

(cont'd)

DTC Troubleshooting (cont'd)

7. Check the thermostat (see page 10-4).

   Is the thermostat OK?

   YES—Check for poor connections or loose terminals at ECT sensor 1, ECT sensor 2, and the ECM/PCM. If the connections and terminal are OK, replace ECT sensor 1 (see page 11-212), then go to step 8.

   NO—Replace the thermostat (see page 10-8), then go to step 8.

8. Turn the ignition switch to LOCK (0).

9. Allow the engine to cool to 104 °F (40 °C) or less.

10. Make sure the temperature difference between ECT SENSOR 1 and ECT SENSOR 2 is about 50 °F (10 °C) in the DATA LIST with the HDS.

11. Start the engine, and let it idle until ECT SENSOR 1 goes up to about 158 °F (70 °C).

    Does ECT sensor 2 also show about 158 °F (70 °C)?

    YES—Go to step 1 and recheck.

    NO—Troubleshooting is complete.■

DTC P0128: Cooling System Malfunction

NOTE: Before you troubleshoot, record all freeze data and any on-board snapshot, and review the general troubleshooting information (see page 11-3).

1. Turn the ignition switch to ON (II).

2. Clear the DTC with the HDS.

3. Make sure the blower switch is OFF.

4. Check the FAN CTRL in the DATA LIST with the HDS.

   Is it OFF?

   YES—Go to step 5.

   NO—Wait until the FAN CTRL is off, then go to step 5.

5. Check the radiator fan operation.

   Does the radiator fan keep running?

   YES—Check the radiator fan circuit (see page 10-21), and the radiator fan relay (see page 22-91). If the circuits and the relay are OK, go to step 19.

   NO—Go to step 6.

6. Let the engine cool until the coolant temperature is 104 °F (40 °C) or less.

7. Note the value of ECT SENSOR 1 and ECT SENSOR 2 in the DATA LIST with the HDS.

8. Start the engine, and let it idle.

9. Let the engine idle until ECT SENSOR 1 goes up 41 °F (23 °C) or more from the recorded temperature.

10. Check ECT SENSOR 2 in the DATA LIST with the HDS.

11. Compare the recorded value of ECT SENSOR 2 and the present value of ECT SENSOR 2.

Did the temperature rise 14 °F (8 °C) or more?

YES—Intermittent failure, the system is OK at this time. Check for poor connections or loose terminals at ECT sensor 1, ECT sensor 2, and the ECM/PCM.■

NO—Test the thermostat (see page 10-4), then go to step 12.

12. Turn the ignition switch to ON (II).

13. Reset the ECM/PCM with the HDS.

14. Let the engine cool until the coolant temperature is between 21 °F (—6 °C) and 104 °F (40 °C).

15. Do the ECM/PCM idle learn procedure (see page 11-317).

16. Test-drive at a steady speed between 15—75 mph (24—120 km/h) for 10 minutes.

17. Check for Temporary DTCs or DTCs with the HDS.

Is DTC P0128 indicated?

YES—Check the cooling system, then go to step 19.

NO—Go to step 18.

18. Monitor the OBD STATUS for DTC P0128 in the DTCs MENU with the HDS.

Does the screen indicate PASSED?

YES—Troubleshooting is complete. If any other Temporary DTCs or DTCs were indicated in step 17, go to the indicated DTC's troubleshooting.■

NO—If the screen indicates FAILED, check the cooling system, then go to step 19. If the screen indicates NOT COMPLETED, go to step 14.

19. Update the ECM/PCM if it does not have the latest software (see page 11-215), or substitute a known-good ECM/PCM (see page 11-7).

20. Let the engine cool until the coolant temperature is between 21 °F (—6 °C) and 104 °F (40 °C).

21. Start the engine. Hold the engine speed at 3,000 rpm without load (A/T in P or N, M/T in neutral) until the radiator fan comes on, then let it idle.

22. Test-drive at a steady speed between 15—75 mph (24—120 km/h) for 10 minutes.

23. Check for Temporary DTCs or DTCs with the HDS.

Is DTC P0128 indicated?

YES—Check for poor connections or loose terminals at ECT sensor 1, ECT sensor 2, and the ECM/PCM. If the ECM/PCM was updated, substitute a known-good ECM/PCM (see page 11-7), then go to step 20. If the ECM/PCM was substituted, go to step 1.

NO—Go to step 24.

24. Monitor the OBD STATUS for DTC P0128 in the DTCs MENU with the HDS.

Does the screen indicate PASSED?

YES—If the ECM/PCM was updated, troubleshooting is complete. If the ECM/PCM was substituted, replace the original ECM/PCM (see page 11-216). If any other Temporary DTCs or DTCs were indicated in step 23, go to the indicated DTC's troubleshooting.■

NO—If the screen indicates FAILED, check for poor connections or loose terminals at ECT sensor 1, ECT sensor 2, and the ECM/PCM. If the ECM/PCM was updated, substitute a known-good ECM/PCM (see page 11-7), then go to step 20. If the ECM/PCM was substituted, go to step 1. If the screen indicates NOT COMPLETED, go to step 20.

DTC Troubleshooting (cont'd)

DTC P0133: A/F Sensor (Sensor 1) Malfunction/Slow Response

NOTE: Before you troubleshoot, record all freeze data and any on-board snapshot, and review the general troubleshooting information (see page 11-3).

1. Turn the ignition switch to ON (II).

2. Clear the DTC with the HDS.

3. Start the engine. Hold the engine speed at 3,000 rpm without load (A/T in P or N, M/T in neutral) until the radiator fan comes on, then let it idle.

4. Test-drive under these conditions:

   - Engine coolant temperature (ECT SENSOR 1) above 158 °F (70 °C)
   - A/T in D, M/T in 3rd or 4th
   - Drive the vehicle at 25 mph (40 km/h) or less for 5 minutes, then drive at a steady speed about 32 mph (52 km/h) or more

5. Monitor the OBD STATUS for DTC P0133 in the DTCs MENU with the HDS.

   Does the screen indicate FAILED?

   YES—Go to step 6.

   NO—If the screen indicates PASSED, intermittent failure, the system is OK at this time. Check for poor connections or loose terminals at the A/F sensor (Sensor 1) and the ECM/PCM. If the screen indicates EXECUTING, keep driving until a result comes on. If the screen indicates OUT OF CONDITION or NOT COMPLETED, go to step 3 and recheck.

6. Turn the ignition switch to LOCK (0).

7. Replace the A/F sensor (Sensor 1) (see page 11-209).

8. Turn the ignition switch to ON (II).

9. Reset the ECM/PCM with the HDS.

10. Do the ECM/PCM idle learn procedure (see page 11-317).

11. Start the engine. Hold the engine speed at 3,000 rpm without load (A/T in P or N, M/T in neutral) until the radiator fan comes on, then let it idle.

12. Test-drive under these conditions:

    - Engine coolant temperature (ECT SENSOR 1) above 158 °F (70 °C)
    - A/T in D, in 3rd or 4th
    - Drive the vehicle at 25 mph (40 km/h) or less for 5 minutes, then drive at a steady speed about 32 mph (52 km/h) or more

13. Check for Temporary DTCs or DTCs with the HDS.

    Is DTC P0133 indicated?

    YES—Check for poor connections or loose terminals at the A/F sensor (Sensor 1) and the ECM/PCM, then go to step 1.

    NO—Go to step 14.

14. Monitor the OBD STATUS for DTC P0133 in the DTCs MENU with the HDS.

    Does the screen indicate PASSED?

    YES—Troubleshooting is complete. If any other Temporary DTCs or DTCs were indicated in step 13, go to the indicated DTC's troubleshooting. ■

    NO—If the screen indicates FAILED, check for poor connections or loose terminals at the A/F sensor (Sensor 1) and the ECM/PCM, then go to step 1. If the screen indicates EXECUTING, keep driving until a result comes on. If the screen indicates OUT OF CONDITION or NOT COMPLETED, go to step 11.

DTC P0134: A/F Sensor (Sensor 1) Heater System Malfunction

NOTE:
- Before you troubleshoot, record all freeze data and any on-board snapshot, and review the general troubleshooting information (see page 11-3).
- If the vehicle was out of fuel and the engine stalled before this DTC was stored, refuel and clear the DTC with the HDS.
- If DTC P0135 is stored at the same time as DTC P0134, troubleshoot DTC P0135 first, then recheck for DTC P0134.

1. Turn the ignition switch to ON (II).

2. Clear the DTC with the HDS.

3. Start the engine, and let it idle without load (A/T in P or N, M/T in neutral) until the radiator fan comes on.

4. Check for Temporary DTCs or DTCs with the HDS.

   Is DTC P0134 indicated?

   YES—Go to step 5.

   NO—Intermittent failure, the system is OK at this time. Check for poor connections or loose terminals at the A/F sensor (Sensor 1), the PGM-FI subrelay, and the ECM/PCM.■

5. Turn the ignition switch to LOCK (0).

6. Replace the A/F sensor (Sensor 1) (see page 11-209).

7. Turn the ignition switch to ON (II).

8. Reset the ECM/PCM with the HDS.

9. Do the ECM/PCM idle learn procedure (see page 11-317).

10. Check for Temporary DTCs or DTCs with the HDS.

    Is DTC P0134 indicated?

    YES—Check for poor connections or loose terminals at the A/F sensor (Sensor 1), the PGM-FI subrelay, and the ECM/PCM, then go to step 1.

    NO—Go to step 11.

11. Monitor the OBD STATUS for DTC P0134 in the DTCs MENU with the HDS.

    Does the screen indicate PASSED?

    YES—Troubleshooting is complete. If any other Temporary DTCs or DTCs were indicated in step 10, go to the indicated DTC's troubleshooting.■

    NO—If the screen indicates FAILED, check for poor connections or loose terminals at the A/F sensor (Sensor 1), the PGM-FI subrelay, and the ECM/PCM, then go to step 1. If the screen indicates NOT COMPLETED, keep idling until a result comes on.

DTC Troubleshooting (cont'd)

DTC P0135: A/F Sensor (Sensor 1) Heater Circuit Malfunction

NOTE: Before you troubleshoot, record all freeze data and any on-board snapshot, and review the general troubleshooting information (see page 11-3).

1. Turn the ignition switch to ON (II).
2. Clear the DTC with the HDS.
3. Start the engine. Hold the engine speed at 3,000 rpm without load (A/T in P or N, M/T in neutral) until the radiator fan comes on, then let it idle.
4. Check for Temporary DTCs or DTCs with the HDS.

   Is DTC P0135 indicated?

   YES—Go to step 5.

   NO—Intermittent failure, the system is OK at this time. Check for poor connections or loose terminals at the A/F sensor (Sensor 1), the PGM-FI subrelay, and the ECM/PCM. ■
5. Turn the ignition switch to LOCK (0).
6. Check the No. 14 FI SUB (15 A) fuse in the under-hood fuse/relay box.

   Is the fuse OK?

   YES—Go to step 7.

   NO—Go to step 19.
7. Remove the PGM-FI subrelay (A) from the under-hood fuse/relay box.

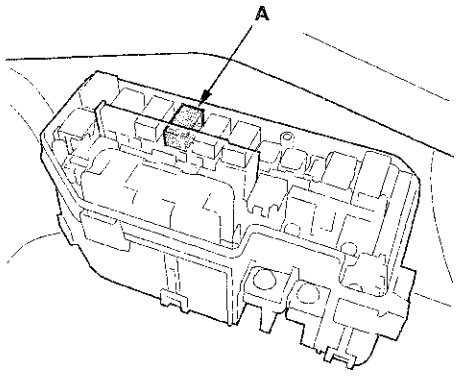

8. Test the PGM-FI subrelay (see page 22-91).

   Is the relay OK?

   YES—Go to step 9.

   NO—Replace the PGM-FI subrelay, then go to step 24.
9. Disconnect the A/F sensor (Sensor 1) 4P connector.
10. At the sensor side, measure the resistance between A/F sensor (Sensor 1) 4P connector terminals No. 3 and No. 4.

A/F SENSOR (SENSOR 1) 4P CONNECTOR

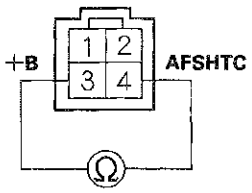

Terminal side of male terminals

Is there 2.0—2.7 Ω at room temperature?

YES—Go to step 11.

NO—Go to step 23.

11. At the sensor side, check for continuity between A/F sensor (Sensor 1) 4P connector terminals No. 2 and No. 3, and between terminals No. 2 and No. 4 individually.

A/F SENSOR (SENSOR 1) 4P CONNECTOR

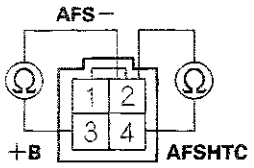

Terminal side of male terminals

Is there continuity?

YES—Go to step 23.

NO—Go to step 12.

12. Jump the SCS line with the HDS.

13. Disconnect ECM/PCM connector C (49P).

14. Check for continuity between ECM/PCM connector terminal C9 and body ground.

ECM/PCM CONNECTOR C (49P)

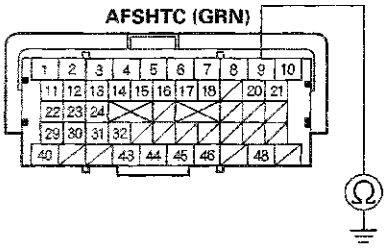

Terminal side of female terminals

Is there continuity?

YES—Repair short in the wire between the ECM/PCM (C9) and the A/F sensor (Sensor 1), then go to step 24.

NO—Go to step 15.

15. Check for continuity between A/F sensor (Sensor 1) 4P connector terminal No. 4 and ECM/PCM connector terminal C9.

A/F SENSOR (SENSOR 1) 4P CONNECTOR

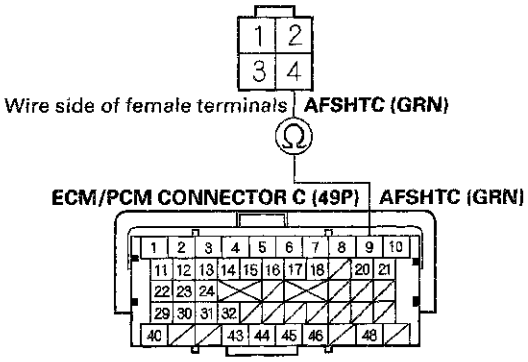

Terminal side of female terminals

Is there continuity?

YES—Go to step 16.

NO—Repair open in the wire between the ECM/PCM (C9) and the A/F sensor (Sensor 1), then go to step 24.

(cont'd)

DTC Troubleshooting (cont'd)

16. Check for continuity between A/F sensor (Sensor 1) 4P connector terminal No. 3 and PGM-FI subrelay 4P connector terminal No. 2.

A/F SENSOR (SENSOR 1) 4P CONNECTOR

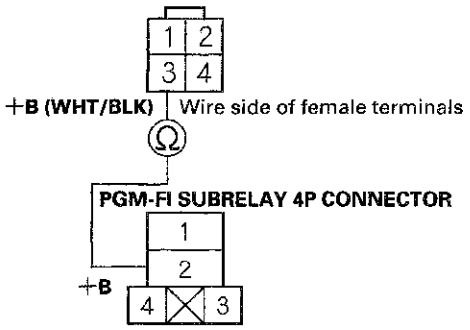

Terminal side of female terminals

Is there continuity?

YES—Go to step 17.

NO—Repair open in the wire between the A/F sensor (Sensor 1) and the PGM-FI subrelay, then go to step 24.

17. Disconnect ECM/PCM connector A (49P).

18. Check for continuity between PGM-FI subrelay 4P connector terminal No. 3 and ECM/PCM connector terminal A22.

PGM-FI SUBRELAY 4P CONNECTOR

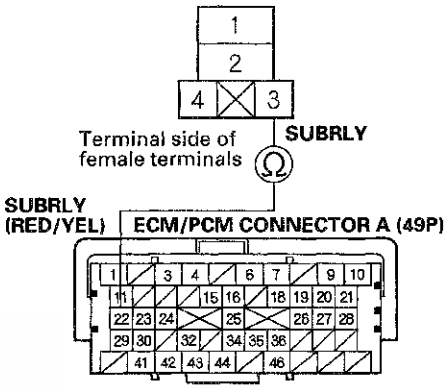

Terminal side of female terminals

Is there continuity?

YES—Go to step 30.

NO—Repair open in the wire between the ECM/PCM (A22) and the PGM-FI subrelay, then go to step 24.

19. Remove the PGM-FI subrelay (A) from the under-hood fuse/relay box.

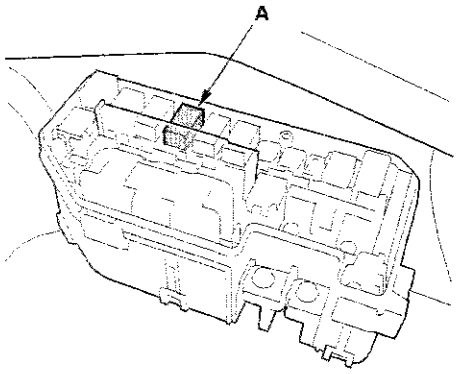

20. Disconnect the A/F sensor (Sensor 1) 4P connector.

21. Disconnect the EVAP canister vent shut valve 2P connector.

22. Check for continuity between A/F sensor (Sensor 1) 4P connector terminal No. 3 and body ground.

A/F SENSOR (SENSOR 1) 4P CONNECTOR

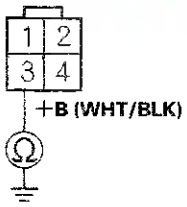

Wire side of female terminals

Is there continuity?

YES—Repair short in the wire between the PGM-FI subrelay, the A/F sensor (Sensor 1), and the EVAP canister vent shut valve. Also replace the No. 14 FI SUB (15 A) fuse, then go to step 24.

NO—Check the under-hood fuse/relay box, and replace it if needed (see page 22-83), then go to step 24.

23. Replace the A/F sensor (Sensor 1) (see page 11-209).

24. Reconnect all connectors.

25. Turn the ignition switch to ON (II).

26. Reset the ECM/PCM with the HDS.

27. Do the ECM/PCM idle learn procedure (see page 11-317).

28. Check for Temporary DTCs or DTCs with the HDS.

Is DTC P0135 indicated?

YES—Check for poor connections or loose terminals at the A/F sensor (Sensor 1), the PGM-FI subrelay, and the ECM/PCM, then go to step 1.

NO—Go to step 29.

29. Monitor the OBD STATUS for DTC P0135 in the DTCs MENU with the HDS.

Does the screen indicate PASSED?

YES—Troubleshooting is complete. If any other Temporary DTCs or DTCs were indicated in step 28, go to the indicated DTC's troubleshooting. ■

NO—If the screen indicates FAILED, check for poor connections or loose terminals at the A/F sensor (Sensor 1), the PGM-FI subrelay, and the ECM/PCM, then go to step 1. If the screen indicates NOT COMPLETED, keep idling until a result comes on.

(cont'd)

DTC Troubleshooting (cont'd)

30. Reconnect all connectors.

31. Update the ECM/PCM if it does not have the latest software (see page 11-215), or substitute a known-good ECM/PCM (see page 11-7).

32. Start the engine, and let it idle.

33. Check for Temporary DTCs or DTCs with the HDS.

    Is DTC P0135 indicated?

    YES—Check for poor connections or loose terminals at the A/F sensor (Sensor 1), the PGM-FI subrelay, and the ECM/PCM. If the ECM/PCM was updated, substitute a known-good ECM/PCM (see page 11-7), then go to step 32. If the ECM/PCM was substituted, go to step 1.

    NO—Go to step 34.

34. Monitor the OBD STATUS for DTC P0135 in the DTCs MENU with the HDS.

    Does the screen indicate PASSED?

    YES—If the ECM/PCM was updated, troubleshooting is complete. If the ECM/PCM was substituted, replace the original ECM/PCM (see page 11-216). If any other Temporary DTCs or DTCs were indicated in step 33, go to the indicated DTC's troubleshooting.■

    NO—If the screen indicates FAILED, check for poor connections or loose terminals at the A/F sensor (Sensor 1), the PGM-FI subrelay, and the ECM/PCM. If the ECM/PCM was updated, substitute a known-good ECM/PCM (see page 11-7), then go to step 32. If the ECM/PCM was substituted, go to step 1. If the screen indicates NOT COMPLETED, keep idling until a result comes on.

DTC P0137: Secondary HO2S (Sensor 2) Circuit Low Voltage

NOTE: Before you troubleshoot, record all freeze data and any on-board snapshot, and review the general troubleshooting information (see page 11-3).

1. Turn the ignition switch to ON (II).

2. Clear the DTC with the HDS.

3. Start the engine. Hold the engine speed at 3,000 rpm without load (A/T in P or N, M/T in neutral) until the radiator fan comes on, then let it idle.

4. Check the HO2S S2 in the DATA LIST with the HDS.

   Does the voltage stay at 0.05 V or less?

   YES—Go to step 5.

   NO—Intermittent failure, the system is OK at this time. Check for poor connections or loose terminals at the secondary HO2S (Sensor 2) and the ECM/PCM.■

5. Turn the ignition switch to LOCK (0).

6. Disconnect the secondary HO2S (Sensor 2) 4P connector.

7. Turn the ignition switch to ON (II).

8. Check the HO2S S2 in the DATA LIST with the HDS.

   Does the voltage stay at 0.05 V or less?

   YES—Go to step 9.

   NO—Go to step 13.

9. Turn the ignition switch to LOCK (0).

10. Jump the SCS line with the HDS.

11. Disconnect ECM/PCM connector B (49P).

12. Check for continuity between secondary HO2S (Sensor 2) 4P connector terminal No. 2 and body ground.

SECONDARY HO2S (SENSOR 2) 4P CONNECTOR

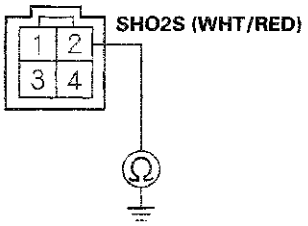

Terminal side of male terminals

Is there continuity?

YES—Repair short in the wire between the ECM/PCM (B36) and the secondary HO2S (Sensor 2), then go to step 15.

NO—Go to step 23.

13. Turn the ignition switch to LOCK (0).

14. Replace the secondary HO2S (Sensor 2) (see page 11-209).

15. Reconnect all connectors.

16. Turn the ignition switch to ON (II).

17. Reset the ECM/PCM with the HDS.

18. Do the ECM/PCM idle learn procedure (see page 11-317).

19. Start the engine, and let it idle without load (A/T in P or N, M/T in neutral) until the radiator fan comes on.

20. Test-drive under these conditions:

- Engine coolant temperature (ECT SENSOR 1) above 158 °F (70 °C)
- A/T in D, M/T in 4th
- Engine speed between 1,500—3,000 rpm
- Drive about 1 minute or more

21. Check for Temporary DTCs or DTCs with the HDS.

Is DTC P0137 indicated?

YES—Check for poor connections or loose terminals at the secondary HO2S (Sensor 2) and the ECM/PCM, then go to step 1.

NO—Go to step 22.

22. Monitor the OBD STATUS for DTC P0137 in the DTCs MENU with the HDS.

Does the screen indicate PASSED?

YES—Troubleshooting is complete. If any other Temporary DTCs or DTCs were indicated in step 21, go to the indicated DTC's troubleshooting.■

NO—If the screen indicates FAILED, check for poor connections or loose terminals at the secondary HO2S (Sensor 2) and the ECM/PCM, then go to step 1. If the screen indicates EXECUTING, keep driving until a result comes on. If the screen indicates OUT OF CONDITION or NOT COMPLETED, go to step 19.

23. Reconnect all connectors.

24. Update the ECM/PCM if it does not have the latest software (see page 11-215), or substitute a known-good ECM/PCM (see page 11-7).

25. Start the engine, and let it idle without load (A/T in P or N, M/T in neutral) until the radiator fan comes on.

26. Test-drive under these conditions:

- Engine coolant temperature (ECT SENSOR 1) above 158 °F (70 °C)
- A/T in D, M/T in 4th
- Engine speed between 1,500—3,000 rpm
- Drive 1 minute or more

(cont'd)

DTC Troubleshooting (cont'd)

27. Check for Temporary DTCs or DTCs with the HDS.

    Is DTC P0137 indicated?

    YES—Check for poor connections or loose terminals at the secondary HO2S (Sensor 2) and the ECM/PCM. If the ECM/PCM was updated, substitute a known-good ECM/PCM (see page 11-7), then go to step 25. If the ECM/PCM was substituted, go to step 1.

    NO—Go to step 28.

28. Monitor the OBD STATUS for DTC P0137 in the DTCs MENU with the HDS.

    Does the screen indicate PASSED?

    YES—If the ECM/PCM was updated, troubleshooting is complete. If the ECM/PCM was substituted, replace the original ECM/PCM (see page 11-216). If any other Temporary DTCs or DTCs were indicated in step 27, go to the indicated DTC's troubleshooting. ■

    NO—If the screen indicates FAILED, check for poor connections or loose terminals at the secondary HO2S (Sensor 2) and the ECM/PCM. If the ECM/PCM was updated, substitute a known-good ECM/PCM (see page 11-7), then go to step 25. If the ECM/PCM was substituted, go to step 1. If the screen indicates EXECUTING, keep driving until a result comes on. If the screen indicates OUT OF CONDITION or NOT COMPLETED, go to step 25.

DTC P0138: Secondary HO2S (Sensor 2) Circuit High Voltage

NOTE: Before you troubleshoot, record all freeze data and any on-board snapshot, and review the general troubleshooting information (see page 11-3).

1. Turn the ignition switch to ON (II).
2. Clear the DTC with the HDS.
3. Start the engine. Hold the engine speed at 3,000 rpm without load (A/T in P or N, M/T in neutral) until the radiator fan comes on, then let it idle.
4. Check the HO2S S2 in the DATA LIST with the HDS.

   Does the voltage stay at 1.27 V or more?

   YES—Go to step 5.

   NO—Intermittent failure, the system is OK at this time. Check for poor connections or loose terminals at the secondary HO2S (Sensor 2) and the ECM/PCM. ■

5. Turn the ignition switch to LOCK (0).
6. Disconnect the secondary HO2S (Sensor 2) 4P connector.
7. Connect secondary HO2S (Sensor 2) 4P connector terminals No. 1 and No. 2 with a jumper wire.

SECONDARY HO2S (SENSOR 2) 4P CONNECTOR

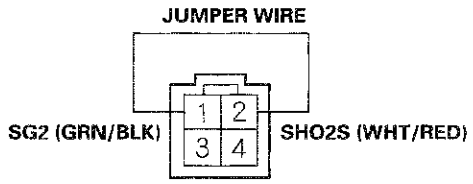

Terminal side of male terminals

8. Turn the ignition switch to ON (II).

9. Check the HO2S S2 in the DATA LIST with the HDS.

   Does the voltage stay at 1.27 V or more?

   YES—Go to step 10.

   NO—Go to step 19.

10. Turn the ignition switch to LOCK (0).

11. Remove the jumper wire from the secondary HO2S (Sensor 2) 4P connector.

12. Connect secondary HO2S (Sensor 2) 4P connector terminal No. 2 to body ground with a jumper wire.

SECONDARY HO2S (SENSOR 2) 4P CONNECTOR

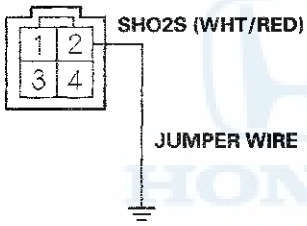

Terminal side of male terminals

13. Turn the ignition switch to ON (II).

14. Check the HO2S S2 in the DATA LIST with the HDS.

    Does the voltage stay at 1.27 V or more?

    YES—Go to step 15.

    NO—Repair open in the wire between the ECM/PCM (B34) and the secondary HO2S (Sensor 2), then go to step 21.

15. Turn the ignition switch to LOCK (0).

16. Jump the SCS line with the HDS.

17. Disconnect ECM/PCM connector B (49P).

18. Check for continuity between ECM/PCM connector terminal B36 and body ground.

ECM/PCM CONNECTOR B (49P)

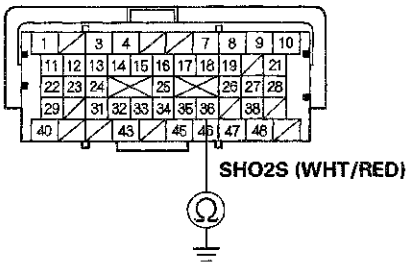

Terminal side of female terminals

Is there continuity?

YES—Go to step 29.

NO—Repair open in the wire between the ECM/PCM (B36) and the secondary HO2S (Sensor 2), then go to step 21.

19. Turn the ignition switch to LOCK (0).

20. Replace the secondary HO2S (Sensor 2) (see page 11-209).

21. Reconnect all connectors.

22. Turn the ignition switch to ON (II).

23. Reset the ECM/PCM with the HDS.

24. Do the ECM/PCM idle learn procedure (see page 11-317).

(cont'd)

DTC Troubleshooting (cont'd)

25. Start the engine, and let it idle without load (A/T in P or N, M/T in neutral) until the radiator fan comes on.

26. Test-drive under these conditions:

    - Engine coolant temperature (ECT SENSOR 1) above 158 °F (70 °C)
    - A/T in D, M/T in 4th
    - Engine speed between 1,500—3,000 rpm
    - Drive about 1 minute or more

27. Check for Temporary DTCs or DTCs with the HDS.

    Is DTC P0138 indicated?

    YES—Check for poor connections or loose terminals at the secondary HO2S (Sensor 2) and the ECM/PCM, then go to step 1.

    NO—Go to step 28.

28. Monitor the OBD STATUS for DTC P0138 in the DTCs MENU with the HDS.

    Does the screen indicate PASSED?

    YES—Troubleshooting is complete. If any other Temporary DTCs or DTCs were indicated in step 27, go to the indicated DTC's troubleshooting. ■

    NO—If the screen indicates FAILED, check for poor connections or loose terminals at the secondary HO2S (Sensor 2) and the ECM/PCM, then go to step 1. If the screen indicates EXECUTING, keep driving until a result comes on. If the screen indicates OUT OF CONDITION or NOT COMPLETED, go to step 25.

29. Reconnect all connectors.

30. Update the ECM/PCM if it does not have the latest software (see page 11-215), or substitute a known-good ECM/PCM (see page 11-7).

31. Start the engine, and let it idle without load (A/T in P or N, M/T in neutral) until the radiator fan comes on.

32. Test-drive under these conditions:

    - Engine coolant temperature (ECT SENSOR 1) above 158 °F (70 °C)
    - A/T in D, M/T in 4th
    - Engine speed between 1,500—3,000 rpm
    - Drive about 1 minute or more

33. Check for Temporary DTCs or DTCs with the HDS.

    Is DTC P0138 indicated?

    YES—Check for poor connections or loose terminals at the secondary HO2S (Sensor 2) and the ECM/PCM. If the ECM/PCM was updated, substitute a known-good ECM/PCM (see page 11-7), then go to step 31. If the ECM/PCM was substituted, go to step 1.

    NO—Go to step 34.

34. Monitor the OBD STATUS for DTC P0138 in the DTCs MENU with the HDS.

    Does the screen indicate PASSED?

    YES—If the ECM/PCM was updated, troubleshooting is complete. If the ECM/PCM was substituted, replace the original ECM/PCM (see page 11-216). If any other Temporary DTCs or DTCs were indicated in step 33, go to the indicated DTC's troubleshooting. ■

    NO—If the screen indicates FAILED, check for poor connections or loose terminals at the secondary HO2S (Sensor 2) and the ECM/PCM. If the ECM/PCM was updated, substitute a known-good ECM/PCM (see page 11-7), then go to step 31. If the ECM/PCM was substituted, go to step 1. If the screen indicates EXECUTING, keep driving until a result comes on. If the screen indicates OUT OF CONDITION or NOT COMPLETED, go to step 31.

DTC P0139: Secondary HO2S (Sensor 2) Slow Response

NOTE: Before you troubleshoot, record all freeze data and any on-board snapshot, and review the general troubleshooting information (see page 11-3).

1. Turn the ignition switch to ON (II).

2. Clear the DTC with the HDS.

3. Start the engine. Hold the engine speed at 3,000 rpm without load (A/T in P or N, M/T in neutral) until the radiator fan comes on, then let it idle.

4. Test-drive under these conditions:

   - Engine coolant temperature (ECT SENSOR 1) above 158 °F (70 °C)
   - A/T in D, M/T in 4th
   - Drive at a steady speed between 55—75 mph (88—120 km/h) for 1 minute, then decelerate (with throttle fully closed) for 10 seconds

5. Monitor the OBD STATUS for DTC P0139 in the DTCs MENU with the HDS.

   Does the screen indicate FAILED?

   YES—Go to step 6.

   NO—If the screen indicates PASSED, intermittent failure, the system is OK at this time. Check for poor connections or loose terminals at the secondary HO2S (Sensor 2) and the ECM/PCM. If the screen indicates EXECUTING, keep driving until a result comes on. If the screen indicates OUT OF CONDITION or NOT COMPLETED, go to step 3 and recheck.

6. Turn the ignition switch to LOCK (0).

7. Replace the secondary HO2S (Sensor 2) (see page 11-209).

8. Turn the ignition switch to ON (II).

9. Reset the ECM/PCM with the HDS.

10. Do the ECM/PCM idle learn procedure (see page 11-317).

11. Start the engine, and let it idle without load (A/T in P or N, M/T in neutral) until the radiator fan comes on.

12. Test-drive under these conditions:

    - Engine coolant temperature (ECT SENSOR 1) above 158 °F (70 °C)
    - A/T in D, M/T in 4th
    - Drive at a steady speed between 55—75 mph (88—120 km/h) for 1 minute, then decelerate (with throttle fully closed) for 10 seconds

13. Check for Temporary DTCs or DTCs with the HDS.

    Is DTC P0139 indicated?

    YES—Check for poor connections or loose terminals at the secondary HO2S (Sensor 2) and the ECM/PCM, then go to step 1.

    NO—Go to step 14.

14. Monitor the OBD STATUS for DTC P0139 in the DTCs MENU with the HDS.

    Does the screen indicate PASSED?

    YES—Troubleshooting is complete. If any other Temporary DTCs or DTCs were indicated in step 13, go to the indicated DTC's troubleshooting.■

    NO—If the screen indicates FAILED, check for poor connections or loose terminals at the secondary HO2S (Sensor 2) and the ECM/PCM, then go to step 1. If the screen indicates EXECUTING, keep driving until a result comes on. If the screen indicates OUT OF CONDITION or NOT COMPLETED, go to step 11.

DTC Troubleshooting (cont'd)

DTC P0141: Secondary HO2S (Sensor 2) Heater Circuit Malfunction

NOTE: Before you troubleshoot, record all freeze data and any on-board snapshot, and review the general troubleshooting information (see page 11-3).

1. Turn the ignition switch to ON (II).
2. Clear the DTC with the HDS.
3. Start the engine.
4. Check for Temporary DTCs or DTCs with the HDS.

   Is DTC P0141 indicated?

   YES—Go to step 5.

   NO—Intermittent failure, the system is OK at this time. Check for poor connections or loose terminals at the secondary HO2S (Sensor 2) and the ECM/PCM. ■

5. Turn the ignition switch to LOCK (0).
6. Check the No. 7 ACG (15 A) fuse in the under-dash fuse/relay box.

   Is the fuse OK?

   YES—Go to step 7.

   NO—Repair short in the wire between the secondary HO2S (Sensor 2) and the No. 7 ACG (15 A) fuse. Also replace the No. 7 ACG (15 A) fuse, then go to step 23.

7. Disconnect the secondary HO2S (Sensor 2) 4P connector.
8. At the secondary HO2S (Sensor 2) side, measure the resistance between secondary HO2S (Sensor 2) 4P connector terminals No. 3 and No. 4.

SECONDARY HO2S (SENSOR 2) 4P CONNECTOR

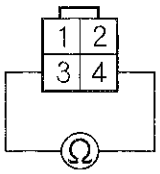

Wire side of female terminals

Is there 5.4—7.3 Ω at room temperature?

YES—Go to step 9.

NO—Go to step 22.

9. At the secondary HO2S (Sensor 2) side, check for continuity between body ground and secondary HO2S (Sensor 2) 4P connector terminals No. 3 and No. 4 individually.

SECONDARY HO2S (SENSOR 2) 4P CONNECTOR

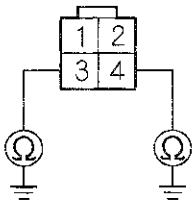

Wire side of female terminals

Is there continuity?

YES—Go to step 22.

NO—Go to step 10.

10. Turn the ignition switch to ON (II).

11. Measure the voltage between secondary HO2S (Sensor 2) 4P connector terminals No. 3 and No. 4.

SECONDARY HO2S (SENSOR 2) 4P CONNECTOR

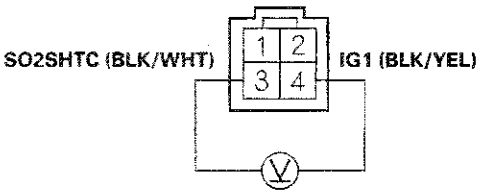

Terminal side of male terminals

Is there battery voltage?

YES—Go to step 12.

NO—Go to step 16.

12. Turn the ignition switch to LOCK (0).

13. Jump the SCS line with the HDS.

14. Disconnect ECM/PCM connector B (49P).

15. Check for continuity between ECM/PCM connector terminal B4 and body ground.

ECM/PCM CONNECTOR B (49P)

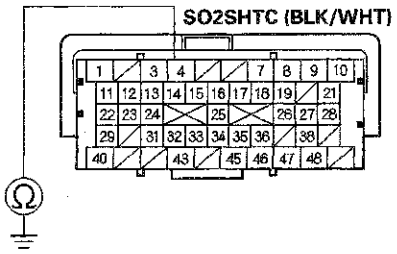

Terminal side of female terminals

Is there continuity?

YES—Repair short in the wire between the ECM/PCM (B4) and the secondary HO2S (Sensor 2), then go to step 23.

NO—Go to step 29.

16. Measure the voltage between secondary HO2S (Sensor 2) 4P connector terminal No. 4 and body ground.

SECONDARY HO2S (SENSOR 2) 4P CONNECTOR

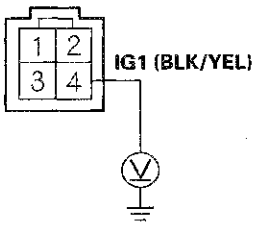

Terminal side of male terminals

Is there battery voltage?

YES—Go to step 17.

NO—Repair open in the wire between the secondary HO2S (Sensor 2) and the No. 7 ACG (15 A) fuse, then go to step 23.

(cont'd)

DTC Troubleshooting (cont'd)

17. Turn the ignition switch to LOCK (0).

18. Jump the SCS line with the HDS.

19. Disconnect ECM/PCM connector B (49P).

20. Connect secondary HO2S (Sensor 2) 4P connector terminal No. 3 to body ground with a jumper wire.

SECONDARY HO2S (SENSOR 2) 4P CONNECTOR

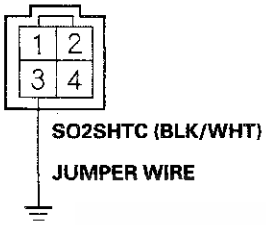

Terminal side of male terminals

21. Check for continuity between ECM/PCM connector terminal B4 and body ground.

ECM/PCM CONNECTOR B (49P)

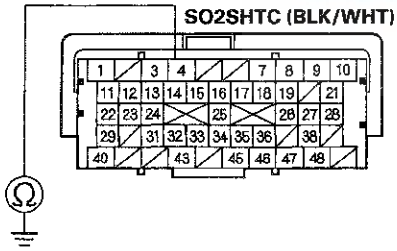

Terminal side of female terminals

Is there continuity?

YES—Go to step 29.

NO—Repair open in the wire between the ECM/PCM (B4) and the secondary HO2S (Sensor 2), then go to step 23.

22. Replace the secondary HO2S (Sensor 2) (see page 11-209).

23. Reconnect all connectors.

24. Turn the ignition switch to ON (II).

25. Reset the ECM/PCM with the HDS.

26. Do the ECM/PCM idle learn procedure (see page 11-317).

27. Check for Temporary DTCs or DTCs with the HDS.

Is DTC P0141 indicated?

YES—Check for poor connections or loose terminals at the secondary HO2S (Sensor 2) and the ECM/PCM, then go to step 1.

NO—Go to step 28.

28. Monitor the OBD STATUS for DTC P0141 in the DTCs MENU with the HDS.

Does the screen indicate PASSED?

YES—Troubleshooting is complete. If any other Temporary DTCs or DTCs were indicated in step 27, go to the indicated DTC's troubleshooting. ■

NO—If the screen indicates FAILED, check for poor connections or loose terminals at the secondary HO2S (Sensor 2) and the ECM/PCM, then go to step 1. If the screen indicates NOT COMPLETED, keep idling until a result comes on.

29. Reconnect all connectors.

30. Update the ECM/PCM if it does not have the latest software (see page 11-215), or substitute a known-good ECM/PCM (see page 11-7).

31. Start the engine, and let it idle.

32. Check for Temporary DTCs or DTCs with the HDS.

    Is DTC P0141 indicated?

    YES—Check for poor connections or loose terminals at the secondary HO2S (Sensor 2) and the ECM/PCM. If the ECM/PCM was updated, substitute a known-good ECM/PCM (see page 11-7), then go to step 31. If the ECM/PCM was substituted, go to step 1.

    NO—Go to step 33.

33. Monitor the OBD STATUS for DTC P0141 in the DTCs MENU with the HDS.

    Does the screen indicate PASSED?

    YES—If the ECM/PCM was updated, troubleshooting is complete. If the ECM/PCM was substituted, replace the original ECM/PCM (see page 11-216). If any other Temporary DTCs or DTCs were indicated in step 32, go to the indicated DTC's troubleshooting. ■

    NO—If the screen indicates FAILED, check for poor connections or loose terminals at the secondary HO2S (Sensor 2) and the ECM/PCM. If the ECM/PCM was updated, substitute a known-good ECM/PCM (see page 11-7), then go to step 31. If the ECM/PCM was substituted, go to step 1. If the screen indicates NOT COMPLETED, keep idling until a result comes on.

DTC P0171: Fuel System Too Lean

DTC P0172: Fuel System Too Rich

NOTE:
- Before you troubleshoot, record all freeze data and any on-board snapshot, and review the general troubleshooting information (see page 11-3).
- If any of the DTCs listed below are indicated at the same time as DTC P0171 and/or P0172, troubleshoot those DTCs first, then recheck for P0171 and/or P0172.

P0101, P0102, P0103: Mass air flow (MAF) sensor
P0107, P0108, P1128, P1129: Manifold absolute pressure (MAP) sensor
P0133, P1172, P1157, P2195, P2238, P2252, P2A00: Air fuel ratio (A/F) sensor (Sensor 1)
P0134, P0135: Air fuel ratio (A/F) sensor (Sensor 1) heater
P0137, P0138, P0139: Secondary HO2S (Sensor 2)
P0141: Secondary HO2S (Sensor 2) heater
P2646, P2647, P2648, P2649: VTEC system
P0443, P0496: EVAP canister purge valve

1. Check the fuel pressure (see page 11-335).

   Is the fuel pressure OK?

   YES—Go to step 2.

   NO—
   - If the pressure is too high, replace the fuel pressure regulator (see page 11-350), then go to step 7.
   - If the pressure is too low, check the fuel pump, the fuel feed pipe and the fuel filter. If they are OK, replace the fuel pressure regulator (see page 11-350), then go to step 7.

(cont'd)

DTC Troubleshooting (cont'd)

2. Check for vacuum leaks at these parts:

   - PCV valve
   - PCV hose
   - EVAP canister purge valve
   - Throttle body
   - Intake manifold
   - Brake booster
   - Brake booster hose
   - Intake air duct

   Are the parts OK?

   YES—Go to step 3.

   NO—Repair or replace parts with leaks, then go to step 7.

3. Start the engine. Hold the engine speed at 3,000 rpm without load (A/T in P or N, M/T in neutral) until the radiator fan comes on, then let it idle.

4. Check for these conditions:

   - Engine coolant temperature (ECT SENSOR 1) above 158 °F (70 °C)
   - A/T in N, M/T in neutral
   - All electrical loads off

5. Monitor the ENGINE SPEED in the DATA LIST with the HDS, and hold the engine speed at 2,500 rpm. Once the engine speed is met, hold the accelerator pedal steady for more than 10 seconds.

   Did the engine speed vary more than 100 rpm from 2,500 rpm?

   YES—Repeat step 5.

   NO—Go to step 6.

6. While holding the engine speed at 2,500 rpm, check the MAF SENSOR in the DATA LIST with the HDS.

   Is there about 5.6—7.8 gm/s (M/T) or 6.5—9.1 gm/s (A/T)?

   YES—Check the engine valve clearances, and adjust them if necessary (see page 6-9). If the valve clearances are OK, replace the injectors (see page 11-207), then go to step 7.

   NO—Replace the MAF sensor/IAT sensor (see page 11-211), then go to step 7.

7. Turn the ignition switch to ON (II).

8. Reset the ECM/PCM with the HDS.

9. Do the ECM/PCM idle learn procedure (see page 11-317).

10. Start the engine. Hold the engine speed at 3,000 rpm without load (A/T in P or N, M/T in neutral) until the radiator fan comes on, then let it idle.

11. Test-drive under these conditions:

    - Engine coolant temperature (ECT SENSOR 1) above 158 °F (70 °C)
    - A/T in D, M/T in 4th
    - Drive at a steady speed between 15—75 mph (24—120 km/h) for 15 minutes

    NOTE: DTC P0171 and/or P0172 may take up to 80 minutes of test driving to set. Using the HDS, monitor the air fuel feed back average (AF FB AVE). If the AF FB AVE stays within 0.80—1.25, there is no problem at this time.

12. Check for Temporary DTCs or DTCs with the HDS.

    Is DTC P0171 or P0172 indicated?

    YES—Go to step 1.

    NO—Troubleshooting is complete. If any other Temporary DTCs or DTCs are indicated, go to the indicated DTC's troubleshooting. ■

DTC P0300: Random Misfire and Any Combination of the Following:

DTC P0301: No. 1 Cylinder Misfire Detected

DTC P0302: No. 2 Cylinder Misfire Detected

DTC P0303: No. 3 Cylinder Misfire Detected

DTC P0304: No. 4 Cylinder Misfire Detected

Special Tools Required
- Pressure gauge adapter 07NAJ-P07010A
- A/T low pressure gauge w/panel 07406-0070301
- A/T pressure hose 07406-0020201
- A/T pressure hose, 2,210 mm 07MAJ-PY4011A
- A/T pressure adapter 07MAJ-PY40120
- Oil pressure hose 07ZAJ-S5A0200

NOTE:
- Before you troubleshoot, record all freeze data and any on-board snapshot, and review the general troubleshooting information (see page 11-3).
- If the misfire is frequent enough to trigger detection of increased emissions during two consecutive driving cycles, the MIL will come on, and DTC P0300 (and some combination of P0301 through P0304) will be stored.
- If the misfire is frequent enough to damage the catalyst, the MIL will flash whenever the misfire occurs, and DTC P0300 (and some combination of P0301 through P0304) will be stored. When the misfire stops, the MIL will remain on.
- If any of the DTCs listed below are indicated at the same time as the random misfire DTCs, troubleshoot those DTCs first, then recheck for random misfire DTCs:

  P0101, P0102, P0103: Mass air flow (MAF) sensor
  P0107, P0108: Manifold absolute pressure (MAP) sensor
  P0171, P0172: Fuel system
  P0335, P0339: Crankshaft position (CKP) sensor
  P0365, P0369: Camshaft position (CMP) sensor B
  P0506, P0507: Idle control system
  P2646, P2647, P2648, P2649: VTEC system

1. Turn the ignition switch to ON (II).

2. Clear the DTC with the HDS.

3. Start the engine, and let it idle without load (A/T in P or N, M/T in neutral).

4. Monitor the OBD STATUS for DTC P0301, P0302, P0303, or P0304 in the DTCs MENU with the HDS.

   Does the screen indicate FAILED?

   YES—Go to step 9.

   NO—If the screen indicates PASSED, go to step 5. If the screen indicates EXECUTING, keep idling until a result comes on. If the screen indicates OUT OF CONDITION or NOT COMPLETED, wait for several minutes, then recheck.

5. Check the CYL1 MISFIRE, CYL2 MISFIRE, CYL3 MISFIRE, and/or CYL4 MISFIRE in the DATA LIST for 10 minutes with the HDS.

   Does the CYL1 MISFIRE, CYL2 MISFIRE, CYL3 MISFIRE, and/or CYL4 MISFIRE show misfire counts?

   YES—Go to step 9.

   NO—Go to step 6.

6. Test-drive the vehicle for several minutes in the range of these recorded freeze data parameters:

   - ENGINE SPEED
   - VSS
   - REL TP SENSOR
   - CLV (calculated load value)
   - APP SENSOR

7. Monitor the OBD STATUS for DTC P0301, P0302, P0303, or P0304 in the DTCs MENU with the HDS.

   Does the screen indicate FAILED?

   YES—Go to step 9.

   NO—If the screen indicates PASSED, go to step 8. If the screen indicates EXECUTING, keep driving until a result comes on. If the screen indicates OUT OF CONDITION or NOT COMPLETED, go to step 6 and recheck.

(cont'd)

DTC Troubleshooting (cont'd)

8. Check the CYL1 MISFIRE, CYL2 MISFIRE, CYL3 MISFIRE, and/or CYL4 MISFIRE in the DATA LIST for 10 minutes with the HDS.

   Does the CYL1 MISFIRE, CYL2 MISFIRE, CYL3 MISFIRE, and/or CYL4 MISFIRE show misfire counts?

   YES—Go to step 9.

   NO—Intermittent failure, the system is OK at this time.■

9. Turn the ignition switch to LOCK (0).

10. Check the fuel quality.

    Is the quality good?

    YES—Go to step 11.

    NO—Drain the tank and fill with a known-good fuel, then go to step 25.

11. Inspect the spark plugs (see page 4-20). If the spark plugs are fouled or worn, replace them.

12. Test-drive the vehicle for several minutes in the range of these recorded freeze data parameters:

    - ENGINE SPEED
    - VSS
    - REL TP SENSOR
    - CLV (calculated load value)
    - APP SENSOR

13. Check the CYL1 MISFIRE, CYL2 MISFIRE, CYL3 MISFIRE, and/or CYL4 MISFIRE in the DATA LIST for 10 minutes with the HDS.

    Does the CYL1 MISFIRE, CYL2 MISFIRE, CYL3 MISFIRE, and/or CYL4 MISFIRE show misfire counts?

    YES—Go to step 14.

    NO—Go to step 25.

14. Check the fuel pressure (see page 11-335).

    Is the fuel pressure OK?

    YES—Go to step 15.

    NO—
    - If the fuel pressure is too high, replace the fuel pressure regulator (see page 11-350), then go to step 25.
    - If the fuel pressure is too low, check the fuel pump, the fuel feed pipe, and the fuel filter. If they are OK, replace the fuel pressure regulator (see page 11-350), then go to step 25.

15. Start the engine. Hold the engine speed at 3,000 rpm without load (A/T in P or N, M/T in neutral) until the radiator fan comes on, then let it idle.

16. Check for these conditions:

    - Engine coolant temperature (ECT SENSOR 1) above 176 °F (80 °C)
    - A/T in P or N, M/T in neutral
    - All electrical loads off

17. Monitor the ENGINE SPEED in the DATA LIST with the HDS, and hold the engine speed at 2,500 rpm. Once the engine speed is met, hold the accelerator pedal steady for more than 10 seconds.

    Did the engine speed vary more than 100 rpm from 2,500 rpm?

    YES—Repeat step 17.

    NO—Go to step 18.

18. While holding the engine speed at 2,500 rpm, check the MAF SENSOR in the DATA LIST with the HDS.

    Is there about 5.6—7.8 gm/s (M/T) or 6.5—9.1 gm/s (A/T)?

    YES—Go to step 19.

    NO—Replace the MAF sensor/IAT sensor (see page 11-211), then go to step 25.

19. Turn the ignition switch to LOCK (0).

20. Remove the rocker arm oil pressure switch (see page 11-304) (PZEV model: Remove rocker arm oil pressure switch A) (see page 11-305).

21. Attach the special tools to the rocker arm oil control valve as shown, then attach the rocker arm oil pressure switch (A) in the pressure gauge adapter (B).

All models except PZEV

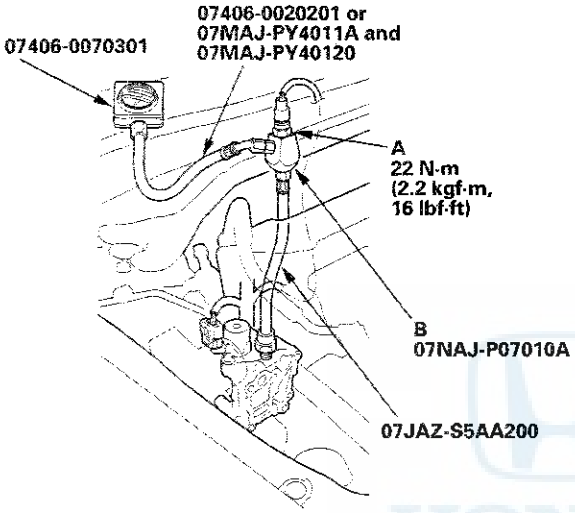

PZEV model

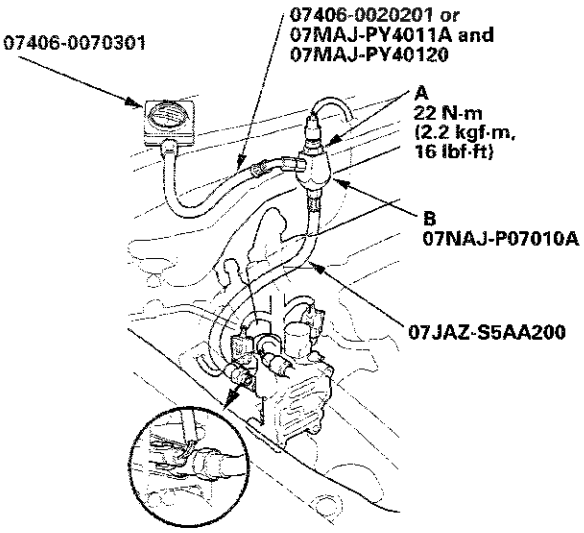

22. Reconnect the rocker arm oil pressure switch (rocker arm oil pressure switch A) 2P connector.

23. Start the engine. Hold the engine speed at 3,000 rpm without load (A/T in P or N, M/T in neutral) until the radiator fan comes on, then let it idle.

24. Check the oil pressure at engine speeds of 1,000 rpm and 2,000 rpm.

    Is the oil pressure below 49 kPa (0.5 kgf/cm², 7 psi)?

    YES—Check for air in the fuel line, then go to step 25.

    NO—Inspect the VTEC system, then go to step 25.

25. Turn the ignition switch to ON (II).

26. Reset the ECM/PCM with the HDS.

27. Clear the CKP pattern with the HDS.

28. Do the ECM/PCM idle learn procedure (see page 11-317).

29. Do the CKP pattern learn procedure (see page 11-5).

(cont'd)

DTC Troubleshooting (cont'd)

30. Test-drive the vehicle for several minutes in the range of these recorded freeze data parameters:

    - ENGINE SPEED
    - VSS
    - REL TP SENSOR
    - CLV (calculated load value)
    - APP SENSOR

31. Check for Temporary DTCs or DTCs with the HDS.

    Is DTC P0300, P0301, P0302, P0303, or P0304 indicated?

    YES—Check for poor connections or loose terminals at the ignition coils, the injectors, and the ECM/PCM, then go to the troubleshooting for DTC P0301, P0302, P0303, or P0304 (see page 11-110).

    NO—Go to step 32.

32. Monitor the OBD STATUS for DTC P0301, P0302, P0303, or P0304 in the DTCs MENU with the HDS.

    Does the screen indicate PASSED?

    YES—Troubleshooting is complete. If any other Temporary DTCs or DTCs were indicated in step 31, go to the indicated DTC's troubleshooting. ■

    NO—If the screen indicates FAILED, go to step 1 and recheck. If the screen indicates EXECUTING, keep driving until a result comes on. If the screen indicates OUT OF CONDITION or NOT COMPLETED, go to step 30.

DTC P0301: No. 1 Cylinder Misfire Detected

DTC P0302: No. 2 Cylinder Misfire Detected

DTC P0303: No. 3 Cylinder Misfire Detected

DTC P0304: No. 4 Cylinder Misfire Detected

NOTE: Before you troubleshoot, record all freeze data and any on-board snapshot, and review the general troubleshooting information (see page 11-3).

1. Turn the ignition switch to ON (II).

2. Clear the DTC with the HDS.

3. Start the engine, and let it idle without load (A/T in P or N, M/T in neutral).

4. Monitor the OBD STATUS for DTC P0301, P0302, P0303, or P0304 in the DTCs MENU with the HDS.

   Does the screen indicate FAILED?

   YES—Go to step 9.

   NO—If the screen indicates PASSED, go to step 5. If the screen indicates EXECUTING, keep idling until a result comes on. If the screen indicates OUT OF CONDITION or NOT COMPLETED, wait for several minutes, and recheck.

5. Check the CYL1 MISFIRE, CYL2 MISFIRE, CYL3 MISFIRE, and/or CYL4 MISFIRE in the DATA LIST for 10 minutes with the HDS.

   Does the CYL1 MISFIRE, CYL2 MISFIRE, CYL3 MISFIRE, and/or CYL4 MISFIRE show misfire counts?

   YES—Go to step 9.

   NO—Go to step 6.

6. Test-drive the vehicle for several minutes in the range of these recorded freeze data parameters:

   - ENGINE SPEED
   - VSS
   - REL TP SENSOR
   - CLV (calculated load value)
   - APP SENSOR

7. Monitor the OBD STATUS for DTC P0301, P0302, P0303, or P0304 in the DTCs MENU with the HDS.

   Does the screen indicate FAILED?

   YES—Go to step 9.

   NO—If the screen indicates PASSED, go to step 8. If the screen indicates EXECUTING, keep driving until a result comes on. If the screen indicates OUT OF CONDITION or NOT COMPLETED, go to step 6 and recheck.

8. Check the CYL1 MISFIRE, CYL2 MISFIRE, CYL3 MISFIRE, and/or CYL4 MISFIRE in the DATA LIST for 10 minutes with the HDS.

   Does the CYL1 MISFIRE, CYL2 MISFIRE, CYL3 MISFIRE, and/or CYL4 MISFIRE show misfire counts?

   YES—Go to step 9.

   NO—Intermittent failure, the system is OK at this time. Check for loose wires or poor connections in the fuel system circuit. ■

9. Turn the ignition switch to LOCK (0).

10. Exchange the ignition coil from the problem cylinder with one from another cylinder.

11. Test-drive the vehicle for several minutes in the range of these recorded freeze data parameters:

    - ENGINE SPEED
    - VSS
    - REL TP SENSOR
    - CLV (calculated load value)
    - APP SENSOR

12. Check the CYL1 MISFIRE, CYL2 MISFIRE, CYL3 MISFIRE, and/or CYL4 MISFIRE in the DATA LIST for 10 minutes with the HDS.

    Does the CYL1 MISFIRE, CYL2 MISFIRE, CYL3 MISFIRE, and/or CYL4 MISFIRE show misfire counts?

    YES—Go to step 13.

    NO—Intermittent misfire due to poor contact at the ignition coil connector (no misfire at this time). Check for poor connections or loose terminals at the ignition coil. ■

13. Determine which cylinder had the misfire.

    Does the misfire occur in the cylinder where the ignition coil was exchanged?

    YES—Replace the faulty ignition coil (see page 4-20), then go to step 40.

    NO—Go to step 14.

14. Turn the ignition switch to LOCK (0).

15. Exchange the spark plug from the problem cylinder with one from another cylinder.

16. Test-drive the vehicle for several minutes in the range of these recorded freeze data parameters:

    - ENGINE SPEED
    - VSS
    - REL TP SENSOR
    - CLV (calculated load value)
    - APP SENSOR

17. Check the CYL1 MISFIRE, CYL2 MISFIRE, CYL3 MISFIRE, and/or CYL4 MISFIRE in the DATA LIST for 10 minutes with the HDS.

    Does the CYL1 MISFIRE, CYL2 MISFIRE, CYL3 MISFIRE, and/or CYL4 MISFIRE show misfire counts?

    YES—Go to step 18.

    NO—Intermittent misfire due to spark plug fouling (no misfire at this time). ■

(cont'd)

DTC Troubleshooting (cont'd)

18. Determine which cylinder had the misfire.

    Does the misfire occur in the cylinder where the spark plug was exchanged?

    YES—Replace the faulty spark plug, then go to step 40.

    NO—Go to step 19.

19. Turn the ignition switch to LOCK (0).

20. Exchange the injector from the problem cylinder with one from the another cylinder.

21. Start the engine, and let it idle for 2 minutes.

22. Test-drive the vehicle for several minutes in the range of these recorded freeze data parameters:

    - ENGINE SPEED
    - VSS
    - REL TP SENSOR
    - CLV (calculated load value)
    - APP SENSOR

23. Check the CYL1 MISFIRE, CYL2 MISFIRE, CYL3 MISFIRE, and/or CYL4 MISFIRE in the DATA LIST for 10 minutes with the HDS.

    Does the CYL1 MISFIRE, CYL2 MISFIRE, CYL3 MISFIRE, and/or CYL4 MISFIRE show misfire counts?

    YES—Go to step 24.

    NO—Intermittent misfire due to bad contact at the injector connector (no misfire at this time). Check for poor connections or loose terminals at the injector. ■

24. Determine which cylinder had the misfire.

    Does the misfire occur in the cylinder where the injector was exchanged?

    YES—Replace the faulty injector (see page 11-207), then go to step 40.

    NO—Go to step 25.

25. Do an engine compression and a cylinder leakdown test (see page 6-6).

    Did the engine pass both tests?

    YES—Go to step 26.

    NO—Repair the engine, then go to step 40.

26. Do the VTEC rocker arm test (see page 6-7).

    Did the engine pass the test?

    YES—Go to step 27.

    NO—Repair the VTEC rocker arm (see page 6-34), then go to step 40.

27. Turn the ignition switch to LOCK (0).

28. Jump the SCS line with the HDS.

29. Disconnect ECM/PCM connector C (49P).

30. Turn the ignition switch to ON (II).

31. Measure the voltage between body ground and the appropriate ECM/PCM connector terminal of the problem cylinder (see table).

PROBLEM CYLINDER	DTC	ECM/PCM TERMINAL	WIRE COLOR
No. 1	P0301	C5	BRN
No. 2	P0302	C6	RED
No. 3	P0303	C7	BLU
No. 4	P0304	C8	YEL

ECM/PCM CONNECTOR C (49P)

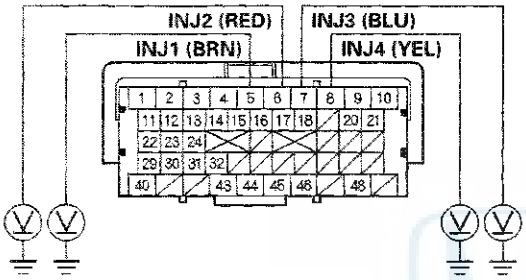

Terminal side of female terminals

Is there battery voltage?

YES—Go to step 39.

NO—Go to step 32.

32. Turn the ignition switch to LOCK (0).

33. Disconnect the injector 2P connector from the problem cylinder.

34. Turn the ignition switch to ON (II).

35. Measure the voltage between injector 2P connector terminal No. 1 and body ground.

INJECTOR 2P CONNECTOR

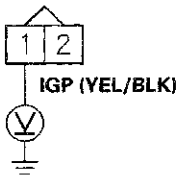

Wire side of female terminals

Is there battery voltage?

YES—Go to step 36.

NO—Repair open in the wire between the injector and PGM-FI main relay 1, then go to step 40.

36. Turn the ignition switch to LOCK (0).

(cont'd)

DTC Troubleshooting (cont'd)

37. Check for continuity between body ground and the ECM/PCM connector terminal of the problem cylinder (see table).

PROBLEM CYLINDER	DTC	ECM/PCM TERMINAL	WIRE COLOR
No. 1	P0301	C5	BRN
No. 2	P0302	C6	RED
No. 3	P0303	C7	BLU
No. 4	P0304	C8	YEL

ECM/PCM CONNECTOR C (49P)

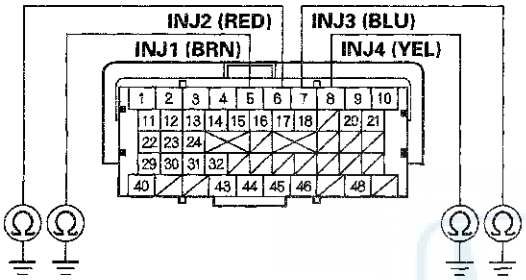

Is there continuity?

YES—Repair short in the wire between the ECM/PCM and the injector, then go to step 40.

NO—Go to step 38.

38. Check for continuity between appropriate injector 2P connector terminal No. 2 and the ECM/PCM connector terminal of the problem cylinder (see table).

PROBLEM CYLINDER	DTC	ECM/PCM TERMINAL	WIRE COLOR
No. 1	P0301	C5	BRN
No. 2	P0302	C6	RED
No. 3	P0303	C7	BLU
No. 4	P0304	C8	YEL

INJECTOR 2P CONNECTOR

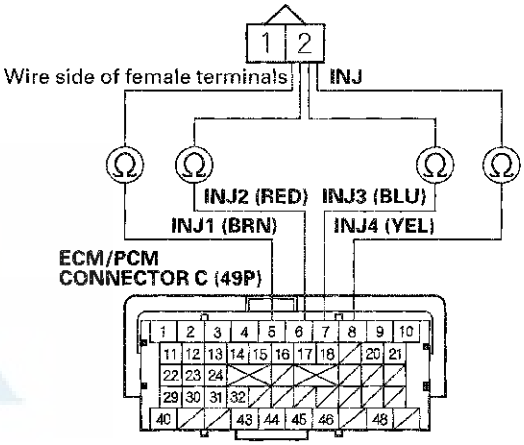

Is there continuity?

YES—Go to step 39.

NO—Repair open in the wire between the ECM/PCM and the injector, then go to step 40.

39. At the injector side, measure the resistance between injector 2P connector terminals No. 1 and No. 2.

INJECTOR 2P CONNECTOR

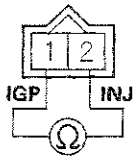

Terminal side of male terminals

Is there 10– 13 Ω ?

YES—Go to step 50.

NO—Replace the injector (see page 11-207), then go to step 40.

40. Turn the ignition switch to LOCK (0).

41. Reconnect all connectors.

42. Turn the ignition switch to ON (II).

43. Reset the ECM/PCM with the HDS.

44. Clear the CKP pattern with the HDS.

45. Do the ECM/PCM idle learn procedure (see page 11-317).

46. Do the CKP pattern learn procedure (see page 11-5).

47. Test-drive the vehicle for several minutes in the range of these recorded freeze data parameters:

- ENGINE SPEED
- VSS
- REL TP SENSOR
- CLV (calculated load value)
- APP SENSOR

48. Check for Temporary DTCs or DTCs with the HDS.

Is DTC P0301, P0302, P0303, or P0304 indicated?

YES—Check for poor connections or loose terminals at the ignition coils, the injectors, and the ECM/PCM, then go to the troubleshooting for DTC P0300, P0301, P0302, P0303, or P0304 (see page 11-107).

NO—Go to step 49.

49. Monitor the OBD STATUS for DTC P0301, P0302, P0303, or P0304 in the DTCs MENU with the HDS.

Does the screen indicate PASSED?

YES—Troubleshooting is complete. If any other Temporary DTCs or DTCs were indicated in step 48, go to the indicated DTC's troubleshooting. ■

NO—If the screen indicates FAILED, check for poor connections or loose terminals at the ignition coils, the injectors, and the ECM/PCM, then go to step 1. If the screen indicates EXECUTING, keep driving until a result comes on. If the screen indicates OUT OF CONDITION or NOT COMPLETED, go to step 47.

50. Reconnect all connectors.

51. Update the ECM/PCM if it does not have the latest software (see page 11-215), or substitute a known-good ECM/PCM (see page 11-7).

52. Test-drive the vehicle for several minutes in the range of these recorded freeze data parameters:

- ENGINE SPEED
- VSS
- REL TP SENSOR
- CLV (calculated load value)
- APP SENSOR

(cont'd)

DTC Troubleshooting (cont'd)

53. Check for Temporary DTCs or DTCs with the HDS.

    Is DTC P0301, P0302, P0303, or P0304 indicated?

    YES—Check for poor connections or loose terminals at the ignition coils, the injectors, and the ECM/PCM. If the ECM/PCM was updated, substitute a known-good ECM/PCM (see page 11-7), then go to step 52. If the ECM/PCM was substituted, go to step 1.

    NO—Go to step 54.

54. Monitor the OBD STATUS for DTC P0301, P0302, P0303, or P0304 in the DTCs MENU with the HDS.

    Does the screen indicate PASSED?

    YES—If the ECM/PCM was updated, troubleshooting is complete. If the ECM/PCM was substituted, replace the original ECM/PCM (see page 11-216). If any other Temporary DTCs or DTCs were indicated in step 53, go to the indicated DTC's troubleshooting. ■

    NO—If the screen indicates FAILED, check for poor connections or loose terminals at the ignition coils, the injectors, and the ECM/PCM. If the ECM/PCM was updated, substitute a known-good ECM/PCM (see page 11-7), then go to step 52. If the ECM/PCM was substituted, go to step 1. If the screen indicates EXECUTING, keep driving until a result comes on. If the screen indicates OUT OF CONDITION or NOT COMPLETED, go to step 52.

DTC P0325: Knock Sensor Circuit Malfunction

NOTE: Before you troubleshoot, record all freeze data and any on-board snapshot, and review the general troubleshooting information (see page 11-3).

1. Turn the ignition switch to ON (II).
2. Clear the DTC with the HDS.
3. Start the engine. Hold the engine speed at 3,000 rpm without load (A/T in P or N, M/T in neutral) until the radiator fan comes on, then let it idle.
4. Hold the engine speed between 3,000—4,000 rpm for at least 10 seconds.
5. Check for Temporary DTCs or DTCs with the HDS.

   Is DTC P0325 indicated?

   YES—Go to step 6.

   NO—Intermittent failure, the system is OK at this time. Check for poor connections or loose terminals at the knock sensor and the ECM/PCM. ■

6. Turn the ignition switch to LOCK (0).
7. Jump the SCS line with the HDS.
8. Disconnect the knock sensor 1P connector (see page 11-213).
9. Disconnect ECM/PCM connector C (49P).

10. Check for continuity between ECM/PCM connector terminal C46 and body ground.

ECM/PCM CONNECTOR C (49P)

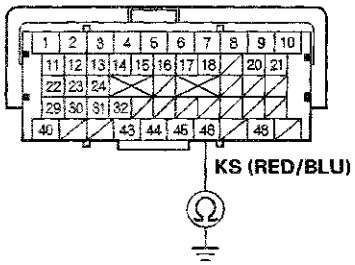

Terminal side of female terminals

Is there continuity?

YES—Repair short in the wire between the ECM/PCM (C46) and the knock sensor, then go to step 14.

NO—Go to step 11.

11. Connect the knock sensor 1P connector terminal to body ground with a jumper wire.

KNOCK SENSOR 1P CONNECTOR

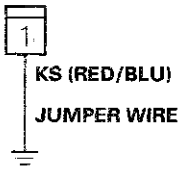

Wire side of female terminals

12. Check for continuity between ECM/PCM connector terminal C46 and body ground.

ECM/PCM CONNECTOR C (49P)

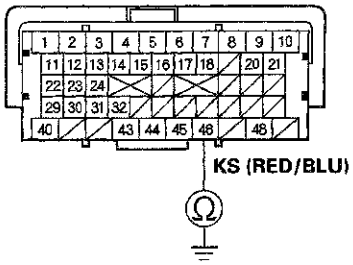

Terminal side of female terminals

Is there continuity?

YES—Go to step 13.

NO—Repair open in the wire between the ECM/PCM (C46) and the knock sensor, then go to step 14.

13. Replace the knock sensor (see page 11-213).

14. Reconnect all connectors.

15. Turn the ignition switch to ON (II).

16. Reset the ECM/PCM with the HDS.

17. Do the ECM/PCM idle learn procedure (see page 11-317).

18. Hold the engine speed between 3,000—4,000 rpm for at least 10 seconds.

19. Check for Temporary DTCs or DTCs with the HDS.

Is DTC P0325 indicated?

YES—Go to step 21.

NO—Go to step 20.

(cont'd)

DTC Troubleshooting (cont'd)

20. Monitor the OBD STATUS for DTC P0325 in the DTCs MENU with the HDS.

    Does the screen indicate PASSED?

    YES—Troubleshooting is complete. If any other Temporary DTCs or DTCs were indicated in step 19, go to the indicated DTC's troubleshooting.■

    NO—If the screen indicates FAILED, check for poor connections or loose terminals at the knock sensor and the ECM/PCM, then go to step 1. If the screen indicates NOT COMPLETED, go to step 18.

21. Update the ECM/PCM if it does not have the latest software (see page 11-215), or substitute a known-good ECM/PCM (see page 11-7).

22. Hold the engine speed between 3,000—4,000 rpm for at least 10 seconds.

23. Check for Temporary DTCs or DTCs with the HDS.

    Is DTC P0325 indicated?

    YES—Check for poor connections or loose terminals at the knock sensor and the ECM/PCM. If the ECM/PCM was updated, substitute a known-good ECM/PCM (see page 11-7), then go to step 22. If the ECM/PCM was substituted, go to step 1.

    NO—Go to step 24.

24. Monitor the OBD STATUS for DTC P0325 in the DTCs MENU with the HDS.

    Does the screen indicate PASSED?

    YES—If the ECM/PCM was updated, troubleshooting is complete. If the ECM/PCM was substituted, replace the original ECM/PCM (see page 11-216). If any other Temporary DTCs or DTCs were indicated in step 23, go to the indicated DTC's troubleshooting.■

    NO—If the screen indicates FAILED, check for poor connections or loose terminals at the knock sensor and the ECM/PCM. If the ECM/PCM was updated, substitute a known-good ECM/PCM (see page 11-7), then go to step 22. If the ECM/PCM was substituted, go to step 1. If the screen indicates NOT COMPLETED, go to step 22.

DTC P0335: CKP Sensor No Signal

NOTE: Before you troubleshoot, record all freeze data and any on-board snapshot, and review the general troubleshooting information (see page 11-3).

1. Turn the ignition switch to ON (II).
2. Clear the DTC with the HDS.
3. Start the engine.
4. Check for Temporary DTCs or DTCs with the HDS.

   Is DTC P0335 indicated?

   YES—Go to step 5.

   NO—Intermittent failure, the system is OK at this time. Check for poor connections or loose terminals at the CKP sensor and the ECM/PCM.■

5. Turn the ignition switch to LOCK (0).
6. Disconnect the CKP sensor 3P connector.
7. Turn the ignition switch to ON (II).
8. Measure the voltage between CKP sensor 3P connector terminal No. 3 and body ground.

CKP SENSOR 3P CONNECTOR

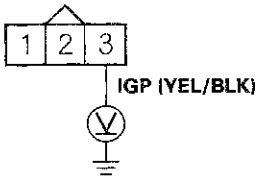

Wire side of female terminals

Is there battery voltage?

YES—Go to step 9.

NO—Repair open in the wire between the CKP sensor and PGM-FI main relay 1, then go to step 19.

9. Measure the voltage between CKP sensor 3P connector terminal No. 1 and body ground.

CKP SENSOR 3P CONNECTOR

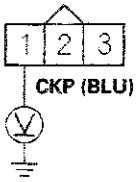

Wire side of female terminals

Is there about 5 V?

YES—Go to step 10.

NO—Go to step 11.

10. Measure the voltage between CKP sensor 3P connector terminals No. 2 and No. 3.

CKP SENSOR 3P CONNECTOR

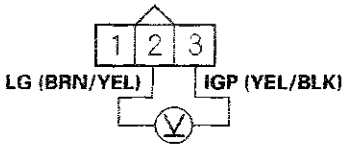

Wire side of female terminals

Is there battery voltage?

YES—Go to step 17.

NO—Repair open in the wire between the CKP sensor and G101 (see page 22-20), then go to step 19.

11. Turn the ignition switch to LOCK (0).

12. Jump the SCS line with the HDS.

13. Disconnect ECM/PCM connector C (49P).

14. Check for continuity between ECM/PCM connector terminal C32 and body ground.

ECM/PCM CONNECTOR C (49P)

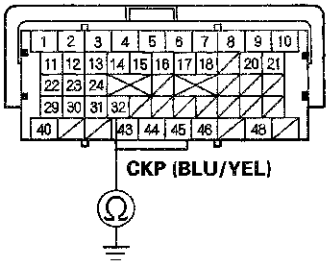

Terminal side of female terminals

Is there continuity?

YES—Repair short in the wire between the ECM/PCM (C32) and the CKP sensor, then go to step 19.

NO—Go to step 15.

15. Connect CKP sensor 3P connector terminal No. 1 to body ground with a jumper wire.

CKP SENSOR 3P CONNECTOR

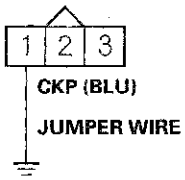

Wire side of female terminals

(cont'd)

DTC Troubleshooting (cont'd)

16. Check for continuity between ECM/PCM connector terminal C32 and body ground.

ECM/PCM CONNECTOR C (49P)

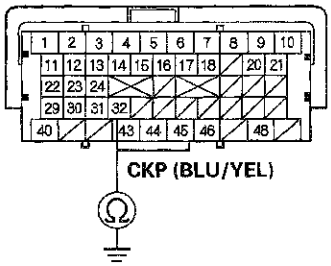

Terminal side of female terminals

Is there continuity?

YES—Go to step 26.

NO—Repair open in the wire between the ECM/PCM (C32) and the CKP sensor, then go to step 19.

17. Turn the ignition switch to LOCK (0).

18. Replace the CKP sensor (see page 11-210).

19. Reconnect all connectors.

20. Turn the ignition switch to ON (II).

21. Reset the ECM/PCM with the HDS.

22. Clear the CKP pattern with the HDS.

23. Do the ECM/PCM idle learn procedure (see page 11-317).

24. Do the CKP pattern learn procedure (see page 11-5).

25. Check for Temporary DTCs or DTCs with the HDS.

Is DTC P0335 indicated?

YES—Check for poor connections or loose terminals at the CKP sensor and the ECM/PCM, then go to step 1.

NO—Troubleshooting is complete. If any other Temporary DTCs or DTCs are indicated, go to the indicated DTC's troubleshooting. ■

26. Reconnect all connectors.

27. Update the ECM/PCM if it does not have the latest software (see page 11-215), or substitute a known-good ECM/PCM (see page 11-7).

28. Check for Temporary DTCs or DTCs with the HDS.

Is DTC P0335 indicated?

YES—Check for poor connections or loose terminals at the CKP sensor and the ECM/PCM. If the ECM/PCM was updated, substitute a known-good ECM/PCM (see page 11-7), then recheck. If the ECM/PCM was substituted, go to step 1.

NO—If the ECM/PCM was updated, troubleshooting is complete. If the ECM/PCM was substituted, replace the original ECM/PCM (see page 11-216). If any other Temporary DTCs or DTCs are indicated, go to the indicated DTC's troubleshooting. ■

DTC P0339: CKP Sensor Circuit Intermittent Interruption

NOTE: Before you troubleshoot, record all freeze data and any on-board snapshot, and review the general troubleshooting information (see page 11-3).

1. Turn the ignition switch to ON (II).

2. Clear the DTC with the HDS.

3. Start the engine, and let it idle for 10 seconds.

4. Check the CKP NOISE in the DATA LIST with the HDS.

   Are 0 counts indicated?

   YES—Go to step 7.

   NO—Go to step 5.

5. Test-drive the vehicle for several minutes in the range of these recorded freeze data parameters:

   - ENGINE SPEED
   - VSS

6. Check the CKP NOISE in the DATA LIST with the HDS.

   Are 0 counts indicated?

   YES—Go to step 7.

   NO—Intermittent failure, the system is OK at this time. Check for poor connections or loose terminals at the CKP sensor and the ECM/PCM. ■

7. Check for poor or loose connections and terminals at these locations:

   - CKP sensor
   - ECM/PCM
   - Engine ground
   - Body ground

   Are the connections and terminals OK?

   YES—Go to step 8.

   NO—Repair the connections or terminals, then go to step 11.

8. Remove the cam chain case (see page 6-13), and check for damage on the CKP sensor pulser plate.

   Is the pulser plate damaged?

   YES—Replace the CKP sensor pulser plate (see page 7-30), then go to step 11.

   NO—Go to step 9.

9. Turn the ignition switch to LOCK (0).

10. Replace the CKP sensor (see page 11-210).

11. Turn the ignition switch to ON (II).

12. Reset the ECM/PCM with the HDS.

13. Clear the CKP pattern with the HDS.

14. Do the ECM/PCM idle learn procedure (see page 11-317).

15. Do the CKP pattern learn procedure (see page 11-5).

16. Start the engine, and let it idle for 10 seconds.

17. Check for Temporary DTCs or DTCs with the HDS.

    Is DTC P0339 indicated?

    YES—Check for poor connections or loose terminals at the CKP sensor and the ECM/PCM, then go to step 1.

    NO—Troubleshooting is complete. If any other Temporary DTCs or DTCs are indicated, go to the indicated DTC's troubleshooting. ■

DTC Troubleshooting (cont'd)

DTC P0351: No. 1 Cylinder Ignition Coil Circuit Malfunction

DTC P0352: No. 2 Cylinder Ignition Coil Circuit Malfunction

DTC P0353: No. 3 Cylinder Ignition Coil Circuit Malfunction

DTC P0354: No. 4 Cylinder Ignition Coil Circuit Malfunction

NOTE: Before you troubleshoot, record all freeze data and any on-board snapshot, and review the general troubleshooting information (see page 11-3).

1. Turn the ignition switch to ON (II).
2. Clear the DTC with the HDS.
3. Start the engine.
4. Check for Temporary DTCs or DTCs with the HDS.

   Is DTC P0351, P0352, P0353, and/or P0354 indicated?

   YES—Go to step 5.

   NO—Intermittent failure, the system is OK at this time. Check for poor connections or loose terminals at the ignition coil and the ECM/PCM. ■

5. Turn the ignition switch to LOCK (0).
6. Exchange the ignition coil from the problem cylinder with one from another cylinder.
7. Start the engine.
8. Check for Temporary DTCs or DTCs with the HDS.

   Is a DTC indicated at the exchanged cylinder?

   YES—Replace the faulty ignition coil (see page 4-20), then go to step 25.

   NO—Go to step 9.

9. Turn the ignition switch to LOCK (0).
10. Check the No. 13 IG COIL (15 A) fuse in the under-hood fuse/relay box.

    Is the fuse OK?

    YES—Go to step 11.

    NO—Go to step 12.

11. Test the ignition coil relay (A) in the under-hood fuse/relay box (see page 22-91).

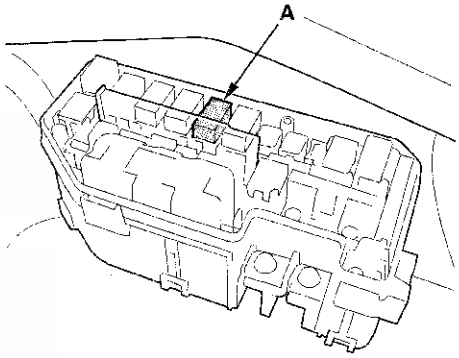

Is the ignition coil relay OK?

YES—Go to step 15.

NO—Replace the ignition coil relay, then go to step 25.

12. Remove the ignition coil relay (A) from the under-hood fuse/relay box.

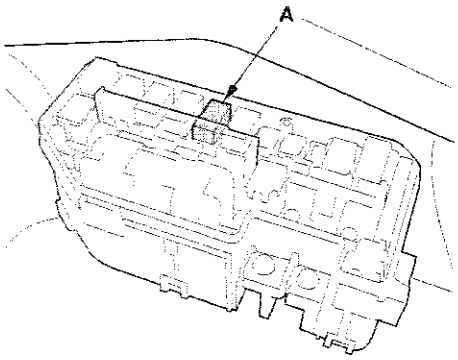

13. Disconnect all ignition coil 3P connectors.

14. Check for continuity between No. 1 ignition coil 3P connector terminal No. 3 and body ground.

No. 1 IGNITION COIL 3P CONNECTOR

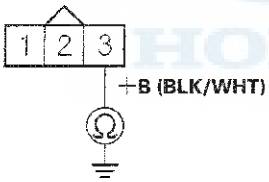

Wire side of female terminals

Is there continuity?

YES—Repair short in the wire between the ignition coils and the ignition coil relay. Also replace the No. 13 IG COIL (15 A) fuse, then go to step 25.

NO—Check the under-hood fuse/relay box, and replace it if needed (see page 22-83), then go to step 25.

15. Reinstall the ignition coil relay.

16. Disconnect the ignition coil 3P connector from the problem cylinder.

17. Turn the ignition switch to ON (II).

18. Measure the voltage between ignition coil 3P connector terminal No. 3 of the problem cylinder and body ground (see table).

PROBLEM CYLINDER	DTC
No. 1	P0351
No. 2	P0352
No. 3	P0353
No. 4	P0354

IGNITION COIL 3P CONNECTOR

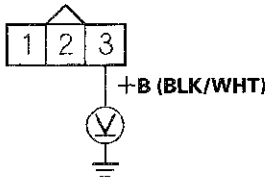

Wire side of female terminals

Is there battery voltage?

YES—Go to step 19.

NO—Repair open in the wire between the ignition coil and the ignition coil relay, then go to step 25.

(cont'd)

DTC Troubleshooting (cont'd)

19. Turn the ignition switch to LOCK (0).

20. Check for continuity between ignition coil 3P connector terminal No. 2 of the problem cylinder and body ground (see table).

PROBLEM CYLINDER	DTC
No. 1	P0351
No. 2	P0352
No. 3	P0353
No. 4	P0354

IGNITION COIL 3P CONNECTOR

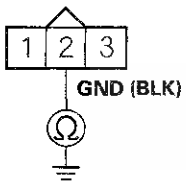

Wire side of female terminals

Is there continuity?

YES—Go to step 21.

NO—Repair open in the wire between the ignition coil and G102, then go to step 25.

21. Jump the SCS line with the HDS.

22. Disconnect ECM/PCM connector C (49P).

23. Check for continuity between body ground and the ECM/PCM connector terminal of the problem cylinder (see table).

PROBLEM CYLINDER	DTC	ECM/PCM TERMINAL	WIRE COLOR
No. 1	P0351	C15	YEL/GRN
No. 2	P0352	C16	BLU/RED
No. 3	P0353	C17	WHT/BLU
No. 4	P0354	C18	BRN

ECM/PCM CONNECTOR C (49P)

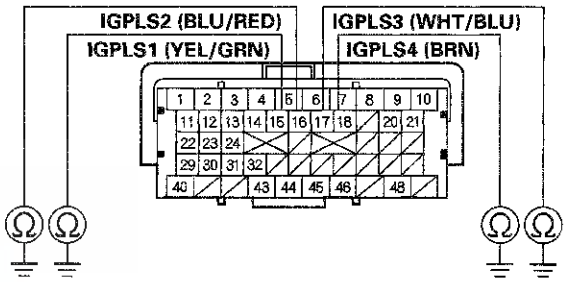

Terminal side of female terminals

Is there continuity?

YES—Repair short in the wire between the ECM/PCM and the ignition coil, then go to step 25.

NO—Go to step 24.

24. Check for continuity between appropriate ignition coil 3P connector terminal No. 1 and the ECM/PCM connector terminal of the problem cylinder (see table).

PROBLEM CYLINDER	DTC	ECM/PCM TERMINAL	WIRE COLOR
No. 1	P0351	C15	YEL/GRN
No. 2	P0352	C16	BLU/RED
No. 3	P0353	C17	WHT/BLU
No. 4	P0354	C18	BRN

IGNITION COIL 3P CONNECTOR

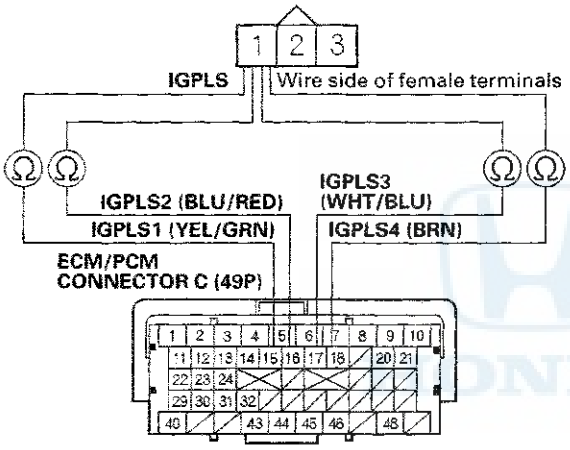

Terminal side of female terminals

Is there continuity?

YES—Go to step 31.

NO—Repair open in the wire between the ECM/PCM and the ignition coil, then go to step 25.

25. Turn the ignition switch to LOCK (0).

26. Reconnect all connectors.

27. Turn the ignition switch to ON (II).

28. Reset the ECM/PCM with the HDS.

29. Do the ECM/PCM idle learn procedure (see page 11-317).

30. Check for Temporary DTCs or DTCs with the HDS.

Is DTC P0351, P0352, P0353, and/or P0354 indicated?

YES—Check for poor connections or loose terminals at the ignition coil and the ECM/PCM, then go to step 1.

NO—Troubleshooting is complete. If any other Temporary DTCs or DTCs are indicated, go to the indicated DTC's troubleshooting. ■

31. Reconnect all connectors.

32. Update the ECM/PCM if it does not have the latest software (see page 11-215), or substitute a known-good ECM/PCM (see page 11-7).

33. Check for Temporary DTCs or DTCs with the HDS.

Is DTC P0351, P0352, P0353, and/or P0354 indicated?

YES—Check for poor connections or loose terminals at the ignition coil and the ECM/PCM. If the ECM/PCM was updated, substitute a known-good ECM/PCM (see page 11-7), then recheck. If the ECM/PCM was substituted, go to step 1.

NO—If the ECM/PCM was updated, troubleshooting is complete. If the ECM/PCM was substituted, replace the original ECM/PCM (see page 11-216). If any other Temporary DTCs or DTCs are indicated, go to the indicated DTC's troubleshooting. ■

DTC Troubleshooting (cont'd)

DTC P0365: CMP Sensor B Circuit No Signal

NOTE: Before you troubleshoot, record all freeze data and any on-board snapshot, and review the general troubleshooting information (see page 11-3).

1. Turn the ignition switch to ON (II).
2. Clear the DTC with the HDS.
3. Start the engine.
4. Check for Temporary DTCs or DTCs with the HDS.

   Is DTC P0365 indicated?

   YES—Go to step 5.

   NO—Intermittent failure, the system is OK at this time. Check for poor connections or loose terminals at CMP sensor B and the ECM/PCM. ■
5. Turn the ignition switch to LOCK (0).
6. Disconnect the CMP sensor B 3P connector.
7. Turn the ignition switch to ON (II).
8. Measure the voltage between CMP sensor B 3P connector terminal No. 3 and body ground.

CMP SENSOR B 3P CONNECTOR

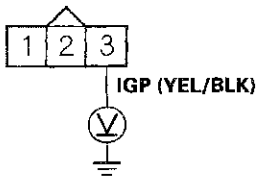

Wire side of female terminals

Is there battery voltage?

YES—Go to step 9.

NO—Repair open in the wire between CMP sensor B and PGM-FI main relay 1, then go to step 18.

9. Measure the voltage between CMP sensor B 3P connector terminal No. 1 and body ground.

CMP SENSOR B 3P CONNECTOR

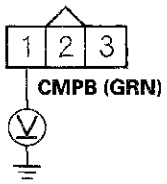

Wire side of female terminals

Is there about 5 V?

YES—Go to step 10.

NO—Go to step 11.

10. Measure the voltage between CMP sensor 3P connector terminals No. 2 and No. 3.

CMP SENSOR B 3P CONNECTOR

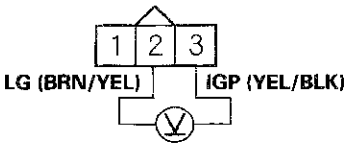

Wire side of female terminals

Is there battery voltage?

YES—Go to step 16.

NO—Repair open in the wire between CMP sensor B and G101 (see page 22-20), then go to step 18.

11. Turn the ignition switch to LOCK (0).

12. Jump the SCS line with the HDS.

13. Disconnect ECM/PCM connector C (49P).

14. Check for continuity between ECM/PCM connector terminal C31 and body ground.

ECM/PCM CONNECTOR C (49P)

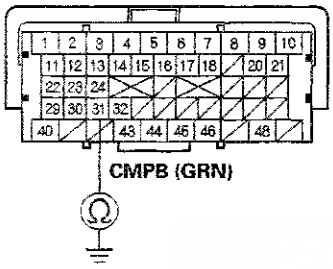

Terminal side of female terminals

Is there continuity?

YES—Repair short in the wire between the ECM/PCM (C31) and CMP sensor B, then go to step 18.

NO—Go to step 15.

15. Check for continuity between CMP sensor B 3P connector terminal No. 1 and ECM/PCM connector terminal C31.

CMP SENSOR B 3P CONNECTOR

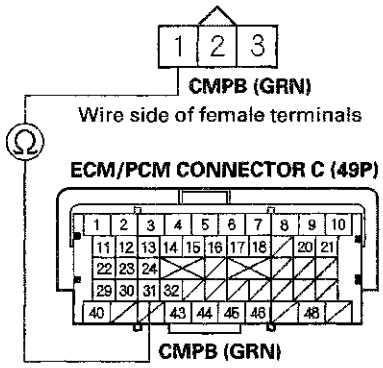

Terminal side of female terminals

Is there continuity?

YES—Go to step 23.

NO—Repair open in the wire between the ECM/PCM (C31) and CMP sensor B, then go to step 18.

(cont'd)

DTC Troubleshooting (cont'd)

16. Turn the ignition switch to LOCK (0).

17. Replace CMP sensor B (see page 11-210).

18. Reconnect all connectors.

19. Turn the ignition switch to ON (II).

20. Reset the ECM/PCM with the HDS.

21. Do the ECM/PCM idle learn procedure (see page 11-317).

22. Check for Temporary DTCs or DTCs with the HDS.

    Is DTC P0365 indicated?

    YES—Check for poor connections or loose terminals at CMP sensor B and the ECM/PCM, then go to step 1.

    NO—Troubleshooting is complete. If any other Temporary DTCs or DTCs are indicated, go to the indicated DTC's troubleshooting.

23. Reconnect all connectors.

24. Update the ECM/PCM if it does not have the latest software (see page 11-215), or substitute a known-good ECM/PCM (see page 11-7).

25. Check for Temporary DTCs or DTCs with the HDS.

    Is DTC P0365 indicated?

    YES—Check for poor connections or loose terminals at CMP sensor B and the ECM/PCM. If the ECM/PCM was updated, substitute a known-good ECM/PCM (see page 11-7), then recheck. If the ECM/PCM was substituted, go to step 1.

    NO—If the ECM/PCM was updated, troubleshooting is complete. If the ECM/PCM was substituted, replace the original ECM/PCM (see page 11-216). If any other Temporary DTCs or DTCs are indicated, go to the indicated DTC's troubleshooting.■

DTC P0369: CMP Sensor B Circuit Intermittent Interruption

NOTE: Before you troubleshoot, record all freeze data and any on-board snapshot, and review the general troubleshooting information (see page 11-3).

1. Turn the ignition switch to ON (II).

2. Clear the DTC with the HDS.

3. Start the engine, and let it idle for 10 seconds.

4. Check the CMP B NOISE in the DATA LIST with the HDS.

   Are 0 counts indicated?

   YES—Go to step 7.

   NO—Go to step 5.

5. Test-drive the vehicle for several minutes in the range of these recorded freeze data parameters:

   - ENGINE SPEED
   - VSS

6. Check the CMP B NOISE in the DATA LIST with the HDS.

   Are 0 counts indicated?

   YES—Go to step 7.

   NO—Intermittent failure, the system is OK at this time. Check for poor connections or loose terminals at CMP sensor B and the ECM/PCM.■

7. Check for poor or loose connections and terminals at these locations:

   - CMP sensor B
   - ECM/PCM
   - Engine ground
   - Body ground

   Are the connections and terminals OK?

   YES—Go to step 8.

   NO—Repair the connectors or terminals, then go to step 11.

8. Check for damage on the CMP sensor B pulser plate (see page 6-30).

   Is the pulser plate damaged?

   YES—Replace the CMP sensor B pulser plate (see page 6-30), then go to step 11.

   NO—Go to step 9.

9. Turn the ignition switch to LOCK (0).

10. Replace CMP sensor B (see page 11-210).

11. Turn the ignition switch to ON (II).

12. Reset the ECM/PCM with the HDS.

13. Do the ECM/PCM idle learn procedure (see page 11-317).

14. Start the engine, and let it idle for 10 seconds.

15. Check for Temporary DTCs or DTCs with the HDS.

    Is DTC P0369 indicated?

    YES—Check for poor connections or loose terminals at CMP sensor B and the ECM/PCM, then go to step 1.

    NO—Troubleshooting is complete. If any other Temporary DTCs or DTCs are indicated, go to the indicated DTC's troubleshooting.■

DTC P050A: Cold Start Idle Air Control System Performance Problem

NOTE: Before you troubleshoot, record all freeze data and any on-board snapshot, and review the general troubleshooting information (see page 11-3).

1. Turn the ignition switch to ON (II).

2. Check for Temporary DTCs or DTCs with the HDS.

   Are any Temporary DTCs or DTCs other than P050A indicated?

   YES—Go to the indicated DTC's troubleshooting.■

   NO—Go to step 3.

3. Check for poor connections or blockage at the intake air duct.

   Is it OK?

   YES—Go to step 4.

   NO—Reconnect or repair the intake air duct, then go to step 20.

4. Check for damage at the air cleaner housing.

   Is it OK?

   YES—Go to step 5.

   NO—Replace the air cleaner housing (see page 11-359), then go to step 20.

5. Check for dirt or debris in the air cleaner element.

   Is it dirty?

   YES—Replace the air cleaner element or remove the debris (see page 11-360), then go to step 20.

   NO—Go to step 6.

(cont'd)

DTC Troubleshooting (cont'd)

6. Let the engine cool until the value of ECT SENSOR 1 is 122 °F (50 °C) or less.

7. Clear the DTC with the HDS.

8. Start the engine, and let it idle for 10 seconds or more.

9. Monitor the OBD STATUS for DTC P050A in the DTCs MENU with the HDS.

   Does the screen indicate FAILED?

   YES—Go to step 10.

   NO—If the screen indicates PASSED, intermittent failure, the system is OK at this time. Check for poor connections or loose terminals at the throttle body, the MAF sensor/IAT sensor, and the ECM/PCM. If the screen indicates EXECUTING, keep idling until a result comes on. If the screen indicates OUT OF CONDITION or NOT COMPLETED, go to step 6.

10. Do the ETCS TEST in the INSPECTION MENU with the HDS.

    Is the THROTTLE ACTUATOR CONTROL VALVE normal?

    YES—Go to step 11.

    NO—Replace the throttle body (see page 11-362), then go to step 20.

11. Start the engine. Hold the engine speed at 3,000 rpm without load (A/T in P or N, M/T in neutral) until the radiator fan comes on, then let it idle.

12. Monitor the ENGINE SPEED in the DATA LIST with the HDS, and hold the engine speed at 2,500 rpm for at least 30 seconds.

13. While holding the engine speed at 2,500 rpm, check the MAF SENSOR in the DATA LIST with the HDS.

    Is there about 5.6—7.8 gm/s (M/T) or 6.5—9.1 gm/s (A/T)?

    YES—Go to step 14.

    NO—Replace the MAF sensor/IAT sensor (see page 11-211), then go to step 20.

14. Turn the ignition switch to LOCK (0).

15. Allow the engine to cool to ambient temperature.

16. Note the ambient temperature.

17. Turn the ignition switch to ON (II).

18. Note the value of IAT SENSOR quickly in the DATA LIST with the HDS.

19. Compare the value of the IAT SENSOR and the ambient temperature.

    Does the value of the IAT SENSOR differ 5.4 °F (3 °C) or more?

    YES—Replace the MAF sensor/IAT sensor (see page 11-211), then go to step 20.

    NO—Check for dirt, carbon, or damage in the throttle bore. If there is dirt or carbon, clean the throttle body (see page 11-359), then go to step 20. If there is damage in the throttle bore, replace the throttle body (see page 11-362), then go to step 20.

20. Turn the ignition switch to ON (II).

21. Reset the ECM/PCM with the HDS.

22. Do the ECM/PCM idle learn procedure (see page 11-317).

23. Let the engine cool until the value of ECT SENSOR 1 is 122 °F (50 °C) or less.

24. Start the engine, and let it idle for 10 seconds or more.

25. Check for Temporary DTCs or DTCs with the HDS.

    Is DTC P050A indicated?

    YES—Check for poor connections or loose terminals at the throttle body, the MAF sensor/IAT sensor, and the ECM/PCM, then go to step 1.

    NO—Go to step 26.

26. Monitor the OBD STATUS for DTC P050A in the DTCs MENU with the HDS.

    Does the screen indicate PASSED?

    YES—Troubleshooting is complete. If any other Temporary DTCs or DTCs were indicated in step 25, go to the indicated DTC's troubleshooting.■

    NO—If the screen indicates FAILED, check for poor connections or loose terminals at the throttle body, the MAF sensor/IAT sensor, and the ECM/PCM, then go to step 1. If the screen indicates EXECUTING, keep idling until a result comes on. If the screen indicates OUT OF CONDITION or NOT COMPLETED, go to step 23.

DTC P050B: Cold Start Ignition Timing Control System Performance Problem

NOTE: Before you troubleshoot, record all freeze data and any on-board snapshot, and review the general troubleshooting information (see page 11-3).

1. Turn the ignition switch to ON (II).

2. Check for Temporary DTCs or DTCs with the HDS.

   Are any Temporary DTCs or DTCs other than P050B indicated?

   YES—Go to the indicated DTC's troubleshooting.■

   NO—Go to step 3.

3. Check for poor connections or a blockage at the intake air duct.

   Is it OK?

   YES—Go to step 4.

   NO—Reconnect or repair the intake air duct, then go to step 25.

4. Check for damage at the air cleaner housing.

   Is it OK?

   YES—Go to step 5.

   NO—Replace the air cleaner housing (see page 11-359), then go to step 25.

5. Check for dirt or debris in the air cleaner element.

   Is it dirty?

   YES—Replace the air cleaner element or remove the debris (see page 11-360), then go to step 25.

   NO—Go to step 6.

(cont'd)

DTC Troubleshooting (cont'd)

6. Let the engine cool until the value of ECT SENSOR 1 is 122 °F (50 °C) or less.

7. Clear the DTC with the HDS.

8. Start the engine, and let it idle for 10 seconds or more.

9. Monitor the OBD STATUS for DTC P050B in the DTCs MENU with the HDS.

   Does the screen indicate FAILED?

   YES—Go to step 10.

   NO—If the screen indicates PASSED, intermittent failure, the system is OK at this time. Check for poor connections or loose terminals at the CKP sensor, the throttle body, the MAF sensor/IAT sensor, ECT sensor 1, ECT sensor 2, and the ECM/PCM. If the screen indicates EXECUTING, keep idling until a result comes on. If the screen indicates OUT OF CONDITION or NOT COMPLETED, go to step 6.

10. Inspect the ignition timing (see page 4-19).

    Is the ignition timing OK?

    YES—Go to step 12.

    NO—Go to step 11.

11. Check for damage at the CKP sensor (see page 11-210) and the CKP sensor pulser plate (see page 7-30).

    Is the CKP sensor and/or the CKP sensor pulser plate damaged?

    YES—Replace the CKP sensor (see page 11-210) and/or the CKP sensor pulser plate (see page 7-30), then go to step 6.

    NO—Go to step 32.

12. Do the ETCS TEST in the INSPECTION MENU with the HDS.

    Is the THROTTLE ACTUATOR CONTROL VALVE normal?

    YES—Go to step 13.

    NO—Replace the throttle body (see page 11-362), then go to step 25.

13. Start the engine. Hold the engine speed at 3,000 rpm without load (A/T in P or N, M/T in neutral) until the radiator fan comes on, then let it idle.

14. Monitor the ENGINE SPEED in the DATA LIST with the HDS, and hold the engine speed at 2,500 rpm for at least 30 seconds.

15. While holding the engine speed at 2,500 rpm, check the MAF SENSOR in the DATA LIST with the HDS.

    Is there about 5.6—7.8 gm/s (M/T) or 6.5—9.1 gm/s (A/T)?

    YES—Go to step 16.

    NO—Replace the MAF sensor/IAT sensor (see page 11-211), then go to step 25.

16. Turn the ignition switch to LOCK (0).

17. Drain the coolant (see page 10-6).

18. Remove ECT sensor 1 (see page 11-212), and ECT sensor 2 (see page 11-212).

19. Allow the sensors to cool to ambient temperature.

20. Note the ambient temperature.

21. Connect ECT sensor 1 and ECT sensor 2 to their 2P connectors, but do not install them.

22. Turn the ignition switch to ON (II).

23. Note the value of ECT SENSOR 1 and ECT SENSOR 2 quickly in the DATA LIST with the HDS.

24. Compare the value of ECT SENSOR 1 and the ambient temperature, and the value of ECT SENSOR 2 and the ambient temperature individually.

Does either sensor differ more than 5.4 °F (3 °C) from the ambient temperature?

YES—Replace the sensor that differed more than 5.4 °F (3 °C) from the ambient temperature, then go to step 25.

NO—Check and repair any problems with the following items. Repair or replace them if needed, then go to step 25. If all of the items are OK, go to step 32.

- Engine compression and cylinder leakdown
- VTEC system
- Engine oil
- A/C system
- Power steering

25. Turn the ignition switch to ON (II).

26. Reset the ECM/PCM with the HDS.

27. Do the ECM/PCM idle learn procedure (see page 11-317).

28. Let the engine cool until the value of ECT SENSOR 1 is 122 °F (50 °C) or less.

29. Start the engine, and let it idle for 10 seconds or more.

30. Check for Temporary DTCs or DTCs with the HDS.

Is DTC P050B indicated?

YES—Check for poor connections or loose terminals at the CKP sensor, the throttle body, the MAF sensor/IAT sensor, ECT sensor 1, ECT sensor 2, and the ECM/PCM, then go to step 1.

NO—Go to step 31.

31. Monitor the OBD STATUS for DTC P050B in the DTCs MENU with the HDS.

Does the screen indicate PASSED?

YES—Troubleshooting is complete. If any other Temporary DTCs or DTCs were indicated in step 30, go to the indicated DTC's troubleshooting. ■

NO—If the screen indicates FAILED, check for poor connections or loose terminals at the CKP sensor, the throttle body, the MAF sensor/IAT sensor, ECT sensor 1, ECT sensor 2, and the ECM/PCM, then go to step 1. If the screen indicates EXECUTING, keep idling until a result comes on. If the screen indicates OUT OF CONDITION or NOT COMPLETED, go to step 28.

32. Update the ECM/PCM if it does not have the latest software (see page 11-215), or substitute a known-good ECM/PCM (see page 11-7).

33. Do the ECM/PCM idle learn procedure (see page 11-317).

34. Let the engine cool until the value of ECT SENSOR 1 is 122 °F (50 °C) or less.

35. Start the engine, and let it idle for 10 seconds or more.

36. Check for Temporary DTCs or DTCs with the HDS.

Is DTC P050B indicated?

YES—Check for poor connections or loose terminals at the CKP sensor, the throttle body, the MAF sensor/IAT sensor, ECT sensor 1, ECT sensor 2, and the ECM/PCM. If the ECM/PCM was updated, substitute a known-good ECM/PCM (see page 11-7), then go to step 34. If the ECM/PCM was substituted, go to step 1.

NO—Go to step 37.

(cont'd)

DTC Troubleshooting (cont'd)

37. Monitor the OBD STATUS for DTC P050B in the DTCs MENU with the HDS.

    Does the screen indicate PASSED?

    YES—If the ECM/PCM was updated, troubleshooting is complete. If the ECM/PCM was substituted, replace the original ECM/PCM (see page 11-216). If any other Temporary DTCs or DTCs were indicated in step 36, go to the indicated DTC's troubleshooting. ■

    NO—If the screen indicates FAILED, check for poor connections or loose terminals at the CKP sensor, the throttle body, the MAF sensor/IAT sensor, ECT sensor 1, ECT sensor 2, and the ECM/PCM. If the ECM/PCM was updated, substitute a known-good ECM/PCM (see page 11-7), then go to step 34. If the ECM/PCM was substituted, go to step 1. If the screen indicates EXECUTING, keep idling until a result comes on. If the screen indicates OUT OF CONDITION or NOT COMPLETED, go to step 34.

DTC P0562: Charging System Low Voltage

NOTE:
- Before you troubleshoot, record all freeze data and any on-board snapshot, and review the general troubleshooting information (see page 11-3).
- If any high current load accessories are installed, this DTC can be set.
- If DTC P16BB and/or P16BC is stored at the same time as DTC P0562, troubleshoot DTC P16BB and/or P16BC first, then recheck for DTC P0562.

1. Turn the ignition switch to ON (II).
2. Clear the DTC with the HDS.
3. Start the engine.
4. Check under these conditions:
   - A/C on
   - Temperature control at maximum cool
   - Blower fan at maximum speed
   - Rear window defogger on
   - Headlights on high beam
5. Hold the engine speed at 2,000 rpm (A/T in P or N, M/T in neutral) for 1 minute.
6. Check for Temporary DTCs or DTCs with the HDS.

   Is DTC P0562 indicated?

   YES—Replace the alternator (see page 4-32), then go to step 7.

   NO—Intermittent failure, the system is OK at this time. Check for poor connections or loose terminals at the alternator and the under-hood fuse/relay box, and check the battery performance (see page 22-88). ■

7. Turn the ignition switch to ON (II).

8. Reset the ECM/PCM with the HDS.

9. Do the ECM/PCM idle learn procedure (see page 11-317).

10. Start the engine.

11. Check under these conditions:

    - A/C on
    - Temperature control at maximum cool
    - Blower fan at maximum speed
    - Rear window defogger on
    - Headlights on high beam

12. Hold the engine speed at 2,000 rpm (A/T in P or N, M/T in neutral) for 1 minute.

13. Check for Temporary DTCs or DTCs with the HDS.

    Is DTC P0562 indicated?

    YES—Check for poor connections or loose terminals at the alternator and the under-hood fuse/relay box, then go to step 1.

    NO—Troubleshooting is complete. If any other Temporary DTCs or DTCs are indicated, go to the indicated DTC's troubleshooting.■

DTC P0563: ECM/PCM Power Source Circuit Unexpected Voltage

NOTE: Before you troubleshoot, record all freeze data and any on-board snapshot, and review the general troubleshooting information (see page 11-3).

1. Turn the ignition switch to ON (II).

2. Clear the DTC with the HDS.

3. Turn the ignition switch to LOCK (0).

4. Wait 10 seconds.

5. Turn the ignition switch to ON (II).

6. Check for Temporary DTCs or DTCs with the HDS.

   Is DTC P0563 indicated?

   YES—Go to step 7.

   NO—Intermittent failure, the system is OK at this time. Check for poor connections or loose terminals at PGM-FI main relay 1 and the ECM/PCM.■

7. Turn the ignition switch to LOCK (0).

8. Jump the SCS line with the HDS.

9. Disconnect ECM/PCM connector A (49P).

(cont'd)

DTC Troubleshooting (cont'd)

10. Measure the voltage between ECM/PCM connector terminal A7 and body ground.

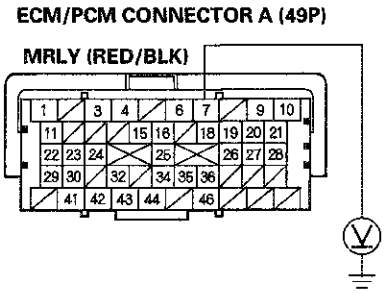

Terminal side of female terminals

Is there battery voltage?

YES—Go to step 13.

NO—Go to step 11.

11. Remove PGM-FI main relay 1 (A) from the under-hood fuse/relay box.

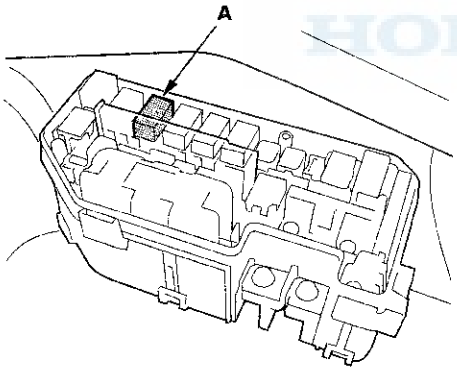

12. Check for continuity between ECM/PCM connector terminal A7 and body ground.

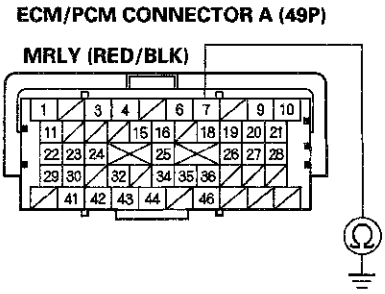

Terminal side of female terminals

Is there continuity?

YES—Repair short in the wire between the ECM/PCM (A7) and PGM-FI main relay 1, then go to step 16.

NO—Go to step 15.

13. Remove PGM-FI main relay 1 (A) from the under-hood fuse/relay box.

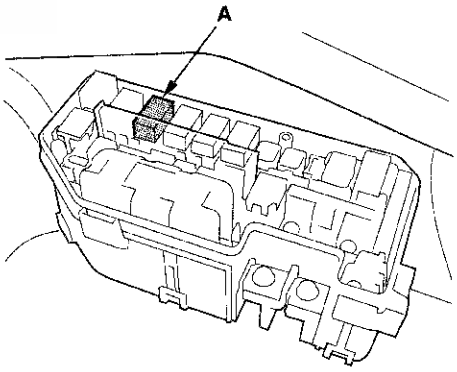

14. Measure the voltage between ECM/PCM connector terminal A9 and body ground.

ECM/PCM CONNECTOR A (49P)

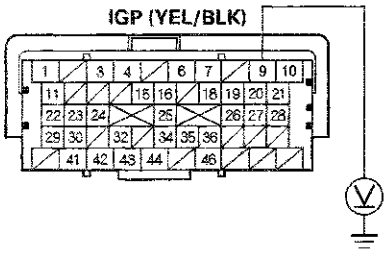

Terminal side of female terminals

Is there battery voltage?

YES—Repair short to power in the wire between the ECM/PCM (A9) and PGM-FI main relay 1, then go to step 16.

NO—Go to step 15.

15. Test PGM-FI main relay 1 (see page 22-91).

Is PGM-FI main relay 1 OK?

YES—Go to step 23.

NO—Replace PGM-FI main relay 1, then go to step 16.

16. Reconnect all connectors.

17. Turn the ignition switch to ON (II).

18. Reset the ECM/PCM with the HDS.

19. Do the ECM/PCM idle learn procedure (see page 11-317).

20. Turn the ignition switch to LOCK (0).

21. Wait 10 seconds.

22. Check for Temporary DTCs or DTCs with the HDS.

Is DTC P0563 indicated?

YES—Check for poor connections or loose terminals at PGM-FI main relay 1 and the ECM/PCM, then go to step 1.

NO—Troubleshooting is complete. If any other Temporary DTCs or DTCs are indicated, go to the indicated DTC's troubleshooting.■

23. Reconnect all connectors.

24. Update the ECM/PCM if it does not have the latest software (see page 11-215), or substitute a known-good ECM/PCM (see page 11-7).

25. Check for Temporary DTCs or DTCs with the HDS.

Is DTC P0563 indicated?

YES—Check for poor connections or loose terminals at PGM-FI main relay 1 and the ECM/PCM. If the ECM/PCM was updated, substitute a known-good ECM/PCM (see page 11-7), then recheck. If the ECM/PCM was substituted, go to step 1.

NO—If the ECM/PCM was updated, troubleshooting is complete. If the ECM/PCM was substituted, replace the original ECM/PCM (see page 11-216). If any other Temporary DTCs or DTCs are indicated, go to the indicated DTC's troubleshooting.■

DTC Troubleshooting (cont'd)

DTC P0602: ECM/PCM Programming Error

NOTE:
- Before you troubleshoot, record all freeze data and any on-board snapshot, and review the general troubleshooting information (see page 11-3).
- This DTC is indicated when an ECM/PCM update is not completed.
- Do not turn the ignition switch to LOCK (0) or ACC (I) while updating the ECM/PCM. If you turn the ignition switch to LOCK (0) or ACC (I) before completion, the ECM/PCM can be damaged.

1. Do the ECM/PCM update procedure (see page 11-215).

2. Check for Temporary DTCs or DTCs with the HDS.

   Is DTC P0602 indicated?

   YES—Replace the original ECM/PCM (see page 11-216).■

   NO—Update is complete. If any other Temporary DTCs or DTCs are indicated, go to the indicated DTC's troubleshooting.■

DTC P0606: ECM/PCM Processor Malfunction

NOTE: Before you troubleshoot, record all freeze data and any on-board snapshot, and review the general troubleshooting information (see page 11-3).

1. Turn the ignition switch to ON (II).

2. Clear the DTC with the HDS.

3. Turn the ignition switch to LOCK (0).

4. Turn the ignition switch to ON (II).

5. Wait 40 seconds.

6. Check for Temporary DTCs or DTCs with the HDS.

   Is DTC P0606 indicated?

   YES—Go to step 7.

   NO—Intermittent failure, the system is OK at this time.■

7. Update the ECM/PCM if it does not have the latest software (see page 11-215), or substitute a known-good ECM/PCM (see page 11-7).

8. Turn the ignition switch to LOCK (0).

9. Turn the ignition switch to ON (II).

10. Wait 40 seconds.

11. Check for Temporary DTCs or DTCs with the HDS.

    Is DTC P0606 indicated?

    YES—If the ECM/PCM was updated, substitute a known-good ECM/PCM (see page 11-7), then go to step 8. If the ECM/PCM was substituted, go to step 1.

    NO—If the ECM/PCM was updated, troubleshooting is complete. If the ECM/PCM was substituted, replace the original ECM/PCM (see page 11-216). If any other Temporary DTCs or DTCs are indicated, go to the indicated DTC's troubleshooting.■

DTC P060A: PCM (A/T system) Internal Control Module Malfunction

NOTE: Before you troubleshoot, record all freeze data and any on-board snapshot, and review the general troubleshooting information (see page 11-3).

1. Turn the ignition switch to ON (II).
2. Clear the DTC with the HDS.
3. Check for Temporary DTCs or DTCs with the HDS.

   Is DTC P060A indicated?

   YES—Go to step 4.

   NO—Intermittent failure, the system is OK at this time.■

4. Update the PCM if it does not have the latest software (see page 11-215), or substitute a known-good PCM (see page 11-7).
5. Check for Temporary DTCs or DTCs with the HDS.

   Is DTC P060A indicated?

   YES—If the PCM was updated, substitute a known-good PCM (see page 11-7), then recheck. If the PCM was substituted, go to step 1.

   NO—If the PCM was updated, troubleshooting is complete. If the PCM was substituted, replace the original PCM (see page 11-216). If any other Temporary DTCs or DTCs are indicated, go to the indicated DTC's troubleshooting.■

DTC P062F: ECM/PCM Internal Control Module Keep Alive Memory (KAM) Error

NOTE: Before you troubleshoot, record all freeze data and any on-board snapshot, and review the general troubleshooting information (see page 11-3).

1. Turn the ignition switch to ON (II).
2. Clear the DTC with the HDS.
3. Check for Temporary DTCs or DTCs with the HDS.

   Is DTC P062F indicated?

   YES—Go to step 4.

   NO—Intermittent failure, the system is OK at this time.■

4. Update the ECM/PCM if it does not have the latest software (see page 11-215), or substitute a known-good ECM/PCM (see page 11-7).
5. Check for Temporary DTCs or DTCs with the HDS.

   Is DTC P062F indicated?

   YES—If the ECM/PCM was updated, substitute a known-good ECM/PCM (see page 11-7), then recheck. If the ECM/PCM was substituted, go to step 1.

   NO—If the ECM/PCM was updated, troubleshooting is complete. If the ECM/PCM was substituted, replace the original ECM/PCM (see page 11-216). If any other Temporary DTCs or DTCs are indicated, go to the indicated DTC's troubleshooting.■

DTC Troubleshooting (cont'd)

DTC P0630: VIN Not Programmed or Mismatch

NOTE:
- Before you troubleshoot, record all freeze data and any on-board snapshot, and review the general troubleshooting information (see page 11-3).
- This DTC is stored only when the ECM/PCM does not have the VIN information of the vehicle. Use the HDS to input the missing VIN information.

1. Turn the ignition switch to ON (II).

2. Check the VIN with the HDS.

   Does the HDS show the vehicle's VIN?

   YES—Go to step 5.

   NO—Go to step 3.

3. Input the VIN to the ECM/PCM with the HDS.

   Does the screen show COMPLETE?

   YES—Go to step 5.

   NO—Go to step 4.

4. Check for DTCs with the HDS.

   Is DTC P062F indicated?

   YES—Go to the DTC P062F troubleshooting (see page 11-139). ■

   NO—Go to step 9.

5. Clear the DTC with the HDS.

6. Turn the ignition switch to LOCK (0).

7. Turn the ignition switch to ON (II), and wait 5 seconds.

8. Check for Temporary DTCs or DTCs with the HDS.

   Is DTC P0630 indicated?

   YES—Go to step 9.

   NO—Intermittent failure, the system is OK at this time. ■

9. Update the ECM/PCM if it does not have the latest software (see page 11-215), or substitute a known-good ECM/PCM (see page 11-7).

10. Check for Temporary DTCs or DTCs with the HDS.

    Is DTC P0630 indicated?

    YES—If the ECM/PCM was updated, substitute a known-good ECM/PCM (see page 11-7), then recheck. If the ECM/PCM was substituted, go to step 1.

    NO—If the ECM/PCM was updated, troubleshooting is complete. If the ECM/PCM was substituted, replace the original ECM/PCM (see page 11-216). If any other Temporary DTCs or DTCs are indicated, go to the indicated DTC's troubleshooting. ■

DTC P0685: ECM/PCM Power Control Circuit/ Internal Circuit Malfunction

NOTE:
- Before you troubleshoot, record all freeze data and any on-board snapshot, and review the general troubleshooting information (see page 11-3).
- If the problem doesn't return after you clear the DTC, or it this DTC is stored intermittently, check for loose terminals at the IGP line connectors before replacing the ECM/PCM.

1. Turn the ignition switch to ON (II).
2. Clear the DTC with the HDS.
3. Start the engine, and let it idle for 30 seconds.
4. Turn the ignition switch to LOCK (0).
5. Start the engine, and let it idle for 30 seconds.
6. Turn the ignition switch to LOCK (0).
7. Turn the ignition switch to ON (II).
8. Check for Temporary DTCs or DTCs with the HDS.

   Is DTC P0685 indicated?

   YES—Go to step 9.

   NO—Intermittent failure, the system is OK at this time.■

9. Update the ECM/PCM if it does not have the latest software (see page 11-215), or substitute a known-good ECM/PCM (see page 11-7).
10. Start the engine, and let it idle for 30 seconds.
11. Turn the ignition switch to LOCK (0).
12. Start the engine, and let it idle for 30 seconds.
13. Turn the ignition switch to LOCK (0).
14. Turn the ignition switch to ON (II).
15. Check for Temporary DTCs or DTCs with the HDS.

    Is DTC P0685 indicated?

    YES—If the ECM/PCM was updated, substitute a known-good ECM/PCM (see page 11-7), then go to step 10. If the ECM/PCM was substituted, go to step 1.

    NO—If the ECM/PCM was updated, troubleshooting is complete. If the ECM/PCM was substituted, replace the original ECM/PCM (see page 11-216). If any other Temporary DTCs or DTCs are indicated, go to the indicated DTC's troubleshooting.■

DTC Troubleshooting (cont'd)

DTC P0720: Output Shaft (Countershaft) Speed Sensor Circuit Malfunction

NOTE: Before you troubleshoot, record all freeze data and any on-board snapshot, and review the general troubleshooting information (see page 11-3).

1. Start the engine. Hold the engine speed at 3,000 rpm without load (in neutral) until the radiator fan comes on, then let it idle.

2. Test-drive several minutes.

3. Check the C SHAFT SPD in the DATA LIST with the HDS.

   Is any vehicle speed indicated?

   YES—Intermittent failure, the system is OK at this time. Check for poor connections or loose terminals at the output shaft (countershaft) speed sensor and the ECM.■

   NO—Go to step 4.

4. Turn the ignition switch to LOCK (0).

5. Disconnect the output shaft (countershaft) speed sensor 3P connector.

6. Turn the ignition switch to ON (II).

7. Measure the voltage between output shaft (countershaft) speed sensor 3P connector terminal No. 1 and body ground.

OUTPUT SHAFT (COUNTERSHAFT) SPEED SENSOR 3P CONNECTOR

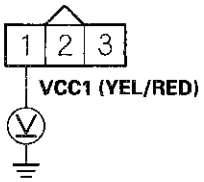

Wire side of female terminals

Is there about 5 V?

YES—Go to step 8.

NO—Repair open in the wire between the ECM (C13) and the output shaft (countershaft) speed sensor, then go to step 18.

8. Measure the voltage between output shaft (countershaft) speed sensor 3P connector terminal No. 2 and body ground.

OUTPUT SHAFT (COUNTERSHAFT) SPEED SENSOR 3P CONNECTOR

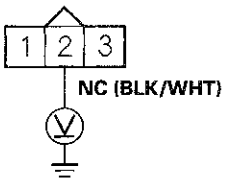

Wire side of female terminals

Is there about 5 V?

YES—Go to step 9.

NO—Go to step 10.

9. Measure the voltage between output shaft (countershaft) speed sensor 3P connector terminals No. 1 and No. 3.

OUTPUT SHAFT (COUNTERSHAFT) SPEED SENSOR 3P CONNECTOR

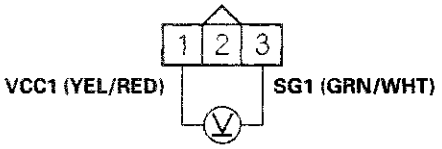

Wire side of female terminals

Is there about 5 V?

YES—Go to step 16.

NO—Repair open in the wire between the ECM (C14) and the output shaft (countershaft) speed sensor, then go to step 18.

10. Turn the ignition switch to LOCK (0).

11. Jump the SCS line with the HDS.

12. Disconnect ECM connector B (49P).

13. Check for continuity between ECM connector terminal B38 and body ground.

ECM CONNECTOR B (49P)

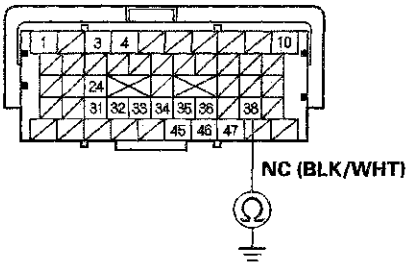

Terminal side of female terminals

Is there continuity?

YES—Repair short in the wire between the ECM (B38) and the output shaft (countershaft) speed sensor, then go to step 18.

NO—Go to step 14.

14. Connect output shaft (countershaft) speed sensor 3P connector terminal No. 2 to body ground with a jumper wire.

OUTPUT SHAFT (COUNTERSHAFT) SPEED SENSOR 3P CONNECTOR

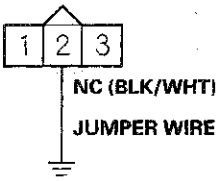

Wire side of female terminals

(cont'd)

DTC Troubleshooting (cont'd)

15. Check for continuity between ECM connector terminal B38 and body ground.

ECM CONNECTOR B (49P)

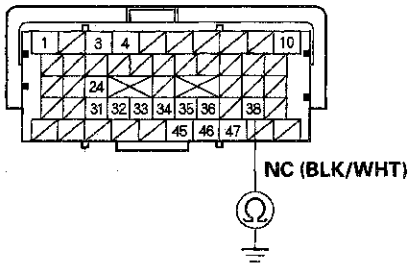

Terminal side of female terminals

Is there continuity?

YES—Go to step 25.

NO—Repair open in the wire between the ECM (B38) and the output shaft (countershaft) speed sensor, then go to step 18.

16. Turn the ignition switch to LOCK (0).

17. Replace the output shaft (countershaft) speed sensor (see page 11-213).

18. Reconnect all connectors.

19. Turn the ignition switch to ON (II).

20. Reset the ECM with the HDS.

21. Do the ECM idle learn procedure (see page 11-317).

22. Test-drive under these conditions:

- Engine coolant temperature (ECT SENSOR 1) above 176 °F (80 °C)
- Transmission in 5th
- Engine speed between 2,000—3,000 rpm
- Drive for several minutes, then decelerate (with the throttle fully closed) for 8 seconds

23. Check for Temporary DTCs or DTCs with the HDS.

Is DTC P0720 indicated?

YES—Check for poor connections or loose terminals at the output shaft (countershaft) speed sensor and the ECM, then go to step 1.

NO—Go to step 24.

24. Monitor the OBD STATUS for DTC P0720 in the DTCs MENU with the HDS.

Does the screen indicate PASSED?

YES—Troubleshooting is complete. If any other Temporary DTCs or DTCs were indicated in step 23, go to the indicated DTC's troubleshooting. ■

NO—If the screen indicates FAILED, check for poor connections or loose terminals at the output shaft (countershaft) speed sensor and the ECM, then go to step 1. If the screen indicates NOT COMPLETED, go to step 22.

25. Reconnect all connectors.

26. Update the ECM if it does not have the latest software (see page 11-215), or substitute a known-good ECM (see page 11-7).

27. Test-drive under these conditions:

- Engine coolant temperature (ECT SENSOR 1) above 176 °F (80 °C)
- Transmission in 5th
- Engine speed between 2,000—3,000 rpm
- Drive for several minutes, then decelerate (with the throttle fully closed) for 8 seconds

28. Check for Temporary DTCs or DTCs with the HDS.

    Is DTC P0720 indicated?

    YES—Check for poor connections or loose terminals at the output shaft (countershaft) speed sensor and the ECM. If the ECM was updated, substitute a known-good ECM (see page 11-7), then go to step 27. If the ECM was substituted, go to step 1.

    NO—Go to step 29.

29. Monitor the OBD STATUS for DTC P0720 in the DTCs MENU with the HDS.

    Does the screen indicate PASSED?

    YES—If the ECM was updated, troubleshooting is complete. If the ECM was substituted, replace the original ECM (see page 11-216). If any other Temporary DTCs or DTCs were indicated in step 28, go to the indicated DTC's troubleshooting. ■

    NO—If the screen indicates FAILED, check for poor connections or loose terminals at the output shaft (countershaft) speed sensor and the ECM. If the ECM was updated, substitute a known-good ECM (see page 11-7), then go to step 27. If the ECM was substituted, go to step 1. If the screen indicates NOT COMPLETED, go to step 27.

DTC P1109: BARO Sensor Circuit Out of Range High

NOTE: Before you troubleshoot, record all freeze data and any on-board snapshot, and review the general troubleshooting information (see page 11-3).

1. Reset the ECM/PCM with the HDS.

2. Start the engine.

3. Check for Temporary DTCs or DTCs with the HDS.

   Is DTC P1109 indicated?

   YES—Go to step 4.

   NO—Intermittent failure, the system is OK at this time. ■

4. Update the ECM/PCM if it does not have the latest software (see page 11-215), or substitute a known-good ECM/PCM (see page 11-7).

5. Check for Temporary DTCs or DTCs with the HDS.

   Is DTC P1109 indicated?

   YES—If the ECM/PCM was updated, substitute a known-good ECM/PCM (see page 11-7), then recheck. If the ECM/PCM was substituted, go to step 1.

   NO—If the ECM/PCM was updated, troubleshooting is complete. If the ECM/PCM was substituted, replace the original ECM/PCM (see page 11-216). If any other Temporary DTCs or DTCs are indicated, go to the indicated DTC's troubleshooting. ■

DTC Troubleshooting (cont'd)

DTC P1116: ECT Sensor 1 Circuit Range/ Performance Problem

NOTE:
- Before you troubleshoot, record all freeze data and any on-board snapshot, and review the general troubleshooting information (see page 11-3).
- If DTC P0111 is stored at the same time as DTC P1116, troubleshoot DTC P0111 first, then recheck for DTC P1116.

1. Check for poor connections or loose terminals at ECT sensor 1 and ECT sensor 2.

   Are the connections and terminals OK?

   YES—Go to step 2.

   NO—Repair the connectors or terminals, then go to step 27.

2. Turn the ignition switch to ON (II).

3. Check for Temporary DTCs or DTCs with the HDS.

   Are DTC P1116 and P2183 indicated at the same time?

   YES—Go to step 15.

   NO—Go to step 4.

4. Start the engine, and let it idle for 10 minutes.

5. Check ECT SENSOR 1 in the DATA LIST with the HDS.

   Is about 113 °F (45 °C) or less indicated?

   YES—Replace ECT sensor 1 (see page 11-212), then go to step 27.

   NO—Go to step 6.

6. Turn the ignition switch to LOCK (0).

7. Drain the coolant (see page 10-6).

8. Remove ECT sensor 1 (see page 11-212).

9. Allow ECT sensor 1 to cool to ambient temperature.

10. Note the ambient temperature.

11. Connect ECT sensor 1 to its 2P connector, but do not install it.

12. Turn the ignition switch to ON (II).

13. Note the value of ECT SENSOR 1 quickly in the DATA LIST with the HDS.

14. Compare the value of ECT SENSOR 1 and the ambient temperature.

    Does the value of ECT SENSOR 1 differ 5.4 °F (3 °C) or more from the ambient temperature?

    YES—Replace ECT sensor 1 (see page 11-212), then go to step 27.

    NO—Intermittent failure, the system is OK at this time. Check for poor connections or loose terminals at ECT sensor 1, ECT sensor 2, and the ECM/PCM. ■

15. Start the engine, and let it idle for 10 minutes.

16. Check ECT SENSOR 1 in the DATA LIST with the HDS.

    Is about 113 °F (45 °C) or less indicated?

    YES—Replace ECT sensor 1 (see page 11-212), then go to step 27.

    NO—Go to step 17.

17. Let the engine idle 10 minutes.

18. Check ECT SENSOR 2 in the DATA LIST with the HDS.

    Is about 113 °F (45 °C) or less indicated?

    YES—Replace ECT sensor 2 (see page 11-212), then go to step 27.

    NO—Go to step 19.

19. Turn the ignition switch to LOCK (0).

20. Drain the coolant (see page 10-6).

21. Remove ECT sensor 1 (see page 11-212) and ECT sensor 2 (see page 11-212).

22. Allow the sensors to cool to ambient temperature.

23. Note the ambient temperature.

24. Connect ECT sensor 1 and ECT sensor 2 to their 2P connectors, but do not install them.

25. Note the value of ECT SENSOR 1 and ECT SENSOR 2 quickly in the DATA LIST with the HDS.

26. Compare the value of ECT SENSOR 1 and the ambient temperature, and the value of ECT SENSOR 2 and the ambient temperature individually.

    Does one of the sensors differ more than 5.4 °F (3 °C) from the ambient temperature?

    YES—Replace the sensor that differed more than 5.4 °F (3 °C) from the ambient temperature, then go to step 27.

    NO—Intermittent failure, the system is OK at this time. Check for poor connections or loose terminals at ECT sensor 1, ECT sensor 2, and the ECM/PCM. ■

27. Turn the ignition switch to ON (II).

28. Reset the ECM/PCM with the HDS.

29. Do the ECM/PCM idle learn procedure (see page 11-317).

30. Check for Temporary DTCs or DTCs with the HDS.

    Is DTC P1116 indicated?

    YES—Check for poor connections or loose terminals at ECT sensor 1, ECT sensor 2, and the ECM/PCM, then go to step 1.

    NO—Troubleshooting is complete. If any other Temporary DTCs or DTCs are indicated, go to the indicated DTC's troubleshooting. ■

DTC Troubleshooting (cont'd)

DTC P1128: MAP Sensor Signal Lower Than Expected

NOTE:
- Before you troubleshoot, record all freeze data and any on-board snapshot, and review the general troubleshooting information (see page 11-3).
- Before you begin check for poor connections or blockage at the intake air duct.

1. Turn the ignition switch to ON (II).

2. Check the MAP SENSOR in the DATA LIST with the HDS.

   Is less than 54.1 kPa (16.0 in.Hg, 406 mmHg), or 1.61 V held for more than 5 seconds?

   YES—Go to step 7.

   NO—Go to step 3.

3. Clear the DTC with the HDS.

4. Start the engine. Hold the engine speed at 3,000 rpm without load (A/T in P or N, M/T in neutral) until the radiator fan comes on, then let it idle.

5. Test-drive under these conditions:

   - Engine coolant temperature (ECT SENSOR 1) above 158 °F (70 °C)
   - Engine speed between 1,400—5,400 rpm
   - A/T in D, M/T in 3rd
   - Vehicle speed accelerated from 16—31 mph (25—50 km/h) under half throttle

6. Monitor the OBD STATUS for DTC P1128 in the DTCs MENU with the HDS.

   Does the screen indicate FAILED?

   YES—Go to step 7.

   NO—If the screen indicates PASSED, intermittent failure, the system is OK at this time. Check for poor connections or loose terminals at the MAP sensor and the ECM/PCM. If the screen indicates NOT COMPLETED, go to step 4 and recheck.

7. Turn the ignition switch to LOCK (0).

8. Replace the MAP sensor (see page 11-211).

9. Turn the ignition switch to ON (II).

10. Reset the ECM/PCM with the HDS.

11. Do the ECM/PCM idle learn procedure (see page 11-317).

12. Start the engine. Hold the engine speed at 3,000 rpm without load (A/T in P or N, M/T in neutral) until the radiator fan comes on, then let it idle.

13. Test-drive under these conditions:

    - Engine coolant temperature (ECT SENSOR 1) above 158 °F (70 °C)
    - Engine speed between 1,400—5,400 rpm
    - A/T in D, M/T in 3rd
    - Vehicle speed accelerated from 16—31 mph (25—50 km/h) under half throttle

14. Check for Temporary DTCs or DTCs with the HDS.

    Is DTC P1128 indicated?

    YES—Check for poor connections or loose terminals at the MAP sensor and the ECM/PCM, then go to step 1.

    NO—Go to step 15.

15. Monitor the OBD STATUS for DTC P1128 in the DTCs MENU with the HDS.

    Does the screen indicate PASSED?

    YES—Troubleshooting is complete. If any other Temporary DTCs or DTCs were indicated in step 14, go to the indicated DTC's troubleshooting. ■

    NO—If the screen indicates FAILED, check for poor connections or loose terminals at the MAP sensor and the ECM/PCM, then go to step 1. If the screen indicates NOT COMPLETED, go to step 12.

DTC P1129: MAP Sensor Signal Higher Than Expected

NOTE: Before you troubleshoot, record all freeze data and any on-board snapshot, and review the general troubleshooting information (see page 11-3).

1. Check for vacuum leaks in these parts:

   - PCV valve
   - PCV hose
   - EVAP canister purge valve
   - Throttle body
   - Intake manifold
   - Brake booster
   - Brake booster hose

   Are there any vacuum leaks?

   YES—Repair or replace parts with vacuum leaks, then go to step 9.

   NO—Go to step 2.

2. Start the engine. Hold the engine speed at 3,000 rpm without load (A/T in P or N, M/T in neutral) until the radiator fan comes on, then let it idle.

3. Check the MAP SENSOR in the DATA LIST with the HDS.

   Is more than 36.9 kPa (11.0 in.Hg, 277 mmHg), or 1.1 V held for more than for 5 seconds?

   YES—Go to step 7.

   NO—Go to step 4.

4. Clear the DTC with the HDS.

5. Test-drive under these conditions:

   - Engine coolant temperature (ECT SENSOR 1) above 158 °F (70 °C)
   - A/T in D, M/T in 5th
   - Drive at a steady speed between 55—75 mph (88—120 km/h) for 10 seconds
   - During the drive, decelerate (with throttle fully closed) for at least 2 seconds

6. Monitor the OBD STATUS for DTC P1129 in the DTCs MENU with the HDS.

   Does the screen indicate FAILED?

   YES—Go to step 7.

   NO—If the screen indicates PASSED, intermittent failure, the system is OK at this time. Check for poor connections or loose terminals at the MAP sensor and the ECM/PCM. If the screen indicates NOT COMPLETED, go to step 5 and recheck.

7. Turn the ignition switch to LOCK (0).

8. Replace the MAP sensor (see page 11-211).

9. Turn the ignition switch to ON (II).

10. Reset the ECM/PCM with the HDS.

11. Do the ECM/PCM idle learn procedure (see page 11-317).

12. Start the engine. Hold the engine speed at 3,000 rpm without load (A/T in P or N, M/T in neutral) until the radiator fan comes on, then let it idle.

(cont'd)

DTC Troubleshooting (cont'd)

13. Test-drive under these conditions:

    - Engine coolant temperature (ECT SENSOR 1) above 158 °F (70 °C)
    - A/T in D, M/T in 5th
    - Drive at a steady speed between 55—75 mph (88—120 km/h) for 10 seconds
    - During the drive, decelerate (with throttle fully closed) for at least 2 seconds

14. Check for Temporary DTCs or DTCs with the HDS.

    Is DTC P1129 indicated?

    YES—Check for poor connections or loose terminals at the MAP sensor and the ECM/PCM, then go to step 1.

    NO—Go to step 15.

15. Monitor the OBD STATUS for DTC P1129 in the DTCs MENU with the HDS.

    Does the screen indicate PASSED?

    YES—Troubleshooting is complete. If any other Temporary DTCs or DTCs were indicated in step 14, go to the indicated DTC's troubleshooting.■

    NO—If the screen indicates FAILED, check for poor connections or loose terminals at the MAP sensor and the ECM/PCM, then go to step 1. If the screen indicates NOT COMPLETED, go to step 12.

DTC P1157: A/F Sensor (Sensor 1) AFS Circuit High Voltage

NOTE: Before you troubleshoot, record all freeze data and any on-board snapshot, and review the general troubleshooting information (see page 11-3).

1. Turn the ignition switch to ON (II).
2. Clear the DTC with the HDS.
3. Start the engine, and wait 1 minute.
4. Check for Temporary DTCs or DTCs with the HDS.

   Is DTC P1157 indicated?

   YES—Go to step 5.

   NO—Intermittent failure, the system is OK at this time. Check for poor connections or loose terminals at the A/F sensor (Sensor 1) and the ECM/PCM.■

5. Turn the ignition switch to LOCK (0).
6. Jump the SCS line with the HDS.
7. Disconnect the A/F sensor (Sensor 1) 4P connector.
8. Disconnect ECM/PCM connector C (49P).

9. Check for continuity between A/F sensor (Sensor 1) 4P connector terminal No. 1 and ECM/PCM connector terminal C29.

A/F SENSOR (SENSOR 1) 4P CONNECTOR

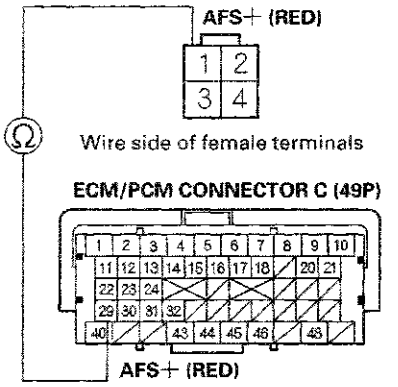

Terminal side of female terminals

Is there continuity?

YES—Go to step 10.

NO—Repair open in the wire between the ECM/PCM (C29) and the A/F sensor (Sensor 1), then go to step 12.

10. Check for continuity between A/F sensor (Sensor 1) 4P connector terminal No. 2 and ECM/PCM connector terminal C30.

A/F SENSOR (SENSOR 1) 4P CONNECTOR

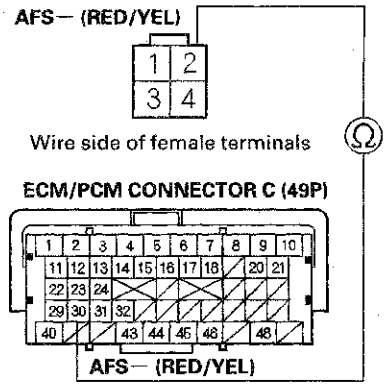

Terminal side of female terminals

Is there continuity?

YES—Go to step 11.

NO—Repair open in the wire between the ECM/PCM (C30) and the A/F sensor (Sensor 1), then go to step 12.

11. Replace the A/F sensor (Sensor 1) (see page 11-209).

12. Reconnect all connectors.

13. Turn the ignition switch to ON (II).

14. Reset the ECM/PCM with the HDS.

15. Do the ECM/PCM idle learn procedure (see page 11-317).

(cont'd)

DTC Troubleshooting (cont'd)

16. Check for Temporary DTCs or DTCs with the HDS.

    Is DTC P1157 indicated?

    YES—Check for poor connections or loose terminals at the A/F sensor (Sensor 1) and the ECM/PCM, then go to step 1. If the connector and terminal fits are OK, go to step 18.

    NO—Go to step 17.

17. Monitor the OBD STATUS for DTC P1157 in the DTCs MENU with the HDS.

    Does the screen indicate PASSED?

    YES—Troubleshooting is complete. If any other Temporary DTCs or DTCs were indicated in step 16, go to the indicated DTC's troubleshooting.■

    NO—If the screen indicates FAILED, check for poor connections or loose terminals at the A/F sensor (Sensor 1) and the ECM/PCM, then go to step 1. If the screen indicates NOT COMPLETED, keep idling until a result comes on.

18. Update the ECM/PCM if it does not have the latest software (see page 11-215), or substitute a known-good ECM/PCM (see page 11-7).

19. Start the engine, and let it idle.

20. Check for Temporary DTCs or DTCs with the HDS.

    Is DTC P1157 indicated?

    YES—If the ECM/PCM was updated, substitute a known-good ECM/PCM (see page 11-7), then go to step 19. If the ECM/PCM was substituted, go to step 1.

    NO—Go to step 21.

21. Monitor the OBD STATUS for DTC P1157 in the DTCs MENU with the HDS.

    Does the screen indicate PASSED?

    YES—If the ECM/PCM was updated, troubleshooting is complete. If the ECM/PCM was substituted, replace the original ECM/PCM (see page 11-216). If any other Temporary DTCs or DTCs were indicated in step 20, go to the indicated DTC's troubleshooting.■

    NO—If the screen indicates FAILED, go to step 1. If the ECM/PCM was updated, substitute a known-good ECM/PCM (see page 11-7), then go to step 19. If the ECM/PCM was substituted, go to step 1. If the screen indicates NOT COMPLETED, keep idling until a result comes on.

DTC P1172: A/F Sensor (Sensor 1) Circuit Out of Range High

NOTE: Before you troubleshoot, record all freeze data and any on-board snapshot, and review the general troubleshooting information (see page 11-3).

1. Turn the ignition switch to ON (II).

2. Clear the DTC with the HDS.

3. Start the engine. Hold the engine speed at 3,000 rpm without load (A/T in P or N, M/T in neutral) until the radiator fan comes on, then let it idle.

4. Monitor the OBD STATUS for DTC P1172 in the DTCs MENU with the HDS.

   Does the screen indicate FAILED?

   YES—Go to step 5.

   NO—If the screen indicates PASSED, intermittent failure, the system is OK at this time. Check for poor connections or loose terminals at the A/F sensor (Sensor 1) and the ECM/PCM. If the screen indicates EXECUTING, keep idling until a result comes on. If the screen indicates OUT OF CONDITION or NOT COMPLETED, go to step 3 and recheck.

5. Turn the ignition switch to LOCK (0).

6. Replace the A/F sensor (Sensor 1) (see page 11-209).

7. Turn the ignition switch to ON (II).

8. Reset the ECM/PCM with the HDS.

9. Do the ECM/PCM idle learn procedure (see page 11-317).

10. Start the engine. Hold the engine speed at 3,000 rpm without load (A/T in P or N, M/T in neutral) until the radiator fan comes on, then let it idle.

11. Check for Temporary DTCs or DTCs with the HDS.

    Is DTC P1172 indicated?

    YES—Check for poor connections or loose terminals at the A/F sensor (Sensor 1) and the ECM/PCM, then go to step 1.

    NO—Go to step 12.

12. Monitor the OBD STATUS for DTC P1172 in the DTCs MENU with the HDS.

    Does the screen indicate PASSED?

    YES—Troubleshooting is complete. If any other Temporary DTCs or DTCs were indicated in step 11, go to the indicated DTC's troubleshooting. ■

    NO—If the screen indicates FAILED, check for poor connections or loose terminals at the A/F sensor (Sensor 1) and the ECM/PCM, then go to step 1. If the screen indicates EXECUTING, keep idling until a result comes on. If the screen indicates OUT OF CONDITION or NOT COMPLETED, go to step 10.

DTC Troubleshooting (cont'd)

DTC P1297: ELD Circuit Low Voltage

NOTE: Before you troubleshoot, record all freeze data and any on-board snapshot, and review the general troubleshooting information (see page 11-3).

1. Turn the ignition switch to ON (II).
2. Check the ELD in the DATA LIST with the HDS.

   Is 72 A or more indicated?

   YES—Go to step 3.

   NO—Intermittent failure, the system is OK at this time. Check for poor connections or loose terminals at the ELD and the ECM/PCM. ■

3. Turn the ignition switch to LOCK (0).
4. Disconnect the ELD 3P connector.
5. Turn the ignition switch to ON (II).
6. Check the ELD in the DATA LIST with the HDS.

   Is 72 A or more indicated?

   YES—Go to step 7.

   NO—Go to step 11.

7. Turn the ignition switch to LOCK (0).
8. Jump the SCS line with the HDS.
9. Disconnect ECM/PCM connector A (49P).
10. Check for continuity between ECM/PCM connector terminal A24 and body ground.

ECM/PCM CONNECTOR A (49P)

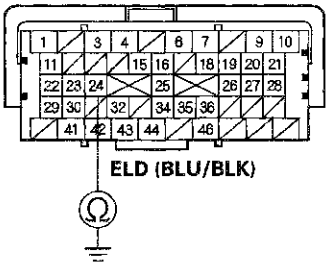

Terminal side of female terminals

Is there continuity?

YES—Repair short in the wire between the ECM/PCM (A24) and the ELD, then go to step 13.

NO—Go to step 20.

11. Turn the ignition switch to LOCK (0).
12. Replace the ELD (see page 11-214).
13. Reconnect all connectors.
14. Turn the ignition switch to ON (II).
15. Reset the ECM/PCM with the HDS.
16. Do the ECM/PCM idle learn procedure (see page 11-317).
17. Start the engine.
18. Turn on the headlights.

19. Check for Temporary DTCs or DTCs with the HDS.

    Is DTC P1297 indicated?

    YES—Check for poor connections or loose terminals at the ELD and the ECM/PCM, then go to step 1.

    NO—Troubleshooting is complete. If any other Temporary DTCs or DTCs are indicated, go to the indicated DTC's troubleshooting. ■

20. Reconnect all connectors.

21. Update the ECM/PCM if it does not have the latest software (see page 11-215), or substitute a known-good ECM/PCM (see page 11-7).

22. Start the engine.

23. Turn on the headlights.

24. Check for Temporary DTCs or DTCs with the HDS.

    Is DTC P1297 indicated?

    YES—Check for poor connections or loose terminals at the ELD and the ECM/PCM. If the ECM/PCM was updated, substitute a known-good ECM/PCM (see page 11-7), then go to step 22. If the ECM/PCM was substituted, go to step 1.

    NO—If the ECM/PCM was updated, troubleshooting is complete. If the ECM/PCM was substituted, replace the original ECM/PCM (see page 11-216). If any other Temporary DTCs or DTCs are indicated, go to the indicated DTC's troubleshooting. ■

DTC P1298: ELD Circuit High Voltage

NOTE: Before you troubleshoot, record all freeze data and any on-board snapshot, and review the general troubleshooting information (see page 11-3).

1. Turn the ignition switch to ON (II).

2. Check the ELD in the DATA LIST with the HDS.

   Is 0.2 A or less indicated?

   YES—Go to step 3.

   NO—Intermittent failure, the system is OK at this time. Check for poor connections or loose terminals at the ELD and the ECM/PCM. ■

3. Turn the ignition switch to LOCK (0).

4. Disconnect the ELD 3P connector.

5. Turn the ignition switch to ON (II).

6. Measure the voltage between ELD 3P connector terminal No. 1 and body ground.

ELD 3P CONNECTOR

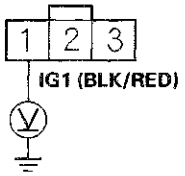

Wire side of female terminals

Is there battery voltage?

YES—Go to step 7.

NO—Check the No. 7 ACG (15 A) fuse in the driver's under-dash fuse/relay box. If the fuse is OK, repair open in the wire between the No. 7 ACG (15 A) fuse and the ELD, then go to step 12.

(cont'd)

DTC Troubleshooting (cont'd)

7. Jump the SCS line with the HDS.

8. Disconnect ECM/PCM connector A (49P).

9. Check for continuity between ELD 3P connector terminal No. 3 and ECM/PCM connector terminal A24.

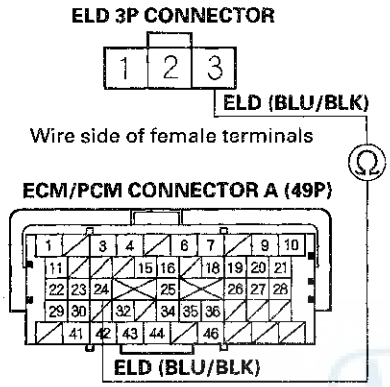

Terminal side of female terminals

Is there continuity?

YES—Go to step 10.

NO—Repair open in the wire between the ECM/PCM (A24) and the ELD, then go to step 12.

10. Check for continuity between ELD 3P connector terminal No. 2 and body ground.

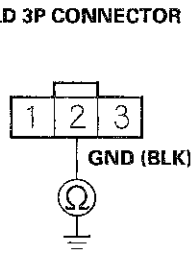

Wire side of female terminals

Is there continuity?

YES—Go to step 11.

NO—Repair open in the wire between the ELD and G301 (see page 22-28), then go to step 12.

11. Replace the ELD (see page 11-214).

12. Reconnect all connectors.

13. Turn the ignition switch to ON (II).

14. Reset the ECM/PCM with the HDS.

15. Do the ECM/PCM idle learn procedure (see page 11-317).

16. Check for Temporary DTCs or DTCs with the HDS.

Is DTC P1298 indicated?

YES—Go to step 17.

NO—Troubleshooting is complete. If any other Temporary DTCs or DTCs are indicated, go to the indicated DTC's troubleshooting. ■

17. Update the ECM/PCM if it does not have the latest software (see page 11-215), or substitute a known-good ECM/PCM (see page 11-7).

18. Check for Temporary DTCs or DTCs with the HDS.

    Is DTC P1298 indicated?

    YES—Check for poor connections or loose terminals at the ELD and the ECM/PCM. If the ECM/PCM was updated, substitute a known-good ECM/PCM (see page 11-7), then recheck. If the ECM/PCM was substituted, go to step 1.

    NO—If the ECM/PCM was updated, troubleshooting is complete. If the ECM/PCM was substituted, replace the original ECM/PCM (see page 11-216). If any other Temporary DTCs or DTCs are indicated, go to the indicated DTC's troubleshooting.■

DTC P1549: Charging System High Voltage

NOTE:
- Before you troubleshoot, record all freeze data and any on-board snapshot, and review the general troubleshooting information (see page 11-3).
- If a high voltage battery (24 V, etc.) is connected to the vehicle, this DTC can be stored.

1. Turn the ignition switch to ON (II).

2. Clear the DTC with the HDS.

3. Start the engine.

4. Check under these conditions:

   - A/C off
   - Headlights off
   - Rear window defogger off

5. Hold the engine speed at 2,000 rpm (A/T in P or N, M/T in neutral) for 1 minute.

6. Check for Temporary DTCs or DTCs with the HDS.

   Is DTC P1549 indicated?

   YES—Replace the alternator (see page 4-32), then go to step 7.

   NO—Intermittent failure, the system is OK at this time. Check for poor connections or loose terminals at the alternator and the under-hood fuse/relay box.■

7. Turn the ignition switch to ON (II).

8. Reset the ECM/PCM with the HDS.

9. Do the ECM/PCM idle learn procedure (see page 11-317).

(cont'd)

DTC Troubleshooting (cont'd)

10. Start the engine.

11. Check under these conditions:

    - A/C off
    - Headlights off
    - Rear window defogger off

12. Hold the engine speed at 2,000 rpm (A/T in P or N, M/T in neutral) for 1 minute.

13. Check for Temporary DTCs or DTCs with the HDS.

    Is DTC P1549 indicated?

    YES—Check for poor connections or loose terminals at the alternator and the under-hood fuse/relay box, then go to step 1.

    NO—Troubleshooting is complete. If any other Temporary DTCs or DTCs are indicated, go to the indicated DTC's troubleshooting.■

DTC P16BB: Alternator B Terminal Circuit Low Voltage

NOTE: Before you troubleshoot, record all freeze data and any on-board snapshot, and review the general troubleshooting information (see page 11-3).

1. Turn the ignition switch to ON (II).

2. Clear the DTC with HDS.

3. Start the engine.

4. Check under these conditions:

    - A/C on
    - Temperature control at maximum cool
    - Blower fan at maximum speed
    - Rear window defogger on
    - Headlights on high beam

5. Hold the engine speed at 2,000 rpm (A/T in P or N, M/T in neutral) for 1 minute.

6. Check for Temporary DTCs or DTCs with the HDS.

    Is DTC P16BB indicated?

    YES—Go to step 7.

    NO—Intermittent failure, the system is OK at this time. Check for poor connections or loose terminals at the alternator and the under-hood fuse/relay box, and check the battery performance (see page 22-88).■

7. Check for poor connections or loose terminals at the alternator and the under-hood fuse/relay box (+B line).

    Are the connections and terminals OK?

    YES—Go to step 8.

    NO—Repair the connectors or terminals, then go to step 9.

8. Check for an open in the wire between the alternator and under-hood fuse/relay box at the starter subharness.

   Is the harness OK?

   YES—Replace the alternator (see page 4-32), then go to step 9.

   NO—Repair open in the wire between the alternator and the under-hood fuse/relay box, then go to step 9.

9. Turn the ignition switch to ON (II).

10. Reset the ECM/PCM with the HDS.

11. Do the ECM/PCM idle learn procedure (see page 11-317).

12. Start the engine.

13. Check under these conditions:

    - A/C on
    - Temperature control at maximum cool
    - Blower fan at maximum speed
    - Rear window defogger on
    - Headlights on high beam

14. Hold the engine speed at 2,000 rpm (A/T in P or N, M/T in neutral) for 1 minute.

15. Check for Temporary DTCs or DTCs with the HDS.

    Is DTC P16BB indicated?

    YES—Check for poor connections or loose terminals at the alternator and the under-hood fuse/relay box, then go to step 1.

    NO—Troubleshooting is complete. If any other Temporary DTCs or DTCs are indicated, go to the indicated DTC's troubleshooting.■

DTC P16BC: Alternator FR Terminal Circuit/ IGP Circuit Low Voltage

NOTE: Before you troubleshoot, record all freeze data and any on-board snapshot, and review the general troubleshooting information (see page 11-3).

1. Check for poor connections or loose terminals at the alternator 4P connector.

   Are the connections and terminals OK?

   YES—Go to step 2.

   NO—Repair the connections or terminals, then go to step 18.

2. Check the alternator mounting surface for corrosion.

   Is the mounting surface corroded?

   YES—Remove the alternator (see page 4-32). Clean all mounting surfaces, reinstall the alternator, then go to step 18.

   NO—Go to step 3.

3. Turn the ignition switch to ON (II).

4. Clear the DTC with the HDS.

5. Start the engine.

6. Check under these conditions:

   - A/C on
   - Temperature control at maximum cool
   - Blower fan at maximum speed
   - Rear window defogger on
   - Headlights on high beam

7. Hold the engine speed at 2,000 rpm (A/T in P or N, M/T in neutral) for 1 minute.

(cont'd)

DTC Troubleshooting (cont'd)

8. Check for Temporary DTCs or DTCs with the HDS.

   Is DTC P16BC indicated?

   YES—Go to step 9.

   NO—Intermittent failure, the system is OK at this time. Check for poor connections or loose terminals at the alternator.■

9. Turn the ignition switch to LOCK (0).

10. Disconnect the alternator 4P connector.

11. Turn the ignition switch to ON (II).

12. Measure the voltage between alternator 4P connector terminal No. 1 and body ground.

ALTERNATOR 4P CONNECTOR

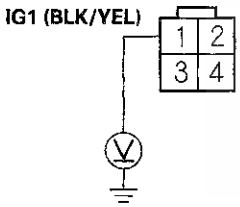

Wire side of female terminals

Is there battery voltage?

YES—Go to step 13.

NO—Repair open in the wire between the alternator (IG1 line) and the No. 7 ACG (15 A) fuse in the driver's under-dash fuse/relay box, then go to step 18.

13. Measure the voltage between alternator 4P connector terminal No. 4 and body ground.

ALTERNATOR 4P CONNECTOR

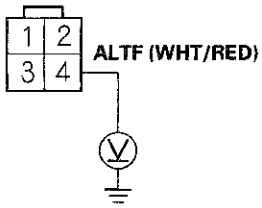

Wire side of female terminals

Is there about 5 V?

YES—Replace the alternator (see page 4-32), then go to step 18.

NO—Go to step 14.

14. Turn the ignition switch to LOCK (0).

15. Jump the SCS line with the HDS.

16. Disconnect ECM/PCM connector B (49P).

17. Check for continuity between alternator 4P connector terminal No. 4 and ECM/PCM connector terminal B47.

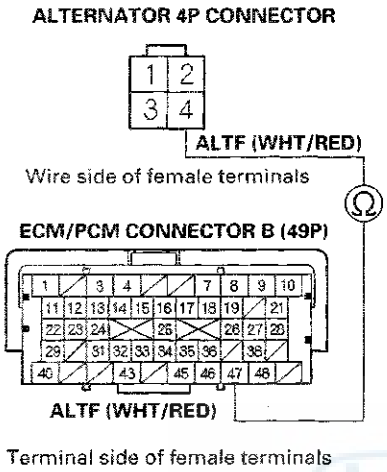

Is there continuity?

YES—Go to step 27.

NO—Repair open in the wire between the ECM/PCM (B47) and the alternator, then go to step 18.

18. Turn the ignition switch to LOCK (0).

19. Reconnect all connectors.

20. Turn the ignition switch to ON (II).

21. Reset the ECM/PCM with the HDS.

22. Do the ECM/PCM idle learn procedure (see page 11-317).

23. Start the engine.

24. Check under these conditions:

- A/C on
- Temperature control at maximum cool
- Blower fan at maximum speed
- Rear window defogger on
- Headlights on high beam

25. Hold the engine speed 2,000 rpm (A/T in P or N, M/T in neutral) for 1 minute.

26. Check for Temporary DTCs or DTCs with the HDS.

Is DTC P16BC indicated?

YES—Check for poor connections or loose terminals at the alternator and the ECM/PCM, then go to step 1.

NO—Troubleshooting is complete. If any other Temporary DTCs or DTCs are indicated, go to the indicated DTC's troubleshooting. ■

27. Reconnect all connectors.

28. Update the ECM/PCM if it does not have the latest software (see page 11-215), or substitute a known-good ECM/PCM (see page 11-7).

29. Start the engine.

30. Check under these conditions:

- A/C on
- Temperature control at maximum cool
- Blower fan at maximum speed
- Rear window defogger on
- Headlights on high beam

31. Hold the engine speed 2,000 rpm (A/T in P or N, M/T in neutral) for 1 minute.

32. Check for Temporary DTCs or DTCs with the HDS.

Is DTC P16BC indicated?

YES—Check for poor connections or loose terminals at the alternator and the ECM/PCM. If the ECM/PCM was updated, substitute a known-good ECM/PCM (see page 11-7), then go to step 29. If the ECM/PCM was substituted, go to step 1.

NO—If the ECM/PCM was updated, troubleshooting is complete. If the ECM/PCM was substituted, replace the original ECM/PCM (see page 11-216). If any other Temporary DTCs or DTCs are indicated, go to the indicated DTC's troubleshooting. ■

DTC Troubleshooting (cont'd)

DTC P2183: ECT Sensor 2 Circuit Range/ Performance Problem

NOTE:
- Before you troubleshoot, record all freeze data and any on-board snapshot, and review the general troubleshooting information (see page 11-3).
- If DTC P0111 is stored at the same time as DTC P2183, troubleshoot DTC P0111 first, then recheck for DTC P2183.

1. Check for poor connections or loose terminals at ECT sensor 1 and ECT sensor 2.

   Are the connections and terminals OK?

   YES—Go to step 2.

   NO—Repair the connectors or terminals, then go to step 27.

2. Turn the ignition switch to ON (II).

3. Check for Temporary DTCs or DTCs with the HDS.

   Are DTC P1116 and P2183 indicated at the same time?

   YES—Go to step 15.

   NO—Go to step 4.

4. Start the engine, and let it idle for 10 minutes.

5. Check ECT SENSOR 2 in the DATA LIST with the HDS.

   Is about 113 °F (45 °C) indicated?

   YES—Replace ECT sensor 2 (see page 11-212), then go to step 27.

   NO—Go to step 6.

6. Turn the ignition switch to LOCK (0).

7. Drain the coolant (see page 10-6).

8. Remove ECT sensor 2 (see page 11-212).

9. Allow ECT sensor 2 to cool to ambient temperature.

10. Note the ambient temperature.

11. Connect ECT sensor 2 to its 2P connector, but do not install it.

12. Turn the ignition switch to ON (II).

13. Note the value of ECT SENSOR 2 quickly in the DATA LIST with the HDS.

14. Compare the value of ECT SENSOR 2 and the ambient temperature.

    Does ECT SENSOR 2 differ 5.4 °F (3 °C) or more?

    YES—Replace ECT sensor 2 (see page 11-212), then go to step 27.

    NO—Intermittent failure, the system is OK at this time. Check for poor connections or loose terminals at ECT sensor 1, ECT sensor 2, and the ECM/PCM. ■

15. Start the engine, and let it idle for 10 minutes.

16. Check ECT SENSOR 1 in the DATA LIST with the HDS.

    Is about 113 °F (45 °C) or less indicated?

    YES—Replace ECT sensor 1 (see page 11-212), then go to step 27.

    NO—Go to step 17.

17. Let the engine idle 10 minutes.

18. Check ECT SENSOR 2 in the DATA LIST with the HDS.

    Is about 113 °F (45 °C) or less indicated?

    YES—Replace ECT sensor 2 (see page 11-212), then go to step 27.

    NO—Go to step 19.

19. Turn the ignition switch to LOCK (0).

20. Drain the coolant (see page 10-6).

21. Remove ECT sensor 1 (see page 11-212) and ECT sensor 2 (see page 11-212).

22. Allow the sensors to cool to ambient temperature.

23. Note the ambient temperature.

24. Connect ECT sensor 1 and ECT sensor 2 to their 2P connectors, but do not install them.

25. Note the value of ECT SENSOR 1 and ECT SENSOR 2 quickly in the DATA LIST with the HDS.

26. Compare the value of ECT SENSOR 1 and the ambient temperature, and the value of ECT SENSOR 2 and the ambient temperature individually.

    Does one of the sensors differ more than 5.4 °F (3 °C) from the ambient temperature?

    YES—Replace the sensor that differed more than 5.4 °F (3 °C) from the ambient temperature, then go to step 27.

    NO—Intermittent failure, the system is OK at this time. Check for poor connections or loose terminals at ECT sensor 1, ECT sensor 2, and the ECM/PCM.■

27. Turn the ignition switch to ON (II).

28. Reset the ECM/PCM with the HDS.

29. Do the ECM/PCM idle learn procedure (see page 11-317).

30. Check for Temporary DTCs or DTCs with the HDS.

    Is DTC P2183 indicated?

    YES—Check for poor connections or loose terminals at ECT sensor 1, ECT sensor 2, and the ECM/PCM, then go to step 1.

    NO—Troubleshooting is complete. If any other Temporary DTCs or DTCs are indicated, go to the indicated DTC's troubleshooting.■

DTC Troubleshooting (cont'd)

DTC P2184: ECT Sensor 2 Circuit Low Voltage

NOTE: Before you troubleshoot, record all freeze data and any on-board snapshot, and review the general troubleshooting information (see page 11-3).

1. Turn the ignition switch to ON (II).
2. Check ECT SENSOR 2 in the DATA LIST with the HDS.

   Is about 356 °F (180 °C) or more, or 0.08 V or less indicated?

   YES—Go to step 3.

   NO—Intermittent failure, the system is OK at this time. Check for poor connections or loose terminals at ECT sensor 2 and the ECM/PCM. ■
3. Turn the ignition switch to LOCK (0).
4. Disconnect the ECT sensor 2 2P connector.
5. Turn the ignition switch to ON (II).
6. Check ECT SENSOR 2 in the DATA LIST with the HDS.

   Is about 356 °F (180 °C) or more, or 0.08 V or less indicated?

   YES—Go to step 7.

   NO—Go to step 11.
7. Turn the ignition switch to LOCK (0).
8. Jump the SCS line with the HDS.
9. Disconnect ECM/PCM connector A (49P).
10. Check for continuity between ECT sensor 2 2P connector terminal No. 1 and body ground.

ECT SENSOR 2 2P CONNECTOR

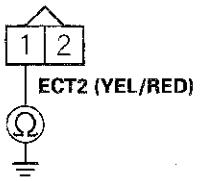

Wire side of female terminals

Is there continuity?

YES—Repair short in the wire between ECT sensor 2 and the ECM/PCM (A34), then go to step 13.

NO—Go to step 18.

11. Turn the ignition switch to LOCK (0).
12. Replace ECT sensor 2 (see page 11-212).
13. Reconnect all connectors.
14. Turn the ignition switch to ON (II).
15. Reset the ECM/PCM with the HDS.
16. Do the ECM/PCM idle learn procedure (see page 11-317).

17. Check for Temporary DTCs or DTCs with the HDS.

    Is DTC P2184 indicated?

    YES—Check for poor connections or loose terminals at ECT sensor 2 and the ECM/PCM, then go to step 1.

    NO—Troubleshooting is complete. If any other Temporary DTCs or DTCs are indicated, go to the indicated DTC's troubleshooting. ■

18. Reconnect all connectors.

19. Update the ECM/PCM if it does not have the latest software (see page 11-215), or substitute a known-good ECM/PCM (see page 11-7).

20. Check for Temporary DTCs or DTCs with the HDS.

    Is DTC P2184 indicated?

    YES—Check for poor connections or loose terminals at ECT sensor 2 and the ECM/PCM. If the ECM/PCM was updated, substitute a known-good ECM/PCM (see page 11-7), then recheck. If the ECM/PCM was substituted, go to step 1.

    NO—If the ECM/PCM was updated, troubleshooting is complete. If the ECM/PCM was substituted, replace the original ECM/PCM (see page 11-216). If any other Temporary DTCs or DTCs are indicated, go to the indicated DTC's troubleshooting. ■

DTC P2185: ECT Sensor 2 Circuit High Voltage

NOTE: Before you troubleshoot, record all freeze data and any on-board snapshot, and review the general troubleshooting information (see page 11-3).

1. Turn the ignition switch to ON (II).

2. Check ECT SENSOR 2 in the DATA LIST with the HDS.

   Is about −40 °F (−40 °C) or less, or 4.90 V or more indicated?

   YES—Go to step 3.

   NO—Intermittent failure, the system is OK at this time. Check for poor connections or loose terminals at ECT sensor 2 and the ECM/PCM. ■

3. Turn the ignition switch to LOCK (0).

4. Disconnect the ECT sensor 2 2P connector.

5. Connect ECT sensor 2 2P connector terminals No. 1 and No. 2 with a jumper wire.

ECT SENSOR 2 2P CONNECTOR

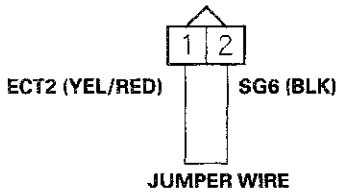

Wire side of female terminals

(cont'd)

DTC Troubleshooting (cont'd)

6. Turn the ignition switch to ON (II).

7. Check ECT SENSOR 2 in the DATA LIST with the HDS.

   Is about −40 °F (−40 °C) or less, or 4.90 V or more indicated?

   YES—Go to step 8.

   NO—Go to step 20.

8. Turn the ignition switch to LOCK (0).

9. Remove the jumper wire from the ECT sensor 2 2P connector.

10. Turn the ignition switch to ON (II).

11. Measure the voltage between ECT sensor 2 2P connector terminal No. 1 and body ground.

ECT SENSOR 2 2P CONNECTOR

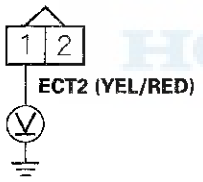

Wire side of female terminals

Is there about 5 V?

YES—Go to step 12.

NO—Go to step 16.

12. Turn the ignition switch to LOCK (0).

13. Jump the SCS line with the HDS.

14. Disconnect ECM/PCM connector A (49P).

15. Check for continuity between ECT sensor 2 2P connector terminal No. 2 and ECM/PCM connector terminal A10.

ECT SENSOR 2 2P CONNECTOR

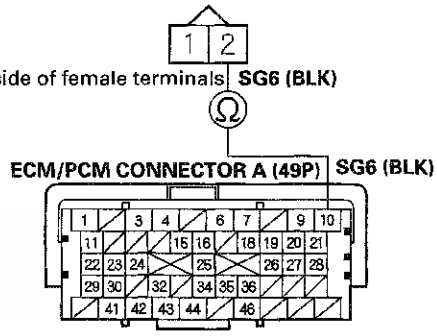

Terminal side of female terminals

Is there continuity?

YES—Go to step 27.

NO—Repair open in the wire between the ECM/PCM (A10) and ECT sensor 2, then go to step 22.

16. Turn the ignition switch to LOCK (0).

17. Jump the SCS line with the HDS.

18. Disconnect ECM/PCM connector A (49P).

19. Check for continuity between ECT sensor 2 2P connector terminal No. 1 and ECM/PCM connector terminal A34.

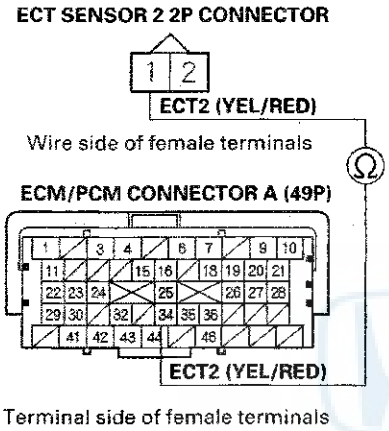

Is there continuity?

YES—Go to step 27.

NO—Repair open in the wire between the ECM/PCM (A34) and ECT sensor 2, then go to step 22.

20. Turn the ignition switch to LOCK (0).

21. Replace ECT sensor 2 (see page 11-212).

22. Reconnect all connectors.

23. Turn the ignition switch to ON (II).

24. Reset the ECM/PCM with the HDS.

25. Do the ECM/PCM idle learn procedure (see page 11-317).

26. Check for Temporary DTCs or DTCs with the HDS.

Is DTC P2185 indicated?

YES—Check for poor connections or loose terminals at ECT sensor 2 and the ECM/PCM, then go to step 1.

NO—Troubleshooting is complete. If any other Temporary DTCs or DTCs are indicated, go to the indicated DTC's troubleshooting.■

27. Reconnect all connectors.

28. Update the ECM/PCM if it does not have the latest software (see page 11-215), or substitute a known-good ECM/PCM (see page 11-7).

29. Check for Temporary DTCs or DTCs with the HDS.

Is DTC P2185 indicated?

YES—Check for poor connections or loose terminals at ECT sensor 2 and the ECM/PCM. If the ECM/PCM was updated, substitute a known-good ECM/PCM (see page 11-7), then recheck. If the ECM/PCM was substituted, go to step 1.

NO—If the ECM/PCM was updated, troubleshooting is complete. If the ECM/PCM was substituted, replace the original ECM/PCM (see page 11-216). If any other Temporary DTCs or DTCs are indicated, go to the indicated DTC's troubleshooting.■

DTC Troubleshooting (cont'd)

DTC P2195: A/F Sensor (Sensor 1) Signal Stuck Lean

NOTE:
- Before you troubleshoot, record all freeze data and any on-board snapshot, and review the general troubleshooting information (see page 11-3).
- If the vehicle was out of fuel and the engine stalled before this DTC was stored, refuel and clear the DTC with the HDS.
- If DTC P2101, P2118, P2135, P2138, P2176, or a combination of P2122 and P2127, P2122, and P2138, or P2127 and P2138 is stored at the same time, troubleshoot them first, then recheck for DTC P2195.

1. Check the installation of the A/F sensor (Sensor 1).

   Is the A/F sensor loose or disconnected from the exhaust pipe?

   YES—Go to step 6.

   NO—Go to step 2.

2. Turn the ignition switch to ON (II).

3. Clear the DTC with the HDS.

4. Start the engine, and let it idle without load (A/T in P or N, M/T in neutral) until the radiator fan comes on.

5. Check for Temporary DTCs or DTCs with the HDS.

   Is DTC P2195 indicated?

   YES—Check for poor connections or loose terminals at the A/F sensor (Sensor 1) and the ECM/PCM, then go to step 13.

   NO—Intermittent failure, the system is OK at this time. Check for poor connections or loose terminals at the A/F sensor (Sensor 1) and the ECM/PCM. If any other Temporary DTCs or DTCs are indicated, go to the indicated DTC's troubleshooting.■

6. Turn the ignition switch to LOCK (0).

7. Reinstall the A/F sensor (Sensor 1) (see page 11-209).

8. Turn the ignition switch to ON (II).

9. Reset the ECM/PCM with the HDS.

10. Do the ECM/PCM idle learn procedure (see page 11-317).

11. Check for Temporary DTCs or DTCs with the HDS.

    Is DTC P2195 indicated?

    YES—Check for poor connections or loose terminals at the A/F sensor (Sensor 1) and the ECM/PCM, then go to step 1.

    NO—Go to step 12.

12. Monitor the OBD STATUS for DTC P2195 in the DTCs MENU with the HDS.

    Does the screen indicate PASSED?

    YES—Troubleshooting is complete. If any other Temporary DTCs or DTCs were indicated in step 11, go to the indicated DTC's troubleshooting.■

    NO—If the screen indicates FAILED, check for poor connections or loose terminals at the A/F sensor (Sensor 1) and the ECM/PCM, then go to step 1. If the screen indicated NOT COMPLETED, keep idling until a result comes on.

13. Update the ECM/PCM if it does not have the latest software (see page 11-215), or substitute a known-good ECM/PCM (see page 11-7).

14. Start the engine, and let it idle without load (A/T in P or N, M/T in neutral) until the radiator fan comes on.

15. Check for Temporary DTCs or DTCs with the HDS.

    Is DTC P2195 indicated?

    YES—Check for poor connections or loose terminals at the A/F sensor (Sensor 1) and the ECM/PCM. If the ECM/PCM was updated, substitute a known-good ECM/PCM (see page 11-7), then go to step 14. If the ECM/PCM was substituted, go to step 1.

    NO—Go to step 16.

16. Monitor the OBD STATUS for DTC P2195 in the DTCs MENU with the HDS.

    Does the screen indicate PASSED?

    YES—If the ECM/PCM was updated, troubleshooting is complete. If the ECM/PCM was substituted, replace the original ECM/PCM (see page 11-216). If any other Temporary DTCs or DTCs were indicated in step 15, go to the indicated DTC's troubleshooting. ■

    NO—If the screen indicates FAILED, check for poor connections or loose terminals at the A/F sensor (Sensor 1) and the ECM/PCM. If the ECM/PCM was updated, substitute a known-good ECM/PCM (see page 11-7), then go to step 14. If the ECM/PCM was substituted, go to step 1. If the screen indicates NOT COMPLETED, keep idling until a result comes on.

DTC P2227: BARO Sensor Circuit Range/ Performance Problem

NOTE:
- Before you troubleshoot, record all freeze data and any on-board snapshot, and review the general troubleshooting information (see page 11-3).
- If DTC P0107, P0108, P1128, and/or P1129 are stored at the same time as DTC P2227, troubleshoot those DTCs first, then recheck for DTC P2227.

1. Turn the ignition switch to ON (II), and wait 2 seconds.

2. Check the BARO SENSOR in the DATA LIST with the HDS.

   Is about 101 kPa (29.9 in.Hg, 760 mmHg), or about 2.9 V at sea level indicated?

   YES—Go to step 3.

   NO—Go to step 7.

3. Clear the DTC with the HDS.

4. Start the engine. Hold the engine speed at 3,000 rpm without load (A/T in P or N, M/T in neutral) until the radiator fan comes on, then let it idle.

5. Test-drive under these conditions:

   - Engine coolant temperature (ECT SENSOR 1) above 158 °F (70 °C)
   - A/T in D, M/T in 4th
   - REL TP SENSOR between 16 deg and 28 deg for at least 3 seconds

6. Monitor the OBD STATUS for DTC P2227 in the DTCs MENU with the HDS.

   Does the screen indicate FAILED?

   YES—Go to step 7.

   NO—If the screen indicates PASSED, intermittent failure, the system is OK at this time. Check for something that may have clogged the intake air system. If the screen indicates NOT COMPLETED, go to step 4 and recheck.

(cont'd)

DTC Troubleshooting (cont'd)

7. Check the intake air system for clogging or restrictions (foreign material, dirty air cleaner element, etc.).

   Is the intake air system clogged or restricted?

   YES—Remove the clog or restriction, then go to step 9.

   NO—Go to step 8.

8. Update the ECM/PCM if it does not have the latest software (see page 11-215), or substitute a known-good ECM/PCM (see page 11-7).

9. Start the engine. Hold the engine speed at 3,000 rpm without load (A/T in P or N, M/T in neutral) until the radiator fan comes on, then let it idle.

10. Test-drive under these conditions:

    - Engine coolant temperature (ECT SENSOR 1) above 158 °F (70 °C)
    - A/T in D, M/T in 4th
    - REL TP SENSOR between 16 deg and 28 deg for at least 3 seconds

11. Check for Temporary DTCs or DTCs with the HDS.

    Is DTC P2227 indicated?

    YES—Check for poor connections or loose terminals at the ECM/PCM. If the ECM/PCM was updated, substitute a known-good ECM/PCM (see page 11-7), then go to step 9. If the ECM/PCM was substituted, go to step 1.

    NO—Go to step 12.

12. Monitor the OBD STATUS for DTC P2227 in the DTCs MENU with the HDS.

    Does the screen indicate PASSED?

    YES—If the ECM/PCM was updated, troubleshooting is complete. If the ECM/PCM was substituted, replace the original ECM/PCM (see page 11-216). If any other Temporary DTCs or DTCs were indicated in step 11, go to the indicated DTC's troubleshooting. ■

    NO—If the screen indicates FAILED, check for poor connections or loose terminals at the ECM/PCM. If the ECM/PCM was updated, substitute a known-good ECM/PCM (see page 11-7), then go to step 9. If the ECM/PCM was substituted, go to step 1. If the screen indicates NOT COMPLETED, go to step 9.

DTC P2228: BARO Sensor Circuit Low Voltage

NOTE: Before you troubleshoot, record all freeze data and any on-board snapshot, and review the general troubleshooting information (see page 11-3).

1. Turn the ignition switch to ON (II).

2. Check the BARO SENSOR in the DATA LIST with the HDS.

   Is about 53 kPa (15.6 in.Hg, 397 mmHg), or 1.58 V or less indicated?

   YES—Go to step 3.

   NO—Intermittent failure, the system is OK at this time. ■

3. Update the ECM/PCM if it does not have the latest software (see page 11-215), or substitute a known-good ECM/PCM (see page 11-7).

4. Check for Temporary DTCs or DTCs with the HDS.

   Is DTC P2228 indicated?

   YES—Check for poor connections or loose terminals at the ECM/PCM. If the ECM/PCM was updated, substitute a known-good ECM/PCM (see page 11-7), then recheck. If the ECM/PCM was substituted, go to step 1.

   NO—If the ECM/PCM was updated, troubleshooting is complete. If the ECM/PCM was substituted, replace the original ECM/PCM (see page 11-216). If any other Temporary DTCs or DTCs are indicated, go to the indicated DTC's troubleshooting. ■

DTC P2229: BARO Sensor Circuit High Voltage

NOTE: Before you troubleshoot, record all freeze data and any on-board snapshot, and review the general troubleshooting information (see page 11-3).

1. Turn the ignition switch to ON (II).

2. Check the BARO SENSOR in the DATA LIST with the HDS.

   Is about 160 kPa (47.2 in.Hg, 1,200 mmHg), or 4.5 V or more indicated?

   YES—Go to step 3.

   NO—Intermittent failure, the system is OK at this time. ■

3. Update the ECM/PCM if it does not have the latest software (see page 11-215), or substitute a known-good ECM/PCM (see page 11-7).

4. Check for Temporary DTCs or DTCs with the HDS.

   Is DTC P2229 indicated?

   YES—Check for poor connections or loose terminals at the ECM/PCM. If the ECM/PCM was updated, substitute a known-good ECM/PCM (see page 11-7), then recheck. If the ECM/PCM was substituted, go to step 1.

   NO—If the ECM/PCM was updated, troubleshooting is complete. If the ECM/PCM was substituted, replace the original ECM/PCM (see page 11-216). If any other Temporary DTCs or DTCs are indicated, go to the indicated DTC's troubleshooting. ■

DTC Troubleshooting (cont'd)

DTC P2238: A/F Sensor (Sensor 1) AFS+ Circuit Low Voltage

NOTE: Before you troubleshoot, record all freeze data and any on-board snapshot, and review the general troubleshooting information (see page 11-3).

1. Turn the ignition switch to ON (II).
2. Clear the DTC with the HDS.
3. Check for Temporary DTCs or DTCs with the HDS.

   Is DTC P2238 indicated?

   YES—Go to step 4.

   NO—Intermittent failure, the system is OK at this time. Check for poor connections or loose terminals at the A/F sensor (Sensor 1) and the ECM/PCM. ■
4. Turn the ignition switch to LOCK (0).
5. Jump the SCS line with the HDS.
6. Disconnect the A/F sensor (Sensor 1) 4P connector.
7. Disconnect ECM/PCM connector C (49P).
8. Check for continuity between ECM/PCM connector terminal C29 and body ground.

ECM/PCM CONNECTOR C (49P)

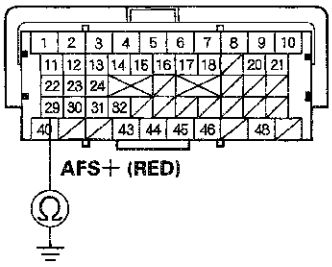

Terminal side of female terminals

Is there continuity?

YES—Repair short in the wire between the ECM/PCM (C29) and the A/F sensor (Sensor 1), then go to step 10.

NO—Go to step 9.

9. Replace the A/F sensor (Sensor 1) (see page 11-209).
10. Reconnect all connectors.
11. Turn the ignition switch to ON (II).
12. Reset the ECM/PCM with the HDS.
13. Do the ECM/PCM idle learn procedure (see page 11-317).
14. Check for Temporary DTCs or DTCs with the HDS.

    Is DTC P2238 indicated?

    YES—Check for poor connections or loose terminals at the A/F sensor (Sensor 1) and the ECM/PCM, then go to step 1. If the connector and terminal fits are OK, go to step 16.

    NO—Go to step 15.
15. Monitor the OBD STATUS for DTC P2238 in the DTCs MENU with the HDS.

    Does the screen indicate PASSED?

    YES—Troubleshooting is complete. If any other Temporary DTCs or DTCs were indicated in step 14, go to the indicated DTC's troubleshooting. ■

    NO—If the screen indicates FAILED, check for poor connections or loose terminals at the A/F sensor (Sensor 1) and the ECM/PCM, then go to step 1. If the screen indicates NOT COMPLETED, keep idling until a result comes on.
16. Update the ECM/PCM if it does not have the latest software (see page 11-215), or substitute a known-good ECM/PCM (see page 11-7).
17. Start the engine, and let it idle.

18. Check for Temporary DTCs or DTCs with the HDS.

    Is DTC P2238 indicated?

    YES—If the ECM/PCM was updated, substitute a known-good ECM/PCM (see page 11-7), then go to step 17. If the ECM/PCM was substituted, go to step 1.

    NO—Go to step 19.

19. Monitor the OBD STATUS for DTC P2238 in the DTCs MENU with the HDS.

    Does the screen indicate PASSED?

    YES—If the ECM/PCM was updated, troubleshooting is complete. If the ECM/PCM was substituted, replace the original ECM/PCM (see page 11-216). If any other Temporary DTCs or DTCs were indicated in step 18, go to the indicated DTC's troubleshooting. ■

    NO—If the screen indicates FAILED, go to step 1. If the ECM/PCM was updated, substitute a known-good ECM/PCM (see page 11-7), then go to step 17. If the ECM/PCM was substituted, go to step 1. If the screen indicates NOT COMPLETED, keep idling until a result comes on.

DTC P2252: A/F Sensor (Sensor 1) AFS—Circuit Low Voltage

NOTE: Before you troubleshoot, record all freeze data and any on-board snapshot, and review the general troubleshooting information (see page 11-3).

1. Turn the ignition switch to ON (II).
2. Clear the DTC with the HDS.
3. Start the engine.
4. Check for Temporary DTCs or DTCs with the HDS.

   Is DTC P2252 indicated?

   YES—Go to step 5.

   NO—Intermittent failure, the system is OK at this time. Check for poor connections or loose terminals at the A/F sensor (Sensor 1) and the ECM/PCM. ■

5. Turn the ignition switch to LOCK (0).
6. Jump the SCS line with the HDS.
7. Disconnect the A/F sensor (Sensor 1) 4P connector.
8. Disconnect ECM/PCM connector C (49P).

(cont'd)

DTC Troubleshooting (cont'd)

9. Check for continuity between ECM/PCM connector terminal C30 and body ground.

ECM/PCM CONNECTOR C (49P)

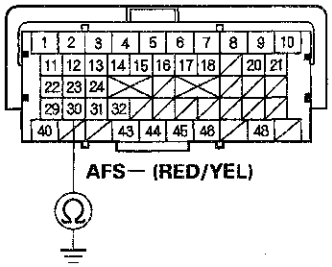

Terminal side of female terminals

Is there continuity?

YES—Repair short in the wire between the ECM/PCM (C30) and the A/F sensor (Sensor 1), then go to step 11.

NO—Go to step 10.

10. Replace the A/F sensor (Sensor 1) (see page 11-209).

11. Reconnect all connectors.

12. Turn the ignition switch to ON (II).

13. Reset the ECM/PCM with the HDS.

14. Do the ECM/PCM idle learn procedure (see page 11-317).

15. Check for Temporary DTCs or DTCs with the HDS.

Is DTC P2252 indicated?

YES—Check for poor connections or loose terminals at the A/F sensor (Sensor 1) and the ECM/PCM, then go to step 1. If the connector and terminal fits are OK, go to step 17.

NO—Go to step 16.

16. Monitor the OBD STATUS for DTC P2252 in the DTCs MENU with the HDS.

Does the screen indicate PASSED?

YES—Troubleshooting is complete. If any other Temporary DTCs or DTCs were indicated in step 15, go to the indicated DTC's troubleshooting.■

NO—If the screen indicates FAILED, check for poor connections or loose terminals at the A/F sensor (Sensor 1) and the ECM/PCM, then go to step 1. If the screen indicates NOT COMPLETED, keep idling until a result comes on.

17. Update the ECM/PCM if it does not have the latest software (see page 11-215), or substitute a known-good ECM/PCM (see page 11-7).

18. Start the engine, and let it idle.

19. Check for Temporary DTCs or DTCs with the HDS.

Is DTC P2252 indicated?

YES—Go to step 1 and recheck.

NO—Go to step 20.

20. Monitor the OBD STATUS for DTC P2252 in the DTCs MENU with the HDS.

    Does the screen indicate PASSED?

    YES—If the ECM/PCM was updated, troubleshooting is complete. If the ECM/PCM was substituted, replace the original ECM/PCM (see page 11-216). If any other Temporary DTCs or DTCs was indicated in step 19, go to the indicated DTC's troubleshooting.■

    NO—If the screen indicates FAILED, go to step 1. If the ECM/PCM was updated, substitute a known-good ECM/PCM (see page 11-7), then go to step 18. If the screen indicates NOT COMPLETED, keep idling until a result comes on.

DTC P2610: ECM/PCM Ignition Off Internal Timer Malfunction

NOTE: Before you troubleshoot, record all freeze data and any on-board snapshot, and review the general troubleshooting information (see page 11-3).

1. Turn the ignition switch to ON (II).

2. Clear the DTC with the HDS.

3. Check for Temporary DTCs or DTCs with the HDS.

   Is DTC P2610 indicated?

   YES—Go to step 4.

   NO—Intermittent failure, the system is OK at this time.■

4. Update the ECM/PCM if it does not have the latest software (see page 11-215), or substitute a known-good ECM/PCM (see page 11-7).

5. Check for Temporary DTCs or DTCs with the HDS.

   Is DTC P2610 indicated?

   YES—If the ECM/PCM was updated, substitute a known-good ECM/PCM (see page 11-7), then recheck. If the ECM/PCM was substituted, go to step 1.

   NO—If the ECM/PCM was updated, troubleshooting is complete. If the ECM/PCM was substituted, replace the original ECM/PCM (see page 11-216). If any other Temporary DTCs or DTCs are indicated, go to the indicated DTC's troubleshooting.■

DTC Troubleshooting (cont'd)

DTC P2A00: A/F Sensor (Sensor 1) Circuit Range/Performance Problem

NOTE: Before you troubleshoot, record all freeze data and any on-board snapshot, and review the general troubleshooting information (see page 11-3).

1. Turn the ignition switch to ON (II).

2. Clear the DTC with the HDS.

3. Start the engine. Hold the engine speed at 3,000 rpm without load (A/T in P or N, M/T in neutral) until the radiator fan comes on, then let it idle.

4. Test-drive under these conditions:

   - Engine coolant temperature (ECT SENSOR 1) above 158 °F (70 °C)
   - A/T in D, M/T in 3rd
   - Vehicle speed between 25—55 mph (40—88 km/h) for 5 minutes
   - Drive at a steady speed between 55—75 mph (88—120 km/h) for 10 seconds, then decelerate (with throttle fully closed) for 5 seconds

5. Monitor the OBD STATUS for DTC P2A00 in the DTCs MENU with the HDS.

   Does the screen indicate FAILED?

   YES—Go to step 6.

   NO—If the screen indicates PASSED, intermittent failure, the system is OK at this time. Check for poor connections or loose terminals at the A/F sensor (Sensor 1) and the ECM/PCM. If the screen indicates EXECUTING, keep driving until a result comes on. If the screen indicates OUT OF CONDITION or NOT COMPLETED, go to step 3 and recheck.

6. Turn the ignition switch to LOCK (0).

7. Replace the A/F sensor (Sensor 1) (see page 11-209).

8. Turn the ignition switch to ON (II).

9. Reset the ECM/PCM with the HDS.

10. Do the ECM/PCM idle learn procedure (see page 11-317).

11. Test-drive under these conditions:

    - Engine coolant temperature (ECT SENSOR 1) above 158 °F (70 °C)
    - A/T in D, M/T in 3rd
    - Vehicle speed between 25—55 mph (40—88 km/h) for 5 minutes
    - Drive at a steady speed between 55—75 mph (88—120 km/h) for 10 seconds, then decelerate (with throttle fully closed) for 5 seconds

12. Check for Temporary DTCs or DTCs with the HDS.

    Is DTC P2A00 indicated?

    YES—Check for poor connections or loose terminals at the A/F sensor (Sensor 1) and the ECM/PCM, then go to step 1.

    NO—Go to step 13.

13. Monitor the OBD STATUS for DTC P2A00 in the DTCs MENU with the HDS.

    Does the screen indicate PASSED?

    YES—Troubleshooting is complete. If any other Temporary DTCs or DTCs were indicated in step 12, go to the indicated DTC's troubleshooting. ■

    NO—If the screen indicates FAILED, check for poor connections or loose terminals at the A/F sensor (Sensor 1) and the ECM/PCM, then go to step 1. If the screen indicates EXECUTING, keep driving until a result comes on. If the screen indicates OUT OF CONDITION or NOT COMPLETED, go to step 11.

DTC U0029: F-CAN Malfunction (BUS-OFF (ECM/PCM))

NOTE: Before you troubleshoot, record all freeze data and any on-board snapshot, and review the general troubleshooting information (see page 11-3).

1. Turn the ignition switch to ON (II).

2. Clear the DTC with the HDS.

3. Check for Temporary DTCs or DTCs with the HDS.

   Is DTC U0029 indicated?

   YES—Go to step 4.

   NO—Intermittent failure, the system is OK at this time. ■

4. Update the ECM/PCM if it does not have the latest software (see page 11-215), or substitute a known-good ECM/PCM (see page 11-7).

5. Check for Temporary DTCs or DTCs with the HDS.

   Is DTC U0029 indicated?

   YES—If the ECM/PCM was updated, substitute a known-good ECM/PCM (see page 11-7), then recheck. If the ECM/PCM was substituted, go to step 1.

   NO—If the ECM/PCM was updated, troubleshooting is complete. If the ECM/PCM was substituted, replace the original ECM/PCM (see page 11-216). If any other Temporary DTCs or DTCs are indicated, go to the indicated DTC's troubleshooting. ■

DTC U0122: F-CAN Malfunction (ECM/PCM-VSA Modulator-Control Unit)

NOTE: Before you troubleshoot, record all freeze data and any on-board snapshot, and review the general troubleshooting information (see page 11-3).

1. Turn the ignition switch to ON (II).

2. Check for Temporary DTCs or DTCs with the HDS.

   Are DTC U0029 and U0122 indicated at the same time?

   YES—Go to troubleshooting for DTC U0029 (see page 11-177). ■

   NO—Go to step 3.

3. Clear the DTC with the HDS.

4. Check for Temporary DTCs or DTCs with the HDS.

   Is DTC U0122 indicated?

   YES—Go to step 5.

   NO—Intermittent failure, the system is OK at this time. Check for poor connections or loose terminals at the VSA modulator-control unit and the ECM/PCM. ■

5. Check for communication to the VSA system with the HDS.

   Does the HDS communicate with the VSA modulator-control unit?

   YES—Go to step 6.

   NO—Go to the DLC circuit troubleshooting (see page 11-192). ■

(cont'd)

DTC Troubleshooting (cont'd)

6. Turn the ignition switch to LOCK (0).
7. Jump the SCS line with the HDS.
8. Disconnect the VSA modulator-control unit 36P connector.
9. Disconnect ECM/PCM connector A (49P).
10. Check for continuity between ECM/PCM connector terminal A3 and VSA modulator-control unit 36P connector terminal No. 14.

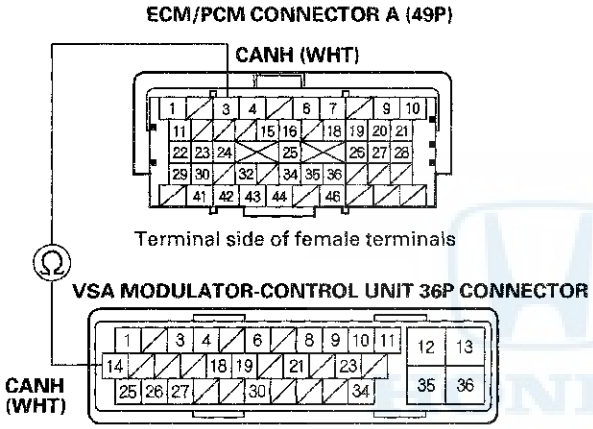

Is there continuity?

YES—Go to step 11.

NO—Repair open in the wire between the ECM/PCM (A3) and the VSA modulator-control unit, then go to step 12.

11. Check for continuity between ECM/PCM connector terminal A4 and VSA modulator-control unit 36P connector terminal No. 1.

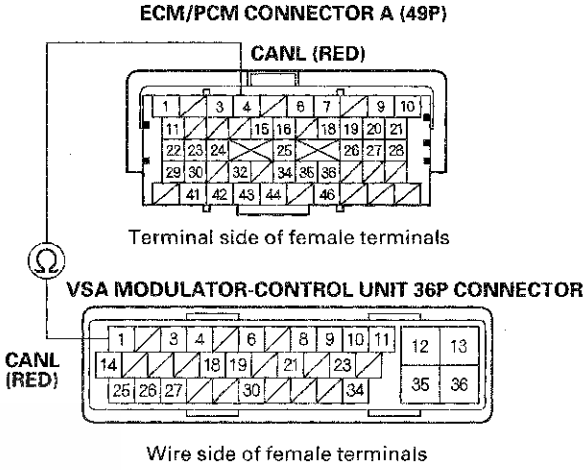

Is there continuity?

YES—Update the VSA modulator-control unit if it does not have the latest software (see page 19-140), or substitute a known-good VSA modulator-control unit (see page 19-141), then go to step 12 and recheck. If DTC U0122 is not indicated after substitution, replace the original VSA modulator-control unit (see page 19-141), then go to step 12.

NO—Repair open in the wire between the ECM/PCM (A4) and the VSA modulator-control unit, then go to step 12.

12. Reconnect all connectors.

13. Turn the ignition switch to ON (II).

14. Reset the ECM/PCM with the HDS.

15. Do the ECM/PCM idle learn procedure (see page 11-317).

16. Check for Temporary DTCs or DTCs with the HDS.

    Is DTC U0122 indicated?

    YES—Check for poor connections or loose terminals at the VSA modulator-control unit and the ECM/PCM, then go to step 1.

    NO—Troubleshooting is complete. If any other Temporary DTCs or DTCs are indicated, go to the indicated DTC's troubleshooting.■

DTC U0155: F-CAN Malfunction (ECM/PCM-Gauge Control Module)

NOTE: Before you troubleshoot, record all freeze data and any on-board snapshot, and review the general troubleshooting information (see page 11-3).

1. Turn the ignition switch to ON (II).

2. Clear the DTC with the HDS.

3. Check for Temporary DTCs or DTCs with the HDS.

   Is DTC U0155 indicated?

   YES—Go to step 4.

   NO—Intermittent failure, the system is OK at this time. Check for poor connections or loose terminals at the gauge control module and the ECM/PCM.■

4. Check for body electrical DTCs in the DTCs MENU with the HDS.

   Is DTC B1168, B1169, and/or B1178 indicated?

   YES—Go to step 5.

   NO—Do the gauge control module input test (see page 22-320).■

5. Turn the ignition switch to LOCK (0).

6. Jump the SCS line with the HDS.

7. Remove the gauge control module (see page 22-324).

8. Disconnect the gauge control module 32P connector.

9. Disconnect ECM/PCM connector A (49P).

(cont'd)

DTC Troubleshooting (cont'd)

10. Connect gauge control module 32P connector terminal No. 30 to body ground with a jumper wire.

GAUGE CONTROL MODULE 32P CONNECTOR

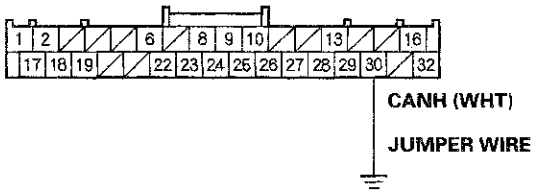

Wire side of female terminals

11. Check for continuity between ECM/PCM connector terminal A3 and body ground.

ECM/PCM CONNECTOR A (49P)

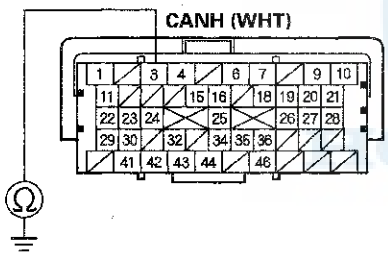

Terminal side of female terminals

Is there continuity?

YES—Go to step 12.

NO—Repair open in the wire between the ECM/PCM (A3) and the gauge control module, then go to step 14.

12. Connect gauge control module 32P connector terminal No. 29 to body ground with a jumper wire.

GAUGE CONTROL MODULE 32P CONNECTOR

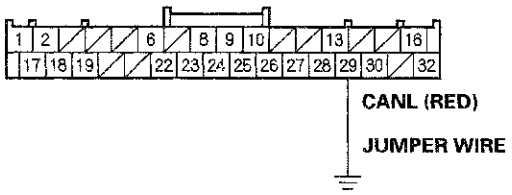

Wire side of female terminals

13. Check for continuity between ECM/PCM connector terminal A4 and body ground.

ECM/PCM CONNECTOR A (49P)

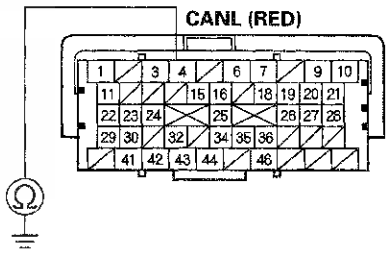

Terminal side of female terminals

Is there continuity?

YES—Substitute a known-good gauge control module (see page 22-324), then go to step 14 and recheck. If DTC U0155 is not indicated after substitution, replace the original gauge control module (see page 22-324), then go to step 14.

NO—Repair open in the wire between the ECM/PCM (A4) and the gauge control module, then go to step 14.

14. Reconnect all connectors.

15. Turn the ignition switch to ON (II).

16. Reset the ECM/PCM with the HDS.

17. Do the ECM/PCM idle learn procedure (see page 11-317).

18. Check for Temporary DTCs or DTCs with the HDS.

    Is DTC U0155 indicated?

    YES—Check for poor connections or loose terminals at the gauge control module and the ECM/PCM, then go to step 1.

    NO—Troubleshooting is complete. If any other Temporary DTCs or DTCs are indicated, go to the indicated DTC's troubleshooting. ■

DTC U0300: PGM-FI System and A/T System Program Version Mismatch

NOTE:
- Before you troubleshoot, record all freeze data and any on-board snapshot, and review the general troubleshooting information (see page 11-3).
- Do not turn the ignition switch to LOCK (0) or ACC (I) while updating the PCM. If you turn the ignition switch to LOCK (0) or ACC (I) before completion, the PCM will be damaged.

1. Do the PCM update procedure (PGM-FI system and A/T system) (see page 11-215).

2. Check for Temporary DTCs or DTCs with the HDS.

   Is DTC U0300 indicated?

   YES—Replace the original PCM (see page 11-216). ■

   NO—Troubleshooting is complete. If any other Temporary DTCs or DTCs are indicated, go to the indicated DTC's troubleshooting. ■

HONDA

F-CAN Circuit Troubleshooting

1. Turn the ignition switch to LOCK (0).
2. Jump the SCS line with the HDS.
3. Disconnect ECM/PCM connector A (49P).
4. Measure the resistance between ECM/PCM connector terminals A3 and A4.

ECM/PCM CONNECTOR A (49P)

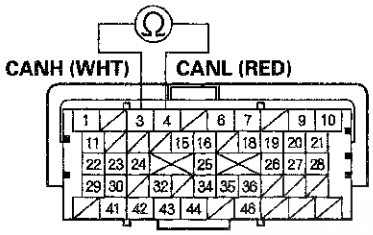

Terminal side of female terminals

Is there about 88– 111 Ω ?

YES—Go to step 31.

NO—Go to step 5.

5. Disconnect these connectors:
   - Gauge control module 32P (see page 22-324).
   - VSA modulator-control unit 36P (see page 19-141).
   - Yaw rate-lateral acceleration sensor 5P (see page 19-138).
   - SRS unit A (39P) (see page 24-221).
   - TPMS control unit (20P) (see page 18-83).
   - Navigation unit A (32P) (if equipped) (see page 23-240).
6. Check for continuity between ECM/PCM connector terminals A3 and A4.

ECM/PCM CONNECTOR A (49P)

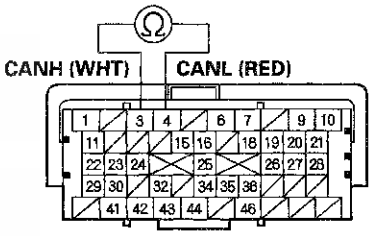

Terminal side of female terminals

Is there continuity?

YES—Repair short in the wires between ECM/PCM connector terminals A3 and A4. ■

NO—Go to step 7.

7. Connect ECM/PCM connector terminal A3 to body ground with a jumper wire.

ECM/PCM CONNECTOR A (49P)

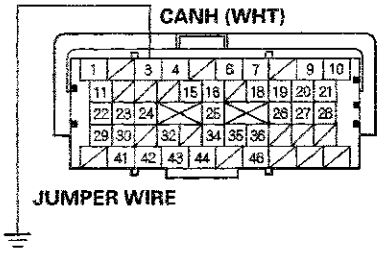

Terminal side of female terminals

8. Check for continuity between gauge control module 32P connector terminal No. 30 and body ground.

GAUGE CONTROL MODULE 32P CONNECTOR

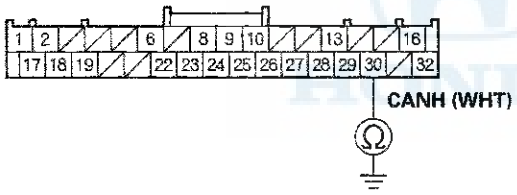

Wire side of female terminals

Is there continuity?

YES—Go to step 9.

NO—Repair open in the wire between the ECM/PCM (A3) and the gauge control module.■

9. Check for continuity between VSA modulator-control unit 36P connector terminal No. 14 and body ground.

VSA MODULATOR-CONTROL UNIT 36P CONNECTOR

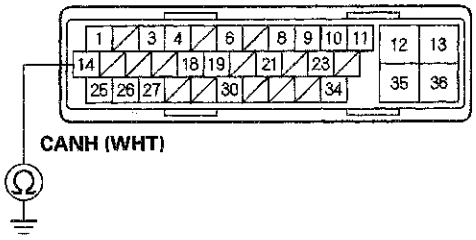

Wire side of female terminals

Is there continuity?

YES—Go to step 10.

NO—Repair open in the wire between the ECM/PCM (A3) and the VSA modulator-control unit.■

(cont'd)

F-CAN Circuit Troubleshooting (cont'd)

10. Connect ECM/PCM connector terminal A4 to body ground with a jumper wire.

ECM/PCM CONNECTOR A (49P)

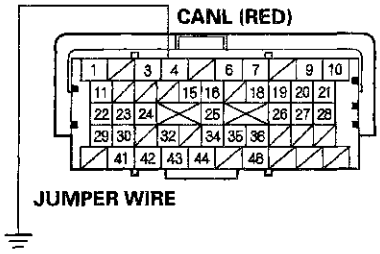

Terminal side of female terminals

11. Check for continuity between gauge control module 32P connector terminal No. 29 and body ground.

GAUGE CONTROL MODULE 32P CONNECTOR

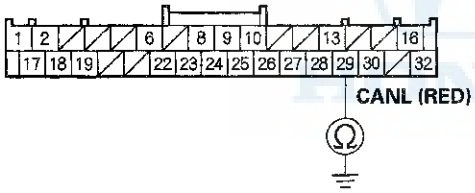

Wire side of female terminals

Is there continuity?

YES—Go to step 12.

NO—Repair open in the wire between the ECM/PCM (A4) and the gauge control module.■

12. Check for continuity between VSA modulator-control unit 36P connector terminal No. 1 and body ground.

VSA MODULATOR-CONTROL UNIT 36P CONNECTOR

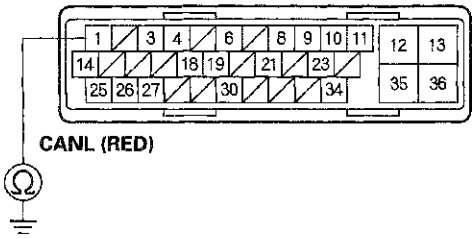

Wire side of female terminals

Is there continuity?

YES—Go to step 13.

NO—Repair open in the wire between the ECM/PCM (A4) and the VSA modulator-control unit.■

13. Remove the jumper wire from the ECM/PCM connector.

14. Reconnect the gauge control module 32P connector.

15. Measure the resistance between ECM/PCM connector terminals A3 and A4.

ECM/PCM CONNECTOR A (49P)

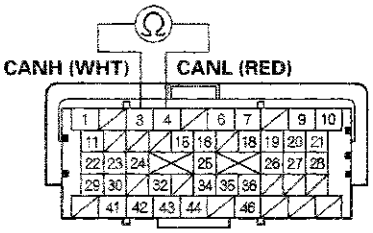

Terminal side of female terminals

Is there about 2.34 – 2.86 kΩ ?

YES—Go to step 16.

NO—Substitute a known-good gauge control module (see page 22-324), and reconnect ECM/PCM connector A. If the HDS identifies the vehicle, replace the original gauge control module (see page 22-324). ■

16. Disconnect the gauge control module 32P connector.

17. Reconnect the VSA modulator-control unit 36P connector.

18. Measure the resistance between ECM/PCM connector terminals A3 and A4.

ECM/PCM CONNECTOR A (49P)

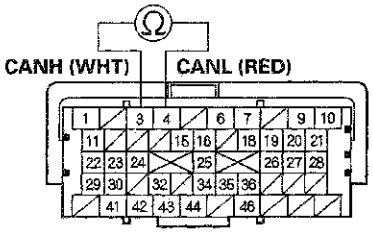

Terminal side of female terminals

Is there about 108– 132 Ω ?

YES—Go to step 19.

NO—Substitute a known-good VSA modulator-control unit (see page 19-141), and reconnect ECM/PCM connector A. If the HDS identifies the vehicle, replace the original VSA modulator-control unit (see page 19-141). ■

(cont'd)

F-CAN Circuit Troubleshooting (cont'd)

19. Disconnect the VSA modulator-control unit 36P connector.

20. Reconnect the yaw rate-lateral acceleration sensor 5P connector.

21. Measure the resistance between ECM/PCM connector terminals A3 and A4.

ECM/PCM CONNECTOR A (49P)

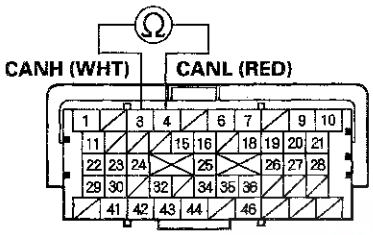

Terminal side of female terminals

Is there about 2.34–2.86 kΩ ?

YES—Go to step 22.

NO—Substitute a known-good yaw rate-lateral acceleration sensor (see page 19-138), and reconnect ECM/PCM connector A. If the HDS identifies the vehicle, replace the original yaw rate-lateral acceleration sensor (see page 19-138).■

22. Disconnect the yaw-rate lateral acceleration sensor 5P connector.

23. Reconnect SRS unit connector A (39P).

24. Measure the resistance between ECM/PCM connector terminals A3 and A4.

ECM/PCM CONNECTOR A (49P)

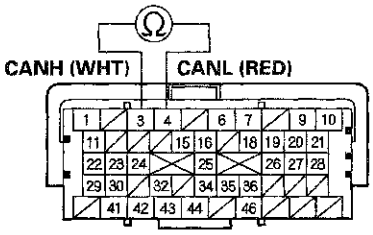

Terminal side of female terminals

Is there about 2.34–2.86 kΩ ?

YES—Go to step 25.

NO—Substitute a known-good SRS unit (see page 24-221), and reconnect ECM/PCM connector A. If the HDS identifies the vehicle, replace the original SRS unit (see page 24-221).■

25. Disconnect SRS unit connector A (39P).

26. Reconnect the TPMS control unit 20P connector.

27. Measure the resistance between ECM/PCM connector terminals A3 and A4 .

ECM/PCM CONNECTOR A (49P)

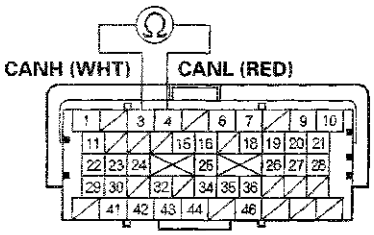

Terminal side of female terminals

Is there about 2.34–2.86 kΩ ?

YES—
- With navigation system: Go to step 28.
- Without navigation system: Update the ECM/PCM if it does not have the latest software (see page 11-215), or substitute a known-good ECM/PCM (see page 11-7), then recheck. If the HDS identifies the vehicle with a known-good ECM/PCM, replace the original ECM/PCM (see page 11-216). ■

NO—Substitute a known-good TPMS control unit (see page 18-83), and reconnect ECM/PCM connector A. If the HDS identifies the vehicle, replace the original TPMS control unit (see page 18-83). ■

28. Disconnect the TPMS control unit 20P connector.

29. Reconnect navigation unit connector A (32P).

30. Measure the resistance between ECM/PCM connector terminals A3 and A4.

ECM/PCM CONNECTOR A (49P)

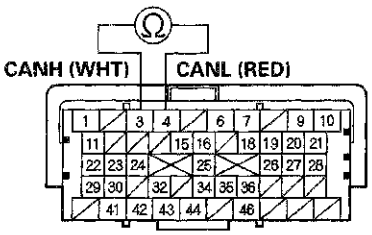

Terminal side of female terminals

Is there about 2.34–2.86 kΩ ?

YES—Update the ECM/PCM if it does not have the latest software (see page 11-215), or substitute a known-good ECM/PCM (see page 11-7), then recheck. If the HDS identifies the vehicle with a known-good ECM/PCM, replace the original ECM/PCM (see page 11-216). ■

NO—Substitute a known-good navigation unit (see page 23-240), and reconnect ECM/PCM connector A. If the HDS identifies the vehicle, replace the original navigation unit (see page 23-240). ■

(cont'd)

F-CAN Circuit Troubleshooting (cont'd)

31. Disconnect these connectors:

    - Gauge control module 32P (see page 22-324).
    - VSA modulator-control unit 36P (see page 19-141).
    - Yaw rate-lateral acceleration sensor 5P (see page 19-138).
    - SRS unit A (39P) (see page 24-221).
    - TPMS control unit (20P) (see page 18-83).
    - Navigation unit A (32P) (if equipped) (see page 23-240).

32. Check for continuity between ECM/PCM connector terminal A3 and body ground.

ECM/PCM CONNECTOR A (49P)

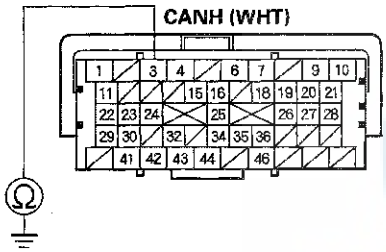

Terminal side of female terminals

Is there continuity?

YES—Repair short in the wire between the ECM/PCM (A3) and the gauge control module, the VSA modulator-control unit, the yaw rate-lateral acceleration sensor, the SRS unit, the TPMS control unit, the navigation unit, or the DLC. ■

NO—Go to step 33.

33. Check for continuity between ECM/PCM connector terminal A4 and body ground.

ECM/PCM CONNECTOR A (49P)

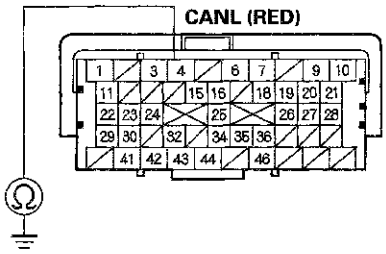

Terminal side of female terminals

Is there continuity?

YES—Repair short in the wire between the ECM/PCM (A4) and the gauge control module, the VSA modulator-control unit, the yaw rate-lateral acceleration sensor, the SRS unit, the TPMS control unit, the navigation unit, or the DLC. ■

NO—Go to step 34.

34. Reconnect all connectors.

35. Connect the HDS to the DLC (see page 11-3).

36. Disconnect the gauge control module 32P connector.

37. Turn the ignition switch to ON (II), and read the HDS.

    Does the HDS identify the vehicle?

    YES—Replace the gauge control module (see page 22-324). ■

    NO—Go to step 38.

38. Turn the ignition switch to LOCK (0).

39. Reconnect the gauge control module 32P connector.

40. Disconnect the VSA modulator-control unit 36P connector.

41. Turn the ignition switch to ON (II), and read the HDS.

    Does the HDS identify the vehicle?

    YES—Replace the VSA modulator-control unit (see page 19-141). ■

    NO—Go to step 42.

42. Turn the ignition switch to LOCK (0).

43. Reconnect the VSA modulator-control unit 36P connector.

44. Disconnect the yaw rate-lateral acceleration sensor 5P connector.

45. Turn the ignition switch to ON (II), and read the HDS.

    Does the HDS identify the vehicle?

    YES—Replace the yaw rate-lateral acceleration sensor (see page 19-138). ■

    NO—Go to step 46.

46. Turn the ignition switch to LOCK (0).

47. Reconnect the yaw rate-lateral acceleration sensor 5P connector.

48. Disconnect SRS unit connector A (39P).

49. Turn the ignition switch to ON (II), and read the HDS.

    Does the HDS identify the vehicle?

    YES—Replace the SRS unit (see page 24-221). ■

    NO—Go to step 50.

(cont'd)

F-CAN Circuit Troubleshooting (cont'd)

50. Turn the ignition switch to LOCK (0).

51. Reconnect SRS unit connector A (39P).

52. Disconnect the TPMS control unit 20P connector.

53. Turn the ignition switch to ON (II), and read the HDS.

    Does the HDS identify the vehicle?

    YES—Replace the TPMS control unit (see page 18-83).■

    NO—
    - With navigation system: Go to step 54.
    - Without navigation system: Update the ECM/PCM if it does not have the latest software (see page 11-215), or substitute a known-good ECM/PCM (see page 11-7), then recheck. If the HDS identifies the vehicle with a known-good ECM/PCM, replace the original ECM/PCM (see page 11-216).■

54. Turn the ignition switch to LOCK (0).

55. Reconnect the TPMS control unit 20P connector.

56. Disconnect navigation unit connector A (32P).

57. Turn the ignition switch to ON (II), and read the HDS.

    Does the HDS identify the vehicle?

    YES—Replace the navigation unit (see page 23-240).■

    NO—Update the ECM/PCM if it does not have the latest software (see page 11-215), or substitute a known-good ECM/PCM (see page 11-7), then recheck. If the HDS identifies the vehicle with a known-good ECM/PCM, replace the original ECM/PCM (see page 11-216).■

MIL Circuit Troubleshooting

1. Turn the ignition switch to ON (II).

2. Do the gauge self-diagnostic function (see page 22-304).

   Does the MIL indicator flash?

   YES—Go to step 3.

   NO—Substitute a known-good gauge control module, and recheck. If the symptom/indication goes away with a known-good gauge control module, replace the original gauge control module (see page 22-324).■

3. Connect the HDS to the DLC (see page 11-3).

4. Check the SCS in the DATA LIST with the HDS.

   Is a short indicated?

   YES—Go to step 5.

   NO—Update the ECM/PCM if it does not have the latest software (see page 11-215), or substitute a known-good ECM/PCM (see page 11-7), then recheck. If the symptom/indication goes away with a known-good ECM/PCM, replace the original ECM/PCM (see page 11-216).■

5. Turn the ignition switch to LOCK (0).

6. Disconnect ECM/PCM connector A (49P), then disconnect the HDS.

7. Check for continuity between ECM/PCM connector terminal A32 and body ground.

ECM/PCM CONNECTOR A (49P)

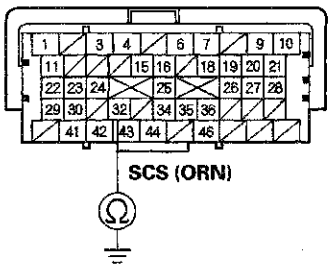

Terminal side of female terminals

Is there continuity?

YES—Repair short in the wire between the ECM/PCM (A32) and the DLC.■

NO—Update the ECM/PCM if it does not have the latest software (see page 11-215), or substitute a known-good ECM/PCM (see page 11-7), then recheck. If the symptom/indication goes away with a known-good ECM/PCM, replace the original ECM/PCM (see page 11-216).■

DLC Circuit Troubleshooting

NOTE: Make sure the HDS and the HDS DLC cable are not defective.

1. Turn the ignition switch to LOCK (0).

2. Connect the HDS to the DLC (see page 11-3).

   NOTE: Make sure the HDS is properly connected to the DLC.

3. Turn the ignition switch to ON (II), and read the HDS.

   Does the HDS identify the vehicle?

   YES—Go to step 4.

   NO—Go to step 21.

4. Check for Temporary DTCs or DTCs in the PGM-FI system with the HDS.

   Are any Temporary DTCs or DTCs indicated?

   YES—Go to the indicated DTC's troubleshooting. ■

   NO—
   - If the HDS does not communicate with the SRS system, go to step 5.
   - If the HDS does not communicate with the VSA system, go to step 7.
   - If the HDS does not communicate with the TPMS system, go to step 9.
   - If the HDS does not communicate with the IMMOBI (immobilizer) system, go to step 11.
   - If the HDS does not communicate with the BODY ELECTRICAL system, go to step 13.

5. Turn the ignition switch to LOCK (0).

6. Turn the ignition switch to ON (II), and watch the SRS indicator.

   Does the SRS indicator stay on?

   YES—Go to the SRS system's general troubleshooting information (see page 24-34). ■

   NO—Go to step 15.

7. Turn the ignition switch to LOCK (0).

8. Turn the ignition switch to ON (II), and watch the VSA indicator.

   Does the VSA indicator stay on?

   YES—Go to the VSA system's general troubleshooting information (see page 19-46). ■

   NO—Go to step 15.

9. Turn the ignition switch to LOCK (0).

10. Turn the ignition switch to ON (II), and watch the TPMS indicator.

    Does the TPMS indicator stay on?

    YES—Go to the TPMS general troubleshooting information (see page 18-57). ■

    NO—Go to step 15.

11. Turn the ignition switch to LOCK (0).

12. Turn the ignition switch to ON (II), and watch the immobilizer indicator.

    Does the immobilizer indicator stay on or flash?

    YES—Go to the immobilizer system's troubleshooting (see page 22-392).■

    NO—Go to step 13.

13. Do the gauge self-diagnostic function (see page 22-304).

14. Check the gauge display.

    Is Error 2 indicated?

    YES—Check for B-CAN system DTCs (see page 22-96).■

    NO—Go to step 15.

15. Turn the ignition switch to LOCK (0).

16. Disconnect the HDS from the DLC.

17. Check for continuity between DLC terminal No. 7 and body ground.

DATA LINK CONNECTOR (DLC)

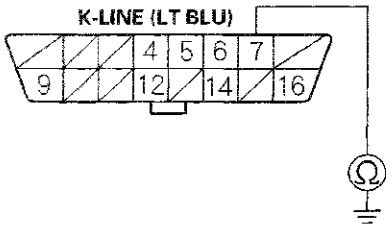

Terminal side of female terminals

Is there continuity?

YES—Go to step 18.

NO—Go to step 19.

18. Continue to check for continuity between DLC terminal No. 7 and body ground while disconnecting these connectors, one at a time:

    - SRS unit connector A (39P)
    - VSA modulator-control unit 36P connector
    - TPMS control unit 20P connector
    - Immobilizer-keyless control unit 7P connector
    - Audio unit connector A (24P)
    - Driver's under-dash fuse/relay box connector Q (20P)

    Does continuity go away when one of the above connectors is disconnected?

    YES—Replace the part that caused an open when it was disconnected.■

    NO—Repair short in the wire between the DLC (K-line) and the VSA modulator-control unit, the SRS unit, the TPMS control unit, the immobilizer-keyless control unit, the audio unit, or the driver's under-dash fuse/relay box.■

(cont'd)

DLC Circuit Troubleshooting (cont'd)

19. Connect DLC terminal No. 7 to body ground with a jumper wire.

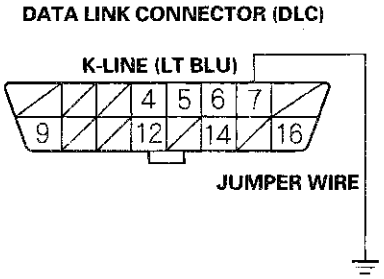

Terminal side of female terminals

20. Check for continuity between body ground and these connector terminals:

Connector	Terminal
SRS unit A (39P)	No. 18 (LT BLU)
VSA modulator-control unit 36P	No. 3 (LT BLU)
TPMS control unit 20P	No. 7 (LT BLU)
Immobilizer-keyless control unit 7P	No. 5 (LT BLU)
Audio unit A (24P)	No. 3 (LT BLU)
Driver's under-dash fuse/ relay box Q (20P)	No. 16 (LT BLU)

Is there continuity between the body ground and each of the terminals in the chart?

YES—Replace the part that does not communicate with the HDS.■

NO—Repair open in the wire between the DLC (K-line) and the appropriate connector.■

21. Check for B-CAN system DTCs without the HDS (see page 22-125).

Is DTC U0029 and/or U0100 indicated?

YES—Go to step 34.

NO—Go to step 22.

22. Turn the ignition switch to LOCK (0).

23. Disconnect the HDS from the DLC.

24. Measure the voltage between DLC terminal No. 16 and body ground.

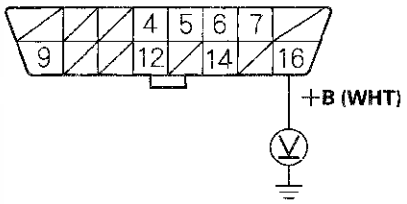

Terminal side of female terminals

Is there battery voltage?

YES—Go to step 25.

NO—Repair open in the wire between DLC terminal No. 16 and the No. 15 BACK UP (10 A) fuse in the under-hood fuse/relay box.■

25. Measure the voltage between DLC terminals No. 4 and No. 16.

DATA LINK CONNECTOR (DLC)

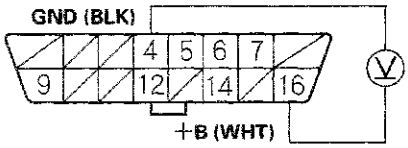

Terminal side of female terminals

Is there battery voltage?

YES—Go to step 26.

NO—Repair open in the wire between DLC terminal No. 4 and body ground (G502) (see page 22-34).■

26. Connect the HDS to the DLC (see page 11-3).

27. Jump the SCS line with the HDS.

28. Disconnect ECM/PCM connector A (49P).

29. Disconnect the HDS from the DLC.

30. Connect DLC terminal No. 6 to body ground with a jumper wire.

DATA LINK CONNECTOR (DLC)

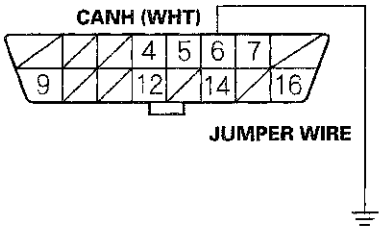

Terminal side of female terminals

31. Check for continuity between ECM/PCM connector terminal A3 and body ground.

ECM/PCM CONNECTOR A (49P)

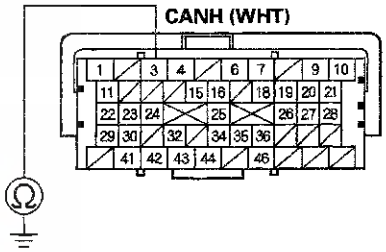

Terminal side of female terminals

Is there continuity?

YES—Go to step 32.

NO—Repair open in the wire between the ECM/PCM (A3) and DLC terminal No. 6.■

(cont'd)

DLC Circuit Troubleshooting (cont'd)

32. Connect DLC terminal No. 14 to body ground with a jumper wire.

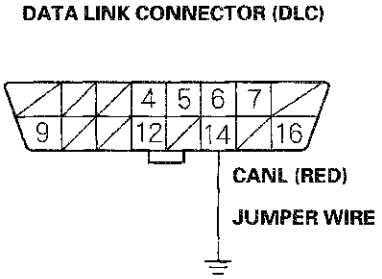

Terminal side of female terminals

33. Check for continuity between ECM/PCM connector terminal A4 and body ground.

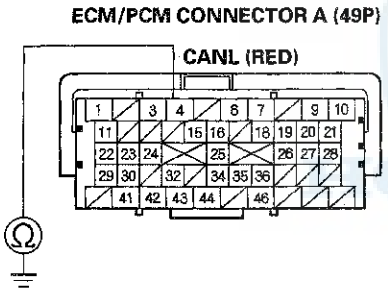

Terminal side of female terminals

Is there continuity?

YES—Update the ECM/PCM if it does not have the latest software (see page 11-215), or substitute a known-good ECM/PCM (see page 11-7), then recheck. If the symptom/indication goes away with a known-good ECM/PCM, replace the original ECM/PCM (see page 11-216).■

NO—Repair open in the wire between the ECM/PCM (A4) and DLC terminal No. 14.■

34. Try to start the engine.

Does the engine start and idle smoothly?

YES—Go to the F-CAN circuit troubleshooting (see page 11-182).■

NO—Go to step 35.

35. Turn the ignition switch to LOCK (0).

36. Check the No. 3 IG MAIN (50 A) fuse in the under-hood fuse/relay box.

Is the fuse OK?

YES—Repair open in the wire between the No. 3 IG MAIN (50 A) fuse and the ignition switch. If the wire is OK, go to step 37.

NO—Repair short in the wire between the No. 3 IG MAIN (50 A) fuse and the ignition switch. Also replace the No. 3 IG MAIN (50 A) fuse.■

37. Inspect the No. 17 FI MAIN (15 A) fuse in the under-hood fuse/relay box.

Is the fuse OK?

YES—Go to step 44.

NO—Go to step 38.

38. Remove the blown No. 17 FI MAIN (15 A) fuse from the under-hood fuse/relay box.

39. Remove PGM-FI main relay 1 (A) from the under-hood fuse/relay box.

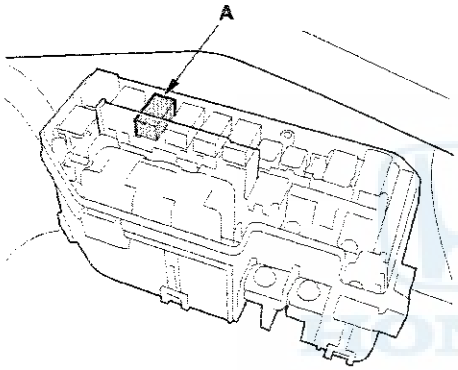

40. Check for continuity between body ground and PGM-FI main relay 1 4P connector terminals No. 1 and No. 4 individually.

PGM-FI MAIN RELAY 1 4P CONNECTOR

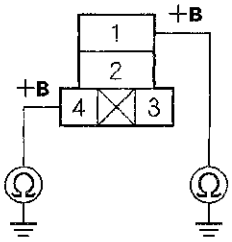

Terminal side of female terminals

Is there continuity?

YES—Replace the under-hood fuse/relay box (see page 22-83). Also replace the No. 17 FI MAIN (15 A) fuse.■

NO—Go to step 41.

(cont'd)

DLC Circuit Troubleshooting (cont'd)

41. While disconnecting each of the parts or connectors below, one at a time, check for continuity between PGM-FI main relay 1 4P connector terminal No. 2 and body ground:

    - PGM-FI main relay 2 (FUEL PUMP)
    - ECM/PCM connector A (49P)
    - Each injector 2P connector
    - Camshaft position (CMP) sensor B 3P connector
    - Crankshaft position (CKP) sensor 3P connector
    - MAF sensor/IAT sensor 5P connector
    - Electronic throttle control system (ETCS) control relay

PGM-FI MAIN RELAY 1 4P CONNECTOR

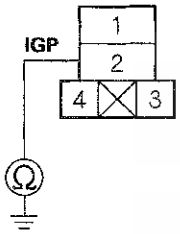

Terminal side of female terminals

Does continuity go away when one of the above parts or connectors is disconnected?

YES—Replace the part that made the short to body ground go away when disconnected. If the part is the ECM/PCM, update the ECM/PCM if it does not have the latest software (see page 11-215), or substitute a known-good ECM/PCM (see page 11-7), then recheck. If the symptom/indication goes away with a known-good ECM/PCM, replace the original ECM/PCM (see page 11-216). Also replace the No. 17 FI MAIN (15 A) fuse.■

NO—Go to step 42.

42. Disconnect these parts or connectors:

    - PGM-FI main relay 2 (FUEL PUMP)
    - ECM/PCM connector A (49P)
    - Injectors
    - Camshaft position (CMP) sensor B
    - MAF sensor/IAT sensor
    - Crankshaft position (CKP) sensor
    - Electronic throttle control system (ETCS) control relay

43. Check for continuity between PGM-FI main relay 1 4P connector terminal No. 2 and body ground.

PGM-FI MAIN RELAY 1 4P CONNECTOR

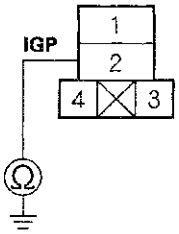

Terminal side of female terminals

Is there continuity?

YES—Repair short in the wire between PGM-FI main relay 1 and each part. Also replace the No. 17 FI MAIN (15 A) fuse.■

NO—Replace PGM-FI main relay 1. Also replace the No. 17 FI MAIN (15 A) fuse.■

44. Inspect the No. 9 FUEL PUMP (20 A) fuse in the driver's under-dash fuse/relay box.

    Is the fuse OK?

    YES—Go to step 56.

    NO—Go to step 45.

45. Remove the blown No. 9 FUEL PUMP (20 A) fuse from the driver's under-dash fuse/relay box.

46. Remove PGM-FI main relay 2 (FUEL PUMP) (A) from the driver's under-dash fuse/relay box.

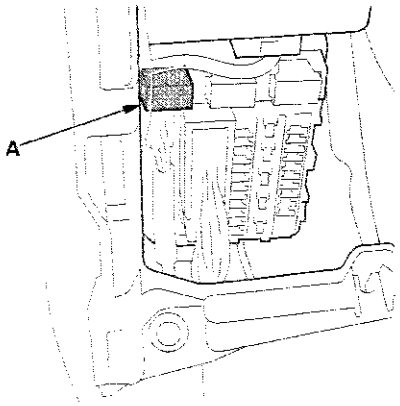

47. Test PGM-FI main relay 2 (FUEL PUMP) (see page 22-91).

Is the relay OK?

YES—Go to step 48.

NO—Replace PGM-FI main relay 2 (FUEL PUMP). Also replace the No. 9 FUEL PUMP (20 A) fuse.■

48. Check for continuity between PGM-FI main relay 2 (FUEL PUMP) 4P connector terminal No. 2 and body ground.

PGM-FI MAIN RELAY 2 (FUEL PUMP) 4P CONNECTOR

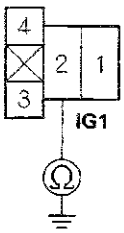

Terminal side of female terminals

Is there continuity?

YES—Go to step 49.

NO—Go to step 52.

49. Jump the SCS line with the HDS.

50. Disconnect ECM/PCM connector C (49P).

51. Check for continuity between ECM/PCM connector terminal C10 and body ground.

ECM/PCM CONNECTOR C (49P)

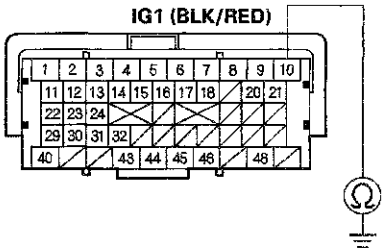

Terminal side of female terminals

Is there continuity?

YES—Repair short in the wire between the No. 9 FUEL PUMP (20 A) fuse and the ECM/PCM (C10), between the No. 9 FUEL PUMP (20 A) fuse and PGM-FI main relay 2 (FUEL PUMP), or between the No. 9 FUEL PUMP (20 A) fuse and the immobilizer control unit. Also replace the No. 9 FUEL PUMP (20 A) fuse.■

NO—Replace the No. 9 FUEL PUMP (20 A) fuse, and update the ECM/PCM if it does not have the latest software (see page 11-215), or substitute a known-good ECM/PCM (see page 11-7), then recheck. If the symptom/indication goes away with a known-good ECM/PCM, replace the original ECM/PCM (see page 11-216).■

(cont'd)

DLC Circuit Troubleshooting (cont'd)

52. Remove the rear seat cushion (see page 20-225).

53. Remove the access panel from the floor (see page 11-347).

54. Disconnect the fuel pump 4P connector.

55. Check for continuity between fuel pump 4P connector terminal No. 2 and body ground.

FUEL PUMP 4P CONNECTOR

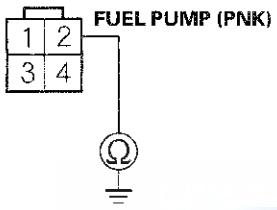

Wire side of female terminals

Is there continuity?

YES—Repair short in the wire between the fuel pump and PGM-FI main relay 2 (FUEL PUMP). Also replace the No. 9 FUEL PUMP (20 A) fuse. ■

NO—Check the fuel pump, and replace it if necessary (see page 11-351). Also replace the No. 9 FUEL PUMP (20 A) fuse. ■

56. Jump the SCS line with the HDS.

57. Disconnect ECM/PCM connectors A (49P) and C (49P).

58. Turn the ignition switch to ON (II).

59. Measure the voltage between ECM/PCM connector terminal C10 and body ground.

ECM/PCM CONNECTOR C (49P)

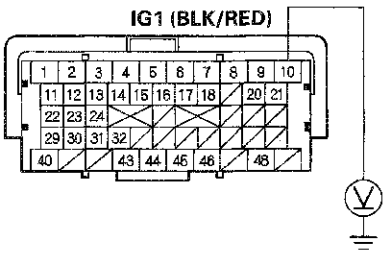

Terminal side of female terminals

Is there battery voltage?

YES—Go to step 60.

NO—Repair open in the wire between the No. 9 FUEL PUMP (20 A) fuse and the ECM/PCM (C10). ■

60. Measure the voltage between ECM/PCM connector terminal A7 and body ground.

ECM/PCM CONNECTOR A (49P)

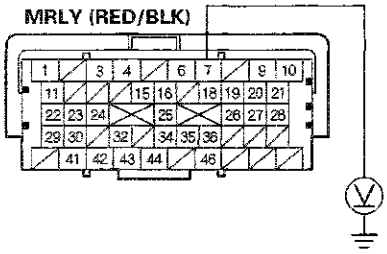

Terminal side of female terminals

Is there battery voltage?

YES—Go to step 65.

NO—Go to step 61.

61. Turn the ignition switch to LOCK (0).

62. Remove PGM-FI main relay 1 (A) from the under-hood fuse/relay box.

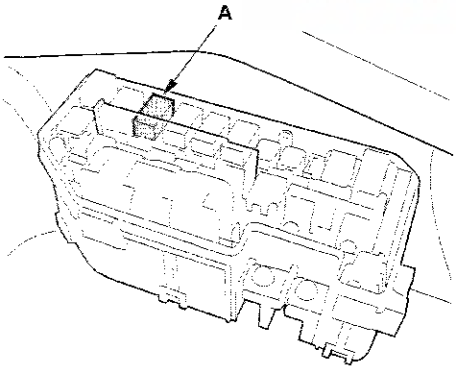

63. Measure the voltage between PGM-FI main relay 1 4P connector terminal No. 4 and body ground.

PGM-FI MAIN RELAY 1 4P CONNECTOR

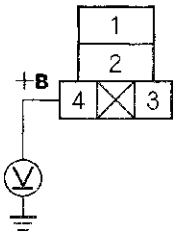

Terminal side of female terminals

Is there battery voltage?

YES—Go to step 64.

NO—Replace the under-hood fuse/relay box (see page 22-83). ■

(cont'd)

DLC Circuit Troubleshooting (cont'd)

64. Check for continuity between PGM-FI main relay 1 4P connector terminal No. 3 and ECM/PCM connector terminal A7.

PGM-FI MAIN RELAY 1 4P CONNECTOR

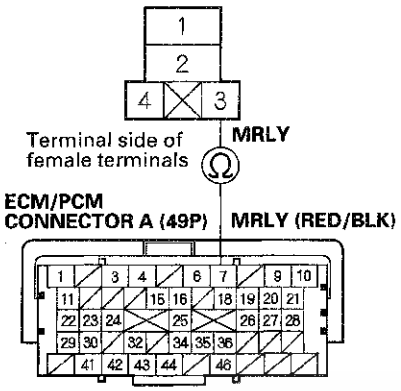

Terminal side of female terminals

Is there continuity?

YES—Test PGM-FI main relay 1 (see page 22-91). If the relay is OK, update the ECM/PCM if it does not have the latest software (see page 11-215), or substitute a known-good ECM/PCM (see page 11-7), then recheck. If the symptom/indication goes away with a known-good ECM/PCM, replace the original ECM/PCM (see page 11-216).■

NO—Repair open in the wire between the ECM/PCM (A7) and PGM-FI main relay 1.■

65. Turn the ignition switch to LOCK (0).

66. Remove PGM-FI main relay 1 (A) from the under-hood fuse/relay box.

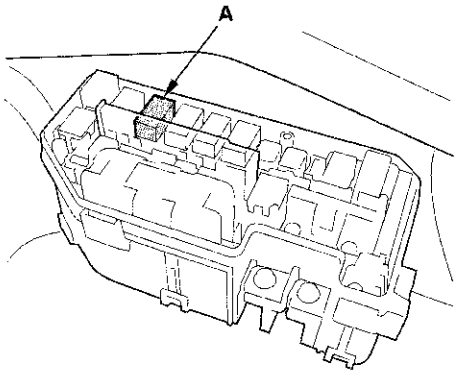

67. Measure the voltage between PGM-FI main relay 1 4P connector terminal No. 1 and body ground.

PGM-FI MAIN RELAY 1 4P CONNECTOR

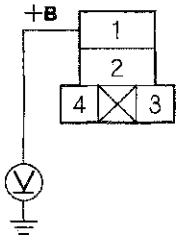

Terminal side of female terminals

Is there battery voltage?

YES—Go to step 68.

NO—Replace the under-hood fuse/relay box (see page 22-83).■

68. Check for continuity between PGM-FI main relay 1 4P connector terminal No. 2 and ECM/PCM connector terminal A9.

PGM-FI MAIN RELAY 1 4P CONNECTOR

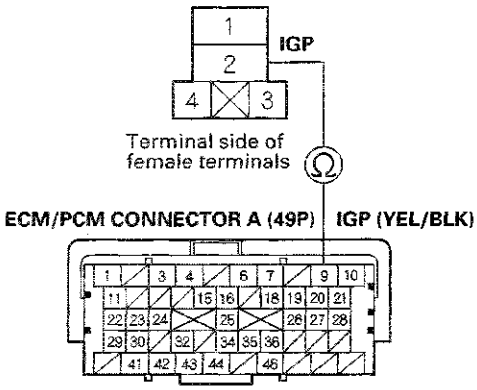

Terminal side of female terminals

Is there continuity?

YES—Go to step 69.

NO—Repair open in the wire between the ECM/PCM (A9) and PGM-FI main relay 1.■

69. Test PGM-FI main relay 1 (see page 22-91).

Is PGM-FI main relay 1 OK?

YES—Go to step 70.

NO—Replace PGM-FI main relay 1.■

70. Disconnect ECM/PCM connector B (49P).

71. Check for continuity between body ground and ECM/PCM connector terminals B1, B10, C2, C44, and C48 individually.

ECM/PCM CONNECTORS

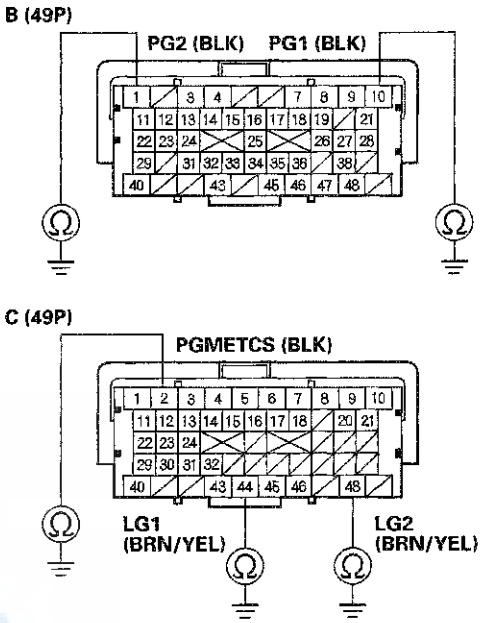

Terminal side of female terminals

Is there continuity?

YES—Go to step 72.

NO—Repair open in the wire between the ECM/PCM (B1, B10, C2, C44, C48) and G101 (see page 22-20).■

(cont'd)

DLC Circuit Troubleshooting (cont'd)

72. Check for continuity between ECM/PCM connector terminal C13 and body ground.

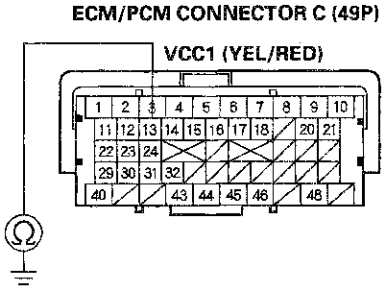

Terminal side of female terminals

Is there continuity?

YES—Go to step 73.

NO—
- A/T: Go to step 74.
- M/T: Go to step 76.

73. Continue to check for continuity between ECM/PCM connector terminal C13 and body ground, while disconnecting these connectors, one at a time:

- MAP sensor 3P connector
- Output shaft (countershaft) speed sensor 3P connector

Does continuity go away when one of the above connectors is disconnected?

YES—Replace the part that caused continuity to go away when it was disconnected. ■

NO—Repair short in the wire between the ECM/PCM (C13) and the MAP sensor or the output shaft (countershaft) speed sensor. ■

74. Check for continuity between ECM/PCM connector terminal B19 and body ground.

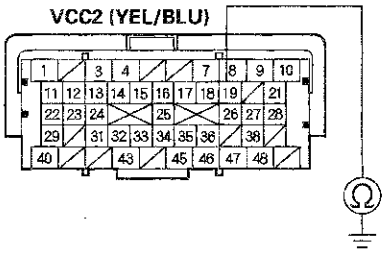

Terminal side of female terminals

Is there continuity?

YES—Go to step 75.

NO—Go to step 76.

75. Continue to check for continuity between ECM/PCM connector terminal B19 and body ground while disconnecting the input shaft (mainshaft) speed sensor 3P connector.

Is there continuity?

YES—Repair short in the wire between the ECM/PCM (B19) and the input shaft (mainshaft) speed sensor. ■

NO—Replace the input shaft (mainshaft) speed sensor (see page 14-226).

76. Check for continuity between ECM/PCM connector terminal C12 and body ground.

ECM/PCM CONNECTOR C (49P)

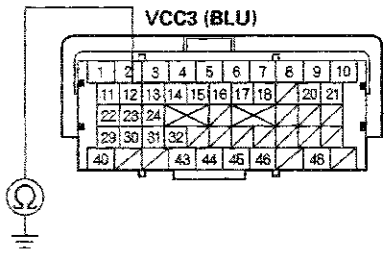

Terminal side of female terminals

Is there continuity?

YES—Go to step 77.

NO—Go to step 78.

77. Continue to check for continuity between ECM/PCM connector terminal C12 and body ground while disconnecting the throttle body 6P connector.

Is there continuity?

YES—Repair short in the wire between the ECM/PCM (C12) and the throttle body. ■

NO—Replace the throttle body (see page 11-362). ■

78. Check for continuity between ECM/PCM connector terminal A26 and body ground.

ECM/PCM CONNECTOR A (49P)

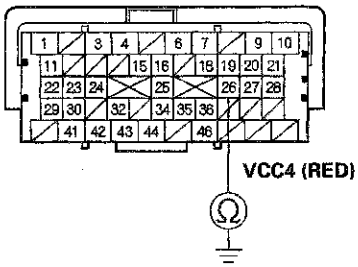

Terminal side of female terminals

Is there continuity?

YES—Go to step 79.

NO—Go to step 80.

79. Continue to check for continuity between ECM/PCM connector terminal A26 and body ground while disconnecting the APP sensor 6P connector.

Is there continuity?

YES—Repair short in the wire between the ECM/PCM (A26) and the APP sensor. ■

NO—Replace the accelerator pedal module (see page 11-259). ■

(cont'd)

DLC Circuit Troubleshooting (cont'd)

80. Check for continuity between ECM/PCM connector terminal A25 and body ground.

ECM/PCM CONNECTOR A (49P)

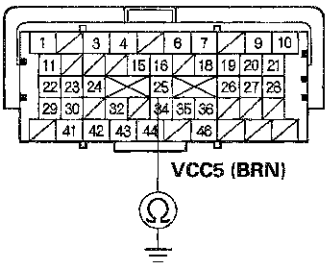

Terminal side of female terminals

Is there continuity?

YES—Go to step 81.

NO—Go to step 82.

81. Continue to check for continuity between ECM/PCM connector terminal A25 and body ground while disconnecting the APP sensor 6P connector.

Is there continuity?

YES—Repair short in the wire between the ECM/PCM (A25) and the APP sensor. ■

NO—Replace the accelerator pedal module (see page 11-259). ■

82. Check for continuity between ECM/PCM connector terminal A20 and body ground.

ECM/PCM CONNECTOR A (49P)

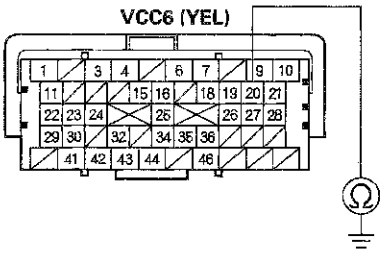

Terminal side of female terminals

Is there continuity?

YES—Go to step 83.

NO—Update the ECM/PCM if it does not have the latest software (see page 11-215), or substitute a known-good ECM/PCM (see page 11-7), then recheck. If the symptom/indication goes away with a known-good ECM/PCM, replace the original ECM/PCM (see page 11-216). ■

83. Continue to check for continuity between ECM/PCM connector terminal A19 and body ground while disconnecting the FTP sensor 3P connector.

Is there continuity?

YES—Repair short in the wire between the ECM/PCM (A20) and the FTP sensor. ■

NO—Replace the FTP sensor (see page 11-404).

Injector Replacement

1. Relieve the fuel pressure (see page 11-332).
2. Remove the engine cover.
3. Disconnect the quick-connect fitting (A).

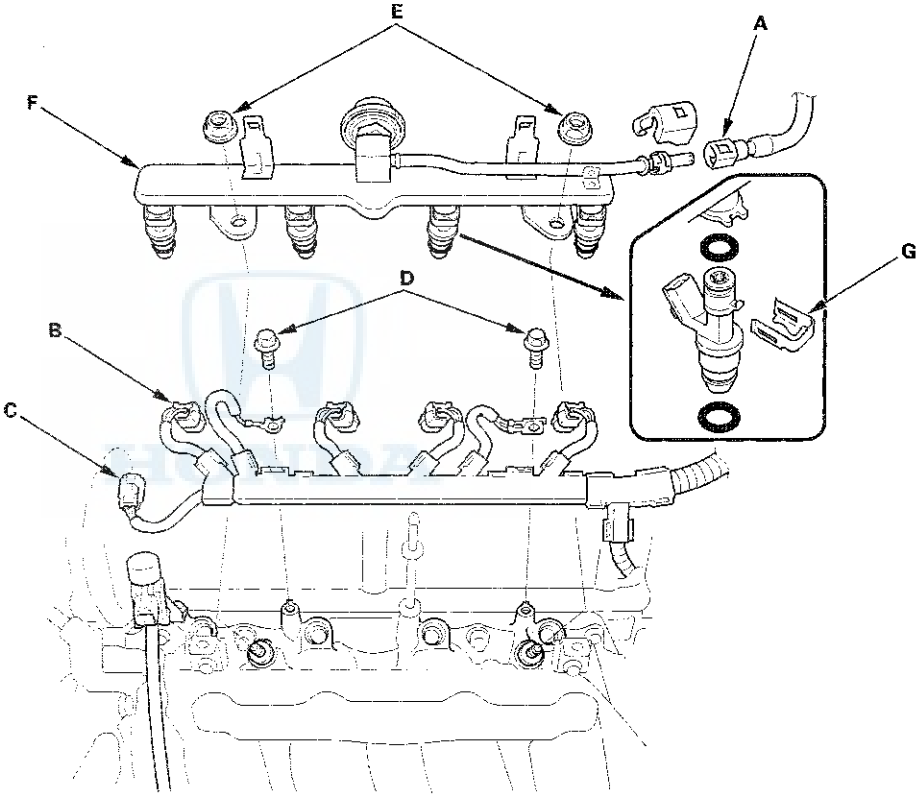

4. Disconnect the injector connectors (B) and the engine mount control solenoid valve connector (C).
5. Remove the ground cable bolts (G101 and G102) (D).
6. Remove the fuel rail mounting nuts (E) from the fuel rail (F).
7. Remove the fuel rail and the injectors from the injector base.
8. Remove the injector clips (G) from the fuel rail.
9. Remove the injectors from the fuel rail.

(cont'd)

Injector Replacement (cont'd)

10. Coat the new O-rings (black) (A) with clean engine oil, and insert the injectors (B) into the fuel rail (C).

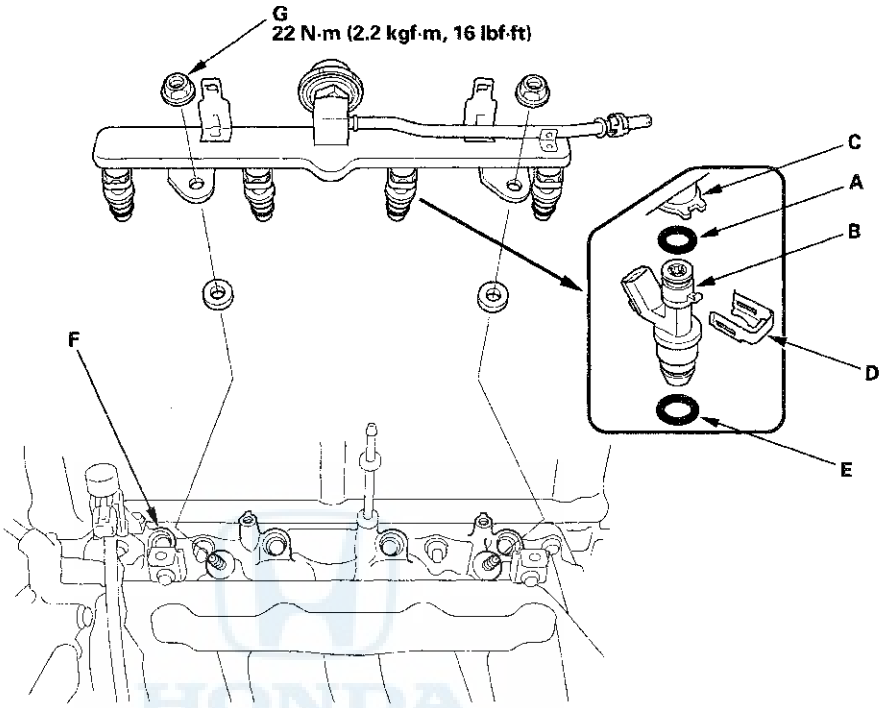

11. Install the injector clips (D).
12. Coat the new injector O-rings (brown) (E) with clean engine oil.
13. Install the fuel rail and the injectors in the injector base (F).
14. Install the fuel rail mounting nuts (G) and the ground cable bolts (G101 and G102).
15. Connect the injector connectors and the engine mount control solenoid valve connector.
16. Connect the quick-connect fitting.
17. Turn the ignition switch to ON (II), but do not operate the starter. After the fuel pump runs for about 2 seconds, the fuel rail will be pressurized. Repeat this two or three times, then check for fuel leakage.
18. Reinstall the engine cover.

A/F Sensor Replacement

Special Tools Required
O2 sensor wrench, Snap-on S6176 or equivalent, commercially available

1. Disconnect the A/F sensor 4P connector (A), then remove the A/F sensor (B).

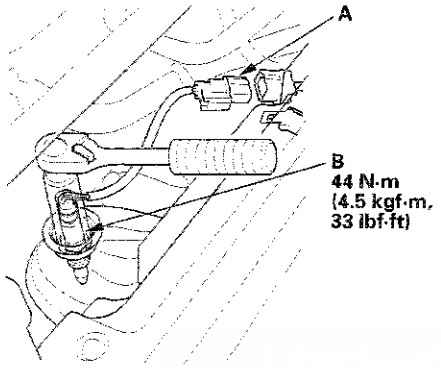

2. Install the parts in the reverse order of removal.

Secondary HO2S Replacement

Special Tools Required
O2 sensor wrench, Snap-on S6176 or equivalent, commercially available

1. Disconnect the secondary HO2S 4P connector (A), then remove the secondary HO2S (B).

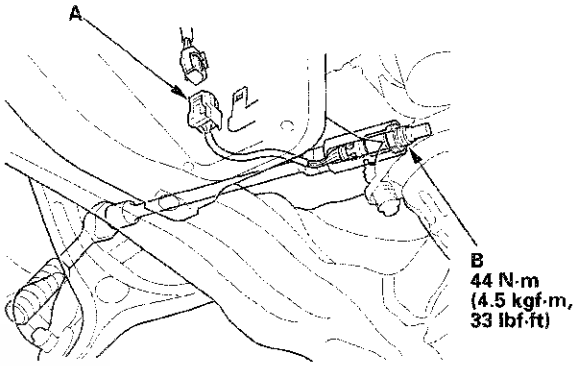

2. Install the parts in the reverse order of removal.

CMP Sensor B Replacement

1. Disconnect the connector (A) and hoses (B) from the EVAP canister purge valve (C), then remove the EVAP canister purge valve assembly.

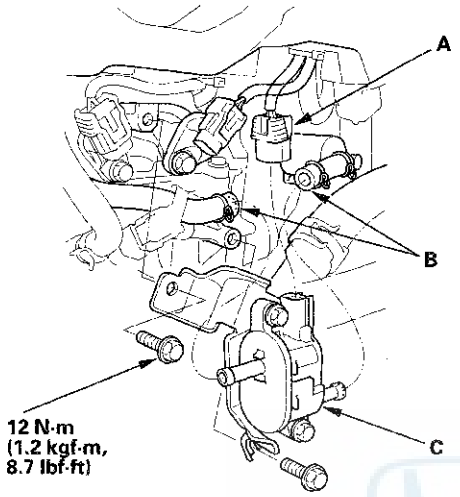

2. Disconnect the CMP sensor B connector (A).

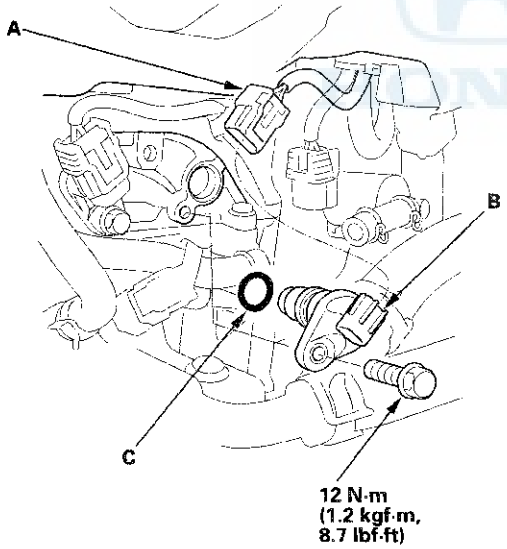

3. Remove CMP sensor B (B).

4. Install the parts in the reverse order of removal with a new O-ring (C).

CKP Sensor Replacement

1. Lift the vehicle, and support it with jackstands.

2. Remove the CKP sensor cover (A).

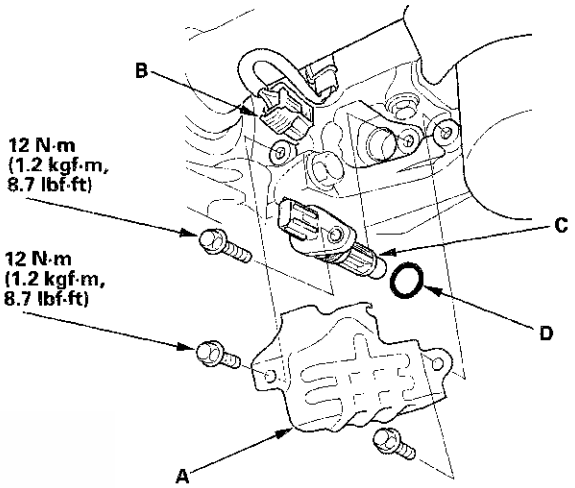

3. Disconnect the CKP sensor connector (B).

4. Remove the CKP sensor (C).

5. Install the parts in the reverse order of removal with a new O-ring (D).

6. Do the CKP pattern clear/CKP pattern learn procedure (see page 11-5).

MAP Sensor Replacement

1. Disconnect the MAP sensor connector (A).

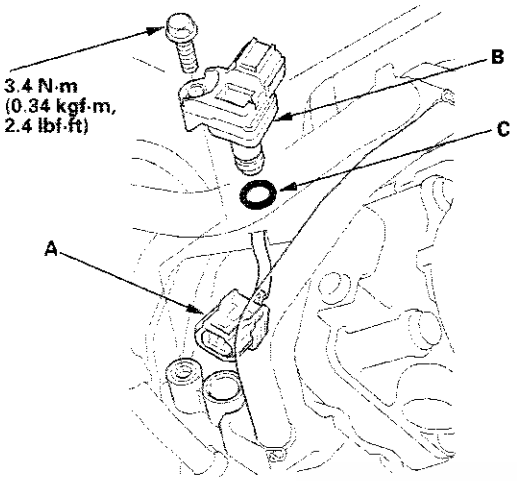

2. Remove the MAP sensor (B).

3. Install the parts in the reverse order of removal with a new O-ring (C).

MAF Sensor/IAT Sensor Replacement

1. Disconnect the MAF sensor/IAT sensor connector (A).

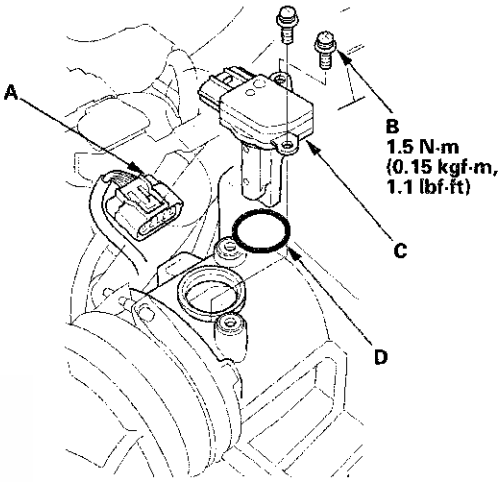

2. Remove the screws (B).

3. Remove the MAF sensor/IAT sensor (C).

4. Install the parts in the reverse order of removal with a new O-ring (D).

ECT Sensor 1 Replacement

1. Drain the engine coolant (see page 10-6).
2. Disconnect the ECT sensor 1 connector (A).

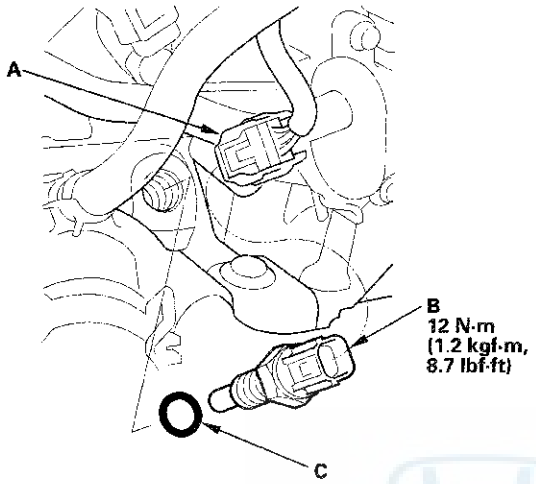

3. Remove ECT sensor 1 (B).
4. Install the parts in the reverse order of removal with a new O-ring (C), then refill the radiator with engine coolant (see page 10-6).

ECT Sensor 2 Replacement

1. Remove the splash shield.
2. Drain the engine coolant (see page 10-6).
3. Disconnect the ECT sensor 2 connector (A), then remove ECT sensor 2 (B).

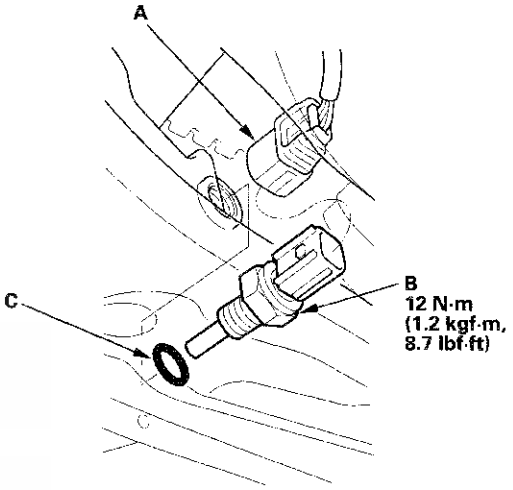

4. Install ECT sensor 2 with a new O-ring (C).
5. Install the splash shield.
6. Refill the radiator with engine coolant (see page 10-6).

Output Shaft (Countershaft) Speed Sensor Replacement

NOTE: For A/T models (see page 14-226).

M/T

1. Disconnect the output shaft (countershaft) speed sensor 3P connector (A).

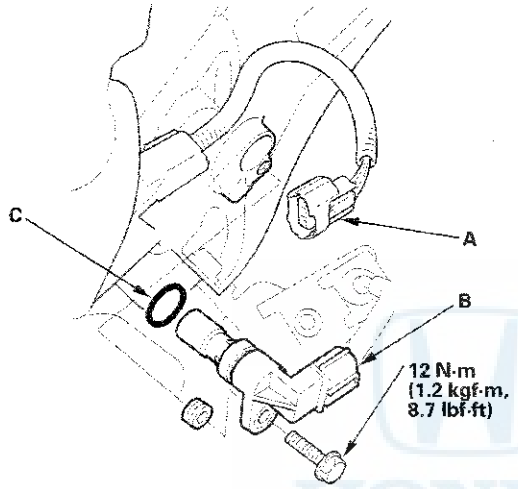

2. Remove the output shaft (countershaft) speed sensor (B).

3. Install the parts in the reverse order of removal with a new O-ring (C).

Knock Sensor Replacement

1. Remove the intake manifold (see page 9-3).

2. Disconnect the knock sensor connector (A).

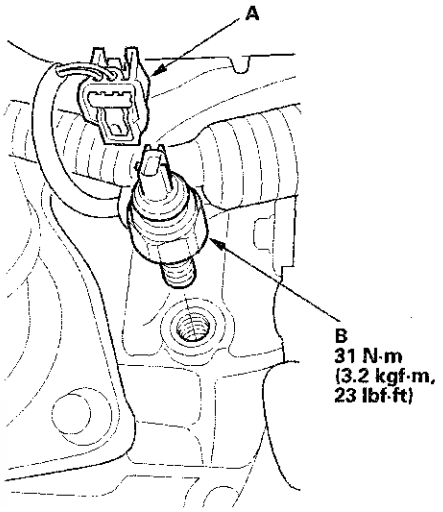

3. Remove the knock sensor (B).

4. Install the parts in the reverse order of removal.

ELD Replacement

1. Do the battery terminal disconnection procedure (see page 22-89).

2. Remove the upper cover (A), then remove the two positive (+) terminals (B).

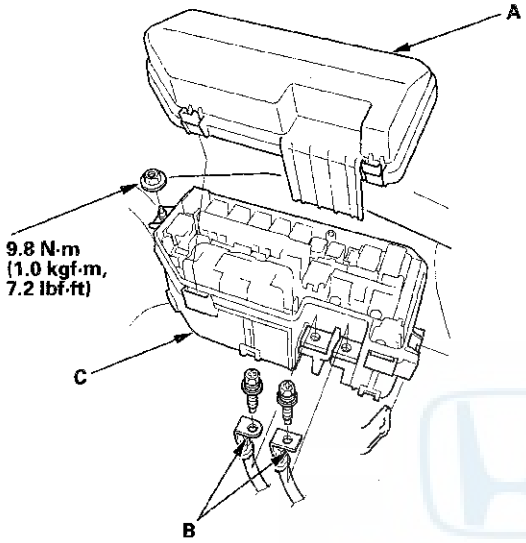

3. Remove the under-hood fuse/relay box (C) from the bracket.

4. Remove the lower cover (A).

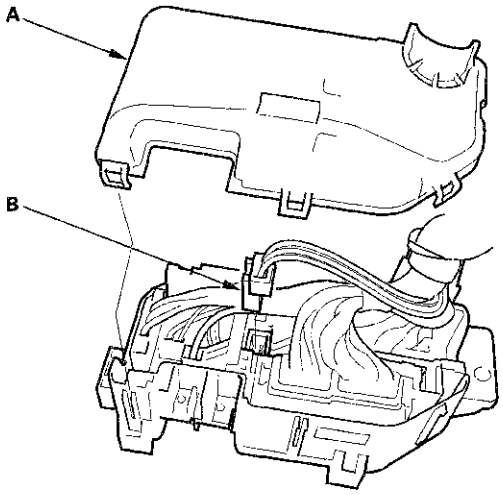

5. Disconnect the ELD 3P connector (B).

6. Remove the fuses (A) and (B).

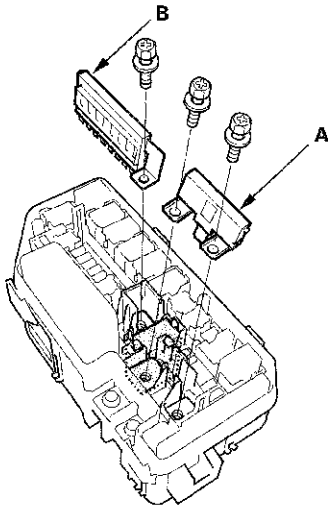

7. Release the three lock tabs (A), then remove the ELD (B).

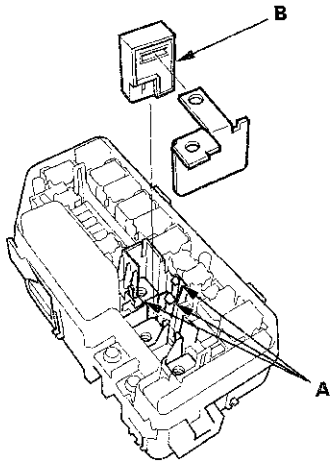

8. Install the parts in the reverse order of removal.

9. Do the battery terminal reconnection procedure (see page 22-89).

ECM/PCM Update

Special Tools Required
- Honda diagnostic system (HDS) tablet tester
- Honda interface module (HIM) and an iN workstation with HDS and CM update software
- HDS pocket tester
- GNA600 and an iN workstation with HDS and CM update software

Use any one of these update tools.

NOTE:
- Use this procedure when you need to update the ECM/PCM at any time.
- Make sure the HDS/HIM has the latest software version.
- Before you update the ECM/PCM, make sure the battery in the vehicle is fully charged, and connect a jumper battery (not a battery charger) to maintain system voltage.
- Never turn the ignition switch to LOCK (0) or ACC (I) during the update. If there is a problem with the update, leave the ignition switch ON (II).
- To prevent ECM/PCM damage, do not operate anything electrical (headlights, audio system, brakes, A/C, power windows, moonroof (if equipped), door locks, etc.) during the update.
- To ensure the latest program is installed, do an ECM/PCM update whenever the ECM/PCM is substituted or replaced.
- You cannot update an ECM/PCM with a program it already has. It will only accept a new program.
- High temperature in the engine compartment might cause the ECM/PCM to become too hot to run the update. If the engine has been running before this procedure, open the hood and cool the engine compartment.
- If you need to diagnose the Honda interface module (HIM) because the HIM's red (#3) light came on or was flashing during the update, leave the ignition switch in ON (II) when you disconnect the HIM from the data link connector (DLC). This will prevent ECM/PCM damage.

1. Turn the ignition switch to ON (II), but do not start the engine.

2. Connect the HDS to the data link connector (DLC) (A) located under the driver's side of the dashboard.

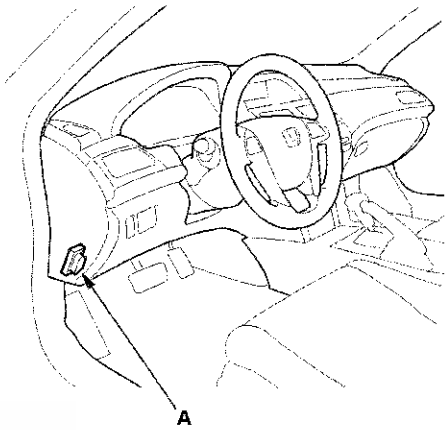

3. Make sure the HDS communicates with the ECM/PCM and other vehicle systems. If it doesn't, go to the DLC circuit troubleshooting (see page 11-192). If you are returning from the DLC circuit troubleshooting, skip steps 4 and 5, and clean the throttle body after updating the ECM/PCM (see page 11-359).

4. Select the INSPECTION MENU with the HDS.

5. Select the ETCS TEST, then select the TP POSITION CHECK, and follow the HDS screen prompts.

   NOTE: If the TP POSITION CHECK indicates FAILED, continue this procedure.

6. Exit the HDS diagnostic system, then select the update mode, and follow the screen prompts to update the ECM/PCM.

(cont'd)

ECM/PCM Update (cont'd)

7. If the software in the ECM/PCM is the latest, disconnect the HDS/HIM from the DLC, and go back to the procedure that you were doing. If the software in the ECM/PCM is not the latest, follow the instructions on the screen. If prompted to choose the PGM-FI system or the A/T system, make sure you update both.

   NOTE: If the ECM/PCM update system requires you to cool the ECM/PCM, follow the instructions on screen. If you run into a problem during the update procedure (programming takes over 15 minutes, status bar goes over 100 %, D or immobilizer light flashes, HDS tablet freezes, etc.), follow these steps to minimize the chance of damaging the ECM/PCM:
   - Leave the ignition switch in the ON (II) position.
   - Connect a jumper battery (do not connect a battery charger).
   - Shut down the HDS.
   - Disconnect the HDS from the DLC.
   - Reboot the HDS.
   - Reconnect the HDS to the DLC, and try the update procedure again.

8. If the TP POSITION CHECK failed in step 5, clean the throttle body (see page 11-359).

9. Do the ECM/PCM idle learn procedure (see page 11-317).

10. Do the CKP pattern learn procedure.

ECM/PCM Replacement

Special Tools Required
- Honda diagnostic system (HDS) tablet tester
- Honda interface module (HIM) and an iN workstation with HDS and CM update software
- HDS pocket tester
- GNA600 and an iN workstation with HDS and CM update software

Use any one of these update tools.

1. Connect the HDS to the data link connector (DLC) (A) located under the driver's side of the dashboard.

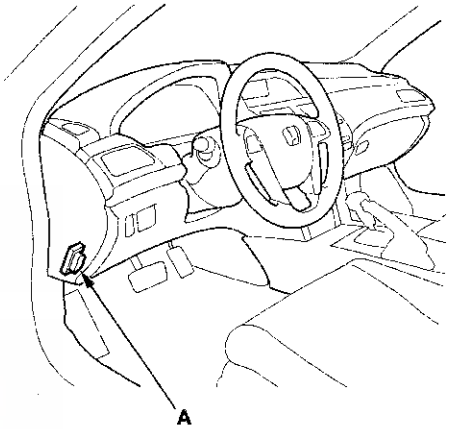

2. Turn the ignition switch to ON (II).

3. Make sure the HDS communicates with the ECM/PCM and other vehicle systems. If it doesn't, go to the DLC circuit troubleshooting (see page 11-192). If you are returning from the DLC circuit troubleshooting, skip steps 4 through 9, 20 through 25, and 28 through 30, and do this after replacing the ECM/PCM:

   - Replace the engine oil (see page 8-9) and the engine oil filter (see page 8-10).
   - Replace the ATF (A/T model) (see page 14-231).
   - Clean the throttle body (see page 11-359).

4. Select the PGM-FI system with the HDS.

5. Select the INSPECTION MENU with the HDS.

6. Select the ETCS TEST, then select the TP POSITION CHECK, and follow the screen prompts.

   NOTE: If the TP POSITION CHECK indicates FAILED, continue with this procedure.

7. Select the REPLACE ECM/PCM MENU, then READ DATA, and follow the screen prompts.

   NOTE:
   - Doing this step copies (READS) the engine oil life data from the original ECM/PCM so you can later download (WRITES) it into the new ECM/PCM.
   - If READ DATA indicates FAILED, continue with this procedure.

8. A/T models: Select the A/T system with the HDS.

9. A/T models: Select the REPLACE TCM/PCM MENU, then select READ DATA, and follow the screen prompts.

   NOTE:
   - Doing this step copies (READS) the ATF life data from the original PCM so you can later download (WRITES) it into the new PCM.
   - If READ DATA indicates FAILED, continue with this procedure.

10. Turn the ignition switch to LOCK (0).

11. Jump the SCS line with the HDS.

12. Do the battery removal procedure (see page 22-90).

13. Remove the bolts (D).

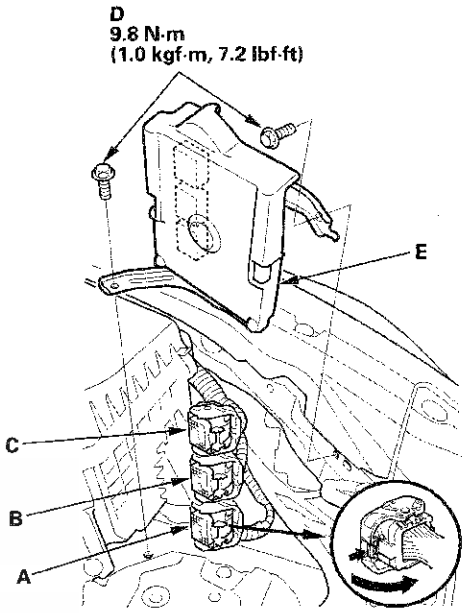

14. Disconnect ECM/PCM connectors A, B, and C, then remove the ECM/PCM assembly (E).

    NOTE: ECM/PCM connectors A, B, and C have symbols (A=□, B=△, C=○) embossed on them for identification.

(cont'd)

ECM/PCM Replacement (cont'd)

15. Remove the cover (A) and the bracket (B) from the ECM/PCM (C).

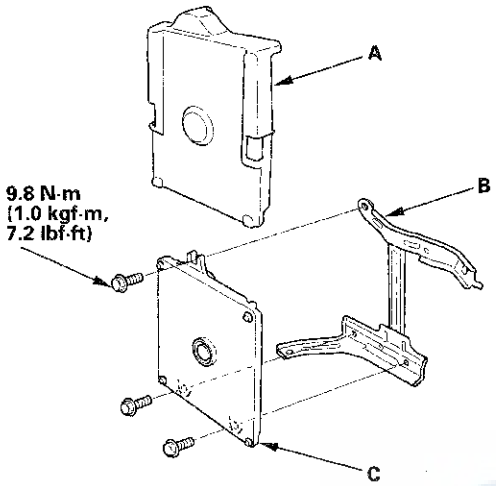

16. Install the ECM/PCM in the reverse order of removal.

17. Do the battery installation procedure (see page 22-90).

    NOTE: While doing the battery installation procedure, do not start the engine.

18. Turn the ignition switch to ON (II).

19. Manually input the VIN to the ECM/PCM with the HDS.

    NOTE: DTC P0630 "VIN Not Programmed or Mismatch" may be stored because the VIN has not been programmed into the ECM/PCM; ignore it, and continue this procedure.

20. If the READ DATA (engine oil life) failed in step 7, go to step 23 (A/T model) or step 26 (M/T model). Otherwise, go to step 21.

21. Select the PGM-FI system with the HDS.

22. Select the REPLACE ECM/PCM MENU, then select WRITE DATA, and follow the screen prompts.

    NOTE: If the WRITE DATA indicates FAILED, continue with this procedure.

23. A/T models: If the READ DATA (ATF life) failed in step 9, go to step 26. Otherwise go to step 24.

24. A/T models: Select the A/T SYSTEM with the HDS.

25. A/T models: Select the REPLACE TCM/PCM MENU, then select WRITE DATA, and follow the screen prompts.

    NOTE: If the WRITE DATA indicates FAILED, continue with this procedure.

26. Select IMMOBI system with the HDS.

27. Enter the immobilizer code that you obtained from iN or ISIS with the ECM/PCM replacement procedure in the HDS; it allows you to start the engine.

28. If the TP POSITION CHECK failed in step 6 clean the throttle body (see page 11-359), then go to step 29.

29. If the READ DATA failed in step 7 or the WRITE DATA failed in step 22, replace the engine oil (see page 8-9) and engine oil filter (see page 8-10), then go to step 30 (A/T model) or step 31 (M/T model).

30. If the READ DATA failed in step 9 or the WRITE DATA failed in step 25, replace the ATF (see page 14-231), then go to step 31.

31. Select PGM-FI system, and reset the ECM/PCM with the HDS.

32. Update the ECM/PCM if it does not have the latest software (see page 11-215).

33. Do the ECM/PCM idle learn procedure (see page 11-317).

34. Do the CKP pattern learn procedure (see page 11-5).

Component Location Index

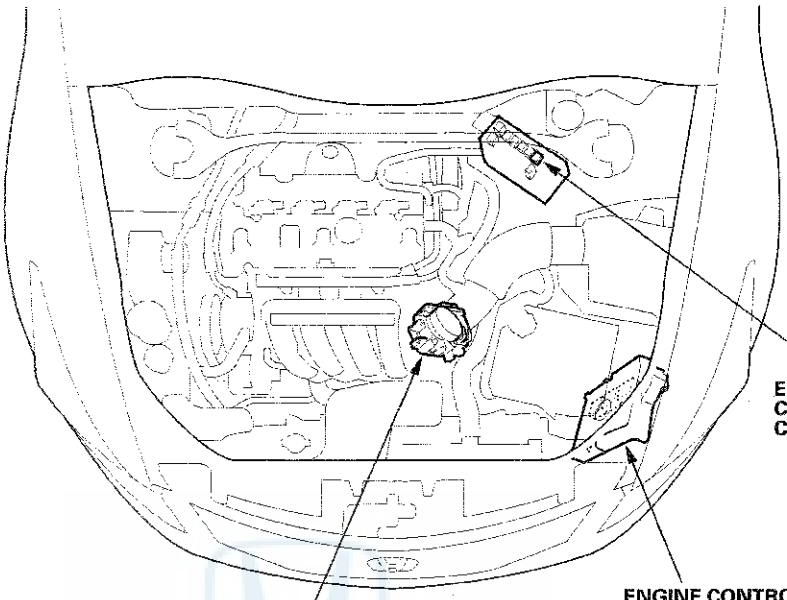

ELECTRONIC THROTTLE CONTROL SYSTEM (ETCS) CONTROL RELAY

ENGINE CONTROL MODULE (ECM)/ POWERTRAIN CONTROL MODULE (PCM)
Update, page 11-215
Substitution, page 11-7
Replacement, page 11-216

THROTTLE ACTUATOR and THROTTLE POSITION (TP) SENSOR

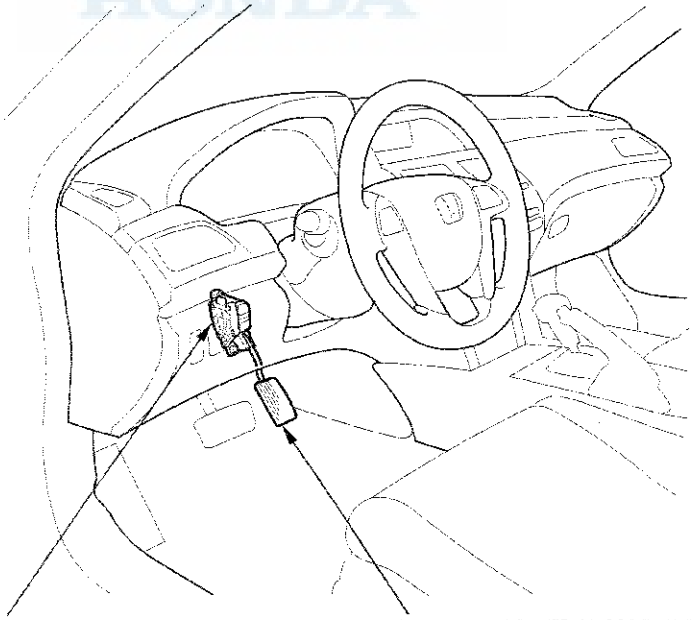

ACCELERATOR PEDAL POSITION (APP) SENSOR
Signal Inspection, page 11-258

ACCELERATOR PEDAL MODULE
Removal/Installation, page 11-259

DTC Troubleshooting

DTC P0122: TP Sensor A Circuit Low Voltage

NOTE: Before you troubleshoot, record all freeze data and any on-board snapshot, and review the general troubleshooting information (see page 11-3).

1. Turn the ignition switch to ON (II).
2. Clear the DTC with the HDS.
3. Check TP SENSOR A in the DATA LIST with the HDS.

   Is there about 0.3 V or less?

   YES—Go to step 4.

   NO—Intermittent failure, the system is OK at this time. Check for poor connections or loose terminals at the throttle body and the ECM/PCM.■

4. Check for Temporary DTCs or DTCs with the HDS.

   Are DTC P0122 and P0222 indicated at the same time?

   YES—Go to step 10.

   NO—Go to step 5.

5. Turn the ignition switch to LOCK (0).
6. Disconnect the throttle body 6P connector.
7. Jump the SCS line with the HDS.
8. Disconnect ECM/PCM connector C (49P).
9. Check for continuity between throttle body 6P connector terminal No. 1 and body ground.

THROTTLE BODY 6P CONNECTOR

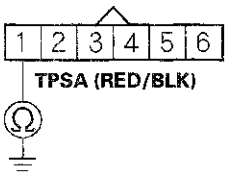

Wire side of female terminals

Is there continuity?

YES—Repair short in the wire between the throttle body and the ECM/PCM (C20), then go to step 18.

NO—Go to step 23.

10. Measure the voltage between throttle body 6P connector terminal No. 2 and body ground.

THROTTLE BODY 6P CONNECTOR

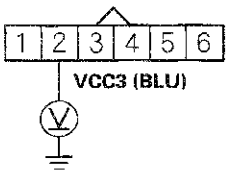

Wire side of female terminals

Is there about 5 V?

YES—Go to step 16.

NO—Go to step 11.

11. Turn the ignition switch to LOCK (0).

12. Jump the SCS line with the HDS.

13. Disconnect ECM/PCM connector C (49P).

14. Disconnect the throttle body 6P connector.

15. Check for continuity between ECM/PCM connector terminal C12 and throttle body 6P connector terminal No. 2.

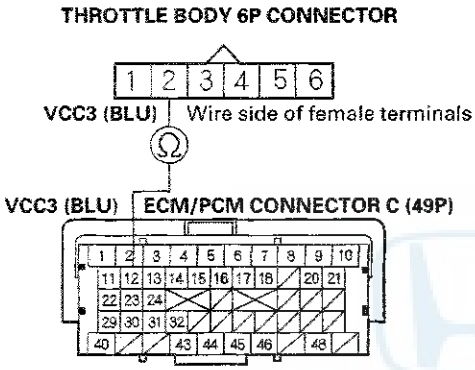

Is there continuity?

YES—Go to step 23.

NO—Repair open in the wire between the throttle body and the ECM/PCM (C12), then go to step 18.

16. Turn the ignition switch to LOCK (0).

17. Replace the throttle body (see page 11-362).

18. Reconnect all connectors.

19. Turn the ignition switch to ON (II).

20. Reset the ECM/PCM with the HDS.

21. Do the ECM/PCM idle learn procedure (see page 11-317).

22. Check for Temporary DTCs or DTCs with the HDS.

Is DTC P0122 indicated?

YES—Check for poor connections or loose terminals at the throttle body and the ECM/PCM, then go to step 1.

NO—Troubleshooting is complete. If any other Temporary DTCs or DTCs are indicated, go to the indicated DTC's troubleshooting.■

23. Reconnect all connectors.

24. Update the ECM/PCM if it does not have the latest software (see page 11-215), or substitute a known-good ECM/PCM (see page 11-7).

25. Check for Temporary DTCs or DTCs with the HDS.

Is DTC P0122 indicated?

YES—Check for poor connections or loose terminals at the throttle body and the ECM/PCM. If the ECM/PCM was updated, substitute a known-good ECM/PCM (see page 11-7), then recheck. If the ECM/PCM was substituted, go to step 1.

NO—If the ECM/PCM was updated, troubleshooting is complete. If the ECM/PCM was substituted, replace the original ECM/PCM (see page 11-216). If any other Temporary DTCs or DTCs are indicated, go to the indicated DTC's troubleshooting.■

DTC Troubleshooting (cont'd)

DTC P0123: TP Sensor A Circuit High Voltage

NOTE: Before you troubleshoot, record all freeze data and any on-board snapshot, and review the general troubleshooting information (see page 11-3).

1. Turn the ignition switch to ON (II).
2. Clear the DTC with the HDS.
3. Check TP SENSOR A in the DATA LIST with the HDS.

   Is there about 4.8 V or more?

   YES—Go to step 4.

   NO—Intermittent failure, the system is OK at this time. Check for poor connections or loose terminals at the throttle body and the ECM/PCM. ■

4. Check for Temporary DTCs or DTCs with the HDS.

   Are DTC P0123 and P0223 indicated at the same time?

   YES—Go to step 13.

   NO—Go to step 5.

5. Turn the ignition switch to LOCK (0).
6. Disconnect the throttle body 6P connector.
7. Turn the ignition switch to ON (II).
8. Measure the voltage between throttle body 6P connector terminal No. 1 and body ground.

THROTTLE BODY 6P CONNECTOR

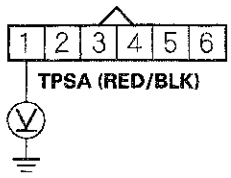

Wire side of female terminals

   Is there about 5 V?

   YES—Go to step 18.

   NO—Go to step 9.

9. Turn the ignition switch to LOCK (0).
10. Jump the SCS line with the HDS.
11. Disconnect ECM/PCM connector C (49P).

12. Check for continuity between ECM/PCM connector terminal C20 and throttle body 6P connector terminal No. 1.

THROTTLE BODY 6P CONNECTOR

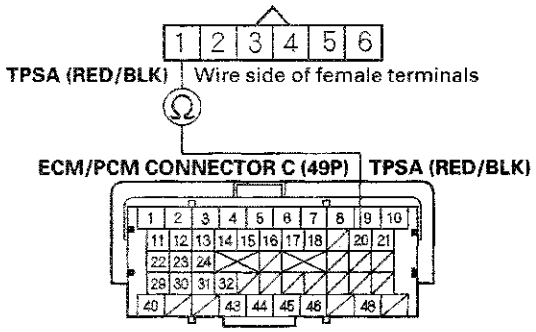

Is there continuity?

YES—Go to step 25.

NO—Repair open in the wire between the throttle body and the ECM/PCM (C20), then go to step 20.

13. Turn the ignition switch to LOCK (0).

14. Disconnect the throttle body 6P connector.

15. Jump the SCS line with the HDS.

16. Disconnect ECM/PCM connector C (49P).

17. Check for continuity between ECM/PCM connector terminal C43 and throttle body 6P connector terminal No. 4.

THROTTLE BODY 6P CONNECTOR

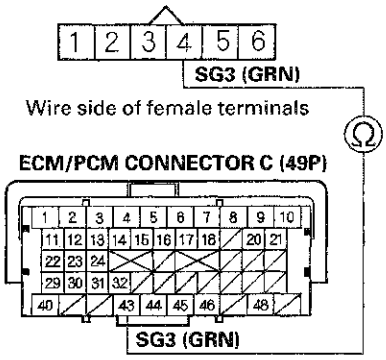

Is there continuity?

YES—Go to step 25.

NO—Repair open in the wire between the throttle body and the ECM/PCM (C43), then go to step 20.

18. Turn the ignition switch to LOCK (0).

19. Replace the throttle body (see page 11-362).

20. Reconnect all connectors.

21. Turn the ignition switch to ON (II).

22. Reset the ECM/PCM with the HDS.

(cont'd)

DTC Troubleshooting (cont'd)

23. Do the ECM/PCM idle learn procedure (see page 11-317).

24. Check for Temporary DTCs or DTCs with the HDS.

    Is DTC P0123 indicated?

    YES—Check for poor connections or loose terminals at the throttle body and the ECM/PCM, then go to step 1.

    NO—Troubleshooting is complete. If any other Temporary DTCs or DTCs are indicated, go to the indicated DTC's troubleshooting.■

25. Reconnect all connectors.

26. Update the ECM/PCM if it does not have the latest software (see page 11-215), or substitute a known-good ECM/PCM (see page 11-7).

27. Check for Temporary DTCs or DTCs with the HDS.

    Is DTC P0123 indicated?

    YES—Check for poor connections or loose terminals at the throttle body and the ECM/PCM. If the ECM/PCM was updated, substitute a known-good ECM/PCM (see page 11-7), then recheck. If the ECM/PCM was substituted, go to step 1.

    NO—If the ECM/PCM was updated, troubleshooting is complete. If the ECM/PCM was substituted, replace the original ECM/PCM (see page 11-216). If any other Temporary DTCs or DTCs are indicated, go to the indicated DTC's troubleshooting.■

DTC P0222: TP Sensor B Circuit Low Voltage

NOTE: Before you troubleshoot, record all freeze data and any on-board snapshot, and review the general troubleshooting information (see page 11-3).

1. Turn the ignition switch to ON (II).

2. Clear the DTC with the HDS.

3. Check TP SENSOR B in the DATA LIST with the HDS.

   Is there about 0.3 V or less?

   YES—Go to step 4.

   NO—Intermittent failure, the system is OK at this time. Check for poor connections or loose terminals at the throttle body and the ECM/PCM.■

4. Check for Temporary DTCs or DTCs with the HDS.

   Are DTC P0122 and P0222 indicated at the same time?

   YES—Go to step 10.

   NO—Go to step 5.

5. Turn the ignition switch to LOCK (0).

6. Disconnect the throttle body 6P connector.

7. Jump the SCS line with the HDS.

8. Disconnect ECM/PCM connector C (49P).

9. Check for continuity between throttle body 6P connector terminal No. 3 and body ground.

THROTTLE BODY 6P CONNECTOR

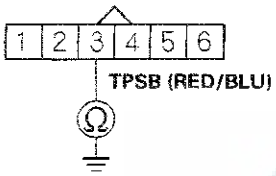

Wire side of female terminals

Is there continuity?

YES—Repair short in the wire between the throttle body and the ECM/PCM (C21), then go to step 18.

NO—Go to step 23.

10. Measure the voltage between throttle body 6P connector terminal No. 2 and body ground.

THROTTLE BODY 6P CONNECTOR

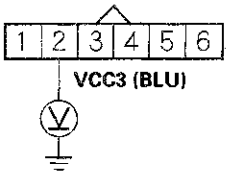

Wire side of female terminals

Is there about 5 V?

YES—Go to step 16.

NO—Go to step 11.

11. Turn the ignition switch to LOCK (0).

12. Jump the SCS line with the HDS.

13. Disconnect ECM/PCM connector C (49P).

14. Disconnect the throttle body 6P connector.

(cont'd)

DTC Troubleshooting (cont'd)

15. Check for continuity between ECM/PCM connector terminal C12 and throttle body 6P connector terminal No. 2.

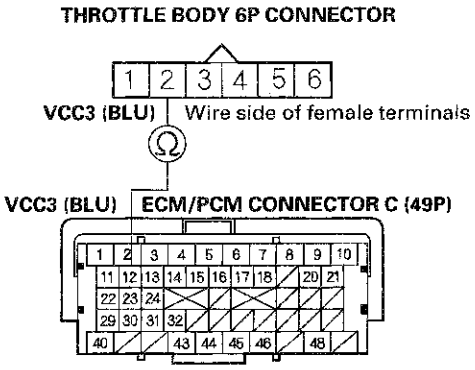

Is there continuity?

YES—Go to step 23.

NO—Repair open in the wire between the throttle body and the ECM/PCM (C12), then go to step 18.

16. Turn the ignition switch to LOCK (0).

17. Replace the throttle body (see page 11-362).

18. Reconnect all connectors.

19. Turn the ignition switch to ON (II).

20. Reset the ECM/PCM with the HDS.

21. Do the ECM/PCM idle learn procedure (see page 11-317).

22. Check for Temporary DTCs or DTCs with the HDS.

Is DTC P0222 indicated?

YES—Check for poor connections or loose terminals at the throttle body and the ECM/PCM, then go to step 1.

NO—Troubleshooting is complete. If any other Temporary DTCs or DTCs are indicated, go to the indicated DTC's troubleshooting. ■

23. Reconnect all connectors.

24. Update the ECM/PCM if it does not have the latest software (see page 11-215), or substitute a known-good ECM/PCM (see page 11-7).

25. Check for Temporary DTCs or DTCs with the HDS.

Is DTC P0222 indicated?

YES—Check for poor connections or loose terminals at the throttle body and the ECM/PCM. If the ECM/PCM was updated, substitute a known-good ECM/PCM (see page 11-7), then recheck. If the ECM/PCM was substituted, go to step 1.

NO—If the ECM/PCM was updated, troubleshooting is complete. If the ECM/PCM was substituted, replace the original ECM/PCM (see page 11-216). If any other Temporary DTCs or DTCs are indicated, go to the indicated DTC's troubleshooting. ■

DTC P0223: TP Sensor B Circuit High Voltage

NOTE: Before you troubleshoot, record all freeze data and any on-board snapshot, and review the general troubleshooting information (see page 11-3).

1. Turn the ignition switch to ON (II).
2. Clear the DTC with the HDS.
3. Check TP SENSOR B in the DATA LIST with the HDS.

   Is there about 4.8 V or more?

   YES—Go to step 4.

   NO—Intermittent failure, the system is OK at this time. Check for poor connections or loose terminals at the throttle body and the ECM/PCM. ■

4. Check for Temporary DTCs or DTCs with the HDS.

   Are DTC P0123 and P0223 indicated at the same time?

   YES—Go to step 13.

   NO—Go to step 5.

5. Turn the ignition switch to LOCK (0).
6. Disconnect the throttle body 6P connector.
7. Turn the ignition switch to ON (II).
8. Measure the voltage between throttle body 6P connector terminal No. 3 and body ground.

THROTTLE BODY 6P CONNECTOR

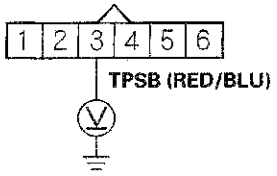

Wire side of female terminals

   Is there about 5 V?

   YES—Go to step 18.

   NO—Go to step 9.

9. Turn the ignition switch to LOCK (0).
10. Jump the SCS line with the HDS.
11. Disconnect ECM/PCM connector C (49P).

(cont'd)

DTC Troubleshooting (cont'd)

12. Check for continuity between ECM/PCM connector terminal C21 and throttle body 6P connector terminal No. 3.

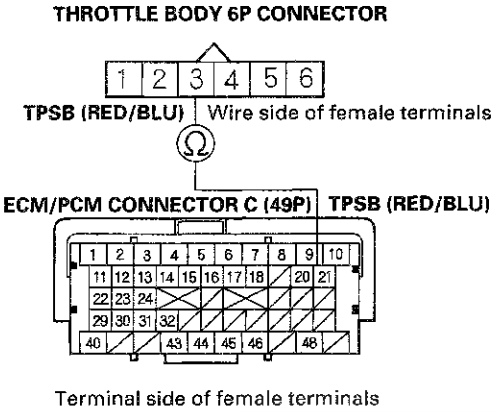

Is there continuity?

YES—Go to step 25.

NO—Repair open in the wire between the throttle body and the ECM/PCM (C21), then go to step 20.

13. Turn the ignition switch to LOCK (0).

14. Disconnect the throttle body 6P connector.

15. Jump the SCS line with the HDS.

16. Disconnect ECM/PCM connector C (49P).

17. Check for continuity between ECM/PCM connector terminal C43 and throttle body 6P connector terminal No. 4.

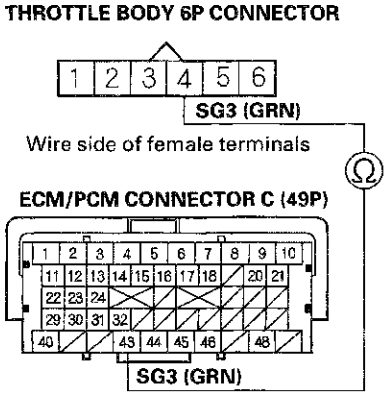

Is there continuity?

YES—Go to step 25.

NO—Repair open in the wire between the throttle body and the ECM/PCM (C43), then go to step 20.

18. Turn the ignition switch to LOCK (0).

19. Replace the throttle body (see page 11-362).

20. Reconnect all connectors.

21. Turn the ignition switch to ON (II).

22. Reset the ECM/PCM with the HDS.

23. Do the ECM/PCM idle learn procedure (see page 11-317).

24. Check for Temporary DTCs or DTCs with the HDS.

    Is DTC P0223 indicated?

    YES—Check for poor connections or loose terminals at the throttle body and the ECM/PCM, then go to step 1.

    NO—Troubleshooting is complete. If any other Temporary DTCs or DTCs are indicated, go to the indicated DTC's troubleshooting. ■

25. Reconnect all connectors.

26. Update the ECM/PCM if it does not have the latest software (see page 11-215), or substitute a known-good ECM/PCM (see page 11-7).

27. Check for Temporary DTCs or DTCs with the HDS.

    Is DTC P0223 indicated?

    YES—Check for poor connections or loose terminals at the throttle body and the ECM/PCM. If the ECM/PCM was updated, substitute a known-good ECM/PCM (see page 11-7), then recheck. If the ECM/PCM was substituted, go to step 1.

    NO—If the ECM/PCM was updated, troubleshooting is complete. If the ECM/PCM was substituted, replace the original ECM/PCM (see page 11-216). If any other Temporary DTCs or DTCs are indicated, go to the indicated DTC's troubleshooting. ■

DTC P1658: ETCS Control Relay ON Malfunction

NOTE: Before you troubleshoot, record all freeze data and any on-board snapshot, and review the general troubleshooting information (see page 11-3).

1. Turn the ignition switch to ON (II).

2. Do the ETCS TEST in the INSPECTION MENU with the HDS.

   Is the RELAY circuit OK?

   YES—Intermittent failure, the system is OK at this time. Check for poor connections or loose terminals at the ETCS control relay and the ECM/PCM. ■

   NO—Go to step 3.

3. Turn the ignition switch to LOCK (0).

4. Remove the ETCS control relay (A) from the under-hood fuse/relay box.

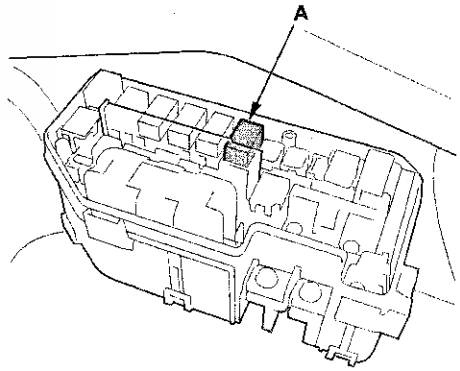

5. Test the ETCS control relay (see page 22-91).

   Is the ETCS control relay OK?

   YES—Go to step 6.

   NO—Replace the ETCS control relay, then go to step 13.

(cont'd)

DTC Troubleshooting (cont'd)

6. Jump the SCS line with the HDS.
7. Disconnect ECM/PCM connector A (49P).
8. Check for continuity between ECM/PCM connector terminal A21 and body ground.

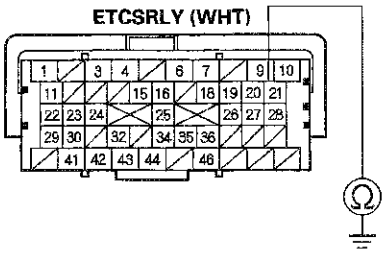

Terminal side of female terminals

Is there continuity?

YES—Repair short in the wire between the ECM/PCM (A21) and the ETCS control relay, then go to step 13.

NO—Go to step 9.

9. Disconnect ECM/PCM connector C (49P).
10. Turn the ignition switch to ON (II).
11. Measure the voltage between ECM/PCM connector terminal C1 and body ground.

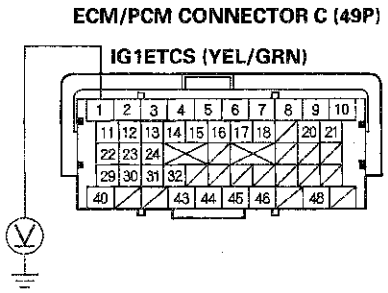

Terminal side of female terminals

Is there battery voltage?

YES—Repair short to power in the wire between the ECM/PCM (C1) and the ETCS control relay, then go to step 12.

NO—Go to step 18.

12. Turn the ignition switch to LOCK (0).
13. Reconnect all connectors.
14. Turn the ignition switch to ON (II).
15. Reset the ECM/PCM with the HDS.
16. Do the ECM/PCM idle learn procedure (see page 11-317).
17. Check for Temporary DTCs or DTCs with the HDS.

Is DTC P1658 indicated?

YES—Check for poor connections or loose terminals at the ETCS control relay and the ECM/PCM, then go to step 1.

NO—Troubleshooting is complete. If any other Temporary DTCs or DTCs are indicated, go to the indicated DTC's troubleshooting. ■

18. Turn the ignition switch to LOCK (0).

19. Reconnect all connectors.

20. Update the ECM/PCM if it does not have the latest software (see page 11-215), or substitute a known-good ECM/PCM (see page 11-7).

21. Check for Temporary DTCs or DTCs with the HDS.

    Is DTC P1658 indicated?

    YES—Check for poor connections or loose terminals at the ETCS control relay and the ECM/PCM. If the ECM/PCM was updated, substitute a known-good ECM/PCM (see page 11-7), then recheck. If the ECM/PCM was substituted, go to step 1.

    NO—If the ECM/PCM was updated, troubleshooting is complete. If the ECM/PCM was substituted, replace the original ECM/PCM (see page 11-216). If any other Temporary DTCs or DTCs are indicated, go to the indicated DTC's troubleshooting. ■

DTC P1659: ETCS Control Relay OFF Malfunction

NOTE: Before you troubleshoot, record all freeze data and any on-board snapshot, and review the general troubleshooting information (see page 11-3).

1. Turn the ignition switch to ON (II).

2. Clear the DTC with the HDS.

3. Check for Temporary DTCs or DTCs with the HDS.

   Is DTC P1659 indicated?

   YES—Go to step 4.

   NO—Intermittent failure, the system is OK at this time. Check for poor connections or loose terminals at the ETCS control relay and the ECM/PCM. ■

4. Turn the ignition switch to LOCK (0).

5. Check the No. 18 DBW (THROTTLE ACTUATOR CONTROL) (15 A) fuse in the under-hood fuse/relay box.

   Is the fuse OK?

   YES—Go to step 6.

   NO—Go to step 17.

6. Remove the ETCS control relay (A) from the under-hood fuse/relay box.

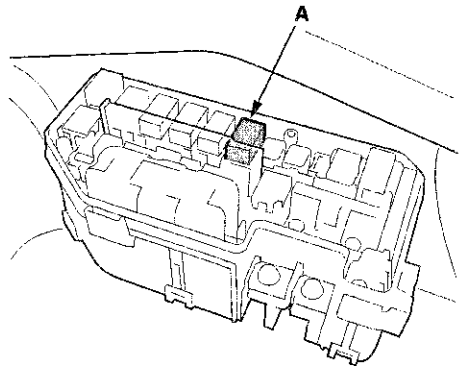

(cont'd)

DTC Troubleshooting (cont'd)

7. Test the ETCS control relay (see page 22-91).

   Is the ETCS control relay OK?

   YES—Go to step 8.

   NO—Replace the ETCS control relay, then go to step 23.

8. Turn the ignition switch to ON (II).

9. Measure the voltage between ETCS control relay 4P connector terminal No. 4 and body ground.

ETCS CONTROL RELAY 4P CONNECTOR

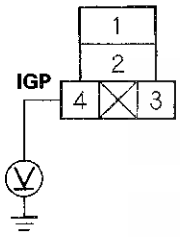

Terminal side of female terminals

Is there battery voltage?

YES—Go to step 10.

NO—Replace the under-hood fuse/relay box (see page 22-83), then go to step 22.

10. Measure the voltage between ETCS control relay 4P connector terminal No. 1 and body ground.

ETCS CONTROL RELAY 4P CONNECTOR

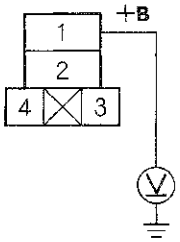

Terminal side of female terminals

Is there battery voltage?

YES—Go to step 11.

NO—Replace the under-hood fuse/relay box (see page 22-83), then go to step 22.

11. Turn the ignition switch to LOCK (0).

12. Jump the SCS line with the HDS.

13. Disconnect ECM/PCM connector C (49P).

14. Check for continuity between ETCS control relay 4P connector terminal No. 2 and ECM/PCM connector terminal C1.

ETCS CONTROL RELAY 4P CONNECTOR

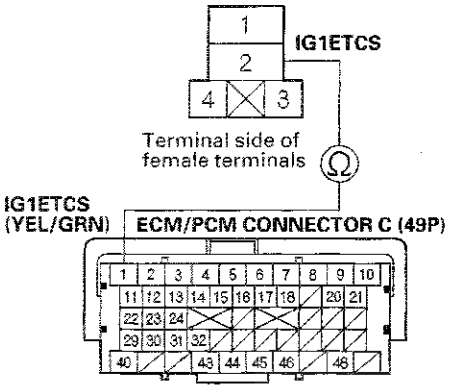

Terminal side of female terminals

Is there continuity?

YES—Go to step 15.

NO—Repair open in the wire between the ECM/PCM (C1) and the ETCS control relay, then go to step 23.

15. Disconnect ECM/PCM connector A (49P).

16. Check for continuity between ETCS control relay 4P connector terminal No. 3 and ECM/PCM connector terminal A21.

ETCS CONTROL RELAY 4P CONNECTOR

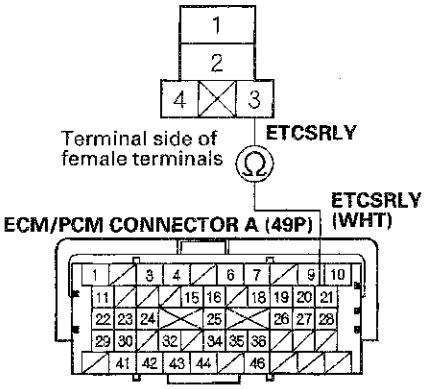

Terminal side of female terminals

Is there continuity?

YES—Go to step 28.

NO—Repair open in the wire between the ECM/PCM (A21) and the ETCS control relay, then go to step 23.

17. Remove the ETCS control relay (A) from the under-hood fuse/relay box.

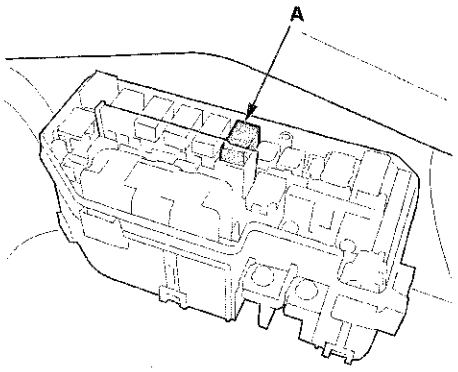

(cont'd)

DTC Troubleshooting (cont'd)

18. Jump the SCS line with the HDS.

19. Disconnect ECM/PCM connector C (49P).

20. Check for continuity between ECM/PCM connector terminal C1 and body ground.

ECM/PCM CONNECTOR C (49P)

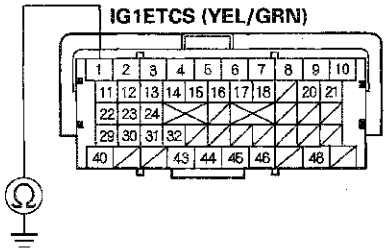

Terminal side of female terminals

Is there continuity?

YES—Repair short in the wire between the ECM/PCM (C1) and the ETCS control relay, then go to step 23.

NO—Go to step 21.

21. Check for continuity between ETCS control relay 4P connector terminal No. 1 and body ground.

ETCS CONTROL RELAY 4P CONNECTOR

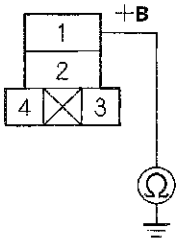

Terminal side of female terminals

Is there continuity?

YES—Replace the under-hood fuse/relay box (see page 22-83), then go to step 23.

NO—Go to step 28.

22. Turn the ignition switch to LOCK (0).

23. Reconnect all connectors.

24. Turn the ignition switch to ON (II).

25. Reset the ECM/PCM with the HDS.

26. Do the ECM/PCM idle learn procedure (see page 11-317).

27. Check for Temporary DTCs or DTCs with the HDS.

Is DTC P1659 indicated?

YES—Check for poor connections or loose terminals at the ETCS control relay and the ECM/PCM, then go to step 1.

NO—Troubleshooting is complete. If any other Temporary DTCs or DTCs are indicated, go to the indicated DTC's troubleshooting. ■

28. Reconnect all connectors.

29. Update the ECM/PCM if it does not have the latest software (see page 11-215), or substitute a known-good ECM/PCM (see page 11-7).

30. Check for Temporary DTCs or DTCs with the HDS.

    Is DTC P1659 indicated?

    YES—Check for poor connections or loose terminals at the ETCS control relay and the ECM/PCM. If the ECM/PCM was updated, substitute a known-good ECM/PCM (see page 11-7), then recheck. If the ECM/PCM was substituted, go to step 1.

    NO—If the ECM/PCM was updated, troubleshooting is complete. If the ECM/PCM was substituted, replace the original ECM/PCM (see page 11-216). If any other Temporary DTCs or DTCs are indicated, go to the indicated DTC's troubleshooting. ■

DTC P1683: Throttle Valve Default Position Spring Performance Problem

⚠CAUTION

Do not insert your fingers into the installed throttle body when you turn the ignition switch to ON (II) or while the ignition switch is ON (II). If you do, you will seriously injure your fingers if the throttle valve is activated.

NOTE: Before you troubleshoot, record all freeze data and any on-board snapshot, and review the general troubleshooting information (see page 11-3).

1. Turn the ignition switch to ON (II).

2. Clear the DTC with the HDS.

3. Start the engine. Hold the engine speed at 3,000 rpm without load (A/T in P or N, M/T in neutral) until the radiator fan comes on, then let it idle.

4. Turn the ignition switch to LOCK (0), and wait 10 seconds.

5. Turn the ignition switch to ON (II).

6. Check for Temporary DTCs or DTCs with the HDS.

   Is DTC P1683 indicated?

   YES—Go to step 7.

   NO—Intermittent failure, the system is OK at this time. Check for poor connections or loose terminals at the throttle body and the ECM/PCM. ■

7. Turn the ignition switch to LOCK (0).

8. Disconnect the intake air duct from the throttle body (see page 11-362).

(cont'd)

DTC Troubleshooting (cont'd)

9. Push the throttle valve closed as shown.

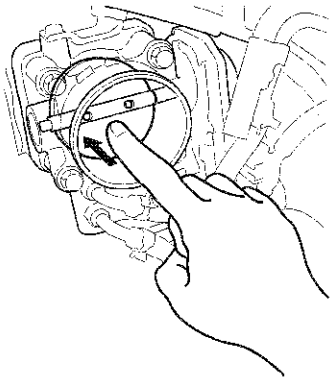

10. Release the throttle valve.

    Does the throttle valve return?

    YES—Clean the throttle body (see page 11-359), then go to step 12 and recheck. If DTC P1683 is indicated, go to step 11.

    NO—Go to step 11.

11. Replace the throttle body (see page 11-362).

12. Turn the ignition switch to ON (II).

13. Reset the ECM/PCM with the HDS.

14. Do the ECM/PCM idle learn procedure (see page 11-317).

15. Turn the ignition switch to LOCK (0), and wait 10 seconds.

16. Turn the ignition switch to ON (II).

17. Check for Temporary DTCs or DTCs with the HDS.

    Is DTC P1683 indicated?

    YES—Check for poor connections or loose terminals at the throttle body and the ECM/PCM, then go to step 1.

    NO—Troubleshooting is complete. If any other Temporary DTCs or DTCs are indicated, go to the indicated DTC's troubleshooting. ■

DTC P1684: Throttle Valve Return Spring Performance Problem

⚠CAUTION

Do not insert your fingers into the installed throttle body when you turn the ignition switch to ON (II) or while the ignition switch is ON (II). If you do, you will seriously injure your fingers if the throttle valve is activated.

NOTE: Before you troubleshoot, record all freeze data and any on-board snapshot, and review the general troubleshooting information (see page 11-3).

1. Turn the ignition switch to ON (II).

2. Clear the DTC with the HDS.

3. Start the engine. Hold the engine speed at 3,000 rpm without load (A/T in P or N, M/T in neutral) until the radiator fan comes on, then let it idle.

4. Turn the ignition switch to LOCK (0), and wait 10 seconds.

5. Turn the ignition switch to ON (II).

6. Check for Temporary DTCs or DTCs with the HDS.

   Is DTC P1684 indicated?

   YES—Go to step 7.

   NO—Intermittent failure, the system is OK at this time. Check for poor connections or loose terminals at the throttle body and the ECM/PCM. ■

7. Turn the ignition switch to LOCK (0).

8. Disconnect the intake air duct from the throttle body (see page 11-362).

9. Push the throttle valve open as shown.

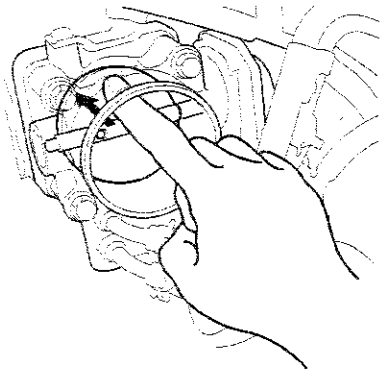

10. Release the throttle valve.

    Does the throttle valve return?

    YES—Clean the throttle body (see page 11-359), then go to step 12 and recheck. If DTC P1684 is indicated, go to step 11.

    NO—Go to step 11.

11. Replace the throttle body (see page 11-362).

12. Turn the ignition switch to ON (II).

13. Reset the ECM/PCM with the HDS.

14. Do the ECM/PCM idle learn procedure (see page 11-317).

15. Turn the ignition switch to LOCK (0), and wait 10 seconds.

16. Turn the ignition switch to ON (II).

17. Check for Temporary DTCs or DTCs with the HDS.

    Is DTC P1684 indicated?

    YES—Check for poor connections or loose terminals at the throttle body and the ECM/PCM, then go to step 1.

    NO—Troubleshooting is complete. If any other Temporary DTCs or DTCs are indicated, go to the indicated DTC's troubleshooting. ■

DTC P2101: Electronic Throttle Control System (ETCS) Malfunction

⚠CAUTION

Do not insert your fingers into the installed throttle body when you turn the ignition switch to ON (II) or while the ignition switch is ON (II). If you do, you will seriously injure your fingers if the throttle valve is activated.

NOTE: Before you troubleshoot, record all freeze data and any on-board snapshot, and review the general troubleshooting information (see page 11-3).

1. Turn the ignition switch to ON (II).

2. Clear the DTC with the HDS.

3. Do the ETCS TEST in the INSPECTION MENU with the HDS.

4. Check for Temporary DTCs or DTCs with the HDS.

   Is DTC P2101 indicated?

   YES—Go to step 7.

   NO—Go to step 5.

5. Test-drive the vehicle for several minutes in the range of these recorded freeze data parameters:

   - ENGINE SPEED
   - VSS
   - APP SENSOR

6. Check for Temporary DTCs or DTCs with the HDS.

   Is DTC P2101 indicated?

   YES—Go to step 7.

   NO—Intermittent failure, the system is OK at this time. Check for poor connections or loose terminals at the throttle body and the ECM/PCM, then clean the throttle body (see page 11-359). ■

(cont'd)

DTC Troubleshooting (cont'd)

7. Turn the ignition switch to LOCK (0).

8. Disconnect the intake air duct from the throttle body (see page 11-362).

9. Turn the ignition switch to ON (II).

10. Clear the DTC with the HDS.

11. Do the ETCS TEST in the INSPECTION MENU with the HDS.

12. Visually check the throttle valve operation.

    Does the throttle valve operate smoothly?

    YES—Clean the throttle body (see page 11-362), then go to step 22 and recheck. If DTC P2101 is indicated, go to step 19.

    NO—Go to step 13.

13. Turn the ignition switch to LOCK (0).

14. Disconnect the throttle body 6P connector.

15. Jump the SCS line with the HDS.

16. Disconnect ECM/PCM connector C (49P).

17. Connect throttle body 6P connector terminals No. 5 and No. 6 with a jumper wire.

THROTTLE BODY 6P CONNECTOR

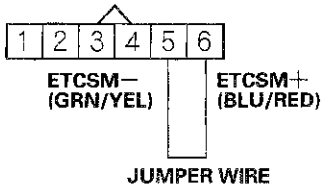

Wire side of female terminals

18. Check for continuity between ECM/PCM connector terminals C3 and C4.

ECM/PCM CONNECTOR C (49P)

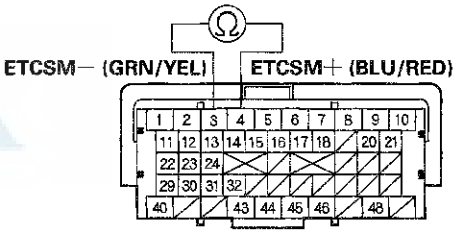

Terminal side of female terminals

Is there continuity?

YES—Go to step 27.

NO—Repair open in the wires between the throttle body and the ECM/PCM (C3, C4), then go to step 21.

19. Turn the ignition switch to LOCK (0).

20. Replace the throttle body (see page 11-362).

21. Reconnect all connectors.

22. Turn the ignition switch to ON (II).

23. Reset the ECM/PCM with the HDS.

24. Do the ECM/PCM idle learn procedure (see page 11-317).

25. Test-drive the vehicle for several minutes in the range of these recorded freeze data parameters:

    - ENGINE SPEED
    - VSS
    - APP SENSOR

26. Check for Temporary DTCs or DTCs with the HDS.

    Is DTC P2101 indicated?

    YES—Check for poor connections or loose terminals at the throttle body and the ECM/PCM, then clean the throttle body (see page 11-359), and go to step 1.

    NO—Troubleshooting is complete. If any other Temporary DTCs or DTCs are indicated, go to the indicated DTC's troubleshooting.■

27. Reconnect all connectors.

28. Update the ECM/PCM if it does not have the latest software (see page 11-215), or substitute a known-good ECM/PCM (see page 11-7).

29. Test-drive the vehicle for several minutes in the range of these recorded freeze data parameters:

    - ENGINE SPEED
    - VSS
    - APP SENSOR

30. Check for Temporary DTCs or DTCs with the HDS.

    Is DTC P2101 indicated?

    YES—Check for poor connections or loose terminals at the throttle body and the ECM/PCM. If the ECM/PCM was updated, substitute a known-good ECM/PCM (see page 11-7), then go to step 29. If the ECM/PCM was substituted, go to step 1.

    NO—If the ECM/PCM was updated, troubleshooting is complete. If the ECM/PCM was substituted, replace the original ECM/PCM (see page 11-216). If any other Temporary DTCs or DTCs are indicated, go to the indicated DTC's troubleshooting.■

DTC Troubleshooting (cont'd)

DTC P2118: Throttle Actuator Current Range/ Performance Problem

NOTE: Before you troubleshoot, record all freeze data and any on-board snapshot, and review the general troubleshooting information (see page 11-3).

1. Turn the ignition switch to ON (II).
2. Clear the DTC with the HDS.
3. Slowly press the accelerator pedal to the floor.
4. Check for Temporary DTCs or DTCs with the HDS.

   Is DTC P2118 indicated?

   YES—Go to step 5.

   NO—Intermittent failure, the system is OK at this time. Check for poor connections or loose terminals at the throttle body and the ECM/PCM.■

5. Turn the ignition switch to LOCK (0).
6. Jump the SCS line with the HDS.
7. Disconnect the throttle body 6P connector.
8. Disconnect PCM connector C (49P).
9. Check for continuity between ECM/PCM connector terminal C43 and throttle body 6P connector terminal No. 4.

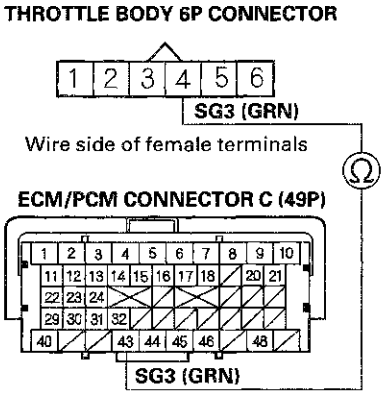

Is there continuity?

YES—Go to step 10.

NO—Repair open in the wire between the throttle body and the ECM/PCM (C43), then go to step 14.

10. Check for continuity between throttle body 6P connector terminals No. 5 and No. 6.

THROTTLE BODY 6P CONNECTOR

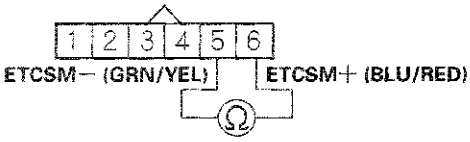

Wire side of female terminals

Is there continuity?

YES—Repair short in the wires between throttle body 6P connector terminal No. 5 (ETCS− line) and No. 6 (ETCS+ line), then go to step 14.

NO—Go to step 11.

11. Check for continuity between body ground and throttle body 6P connector terminals No. 5 and No. 6 individually.

THROTTLE BODY 6P CONNECTOR

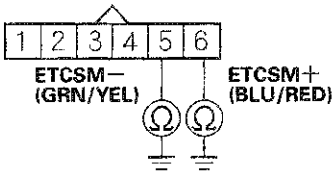

Wire side of female terminals

Is there continuity?

YES—Repair short in the wire between throttle body 6P connector and body ground, then go to step 14.

NO—Go to step 12.

(cont'd)

DTC Troubleshooting (cont'd)

12. At the throttle body side, measure the resistance between throttle body 6P connector terminals No. 5 and No. 6 with the throttle fully closed.

THROTTLE BODY 6P CONNECTOR

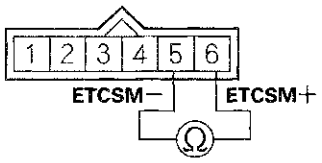

Terminal side of male terminals

Is there about 1.0 Ω or less?

YES—Go to step 13.

NO—Go to step 22.

13. Replace the throttle body (see page 11-362).
14. Reconnect all connectors.
15. Turn the ignition switch to ON (II).
16. Reset the ECM/PCM with the HDS.
17. Do the ECM/PCM idle learn procedure (see page 11-317).
18. Turn the ignition switch to LOCK (0).
19. Turn the ignition switch to ON (II).
20. Slowly press the accelerator pedal to the floor.
21. Check for Temporary DTCs or DTCs with the HDS.

    Is DTC P2118 indicated?

    YES—Check for poor connections or loose terminals at the throttle body and the ECM/PCM, then go to step 1.

    NO—Troubleshooting is complete. If any other Temporary DTCs or DTCs are indicated, go to the indicated DTC's troubleshooting.■

22. Reconnect all connectors.
23. Update the ECM/PCM if it does not have the latest software (see page 11-215), or substitute a known-good ECM/PCM (see page 11-7).
24. Turn the ignition switch to LOCK (0).
25. Turn the ignition switch to ON (II).
26. Slowly press the accelerator pedal to the floor.
27. Check for Temporary DTCs or DTCs with the HDS.

    Is DTC P2118 indicated?

    YES—Check for poor connections or loose terminals at the throttle body and the ECM/PCM. If the ECM/PCM was updated, substitute a known-good ECM/PCM (see page 11-7), then go to step 27. If the ECM/PCM was substituted, go to step 1.

    NO—If the ECM/PCM was updated, troubleshooting is complete. If the ECM/PCM was substituted, replace the original ECM/PCM (see page 11-216). If any other Temporary DTCs or DTCs are indicated, go to the indicated DTC's troubleshooting.■

DTC P2122: APP Sensor A (TP Sensor D) Circuit Low Voltage

NOTE: Before you troubleshoot, record all freeze data and any on-board snapshot, and review the general troubleshooting information (see page 11-3).

1. Turn the ignition switch to ON (II).

2. Check APP SENSOR A in the DATA LIST with the HDS.

   Is there about 0.2 V or less?

   YES—Go to step 3.

   NO—Intermittent failure, the system is OK at this time. Check for poor connections or loose terminals at the APP sensor and the ECM/PCM. ■

3. Turn the ignition switch to LOCK (0).

4. Disconnect the APP sensor 6P connector.

5. Turn the ignition switch to ON (II).

6. Measure the voltage between APP sensor 6P connector terminals No. 2 and No. 3.

APP SENSOR 6P CONNECTOR

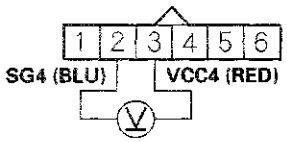

Wire side of female terminals

Is there about 5 V?

YES—Go to step 7.

NO—Go to step 17.

7. Turn the ignition switch to LOCK (0).

8. Jump the SCS line with the HDS.

9. Disconnect ECM/PCM connector A (49P).

10. Check for continuity between APP sensor 6P connector terminal No. 1 and body ground.

APP SENSOR 6P CONNECTOR

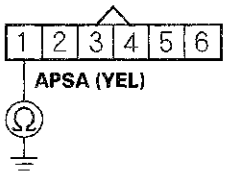

Wire side of female terminals

Is there continuity?

YES—Repair short in the wire between the ECM/PCM (A18) and the APP sensor, then go to step 24.

NO—Go to step 11.

11. Connect APP sensor 6P connector terminal No. 1 to body ground with a jumper wire.

APP SENSOR 6P CONNECTOR

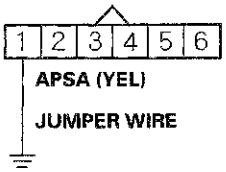

Wire side of female terminals

(cont'd)

DTC Troubleshooting (cont'd)

12. Check for continuity between ECM/PCM connector terminal A18 and body ground.

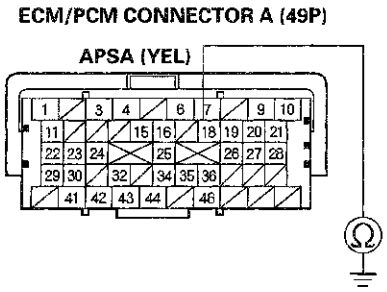

Terminal side of female terminals

Is there continuity?

YES—Go to step 13.

NO—Repair open in the wire between the ECM/PCM (A18) and the APP sensor, then go to step 24.

13. Reconnect ECM/PCM connector A (49P).

14. Connect APP sensor 6P connector terminals No. 1 and No. 3 with a jumper wire.

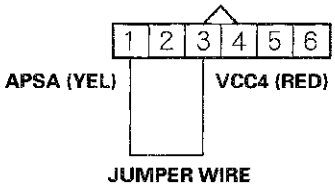

Wire side of female terminals

15. Turn the ignition switch to ON (II).

16. Check APP SENSOR A in the DATA LIST with the HDS.

Is there about 0.2 V or less?

YES—Go to step 29.

NO—Go to step 22.

17. Turn the ignition switch to LOCK (0).

18. Jump the SCS line with the HDS.

19. Disconnect ECM/PCM connector A (49P).

20. Connect APP sensor 6P connector terminal No. 3 to body ground with a jumper wire.

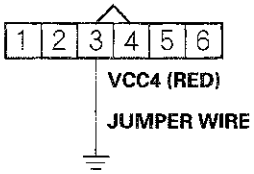

Wire side of female terminals

21. Check for continuity between ECM/PCM connector terminal A26 and body ground.

ECM/PCM CONNECTOR A (49P)

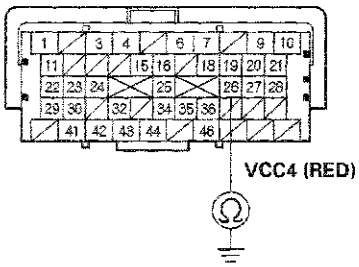

Terminal side of female terminals

Is there continuity?

YES—Go to step 30.

NO—Repair open in the wire between the ECM/PCM (A26) and the APP sensor, then go to step 24.

22. Turn the ignition switch to LOCK (0).

23. Replace the accelerator pedal module (see page 11-259).

24. Reconnect all connectors.

25. Turn the ignition switch to ON (II).

26. Reset the ECM/PCM with the HDS.

27. Do the ECM/PCM idle learn procedure (see page 11-317).

28. Check for Temporary DTCs or DTCs with the HDS.

Is DTC P2122 indicated?

YES—Check for poor connections or loose terminals at the APP sensor and the ECM/PCM, then go to step 1.

NO—Troubleshooting is complete. If any other Temporary DTCs or DTCs are indicated, go to the indicated DTC's troubleshooting. ■

29. Turn the ignition switch to LOCK (0).

30. Reconnect all connectors.

31. Update the ECM/PCM if it does not have the latest software (see page 11-215), or substitute a known-good ECM/PCM (see page 11-7).

32. Check for Temporary DTCs or DTCs with the HDS.

Is DTC P2122 indicated?

YES—Check for poor connections or loose terminals at the APP sensor and the ECM/PCM. If the ECM/PCM was updated, substitute a known-good ECM/PCM (see page 11-7), then recheck. If the ECM/PCM was substituted, go to step 1.

NO—If the ECM/PCM was updated, troubleshooting is complete. If the ECM/PCM was substituted, replace the original ECM/PCM (see page 11-216). If any other Temporary DTCs or DTCs are indicated, go to the indicated DTC's troubleshooting. ■

DTC Troubleshooting (cont'd)

DTC P2123: APP Sensor A (TP Sensor D) Circuit High Voltage

NOTE: Before you troubleshoot, record all freeze data and any on-board snapshot, and review the general troubleshooting information (see page 11-3).

1. Turn the ignition switch to ON (II).
2. Check APP SENSOR A in the DATA LIST with the HDS.

   Is there about 4.9 V or more?

   YES—Go to step 3.

   NO—Intermittent failure, the system is OK at this time. Check for poor connections or loose terminals at the APP sensor and the ECM/PCM.■

3. Turn the ignition switch to LOCK (0).
4. Disconnect the APP sensor 6P connector.
5. Turn the ignition switch to ON (II).
6. Measure the voltage between APP sensor 6P connector terminals No. 2 and No. 3.

APP SENSOR 6P CONNECTOR

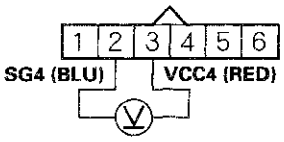

Wire side of female terminals

Is there about 5 V?

YES—Go to step 12.

NO—Go to step 7.

7. Turn the ignition switch to LOCK (0).
8. Jump the SCS line with the HDS.
9. Disconnect ECM/PCM connector A (49P).
10. Connect APP sensor 6P connector terminal No. 2 to body ground with a jumper wire.

APP SENSOR 6P CONNECTOR

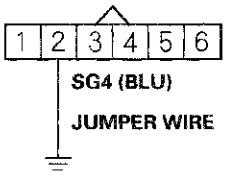

Wire side of female terminals

11. Check for continuity between ECM/PCM connector terminal A36 and body ground.

ECM/PCM CONNECTOR A (49P)

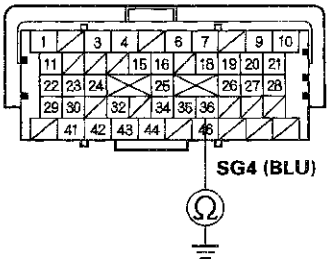

Terminal side of female terminals

Is there continuity?

YES—Go to step 19.

NO—Repair open in the wire between the ECM/PCM (A36) and the APP sensor, then go to step 14.

12. Turn the ignition switch to LOCK (0).

13. Replace the accelerator pedal module (see page 11-259).

14. Reconnect all connectors.

15. Turn the ignition switch to ON (II).

16. Reset the ECM/PCM with the HDS.

17. Do the ECM/PCM idle learn procedure (see page 11-317).

18. Check for Temporary DTCs or DTCs with the HDS.

    Is DTC P2123 indicated?

    YES—Check for poor connections or loose terminals at the APP sensor and the ECM/PCM, then go to step 1.

    NO—Troubleshooting is complete. If any other Temporary DTCs or DTCs are indicated, go to the indicated DTC's troubleshooting. ■

19. Reconnect all connectors.

20. Update the ECM/PCM if it does not have the latest software (see page 11-215), or substitute a known-good ECM/PCM (see page 11-7).

21. Check for Temporary DTCs or DTCs with the HDS.

    Is DTC P2123 indicated?

    YES—Check for poor connections or loose terminals at the APP sensor and the ECM/PCM. If the ECM/PCM was updated, substitute a known-good ECM/PCM (see page 11-7), then recheck. If the ECM/PCM was substituted, go to step 1.

    NO—If the ECM/PCM was updated, troubleshooting is complete. If the ECM/PCM was substituted, replace the original ECM/PCM (see page 11-216). If any other Temporary DTCs or DTCs are indicated, go to the indicated DTC's troubleshooting. ■

DTC P2127: APP Sensor B (TP Sensor E) Circuit Low Voltage

NOTE: Before you troubleshoot, record all freeze data and any on-board snapshot, and review the general troubleshooting information (see page 11-3).

1. Turn the ignition switch to ON (II).

2. Check APP SENSOR B in the DATA LIST with the HDS.

   Is there about 0.2 V or less?

   YES—Go to step 3.

   NO—Intermittent failure, the system is OK at this time. Check for poor connections or loose terminals at the APP sensor and the ECM/PCM. ■

3. Turn the ignition switch to LOCK (0).

4. Disconnect the APP sensor 6P connector.

5. Turn the ignition switch to ON (II).

6. Measure the voltage between APP sensor 6P connector terminals No. 5 and No. 6.

APP SENSOR 6P CONNECTOR

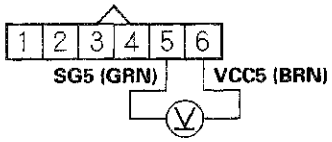

Wire side of female terminals

Is there about 5 V?

YES—Go to step 7.

NO—Go to step 17.

(cont'd)

DTC Troubleshooting (cont'd)

7. Turn the ignition switch to LOCK (0).
8. Jump the SCS line with the HDS.
9. Disconnect ECM/PCM connector A (49P).
10. Check for continuity between APP sensor 6P connector terminal No. 4 and body ground.

APP SENSOR 6P CONNECTOR

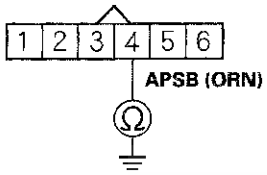

Wire side of female terminals

Is there continuity?

YES—Repair short in the wire between the ECM/PCM (A19) and the APP sensor, then go to step 24.

NO—Go to step 11.

11. Connect APP sensor 6P connector terminal No. 4 to body ground with a jumper wire.

APP SENSOR 6P CONNECTOR

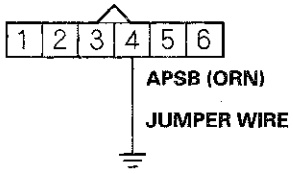

Wire side of female terminals

12. Check for continuity between ECM/PCM connector terminal A19 and body ground.

ECM/PCM CONNECTOR A (49P)

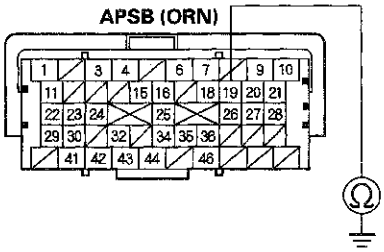

Terminal side of female terminals

Is there continuity?

YES—Go to step 13.

NO—Repair open in the wire between the ECM/PCM (A19) and the APP sensor, then go to step 24.

13. Reconnect ECM/PCM connector A (49P).
14. Connect APP sensor 6P connector terminals No. 4 and No. 6 with a jumper wire.

APP SENSOR 6P CONNECTOR

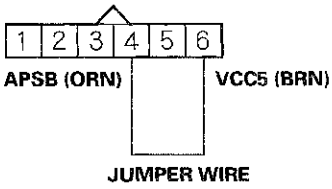

Wire side of female terminals

15. Turn the ignition switch to ON (II).

16. Check APP SENSOR B in the DATA LIST with the HDS.

    Is there about 0.2 V or less?

    YES—Go to step 29.

    NO—Go to step 22.

17. Turn the ignition switch to LOCK (0).

18. Jump the SCS line with the HDS.

19. Disconnect ECM/PCM connector A (49P).

20. Connect APP sensor 6P connector terminal No. 6 to body ground with a jumper wire.

APP SENSOR 6P CONNECTOR

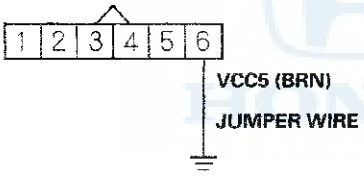

Wire side of female terminals

21. Check for continuity between ECM/PCM connector terminal A25 and body ground.

ECM/PCM CONNECTOR A (49P)

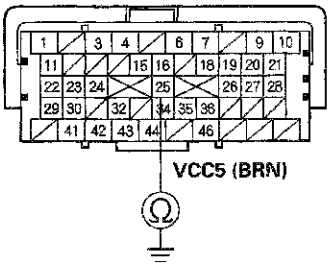

Terminal side of female terminals

    Is there continuity?

    YES—Go to step 30.

    NO—Repair open in the wire between the ECM/PCM (A25) and the APP sensor, then go to step 24.

22. Turn the ignition switch to LOCK (0).

23. Replace the accelerator pedal module (see page 11-259).

24. Reconnect all connectors.

25. Turn the ignition switch to ON (II).

26. Reset the ECM/PCM with the HDS.

27. Do the ECM/PCM idle learn procedure (see page 11-317).

28. Check for Temporary DTCs or DTCs with the HDS.

    Is DTC P2127 indicated?

    YES—Check for poor connections or loose terminals at the APP sensor and the ECM/PCM, then go to step 1.

    NO—Troubleshooting is complete. If any other Temporary DTCs or DTCs are indicated, go to the indicated DTC's troubleshooting. ■

(cont'd)

DTC Troubleshooting (cont'd)

29. Turn the ignition switch to LOCK (0).

30. Reconnect all connectors.

31. Update the ECM/PCM if it does not have the latest software (see page 11-215), or substitute a known-good ECM/PCM (see page 11-7).

32. Check for Temporary DTCs or DTCs with the HDS.

    Is DTC P2127 indicated?

    YES—Check for poor connections or loose terminals at the APP sensor and the ECM/PCM. If the ECM/PCM was updated, substitute a known-good ECM/PCM (see page 11-7), then recheck. If the ECM/PCM was substituted, go to step 1.

    NO—If the ECM/PCM was updated, troubleshooting is complete. If the ECM/PCM was substituted, replace the original ECM/PCM (see page 11-216). If any other Temporary DTCs or DTCs are indicated, go to the indicated DTC's troubleshooting. ■

DTC P2128: APP Sensor B (TP Sensor E) Circuit High Voltage

NOTE: Before you troubleshoot, record all freeze data and any on-board snapshot, and review the general troubleshooting information (see page 11-3).

1. Turn the ignition switch to ON (II).

2. Check APP SENSOR B in the DATA LIST with the HDS.

   Is there about 4.9 V or more?

   YES—Go to step 3.

   NO—Intermittent failure, the system is OK at this time. Check for poor connections or loose terminals at the APP sensor and the ECM/PCM. ■

3. Turn the ignition switch to LOCK (0).

4. Disconnect the APP sensor 6P connector.

5. Turn the ignition switch to ON (II).

6. Measure the voltage between APP sensor 6P connector terminals No. 5 and No. 6.

APP SENSOR 6P CONNECTOR

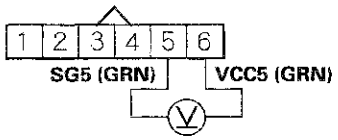

Wire side of female terminals

Is there about 5 V?

YES—Go to step 12.

NO—Go to step 7.

7. Turn the ignition switch to LOCK (0).

8. Jump the SCS line with the HDS.

9. Disconnect ECM/PCM connector A (49P).

10. Connect APP sensor 6P connector terminal No. 5 to body ground with a jumper wire.

APP SENSOR 6P CONNECTOR

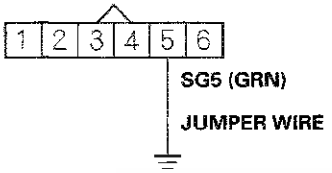

Wire side of female terminals

11. Check for continuity between ECM/PCM connector terminal A35 and body ground.

ECM/PCM CONNECTOR A (49P)

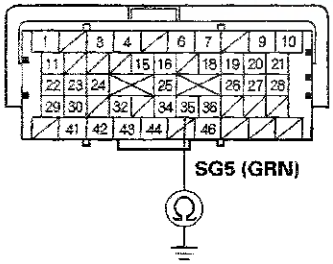

Terminal side of female terminals

Is there continuity?

YES—Go to step 19.

NO—Repair open in the wire between the ECM/PCM (A35) and the APP sensor, then go to step 14.

12. Turn the ignition switch to LOCK (0).

13. Replace the accelerator pedal module (see page 11-259).

14. Reconnect all connectors.

15. Turn the ignition switch to ON (II).

16. Reset the ECM/PCM with the HDS.

17. Do the ECM/PCM idle learn procedure (see page 11-317).

18. Check for Temporary DTCs or DTCs with the HDS.

Is DTC P2128 indicated?

YES—Check for poor connections or loose terminals at the APP sensor and the ECM/PCM, then go to step 1.

NO—Troubleshooting is complete. If any other Temporary DTCs or DTCs are indicated, go to the indicated DTC's troubleshooting. ■

19. Reconnect all connectors.

20. Update the ECM/PCM if it does not have the latest software (see page 11-215), or substitute a known-good ECM/PCM (see page 11-7).

21. Check for Temporary DTCs or DTCs with the HDS.

Is DTC P2128 indicated?

YES—Check for poor connections or loose terminals at the APP sensor and the ECM/PCM. If the ECM/PCM was updated, substitute a known-good ECM/PCM (see page 11-7), then recheck. If the ECM/PCM was substituted, go to step 1.

NO—If the ECM/PCM was updated, troubleshooting is complete. If the ECM/PCM was substituted, replace the original ECM/PCM (see page 11-216). If any other Temporary DTCs or DTCs are indicated, go to the indicated DTC's troubleshooting. ■

DTC Troubleshooting (cont'd)

DTC P2135: TP Sensor A/B Incorrect Voltage Correlation

⚠CAUTION

Do not insert your fingers into the installed throttle body when you turn the ignition switch to ON (II) or while the ignition switch is ON (II). If you do, you will seriously injure your fingers if the throttle valve is activated.

NOTE: Before you troubleshoot, record all freeze data and any on-board snapshot, and review the general troubleshooting information (see page 11-3).

1. Turn the ignition switch to ON (II).
2. Clear the DTC with the HDS.
3. Do the ETCS TEST in the INSPECTION MENU with the HDS.
4. Check for Temporary DTCs or DTCs with the HDS.

   Is DTC P2135 indicated?

   YES—Go to step 5.

   NO—Intermittent failure, the system is OK at this time. Check for poor connections or loose terminals at the throttle body and the ECM/PCM. ■
5. Turn the ignition switch to LOCK (0).
6. Disconnect the intake air duct from the throttle body (see page 11-362).
7. Turn the ignition switch to ON (II).
8. Visually check the throttle valve operation while you clear the DTC with the HDS.

   Does the valve temporarily move to its fully closed position?

   YES—Go to step 15.

   NO—Go to step 9.
9. Turn the ignition switch to LOCK (0).
10. Jump the SCS line with the HDS.
11. Disconnect ECM/PCM connector C (49P).
12. Check for continuity between ECM/PCM connector terminals C20 and C21.

ECM/PCM CONNECTOR C (49P)

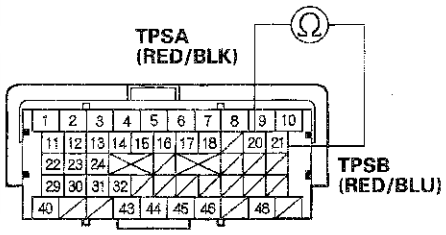

Terminal side of female terminals

Is there continuity?

YES—Go to step 13.

NO—Go to step 22.

13. Disconnect the throttle body 6P connector.

14. Check for continuity between ECM/PCM connector terminals C20 and C21.

ECM/PCM CONNECTOR C (49P)

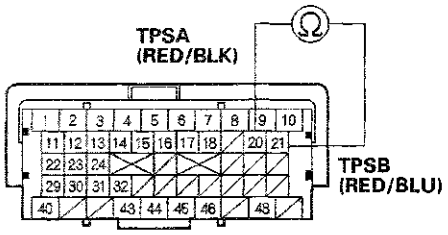

Terminal side of female terminals

Is there continuity?

YES—Repair short in the wires between the ECM/PCM C20 (TPSA line) and the C21 (TPSB line), then go to step 17.

NO—Go to step 15.

15. Turn the ignition switch to LOCK (0).

16. Replace the throttle body (see page 11-362).

17. Reconnect all connectors.

18. Turn the ignition switch to ON (II).

19. Reset the ECM/PCM with the HDS.

20. Do the ECM/PCM idle learn procedure (see page 11-317).

21. Check for Temporary DTCs or DTCs with the HDS.

Is DTC P2135 indicated?

YES—Check for poor connections or loose terminals at the throttle body and the ECM/PCM, then go to step 1.

NO—Troubleshooting is complete. If any other Temporary DTCs or DTCs are indicated, go to the indicated DTC's troubleshooting. ■

22. Reconnect all connectors.

23. Update the ECM/PCM if it does not have the latest software (see page 11-215), or substitute a known-good ECM/PCM (see page 11-7).

24. Check for Temporary DTCs or DTCs with the HDS.

Is DTC P2135 indicated?

YES—Check for poor connections or loose terminals at the throttle body and the ECM/PCM. If the ECM/PCM was updated, substitute a known-good ECM/PCM (see page 11-7), then recheck. If the ECM/PCM was substituted, go to step 1.

NO—If the ECM/PCM was updated, troubleshooting is complete. If the ECM/PCM was substituted, replace the original ECM/PCM (see page 11-216). If any other Temporary DTCs or DTCs are indicated, go to the indicated DTC's troubleshooting. ■

DTC Troubleshooting (cont'd)

DTC P2138: APP Sensor A/B (TP Sensor D/E) Incorrect Voltage Correlation

NOTE: Before you troubleshoot, record all freeze data and any on-board snapshot, and review the general troubleshooting information (see page 11-3).

1. Turn the ignition switch to ON (II).
2. Clear the DTC with HDS.
3. Press the accelerator pedal to the floor.
4. Check for Temporary DTCs or DTCs with the HDS.

   Is DTC P2138 indicated?

   YES—Go to step 5.

   NO—Intermittent failure, the system is OK at this time. Check for poor connections or loose terminals at the APP sensor and the ECM/PCM. ■

5. Check APP SENSOR A and APP SENSOR B in the DATA LIST with the HDS.

   Are they the same voltage?

   YES—Go to step 6.

   NO—Go to step 12.

6. Turn the ignition switch to LOCK (0).
7. Jump the SCS line with the HDS.
8. Disconnect ECM/PCM connector A (49P).
9. Check for continuity between ECM/PCM connector terminals A18 and A19.

ECM/PCM CONNECTOR A (49P)

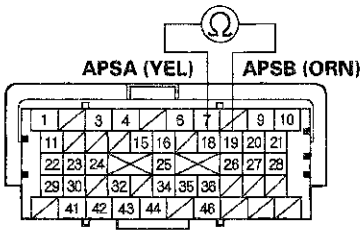

Terminal side of female terminals

Is there continuity?

YES—Go to step 10.

NO—Go to step 22.

10. Disconnect the APP sensor 6P connector.
11. Check for continuity between ECM/PCM connector terminals A18 and A19.

ECM/PCM CONNECTOR A (49P)

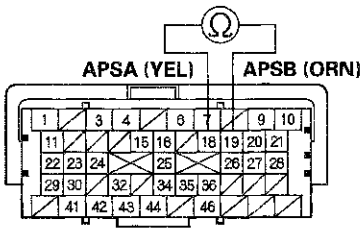

Terminal side of female terminals

Is there continuity?

YES—Repair short in the wires between ECM/PCM connector terminals A18 (APSA line) and A19 (APSB line), then go to step 14.

NO—Go to step 13.

12. Turn the ignition switch to LOCK (0).

13. Replace the accelerator pedal module (see page 11-259).

14. Reconnect all connectors.

15. Turn the ignition switch to ON (II).

16. Reset the ECM/PCM with the HDS.

17. Do the ECM/PCM idle learn procedure (see page 11-317).

18. Turn the ignition switch to LOCK (0).

19. Turn the ignition switch to ON (II).

20. Press the accelerator pedal to the floor.

21. Check for Temporary DTCs or DTCs with the HDS.

    Is DTC P2138 indicated?

    YES—Check for poor connections or loose terminals at the APP sensor and the ECM/PCM, then go to step 1.

    NO—Troubleshooting is complete. If any other Temporary DTCs or DTCs are indicated, go to the indicated DTC's troubleshooting. ■

22. Reconnect all connectors.

23. Update the ECM/PCM if it does not have the latest software (see page 11-215), or substitute a known-good ECM/PCM (see page 11-7).

24. Turn the ignition switch to LOCK (0).

25. Turn the ignition switch to ON (II).

26. Press the accelerator pedal to the floor.

27. Check for Temporary DTCs or DTCs with the HDS.

    Is DTC P2138 indicated?

    YES—Check for poor connections or loose terminals at the APP sensor and the ECM/PCM. If the ECM/PCM was updated, substitute a known-good ECM/PCM (see page 11-7), then go to step 24. If the ECM/PCM was substituted, go to step 1.

    NO—If the ECM/PCM was updated, troubleshooting is complete. If the ECM/PCM was substituted, replace the original ECM/PCM (see page 11-216). If any other Temporary DTCs or DTCs are indicated, go to the indicated DTC's troubleshooting. ■

HONDA

DTC Troubleshooting (cont'd)

DTC P2176: Throttle Actuator Control System Idle Position Not Learned

⚠CAUTION

Do not insert your fingers into the installed throttle body when you turn the ignition switch to ON (II) or while the ignition switch is ON (II). If you do, you will seriously injure your fingers if the throttle valve is activated.

NOTE:
- Before you troubleshoot, record all freeze data and any on-board snapshot, and review the general troubleshooting information (see page 11-3).
- If DTC P2135 is stored at the same time as DTC P2176, troubleshoot DTC P2135 first, then recheck for DTC P2176.

1. Turn the ignition switch to ON (II).
2. Clear the DTC with the HDS.
3. Turn the ignition switch to LOCK (0).
4. Turn the ignition switch to ON (II), and wait 10 seconds.
5. Check for Temporary DTCs or DTCs with the HDS.

   Is DTC P2176 indicated?

   YES—Go to step 6.

   NO—Intermittent failure, the system is OK at this time. Check for poor connections or loose terminals at the throttle body and the ECM/PCM, then clean the throttle body (see page 11-359). ■
6. Turn the ignition switch to LOCK (0).
7. Disconnect the intake air duct from the throttle body (see page 11-362).
8. Turn the ignition switch to ON (II).
9. Clear the DTC with the HDS.
10. Visually check the throttle valve operation while performing the ETCS TEST in the INSPECTION MENU with the HDS.

    Does the throttle valve move to its fully closed position?

    YES—Go to step 11.

    NO—Go to step 12.
11. Check for sludge or carbon on the throttle valve.

    Is there sludge or carbon on the throttle valve?

    YES—Clean the throttle body (see page 11-359), then go to step 21 and recheck.

    NO—Go to step 18.
12. Turn the ignition switch to LOCK (0).
13. Disconnect the throttle body 6P connector.
14. Jump the SCS line with the HDS.
15. Disconnect ECM/PCM connector C (49P).
16. Connect throttle body 6P connector terminals No. 5 and No. 6 with a jumper wire.

THROTTLE BODY 6P CONNECTOR

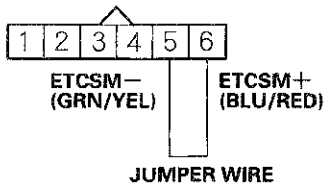

Wire side of female terminals

17. Check for continuity between ECM/PCM connector terminals C3 and C4.

ECM/PCM CONNECTOR C (49P)

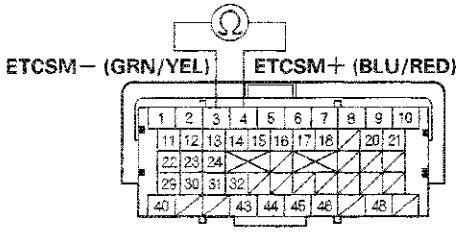

Terminal side of female terminals

Is there continuity?

YES—Go to step 27.

NO—Repair open in the wires between the throttle body and the ECM/PCM (C3, C4), then go to step 20.

18. Turn the ignition switch to LOCK (0).

19. Replace the throttle body (see page 11-362).

20. Reconnect all connectors.

21. Turn the ignition switch to ON (II).

22. Reset the ECM/PCM with the HDS.

23. Do the ECM/PCM idle learn procedure (see page 11-317).

24. Turn the ignition switch to LOCK (0).

25. Turn the ignition switch to ON (II), and wait 10 seconds.

26. Check for Temporary DTCs or DTCs with the HDS.

Is DTC P2176 indicated?

YES—Check for poor connections or loose terminals at the throttle body and the ECM/PCM, then clean the throttle body (see page 11-359), and go to step 1.

NO—Troubleshooting is complete. If any other Temporary DTCs or DTCs are indicated, go to the indicated DTC's troubleshooting. ■

27. Reconnect all connectors.

28. Update the ECM/PCM if it does not have the latest software (see page 11-215), or substitute a known-good ECM/PCM (see page 11-7).

29. Check for Temporary DTCs or DTCs with the HDS.

Is DTC P2176 indicated?

YES—Check for poor connections or loose terminals at the throttle body and the ECM/PCM. If the ECM/PCM was updated, substitute a known-good ECM/PCM (see page 11-7), then recheck. If the ECM/PCM was substituted, go to step 1.

NO—If the ECM/PCM was updated, troubleshooting is complete. If the ECM/PCM was substituted, replace the original ECM/PCM (see page 11-216). If any other Temporary DTCs or DTCs are indicated, go to the indicated DTC's troubleshooting. ■

APP Sensor Signal Inspection

NOTE:
- This procedure checks the APP sensor in its fully closed position. In any other position, the APP sensor stores DTCs which are covered in other troubleshooting procedures.
- Check for Temporary DTCs or DTCs with the HDS before doing this procedure. If any DTCs are indicated, troubleshoot them first, then do this procedure.
- Press the accelerator pedal several times, to check its operation. If it does not operate smoothly, check the pedal. If you find a problem, replace the accelerator pedal module (see page 11-259).

1. Connect the HDS to the data link connector (DLC) (A) located under the driver's side of the dashboard.

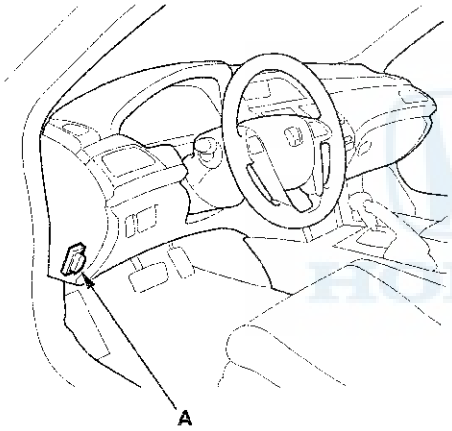

2. Turn the ignition switch to ON (II).

3. Make sure the HDS communicates with the ECM/PCM. If it doesn't, go to the DLC circuit troubleshooting (see page 11-192).

4. Make sure the accelerator pedal is not pressed, then check the APP SENSOR in the DATA LIST with the HDS.

   - If it is 0 %, the APP sensor is OK.
   - If it is not 0 %, update the ECM/PCM if it does not have the latest software (see page 11-215), or substitute a known-good ECM/PCM (see page 11-7), then go to step 5.

5. Make sure the accelerator pedal is not pressed, then check the APP SENSOR in the DATA LIST with the HDS.

   - If it is 0 %, the APP sensor is OK.
   - If it is not 0 %, replace the accelerator pedal module (see page 11-259), then go to step 1.

Accelerator Pedal Module Removal/Installation

1. Disconnect the APP sensor connector (A).

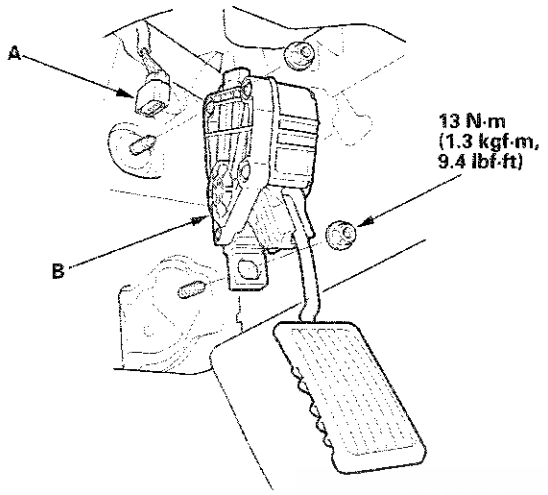

2. Remove the accelerator pedal module (B).

   NOTE: The APP sensor is not available separately. Do not disassemble the accelerator pedal module.

3. Install the parts in the reverse order of removal.

Component Location Index

All models except PZEV

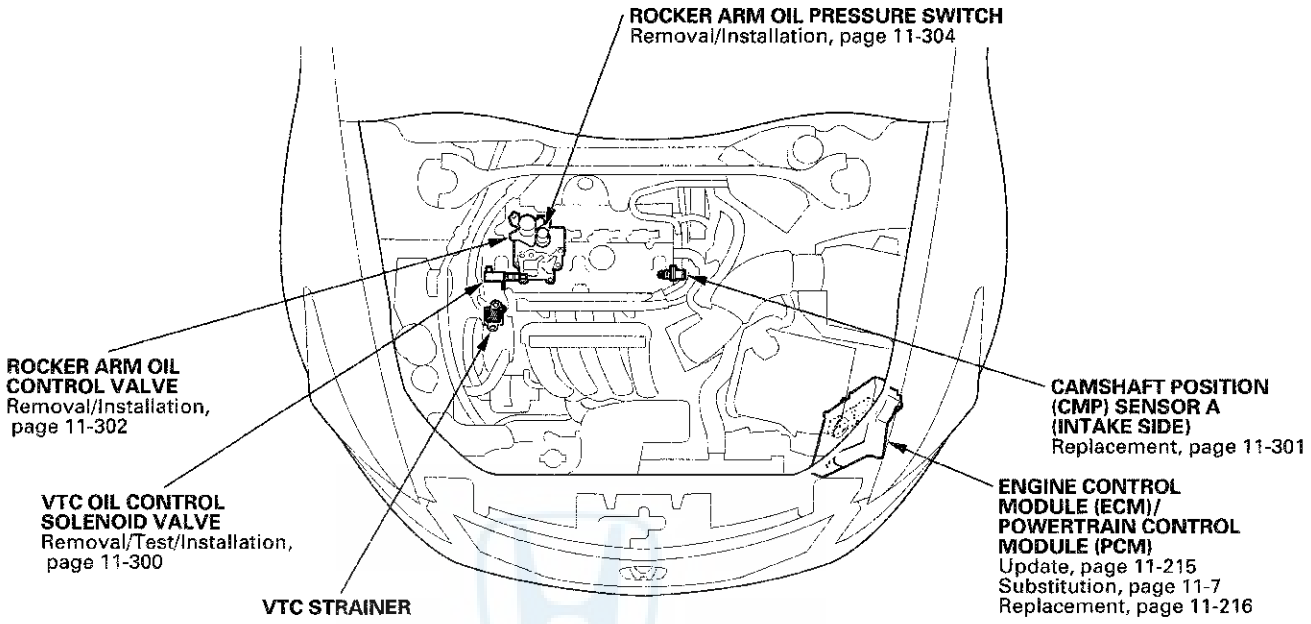

PZEV model

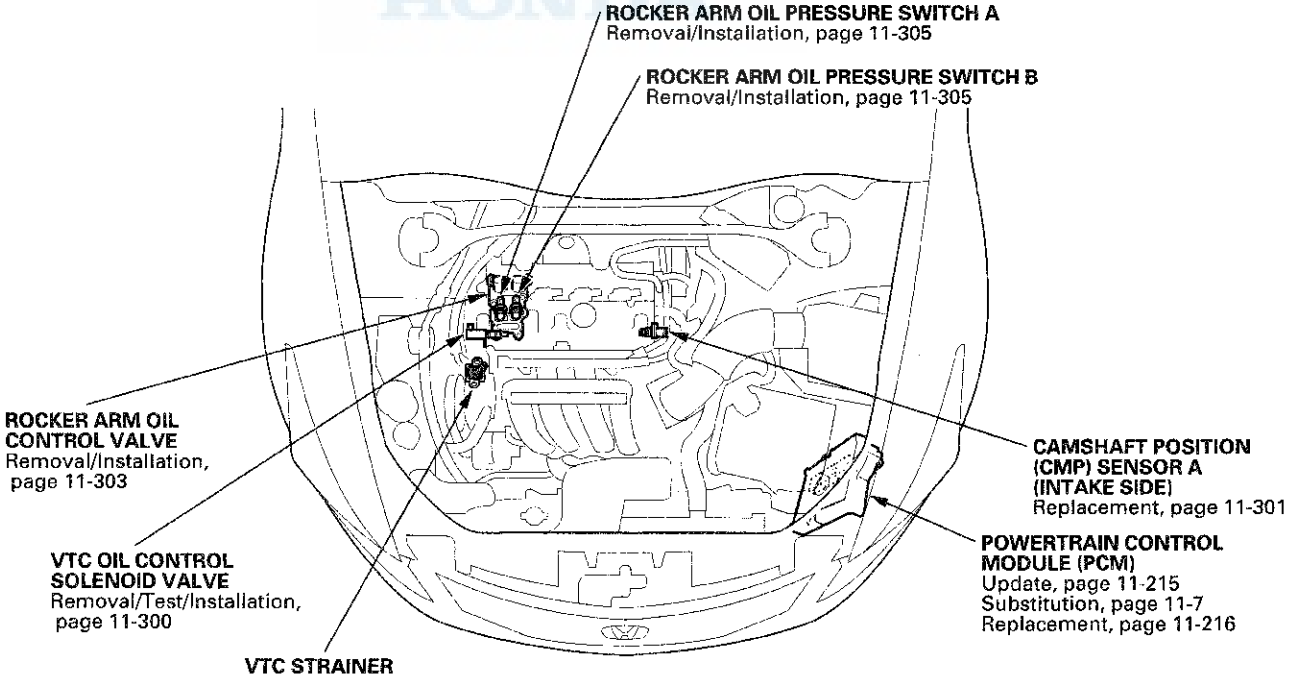

DTC Troubleshooting

DTC P0010: VTC Oil Control Solenoid Valve Malfunction

NOTE: Before you troubleshoot, record all freeze data and any on-board snapshot, and review the general troubleshooting information (see page 11-3).

1. Turn the ignition switch to ON (II).
2. Clear the DTC with the HDS.
3. Start the engine. Hold the engine speed at 3,000 rpm without load (A/T in P or N, M/T in neutral) until the radiator fan comes on, then let it idle.
4. Do the VTC TEST in the INSPECTION MENU with the HDS.
5. Check for Temporary DTCs or DTCs with the HDS.

   Is DTC P0010 indicated?

   YES—Go to step 6.

   NO—Intermittent failure, the system is OK at this time. Check for poor connections or loose terminals at the VTC oil control solenoid valve and the ECM/PCM.■

6. Turn the ignition switch to LOCK (0).
7. Disconnect the VTC oil control solenoid valve 2P connector.
8. At the solenoid valve side, measure the resistance between VTC oil control solenoid valve 2P connector terminals No. 1 and No. 2.

VTC OIL CONTROL SOLENOID VALVE 2P CONNECTOR

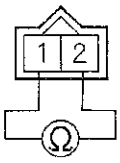

Terminal side of male terminals

Is there 6.75—8.25 Ω at room temperature?

YES—Go to step 9.

NO—Go to step 14.

(cont'd)

DTC Troubleshooting (cont'd)

9. Check for continuity between VTC oil control solenoid valve 2P connector terminal No. 1 and body ground.

VTC OIL CONTROL SOLENOID VALVE 2P CONNECTOR

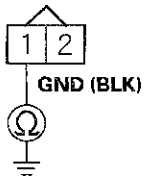

Wire side of female terminals

Is there continuity?

YES—Go to step 10.

NO—Repair open in the wire between the VTC oil control solenoid valve and G101 (see page 22-20), then go to step 15.

10. Jump the SCS line with the HDS.

11. Disconnect ECM/PCM connector C (49P).

12. Check for continuity between ECM/PCM connector terminal C23 and body ground.

ECM/PCM CONNECTOR C (49P)

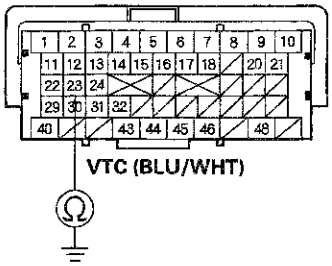

Terminal side of female terminals

Is there continuity?

YES—Repair short in the wire between the ECM/PCM (C23) and the VTC oil control solenoid valve, then go to step 15.

NO—Go to step 13.

13. Check for continuity between VTC oil control solenoid valve 2P connector terminal No. 2 and ECM/PCM connector terminal C23.

VTC OIL CONTROL SOLENOID VALVE 2P CONNECTOR

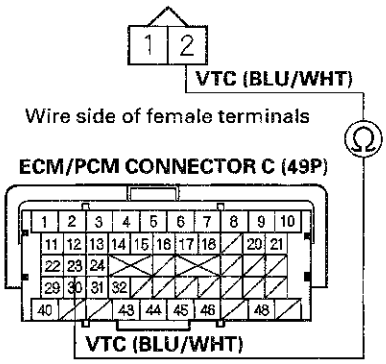

Terminal side of female terminals

Is there continuity?

YES—Go to step 22.

NO—Repair open in the wire between the ECM/PCM (C23) and the VTC oil control solenoid valve, then go to step 15.

14. Replace the VTC oil control solenoid valve (see page 11-300).

15. Reconnect all connectors.

16. Turn the ignition switch to ON (II).

17. Reset the ECM/PCM with the HDS.

18. Do the ECM/PCM idle learn procedure (see page 11-317).

19. Do the VTC TEST in the INSPECTION MENU with the HDS.

20. Check for Temporary DTCs or DTCs with the HDS.

    Is DTC P0010 indicated?

    YES—Check for poor connections or loose terminals at the VTC oil control solenoid valve and the ECM/PCM, then go to step 1.

    NO—Go to step 21.

21. Monitor the OBD STATUS for DTC P0010 in the DTCs MENU with the HDS.

    Does the screen indicate PASSED?

    YES—Troubleshooting is complete. If any other Temporary DTCs or DTCs were indicated in step 20, go to the indicated DTC's troubleshooting. ■

    NO—If the screen indicates FAILED, check for poor connections or loose terminals at the VTC oil control solenoid valve and the ECM/PCM, then go to step 1. If the screen indicates NOT COMPLETED, go to step 19.

22. Reconnect all connectors.

23. Update the ECM/PCM if it does not have the latest software (see page 11-215), or substitute a known-good ECM/PCM (see page 11-7).

24. Do the VTC TEST in the INSPECTION MENU with the HDS.

25. Check for Temporary DTCs or DTCs with the HDS.

    Is DTC P0010 indicated?

    YES—Check for poor connections or loose terminals at the VTC oil control solenoid valve and the ECM/PCM. If the ECM/PCM was updated, substitute a known-good ECM/PCM (see page 11-7), then go to step 24. If the ECM/PCM was substituted, go to step 1.

    NO—Go to step 26.

26. Monitor the OBD STATUS for DTC P0010 in the DTCs MENU with the HDS.

    Does the screen indicate PASSED?

    YES—If the ECM/PCM was updated, troubleshooting is complete. If the ECM/PCM was substituted, replace the original ECM/PCM (see page 11-216). If any other Temporary DTCs or DTCs were indicated in step 25, go to the indicated DTC's troubleshooting. ■

    NO—If the screen indicates FAILED, check for poor connections or loose terminals at the VTC oil control solenoid valve and the ECM/PCM. If the ECM/PCM was updated, substitute a known-good ECM/PCM (see page 11-7), then go to step 24. If the ECM/PCM was substituted, go to step 1. If the screen indicates NOT COMPLETED, go to step 24.

DTC Troubleshooting (cont'd)

DTC P0011: VTC System Malfunction

NOTE: Before you troubleshoot, record all freeze data and any on-board snapshot, and review the general troubleshooting information (see page 11-3).

1. Turn the ignition switch to ON (II).
2. Clear the DTC with the HDS.
3. Start the engine.
4. Watch the low oil pressure indicator with the engine running.

   Is the low oil pressure indicator on?

   YES—Check the oil pressure (see page 8-9), then go to step 15.

   NO—Go to step 5.
5. Do the VTC TEST in the INSPECTION MENU with the HDS.

   Is the result OK?

   YES—Go to step 6.

   NO—Go to step 9.
6. Test-drive at a steady speed between 19—38 mph (30—60 km/h) for 10 minutes.
7. Check the VTC STATUS in the DATA LIST with the HDS.

   Does it indicate ON?

   YES—Go to step 8.

   NO—Go to step 6 and recheck.
8. Monitor the OBD STATUS for DTC P0011 in the DTCs MENU with the HDS.

   Does the screen indicate FAILED?

   YES—Go to step 9.

   NO—If the screen indicates PASSED, intermittent failure, the system is OK at this time. If the screen indicates NOT COMPLETED, go to step 5 and recheck.
9. Turn the ignition switch to LOCK (0).
10. Remove the auto-tensioner (see page 4-31).
11. Remove the VTC strainer (A), and check it for clogging.

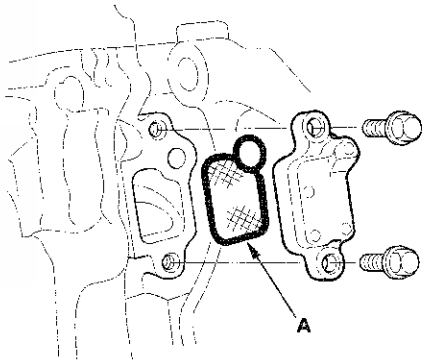

   Is the strainer OK?

   YES—Go to step 12.

   NO—Clean the VTC strainer, replace the engine oil filter and the engine oil, then go to step 14.
12. Test the VTC oil control solenoid valve (see page 11-300).

   Is the VTC oil control solenoid valve OK?

   YES—Go to step 13.

   NO—Replace the VTC oil control solenoid valve (see page 11-300), then go to step 14.

13. Inspect the VTC actuator (see page 6-8).

    Is the VTC actuator OK?

    YES—Check the VTC system oil passages, then go to step 14.

    NO—Replace the VTC actuator (see page 6-30), then go to step 14.

14. Turn the ignition switch to ON (II).

15. Reset the ECM/PCM with the HDS.

16. Clear the CKP pattern with the HDS.

17. Do the ECM/PCM idle learn procedure (see page 11-317).

18. Do the CKP pattern learn procedure (see page 11-5).

19. Do the VTC TEST in the INSPECTION MENU with the HDS.

20. Check for Temporary DTCs or DTCs with the HDS.

    Is DTC P0011 indicated?

    YES—Check for poor connections or loose terminals at the VTC oil control solenoid valve and the ECM/PCM, then go to step 1.

    NO—Go to step 21.

21. Monitor the OBD STATUS for DTC P0011 in the DTCs MENU with the HDS.

    Does the screen indicate PASSED?

    YES—Troubleshooting is complete. If any other Temporary DTCs or DTCs were indicated in step 20, go to the indicated DTC's troubleshooting.■

    NO—If the screen indicates FAILED, check for poor connections or loose terminals at the VTC oil control solenoid valve and the ECM/PCM, then go to step 1. If the screen indicates NOT COMPLETED, go to step 19.

DTC P0340: CMP Sensor A No Signal

NOTE: Before you troubleshoot, record all freeze data and any on-board snapshot, and review the general troubleshooting information (see page 11-3).

1. Turn the ignition switch to ON (II).

2. Clear the DTC with the HDS.

3. Start the engine.

4. Check for Temporary DTCs or DTCs with the HDS.

   Is DTC P0340 indicated?

   YES—Go to step 5.

   NO—Intermittent failure, the system is OK at this time. Check for poor connections or loose terminals at CMP sensor A and the ECM/PCM.■

5. Turn the ignition switch to LOCK (0).

6. Disconnect the CMP sensor A 3P connector.

7. Turn the ignition switch to ON (II).

8. Measure the voltage between CMP sensor A 3P connector terminal No. 3 and body ground.

CMP SENSOR A 3P CONNECTOR

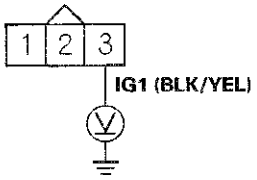

Wire side of female terminals

Is there battery voltage?

YES—Go to step 9.

NO—Repair open in the wire between CMP sensor A and the No. 7 ACG (15 A) fuse, then go to step 18.

(cont'd)

DTC Troubleshooting (cont'd)

9. Measure the voltage between CMP sensor A 3P connector terminal No. 1 and body ground.

CMP SENSOR A 3P CONNECTOR

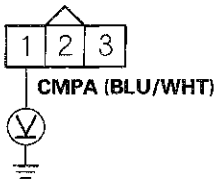

Wire side of female terminals

Is there about 5 V?

YES—Go to step 10.

NO—Go to step 11.

10. Measure the voltage between CMP sensor A 3P connector terminals No. 2 and No. 3.

CMP SENSOR A 3P CONNECTOR

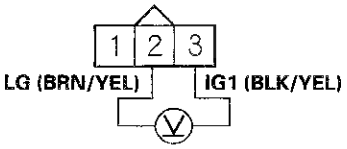

Wire side of female terminals

Is there battery voltage?

YES—Go to step 16.

NO—Repair open in the wire between CMP sensor A and G101 (see page 22-20), then go to step 18.

11. Turn the ignition switch to LOCK (0).

12. Jump the SCS line with the HDS.

13. Disconnect ECM/PCM connector C (49P).

14. Check for continuity between ECM/PCM connector terminal C45 and body ground.

ECM/PCM CONNECTOR C (49P)

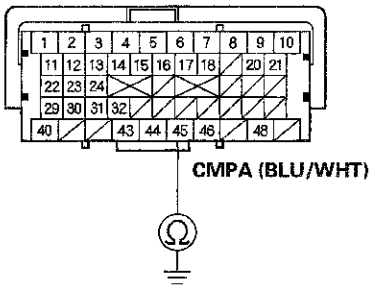

Terminal side of female terminals

Is there continuity?

YES—Repair short in the wire between the ECM/PCM (C45) and CMP sensor A, then go to step 18.

NO—Go to step 15.

15. Check for continuity between CMP sensor A 3P connector terminal No. 1 and ECM/PCM connector terminal C45.

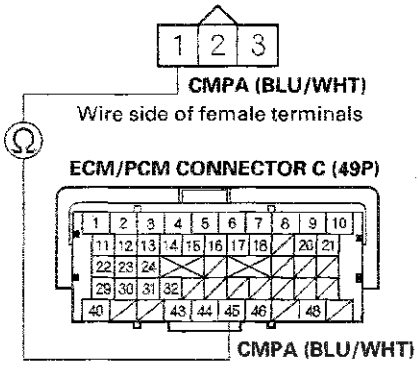

Is there continuity?

YES—Go to step 23.

NO—Repair open in the wire between the ECM/PCM (C45) and CMP sensor A, then go to step 18.

16. Turn the ignition switch to LOCK (0).

17. Replace CMP sensor A (see page 11-301).

18. Reconnect all connectors.

19. Turn the ignition switch to ON (II).

20. Reset the ECM/PCM with the HDS.

21. Do the ECM/PCM idle learn procedure (see page 11-317).

22. Check for Temporary DTCs or DTCs with the HDS.

    Is DTC P0340 indicated?

    YES—Check for poor connections or loose terminals at CMP sensor A and the ECM/PCM, then go to step 1.

    NO—Troubleshooting is complete. If any other Temporary DTCs or DTCs are indicated, go to the indicated DTC's troubleshooting.■

23. Reconnect all connectors.

24. Update the ECM/PCM if it does not have the latest software (see page 11-215), or substitute a known-good ECM/PCM (see page 11-7).

25. Check for Temporary DTCs or DTCs with the HDS.

    Is DTC P0340 indicated?

    YES—Check for poor connections or loose terminals at CMP sensor A and the ECM/PCM. If the ECM/PCM was updated, substitute a known-good ECM/PCM (see page 11-7), then recheck. If the ECM/PCM was substituted, go to step 1.

    NO—If the ECM/PCM was updated, troubleshooting is complete. If the ECM/PCM was substituted, replace the original ECM/PCM (see page 11-216). If any other Temporary DTCs or DTCs are indicated, go to the indicated DTC's troubleshooting.■

DTC Troubleshooting (cont'd)

DTC P0341: CMP Sensor A and CKP Sensor Incorrect Phase Detected

NOTE: Before you troubleshoot, record all freeze data and any on-board snapshot, and review the general troubleshooting information (see page 11-3).

1. Turn the ignition switch to ON (II).
2. Clear the DTC with the HDS.
3. Test-drive at a steady speed between 19—38 mph (30—60 km/h) for 10 minutes.
4. Check for Temporary DTCs or DTCs with the HDS.

   Is DTC P0341 indicated?

   YES—Go to step 9.

   NO—Go to step 5.
5. Do the VTC TEST in the INSPECTION MENU with the HDS.

   Is the result OK?

   YES—Go to step 6.

   NO—Go to step 9.
6. Test-drive at a steady speed between 19—38 mph (30—60 km/h) for 10 minutes.
7. Check the VTC STATUS in the DATA LIST with the HDS.

   Does it indicate ON?

   YES—Go to step 8.

   NO—Go to step 6 and recheck.
8. Monitor the OBD STATUS for DTC P0341 in the DTCs MENU with the HDS.

   Does the screen indicate FAILED?

   YES—Go to step 9.

   NO—If the screen indicates PASSED, intermittent failure, the system is OK at this time. Check for poor connections or loose terminals at the VTC oil control solenoid valve and the ECM/PCM. If the screen indicates NOT COMPLETED, go to step 6 and recheck.
9. Turn the ignition switch to LOCK (0).
10. Test the VTC oil control solenoid valve (see page 11-300).

    Is the VTC oil control solenoid valve OK?

    YES—Go to step 11.

    NO—Replace the VTC oil control solenoid valve (see page 11-300), then go to step 14.
11. Check the camshaft timing (see step 2 on page 6-9).

    Is the camshaft timing OK?

    YES—Go to step 12.

    NO—Reset the camshaft timing (see step 2 on page 6-9), then go to step 14.
12. Check for damage or stretch at the cam chain (see page 6-23).

    Is the cam chain damaged or stretched?

    YES—Replace the cam chain (see page 6-13) and the auto-tensioner (see page 6-20), then go to step 14.

    NO—Go to step 13.
13. Inspect the VTC actuator (see page 6-8).

    Is the actuator OK?

    YES—Go to step 14.

    NO—Replace the VTC actuator (see page 6-30), then go to step 14.

14. Turn the ignition switch to ON (II).

15. Reset the ECM/PCM with the HDS.

16. Clear the CKP pattern with the HDS.

17. Do the ECM/PCM idle learn procedure (see page 11-317).

18. Do the CKP pattern learn procedure (see page 11-5).

19. Test-drive at a steady speed between 19—38 mph (30—60 km/h) for 10 minutes.

20. Check for Temporary DTCs or DTCs with the HDS.

    Is DTC P0341 indicated?

    YES—Check for poor connections or loose terminals at the VTC oil control solenoid valve and the ECM/PCM, then go to step 1.

    NO—Go to step 21.

21. Monitor the OBD STATUS for DTC P0341 in the DTCs MENU with the HDS.

    Does the screen indicate PASSED?

    YES—Troubleshooting is complete. If any other Temporary DTCs or DTCs were indicated in step 20, go to the indicated DTC's troubleshooting. ■

    NO—If the screen indicates FAILED, check for poor connections or loose terminals at the VTC oil control solenoid valve and the ECM/PCM, then go to step 1. If the screen indicates NOT COMPLETED, go to step 19.

DTC P0344: CMP Sensor A Circuit Intermittent Interruption

NOTE: Before you troubleshoot, record all freeze data and any on-board snapshot, and review the general troubleshooting information (see page 11-3).

1. Turn the ignition switch to ON (II).

2. Clear the DTC with the HDS.

3. Start the engine, and let it idle for 10 seconds.

4. Check the CMP A NOISE in the DATA LIST with the HDS.

   Are 0 counts indicated?

   YES—Go to step 7.

   NO—Go to step 5.

5. Test-drive the vehicle for several minutes in the range of these recorded freeze data parameters:

   - ENGINE SPEED
   - VSS

6. Check the CMP A NOISE in the DATA LIST with the HDS.

   Are 0 counts indicated?

   YES—Go to step 7.

   NO—Intermittent failure, the system is OK at this time. Check for poor connections or loose terminals at CMP sensor A and the ECM/PCM. ■

7. Check for poor or loose connections and terminals at these locations:

   - CMP sensor A
   - ECM/PCM
   - Engine ground
   - Body ground

   Are the connections and terminals OK?

   YES—Go to step 8.

   NO—Repair the connections or terminals, then go to step 11.

(cont'd)

DTC Troubleshooting (cont'd)

8. Check for damage on the CMP sensor A pulser plate (see page 6-29).

   Is the pulser plate damaged?

   YES—Replace the CMP sensor A pulser plate (see page 6-29), then go to step 11.

   NO—Go to step 9.

9. Turn the ignition switch to LOCK (0).

10. Replace CMP sensor A (see page 11-301).

11. Turn the ignition switch to ON (II).

12. Reset the ECM/PCM with the HDS.

13. Do the ECM/PCM idle learn procedure (see page 11-317).

14. Start the engine, and let it idle for 10 seconds.

15. Check for Temporary DTCs or DTCs with the HDS.

    Is DTC P0344 indicated?

    YES—Check for poor connections or loose terminals at CMP sensor A and the ECM/PCM, then go to step 1.

    NO—Troubleshooting is complete. If any other Temporary DTCs or DTCs are indicated, go to the indicated DTC's troubleshooting.■

DTC P1009: VTC Advance Malfunction

NOTE:
- Before you troubleshoot, record all freeze data and any on-board snapshot, and review the general troubleshooting information (see page 11-3).
- If DTC P0341 is stored at the same time as DTC P1009, troubleshoot DTC P1009 first, then recheck for DTC P0341.

1. Turn the ignition switch to ON (II).

2. Clear the DTC with the HDS.

3. Start the engine.

4. Check for Temporary DTCs or DTCs with the HDS.

   Is DTC P1009 indicated?

   YES—Go to step 5.

   NO—Intermittent failure, the system is OK at this time.■

5. Turn the ignition switch to LOCK (0).

6. Remove the auto-tensioner (see page 4-31).

7. Remove the VTC strainer (A), and check it for clogging.

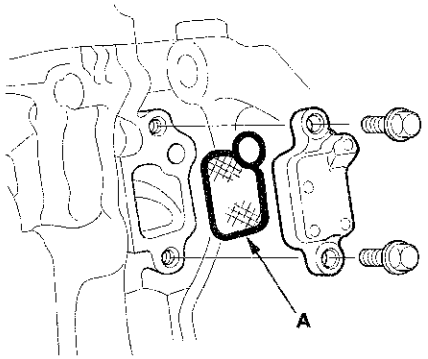

   Is the strainer OK?

   YES—Go to step 8.

   NO—Clean the VTC strainer, replace the engine oil filter and the engine oil, then go to step 10.

8. Test the VTC oil control solenoid valve (see page 11-300).

   Is the valve OK?

   YES—Go to step 9.

   NO—Replace the VTC oil control solenoid valve (see page 11-300), then go to step 10.

9. Inspect the VTC actuator (see page 6-8).

   Is the actuator OK?

   YES—Check the VTC system oil passages, then go to step 10.

   NO—Replace the VTC actuator (see page 6-30), then go to step 10.

10. Turn the ignition switch to ON (II).

11. Reset the ECM/PCM with the HDS.

12. Clear the CKP pattern with the HDS.

13. Do the ECM/PCM idle learn procedure (see page 11-317).

14. Do the CKP pattern learn procedure (see page 11-5).

15. Check for Temporary DTCs or DTCs with the HDS.

    Is DTC P1009 indicated?

    YES—Check the oil passages at the VTC system, then go to step 1.

    NO—Troubleshooting is complete. If any other Temporary DTCs or DTCs are indicated, go to the indicated DTC's troubleshooting.■

DTC P2646: Rocker Arm Oil Pressure Switch Circuit Low Voltage (All models except PZEV)

Special Tools Required
- Pressure gauge adapter 07NAJ-P07010A
- A/T low pressure gauge w/panel 07406-0070301
- A/T pressure hose 07406-0020201
- A/T pressure hose, 2,210 mm 07MAJ-PY4011A
- A/T pressure adapter 07MAJ-PY40120
- Oil pressure hose 07ZAJ-S5AA200

NOTE:
- Before you troubleshoot, record all freeze data and any on-board snapshot, and review the general troubleshooting information (see page 11-3).
- If DTC P2648 and/or P2649 are stored at the same time as DTC P2646, troubleshoot those DTCs first, then recheck for DTC P2646.

1. Check the engine oil level.

   Is the level OK?

   YES—Go to step 2.

   NO—Adjust the engine oil to the proper level, then go to step 20.

2. Turn the ignition switch to ON (II).

3. Clear the DTC with the HDS.

4. Do the VTEC TEST in the INSPECTION MENU with the HDS.

   Is the result OK?

   YES—Intermittent failure, the system is OK at this time. Check for poor connections or loose terminals at the rocker arm oil pressure switch, the rocker arm oil control solenoid, and the ECM/PCM.■

   NO—Go to step 5.

5. Turn the ignition switch to LOCK (0).

6. Disconnect the rocker arm oil pressure switch 2P connector.

7. Turn the ignition switch to ON (II).

(cont'd)

DTC Troubleshooting (cont'd)

8. Check the VTEC PRES SW in the DATA LIST with the HDS.

   Is SWITCH ON indicated?

   YES—Go to step 15.

   NO—Go to step 9.

9. Turn the ignition switch to LOCK (0).

10. Remove the rocker arm oil pressure switch (A), and attach the special tools as shown, then attach the rocker arm oil pressure switch to the oil pressure gauge adapter (B).

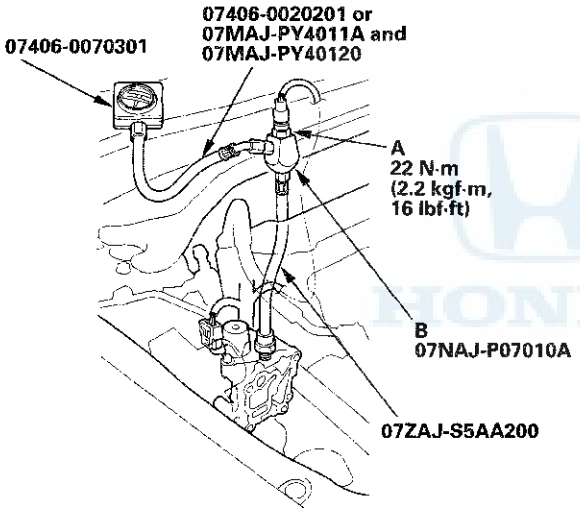

11. Reconnect the rocker arm oil pressure switch 2P connector.

12. Start the engine.

13. Do the VTEC TEST in the INSPECTION MENU with the HDS.

14. Check the oil pressure.

    Does the oil pressure increase to at least 392 kPa (4.0 kgf/cm², 56.9 psi)?

    YES—Replace the rocker arm oil pressure switch (see page 11-304), then go to step 19.

    NO—Inspect the VTEC system. If it is OK, replace the rocker arm oil control valve (see page 11-302), then go to step 19.

15. Turn the ignition switch to LOCK (0).

16. Jump the SCS line with the HDS.

17. Disconnect ECM/PCM connector C (49P).

18. Check for continuity between ECM/PCM connector terminal C22 and body ground.

ECM/PCM CONNECTOR C (49P)

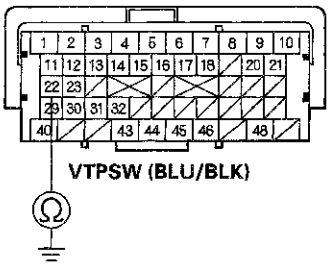

Terminal side of female terminals

Is there continuity?

YES—Repair short in the wire between the ECM/PCM (C22) and the rocker arm oil pressure switch, then go to step 19.

NO—Go to step 25.

19. Reconnect all connectors.

20. Turn the ignition switch to ON (II).

21. Reset the ECM/PCM with the HDS.

22. Do the ECM/PCM idle learn procedure (see page 11-317).

23. Do the VTEC TEST in the INSPECTION MENU with the HDS.

24. Check for Temporary DTCs or DTCs with the HDS.

    Is DTC P2646 indicated?

    YES—Check for poor connections or loose terminals at the rocker arm oil pressure switch, the rocker arm oil control solenoid and the ECM/PCM, then go step 1.

    NO—Troubleshooting is complete. If any other Temporary DTCs or DTCs are indicated, go to the indicated DTC's troubleshooting.■

25. Reconnect all connectors.

26. Update the ECM/PCM if it does not have the latest software (see page 11-215), or substitute a known-good ECM/PCM (see page 11-7).

27. Do the VTEC TEST in the INSPECTION MENU with the HDS.

28. Check for Temporary DTCs or DTCs with the HDS.

    Is DTC P2646 indicated?

    YES—Check for poor connections or loose terminals at the rocker arm oil pressure switch, the rocker arm oil control solenoid and the ECM/PCM. If the ECM/PCM was updated, substitute a known-good ECM/PCM (see page 11-7), then go to step 27. If the ECM/PCM was substituted, go to step 1.

    NO—If the ECM/PCM was updated, troubleshooting is complete. If the ECM/PCM was substituted, replace the original ECM/PCM (see page 11-216). If any other Temporary DTCs or DTCs are indicated, go to the indicated DTC's troubleshooting.■

DTC P2646: Rocker Arm Oil Pressure Switch A Circuit Low Voltage (PZEV model)

DTC P2647: Rocker Arm Oil Pressure Switch A Circuit High Voltage (PZEV model)

Special Tools Required
- Pressure gauge adapter 07NAJ-P07010A
- A/T low pressure gauge w/panel 07406-0070301
- A/T pressure hose 07406-0020201
- A/T pressure hose, 2,210 mm 07MAJ-PY4011A
- A/T pressure adapter 07MAJ-PY40120
- Oil pressure hose 07ZAJ-S5AA200

NOTE:
- Before you troubleshoot, record all freeze data and any on-board snapshot, and review the general troubleshooting information (see page 11-3).
- If DTC P2648 and/or P2649 are stored at the same time as DTC P2646 and/or P2647, troubleshoot those DTCs first, then recheck for DTC P2646 and/or P2647.

1. Check the engine oil level.

   Is the level OK?

   YES—Go to step 2.

   NO—Adjust the engine oil level to the proper level, then go to step 29.

2. Turn the ignition switch to ON (II).

3. Clear the DTC with the HDS.

(cont'd)

DTC Troubleshooting (cont'd)

4. Select the VTEC TEST in the INSPECTION MENU with the HDS, and do the VTEC TEST.

   Are VTECIN-0 and VTECEX-0 indicated?

   YES—Intermittent failure, the system is OK at this time. Check for poor connections or loose terminals at rocker arm oil pressure switch A, rocker arm oil control solenoid A, and the PCM. ■

   NO—If the result is

   - VTECIN-1: Go to step 5.
   - VTECIN-3: Go to step 14.
   - VTECIN-3 and VTECEX-3 indicated at the same time: Check the oil passage between the engine oil pressure switch and the rocker arm oil control valve filter. If it is OK, go to step 14.
   - VTECIN-2, VTECIN-4: Inspect the intake valve side of the VTEC system. If it is OK, replace the rocker arm oil control valve (see page 11-303), then go to step 29.
   - VTECEX-1, 2, 3, 4: The exhaust valve side VTEC system is faulty. Go to the troubleshooting for P2651/P2652 (see page 11-290).

5. Turn the ignition switch to LOCK (0).

6. Disconnect the rocker arm oil pressure switch A 2P connector.

7. At the rocker arm oil pressure switch A side of the connector, check for continuity between the 2P connector terminals.

ROCKER ARM OIL PRESSURE SWITCH A 2P CONNECTOR

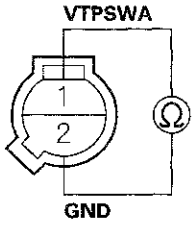

Terminal side of male terminals

Is there continuity?

YES—Go to step 8.

NO—Replace rocker arm oil pressure switch A (see page 11-305), then go to step 29.

8. Turn the ignition switch to ON (II).

9. Measure the voltage between rocker arm oil pressure switch A 2P connector terminal No. 1 and body ground.

ROCKER ARM OIL PRESSURE SWITCH A 2P CONNECTOR

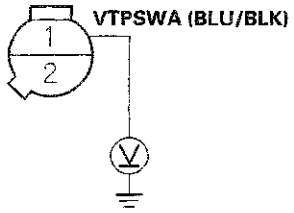

Wire side of female terminals

Is there battery voltage?

YES—Repair open in the wire between rocker arm oil pressure switch A and G101 (see page 22-20), then go to step 28.

NO—Go to step 10.

10. Turn the ignition switch to LOCK (0).

11. Jump the SCS line with the HDS.

12. Disconnect PCM connector C (49P).

13. Check for continuity between rocker arm oil pressure switch A 2P connector terminal No. 1 and PCM connector terminal C22.

ROCKER ARM OIL PRESSURE SWITCH A 2P CONNECTOR

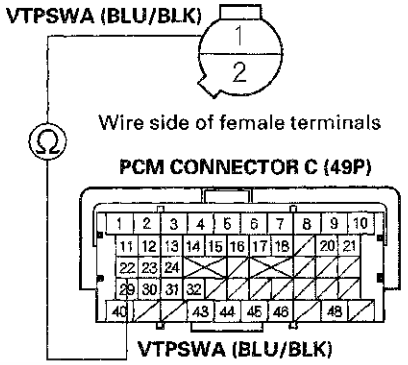

Terminal side of female terminals

Is there continuity?

YES—Check for poor connections or loose terminals at rocker arm oil pressure switch A, rocker arm oil control solenoid A, and the PCM. If the connections and terminals are OK, go to step 35.

NO—Repair open in the wire between rocker arm oil pressure switch A and the PCM (C22), then go to step 29.

14. Turn the ignition switch to LOCK (0).

15. Disconnect the rocker arm oil pressure switch A 2P connector.

(cont'd)

DTC Troubleshooting (cont'd)

16. Turn the ignition switch to ON (II).

17. Check ROCKER ARM OIL PRESSURE SWITCH A in the DATA LIST with the HDS.

    Is SWITCH ON indicated?

    YES—Go to step 24.

    NO—Go to step 18.

18. Turn the ignition switch to LOCK (0).

19. Remove rocker arm oil pressure switch A (see page 11-305), then reinstall the rocker arm oil control valve and its filter (see page 11-303) without installing rocker arm oil pressure switch A.

20. Attach the special tools to the rocker arm oil control valve as shown, then attach rocker arm oil pressure switch A to the oil pressure gauge adapter (B).

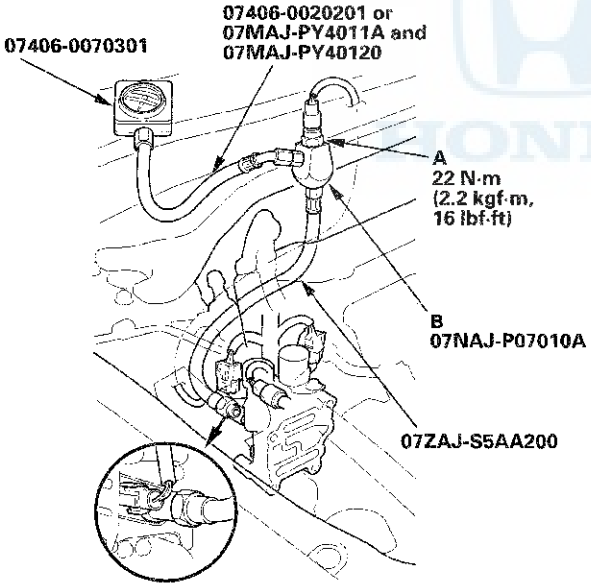

21. Reconnect the rocker arm oil pressure switch A 2P connector.

22. Select the VTEC TEST in the INSPECTION MENU with the HDS, and do the VTEC TEST.

23. Check the oil pressure during the High V/T/LIFT (TEST STATUS 4).

    Does the oil pressure increase to at least 191 kPa (2.0 kgf/cm², 27.7 psi)?

    YES—Replace rocker arm oil pressure switch A (see page 11-305), then go to step 29.

    NO—Inspect the intake valve side of the VTEC system. If it is OK, replace the rocker arm oil control valve (see page 11-303), then go to step 29.

24. Turn the ignition switch to LOCK (0).

25. Jump the SCS line with the HDS.

26. Disconnect PCM connector C (49P).

27. Check for continuity between PCM connector terminal C22 and body ground.

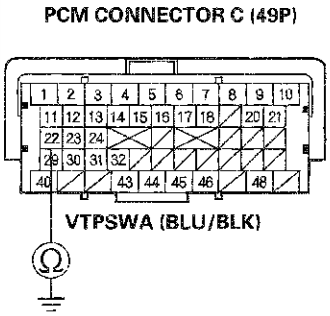

Terminal side of female terminals

Is there continuity?

YES—Repair short in the wire between the PCM (C22) and rocker arm oil pressure switch A, then go to step 29.

NO—Check for poor connections or loose terminals at rocker arm oil pressure switch A, rocker arm oil control solenoid A, and the PCM. If the connectors and the terminals are OK, go to step 35.

28. Turn the ignition switch to LOCK (0).

29. Reconnect all connectors.

30. Turn the ignition switch to ON (II).

31. Reset the PCM with the HDS.

32. Do the PCM idle learn procedure (see page 11-317).

33. Select the VTEC TEST in the INSPECTION MENU with the HDS, and do the VTEC TEST.

    Are VTECIN-0 and VTECEX-0 indicated?

    YES—Go to step 34.

    NO—Check for poor connections or loose terminals at rocker arm oil pressure switch A, rocker arm oil control solenoid A, and the PCM, then go to step 1.

34. Check for Temporary DTCs or DTCs with the HDS.

    Are any Temporary DTCs or DTCs indicated?

    YES—If any other Temporary DTCs or DTCs are indicated, go to the indicated DTC's troubleshooting.■

    NO—Troubleshooting is complete.■

35. Reconnect all connectors.

36. Update the PCM if it does not have the latest software (see page 11-215), or substitute a known-good PCM (see page 11-7).

37. Select the VTEC TEST in the INSPECTION MENU with the HDS, and do the VTEC TEST.

    Are VTECIN-0 and VTECEX-0 indicated?

    YES—Go to step 38.

    NO—If the PCM was updated, substitute a known-good PCM (see page 11-7), then recheck. If the PCM was substituted, go to step 1.

38. Check for Temporary DTCs or DTCs with the HDS.

    Are any Temporary DTCs or DTCs indicated?

    YES—If any other Temporary DTCs or DTCs are indicated, go to the indicated DTC's troubleshooting.■

    NO—If the PCM was updated, troubleshooting is complete. If the PCM was substituted, replace the original PCM (see page 11-216).■

DTC Troubleshooting (cont'd)

DTC P2647: Rocker Arm Oil Pressure Switch Circuit High Voltage (All models except PZEV)

NOTE:
- Before you troubleshoot, record all freeze data and any on-board snapshot, and review the general troubleshooting information (see page 11-3).
- If DTC P2648 and/or P2649 are stored at the same time as DTC P2647, troubleshoot those DTCs first, then recheck for DTC P2647.

1. Check the engine oil level.

   Is the level OK?

   YES—Go to step 2.

   NO—Adjust the engine oil to the proper level, then go to step 17.

2. Turn the ignition switch to ON (II).

3. Clear the DTC with the HDS.

4. Do the VTEC TEST in the INSPECTION MENU with the HDS.

   NOTE: If DTC stored during VTEC TEST, check for DTCs MENU. If DTC P2647 indicated, go to step 6. If any other Temporary DTCs or DTCs are indicated, go to the indicated DTC's troubleshooting.

   Is the result OK?

   YES—Intermittent failure, the system is OK at this time. Check for poor connections or loose terminals at the rocker arm oil pressure switch, the rocker arm oil control solenoid, and the ECM/PCM. ■

   NO—Go to step 5.

5. Check the result of step 4.

   - VTEC Switch Failure
   - VTEC Switch Open
   - VTEC Switch SIG Line Open
   - VTEC Switch GND Line Open

   Is the test result any of those above?

   YES—Go to step 6.

   NO—Check for poor connections or loose terminals at the rocker arm oil pressure switch. If it is OK, replace the rocker arm oil control valve (see page 11-302), then, go to step 15.

6. Turn the ignition switch to LOCK (0).

7. Disconnect the rocker arm oil pressure switch 2P connector.

8. At the rocker arm oil pressure switch side, check for continuity between its 2P connector terminals.

ROCKER ARM OIL PRESSURE SWITCH 2P CONNECTOR

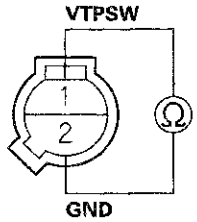

Terminal side of male terminals

Is there continuity?

YES—Go to step 9.

NO—Replace the rocker arm oil pressure switch (see page 11-304), then go to step 16.

9. Turn the ignition switch to ON (II).

10. Measure the voltage between rocker arm oil pressure switch 2P connector terminal No. 1 and body ground.

ROCKER ARM OIL PRESSURE SWITCH 2P CONNECTOR

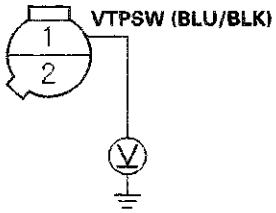

Wire side of female terminals

Is there battery voltage?

YES—Repair open in the wire between the rocker arm oil pressure switch and G101 (see page 22-20), then go to step 15.

NO—Go to step 11.

11. Turn the ignition switch to LOCK (0).

12. Jump the SCS line with the HDS.

13. Disconnect ECM/PCM connector C (49P).

14. Check for continuity between rocker arm oil pressure switch 2P connector terminal No. 1 and ECM/PCM connector terminal C22.

ROCKER ARM OIL PRESSURE SWITCH 2P CONNECTOR

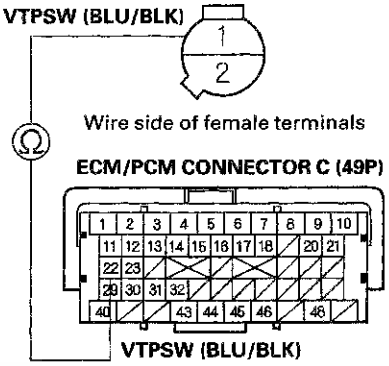

Terminal side of female terminals

Is there continuity?

YES—Go to step 22.

NO—Repair open in the wire between the ECM/PCM (C22) and the rocker arm oil pressure switch, then go to step 22.

15. Turn the ignition switch to LOCK (0).

16. Reconnect all connectors.

17. Turn the ignition switch to ON (II).

18. Reset the ECM/PCM with the HDS.

19. Do the ECM/PCM idle learn procedure (see page 11-317).

(cont'd)

DTC Troubleshooting (cont'd)

20. Check for Temporary DTCs or DTCs with the HDS.

    Is DTC P2647 indicated?

    YES—Check for poor connections or loose terminals at the rocker arm oil pressure switch, the rocker arm oil control solenoid, and the ECM/PCM, then go to step 1.

    NO—Go to step 21.

21. Monitor the OBD STATUS for DTC P2647 in the DTCs MENU with the HDS.

    Does the screen indicate PASSED?

    YES—Troubleshooting is complete. If any other Temporary DTCs or DTCs were indicated in step 20, go to the indicated DTC's troubleshooting. ■

    NO—If the screen indicates FAILED, go to step 1 and recheck. If the screen indicates NOT COMPLETED, keep idling until a result comes on.

22. Reconnect all connectors.

23. Update the ECM/PCM if it does not have the latest software (see page 11-215), or substitute a known-good ECM/PCM (see page 11-7).

24. Start the engine, and let it idle.

25. Check for Temporary DTCs or DTCs with the HDS.

    Is DTC P2647 indicated?

    YES—Check for poor connections or loose terminals at the rocker arm oil pressure switch, the rocker arm oil control solenoid, and the ECM/PCM. If the ECM/PCM was updated, substitute a known-good ECM/PCM (see page 11-7), then go to step 24. If the ECM/PCM was substituted, go to step 1.

    NO—Go to step 26.

26. Monitor the OBD STATUS for DTC P2647 in the DTCs MENU with the HDS.

    Does the screen indicate PASSED?

    YES—If the ECM/PCM was updated, troubleshooting is complete. If the ECM/PCM was substituted, replace the original ECM/PCM (see page 11-216). If any other Temporary DTCs or DTCs were indicated in step 25, go to the indicated DTC's troubleshooting. ■

    NO—If the screen indicates FAILED, check for poor connections or loose terminals at the rocker arm oil pressure switch and the ECM/PCM. If the ECM/PCM was updated, substitute a known-good ECM/PCM (see page 11-7), then go to step 24. If the ECM/PCM was substituted, go to step 1. If the screen indicates NOT COMPLETED, keep idling until a result comes on.

DTC P2648: Rocker Arm Oil Control Solenoid Circuit Low Voltage (All models except PZEV)

NOTE: Before you troubleshoot, record all freeze data and any on-board snapshot, and review the general troubleshooting information (see page 11-3).

1. Turn the ignition switch to ON (II).
2. Clear the DTC with the HDS.
3. Do the VTEC TEST in the INSPECTION MENU with the HDS.

   Is the result OK?

   YES—Intermittent failure, the system is OK at this time. Check for poor connections or loose terminals at the rocker arm oil control solenoid and the ECM/PCM. ■

   NO—Go to step 4.
4. Turn the ignition switch to LOCK (0).
5. Disconnect the rocker arm oil control solenoid 2P connector.
6. Measure the resistance between rocker arm oil control solenoid 2P connector terminals No. 1 and No. 2.

ROCKER ARM OIL CONTROL SOLENOID 2P CONNECTOR

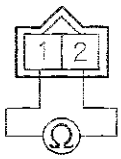

Terminal side of male terminals

Is there 14—30 Ω at room temperature?

YES—Go to step 7.

NO—Go to step 10.

7. Jump the SCS line with the HDS.
8. Disconnect ECM/PCM connector B (49P).
9. Check for continuity between ECM/PCM connector terminal B35 and body ground.

ECM/PCM CONNECTOR B (49P)

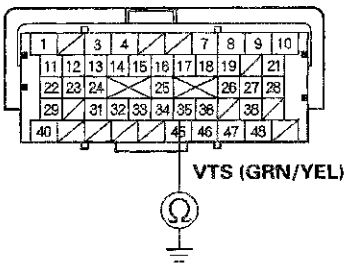

Terminal side of female terminals

Is there continuity?

YES—Repair short in the wire between the ECM/PCM (B35) and the rocker arm oil control solenoid, then go to step 11.

NO—Go to step 18.

10. Replace the rocker arm oil control valve (see page 11-302).
11. Reconnect all connectors.
12. Turn the ignition switch to ON (II).
13. Reset the ECM/PCM with the HDS.
14. Do the ECM/PCM idle learn procedure (see page 11-317).
15. Do the VTEC TEST in the INSPECTION MENU with the HDS.

(cont'd)

DTC Troubleshooting (cont'd)

16. Check for Temporary DTCs or DTCs with the HDS.

    Is DTC P2648 indicated?

    YES—Check for poor connections or loose terminals at the rocker arm oil control solenoid and the ECM/PCM, then go to step 1.

    NO—Go to step 17.

17. Monitor the OBD STATUS for DTC P2648 in the DTCs MENU with the HDS.

    Does the screen indicate PASSED?

    YES—Troubleshooting is complete. If any other Temporary DTCs or DTCs were indicated in step 16, go to the indicated DTC's troubleshooting. ■

    NO—If the screen indicates FAILED, check for poor connections or loose terminals at the rocker arm oil control solenoid and the ECM/PCM, then go to step 1. If the screen indicates NOT COMPLETED, go to step 15.

18. Reconnect all connectors.

19. Update the ECM/PCM if it does not have the latest software (see page 11-215), or substitute a known-good ECM/PCM (see page 11-7).

20. Do the VTEC TEST in the INSPECTION MENU with the HDS.

21. Check for Temporary DTCs or DTCs with the HDS.

    Is DTC P2648 indicated?

    YES—Check for poor connections or loose terminals at the rocker arm oil control solenoid and the ECM/PCM. If the ECM/PCM was updated, substitute a known-good ECM/PCM (see page 11-7), then go to step 20. If the ECM/PCM was substituted, go to step 1.

    NO—Go to step 22.

22. Monitor the OBD STATUS for DTC P2648 in the DTCs MENU with the HDS.

    Does the screen indicate PASSED?

    YES—If the ECM/PCM was updated, troubleshooting is complete. If the ECM/PCM was substituted, replace the original ECM/PCM (see page 11-216). If any other Temporary DTCs or DTCs were indicated in step 21, go to the indicated DTC's troubleshooting. ■

    NO—If the screen indicates FAILED, check for poor connections or loose terminals at the rocker arm oil control solenoid and the ECM/PCM. If the ECM/PCM was updated, substitute a known-good ECM/PCM (see page 11-7), then go to step 20. If the ECM/PCM was substituted, go to step 1. If the screen indicates NOT COMPLETED, go to step 20.

DTC P2648: Rocker Arm Oil Control Solenoid A (Intake Valve Side) Circuit Low Voltage (PZEV model)

NOTE: Before you troubleshoot, record all freeze data and any on-board snapshot, and review the general troubleshooting information (see page 11-3).

1. Turn the ignition switch to ON (II).
2. Clear the DTC with the HDS.
3. Select the VTEC TEST in the INSPECTION MENU with the HDS, and do the Solenoid Valve ACTIVATION of the ROCKER ARM SOLENOID A.
4. Check for Temporary DTCs or DTCs with the HDS.

   Is DTC P2648 indicated?

   YES—Go to step 5.

   NO—Intermittent failure, the system is OK at this time. Check for poor connections or loose terminals at rocker arm oil control solenoid A and the PCM. ■
5. Turn the ignition switch to LOCK (0).
6. Disconnect the rocker arm oil control solenoid A 2P connector.
7. Measure the resistance between rocker arm oil control solenoid A 2P connector terminals No. 1 and No. 2.

ROCKER ARM OIL CONTROL SOLENOID A 2P CONNECTOR

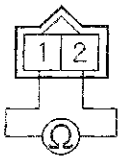

Terminal side of male terminals

Is there 14—30 Ω at room temperature?

YES—Go to step 8.

NO—Go to step 11.

8. Jump the SCS line with the HDS.
9. Disconnect PCM connector B (49P).
10. Check for continuity between PCM connector terminal B35 and body ground.

PCM CONNECTOR B (49P)

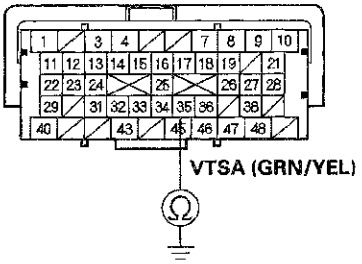

Terminal side of female terminals

Is there continuity?

YES—Repair short in the wire between the PCM (B35) and rocker arm oil control solenoid A, then go to step 12.

NO—Check for poor connections or loose terminals at the PCM and rocker arm oil control solenoid A, then go to step 19.

(cont'd)

DTC Troubleshooting (cont'd)

11. Replace the rocker arm oil control valve (see page 11-303).

12. Reconnect all connectors.

13. Turn the ignition switch to ON (II).

14. Reset the PCM with the HDS.

15. Do the PCM idle learn procedure (see page 11-317).

16. Select the VTEC TEST in the INSPECTION MENU with the HDS, and do the Solenoid Valve ACTIVATION of the ROCKER ARM SOLENOID A.

17. Check for Temporary DTCs or DTCs with the HDS.

    Is DTC P2648 indicated?

    YES—Check for poor connections or loose terminals at rocker arm oil control solenoid A and the PCM, then go to step 1.

    NO—Go to step 18.

18. Monitor the OBD STATUS for DTC P2648 in the DTCs MENU with the HDS.

    Does the screen indicate PASSED?

    YES—Troubleshooting is complete. If any other Temporary DTCs or DTCs were indicated in step 17, go to the indicated DTC's troubleshooting.■

    NO—If the screen indicates FAILED, go to step 1 and recheck. If the screen indicates NOT COMPLETED, go to step 16.

19. Reconnect all connectors.

20. Update the PCM if it does not have the latest software (see page 11-215), or substitute a known-good PCM (see page 11-7).

21. Select the VTEC TEST in the INSPECTION MENU with the HDS, and do the Solenoid Valve ACTIVATION of the ROCKER ARM SOLENOID A.

22. Check for Temporary DTCs or DTCs with the HDS.

    Is DTC P2648 indicated?

    YES—Check for poor connections or loose terminals at rocker arm oil control solenoid A and the PCM. If the PCM was updated, substitute a known-good PCM (see page 11-7), then go to step 21. If the PCM was substituted, go to step 1.

    NO—Go to step 23.

23. Monitor the OBD STATUS for DTC P2648 in the DTCs MENU with the HDS.

    Does the screen indicate PASSED?

    YES—If the PCM was updated, troubleshooting is complete. If the PCM was substituted, replace the original PCM (see page 11-216). If any other Temporary DTCs or DTCs were indicated in step 22, go to the indicated DTC's troubleshooting.■

    NO—If the screen indicates FAILED, check for poor connections or loose terminals at rocker arm oil control solenoid A and the PCM. If the PCM was updated, substitute a known-good PCM (see page 11-7), then go to step 21. If the PCM was substituted, go to step 1. If the screen indicates NOT COMPLETED, go to step 21.

DTC P2649: Rocker Arm Oil Control Solenoid Circuit High Voltage (All models except PZEV)

NOTE: Before you troubleshoot, record all freeze data and any on-board snapshot, and review the general troubleshooting information (see page 11-3).

1. Turn the ignition switch to ON (II).
2. Clear the DTC with the HDS.
3. Start the engine. Hold the engine speed at 3,000 rpm without load (A/T in P or N, M/T in neutral) until the radiator fan comes on, then let it idle.
4. Check for Temporary DTCs or DTCs with the HDS.

   Is DTC P2649 indicated?

   YES—Go to step 5.

   NO—Intermittent failure, the system is OK at this time. Check for poor connections or loose terminals at the rocker arm oil control solenoid and the ECM/PCM. ■
5. Turn the ignition switch to LOCK (0).
6. Disconnect the rocker arm oil control solenoid 2P connector.
7. Measure the resistance between rocker arm oil control solenoid 2P connector terminals No. 1 and No. 2.

ROCKER ARM OIL CONTROL SOLENOID 2P CONNECTOR

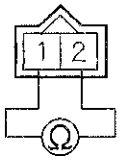

Terminal side of male terminals

Is there 14—30 Ω at room temperature?

YES—Go to step 8.

NO—Go to step 12.

8. Check for continuity between rocker arm oil control solenoid 2P connector terminal No. 1 and body ground.

ROCKER ARM OIL CONTROL SOLENOID 2P CONNECTOR

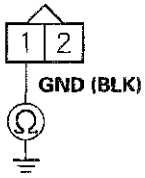

Wire side of female terminals

Is there continuity?

YES—Go to step 9.

NO—Repair open in the wire between the rocker arm oil control solenoid and G101 (see page 22-20), then go to step 13.

9. Jump the SCS line with the HDS.
10. Disconnect ECM/PCM connector B (49P).

(cont'd)

DTC Troubleshooting (cont'd)

11. Check for continuity between ECM/PCM connector terminal B35 and rocker arm oil control solenoid 2P connector terminal No. 2.

ROCKER ARM OIL CONTROL SOLENOID 2P CONNECTOR

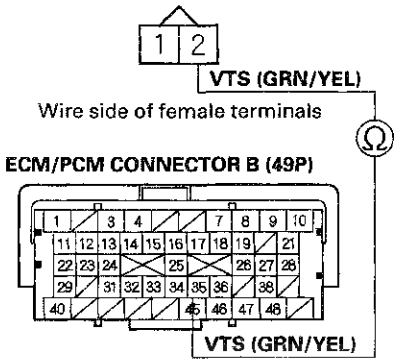

Is there continuity?

YES—Go to step 19.

NO—Repair open in the wire between the ECM/PCM (B35) and the rocker arm oil control solenoid, then go to step 13.

12. Replace the rocker arm oil control valve (see page 11-302).

13. Reconnect all connectors.

14. Turn the ignition switch to ON (II).

15. Reset the ECM/PCM with the HDS.

16. Do the ECM/PCM idle learn procedure (see page 11-317).

17. Check for Temporary DTCs or DTCs with the HDS.

Is DTC P2649 indicated?

YES—Check for poor connections or loose terminals at the rocker arm oil control solenoid and the ECM/PCM, then go to step 1.

NO—Go to step 18.

18. Monitor the OBD STATUS for DTC P2649 in the DTCs MENU with the HDS.

Does the screen indicate PASSED?

YES—Troubleshooting is complete. If any other Temporary DTCs or DTCs were indicated in step 17, go to the indicated DTC's troubleshooting. ■

NO—If the screen indicates FAILED, check for poor connections or loose terminals at the rocker arm oil control solenoid and the ECM/PCM, then go to step 1. If the screen indicates NOT COMPLETED, keep idling until a result comes on.

19. Reconnect all connectors.

20. Update the ECM/PCM if it does not have the latest software (see page 11-215), or substitute a known-good ECM/PCM (see page 11-7).

21. Start the engine, and let it idle.

22. Check for Temporary DTCs or DTCs with the HDS.

    Is DTC P2649 indicated?

    YES—Check for poor connections or loose terminals at the rocker arm oil control solenoid and the ECM/PCM. If the ECM/PCM was updated, substitute a known-good ECM/PCM (see page 11-7), then recheck. If the ECM/PCM was substituted, go to step 1.

    NO—Go to step 23.

23. Monitor the OBD STATUS for DTC P2649 in the DTCs MENU with the HDS.

    Does the screen indicate PASSED?

    YES—If the ECM/PCM was updated troubleshooting is complete. If the ECM/PCM was substituted, replace the original ECM/PCM (see page 11-216). If any other Temporary DTCs or DTCs were indicated in step 22, go to the indicated DTC's troubleshooting. ■

    NO—If the screen indicates FAILED, check for poor connections or loose terminals at the rocker arm oil control solenoid and the ECM/PCM. If the ECM/PCM was updated, substitute a known-good ECM/PCM (see page 11-7), then recheck. If the ECM/PCM was substituted, go to step 1. If the screen indicates NOT COMPLETED, keep idling until a result comes on.

DTC P2649: Rocker Arm Oil Control Solenoid A (Intake Valve Side) Circuit High Voltage (PZEV model)

NOTE: Before you troubleshoot, record all freeze data and any on-board snapshot, and review the general troubleshooting information (see page 11-3).

1. Turn the ignition switch to ON (II).

2. Clear the DTC with the HDS.

3. Start the engine. Hold the engine speed at 3,000 rpm without load (in P or N) until the radiator fan comes on, then let it idle.

4. Check for Temporary DTCs or DTCs with the HDS.

   Is DTC P2649 indicated?

   YES—Go to step 5.

   NO—Intermittent failure, the system is OK at this time. Check for poor connections or loose terminals at rocker arm oil control solenoid A and the PCM. ■

5. Turn the ignition switch to LOCK (0).

6. Disconnect the rocker arm oil control solenoid A 2P connector.

7. Measure the resistance between rocker arm oil control solenoid A 2P connector terminals No. 1 and No. 2.

ROCKER ARM OIL CONTROL SOLENOID A 2P CONNECTOR

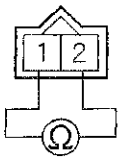

Terminal side of male terminals

Is there 14–30 Ω at room temperature?

YES—Go to step 8.

NO—Go to step 12.

(cont'd)

DTC Troubleshooting (cont'd)

8. Check for continuity between rocker arm oil control solenoid A 2P connector terminal No. 1 and body ground.

ROCKER ARM OIL CONTROL SOLENOID A 2P CONNECTOR

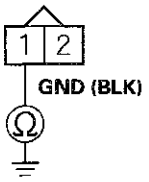

Wire side of female terminals

Is there continuity?

YES—Go to step 9.

NO—Repair open in the wire between the rocker arm oil control solenoid A and G101, then go to step 13.

9. Jump the SCS line with the HDS.

10. Disconnect PCM connector B (49P).

11. Check for continuity between PCM connector terminal B35 and rocker arm oil control solenoid A 2P connector terminal No. 2.

ROCKER ARM OIL CONTROL SOLENOID A 2P CONNECTOR

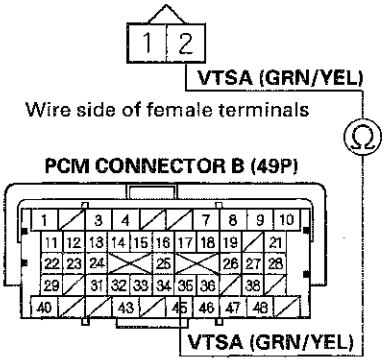

Terminal side of female terminals

Is there continuity?

YES—Go to step 19.

NO—Repair open in the wire between the PCM (B35) and the rocker arm oil control solenoid A, then go to step 13.

12. Replace the rocker arm oil control valve (see page 11-303).

13. Reconnect all connectors.

14. Turn the ignition switch to ON (II).

15. Reset the PCM with the HDS.

16. Do the PCM idle learn procedure (see page 11-317).

17. Check for Temporary DTCs or DTCs with the HDS.

    Is DTC P2649 indicated?

    YES—Check for poor connections or loose terminals at rocker arm oil control solenoid A and the PCM, then go to step 1.

    NO—Go to step 18.

18. Monitor the OBD STATUS for DTC P2649 in the DTCs MENU with the HDS.

    Does the screen indicate PASSED?

    YES—Troubleshooting is complete. If any other Temporary DTCs or DTCs were indicated in step 17, go to the indicated DTC's troubleshooting.■

    NO—If the screen indicates FAILED, go to step 1 and recheck. If the screen indicates NOT COMPLETED, keep idling until a result comes on.

19. Reconnect all connectors.

20. Update the PCM if it does not have the latest software (see page 11-215), or substitute a known-good PCM (see page 11-7).

21. Start the engine, and let it idle.

22. Check for Temporary DTCs or DTCs with the HDS.

    Is DTC P2649 indicated?

    YES—Check for poor connections or loose terminals at rocker arm oil control solenoid A and the PCM. If the PCM was updated, substitute a known-good PCM (see page 11-7), then recheck. If the PCM was substituted, go to step 1.

    NO—Go to step 23.

23. Monitor the OBD STATUS for DTC P2649 in the DTCs MENU with the HDS.

    Does the screen indicate PASSED?

    YES—If the PCM was updated, troubleshooting is complete. If the PCM was substituted, replace the original PCM (see page 11-216). If any other Temporary DTCs or DTCs were indicated in step 22, go to the indicated DTC's troubleshooting.■

    NO—If the screen indicates FAILED, check for poor connections or loose terminals at rocker arm oil control solenoid A and the PCM. If the PCM was updated, substitute a known-good PCM, then recheck. If the PCM was substituted, go to step 1. If the screen indicates NOT COMPLETED, keep idling until a result comes on.

DTC Troubleshooting (cont'd)

DTC P2651: Rocker Arm Oil Pressure Switch B Circuit Low Voltage (PZEV model)

DTC P2652: Rocker Arm Oil Pressure Switch B Circuit High Voltage (PZEV model)

Special Tools Required
- Pressure gauge adapter 07NAJ-P07010A
- A/T low pressure gauge w/panel 07406-0070301
- A/T pressure hose 07406-0020201
- A/T pressure hose, 2,210 mm 07MAJ-PY4011A
- A/T pressure adapter 07MAJ-PY40120
- Oil pressure hose 07ZAJ-S5AA200

NOTE:
- Before you troubleshoot, record all freeze data and any on-board snapshot, and review the general troubleshooting information (see page 11-3).
- If DTC P2653 and/or P2654 are stored at the same time as DTC P2651 and/or P2652, troubleshoot those DTCs first, then recheck for DTC P2651 and/or P2652.

1. Check the engine oil level.

   Is the level OK?

   YES—Go to step 2.

   NO—Adjust the engine oil level to the proper level, then go to step 29.

2. Turn the ignition switch to ON (II).

3. Clear the DTC with the HDS.

4. Select the VTEC TEST in the INSPECTION MENU with the HDS, and do the VTEC TEST.

   Are VTECEX-0 and VTECIN-0 indicated?

   YES—Intermittent failure, the system is OK at this time. Check for poor connections or loose terminals at rocker arm oil pressure switch B, and rocker arm oil control solenoid B, and the PCM.■

   NO—If the result is

   - VTECEX-1: Go to step 5.
   - VTECEX-3: Go to step 14.
   - VTECEX-3 and VTECIN-3 indicated at the same time: Check the oil passage between the engine oil pressure switch and the rocker arm oil control valve filter. If it is OK, go to step 14.
   - VTECEX-2, VTECEX-4: Inspect the exhaust side of the VTEC system. If it is OK, replace the rocker arm oil control valve (see page 11-303), then go to step 29.
   - VTECIN-1, 2, 3, 4: The intake valve side VTEC system is faulty. Go to the troubleshooting for P2646/P2647 (see page 11-273).

5. Turn the ignition switch to LOCK (0).

6. Disconnect the rocker arm oil pressure switch B 2P connector.

7. At the rocker arm oil pressure switch B side, check for continuity between its 2P connector terminals.

ROCKER ARM OIL PRESSURE SWITCH B 2P CONNECTOR

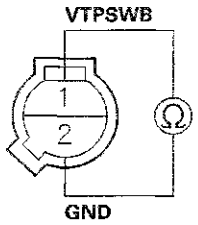

Terminal side of male terminals

Is there continuity?

YES—Go to step 8.

NO—Replace rocker arm oil pressure switch B (see page 11-305), then go to step 29.

8. Turn the ignition switch to ON (II).

9. Measure the voltage between rocker arm oil pressure switch B 2P connector terminal No. 1 and body ground.

ROCKER ARM OIL PRESSURE SWITCH B 2P CONNECTOR

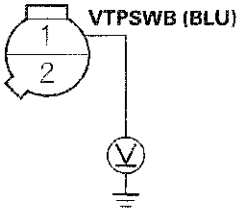

Wire side of female terminals

Is there battery voltage?

YES—Repair open in the wire between rocker arm oil pressure switch B and G101 (see page 22-20), then go to step 28.

NO—Go to step 10.

10. Turn the ignition switch to LOCK (0).

11. Jump the SCS line with the HDS.

12. Disconnect PCM connector B (49P).

(cont'd)

DTC Troubleshooting (cont'd)

13. Check for continuity between rocker arm oil pressure switch B 2P connector terminal No. 1 and PCM connector terminal B43.

ROCKER ARM OIL PRESSURE SWITCH B 2P CONNECTOR

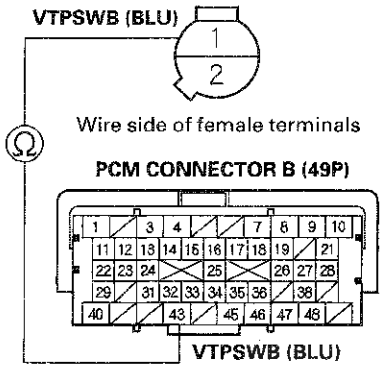

Is there continuity?

YES—Check for poor connections or loose terminals at rocker arm oil pressure switch B, rocker arm oil control solenoid B, and the PCM. If the connections and terminals are OK, go to step 35.

NO—Repair open in the wire between rocker arm oil pressure switch B and the PCM (B43), then go to step 29.

14. Turn the ignition switch to LOCK (0).

15. Disconnect the rocker arm oil pressure switch B 2P connector.

16. Turn the ignition switch to ON (II).

17. Check the ROCKER ARM OIL PRESSURE SWITCH B in the DATA LIST with the HDS.

Is SWITCH ON indicated?

YES—Go to step 24.

NO—Go to step 18.

18. Turn the ignition switch to LOCK (0).

19. Remove rocker arm oil pressure switch B (see page 11-305), then reinstall the rocker arm oil control valve and its filter (see page 11-303) without installing rocker arm oil pressure switch B.

20. Attach the special tools to the rocker arm oil control valve as shown, then attach rocker arm oil pressure switch B to the oil pressure gauge adapter (A).

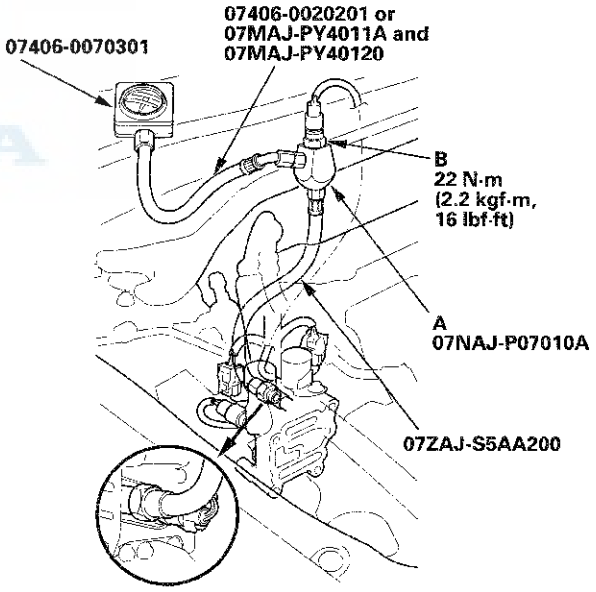

21. Reconnect the rocker arm oil pressure switch B 2P connector.

22. Select the VTEC TEST in the INSPECTION MENU with the HDS, and do the VTEC TEST.

23. Check the oil pressure during the Low V/T/LIFT and the High V/T/LIFT (TEST STATUS 3 and 4).

    Does the oil pressure increase to at least 191 kPa (2.0 kgf/cm², 27.7 psi)?

    YES—Replace rocker arm oil pressure switch B (see page 11-305), then go to step 29.

    NO—Inspect the VTEC system. If it is OK, replace the rocker arm oil control valve (see page 11-303), then go to step 29.

24. Turn the ignition switch to LOCK (0).

25. Jump the SCS line with the HDS.

26. Disconnect PCM connector B (49P).

27. Check for continuity between PCM connector terminal B43 and body ground.

PCM CONNECTOR B (49P)

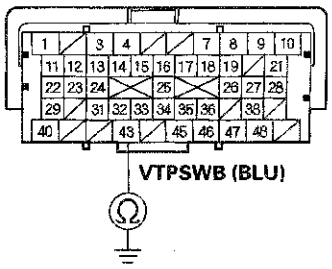

Terminal side of female terminals

Is there continuity?

YES—Repair short in the wire between the PCM (B43) and rocker arm oil pressure switch B, then go to step 29.

NO—Check for poor connections or loose terminals at rocker arm oil pressure switch B, rocker arm oil control solenoid B, and the PCM. If the connections and the terminals are OK, go to step 35.

(cont'd)

DTC Troubleshooting (cont'd)

28. Turn the ignition switch to LOCK (0).

29. Reconnect all connectors.

30. Turn the ignition switch to ON (II).

31. Reset the PCM with the HDS.

32. Do the PCM idle learn procedure (see page 11-317).

33. Select the VTEC TEST in the INSPECTION MENU with the HDS, and do the VTEC TEST.

    Are VTECEX-0 and VTECIN-0 indicated?

    YES—Go to step 34.

    NO—Check for poor connections or loose terminals at rocker arm oil pressure switch B, rocker arm oil control solenoid B, and the PCM, then go to step 1.

34. Check for Temporary DTCs or DTCs with the HDS.

    Are any Temporary DTCs or DTCs indicated?

    YES—If any other Temporary DTCs or DTCs are indicated, go to the indicated DTC's troubleshooting.■

    NO—Troubleshooting is complete.■

35. Reconnect all connectors.

36. Update the PCM if it does not have the latest software (see page 11-215), or substitute a known-good PCM (see page 11-7).

37. Select the VTEC TEST in the INSPECTION MENU with the HDS, and do the VTEC TEST.

    Are VTECEX-0 and VTECIN-0 indicated?

    YES—Go to step 38.

    NO—If the PCM was updated, substitute a known-good PCM (see page 11-7), then recheck. If the PCM was substituted, go to step 1.

38. Check for Temporary DTCs or DTCs with the HDS.

    Are any Temporary DTCs or DTCs indicated?

    YES—If any other Temporary DTCs or DTCs are indicated, go to the indicated DTC's troubleshooting.■

    NO—If the PCM was updated, troubleshooting is complete. If the PCM was substituted, replace the original PCM (see page 11-216).■

DTC P2653: Rocker Arm Oil Control Solenoid B (Exhaust Valve Side) Circuit Low Voltage

NOTE: Before you troubleshoot, record all freeze data and any on-board snapshot, and review the general troubleshooting information (see page 11-3).

1. Turn the ignition switch to ON (II).
2. Clear the DTC with the HDS.
3. Select the VTEC TEST in the INSPECTION MENU, and do the Solenoid Valve ACTIVATION of ROCKER ARM SOLENOID B with the HDS.
4. Check for Temporary DTCs or DTCs with the HDS.

   Is DTC P2653 indicated?

   YES—Go to step 5.

   NO—Intermittent failure, the system is OK at this time. Check for poor connections or loose terminals at rocker arm oil control solenoid B and the PCM.

5. Turn the ignition switch to LOCK (0).
6. Disconnect the rocker arm oil control solenoid B 2P connector.
7. Measure the resistance between rocker arm oil control solenoid B 2P connector terminals No. 1 and No. 2.

ROCKER ARM OIL CONTROL SOLENOID B 2P CONNECTOR

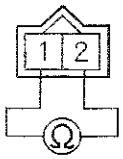

Terminal side of male terminals

Is there 14—30 Ω at room temperature?

YES—Go to step 8.

NO—Go to step 11.

8. Jump the SCS line with the HDS.
9. Disconnect PCM connector C (49P).
10. Check for continuity between PCM connector terminal C24 and body ground.

PCM CONNECTOR C (49P)

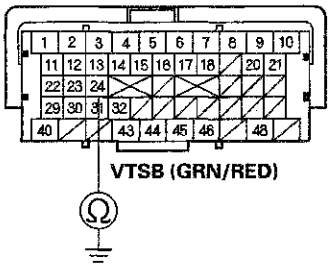

Terminal side of female terminals

Is there continuity?

YES—Repair short in the wire between the PCM (C24) and rocker arm oil control solenoid B, then go to step 12.

NO—Check for poor connections or loose terminals at the PCM and rocker arm oil control solenoid B, then go to step 19.

(cont'd)

DTC Troubleshooting (cont'd)

11. Replace the rocker arm oil control valve (see page 11-303).

12. Reconnect all connectors.

13. Turn the ignition switch to ON (II).

14. Reset the PCM with the HDS.

15. Do the PCM idle learn procedure (see page 11-317).

16. Select the VTEC TEST in the INSPECTION MENU with the HDS, and do the Solenoid Valve ACTIVATION of the ROCKER ARM SOLENOID B.

17. Check for Temporary DTCs or DTCs with the HDS.

    Is DTC P2653 indicated?

    YES—Check for poor connections or loose terminals at rocker arm oil control solenoid B and the PCM, then go to step 1.

    NO—Go to step 18.

18. Monitor the OBD STATUS for DTC P2653 in the DTCs MENU with the HDS.

    Does the screen indicate PASSED?

    YES—Troubleshooting is complete. If any other Temporary DTCs or DTCs were indicated in step 17, go to the indicated DTC's troubleshooting. ■

    NO—If the screen indicates FAILED, go to step 1 and recheck. If the screen indicates NOT COMPLETED, go to step 16.

19. Reconnect all connectors.

20. Update the PCM if it does not have the latest software (see page 11-215), or substitute a known-good PCM (see page 11-7).

21. Select the VTEC TEST in the INSPECTION MENU with the HDS, and do the Solenoid Valve ACTIVATION of the ROCKER ARM SOLENOID B.

22. Check for Temporary DTCs or DTCs with the HDS.

    Is DTC P2653 indicated?

    YES—Check for poor connections or loose terminals at rocker arm oil control solenoid B and the PCM. If the PCM was updated, substitute a known-good PCM (see page 11-7), then go to step 21. If the PCM was substituted, go to step 1.

    NO—Go to step 23.

23. Monitor the OBD STATUS for DTC P2653 in the DTCs MENU with the HDS.

    Does the screen indicate PASSED?

    YES—If the PCM was updated, troubleshooting is complete. If the PCM was substituted, replace the original PCM (see page 11-216). If any other Temporary DTCs or DTCs were indicated in step 22, go to the indicated DTC's troubleshooting. ■

    NO—If the screen indicates FAILED, check for poor connections or loose terminals at rocker arm oil control solenoid B and the PCM. If the PCM was updated, substitute a known-good PCM (see page 11-7), then go to step 21. If the PCM was substituted, go to step 1. If the screen indicates NOT COMPLETED, go to step 21.

DTC P2654: Rocker Arm Oil Control Solenoid B (Exhaust Valve Side) Circuit High Voltage

NOTE: Before you troubleshoot, record all freeze data and any on-board snapshot, and review the general troubleshooting information (see page 11-3).

1. Turn the ignition switch to ON (II).
2. Clear the DTC with the HDS.
3. Start the engine. Hold the engine speed at 3,000 rpm without load (in P or N) until the radiator fan comes on, then let it idle.
4. Check for Temporary DTCs or DTCs with the HDS.

   Is DTC P2654 indicated?

   YES—Go to step 5.

   NO—Intermittent failure, the system is OK at this time. Check for poor connections or loose terminals at rocker arm oil control solenoid B and the PCM. ■
5. Turn the ignition switch to LOCK (0).
6. Disconnect the rocker arm oil control solenoid B 2P connector.
7. Measure the resistance between rocker arm oil control solenoid B 2P connector terminals No. 1 and No. 2.

ROCKER ARM OIL CONTROL SOLENOID B 2P CONNECTOR

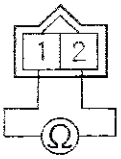

Terminal side of male terminals

Is there 14—30 Ω at room temperature?

YES—Go to step 8.

NO—Go to step 12.

8. Check for continuity between rocker arm oil control solenoid B 2P connector terminal No. 1 and body ground.

ROCKER ARM OIL CONTROL SOLENOID B 2P CONNECTOR

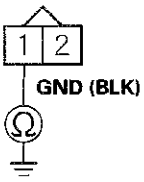

Wire side of female terminals

Is there continuity?

YES—Go to step 9.

NO—Repair open in the wire between the rocker arm oil control solenoid B and G101, then go to step 13.

9. Jump the SCS line with the HDS.
10. Disconnect PCM connector C (49P).

(cont'd)

DTC Troubleshooting (cont'd)

11. Check for continuity between PCM connector terminal C24 and rocker arm oil control solenoid B 2P connector terminal No. 2.

ROCKER ARM OIL CONTROL SOLENOID B 2P CONNECTOR

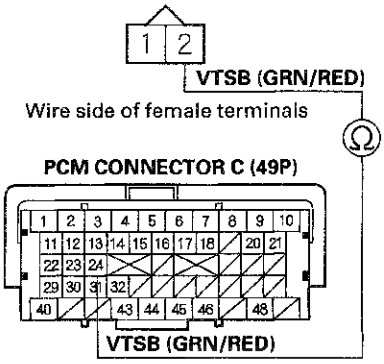

Terminal side of female terminals

Is there continuity?

YES—Go to step 19.

NO—Repair open in the wire between the PCM (C24) and the rocker arm oil control solenoid B, then go to step 13.

12. Reconnect all connectors.

13. Turn the ignition switch to ON (II).

14. Reset the PCM with the HDS.

15. Do the PCM idle learn procedure (see page 11-317).

16. Check for Temporary DTCs or DTCs with the HDS.

    Is DTC P2654 indicated?

    YES—Check for poor connections or loose terminals at rocker arm oil control solenoid B and the PCM, then go to step 1.

    NO—Go to step 17.

17. Monitor the OBD STATUS for DTC P2654 in the DTCs MENU with the HDS.

    Does the screen indicate PASSED?

    YES—Troubleshooting is complete. If any other Temporary DTCs or DTCs were indicated in step 16, go to the indicated DTC's troubleshooting. ■

    NO—If the screen indicates FAILED, go to step 1 and recheck. If the screen indicates NOT COMPLETED, keep idling until a result comes on.

18. Reconnect all connectors.

19. Update the PCM if it does not have the latest software (see page 11-215), or substitute a known-good PCM (see page 11-7).

20. Start the engine, and let it idle.

21. Check for Temporary DTCs or DTCs with the HDS.

    Is DTC P2654 indicated?

    YES—Check for poor connections or loose terminals at rocker arm oil control solenoid B and the PCM. If the PCM was updated, substitute a known-good PCM (see page 11-7), then recheck. If the PCM was substituted, go to step 1.

    NO—Go to step 22.

22. Monitor the OBD STATUS for DTC P2654 in the DTCs MENU with the HDS.

    Does the screen indicate PASSED?

    YES—If the PCM was updated, troubleshooting is complete. If the PCM was substituted, replace the original PCM (see page 11-216). If any other Temporary DTCs or DTCs were indicated in step 21, go to the indicated DTC's troubleshooting. ■

    NO—If the screen indicates FAILED, check for poor connections or loose terminals at rocker arm oil control solenoid B and the PCM. If the PCM was updated, substitute a known-good PCM (see page 11-7), then recheck. If the PCM was substituted, go to step 1. If the screen indicates NOT COMPLETED, keep idling until a result comes on.

VTC Oil Control Solenoid Valve Removal/Test/Installation

1. Disconnect the VTC oil control solenoid valve 2P connector (A).

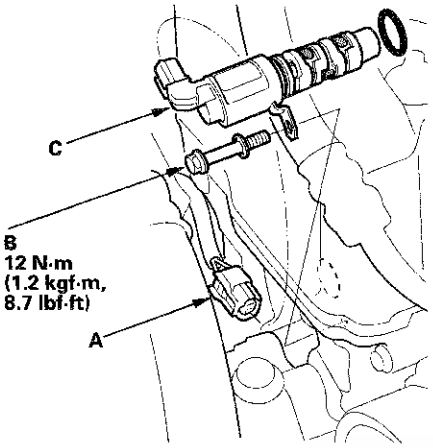

2. Remove the bolt (B) and the VTC oil control solenoid valve (C).

3. Check the VTC oil control solenoid valve strainer for clogging. If the strainer is clogged, replace the VTC oil control solenoid valve.

4. Note the amount of valve opening by observing the position of the piston shoulder (A) through the valve retard drain port. If you see the shoulder of the piston, the valve is open and must be replaced.

Closed

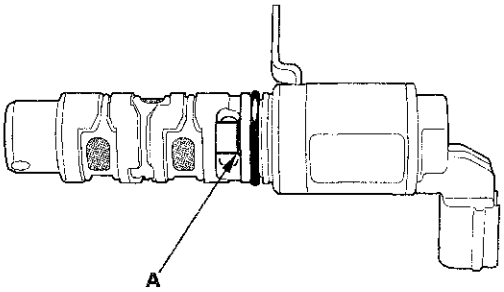

5. Connect the battery positive terminal to VTC oil control solenoid valve 2P connector terminal No. 2.

VTC OIL CONTROL SOLENOID VALVE 2P CONNECTOR

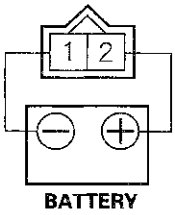

Terminal side of male terminals

6. Connect the battery negative terminal to VTC oil control solenoid valve 2P connector terminal No. 1. Appearance of the inner valve (A) in the port should be at least 0.05 in. (1.2 mm). If the inner valve does not open, replace it; then go to step 7.

Open

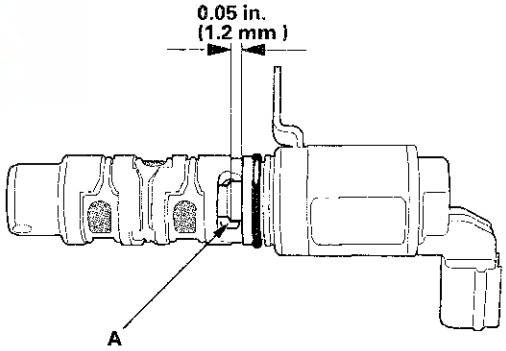

7. Remove the VTC oil control valve O-ring (A).

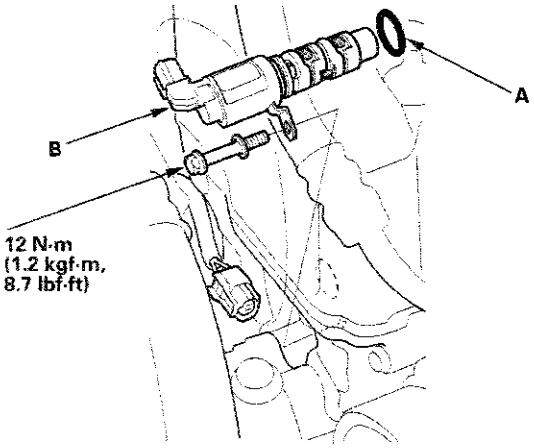

8. Coat a new O-ring with clean engine oil, then install it on the valve.

9. Clean and dry the mating surface of the valve.

10. Install the VTC oil control valve (B).

    NOTE: Do not install the valve while wearing cloth fibrous gloves. Be careful not to contaminate the cylinder head opening.

CMP Sensor A Replacement

1. Disconnect the CMP sensor A 3P connector (B).

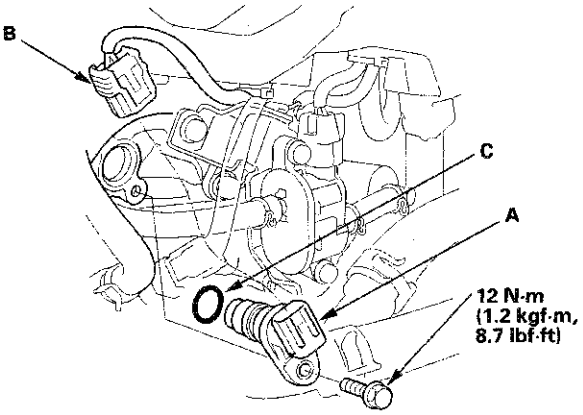

2. Remove CMP sensor A from the intake camshaft side of the cylinder head.

3. Install the parts in the reverse order of removal with a new O-ring (C).

Rocker Arm Oil Control Valve Removal/Installation

All models except PZEV

1. Remove the strut brace (see page 20-289).

2. Disconnect the rocker arm oil control solenoid connector (A) and the rocker arm oil pressure switch connector (B).

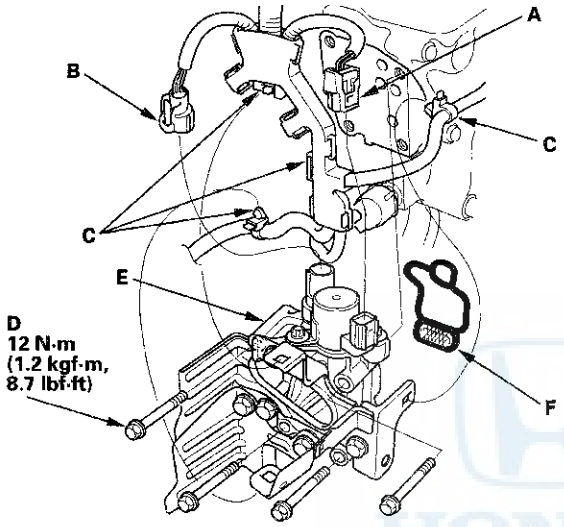

3. Remove the harness clamps (C) and the bolts (D).

4. Remove the rocker arm oil control valve assembly (E) and the rocker arm oil control valve filter (F).

5. Remove the engine wire harness bracket (A) (also (B) (if equipped)) from the rocker arm oil control valve (C).

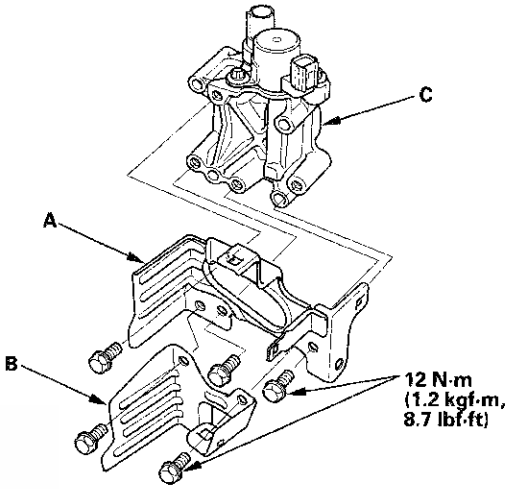

6. Install the parts in the reverse order of removal with a new rocker arm oil control valve filter.

PZEV model

1. Remove the strut brace (see page 20-289).

2. Disconnect the rocker arm oil control solenoid A connector (A), the rocker arm oil control solenoid B connector (B), the rocker arm oil pressure switch A connector (C), and the rocker arm oil pressure switch B connector (D).

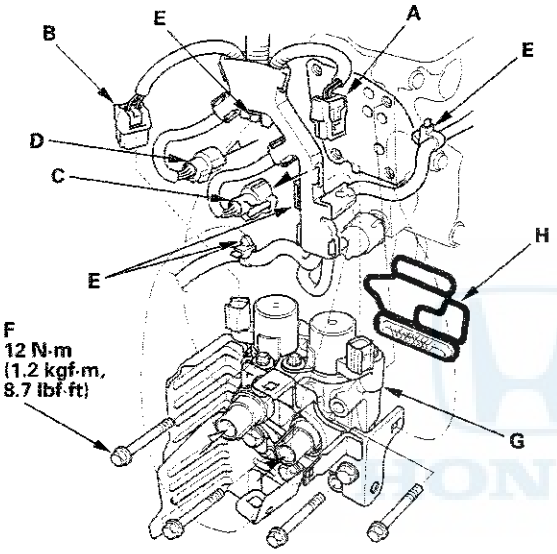

3. Remove the harness clamps (E) and the bolts (F).

4. Remove the rocker arm oil control valve assembly (G) and the rocker arm oil control valve filter (H).

5. Remove the engine wire harness bracket (A) (also (B) (if equipped)) from the rocker arm oil control valve (C).

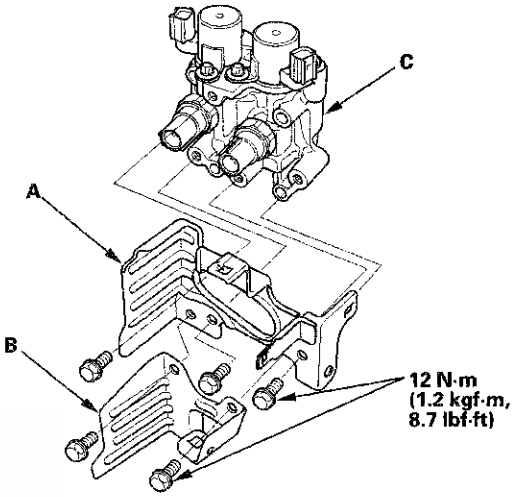

6. Install the parts in the reverse order of removal with a new rocker arm oil control valve filter.

Rocker Arm Oil Pressure Switch Removal/Installation

All models except PZEV

1. Disconnect the rocker arm oil pressure switch connector (A).

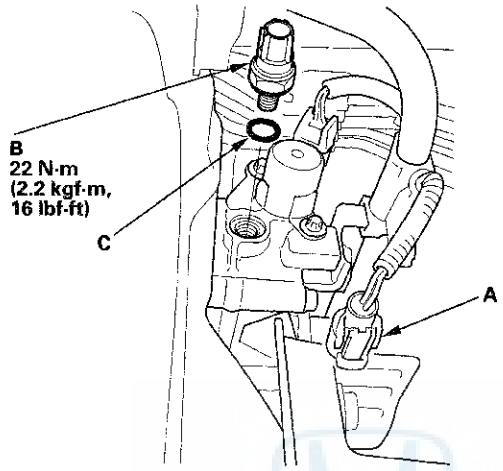

2. Remove the rocker arm oil pressure switch (B).

3. Install the parts in the reverse order of removal with a new O-ring (C).

Rocker Arm Oil Pressure Switch A Removal/Installation

PZEV model

1. Remove the rocker arm oil control valve (see page 11-303).

2. Remove rocker arm oil pressure switch A.

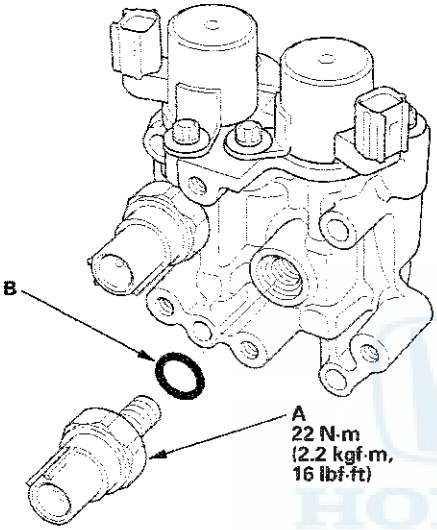

3. Install the parts in the reverse order of removal with a new O-ring (B).

Rocker Arm Oil Pressure Switch B Removal/Installation

PZEV model

1. Remove the rocker arm oil control valve (see page 11-303).

2. Remove rocker arm oil pressure switch B.

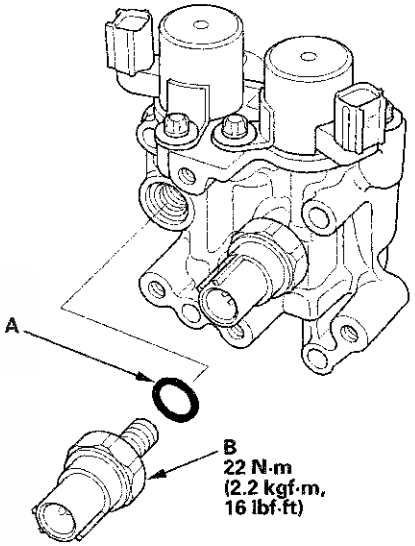

3. Install the parts in the reverse order of removal with a new O-ring (A).

Component Location Index

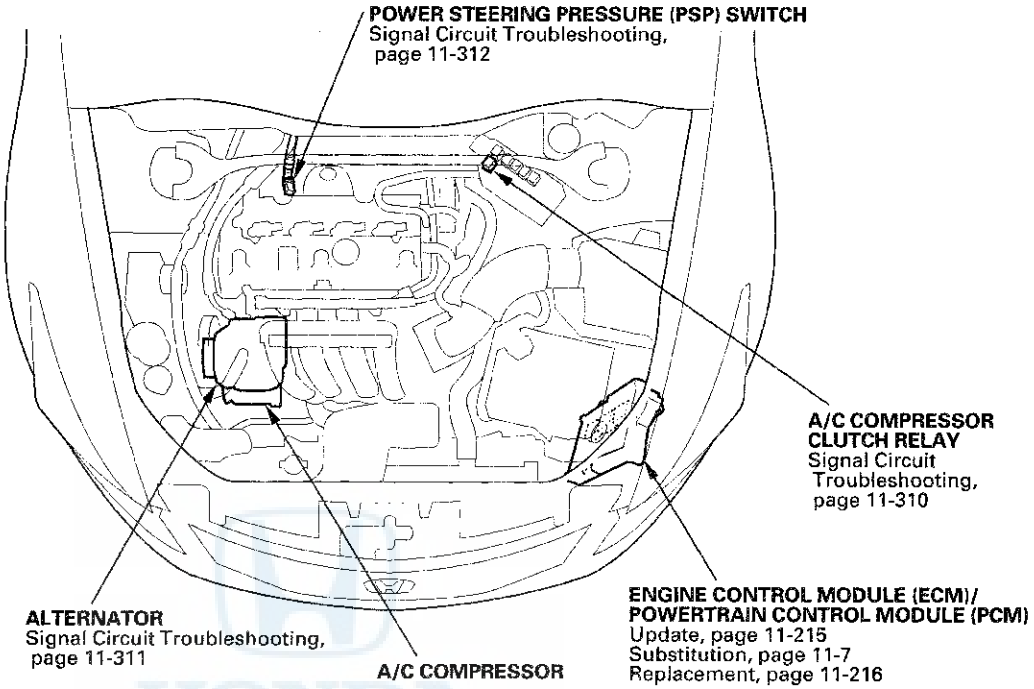

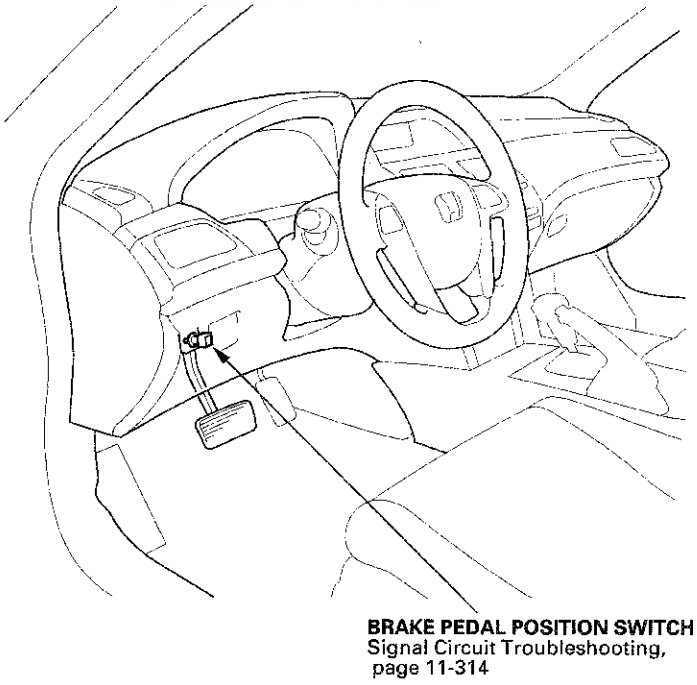

DTC Troubleshooting

DTC P0506: Idle Control System RPM Lower Than Expected

NOTE: Before you troubleshoot, record all freeze data and any on-board snapshot, and review the general troubleshooting information (see page 11-3).

1. Turn the ignition switch to ON (II).

2. Clear the DTC with the HDS.

3. Start the engine. Hold the engine speed at 3,000 rpm without load (A/T in P or N, M/T in neutral) until the radiator fan comes on, then let it idle.

4. Check under these DATA LIST parameter conditions with the HDS:

   - ECT SENSOR 1 above 156 °F (70 °C)
   - IAT SENSOR above 32 °F (0 °C)
   - VSS is 0 mph (0 km/h)
   - ST FUEL TRIM between 0.69—1.47
   - FSS is CLOSED

5. Monitor the OBD STATUS for DTC P0506 in the DTCs MENU with the HDS.

   Does the screen indicate FAILED?

   YES—Go to step 6.

   NO—If the screen indicates PASSED, go to step 15. If the screen indicates EXECUTING, keep idling until a result comes on. If the screen indicates OUT OF CONDITION or NOT COMPLETED, go to step 4 and recheck.

6. Remove the intake air duct from the throttle body (see page 11-362).

7. Check for dirt, carbon, or damage in the throttle bore.

   Is there dirt, carbon, or damage in the throttle bore?

   YES—If there is dirt or carbon, clean the throttle body (see page 11-359). Also check for damage to the air cleaner element (see page 11-360), then go to step 9. If there is damage in the throttle bore, go to step 8.

   NO—Check the A/C system or power steering system, then go to step 9.

8. Replace the throttle body (see page 11-362).

9. Reset the ECM/PCM with the HDS.

10. Do the ECM/PCM idle learn procedure (see page 11-317).

11. Start the engine. Hold the engine speed at 3,000 rpm without load (A/T in P or N, M/T in neutral) until the radiator fan comes on, then let it idle.

12. Check under these DATA LIST parameter conditions with the HDS:

    - ECT SENSOR 1 above 156 °F (70 °C)
    - IAT SENSOR above 32 °F (0 °C)
    - VSS is 0 mph (0 km/h)
    - ST FUEL TRIM between 0.69—1.47
    - FSS is CLOSED

13. Check for Temporary DTCs or DTCs with the HDS.

    Is DTC P0506 indicated?

    YES—Go to step 19.

    NO—Go to step 14.

(cont'd)

DTC Troubleshooting (cont'd)

14. Monitor the OBD STATUS for DTC P0506 in the DTCs MENU with the HDS.

    Does the screen indicate PASSED?

    YES—Troubleshooting is complete. If any other Temporary DTCs or DTCs were indicated in step 13, go to the indicated DTC's troubleshooting.■

    NO—If the screen indicates FAILED, go to step 19. If the screen indicates EXECUTING, keep idling until a result comes on. If the screen indicates OUT OF CONDITION or NOT COMPLETED, go to step 11 and recheck.

15. Remove the intake air duct from the throttle body (see page 11-362).

16. Check for dirt, carbon, or damage in the throttle bore.

    Is there dirt, carbon, or damage in the throttle bore?

    YES—If there is dirt or carbon, clean the throttle body (see page 11-359). Also check for damage to the air cleaner element (see page 11-360), then go to step 9. If there is damage in the throttle bore, go to step 8.

    NO—Go to step 17.

17. Recheck with different load conditions (turn on the headlights, blower motor, rear window defogger and/or A/C, change the gear position, etc.).

18. Monitor the OBD STATUS for DTC P0506 in the DTCs MENU with the HDS.

    Does the screen indicate PASSED?

    YES—Intermittent failure, the system is OK at this time.■

    NO—If the screen indicates FAILED, check the A/C system and/or power steering system, then go to step 1 and recheck. If the screen indicates EXECUTING, keep idling until a result comes on. If the screen indicates OUT OF CONDITION or NOT COMPLETED, go to step 17.

19. Update the ECM/PCM if it does not have the latest software (see page 11-215), or substitute a known-good ECM/PCM (see page 11-7).

20. Start the engine. Hold the engine speed at 3,000 rpm without load (A/T in P or N, M/T in neutral) until the radiator fan comes on, then let it idle.

21. Check under these DATA LIST parameter conditions with the HDS:

    - ECT SENSOR 1 above 156 °F (70 °C)
    - IAT SENSOR above 32 °F (0 °C)
    - VSS is 0 mph (0 km/h)
    - ST FUEL TRIM between 0.69—1.47
    - FSS is CLOSED

22. Check for Temporary DTCs or DTCs with the HDS.

    Is DTC P0506 indicated?

    YES—Check for poor connections or loose terminals at the throttle body and the ECM/PCM. If the ECM/PCM was updated, substitute a known-good ECM/PCM (see page 11-7), then go to step 20. If the ECM/PCM was substituted, go to step 1.

    NO—Go to step 23.

23. Monitor the OBD STATUS for DTC P0506 in the DTCs MENU with the HDS.

    Does the screen indicate PASSED?

    YES—If the ECM/PCM was updated, troubleshooting is complete. If the ECM/PCM was substituted, replace the original ECM/PCM (see page 11-216). If any other Temporary DTCs or DTCs were indicated in step 22, go to the indicated DTC's troubleshooting.■

    NO—If the screen indicates FAILED, check for poor connections or loose terminals at the throttle body and the ECM/PCM. If the ECM/PCM was updated, substitute a known-good ECM/PCM (see page 11-7), then go to step 20. If the ECM/PCM was substituted, go to step 1. If the screen indicates EXECUTING, keep idling until a result comes on. If the screen indicates OUT OF CONDITION or NOT COMPLETED, go to step 20.

DTC P0507: Idle Control System RPM Higher Than Expected

NOTE: Before you troubleshoot, record all freeze data and any on-board snapshot, and review the general troubleshooting information (see page 11-3).

1. Turn the ignition switch to ON (II).

2. Clear the DTC with the HDS.

3. Start the engine. Hold the engine speed at 3,000 rpm without load (A/T in P or N, M/T in neutral) until the radiator fan comes on, then let it idle for at least 20 seconds.

4. Monitor the OBD STATUS for DTC P0507 in the DTCs MENU with the HDS.

   Does the screen indicate FAILED?

   YES—Go to step 5.

   NO—If the screen indicates PASSED, intermittent failure, the system is OK at this time. If the screen indicates EXECUTING, keep idling until a result comes on. If the screen indicates OUT OF CONDITION or NOT COMPLETED, recheck with different load conditions (electrical, A/C, gear position, etc.), then go to step 3.

5. Check for vacuum leaks at these parts:

   - PCV valve
   - PCV hose
   - EVAP canister purge valve
   - Throttle body
   - Intake manifold
   - Brake booster hose
   - Brake booster

   Are there any leaks?

   YES—Repair or replace the leaking part(s), then go to step 6.

   NO—Go to step 6.

6. Turn the ignition switch to ON (II).

7. Reset the ECM/PCM with the HDS.

8. Do the ECM/PCM idle learn procedure (see page 11-317).

9. Start the engine. Hold the engine speed at 3,000 rpm without load (A/T in P or N, M/T in neutral) until the radiator fan comes on, then let it idle for at least 20 seconds.

10. Check for Temporary DTCs or DTCs with the HDS.

    Is DTC P0507 indicated?

    YES—Go to step 12.

    NO—Go to step 11.

11. Monitor the OBD STATUS for DTC P0507 in the DTCs MENU with the HDS.

    Does the screen indicate PASSED?

    YES—Troubleshooting is complete. If any other Temporary DTCs or DTCs were indicated in step 10, go to the indicated DTC's troubleshooting. ■

    NO—If the screen indicates FAILED, go to step 12. If the screen indicates EXECUTING, keep idling until a result comes on. If the screen indicates OUT OF CONDITION or NOT COMPLETED, recheck with different load conditions (turn on the headlights, blower motor, or A/C; change the gear position, etc.), then go to step 9.

(cont'd)

DTC Troubleshooting (cont'd)

12. Update the ECM/PCM if it does not have the latest software (see page 11-215), or substitute a known-good ECM/PCM (see page 11-7).

13. Start the engine. Hold the engine speed at 3,000 rpm without load (A/T in P or N, M/T in neutral) until the radiator fan comes on, then let it idle for at least 20 seconds.

14. Check for Temporary DTCs or DTCs with the HDS.

    Is DTC P0507 indicated?

    YES—Check for poor connections or loose terminals at the throttle body and the ECM/PCM. If the ECM/PCM was updated, substitute a known-good ECM/PCM (see page 11-7), then go to step 13. If the ECM/PCM was substituted, go to step 1.

    NO—Go to step 15.

15. Monitor the OBD STATUS for DTC P0507 in the DTCs MENU with the HDS.

    Does the screen indicate PASSED?

    YES—If the ECM/PCM was updated, troubleshooting is complete. If the ECM/PCM was substituted, replace the original ECM/PCM (see page 11-216). If any other Temporary DTCs or DTCs were indicated in step 14, go to the indicated DTC's troubleshooting.■

    NO—If the screen indicates FAILED, check for poor connections or loose terminals at the throttle body and the ECM/PCM. If the ECM/PCM was updated, substitute a known-good ECM/PCM (see page 11-7), then go to step 13. If the ECM/PCM was substituted, go to step 1. If the screen indicates EXECUTING, keep idling until a result comes on. If the screen indicates OUT OF CONDITION or NOT COMPLETED, go to step 13.

A/C Signal Circuit Troubleshooting

1. Start the engine, and let it idle.

2. Turn the blower switch on.

3. Turn the A/C switch on.

4. Check the A/C CLUTCH in the DATA LIST with the HDS.

   Does it indicate ON?

   YES—Go to step 5.

   NO—Do the A/C system test (see page 21-88).■

5. Check the A/C system.

   Does the A/C system operate?

   YES—The air conditioning system circuit is OK.■

   NO—Go to step 6.

6. Turn the ignition switch to LOCK (0).

7. Turn the ignition switch to ON (II).

8. Activate the A/C CLUTCH in the INSPECTION MENU with the HDS.

   Is there a clicking noise from the A/C compressor clutch?

   YES—Do the A/C system test (see page 21-88).■

   NO—Go to step 9.

9. Turn the ignition switch to LOCK (0).

10. Jump the SCS line with the HDS.

11. Disconnect ECM/PCM connector A (49P).

12. Turn the ignition switch to ON (II).

13. Momentarily connect ECM/PCM connector terminal A15 to body ground with a jumper wire several times.

ECM/PCM CONNECTOR A (49P)

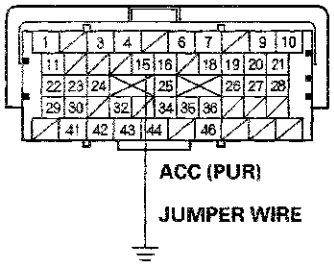

Terminal side of female terminals

Is there a clicking noise from the A/C compressor clutch?

YES—Update the ECM/PCM if it does not have the latest software (see page 11-215), or substitute a known-good ECM/PCM (see page 11-7), then recheck. If the symptom/indication goes away with a known-good ECM/PCM, replace the original ECM/PCM (see page 11-216).■

NO—Check for poor connections or loose terminals at the A/C compressor clutch relay and the ECM/PCM. If the connections are OK, check the A/C compressor clutch relay (see page 22-91). If needed, repair open in the wire between the ECM/PCM (A15), the A/C compressor clutch relay, and the other A/C systems.■

Alternator FR Signal Circuit Troubleshooting

1. Start the engine, and let it idle.
2. Monitor the ALTERNATOR in the DATA LIST with the HDS.
3. Check if the indicated percentage varies when the headlight switch is turned on.

   Does the percentage vary?

   YES—The alternator signal circuit is OK.■

   NO—Go to step 4.

4. Turn the headlight switch off and ignition switch to LOCK (0).
5. Jump the SCS line with the HDS.
6. Disconnect the alternator 4P connector.
7. Disconnect ECM/PCM connector B (49P).
8. Check for continuity between ECM/PCM connector terminal B47 and body ground.

ECM/PCM CONNECTOR B (49P)

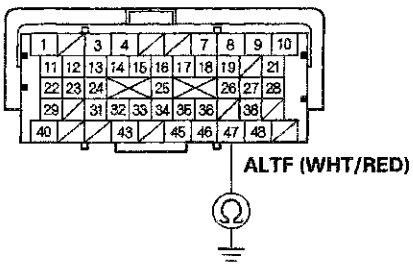

Terminal side of female terminals

Is there continuity?

YES—Repair short in the wire between the ECM/PCM (B47) and the alternator.■

NO—Update the ECM/PCM if it does not have the latest software (see page 11-215), or substitute a known-good ECM/PCM (see page 11-7), then recheck. If the symptom/indication goes away with a known-good ECM/PCM, replace the original ECM/PCM (see page 11-216).■

PSP Switch Signal Circuit Troubleshooting

1. Start the engine, and let it idle.
2. Align the steering wheel straight ahead.
3. Check the PSP SWITCH in the DATA LIST with the HDS.

   Does it indicate ON?

   YES—Go to step 4.

   NO—Go to step 14.
4. Turn the steering wheel to the full lock position.
5. Check the PSP SWITCH in the DATA LIST with the HDS.

   Does it change to OFF?

   YES—The PSP switch signal circuit is OK. ■

   NO—Go to step 6.
6. Turn the ignition switch to LOCK (0).
7. Disconnect the PSP switch 2P connector.
8. Start the engine.
9. Check the PSP SWITCH in the DATA LIST with the HDS.

   Does it change to OFF?

   YES—Replace the PSP switch (see page 17-15). ■

   NO—Go to step 10.
10. Turn the ignition switch to LOCK (0).
11. Jump the SCS line with the HDS.
12. Disconnect ECM/PCM connector A (49P).
13. Check for continuity between PSP switch 2P connector terminal No. 1 and body ground.

PSP SWITCH 2P CONNECTOR

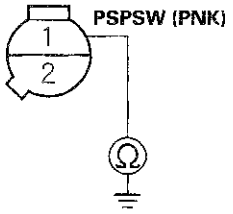

Wire side of female terminals

Is there continuity?

YES—Repair short in the wire between the ECM/PCM (A23) and the PSP switch. ■

NO—Update the ECM/PCM if it does not have the latest software (see page 11-215), or substitute a known-good ECM/PCM (see page 11-7), then recheck. If the symptom/indication goes away with a known-good ECM/PCM, replace the original ECM/PCM (see page 11-216). ■

14. Turn the ignition switch to LOCK (0).
15. Disconnect the PSP switch 2P connector.
16. Connect PSP switch 2P connector terminals No. 1 and No. 2 with a jumper wire, then start the engine.

PSP SWITCH 2P CONNECTOR

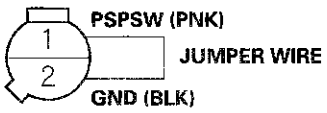

Wire side of female terminals

17. Check the PSP SWITCH in the DATA LIST with the HDS.

Does it change to ON?

YES—Replace the PSP switch (see page 17-15).■

NO—Go to step 18.

18. Turn the ignition switch to LOCK (0).

19. Remove the jumper wire from the PSP switch 2P connector.

20. Jump the SCS line with the HDS.

21. Disconnect ECM/PCM connector A (49P).

22. Connect PSP switch 2P connector terminal No. 1 to body ground with a jumper wire.

PSP SWITCH 2P CONNECTOR

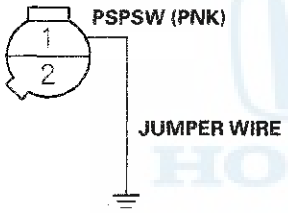

Wire side of female terminals

23. Check for continuity between ECM/PCM connector terminal A23 and body ground.

ECM/PCM CONNECTOR A (49P)

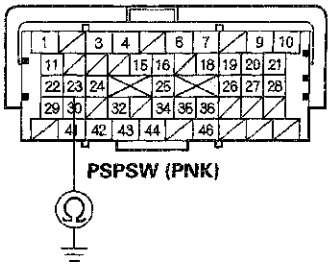

Terminal side of female terminals

Is there continuity?

YES—Go to step 24.

NO—Repair open in the wire between the PSP switch and the ECM/PCM (A23).■

24. Check for continuity between PSP switch 2P connector terminal No. 2 and body ground.

PSP SWITCH 2P CONNECTOR

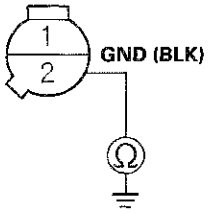

Wire side of female terminals

Is there continuity?

YES—Update the ECM/PCM if it does not have the latest software (see page 11-215), or substitute a known-good ECM/PCM (see page 11-7), then recheck. If the symptom/indication goes away with a known-good ECM/PCM, replace the original ECM/PCM (see page 11-216).■

NO—Repair open in the wire between the PSP switch and G201 (see page 22-24).■

Brake Pedal Position Switch Signal Circuit Troubleshooting

1. Turn the ignition switch to ON (II).

2. Check the BRAKE SWITCH in the DATA LIST with the HDS.

   Does it indicate OFF?

   YES—Go to step 3.

   NO—Inspect the brake pedal position switch (see page 19-6).■

3. Press the brake pedal, and check the BRAKE SWITCH in the DATA LIST with the HDS.

   Does it change to ON?

   YES—The brake pedal position switch signal circuit (BKSW line) is OK.■

   NO—Go to step 4.

4. Turn the ignition switch to LOCK (0).

5. Jump the SCS line with the HDS.

6. Disconnect the brake pedal position switch 4P connector.

7. Disconnect ECM/PCM connector A (49P).

8. Check for continuity between ECM/PCM connector terminal A42 and body ground.

ECM/PCM CONNECTOR A (49P)

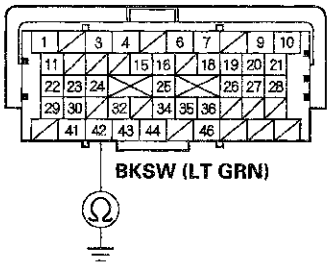

Terminal side of female terminals

Is there continuity?

YES—Repair short in the wire between the ECM/PCM (A42) and the brake pedal position switch. Replace the No. 10 HORN/STOP (20 A) fuse.■

NO—Go to step 9.

9. Connect brake pedal position switch 4P connector terminal No. 2 to body ground with a jumper wire.

BRAKE PEDAL POSITION SWITCH 4P CONNECTOR

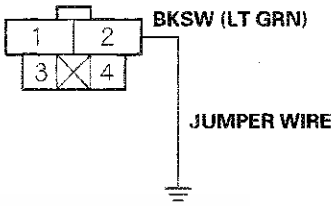

Wire side of female terminals

10. Check for continuity between ECM/PCM connector terminal A42 and body ground.

ECM/PCM CONNECTOR A (49P)

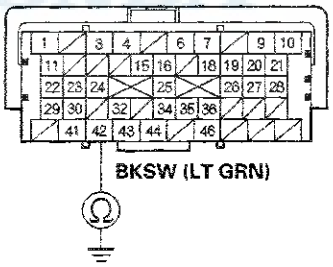

Terminal side of female terminals

Is there continuity?

YES—Repair open in the wire between the brake pedal position switch and the No. 10 HORN/STOP (20 A) fuse. Inspect the brake pedal position switch (see page 19-6).■

NO—Repair open in the wire between the ECM/PCM (A42) and the brake pedal position switch.■

Idle Speed Inspection

NOTE:
- Before checking the idle speed, check these items:
  - The malfunction indicator lamp (MIL) has not been reported on, and there are no DTCs.
  - Ignition timing
  - Spark plugs
  - Air cleaner
  - PCV system
- Apply the parking brake, and make sure the headlights are off.

1. Disconnect the evaporative emission (EVAP) canister purge valve connector.

2. Connect the HDS to the data link connector (DLC) (A) located under the driver's side of the dashboard.

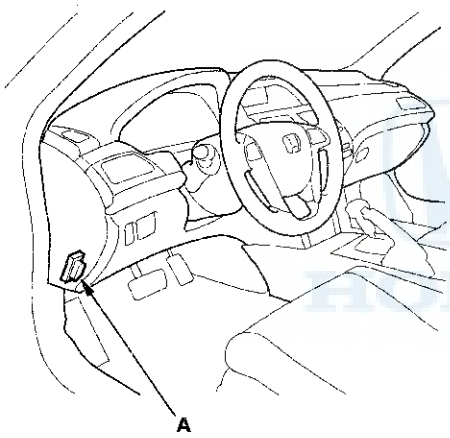

3. Make sure the HDS communicates with the ECM/PCM. If it doesn't, go to the DLC circuit troubleshooting (see page 11-192).

4. Start the engine. Hold the engine speed at 3,000 rpm without load (A/T in P or N, M/T in neutral) until the radiator fan comes on, then let it idle.

5. Check the idle speed without load conditions: headlights, blower fan, radiator fan, and air conditioner off.

Idle speed should be:

M/T	**780±50 rpm**
A/T	**800±50 rpm (in P or N)**

6. Let the engine idle for 1 minute with high electric load (A/C switch on, temperature set to max cool, blower fan on high, and headlights on high beam).

Idle speed should be:

M/T	**780±50 rpm**
A/T	**800±50 rpm (in P or N)**

NOTE: If the idle speed is not within specification, do the ECM/PCM idle learn procedure (see page 11-317). If the idle speed is still not within specification, go to the symptom troubleshooting.

7. Reconnect the EVAP canister purge valve connector.

ECM/PCM Idle Learn Procedure

The idle learn procedure must be done so the ECM/PCM can learn the engine idle characteristics.

Do the idle learn procedure whenever you do any of these actions:

- Replace ECM/PCM.
- Reset ECM/PCM.
- Update ECM/PCM.
- Replace or clean the throttle body.
- Disassemble the engine or the transmission.

NOTE: Erasing DTCs with the HDS does not require you to do the idle learn procedure.

Procedure

1. Make sure all electrical items (A/C, audio, lights, etc.) are off.

2. Reset the ECM/PCM with the HDS.

3. Turn the ignition switch to ON (II), and wait 2 seconds.

4. Start the engine. Hold the engine speed at 3,000 rpm without load (A/T in P or N, M/T in neutral) until the radiator fan comes on, or until the engine coolant temperature reaches 194 °F (90 °C).

5. Let the engine idle for about 5 minutes with the throttle fully closed.

   NOTE: If the radiator fan comes on, do not include its running time in the 5 minutes.

6. Verify on the HDS data list that the idle learn procedure is complete.

Component Location Index

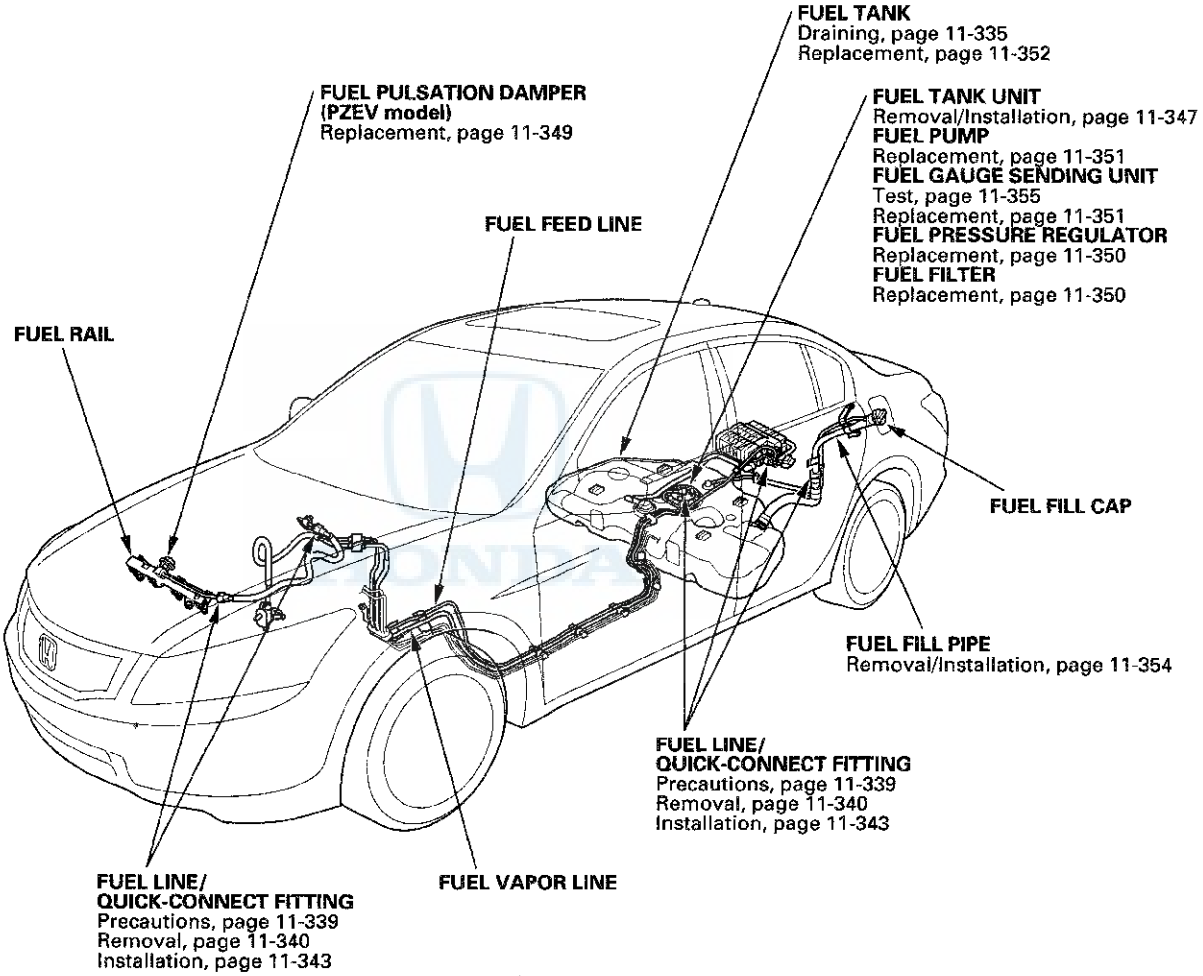

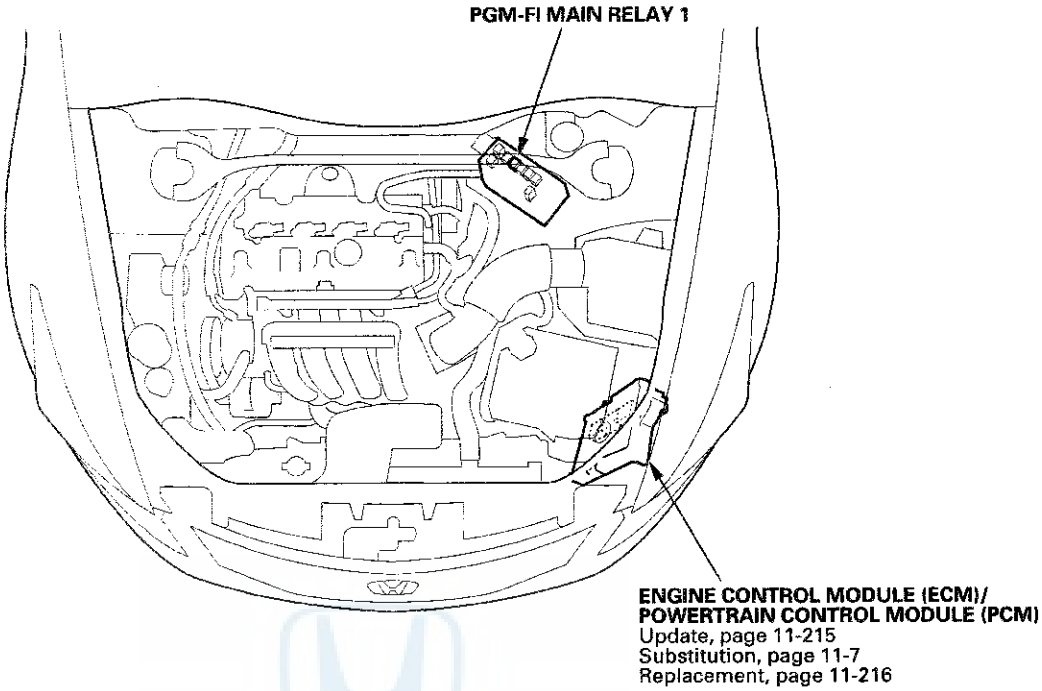
PGM-FI MAIN RELAY 1
ENGINE CONTROL MODULE (ECM)/
POWERTRAIN CONTROL MODULE (PCM)
Update, page 11-215
Substitution, page 11-7
Replacement, page 11-216

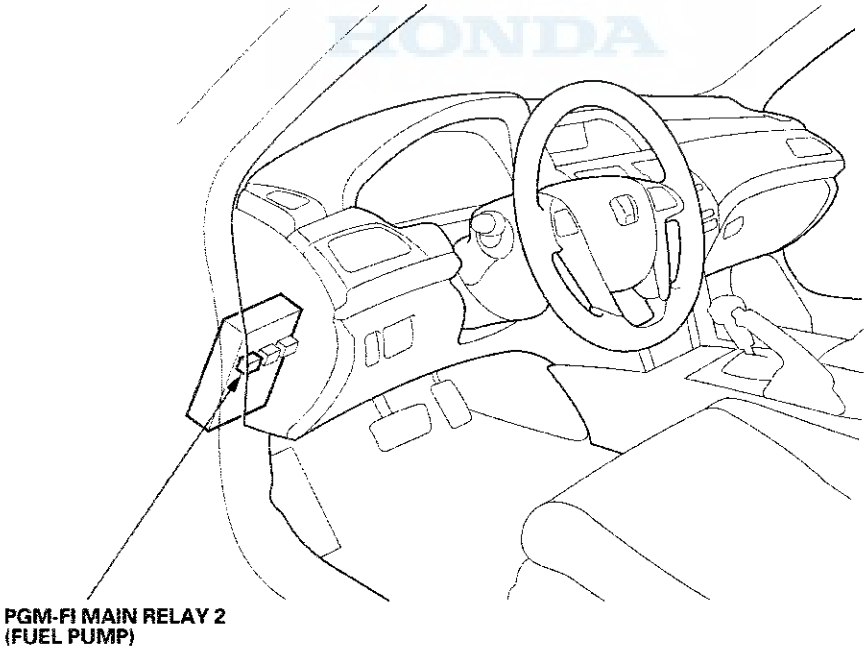
PGM-FI MAIN RELAY 2
(FUEL PUMP)

DTC Troubleshooting

DTC P0461: Fuel Level Sensor (Fuel Gauge Sending Unit) Circuit Range/Performance Problem

NOTE:
- Before you troubleshoot, record all freeze data and any on-board snapshot, and review the general troubleshooting information (see page 11-3).
- Because it requires 162 miles (260 km) of driving without refueling to complete this diagnosis, DTC P0461 cannot be duplicated during this troubleshooting.

1. Test the fuel gauge sending unit (see page 11-355).

   Is the fuel gauge sending unit OK?

   YES—Check for poor connections or loose terminals at the fuel gauge sending unit and the gauge control module. ■

   NO—Replace the fuel gauge sending unit (see page 11-351), then go to step 2.

2. Turn the ignition switch to ON (II).

3. Reset the ECM/PCM with the HDS.

4. Do the ECM/PCM idle learn procedure (see page 11-317).

5. Check for Temporary DTCs or DTCs with the HDS.

   Are any Temporary DTCs or DTCs indicated?

   YES—Go to the indicated DTC's troubleshooting.

   NO—Troubleshooting is complete. ■

DTC P0462: Fuel Level Sensor (Fuel Gauge Sending Unit) Circuit Low Voltage

NOTE: Before you troubleshoot, record all freeze data and any on-board snapshot, and review the general troubleshooting information (see page 11-3).

1. Turn the ignition switch to ON (II).

2. Clear the DTC with the HDS, and wait 5 seconds.

3. Check for Temporary DTCs or DTCs with the HDS.

   Is DTC P0462 indicated?

   YES—Go to step 4.

   NO—Intermittent failure, the system is OK at this time. Check for poor connections or loose terminals at the gauge control module and the fuel gauge sending unit. ■

4. Turn the ignition switch to LOCK (0).

5. Remove the rear seat cushion (see page 20-225).

6. Remove the access panel from the floor (see page 11-347).

7. Disconnect the fuel tank unit 4P connector.

8. Turn the ignition switch to ON (II).

9. Clear the DTC with the HDS, and wait 5 seconds.

10. Check for Temporary DTCs or DTCs with the HDS.

    Is DTC P0463 indicated?

    YES—Replace the fuel gauge sending unit (see page 11-351), then go to step 23.

    NO—Go to step 11.

11. Measure the voltage between fuel tank unit 4P connector terminal No. 1 and body ground.

FUEL TANK UNIT 4P CONNECTOR

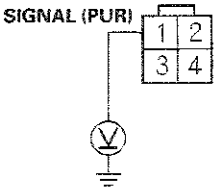

Wire side of female terminals

Is there battery voltage?

YES—Go to step 16.

NO—Go to step 12.

12. Turn the ignition switch to LOCK (0).

13. Remove the gauge control module (see page 22-324).

14. Disconnect the gauge control module 32P connector.

15. Check for continuity between fuel tank unit 4P connector terminal No. 1 and body ground.

FUEL TANK UNIT 4P CONNECTOR

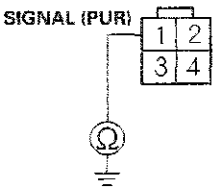

Wire side of female terminals

Is there continuity?

YES—Repair short in the wire between the gauge control module (signal line) and the fuel gauge sending unit, then go to step 24.

NO—Replace the gauge control module (see page 22-324), then go to step 24.

16. Turn the ignition switch to LOCK (0).

17. Remove the fuel tank unit (see page 11-347).

18. Connect the fuel tank unit 4P connector.

19. Turn the ignition switch to ON (II).

20. Clear the DTC with the HDS.

21. Set the float (A) to the E position.

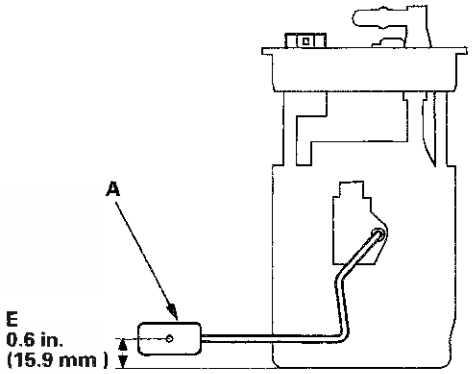

22. Check the fuel gauge.

Does the gauge move to the empty position?

YES—Go to step 30.

NO—Replace the gauge control module (see page 22-324), then go to step 23.

23. Turn the ignition switch to LOCK (0).

24. Reconnect all connectors.

25. Install the parts in the reverse order of removal.

(cont'd)

DTC Troubleshooting (cont'd)

26. Turn the ignition switch to ON (II).

27. Reset the ECM/PCM with the HDS.

28. Do the ECM/PCM idle learn procedure (see page 11-317).

29. Check for Temporary DTCs or DTCs with the HDS.

    Is DTC P0462 indicated?

    YES—Check for poor connections or loose terminals at the gauge control module and the fuel gauge sending unit, then go to step 1.

    NO—Troubleshooting is complete. If any other Temporary DTCs or DTCs are indicated, go to the indicated DTC's troubleshooting. ■

30. Turn the ignition switch to LOCK (0).

31. Install the parts in the reverse order of removal.

32. Reconnect all connectors.

33. Update the ECM/PCM if it does not have the latest software (see page 11-215), or substitute a known-good ECM/PCM (see page 11-7).

34. Check for Temporary DTCs or DTCs with the HDS.

    Is DTC P0462 indicated?

    YES—Check for poor connections or loose terminals at the gauge control module and the fuel gauge sending unit. If the ECM/PCM was updated, substitute a known-good ECM/PCM (see page 11-7), then recheck. If the ECM/PCM was substituted, go to step 1.

    NO—If the ECM/PCM was updated, troubleshooting is complete. If the ECM/PCM was substituted, replace the original ECM/PCM (see page 11-216). If any other Temporary DTCs or DTCs are indicated, go to the indicated DTC's troubleshooting. ■

DTC P0463: Fuel Level Sensor (Fuel Gauge Sending Unit) Circuit High Voltage

NOTE: Before you troubleshoot, record all freeze data and any on-board snapshot, and review the general troubleshooting information (see page 11-3).

1. Turn the ignition switch to ON (II).

2. Clear the DTC with the HDS, and wait 5 seconds.

3. Check for Temporary DTCs or DTCs with the HDS.

   Is DTC P0463 indicated?

   YES—Go to step 4.

   NO—Intermittent failure, the system is OK at this time. Check for poor connections or loose terminals at the gauge control module and the fuel gauge sending unit. ■

4. Turn the ignition switch to LOCK (0).

5. Remove the rear seat cushion (see page 20-225).

6. Remove the access panel from the floor (see page 11-347).

7. Disconnect the fuel tank unit 4P connector.

8. Turn the ignition switch to ON (II).

9. Measure the voltage between fuel tank unit 4P connector terminals No. 1 and No. 3.

FUEL TANK UNIT 4P CONNECTOR

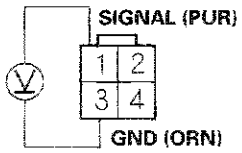

Wire side of female terminals

Is there battery voltage?

YES—Go to step 17.

NO—Go to step 10.

10. Turn the ignition switch to LOCK (0).

11. Connect fuel tank unit 4P connector terminal No. 3 to body ground with a jumper wire.

FUEL TANK UNIT 4P CONNECTOR

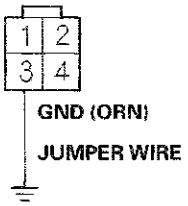

Wire side of female terminals

12. Remove the gauge control module (see page 22-324).

13. Disconnect the gauge control module 32P connector.

14. Check for continuity between gauge control module 32P connector terminal No. 28 and body ground.

GAUGE CONTROL MODULE 32P CONNECTOR

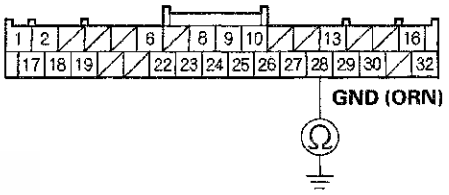

Wire side of female terminals

Is there continuity?

YES—Go to step 15.

NO—Repair open in the wire between the gauge control module (GND line) and the fuel gauge sending unit, then go to step 27.

(cont'd)

DTC Troubleshooting (cont'd)

15. Connect fuel tank unit 4P connector terminal No. 1 to body ground with a jumper wire.

FUEL TANK UNIT 4P CONNECTOR

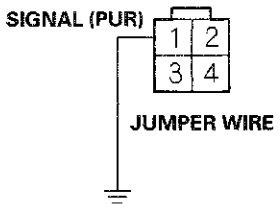

Wire side of female terminals

16. Check for continuity between gauge control module 32P connector terminal No. 27 and body ground.

GAUGE CONTROL MODULE 32P CONNECTOR

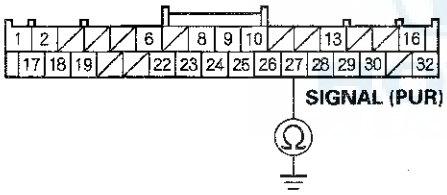

Wire side of female terminals

Is there continuity?

YES—Remove the jumper wire, then go to step 18.

NO—Repair open in the wire between the gauge control module (signal line) and the fuel gauge sending unit, then go to step 27.

17. Turn the ignition switch to LOCK (0).

18. Remove the fuel tank unit (see page 11-347).

19. Test the fuel gauge sending unit (see page 11-355).

Is the fuel gauge sending unit OK?

YES—Go to step 20.

NO—Replace the fuel gauge sending unit (see page 11-351), then go to step 26.

20. Connect the fuel tank unit 4P connector.

21. Reconnect the gauge control module 32P connector.

22. Turn the ignition switch to ON (II).

23. Clear the DTC with the HDS.

24. Set the float (A) to the F position.

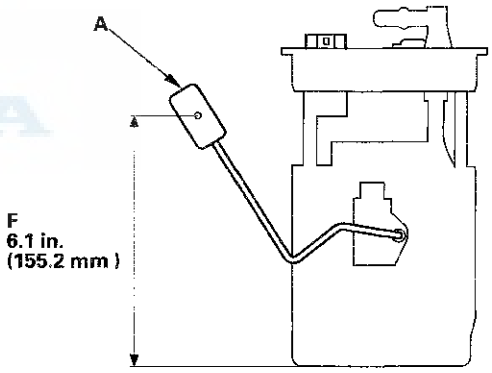

25. Check the fuel gauge.

Does the gauge move to the full position?

YES—Go to step 33.

NO—Replace the gauge control module (see page 22-324), then go to step 26.

26. Turn the ignition switch to LOCK (0).

27. Reconnect all connectors.

28. Install the parts in the reverse order of removal.

29. Turn the ignition switch to ON (II).

30. Reset the ECM/PCM with the HDS.

31. Do the ECM/PCM idle learn procedure (see page 11-317).

32. Check for Temporary DTCs or DTCs with the HDS.

    Is DTC P0463 indicated?

    YES—Check for poor connections or loose terminals at the gauge control module and the fuel gauge sending unit, then go to step 1.

    NO—Troubleshooting is complete. If any other Temporary DTCs or DTCs are indicated, go to the indicated DTC's troubleshooting. ■

33. Turn the ignition switch to LOCK (0).

34. Install the parts in the reverse order of removal.

35. Reconnect all connectors.

36. Update the ECM/PCM if it does not have the latest software (see page 11-215), or substitute a known-good ECM/PCM (see page 11-7).

37. Check for Temporary DTCs or DTCs with the HDS.

    Is DTC P0463 indicated?

    YES—Check for poor connections or loose terminals at the gauge control module and the fuel gauge sending unit. If the ECM/PCM was updated, substitute a known-good ECM/PCM (see page 11-7), then recheck. If the ECM/PCM was substituted, go to step 1.

    NO—If the ECM/PCM was updated, troubleshooting is complete. If the ECM/PCM was substituted, replace the original ECM/PCM (see page 11-216). If any other Temporary DTCs or DTCs are indicated, go to the indicated DTC's troubleshooting. ■

Fuel Pump Circuit Troubleshooting

If you suspect a problem with the fuel pump, check that the fuel pump actually runs; when it is on, you will hear some noise if you listen to the fuel fill port with the fuel fill cap removed. The fuel pump should run for 2 seconds when the ignition switch is turned on. If the fuel pump does not make noise, check as follows:

1. Turn the ignition switch to LOCK (0).
2. Remove the driver's dashboard lower cover (see page 20-153).
3. Remove PGM-FI main relay 2 (FUEL PUMP) (A) in the driver's under-dash fuse/relay box.

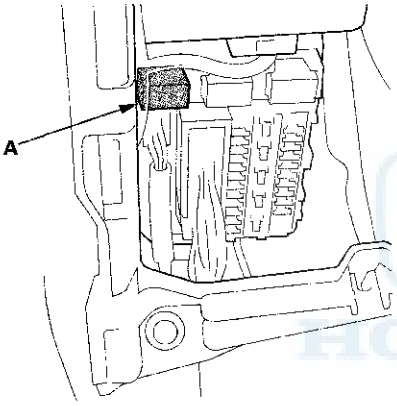

4. Turn the ignition switch to ON (II).
5. Measure the voltage between PGM-FI main relay 2 (FUEL PUMP) 4P connector terminal No. 4 and body ground.

PGM-FI MAIN RELAY 2 (FUEL PUMP) 4P CONNECTOR

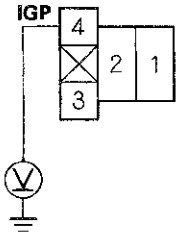

Terminal side of female terminals

Is there battery voltage?

YES—Go to step 14.

NO—Go to step 6.

6. Turn the ignition switch to LOCK (0).
7. Remove PGM-FI main relay 1 (A) and the ETCS control relay (B) from the under-hood fuse/relay box.

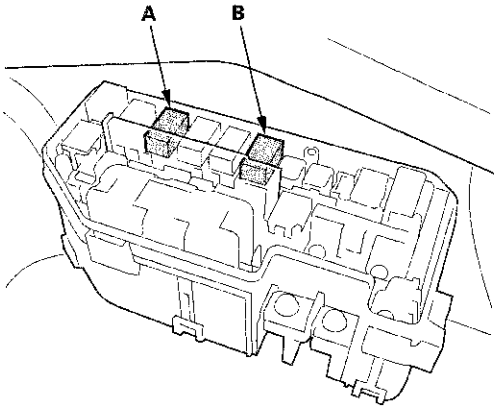

8. Jump the SCS line with the HDS.

9. Disconnect ECM/PCM connector A (49P).

10. Disconnect engine wire harness connector C101 at the left side of the engine compartment.

11. Disconnect the driver's under-dash fuse/relay box connector F (33P).

12. Connect PGM-FI main relay 1 4P connector terminal No. 2 to body ground with a jumper wire.

PGM-FI MAIN RELAY 1 4P CONNECTOR

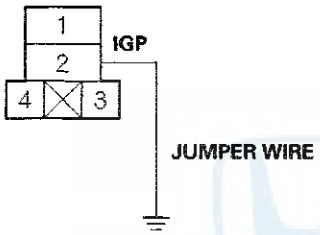

Terminal side of female terminals

13. Check for continuity between driver's under-dash fuse/relay box connector F (33P) terminal No. 31 and body ground.

DRIVER'S UNDER-DASH FUSE/RELAY BOX CONNECTOR F (33P)

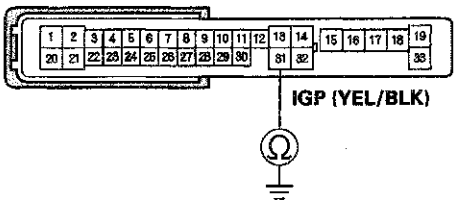

Wire side of female terminals

Is there continuity?

YES—Replace the driver's under-dash fuse/relay box (see page 22-84).■

NO—
- Repair open in the wire between the under-hood fuse/relay box and the driver's under-dash fuse/relay box.■
- If the wire is OK, replace the under-hood fuse/relay box (see page 22-84).■

(cont'd)

Fuel Pump Circuit Troubleshooting (cont'd)

14. Measure the voltage between PGM-FI main relay 2 (FUEL PUMP) 4P connector terminal No. 2 and body ground.

PGM-FI MAIN RELAY 2 (FUEL PUMP) 4P CONNECTOR

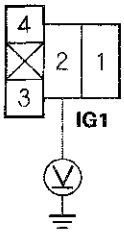

Terminal side of female terminals

Is there battery voltage?

YES—Go to step 15.

NO—
- Check the No. 9 FUEL PUMP (20 A) fuse in the driver's under-dash fuse/relay box. ■
- If the fuse is OK, replace the driver's under-dash fuse/relay box (see page 22-84). ■

15. Turn the ignition switch to LOCK (0).

16. Connect PGM-FI main relay 2 (FUEL PUMP) 4P connector terminal No. 3 to body ground with a jumper wire.

PGM-FI MAIN RELAY 2 (FUEL PUMP) 4P CONNECTOR

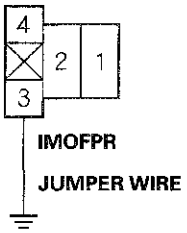

Terminal side of female terminals

17. Jump the SCS line with the HDS.

18. Disconnect ECM/PCM connector A (49P).

19. Check for continuity between body ground and ECM/PCM connector terminal A16.

ECM/PCM CONNECTOR A (49P)

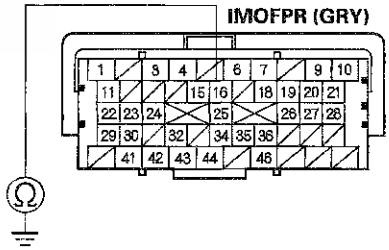

Terminal side of female terminals

Is there continuity?

YES—Go to step 20.

NO—Repair open in the wire between PGM-FI main relay 2 (FUEL PUMP) and the ECM/PCM (A16). ■

20. Reinstall PGM-FI main relay 2 (FUEL PUMP).

21. Connect ECM/PCM connector terminal A7 to body ground with a jumper wire.

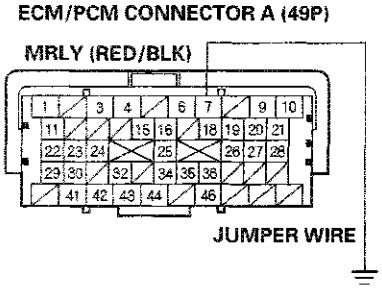

Terminal side of female terminals

22. Turn the ignition switch to ON (II).

23. Measure the voltage between ECM/PCM connector terminal A16 and body ground.

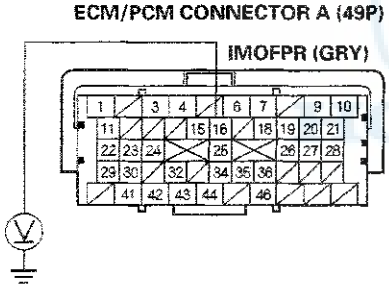

Terminal side of female terminals

Is there battery voltage?

YES—Go to step 24.

NO—Replace PGM-FI main relay 2 (FUEL PUMP). ■

24. Turn the ignition switch to LOCK (0).

25. Reconnect ECM/PCM connector A (49P).

26. Turn the ignition switch to ON (II), and measure the voltage between driver's under-dash fuse/relay box connector F (33P) terminal No. 22 and body ground within 2 seconds.

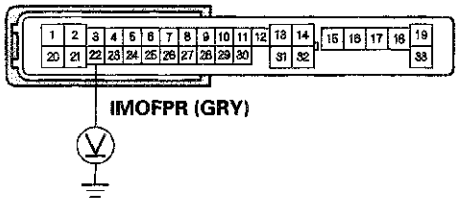

Wire side of female terminals

Is there battery voltage?

YES—Update the ECM/PCM if it does not have the latest software (see page 11-215), or substitute a known-good ECM/PCM (see page 11-7), then recheck. If the symptom/indication goes away with a known-good ECM/PCM, replace the original ECM/PCM (see page 11-216). ■

NO—Go to step 27.

(cont'd)

Fuel Pump Circuit Troubleshooting (cont'd)

27. Turn the ignition switch to ON (II), and measure the voltage between driver's under-dash fuse/relay box connector F (33P) terminal No. 22 and body ground after 2 seconds.

DRIVER'S UNDER-DASH FUSE/RELAY BOX CONNECTOR F (33P)

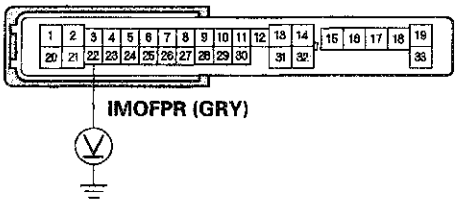

Wire side of female terminals

Is there battery voltage?

YES—Go to step 28.

NO—If needed, replace the driver's under-dash fuse/relay box (see page 22-84), then go to step 28.

28. Turn the ignition switch to LOCK (0).

29. Remove the rear seat cushion (see page 20-225).

30. Remove the access panel from the floor (see page 11-347).

31. Turn the ignition switch to ON (II), and measure the voltage between fuel tank unit 4P connector terminal No. 2 and body ground within 2 seconds.

FUEL TANK UNIT 4P CONNECTOR

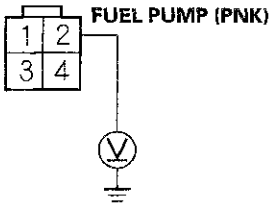

Wire side of female terminals

Is there battery voltage?

YES—Go to step 36.

NO—Go to step 32.

32. Turn the ignition switch to LOCK (0).

33. Remove PGM-FI main relay 2 (FUEL PUMP).

34. Connect PGM-FI main relay 2 (FUEL PUMP) 4P connector terminals No. 1 and No. 2 with a jumper wire.

PGM-FI MAIN RELAY 2 (FUEL PUMP) 4P CONNECTOR

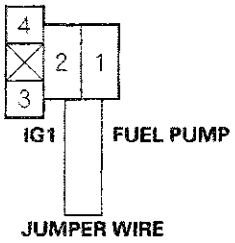

Terminal side of female terminals

35. Turn the ignition switch to ON (II), and measure the voltage between fuel tank unit 4P connector terminal No. 2 and body ground.

FUEL TANK UNIT 4P CONNECTOR

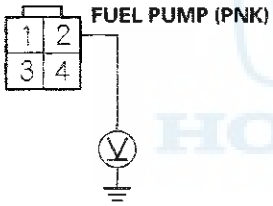

Wire side of female terminals

Is there battery voltage?

YES—Replace PGM-FI main relay 2 (FUEL PUMP). ■

NO—
- Repair open in the wire between the driver's under-dash fuse/relay box (D10) and the fuel tank unit 4P connector. ■
- If the wire is OK, replace the driver's under-dash fuse/relay box (see page 22-84). ■

36. Turn the ignition switch to LOCK (0).

37. Check for continuity between fuel tank unit 4P connector terminal No. 4 and body ground.

FUEL TANK UNIT 4P CONNECTOR

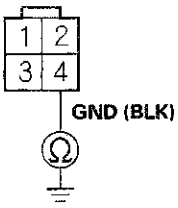

Wire side of female terminals

Is there continuity?

YES—Replace the fuel pump (see page 11-351). ■

NO—Repair open in the wire between the fuel tank unit 4P connector and G603; 4-door (see page 22-50), 2-door (see page 22-52). ■

Fuel Pressure Relieving

Before disconnecting fuel lines or hoses, relieve pressure from the system by disabling the fuel pump, running the engine until it stalls, then and disconnecting the fuel line/quick connect fitting in the engine compartment.

With the HDS

1. Connect the HDS to the data link connector (DLC) (A) located under the driver's side of the dashboard.

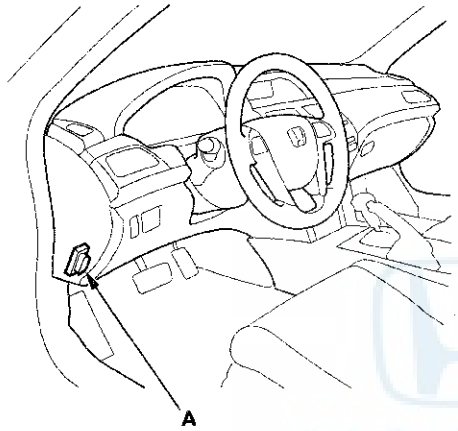

2. Turn the ignition switch to ON (II).
3. Make sure the HDS communicates with the ECM/PCM. If it doesn't, go to the DLC circuit troubleshooting (see page 11-192).
4. Turn the ignition switch to LOCK (0).
5. Remove the fuel fill cap to relieve the pressure in the fuel tank.
6. Turn the ignition switch to ON (II).
7. From the INSPECTION MENU of the HDS, select Fuel Pump OFF, then start the engine, and let it idle until it stalls.

   NOTE:
   - Do not allow the engine to idle above 1,000 rpm or the ECM/PCM will continue to operate the fuel pump.
   - A DTC or a Temporary DTC may be set during this procedure. Check for DTCs, and clear them as needed (see page 11-4).
8. Turn the ignition switch to LOCK (0).
9. Do the battery terminal disconnection procedure (see page 22-89).
10. Remove the quick-connect fitting cover (A) (see page 11-340).

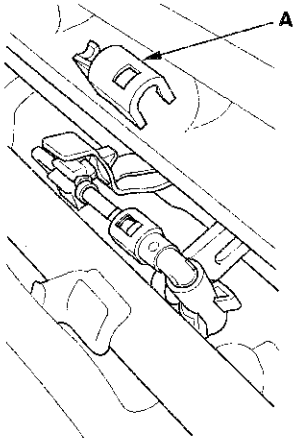

11. Check the fuel quick-connect fitting for dirt, and clean it if needed.
12. Place a rag or shop towel over the quick-connect fitting (A).

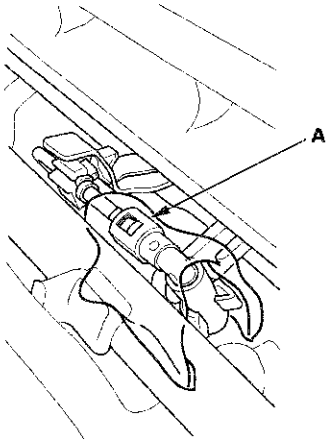

13. Disconnect the quick-connect fitting (A): Hold the connector (B) with one hand, and squeeze the retainer tabs (C) with the other hand to release them from the locking tabs (D). Pull the connector off.

    NOTE:
    - Be careful not to damage the line (E) or other parts.
    - Do not use tools.
    - If the connector does not move, keep the retainer tabs pressed down, and alternately pull and push the connector until it comes off easily.
    - Do not remove the retainer from the line; once removed, the retainer must be replaced with a new one.

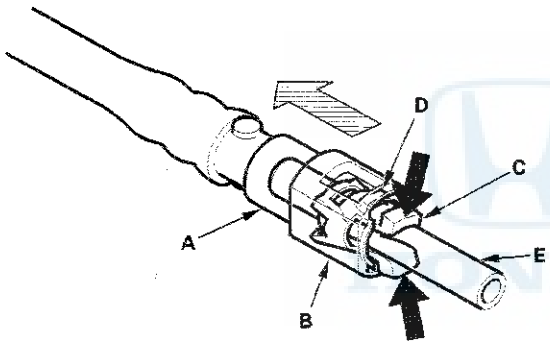

14. After disconnecting the quick-connect fitting, check it for dirt or damage (see step 5 on page 11-342).

15. Do the battery terminal reconnection procedure (see page 22-89).

Without the HDS

1. Remove the driver's dashboard lower cover (see page 20-153).

2. Remove PGM-FI main relay 2 (FUEL PUMP) (A) from the driver's under-dash fuse/relay box.

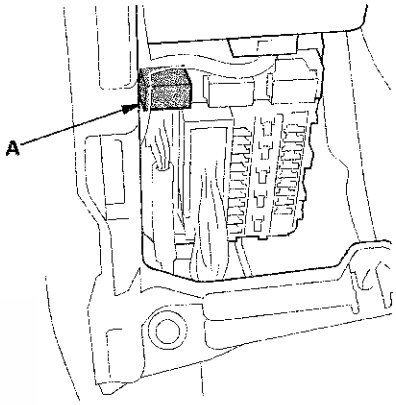

3. Start the engine, and let it idle until it stalls.

   NOTE: If any DTCs are stored, clear and ignore them.

4. Turn the ignition switch to LOCK (0).

5. Remove the fuel fill cap to relieve the pressure in the fuel tank.

6. Do the battery terminal disconnection procedure (see page 22-89).

(cont'd)

Fuel Pressure Relieving (cont'd)

7. Remove the quick-connect fitting cover (A) (see page 11-340).

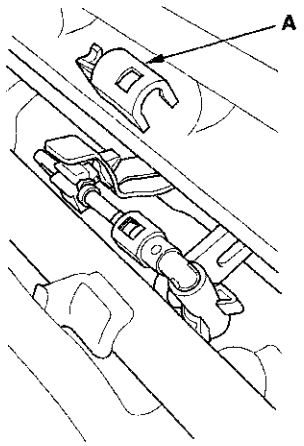

8. Check the fuel quick-connect fitting for dirt, and clean it if needed.

9. Place a rag or shop towel over the quick-connect fitting (A).

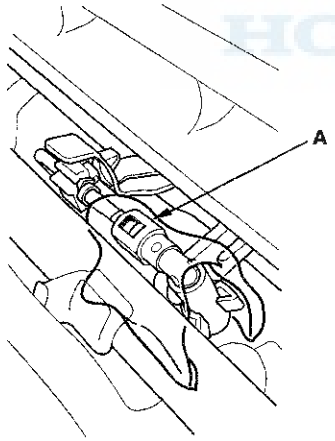

10. Disconnect the quick-connect fitting (A): Hold the connector (B) with one hand, and squeeze the retainer tabs (C) with the other hand to release them from the locking tabs (D). Pull the connector off.

NOTE:
- Be careful not to damage the line (E) or other parts.
- Do not use tools.
- If the connector does not move, keep the retainer tabs pressed down, and alternately pull and push the connector until it comes off easily.
- Do not remove the retainer from the line; once removed, the retainer must be replaced with a new one.

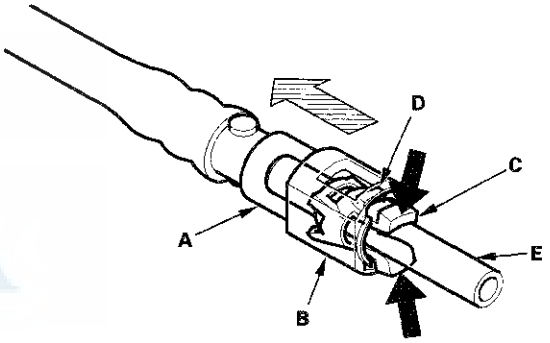

11. After disconnecting the quick-connect fitting, check it for dirt or damage (see step 5 on page 11-342).

12. Do the battery terminal reconnection procedure (see page 22-89).

Fuel Pressure Test

Special Tools Required
- Fuel pressure gauge 07406-004000B
- Fuel pressure gauge attachment set 07AAJ-S6MA150

1. Relieve the fuel pressure (see page 11-332).

2. Attach the fuel pressure gauge set and the fuel pressure gauge.

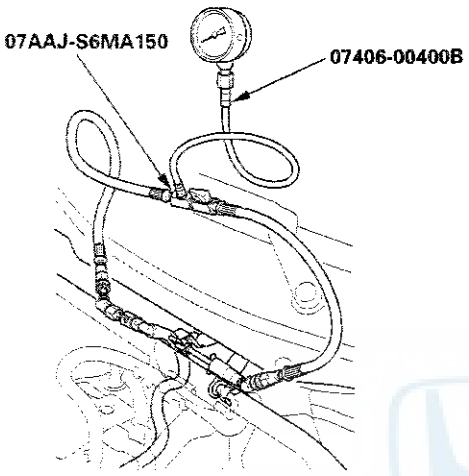

3. Start the engine, and let it idle.

   - If the engine starts, go to step 5.
   - If the engine does not start, go to step 4.

4. Check to see if the fuel pump is running: Listen to the fuel filler port with the fuel fill cap removed. The fuel pump should run for 2 seconds when the ignition switch is first turned on.

   - If the pump runs, go to step 5.
   - If the pump does not run, do the fuel pump circuit troubleshooting (see page 11-326).

5. Read the fuel pressure gauge. The pressure should be 330—380 kPa (3.4—3.9 kgf/cm^2, 48—55 psi).

   - If the pressure is OK, the test is complete.
   - If the pressure is out of specification, replace the fuel pressure regulator (see page 11-350) and the fuel filter (see page 11-350), then recheck the fuel pressure.

Fuel Tank Draining

1. Remove the fuel tank unit (see page 11-347).

2. Using a hand pump, a hose, and a container suitable for fuel, draw the fuel from the fuel tank.

3. Reinstall the fuel tank unit (see page 11-348).

Fuel Line Inspection

Check the fuel system lines and hoses for damage, leaks, and deterioration. Replace any damaged parts.

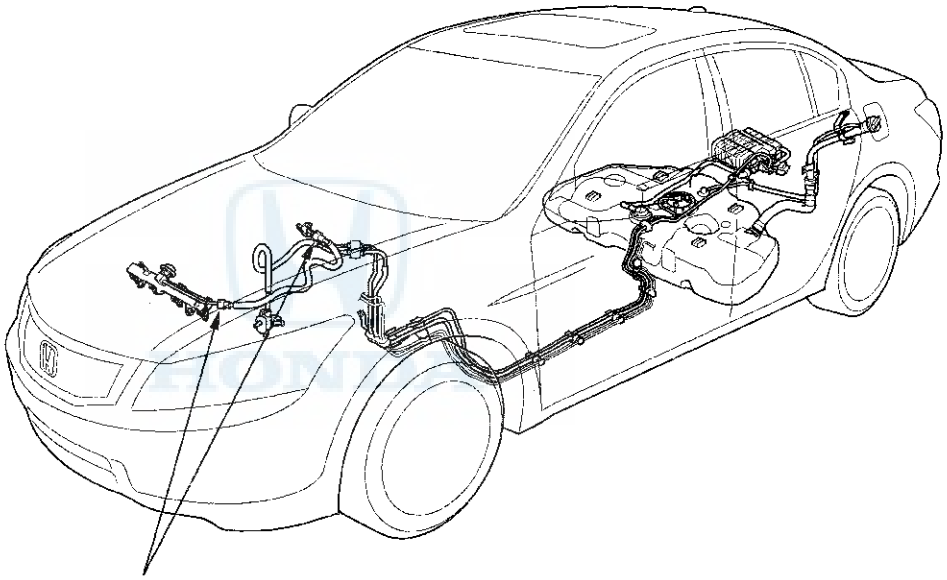

Make sure the connections are secure and the quick-connect fitting covers are firmly locked in place.

Check all clamps, and make sure they are properly positioned and tightened.

All models except PZEV

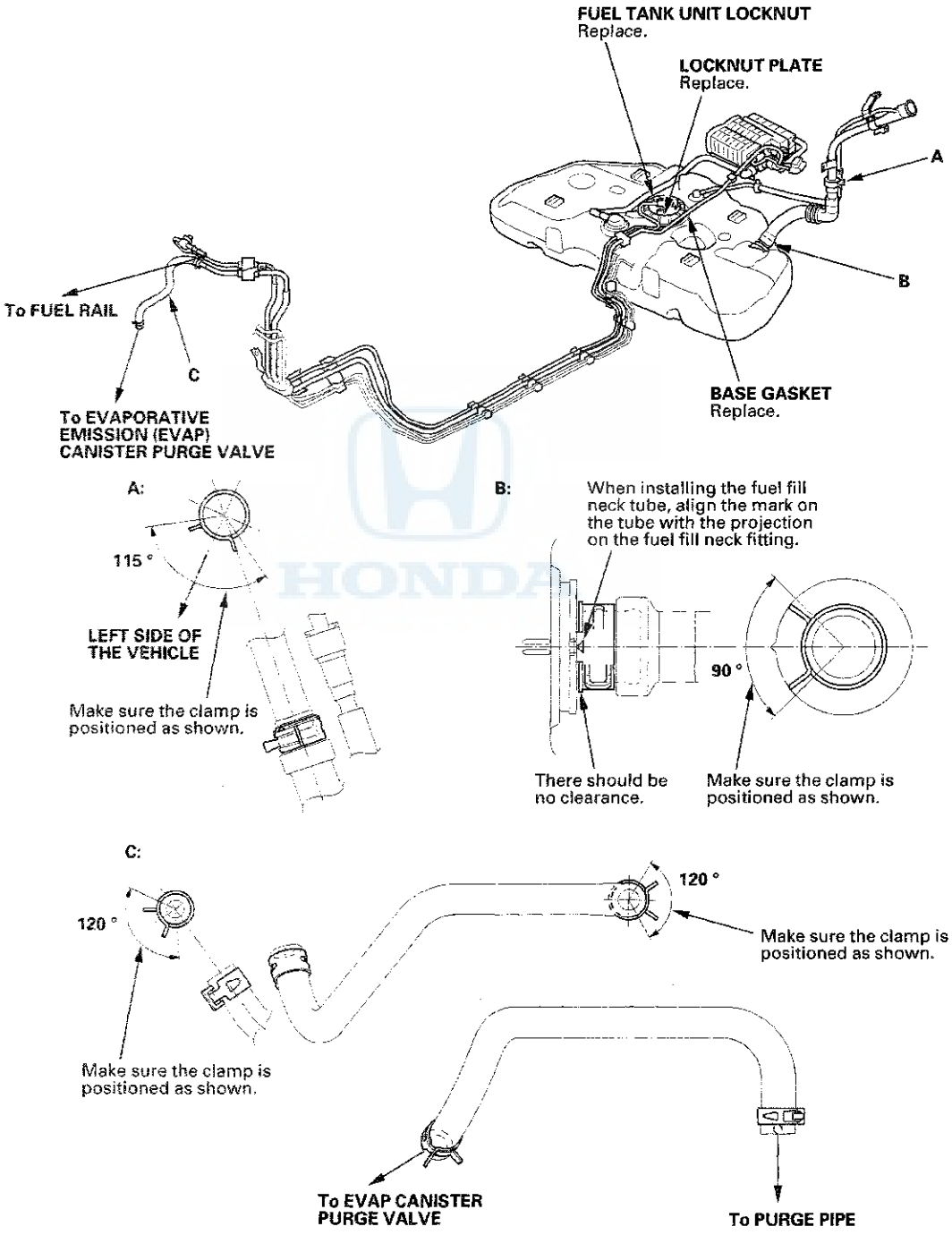

(cont'd)

Fuel Line Inspection (cont'd)

Check all clamps, and make sure they are properly positioned and tightened.

PZEV model

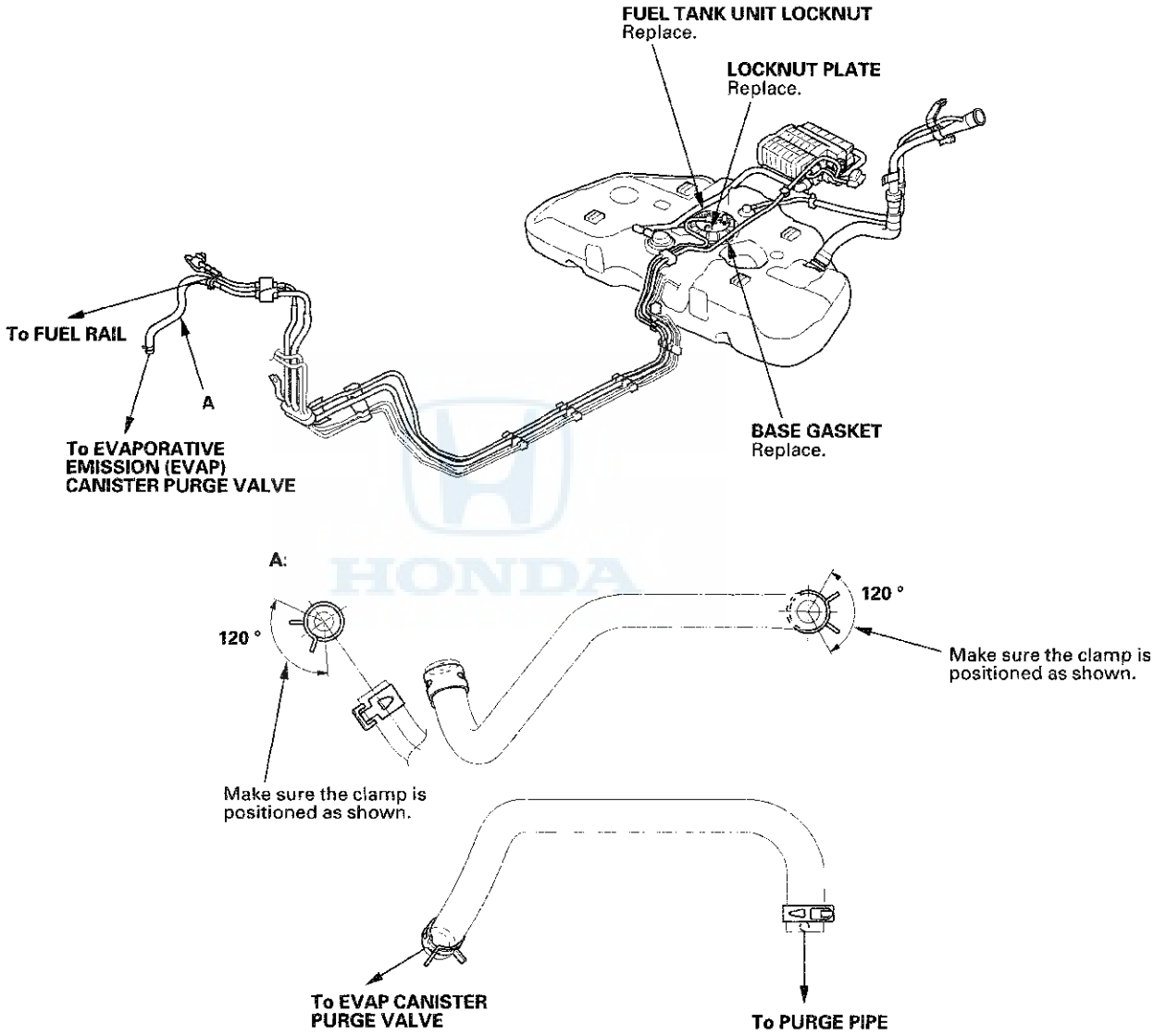

Fuel Line/Quick-Connect Fitting Precautions

The fuel line/quick-connect fittings (A), (B), (C), (D), (E), and (F) connect the fuel rail (G) to the fuel feed hose (H), the fuel feed hose to the fuel line (I), the fuel line (J) to the fuel tank unit (K), the fuel vapor line (L) to the EVAP canister (M), and the fuel tank vapor recirculation tube (N) (PZEV model, and fuel fill neck tube (O) to the fuel fill pipe (P)). When removing or installing the fuel feed hose, the fuel tank unit, or the fuel tank, it is necessary to disconnect or connect the quick-connect fittings. Pay attention to the following:

- The fuel feed hoses, fuel line, and quick-connect fittings are not heat-resistant; be careful not to damage them during welding or other heat-generating procedures.
- The fuel feed hoses, fuel line, and quick-connect fittings are not acid-proof; do not touch them with a shop towel that was used for wiping battery electrolyte. Replace them if they come in contact with electrolyte or something similar.
- When connecting or disconnecting the fuel feed hoses, fuel line, and quick-connect fittings, be careful not to bend or twist them excessively. Replace them if they are damaged.

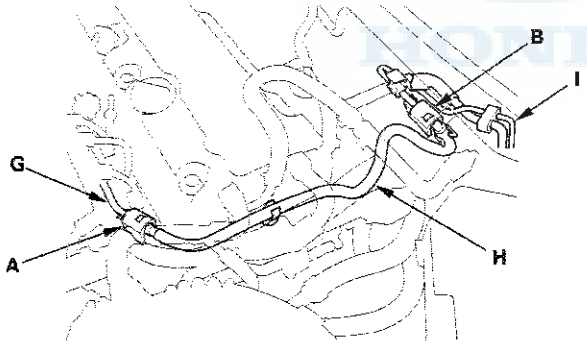

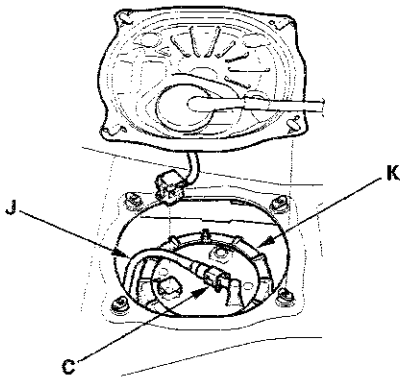

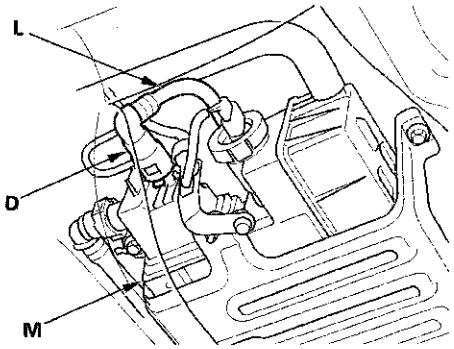

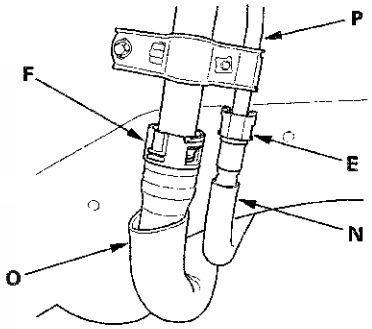

PZEV model shown

(cont'd)

Fuel Line/Quick-Connect Fitting Precautions (cont'd)

A disconnected quick-connect fitting can be reconnected, but the retainer on the mating line cannot be reused once it has been removed from the line. Replace the retainer when:

- replacing the fuel rail.
- replacing the fuel line.
- replacing the fuel pump.
- replacing the fuel filter.
- replacing the EVAP canister.
- replacing the fuel fill pipe.
- replacing the fuel tank.
- it has been removed from the line.
- it is damaged.

Use the same manufacturer retainer and the same size retainer when the replacing the retainer.

Location	Manufacturer	Retainer color	Line diameter
A	Tokai	Blue green	0.3 in. (8 mm)
B	Tokai	Green	0.2 in. (6.3 mm)
C	Sanoh	White	0.4 in. (9.5 mm)
D	Sanoh	White	0.5 in. (12 mm)
E	Tokai	Natural	0.5 in. (12 mm)
F (PZEV model)	Tokai	Green	1.1 in. (28.6 mm)

Fuel Line/Quick-Connect Fitting Removal

NOTE: Before you work on the fuel lines and fittings, read the Fuel Line/Quick-Connect Fitting Precautions (see page 11-339).

1. If equipped, remove the quick-connect fitting cover from the fuel line. Raise the cover (A) from the fuel line (B), and remove it as shown.

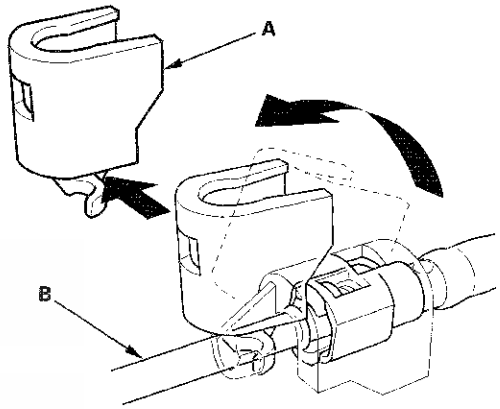

2. Relieve the fuel pressure (see page 11-332).
3. Check the fuel quick-connect fittings (A) for dirt, and clean them if needed.

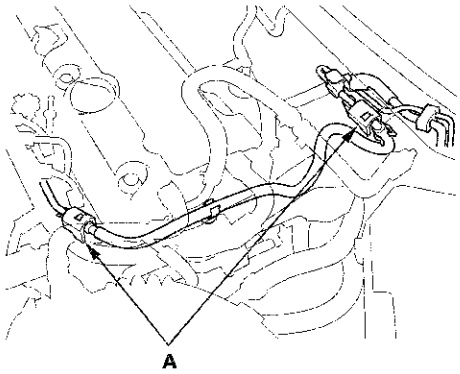

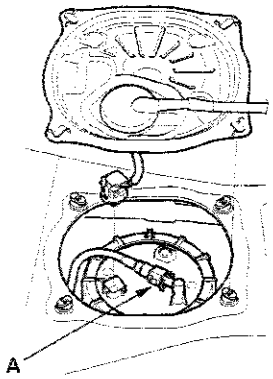

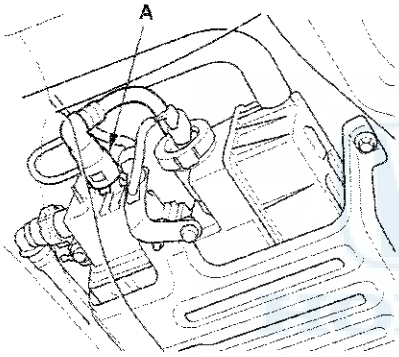

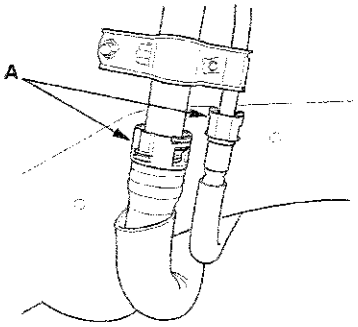

PZEV model shown

4. Place a rag or shop towel over the quick-connect fitting. Hold the connector (A) with one hand, and squeeze the retainer tabs (B) with the other hand to release them from the locking tabs (C). Pull the connector off.

   NOTE:
   - Be careful not to damage the line (D) or other parts. Do not use tools.
   - If the connector does not move, keep the retainer tabs pressed down, and alternately pull and push the connector until it comes off easily.
   - Do not remove the retainer from the line; once removed, the retainer must be replaced with a new one.

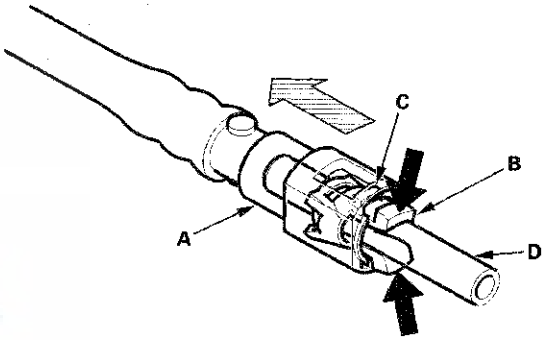

(cont'd)

Fuel Line/Quick-Connect Fitting Removal (cont'd)

5. Check the contact area (A) of the line (B) for dirt or damage.

   - If it is dirty, clean the connector with a pressure washer, and dry it with the compressed air.
   - If it is rusty or damaged, replace the fuel filter or the fuel feed line.

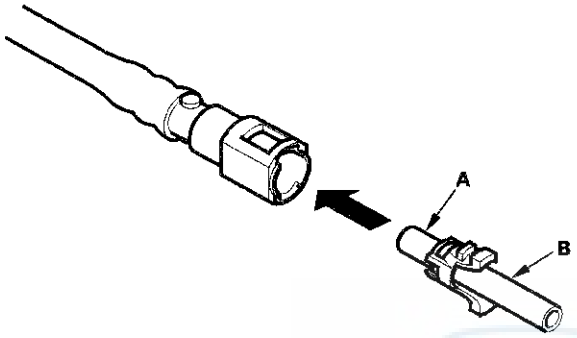

6. To prevent damage and keep foreign matter out, cover the disconnected connector and line ends with plastic bags (A).

   NOTE: The retainer cannot be reused once it has been removed from the line.
   Replace the retainer when:
   - replacing the fuel rail.
   - replacing the fuel line.
   - replacing the fuel pump.
   - replacing the fuel filter.
   - replacing the EVAP canister.
   - replacing the fuel fill pipe.
   - replacing the fuel tank.
   - it has been removed from the line.
   - it is damaged.

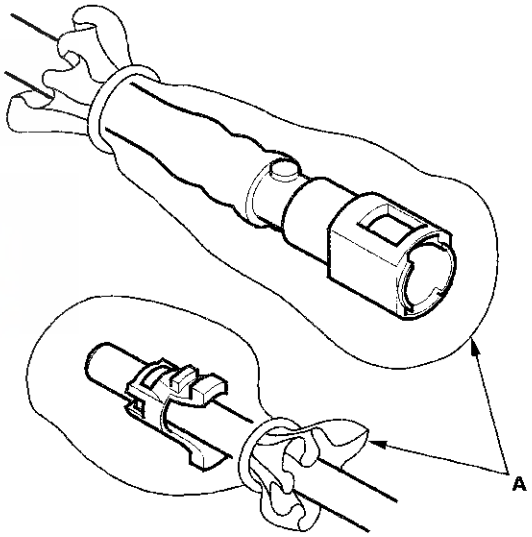

Fuel Line/Quick-Connect Fitting Installation

NOTE: Before you work on the fuel lines and fittings, read the Fuel Line/Quick-Connect Fitting Precautions (see page 11-339).

1. Check the contact area (A) of the line (B) for dirt or damage, and clean it if needed.

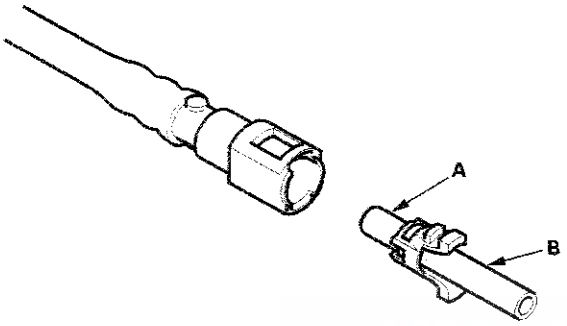

2. Insert a new retainer (A) into the connector (B) if the retainer is damaged, or after:

   - replacing the fuel rail.
   - replacing the fuel line.
   - replacing the fuel pump.
   - replacing the fuel filter.
   - replacing the EVAP canister.
   - replacing the fuel fill pipe.
   - replacing the fuel tank.
   - removing the retainer from the line.

   NOTE: When you replace a retainer, use the same size and manufacturer as the original retainer (see page 11-340).

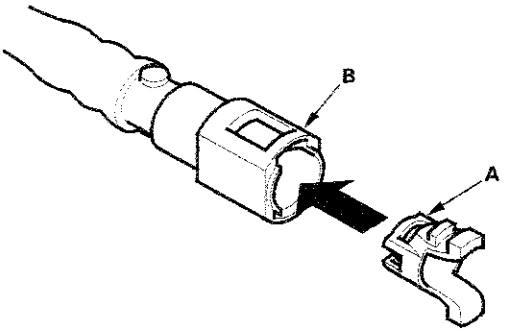

3. Before connecting a new fuel tube/quick-connect fitting assembly (A), remove the old retainer (B) from the mating line.

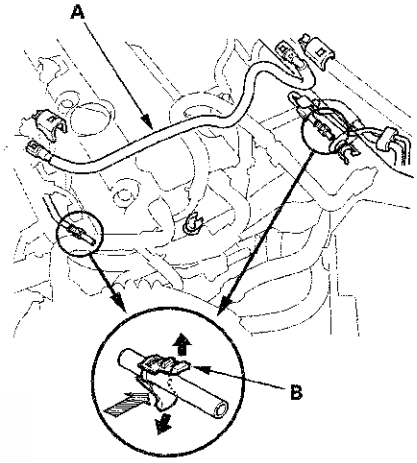

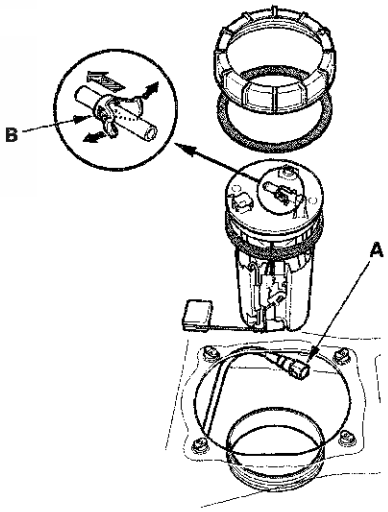

(cont'd)

Fuel Line/Quick-Connect Fitting Installation (cont'd)

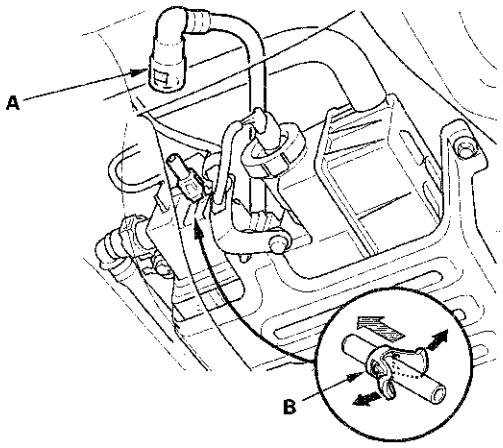

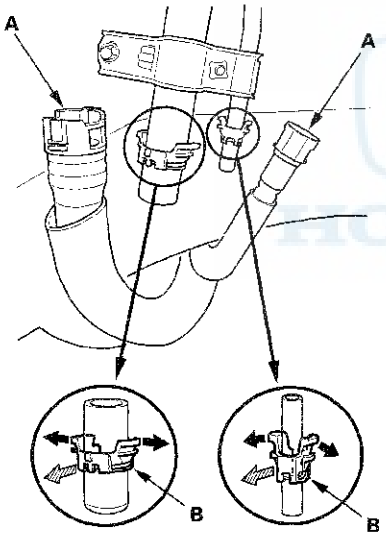

PZEV model shown

4. Align the quick-connect fittings with the line (A), and align the retainer locking tabs (B) with the connector grooves (C). Then press the quick-connect fittings onto the line until both retainer tabs lock with a clicking sound.

   NOTE: If it is hard to connect, put a small amount of new engine oil on the line end.

Connection with new retainer

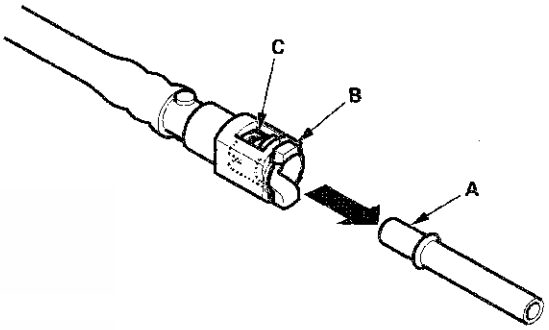

Connection with new retainer:
Fuel fill neck tube (PZEV model)

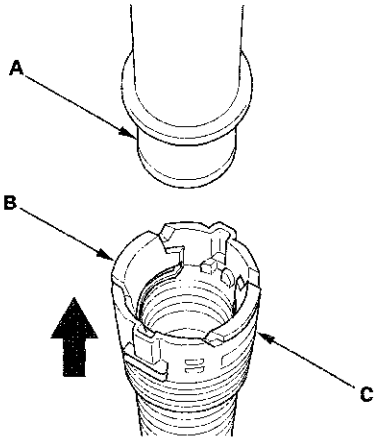

Connection to new fuel line

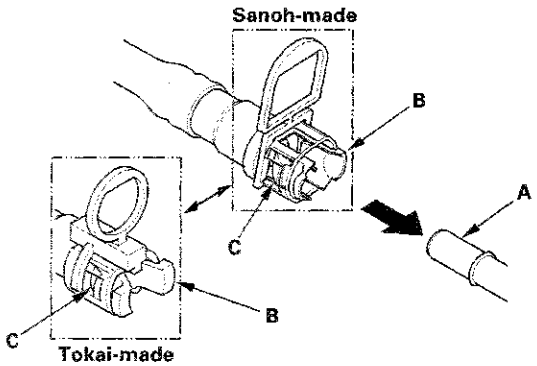

Connection to new fuel line:
Fuel fill neck tube (PZEV model)

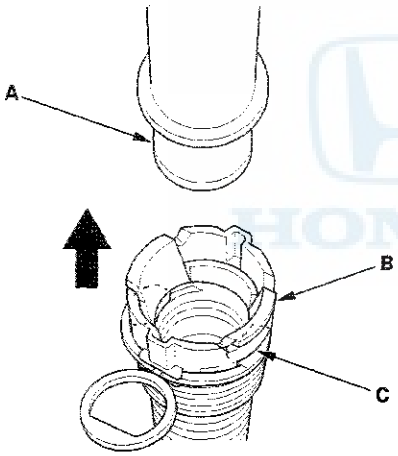

Reconnection to existing retainer

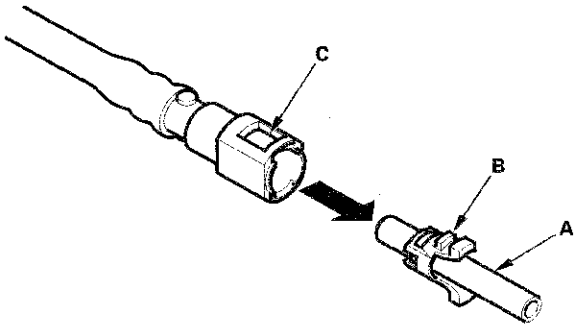

Reconnection to existing retainer:
Fuel fill neck tube (PZEV model)

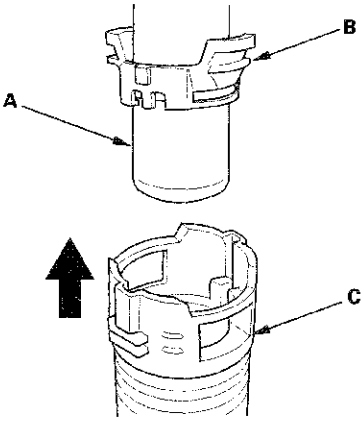

(cont'd)

Fuel Line/Quick-Connect Fitting Installation (cont'd)

5. When you reconnect the connector with the old retainer, make sure the connection is secure and the tabs (A) are firmly locked into place; check visually and also by pulling the connector (B). When you replace the fuel line with a new one, make sure you remove the ring pull (C) upwards after you confirm the connection is secure.

   NOTE: Before you remove the ring pull, make sure the fuel line connection is secure. If the connection is not secure, the ring pull could break when you try to remove it.

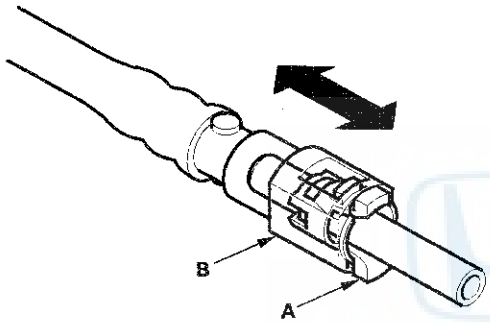

Connection to new fuel line

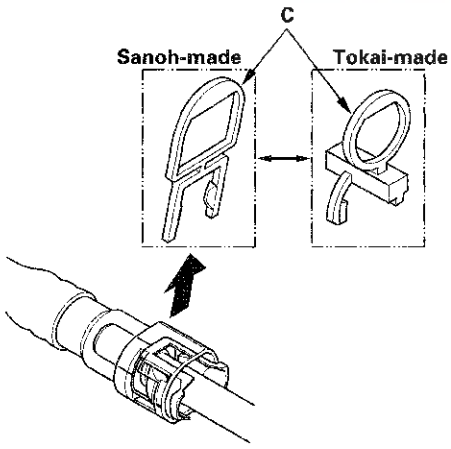

6. Reconnect the negative cable to the battery, and turn the ignition switch to ON (II) (but do not operate the starter motor). The fuel pump will run for about 2 seconds, and fuel pressure will rise. Repeat this two or three times, then check for fuel leaks.

7. If equipped, install the quick-connect fitting cover. Set the groove of the cover (A) on the fuel line (B) as shown, then install it. Make sure the cover is firmly locked in place.

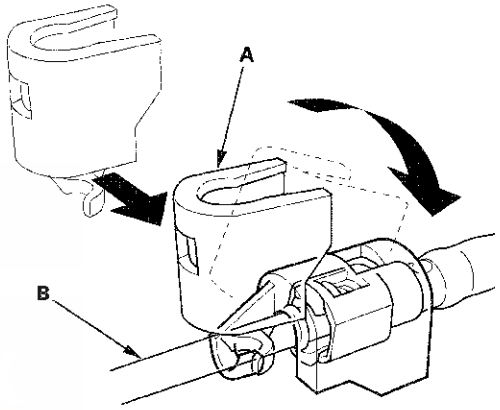

Fuel Tank Unit Removal and Installation

Special Tools Required
Fuel sender wrench 07AAA-S0XA100

Removal

1. Relieve the fuel pressure (see page 11-332).
2. Remove the fuel fill cap.
3. Remove the rear seat cushion (see page 20-225).
4. Remove the access panel (A) from the floor.

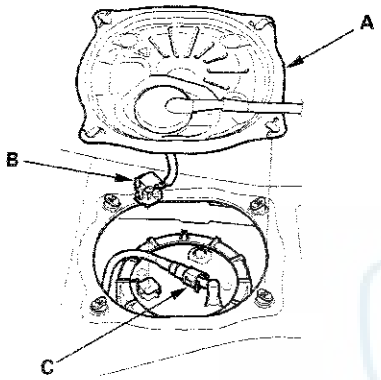

5. Disconnect the fuel tank unit 4P connector (B).
6. Disconnect the quick-connect fitting (C) from the fuel tank unit.
7. Using the special tool, loosen the locknut (A).

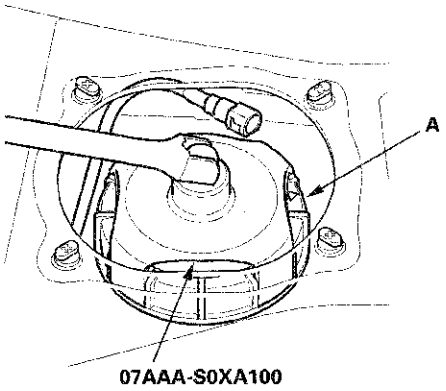

8. Remove the locknut (A) and the fuel tank unit (B).

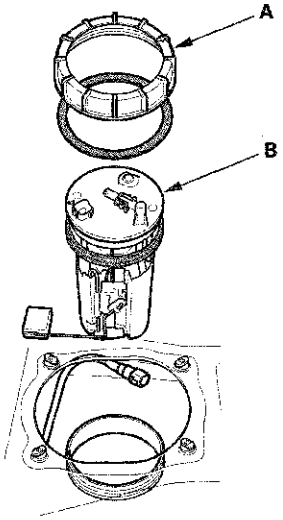

(cont'd)

Fuel Tank Unit Removal and Installation (cont'd)

Installation

1. Temporarily attach a new base gasket (A) to the fuel tank unit (B), then insert the fuel tank unit partially into the fuel tank.

   NOTE:
   - Be careful not to damage the new base gasket.
   - Be careful not to bend the fuel gauge sending unit.
   - Do not coat the base gasket with oil.

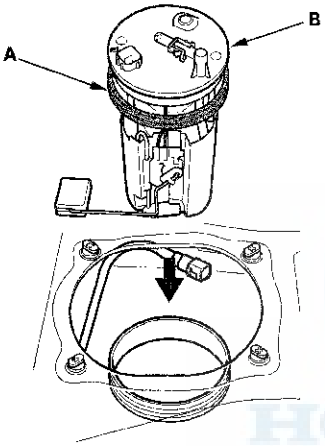

2. Transfer the base gasket (A) from the fuel tank unit to the fuel tank.

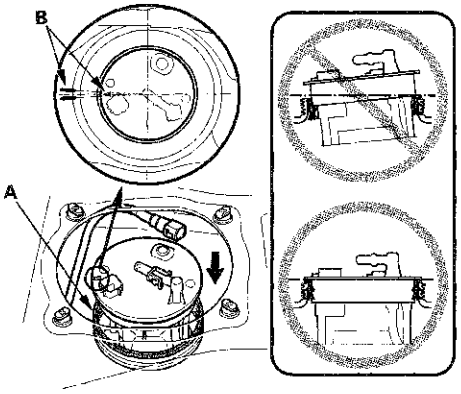

3. Align the marks (B) on the fuel tank and fuel tank unit, then insert the fuel tank unit into the fuel tank until the fuel tank unit rests on top of the base gasket.

   NOTE: To avoid a fuel leak, check the base gasket, visually or by hand, to make sure it is not pinched.

4. Using the special tool, tighten a new locknut (A) with a new locknut plate (B) to the specified torque.

   NOTE:
   - After tightening, make sure the marks are still aligned.
   - After installation, check the base gasket, visually or by hand, to make sure it is not pinched.

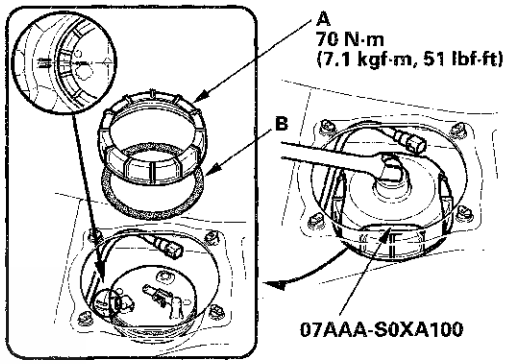

5. Connect the fuel tank unit 4P connector, then connect the quick-connect fitting.

6. Reconnect the negative cable to the battery, and turn the ignition switch to ON (II) (but do not operate the starter motor). The fuel pump will run for about 2 seconds, and fuel pressure rises. Repeat this two or three times, then check for fuel leaks.

7. Install the access panel.

8. Install the rear seat cushion (see page 20-225).

9. Install the fuel fill cap.

Fuel Pulsation Damper Replacement

PZEV model

1. Relieve the fuel pressure (see page 11-332).
2. Remove the engine cover.
3. Place a wrench (A) on the fuel rail (B).

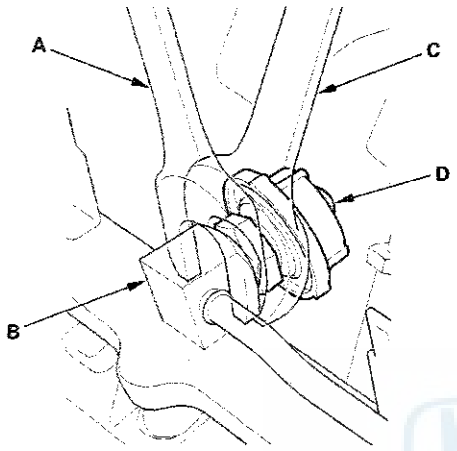

4. Place a wrench (C) on the fuel pulsation damper (D), and loosen it.
5. Remove the fuel pulsation damper (A) from the fuel rail (B).

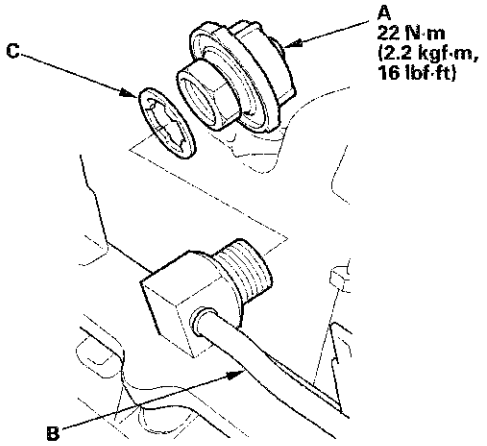

6. Install the parts in the reverse order of removal with a new sealing washer (C).
7. Turn the ignition switch to ON (II), but do not operate the starter motor. After the fuel pump runs for about 2 seconds, the fuel rail will be pressurized. Repeat this two or three times, then check for fuel leakage.

Fuel Pressure Regulator Replacement

1. Remove the fuel tank unit (see page 11-347).

2. Remove the reservoir (A).

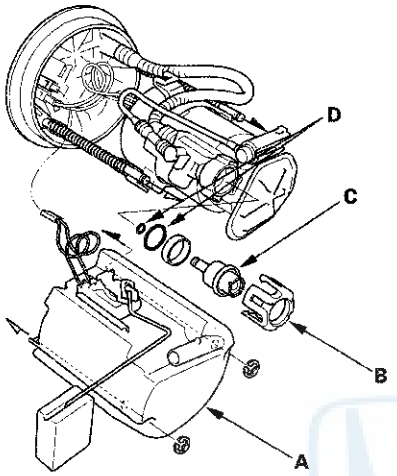

3. Remove the bracket (B).

4. Remove the fuel pressure regulator (C).

5. Install the parts in the reverse order of removal with new O-rings (D) and a new bracket. When installing the fuel tank unit, align the marks on the unit and the fuel tank (see page 11-348).

   NOTE:
   - Coat the O-rings with clean engine oil; do not use any other oils or fluids.
   - Do not pinch the O-rings during installation.
   - Use all the new parts supplied in the pressure regulator replacement kit.

Fuel Filter Replacement

The fuel filter should be replaced whenever the fuel pressure drops below the specified value (see page 11-335), after making sure that the fuel pump and the fuel pressure regulator are OK.

1. Remove the fuel tank unit (see page 11-347).

2. Remove the fuel filter set (A).

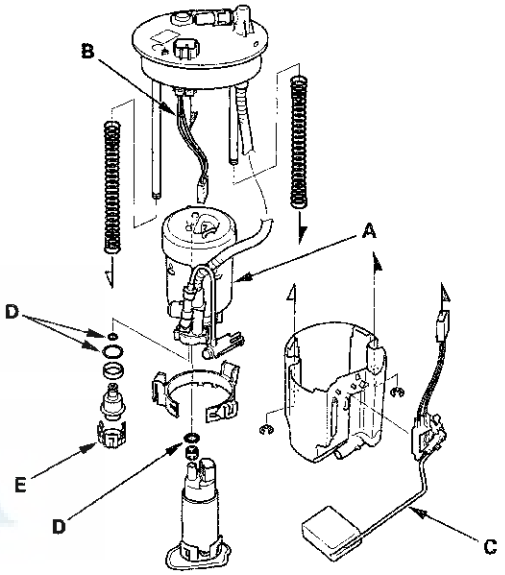

3. Check these items before installing the fuel tank unit:

   - When connecting the wire harness (B), make sure the connection is secure and the connectors are firmly locked into place.
   - When installing the fuel gauge sending unit (C), make sure the connection is secure and the connector is firmly locked into place. Be careful not to bend or twist it excessively.

4. Install the parts in the reverse order of removal with new O-rings (D) and a new bracket (E). When installing the fuel tank unit, align the marks on the unit and the fuel tank (see page 11-348).

   NOTE:
   - Coat the O-rings with clean engine oil; do not use any other oil or fluid.
   - Do not pinch the O-rings during installation.
   - Use all the new parts supplied in the fuel filter replacement kit.

Fuel Pump/Fuel Gauge Sending Unit Replacement

1. Remove the fuel tank unit (see page 11-347).

2. Remove the fuel level sensor (fuel gauge sending unit) (A) from the fuel tank unit (B).

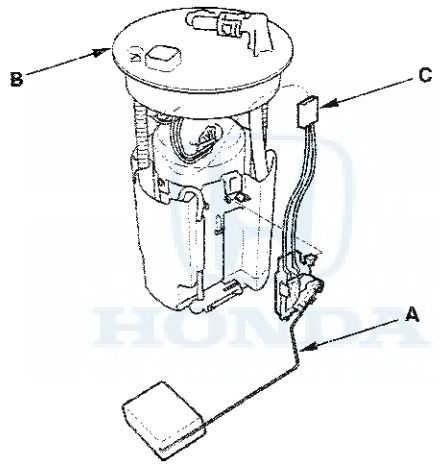

3. Check these items before installing the fuel tank unit:

   - When connecting the wire harness, make sure the connection is secure and the connector (C) is firmly locked into place.
   - When installing the fuel gauge sending unit, make sure the connection is secure. Be careful not to bend or twist it excessively.

4. Install the parts in the reverse order of removal. When installing the fuel tank unit, align the marks on the unit and the fuel tank (see page 11-348).

Fuel Tank Replacement

1. Drain the fuel tank (see page 11-335).

2. Reinstall the fuel tank unit without connecting the fuel tank unit 4P connector and the quick-connect fitting (see page 11-348).

3. Remove the fuel fill pipe cover (see page 11-354).

4. Disconnect the quick-connect fittings (A) (see page 11-340) (and on all models except PZEV, disconnect the fuel fill tube (B) from the fuel fill pipe).
   Slide back the clamps, then twist the hose as you pull to avoid damaging them.

All models except PZEV

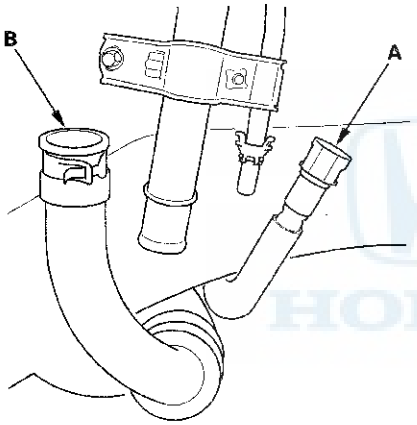

PZEV model

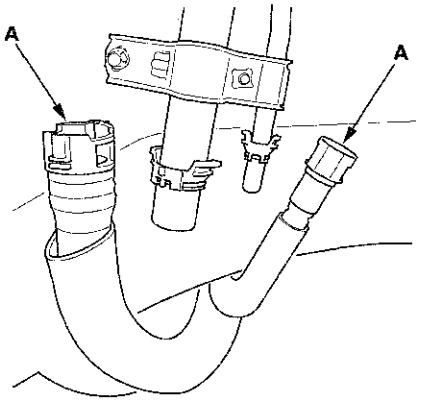

5. Raise the vehicle on a lift.

6. Disconnect the hose (A) from the EVAP canister.

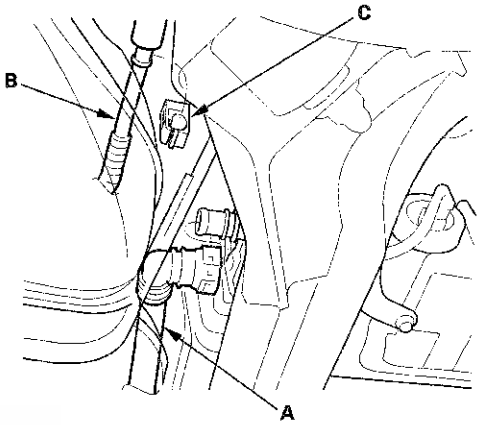

7. Remove the hose (B) from the clamp (C).

   NOTE: Be careful not to damage the hose.

8. Remove the exhaust pipe (see page 9-8).

9. Remove the right side middle floor undercover (see page 20-276).

10. Remove the fuel tank protector (A).

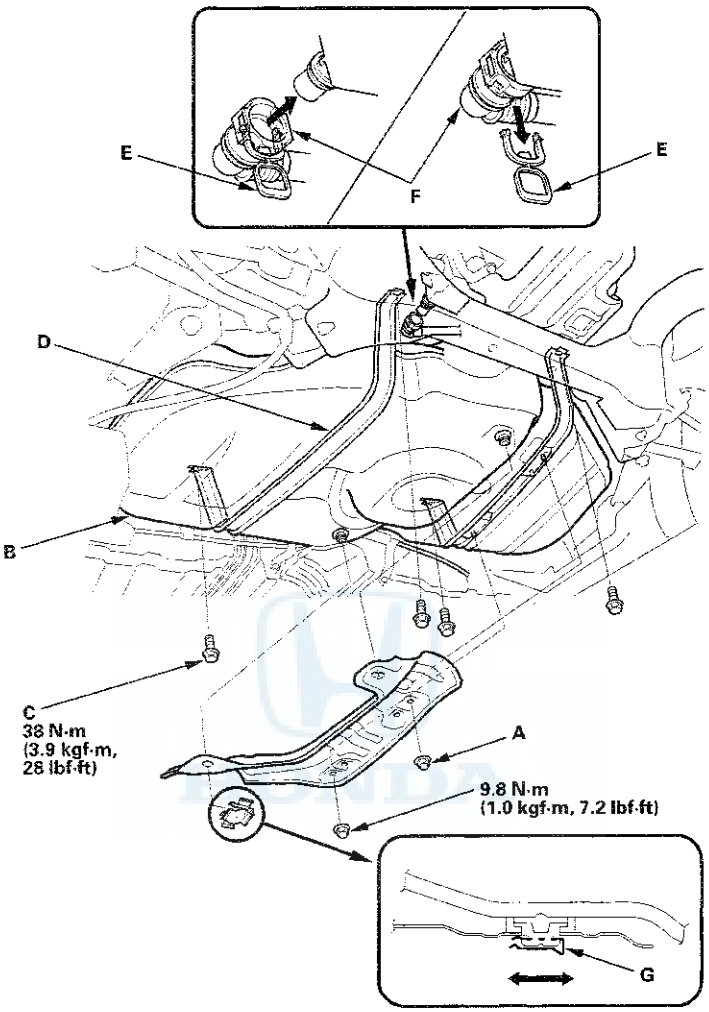

11. Remove the right parking brake cable mounting bolts (see page 19-41).

12. Place a jack or other support under the fuel tank (B).

13. Remove the strap bolts (C) and the straps (D).

14. Remove the fuel tank.

15. Install the parts in the reverse order of removal.

NOTE:
- New fuel tanks have a ring pull (E) at the fuel vapor hose connector (F). When you connect the hose and confirm that the connection is secure, remove the ring pull by pulling it down.
- Before connecting the fuel fill pipe and the quick-connect fitting, check for dirt, and clean them if needed, taking care not to damage the fuel fill pipe and other parts.
- When installing the fuel tank protector, make sure to insert it in the direction of the clip (G).

Fuel Fill Pipe Removal/Installation

1. Drain the fuel tank (see page 11-335).
2. Remove the fuel fill cap.
3. Remove the left rear wheel.
4. Remove the fuel fill pipe cover (A).

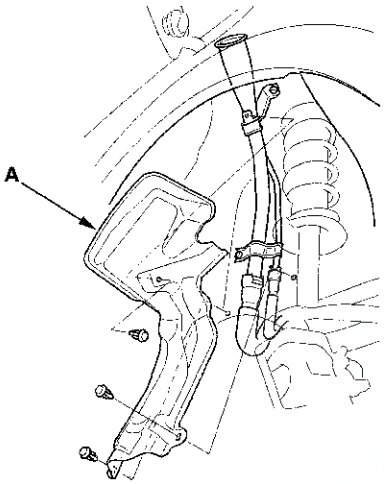

5. Disconnect the quick-connect fittings (A) (see page 11-340) (and on all models except PZEV, disconnect the fuel fill tube (B) from the fuel fill pipe. Slide back the clamp, then twist the hose as you pull to avoid damaging them).

All models except PZEV

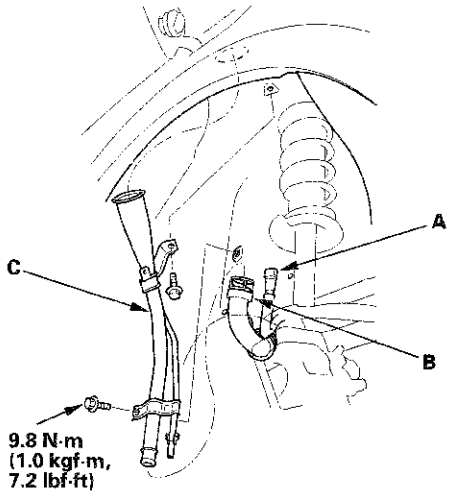

PZEV model

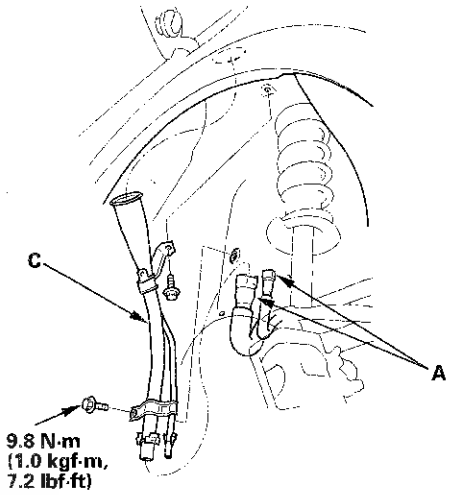

6. Remove the fuel fill pipe (C).
7. Install the parts in the reverse order of removal.

   NOTE: Before connecting the fuel fill pipe and quick-connect fitting, check for dirt, and clean it if needed, taking care not to damage the fuel fill pipe and other parts.

8. After installing the parts, measure the clearance (A) between the fuel filler pipe cover (B) and the left rear damper spring outline (C) at a point 5.9 in. (150 mm) to 8.2 in. (210 mm) from the left rear damper spring base (D). Make sure the clearance (A) is more than 0.81 in. (20.7 mm).

   NOTE: To measure the clearance, raise the vehicle on the lift.

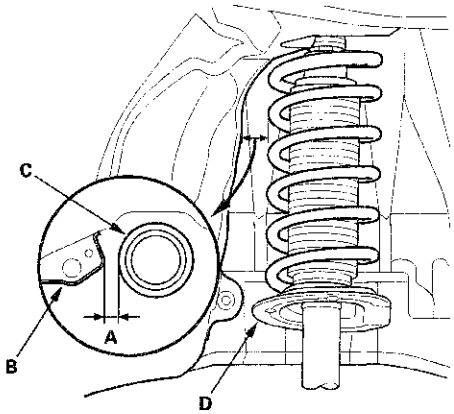

Fuel Gauge Sending Unit Test

NOTE: For the fuel gauge system circuit diagram, refer to the Gauges Circuit Diagram (see page 22-308).

1. Check the No. 5 METER (7.5 A) fuse in the driver's under-dash fuse/relay box before testing.

2. Check for body electrical system DTCs.

   - If no problem is found, go to step 3.
   - If DTC B1175 or B1176 is indicated, go to the indicated DTC's troubleshooting.

3. Turn the ignition switch to LOCK (0).

4. Remove the rear seat cushion (see page 20-225).

5. Remove the access panel (A) from the floor.

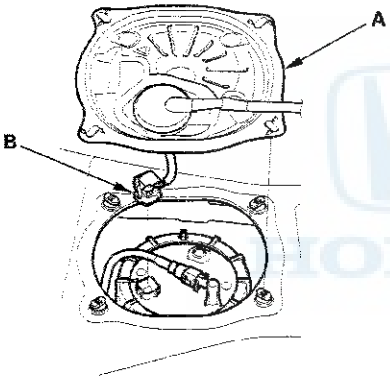

6. Disconnect the fuel tank unit 4P connector (B).

7. Measure the voltage between fuel tank unit 4P connector terminals No. 1 and No. 3 with the ignition switch to ON (II). There should be battery voltage.

   - If the voltage is OK, go to step 8.
   - If the voltage is not as specified, check for:
     - a short in the PUR wire to ground.
     - an open in the PUR or ORN wire.

FUEL TANK UNIT 4P CONNECTOR

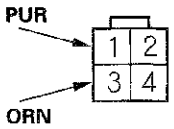

Wire side of female terminals

8. Turn the ignition switch to LOCK (0).

9. Remove the fuel tank unit from the fuel tank (see page 11-347).

(cont'd)

Fuel Gauge Sending Unit Test (cont'd)

10. Measure the resistance between fuel tank unit 4P connector terminals No. 1 and No. 3 with the float at E (EMPTY), LOW (LOW FUEL INDICATOR), 1/2 (HALF FULL), and F (FULL) positions.
    If you do not get the following readings, replace the fuel gauge sending unit (see page 11-351).

Float Position	F 6.1 in. (155.2 mm)	1/2 3.8 in. (97.6 mm)	LOW 1.6 in. (40.8 mm)	E 0.6 in. (15.9 mm)
Resistance (Ω)	19 to 21	196.7 to 206.7	503.8 to 589.4	772 to 788

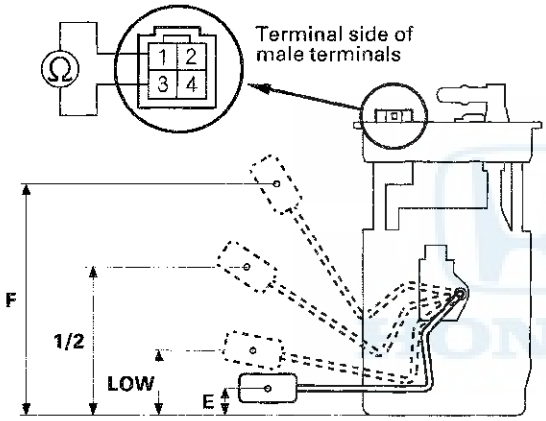

11. Reconnect the fuel tank unit 4P connector.

12. Remove the No. 15 BACK UP (10 A) fuse from the under-hood fuse/relay box for at least 10 seconds, then reinstall it.

13. Turn the ignition switch to ON (II).

14. Check that the pointer of the fuel gauge indicates F with the float at F.

    - If the pointer of the fuel gauge does not indicate F, replace the gauge assembly.
    - If the gauge is OK, the test is complete.

    NOTE:
    - The pointer of the fuel gauge returns to the bottom of the gauge dial when the ignition switch is in LOCK (0) and ACC (I), regardless of the fuel level.
    - Remove the No. 15 BACK UP (10 A) fuse from the under-hood fuse/relay box for at least 10 seconds after completing troubleshooting, otherwise it may take up to 20 minutes for the fuel gauge to indicate the correct fuel level.

Low Fuel Indicator Test

1. Do the gauge self-diagnostic test (see page 22-304).

    - If the low fuel indicator flashes, go to step 2.
    - If the low fuel indicator does not flash, replace the gauge control module (see page 22-324).

2. Check for body electrical system DTCs.

    - If any DTCs are indicated, do the indicated DTC's troubleshooting.
    - If no DTCs are indicated, go to step 3.

3. Do the fuel gauge sending unit test (see page 11-355).

Component Location Index

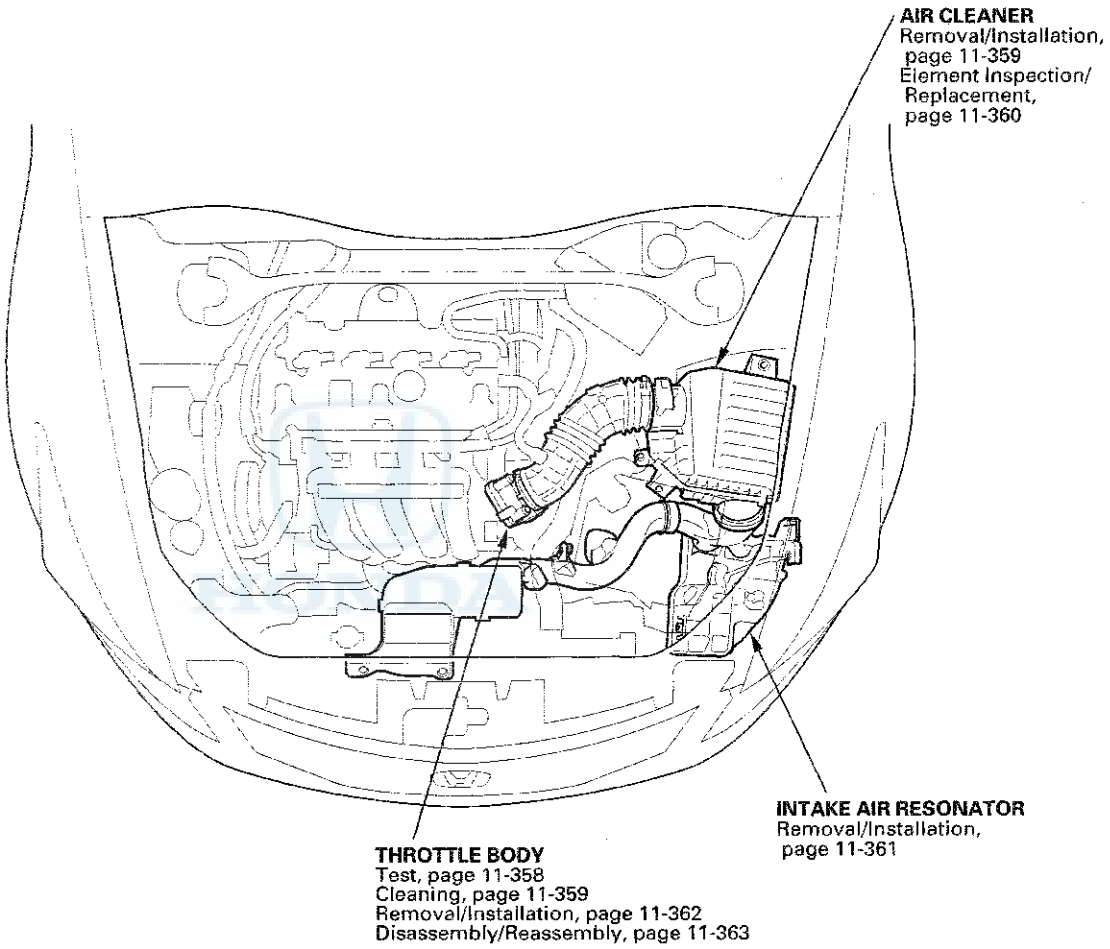

Throttle Body Test

Carbon Accumulation Check

NOTE: If the malfunction indicator lamp (MIL) has been reported on, check for diagnostic trouble codes (DTCs).

1. Connect the HDS to the data link connector (DLC) (A) located under the driver's side of the dashboard.

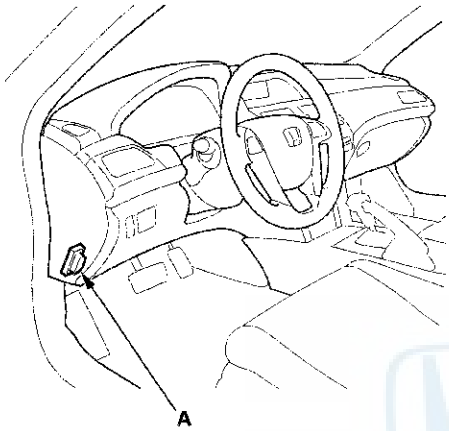

2. Turn the ignition switch to ON (II).
3. Make sure the HDS communicates with the ECM/PCM. If it doesn't, go to the DLC circuit troubleshooting (see page 11-192).
4. Start the engine. Hold the engine speed at 3,000 rpm without load (A/T in P or N, M/T in neutral) until the radiator fan comes on, then let it idle.
5. Check the REL TP SENSOR in the DATA LIST with the HDS. The reading should be below 2.46 deg. If it is not, clean the throttle body (see page 11-359).

Throttle Position Learning Check

NOTE: If the malfunction indicator lamp (MIL) has been reported on, check for diagnostic trouble codes (DTCs).

1. Connect the HDS to the data link connector (DLC) (A) located under the driver's side of the dashboard.

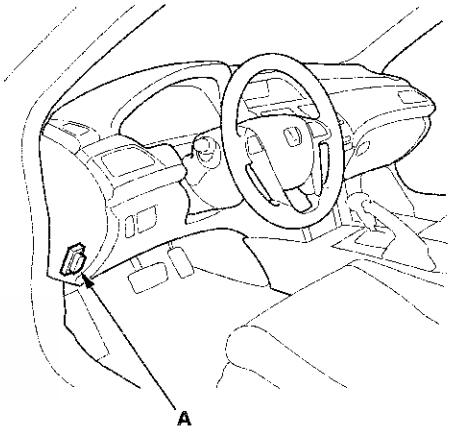

2. Turn the ignition switch to ON (II).
3. Make sure the HDS communicates with the ECM/PCM. If it doesn't, go to the DLC circuit troubleshooting (see page 11-192).
4. Select the INSPECTION MENU with the HDS.
5. Do the TP POSITION CHECK in the ETCS TEST. If needed, clean the throttle body (see page 11-359).

Throttle Body Cleaning

⚠CAUTION

Do not insert your fingers into the installed throttle body when you turn the ignition switch to ON (II) or while the ignition switch is ON (II). If you do, you will seriously injure your fingers if the throttle valve is activated.

1. Check for damage to the air cleaner element. If the air cleaner element is damaged, replace it (see page 11-360).

2. Remove the throttle body (see page 11-362).

3. Clean off the carbon from the throttle valve and inside the throttle body with a paper towel soaked in throttle plate and induction cleaner.

   NOTE:
   - Remove the throttle body to clean it.
   - Be careful not to pinch your fingers.
   - To avoid removing the molybdenum coating, do not clean the bearing area of the throttle shaft (A).
   - Do not spray throttle plate and induction cleaner directly on the throttle body.
   - Use Honda genuine throttle plate and induction cleaner.

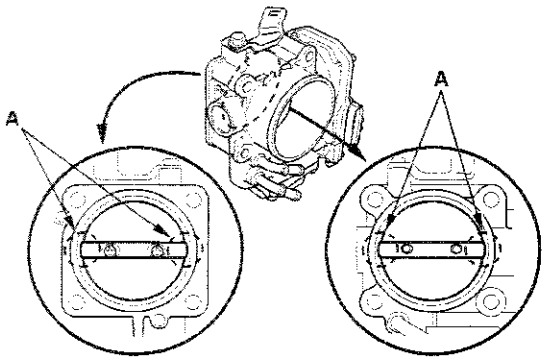

4. Install the throttle body (see page 11-362).

5. Reset the ECM/PCM with the HDS (see page 11-4).

6. Turn the ignition switch to ON (II), and wait 2 seconds.

7. Do the ECM/PCM idle learn procedure (see page 11-317).

Air Cleaner Removal/Installation

1. Disconnect the MAF sensor/IAT sensor connector (A).

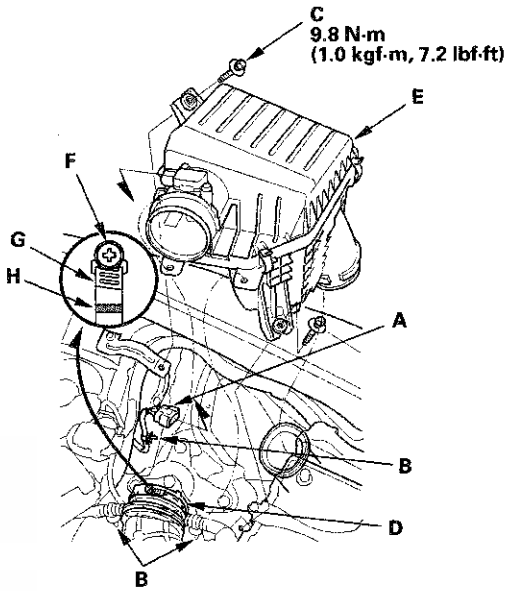

2. Remove the harness clamps (B) and the bolts (C).

3. Loosen the band (D), then remove the air cleaner housing (E).

4. Install the parts in the reverse order of removal.

   NOTE: When torquing the screw of the hose band (F), align the edge of the hose band (G) with the mark (H) painted on the hose band.

Air Cleaner Element Inspection/Replacement

1. Open the air cleaner housing cover (A).

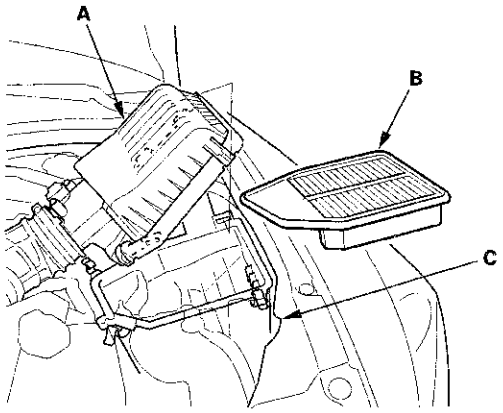

2. Remove the air cleaner element (B) from the air cleaner housing (C).

3. Check the air cleaner element for damage or clogging. If it is damaged or clogged, replace it.

   NOTE: Do not use compressed air to clean the air cleaner element.

4. Clean and remove any debris from inside the air cleaner.

5. Install the parts in the reverse order of removal.

   - If you did not replace the air cleaner element, this procedure is complete.
   - If the maintenance minder required air cleaner replacement, reset the maintenance minder (see page 3-7).
   - If you replace the air cleaner element, reset the ECM/PCM with the HDS, and do the ECM/PCM idle learn procedure (see page 11-317).

Intake Air Resonator Removal/Installation

1. Do the battery removal procedure (see page 22-90).
2. Remove the air cleaner (see page 11-359).
3. Remove the battery base (A)

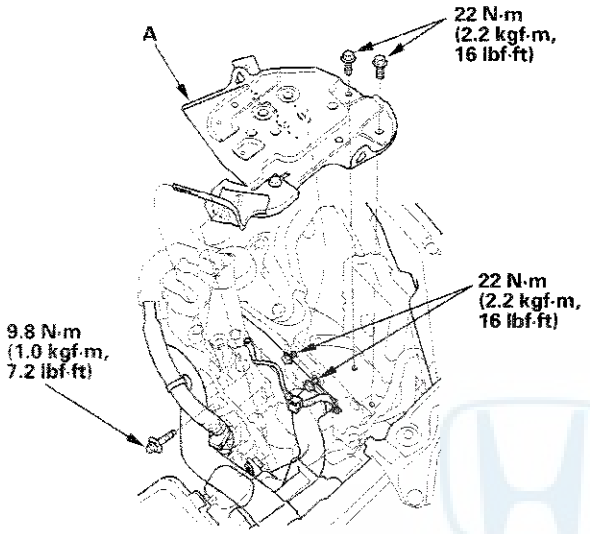

4. Remove the front grille cover.
   - 2-door (see page 20-257)
   - 4-door (see page 20-257)
5. Remove the water separator (A) and the intake air duct (B).

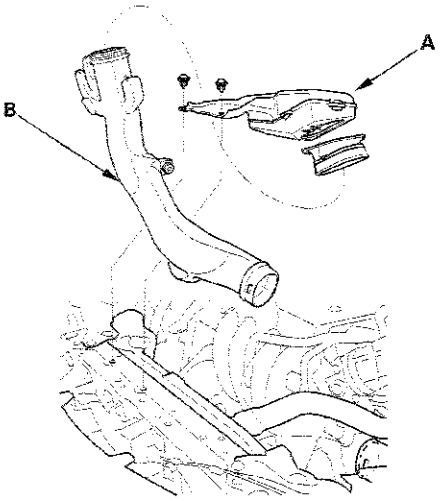

6. Remove the front bumper (see page 20-239).
7. Remove the intake air resonator (A).

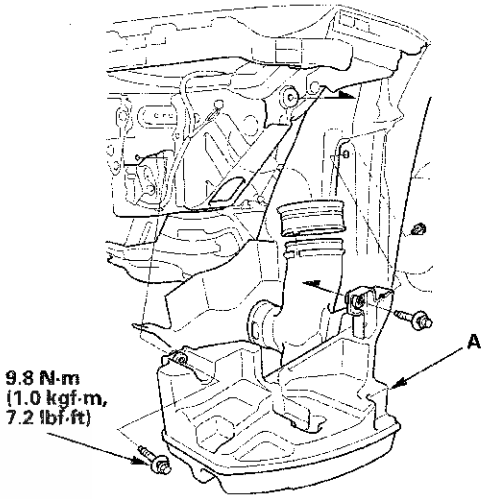

8. Install the parts in the reverse order of removal.
9. Do the battery installation procedure (see page 22-90).

Throttle Body Removal/Installation

⚠CAUTION

Do not insert your fingers into the installed throttle body when you turn the ignition switch to ON (II) or while the ignition switch is ON (II). If you do, you will seriously injure your fingers if the throttle valve is activated.

NOTE: If you are replacing or cleaning the throttle body, start at step 1. If you are removing the throttle body, start at step 4.

1. Connect the HDS to the DLC while the engine is stopped.
2. Select the INSPECTION MENU on the HDS.
3. Do the TP POSITION CHECK in the ETCS TEST.
4. Turn the ignition switch to LOCK (0).
5. Remove the intake air duct (A).

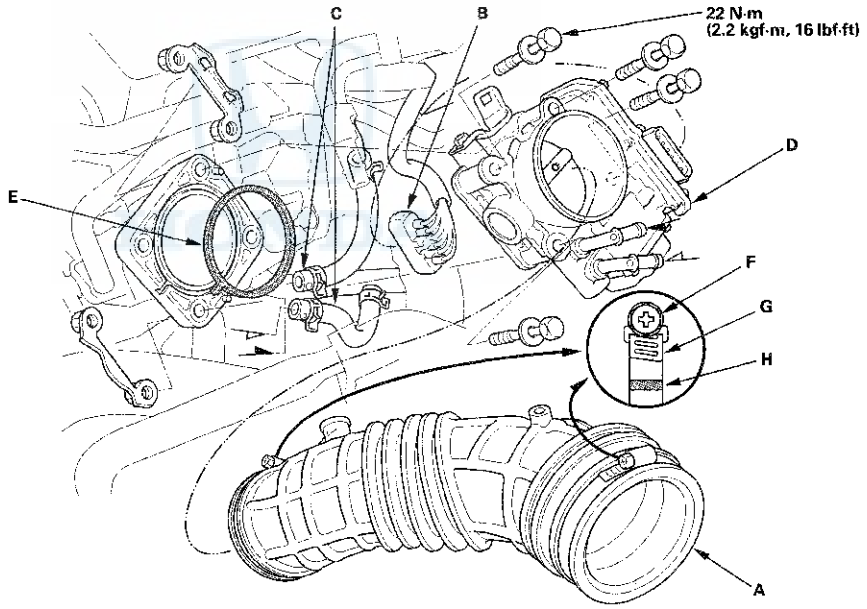

6. Disconnect the throttle body connector (B).
7. Disconnect and plug the water bypass hoses (C).
8. Remove the throttle body (D).
9. Install the parts in the reverse order of removal with a new gasket (E).

   NOTE: When torquing the screw of the hose band (F), align the edge of the hose band (G) with the mark (H) painted on the hose band.

   After installing the throttle body, do this:
   - Refill the radiator with engine coolant (see page 10-6).
   - Do the ECM/PCM idle learn procedure (see page 11-317).

Throttle Body Disassembly/Reassembly

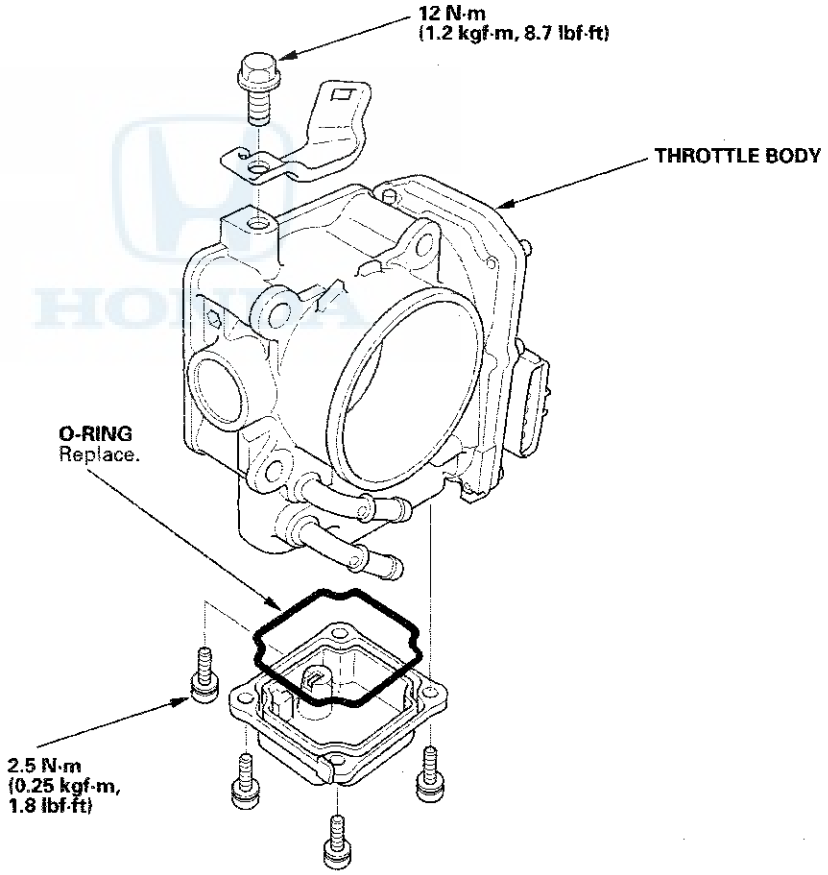

Component Location Index

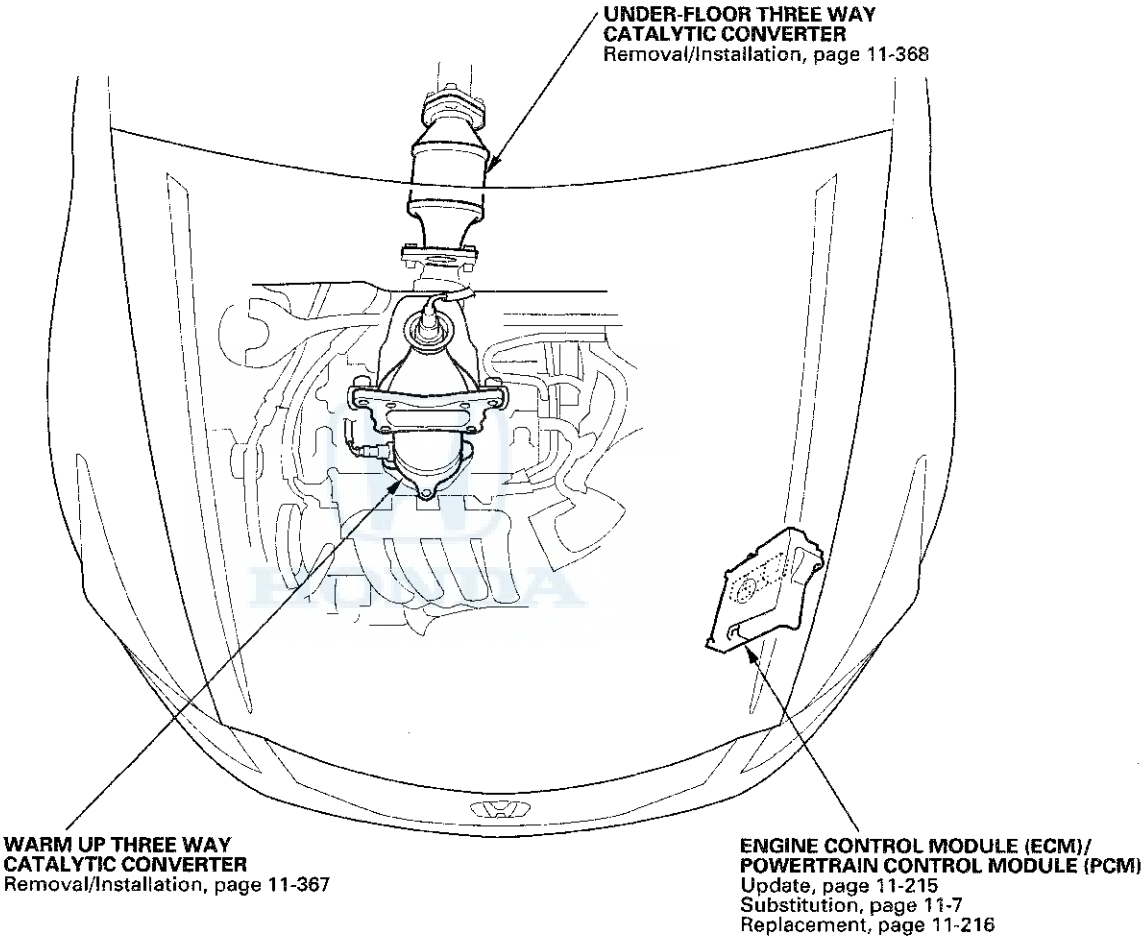

DTC Troubleshooting

DTC P0420: Catalyst System Efficiency Below Threshold

NOTE:
- Before you troubleshoot, record all freeze data and any on-board snapshot, and review the general troubleshooting information (see page 11-3).
- If some of the DTCs listed below are stored at the same time as DTC P0420, troubleshoot them first, then recheck for DTC P0420.
  P0137, P0138: Secondary HO2S (Sensor 2)
  P0141: Secondary HO2S (Sensor 2) heater
- P0300: Random misfire
  P0301—P0304: No. 1, No. 2, No. 3, or No. 4 cylinder misfire detected
- Poor quality fuel may cause this DTC.

1. Turn the ignition switch to ON (II).

2. Clear the DTC with the HDS.

3. Start the engine. Hold the engine speed at 3,000 rpm without load (A/T in P or N, M/T in neutral) until the radiator fan comes on, then let it idle.

4. Test-drive under these conditions:

   - Engine coolant temperature (ECT SENSOR 1) above 158 °F (70 °C)
   - Vehicle speed between 45—75 mph (72—120 km/h) for 5 minutes or more with cruise control set
   - Vehicle speed between 55—75 mph (88—120 km/h) for 10 seconds, then decelerate (with the throttle fully closed). Repeat this three or more times
   - Maintain the vehicle speed at 55 mph (88 km/h) for 5 minutes or more with cruise control set

5. Monitor the OBD STATUS for DTC P0420 in the DTCs MENU with the HDS.

   Does the screen indicate FAILED?

   YES—Go to step 6.

   NO—If the screen indicates PASSED, intermittent failure, the system is OK at this time. If the screen indicates EXECUTING, keep driving until a result comes on. If the screen indicates OUT OF CONDITION or NOT COMPLETED, go to step 4 and recheck.

6. Turn the ignition switch to LOCK (0).

7. Replace the WU-TWC (see page 11-367).

8. Turn the ignition switch to ON (II).

9. Reset the ECM/PCM with the HDS.

10. Do the ECM/PCM idle learn procedure (see page 11-317).

11. Start the engine. Hold the engine speed at 3,000 rpm without load (A/T in P or N, M/T in neutral) until the radiator fan comes on, then let it idle.

12. Test-drive for about 10 minutes, varying the vehicle speed.

13. Check the CATA MONITOR CONDITION in the DATA LIST with the HDS.

    Is the condition OK?

    YES—Go to step 14.

    NO—Go to step 11 and recheck.

(cont'd)

DTC Troubleshooting (cont'd)

14. Test-drive under these conditions:

    - Engine coolant temperature (ECT SENSOR 1) above 158 °F (70 °C)
    - Vehicle speed between 55—75 mph (88—120 km/h) for 10 seconds, then decelerate (with the throttle fully closed). Repeat this three or more times.
    - Maintain the vehicle speed at 55 mph (88 km/h) for 5 minutes or more with cruise control set

15. Check for Temporary DTCs or DTCs with the HDS.

    Is DTC P0420 indicated?

    YES—Check the fuel quality, then go to step 1.

    NO—Go to step 16.

16. Monitor the OBD STATUS for DTC P0420 in the DTCs MENU with the HDS.

    Does the screen indicate PASSED?

    YES—Troubleshooting is complete. If any other Temporary DTCs or DTCs were indicated in step 15, go to the indicated DTC's troubleshooting. ■

    NO—If the screen indicates FAILED, check the fuel quality, then go to step 1. If the screen indicates EXECUTING, keep driving until a result comes on. If the screen indicates OUT OF CONDITION or NOT COMPLETED, go to step 11.

Warm Up TWC Removal/Installation

1. Raise the vehicle on a lift.
2. Remove the secondary HO2S (Sensor 2) (see page 11-209).
3. Remove the bolts (A).

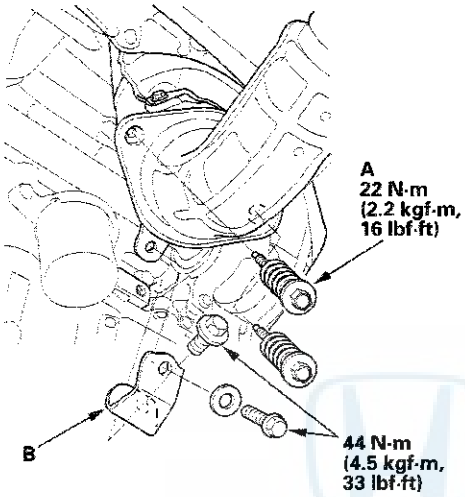

4. Remove the WU-TWC bracket (B).
5. Lower the vehicle.
6. Remove the strut brace (see page 20-289).
7. Remove the A/F sensor (Sensor 1) (see page 11-209).
8. Remove the upper converter cover (A).

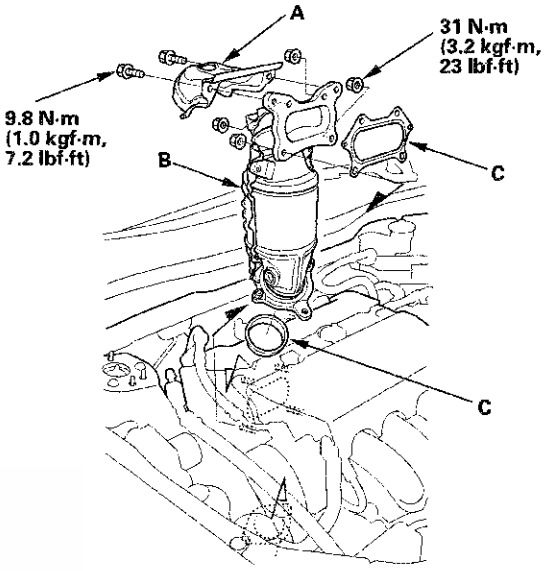

9. Remove the WU-TWC (B) and the gaskets (C).
10. Remove the converter cover (A).

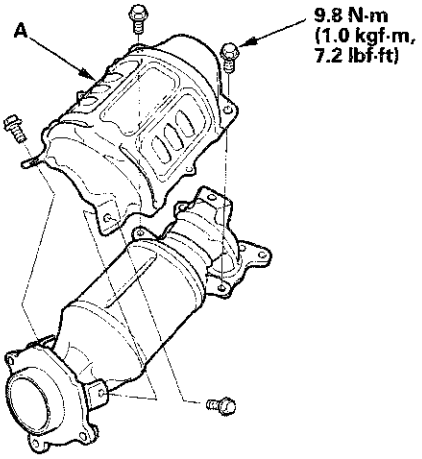

11. Install the parts in the reverse order of removal with new gaskets.

Under-floor TWC Removal/Installation

1. Raise the vehicle on a lift.
2. Remove the exhaust pipe hangers (A).

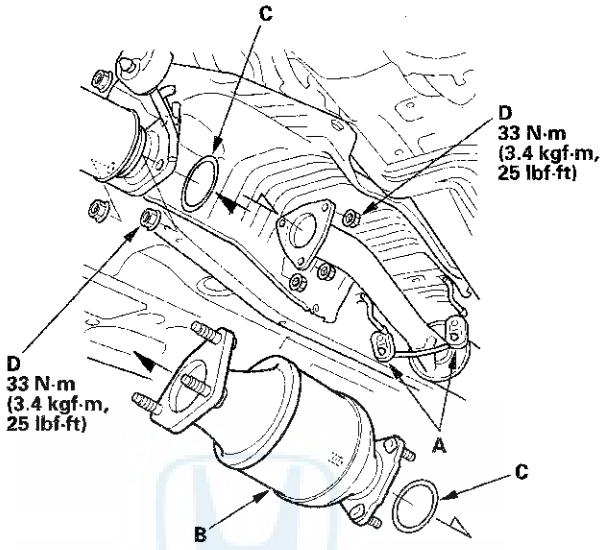

3. Remove the under-floor TWC (B).
4. Install the parts in the reverse order of removal with new gaskets (C) and new self-locking nuts (D).

Component Location Index

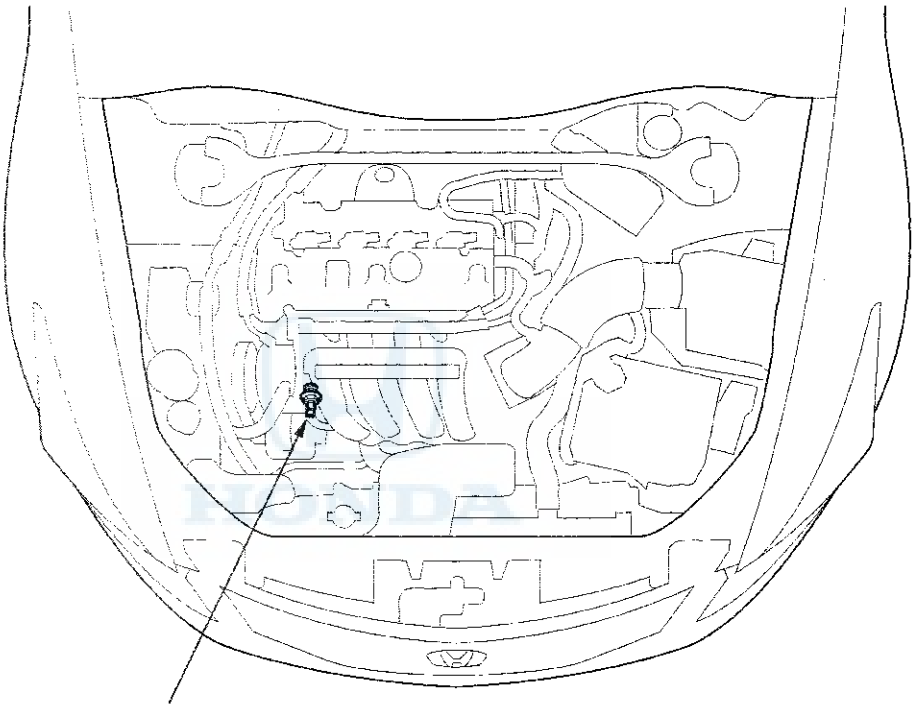

PCV VALVE
Inspection, page 11-370
Replacement, page 11-370

PCV Valve Inspection

1. Check the PCV valve (A), hoses (B), and connections for leaks or restrictions.

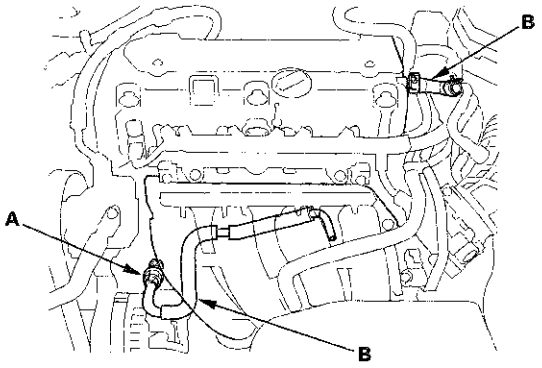

2. At idle, make sure there is a clicking sound from the PCV valve when the hose between the PCV valve and intake manifold is lightly pinched (A) with your fingers or pliers.
   If there is no clicking sound, check the PCV valve washer for cracks or damage. If the washer is OK, replace the PCV valve and recheck.

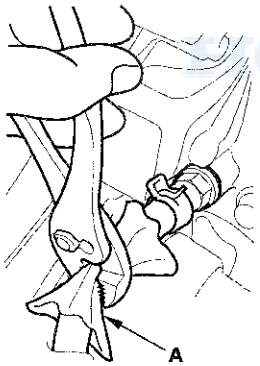

PCV Valve Replacement

1. Disconnect the PCV hose.
2. Remove the PCV valve (A).

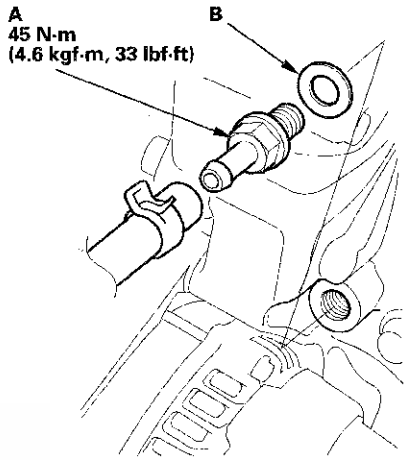

3. Install the parts in the reverse order of removal with a new washer (B).

Component Location Index

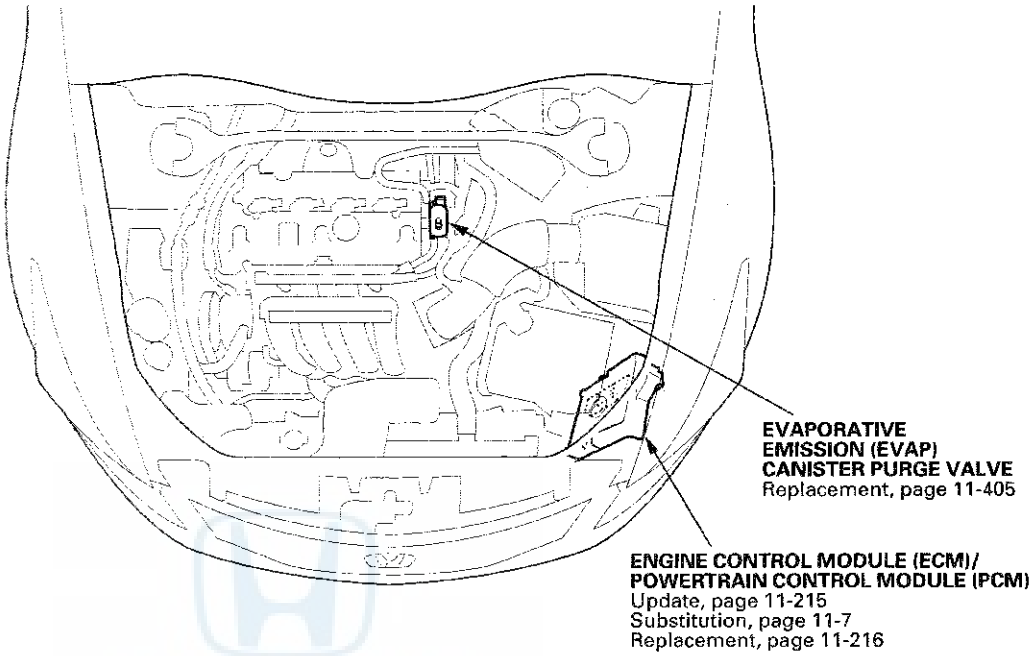

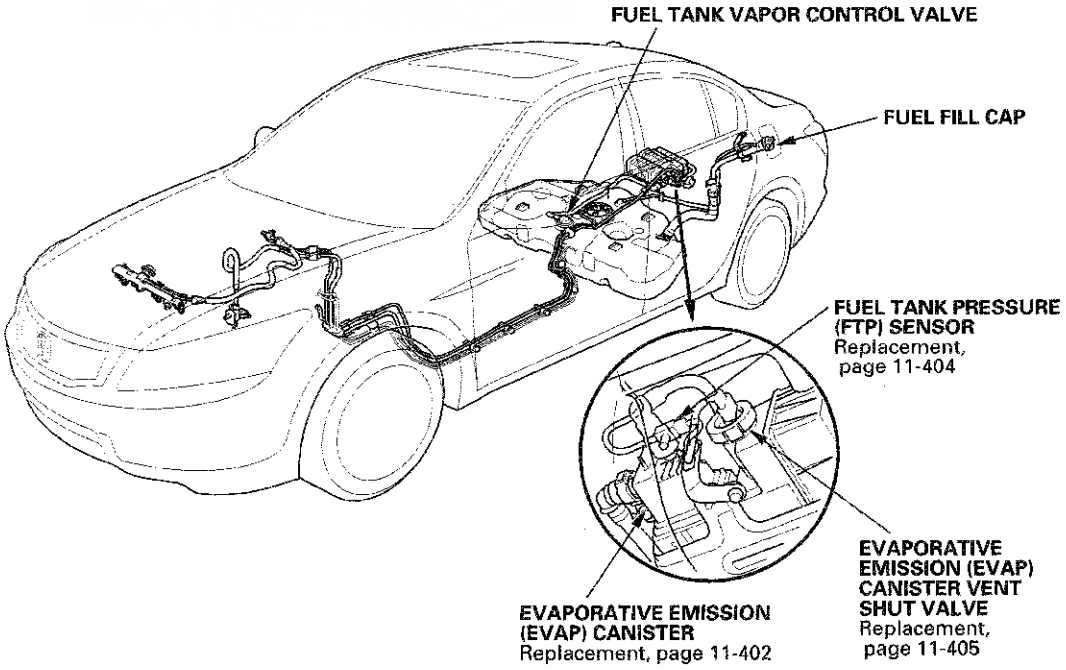

DTC Troubleshooting

DTC P0443: EVAP Canister Purge Valve Circuit Malfunction

Special Tools Required
Vacuum pump/gauge, 0—30 in.Hg, Snap-on YA4000A or equivalent, commercially available

NOTE: Before you troubleshoot, record all freeze data and any on-board snapshot, and review the general troubleshooting information (see page 11-3).

1. Turn the ignition switch to ON (II).
2. Clear the DTC with the HDS.
3. Start the engine. Hold the engine speed at 3,000 rpm without load (A/T in P or N, M/T in neutral) until the radiator fan comes on, then let it idle.
4. Check for Temporary DTCs or DTCs with the HDS.

   Is DTC P0443 indicated?

   YES—Go to step 5.

   NO—Intermittent failure, the system is OK at this time. Check for poor connections or loose terminals at the EVAP canister purge valve and the ECM/PCM.■
5. Turn the ignition switch to LOCK (0), and allow the engine to cool to below 131 °F (55 °C).
6. Disconnect the vacuum hose (A) from the purge valve (B) in the engine compartment, and connect a vacuum pump/gauge, 0—30 in.Hg, to the hose.

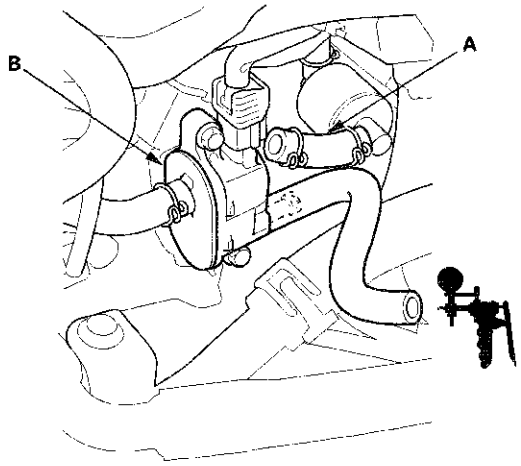

7. Start the engine, and let it idle.

   Is there vacuum?

   YES—Go to step 8.

   NO—Go to step 14.
8. Turn the ignition switch to LOCK (0).
9. Disconnect the EVAP canister purge valve 2P connector.
10. Check for continuity between EVAP canister purge valve 2P connector terminal No. 2 and body ground.

EVAP CANISTER PURGE VALVE 2P CONNECTOR

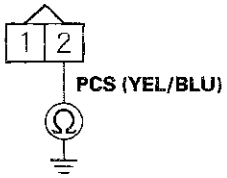

Wire side of female terminals

Is there continuity?

YES—Go to step 11.

NO—Go to step 23.

11. Jump the SCS line with the HDS.

12. Disconnect ECM/PCM connector B (49P).

13. Check for continuity between EVAP canister purge valve 2P connector terminal No. 2 and body ground.

EVAP CANISTER PURGE VALVE 2P CONNECTOR

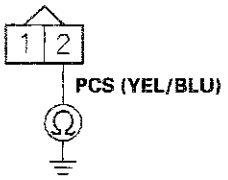

Wire side of female terminals

Is there continuity?

YES—Repair short in the wire between the EVAP canister purge valve and the ECM/PCM (B3), then go to step 24.

NO—Go to step 30.

14. Turn the ignition switch to LOCK (0).

15. Disconnect the EVAP canister purge valve 2P connector.

16. Turn the ignition switch to ON (II).

17. Measure the voltage between EVAP canister purge valve 2P connector terminal No. 1 and body ground.

EVAP CANISTER PURGE VALVE 2P CONNECTOR

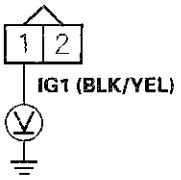

Wire side of female terminals

Is there battery voltage?

YES—Go to step 18.

NO—Repair open in the wire between the EVAP canister purge valve and the No. 7 ACG (15 A) fuse in the driver's under-dash fuse/relay box, then go to step 24.

18. Turn the ignition switch to LOCK (0).

19. Jump the SCS line with the HDS.

20. Disconnect ECM/PCM connector B (49P).

(cont'd)

DTC Troubleshooting (cont'd)

21. Check for continuity between ECM/PCM connector terminal B3 and EVAP canister purge valve 2P connector terminal No. 2.

EVAP CANISTER PURGE VALVE 2P CONNECTOR

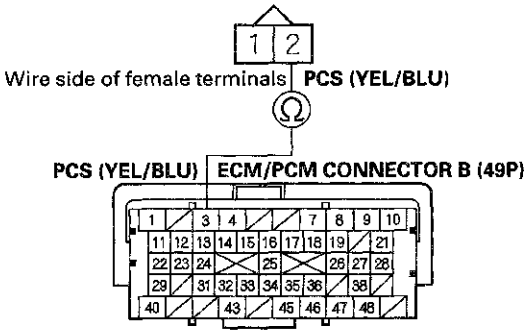

Terminal side of female terminals

Is there continuity?

YES—Go to step 22.

NO—Repair open in the wire between the EVAP canister purge valve and the ECM/PCM (B3), then go to step 24.

22. At the valve side, measure the resistance between EVAP canister purge valve 2P connector terminals No. 1 and No. 2.

EVAP CANISTER PURGE VALVE 2P CONNECTOR

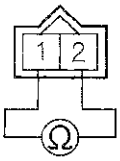

Terminal side of male terminals

Is there about 23—26 Ω at room temperature?

YES—Go to step 30.

NO—Go to step 23.

23. Replace the EVAP canister purge valve (see page 11-405).

24. Reconnect all connectors.

25. Turn the ignition switch to ON (II).

26. Reset the ECM/PCM with the HDS.

27. Do the ECM/PCM idle learn procedure (see page 11-317).

28. Check for Temporary DTCs or DTCs with the HDS.

Is DTC P0443 indicated?

YES—Check for poor connections or loose terminals at the EVAP canister purge valve and the ECM/PCM, then go to step 1.

NO—Go to step 29.

29. Monitor the OBD STATUS for DTC P0443 in the DTCs MENU with the HDS.

Does the screen indicate PASSED?

YES—Troubleshooting is complete. If any other Temporary DTCs or DTCs were indicated in step 28, go to the indicated DTC's troubleshooting.■

NO—If the screen indicates FAILED, check for poor connections or loose terminals at the EVAP canister purge valve and the ECM/PCM, then go to step 1. If the screen indicates EXECUTING, OUT OF CONDITION, or NOT COMPLETED, keep idling until a result comes on.

30. Reconnect all connectors.

31. Update the ECM/PCM if it does not have the latest software (see page 11-215), or substitute a known-good ECM/PCM (see page 11-7).

32. Start the engine, and let it idle.

33. Check for Temporary DTCs or DTCs with the HDS.

Is DTC P0443 indicated?

YES—Check for poor connections or loose terminals at the EVAP canister purge valve and the ECM/PCM. If the ECM/PCM was updated, substitute a known-good ECM/PCM (see page 11-7), then go to step 32. If the ECM/PCM was substituted, go to step 1.

NO—Go to step 34.

34. Monitor the OBD STATUS for DTC P0443 in the DTCs MENU with the HDS.

Does the screen indicate PASSED?

YES—If the ECM/PCM was updated, troubleshooting is complete. If the ECM/PCM was substituted, replace the original ECM/PCM (see page 11-216). If any other Temporary DTCs or DTCs were indicated in step 33, go to the indicated DTC's troubleshooting.■

NO—If the screen indicates FAILED, check for poor connections or loose terminals at the EVAP canister purge valve and the ECM/PCM. If the ECM/PCM was updated, substitute a known-good ECM/PCM (see page 11-7), then go to step 32. If the ECM/PCM was substituted, go to step 1. If the screen indicates EXECUTING, OUT OF CONDITION, or NOT COMPLETED, keep idling until a result comes on.

DTC Troubleshooting (cont'd)

DTC P0451: FTP Sensor Circuit Range/ Performance Problem

NOTE:
- Before you troubleshoot, record all freeze data and any on-board snapshot, and review the general troubleshooting information (see page 11-3).
- If DTC P2422 is stored at the same time as DTC P0451, troubleshoot DTC P2422 first, then recheck for DTC P0451.

1. Turn the ignition switch to ON (II).
2. Clear the DTC with the HDS.
3. Start the engine, and let it idle for 1 minute.
4. Monitor the OBD STATUS for DTC P0451 in the DTCs MENU with the HDS.

   Does the screen indicate FAILED?

   YES—Go to step 5.

   NO—If the screen indicates PASSED, intermittent failure, the system is OK at this time. Check for poor connections or loose terminals at the FTP sensor and the ECM/PCM. If the screen indicates NOT COMPLETED, keep idling until a result comes on.
5. Turn the ignition switch to LOCK (0).
6. Replace the FTP sensor (see page 11-404).
7. Turn the ignition switch to ON (II).
8. Reset the ECM/PCM with the HDS.
9. Do the ECM/PCM idle learn procedure (see page 11-317).
10. Start the engine, and let it idle for 1 minute.
11. Check for Temporary DTCs or DTCs with the HDS.

    Is DTC P0451 indicated?

    YES—Check for poor connections or loose terminals at the FTP sensor and the ECM/PCM, then go to step 1.

    NO—Go to step 12.
12. Monitor the OBD STATUS for DTC P0451 in the DTCs MENU with the HDS.

    Does the screen indicate PASSED?

    YES—Troubleshooting is complete. If any other Temporary DTCs or DTCs were indicated in step 11, go to the indicated DTC's troubleshooting.■

    NO—If the screen indicates FAILED, check for poor connections or loose terminals at the FTP sensor and the ECM/PCM, then go to step 1. If the screen indicates NOT COMPLETED, keep idling until a result comes on.

DTC P0452: FTP Sensor Circuit Low Voltage

NOTE: Before you troubleshoot, record all freeze data and any on-board snapshot, and review the general troubleshooting information (see page 11-3).

1. Turn the ignition switch to ON (II).
2. Clear the DTC with the HDS.
3. Turn the ignition switch to LOCK (0).
4. Remove the fuel fill cap.
5. Turn the ignition switch to ON (II).
6. Check the FTP SENSOR in the DATA LIST with the HDS.

   Is about − 7.3 kPa (−2.16 in.Hg, −55 mmHg), or 0.3 V or less indicated?

   YES—Go to step 10.

   NO—Go to step 7.
7. Install the fuel fill cap.
8. Start the engine.
9. Monitor the OBD STATUS for DTC P0452 in the DTCs MENU with the HDS.

   Does the screen indicate FAILED?

   YES—Go to step 10.

   NO—If the screen indicates PASSED, intermittent failure, the system is OK at this time. Check for poor connections or loose terminals at the FTP sensor and the ECM/PCM. If the screen indicates NOT COMPLETED, keep idling until a result comes on.
10. Turn the ignition switch to LOCK (0).
11. Disconnect the FTP sensor 3P connector.
12. Turn the ignition switch to ON (II).
13. Check the FTP SENSOR in the DATA LIST with the HDS.

    Is about − 7.3 kPa (−2.16 in.Hg, −55 mmHg), or 0.3 V or less indicated?

    YES—Go to step 20.

    NO—Go to step 14.
14. Measure the voltage between FTP sensor 3P connector terminal No. 1 and body ground.

FTP SENSOR 3P CONNECTOR

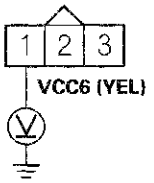

Wire side of female terminals

Is there about 5 V?

YES—Go to step 24.

NO—Go to step 15.

(cont'd)

DTC Troubleshooting (cont'd)

15. Turn the ignition switch to LOCK (0).
16. Jump the SCS line with the HDS.
17. Disconnect ECM/PCM connector A (49P).
18. Connect FTP sensor 3P connector terminal No. 1 to body ground with a jumper wire.

FTP SENSOR 3P CONNECTOR

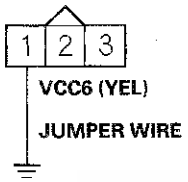

Wire side of female terminals

19. Check for continuity between ECM/PCM connector terminal A20 and body ground.

ECM/PCM CONNECTOR A (49P)

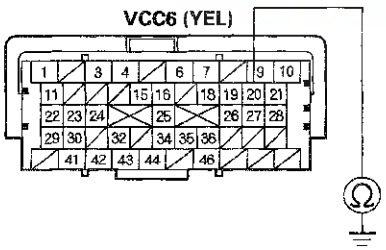

Terminal side of female terminals

Is there continuity?

YES—Go to step 32.

NO—Repair open in the wire between the ECM/PCM (A20) and the FTP sensor, then go to step 26.

20. Turn the ignition switch to LOCK (0).
21. Jump the SCS line with the HDS.
22. Disconnect ECM/PCM connector A (49P).
23. Check for continuity between FTP sensor 3P connector terminal No. 2 and body ground.

FTP SENSOR 3P CONNECTOR

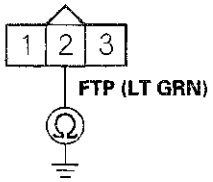

Wire side of female terminals

Is there continuity?

YES—Repair short in the wire between the ECM/PCM (A27) and the FTP sensor, then go to step 26.

NO—Go to step 32.

24. Turn the ignition switch to LOCK (0).

25. Replace the FTP sensor (see page 11-404).

26. Reconnect all connectors.

27. Turn the ignition switch to ON (II).

28. Reset the ECM/PCM with the HDS.

29. Do the ECM/PCM idle learn procedure (see page 11-317).

30. Check for Temporary DTCs or DTCs with the HDS.

    Is DTC P0452 indicated?

    YES—Check for poor connections or loose terminals at the FTP sensor and the ECM/PCM, then go to step 1.

    NO—Go to step 31.

31. Monitor the OBD STATUS for DTC P0452 in the DTCs MENU with the HDS.

    Does the screen indicate PASSED?

    YES—Troubleshooting is complete. If any other Temporary DTCs or DTCs were indicated in step 30, go to the indicated DTC's troubleshooting. ■

    NO—If the screen indicates FAILED, check for poor connections or loose terminals at the FTP sensor and the ECM/PCM, then go to step 1. If the screen indicates NOT COMPLETED, keep idling until a result comes on.

32. Reconnect all connectors.

33. Update the ECM/PCM if it does not have the latest software (see page 11-215), or substitute a known-good ECM/PCM (see page 11-7).

34. Start the engine, and let it idle.

35. Check for Temporary DTCs or DTCs with the HDS.

    Is DTC P0452 indicated?

    YES—Check for poor connections or loose terminals at the FTP sensor and the ECM/PCM. If the ECM/PCM was updated, substitute a known-good ECM/PCM (see page 11-7), then go to step 34. If the ECM/PCM was substituted, go to step 1.

    NO—Go to step 36.

36. Monitor the OBD STATUS for DTC P0452 in the DTCs MENU with the HDS.

    Does the screen indicate PASSED?

    YES—If the ECM/PCM was updated, troubleshooting is complete. If the ECM/PCM was substituted, replace the original ECM/PCM (see page 11-216). If any other Temporary DTCs or DTCs were indicated in step 35, go to the indicated DTC's troubleshooting. ■

    NO—If the screen indicates FAILED, check for poor connections or loose terminals at the FTP sensor and the ECM/PCM. If the ECM/PCM was updated, substitute a known-good ECM/PCM (see page 11-7), then go to step 34. If the ECM/PCM was substituted, go to step 1. If the screen indicates NOT COMPLETED, keep idling until a result comes on.

DTC Troubleshooting (cont'd)

DTC P0453: FTP Sensor Circuit High Voltage

NOTE: Before you troubleshoot, record all freeze data and any on-board snapshot, and review the general troubleshooting information (see page 11-3).

1. Turn the ignition switch to ON (II).
2. Clear the DTC with the HDS.
3. Turn the ignition switch to LOCK (0).
4. Remove the fuel fill cap.
5. Turn the ignition switch to ON (II).
6. Check the FTP SENSOR in the DATA LIST with the HDS.

   Is about 7.3 kPa (2.16 in.Hg, 55 mmHg), or 4.7 V or more indicated?

   YES—Go to step 10.

   NO—Go to step 7.
7. Install the fuel fill cap.
8. Start the engine.
9. Monitor the OBD STATUS for DTC P0453 in the DTCs MENU with the HDS.

   Does the screen indicate FAILED?

   YES—Go to step 10.

   NO—If the screen indicates PASSED, intermittent failure, the system is OK at this time. Check for poor connections or loose terminals at the FTP sensor and the ECM/PCM. If the screen indicates NOT COMPLETED, keep idling until a result comes on.
10. Turn the ignition switch to LOCK (0).
11. Disconnect the FTP sensor 3P connector.
12. Connect FTP sensor 3P connector terminals No. 2 and No. 3 with a jumper wire.

FTP SENSOR 3P CONNECTOR

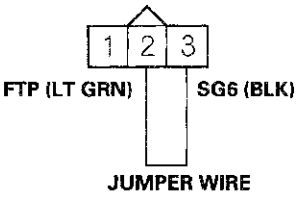

Wire side of female terminals

13. Turn the ignition switch to ON (II).
14. Check the FTP SENSOR in the DATA LIST with the HDS.

    Is about 7.3 kPa (2.16 in.Hg, 55 mmHg), or 4.7 V or more indicated?

    YES—Go to step 15.

    NO—Go to step 26.
15. Measure the voltage between FTP sensor 3P connector terminals No. 1 and No. 3.

FTP SENSOR 3P CONNECTOR

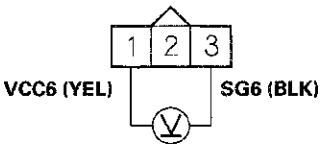

Wire side of female terminals

Is there about 5 V?

YES—Go to step 21.

NO—Go to step 16.

16. Turn the ignition switch to LOCK (0).

17. Jump the SCS line with the HDS.

18. Disconnect ECM/PCM connector A (49P).

19. Connect FTP sensor 3P connector terminal No. 3 to body ground with a jumper wire.

FTP SENSOR 3P CONNECTOR

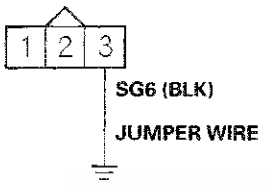

Wire side of female terminals

20. Check for continuity between ECM/PCM connector terminal A10 and body ground.

ECM/PCM CONNECTOR A (49P)

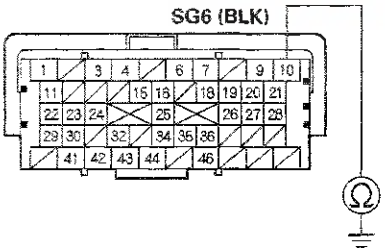

Terminal side of female terminals

Is there continuity?

YES—Go to step 34.

NO—Repair open in the wire between the ECM/PCM (A10) and the FTP sensor, then go to step 28.

21. Turn the ignition switch to LOCK (0).

22. Jump the SCS line with the HDS.

23. Disconnect ECM/PCM connector A (49P).

24. Connect FTP sensor 3P connector terminal No. 2 to body ground with a jumper wire.

FTP SENSOR 3P CONNECTOR

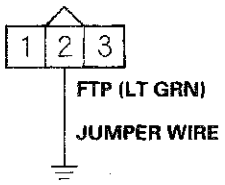

Wire side of female terminals

25. Check for continuity between ECM/PCM connector terminal A27 and body ground.

ECM/PCM CONNECTOR A (49P)

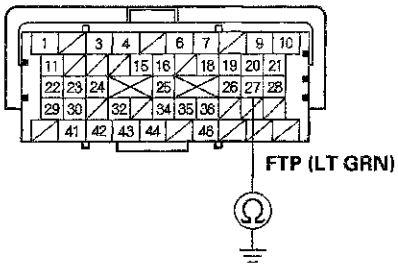

Terminal side of female terminals

Is there continuity?

YES—Go to step 34.

NO—Repair open in the wire between the ECM/PCM (A27) and the FTP sensor, then go to step 28.

(cont'd)

DTC Troubleshooting (cont'd)

26. Turn the ignition switch to LOCK (0).

27. Replace the FTP sensor (see page 11-404).

28. Reconnect all connectors.

29. Turn the ignition switch to ON (II).

30. Reset the ECM/PCM with the HDS.

31. Do the ECM/PCM idle learn procedure (see page 11-317).

32. Check for Temporary DTCs or DTCs with the HDS.

    Is DTC P0453 indicated?

    YES—Check for poor connections or loose terminals at the FTP sensor and the ECM/PCM, then go to step 1.

    NO—Go to step 33.

33. Monitor the OBD STATUS for DTC P0453 in the DTCs MENU with the HDS.

    Does the screen indicate PASSED?

    YES—Troubleshooting is complete. If any other Temporary DTCs or DTCs were indicated in step 32, go to the indicated DTC's troubleshooting.■

    NO—If the screen indicates FAILED, check for poor connections or loose terminals at the FTP sensor and the ECM/PCM, then go to step 1. If the screen indicates NOT COMPLETED, keep idling until a result comes on.

34. Reconnect all connectors.

35. Update the ECM/PCM if it does not have the latest software (see page 11-215), or substitute a known-good ECM/PCM (see page 11-7).

36. Start the engine, and let it idle.

37. Check for Temporary DTCs or DTCs with the HDS.

    Is DTC P0453 indicated?

    YES—Check for poor connections or loose terminals at the FTP sensor and the ECM/PCM. If the ECM/PCM was updated, substitute a known-good ECM/PCM (see page 11-7), then go to step 36. If the ECM/PCM was substituted, go to step 1.

    NO—Go to step 38.

38. Monitor the OBD STATUS for DTC P0453 in the DTCs MENU with the HDS.

    Does the screen indicate PASSED?

    YES—If the ECM/PCM was updated, troubleshooting is complete. If the ECM/PCM was substituted, replace the original ECM/PCM (see page 11-216). If any other Temporary DTCs or DTCs were indicated in step 37, go to the indicated DTC's troubleshooting.■

    NO—If the screen indicates FAILED, check for poor connections or loose terminals at the FTP sensor and the ECM/PCM. If the ECM/PCM was updated, substitute a known-good ECM/PCM (see page 11-7), then go to step 36. If the ECM/PCM was substituted, go to step 1. If the screen indicates NOT COMPLETED, keep idling until a result comes on.

DTC P0455: EVAP System Large Leak Detected

DTC P0456: EVAP System Very Small Leak Detected

NOTICE

The fuel system is designed to allow specified maximum vacuum and pressure conditions. Do not deviate from the vacuum and pressure tests as indicated in these procedures. Excessive pressure/vacuum would damage the EVAP components or cause eventual fuel tank failure.

Special Tools Required

Vacuum pump/gauge, 0—30 in.Hg, Snap-on YA4000A or equivalent, commercially available

NOTE:

- Before you troubleshoot, record all freeze data and any on-board snapshot, and review the general troubleshooting information (see page 11-3).
- Fresh fuel has a higher volatility that will create greater pressure/vacuum. The optimum condition for testing is less than a full tank of fresh fuel. If possible, to assist in leak detection, add 1 gallon of fresh fuel to the tank (as long as it will not fill the tank), just before starting these procedures.

1. Check the fuel fill cap (the cap must say TIGHTEN TO CLICK). It should turn 1/4 turn after it's tight, then it clicks.

   Is the correct fuel fill cap installed and properly tightened?

   YES—Go to step 2.

   NO—Replace or tighten the cap, then go to step 29.

2. Check the fuel fill cap seal (A) and the fuel fill pipe mating surface (B). Verify that the fuel fill cap tether cord (C) is not caught under the cap.

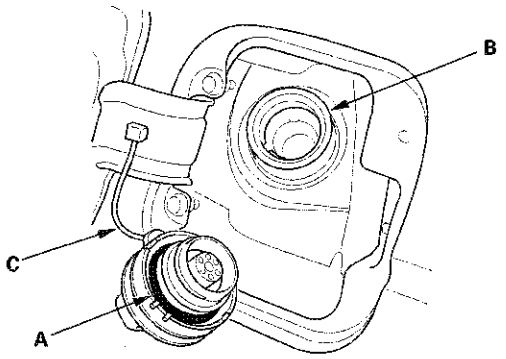

   Is the fuel fill cap seal missing or damaged, is the fuel fill pipe damaged, or is the tether cord caught under the cap?

   YES—Replace the fuel fill cap or the fuel fill pipe, then go to step 29.

   NO—Go to step 3.

3. Turn the ignition switch to ON (II).

4. Clear the DTC with the HDS.

5. Do the EVAP FUNCTION TEST in the INSPECTION MENU with the HDS.

   Is the result OK?

   YES—Intermittent failure, the system is OK at this time. Check for poor connections or loose terminals at the FTP sensor, the EVAP canister purge valve, or the EVAP canister vent shut valve, and the ECM/PCM. ■

   NO—Go to step 6.

6. Turn the ignition switch to LOCK (0).

(cont'd)

DTC Troubleshooting (cont'd)

7. Check for a poor connection or damage at the fuel tank vapor recirculation tube.

   Is the tube OK?

   YES—Go to step 8.

   NO—
   - Replace the fuel tank vapor recirculation tube, then go to step 29.
   - If necessary, replace the fuel tank (see page 11-352), then go to step 29.

8. Disconnect the fuel tank vapor recirculation tube (A) and fresh air hose (B) from the EVAP canister (C), and plug the EVAP canister port (D).

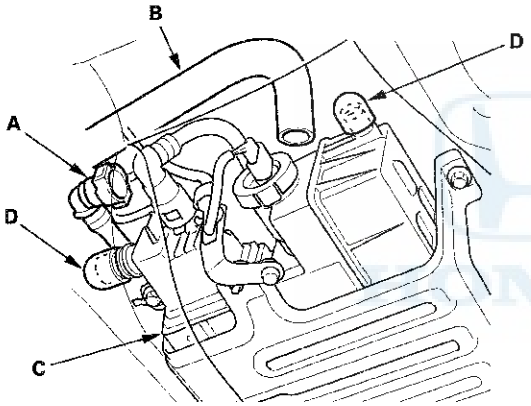

9. Disconnect the vacuum hose (engine side) (A) from the EVAP canister purge valve (B) in the engine compartment, and connect a vacuum pump/gauge, 0—30 in.Hg, to the purge valve as shown.

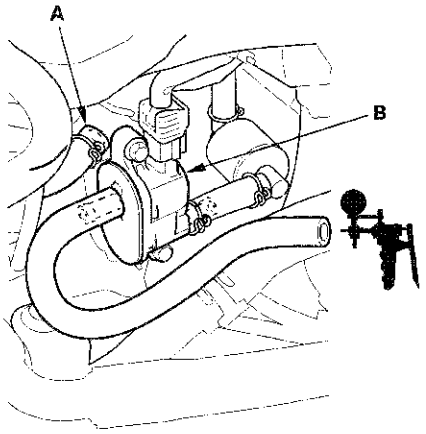

10. Turn the ignition switch to ON (II).

11. Select EVAP PCS ON in the INSPECTION MENU with the HDS.

12. Apply vacuum to the hose until the FTP reads 1.90 V (—0.59 in.Hg, —15.1 mmHg).

    NOTE: Be careful not to exceed the vacuum. If you exceed the vacuum, the FTP sensor can be damaged.

13. Select EVAP PCS OFF in the INSPECTION MENU with the HDS, and disconnect the vacuum pump/gauge.

14. Monitor the FTP SENSOR in the DATA LIST for 1 minute with the HDS.

    Does the voltage increase more than 0.2 V (0.1 in.Hg, 0.5 mmHg)?

    YES—Go to step 15.

    NO—Go to step 20.

15. Reconnect the vacuum hose (engine side) to the EVAP canister purge valve.

16. Disconnect the vacuum hose (EVAP canister side) (A) from the EVAP canister purge valve (B) in the engine compartment, and connect a vacuum pump /gauge, 0—30 in.Hg, to the vacuum hose as shown.

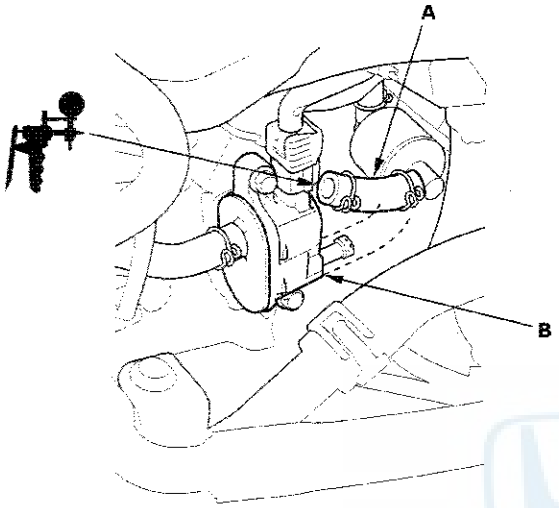

17. Apply vacuum to the hose until the FTP reads 1.90 V (—0.59 in.Hg, —15.1 mmHg).

    NOTE: Be careful not to exceed the vacuum. If you exceed the vacuum, the FTP sensor can be damaged.

18. Monitor the FTP SENSOR in the DATA LIST for 1 minute with the HDS.

    Does the voltage increase more than 0.2 V (0.1 in.Hg, 0.5 mmHg)?

    YES—Go to step 19.

    NO—Replace the EVAP canister purge valve (see page 11-405), then go to step 28.

19. Check for a loose or damaged EVAP canister purge line between the EVAP canister and the EVAP canister purge valve, or a leaking EVAP canister.

    Are the line and the EVAP canister OK?

    YES—Replace these parts, then go to step 28:

    - FTP sensor O-ring
    - EVAP canister vent shut valve O-ring
    - EVAP canister

    NO—Reconnect or repair the EVAP canister purge line, then go to step 28.

20. Reconnect the fresh air hose (A) to the EVAP canister (B).

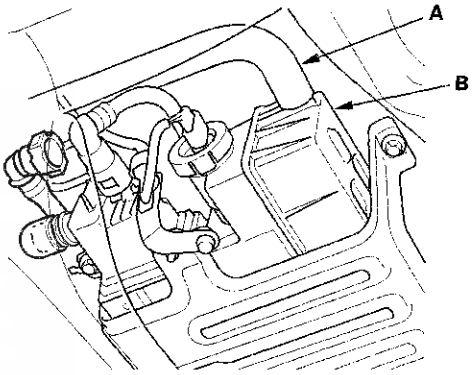

(cont'd)

DTC Troubleshooting (cont'd)

21. Reconnect the vacuum hose (engine side) to the EVAP canister purge valve.

22. Disconnect the vacuum hose (EVAP canister side) (A) from the EVAP canister purge valve (B) in the engine compartment, and connect a vacuum pump /gauge, 0—30 in.Hg, to the vacuum hose as shown.

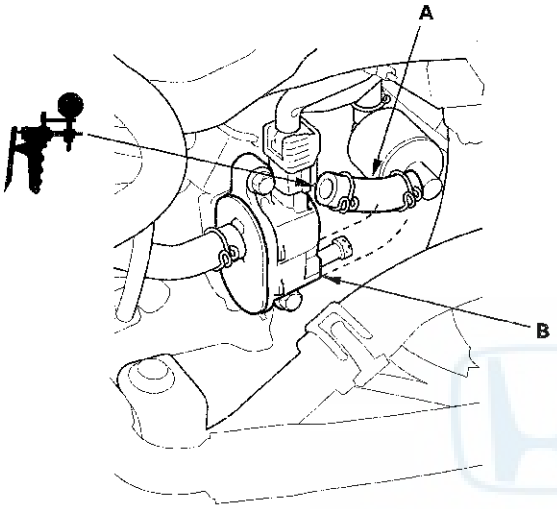

23. Select EVAP CVS ON in the INSPECTION MENU with the HDS.

24. Apply vacuum to the hose until the FTP reads 1.90 V (—0.59 in.Hg, —15.1 mmHg).

    NOTE: Be careful not to exceed the vacuum. If you exceed the vacuum, the FTP sensor can be damaged.

25. Monitor the FTP SENSOR in the DATA LIST for 1 minute with the HDS.

    Does the voltage increase more than 0.2 V (0.1 in.Hg, 2.5 mmHg)?

    YES—Replace the EVAP canister vent shut valve (see page 11-405), then go to step 28.

    NO—Go to step 26.

26. Select EVAP CVS OFF in the INSPECTION MENU with the HDS.

27. Check these parts for looseness or damage:

    - Fuel fill pipe
    - Fuel vapor return pipe

    Are the parts OK?

    YES—Check the fuel tank unit base gasket (see page 11-348), and check the fuel tank, then go to step 28.

    NO—Repair or replace the damaged parts, then go to step 28.

28. Reconnect all hoses and connectors.

29. Turn the ignition switch to ON (II).

30. Reset the ECM/PCM with the HDS.

31. Do the ECM/PCM idle learn procedure (see page 11-317).

32. Do the EVAP FUNCTION TEST in the INSPECTION MENU with the HDS.

    Is the result OK?

    YES—Troubleshooting is complete.■

    NO—Check for poor connections or loose terminals at the FTP sensor, the EVAP canister purge valve, the EVAP canister vent shut valve, and the ECM/PCM, then go to step 1.

DTC P0457: EVAP System Leak Detected/Fuel Fill Cap Loose or Missing

NOTE: Before you troubleshoot, record all freeze data and any on-board snapshot, and review the general troubleshooting information (see page 11-3).

1. Check the fuel fill cap (the cap must say TIGHTEN TO CLICK). It should turn 1/4 turn after it's tight, then it clicks.

   Is the correct fuel fill cap installed and properly tightened?

   YES—Go to step 2.

   NO—Replace or tighten the cap, then go to step 19.

2. Check the fuel fill cap seal (A) and the fuel fill pipe mating surface (B). Verify that the fuel fill cap tether cord (C) is not caught under the cap.

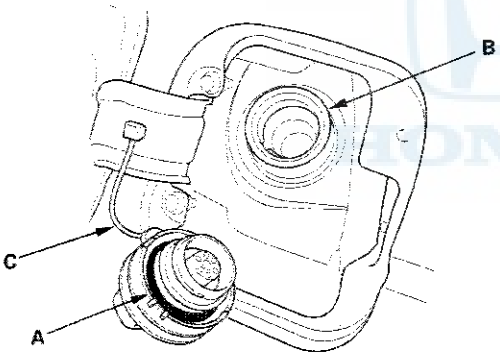

   Is the fuel fill cap seal missing or damaged, is the fuel fill pipe damaged, or is the tether cord caught under the cap?

   YES—Replace the fuel fill cap or the fuel fill pipe, then go to step 19.

   NO—Go to step 3.

3. Turn the ignition switch to ON (II).

4. Clear the DTC with the HDS.

5. Do the EVAP FUNCTION TEST in the INSPECTION MENU with the HDS.

   Is the result OK?

   YES—Intermittent failure, the system is OK at this time. Check for poor connections or loose terminals at the FTP sensor or the EVAP canister vent shut valve and the ECM/PCM. ■

   NO—Go to step 6.

6. Turn the ignition switch to LOCK (0).

7. Remove the EVAP canister vent shut valve from the EVAP canister (see page 11-405).

8. Connect the 2P connector to the EVAP canister vent shut valve.

9. Turn the ignition switch to ON (II).

10. Select EVAP CVS ON in the INSPECTION MENU with the HDS.

11. Check the EVAP canister vent shut valve (A) operation.

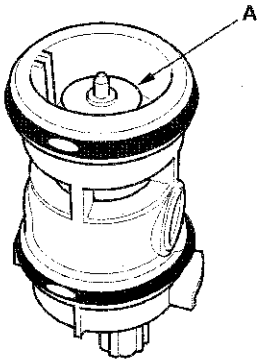

   Does the valve operate?

   YES—Check the routing of the EVAP canister vent tube, then go to step 18.

   NO—Go to step 12.

(cont'd)

DTC Troubleshooting (cont'd)

12. Turn the ignition switch to LOCK (0).

13. Replace the EVAP canister vent shut valve (see page 11-405).

14. Turn the ignition switch to ON (II).

15. Reset the ECM/PCM with the HDS.

16. Do the ECM/PCM idle learn procedure (see page 11-317).

17. Do the EVAP FUNCTION TEST in the INSPECTION MENU with the HDS.

    Is the result OK?

    YES—Troubleshooting is complete.■

    NO—Check for poor connections or loose terminals at the FTP sensor, the EVAP canister vent shut valve, and the ECM/PCM, then go to step 1.

18. Reinstall the EVAP canister vent shut valve.

19. Turn the ignition switch to ON (II).

20. Reset the ECM/PCM with the HDS.

21. Do the ECM/PCM idle learn procedure (see page 11-317).

22. Do the EVAP FUNCTION TEST in the INSPECTION MENU with the HDS.

    Is the result OK?

    YES—Troubleshooting is complete.■

    NO—Check for poor connections or loose terminals at the FTP sensor, the EVAP canister vent shut valve, and the ECM/PCM, then go to step 1.

DTC P0496: EVAP System High Purge Flow Detected

NOTE: Before you troubleshoot, record all freeze data and any on-board snapshot, and review the general troubleshooting information (see page 11-3).

1. Turn the ignition switch to ON (II).

2. Clear the DTC with the HDS.

3. Do the EVAP FUNCTION TEST in the INSPECTION MENU with the HDS.

   Is the result OK?

   YES—Intermittent failure, the system is OK at this time. Check for poor connections or loose terminals at the FTP sensor, the EVAP canister purge valve, the EVAP canister vent shut valve, and the ECM/PCM.■

   NO—Go to step 4.

4. Turn the ignition switch to LOCK (0).

5. Replace the EVAP canister purge valve (see page 11-405).

6. Turn the ignition switch to ON (II).

7. Reset the ECM/PCM with the HDS.

8. Do the ECM/PCM idle learn procedure (see page 11-317).

9. Do the EVAP FUNCTION TEST in the INSPECTION MENU with the HDS.

   Is the result OK?

   YES—Troubleshooting is complete.■

   NO—Check for poor connections or loose terminals at the FTP sensor, the EVAP canister purge valve, the EVAP canister vent shut valve, and the ECM/PCM, then go to step 1.

DTC P0497: EVAP System Low Purge Flow Detected

Special Tools Required
- Vacuum/pressure gauge, 0—4 in.Hg 07JAZ-001000B
- Vacuum pump/gauge, 0—30 in.Hg, Snap-on YA4000A or equivalent, commercially available

NOTE: Before you troubleshoot, record all freeze data and any on-board snapshot, and review the general troubleshooting information (see page 11-3).

1. Turn the ignition switch to ON (II).

2. Clear the DTC with the HDS.

3. Do the EVAP FUNCTION TEST in the INSPECTION MENU with the HDS.

   Is the result OK?

   YES—Intermittent failure, the system is OK at this time. Check for poor connections or loose terminals at the EVAP canister purge valve, the FTP sensor, and the ECM/PCM.■

   NO—Go to step 4.

4. Turn the ignition switch to LOCK (0).

5. Check for poor connections, blockage, or damage in the EVAP canister purge line between the throttle body and the EVAP canister.

   Is the line OK?

   YES—Go to step 6.

   NO—Reconnect or repair the EVAP canister purge line, then go to step 24.

(cont'd)

DTC Troubleshooting (cont'd)

6. Disconnect the vacuum hose (A) from the EVAP canister purge valve (B).

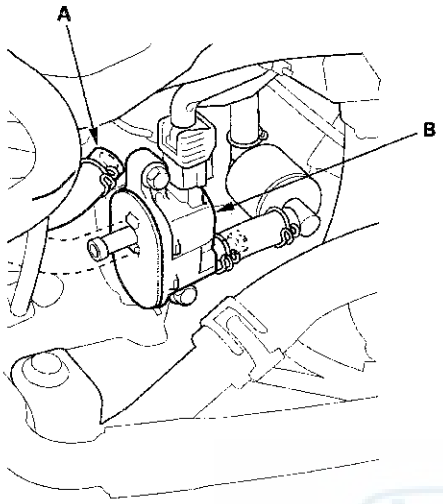

7. Disconnect the vacuum hose (A) from the purge line (at the EVAP canister side), and connect a T-fitting (B) from the vacuum gauge and the vacuum pump/gauge, 0—30 in.Hg, to the hose as shown.

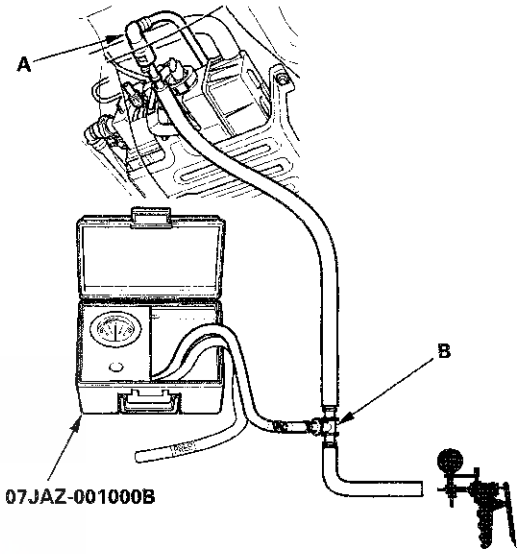

8. Turn the ignition switch to ON (II).

9. Apply about 2 kPa (0.6 in.Hg, 15 mmHg) of vacuum to the hose.

10. Select EVAP PCS ON in the INSPECTION MENU with the HDS.

    Does the vacuum release immediately?

    YES—Go to step 15.

    NO—Go to step 11.

11. Select EVAP PCS OFF in the INSPECTION MENU with the HDS.

12. Disconnect the vacuum hose (A) from the EVAP canister purge valve (B). Connect a T-fitting (C) from the vacuum gauge and the vacuum pump/gauge, 0—30 in.Hg, to the EVAP canister purge valve as shown.

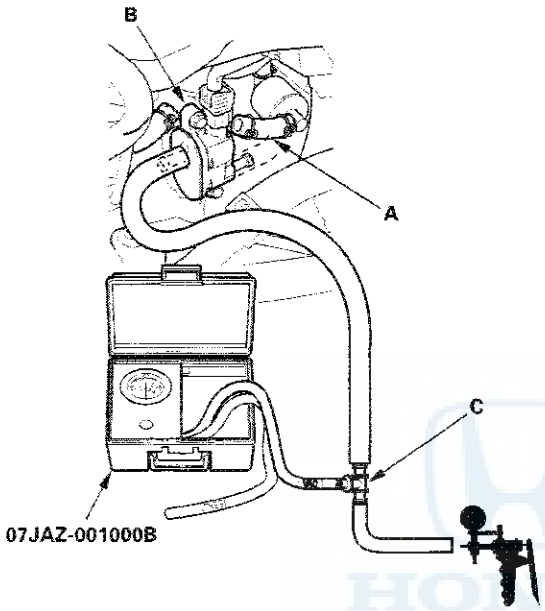

13. Apply about 2 kPa (0.6 in.Hg, 15 mmHg) of vacuum to the hose.

14. Select EVAP PCS ON in the INSPECTION MENU with the HDS.

    Does the vacuum release immediately?

    YES—Check for a blockage in the EVAP canister purge line between the EVAP canister purge valve and the EVAP canister, then go to step 24.

    NO—Replace the EVAP canister purge valve (see page 11-405), then go to step 24.

15. Connect the vacuum pump/gauge, 0—30 in.Hg, to the vacuum hose (A) as shown.

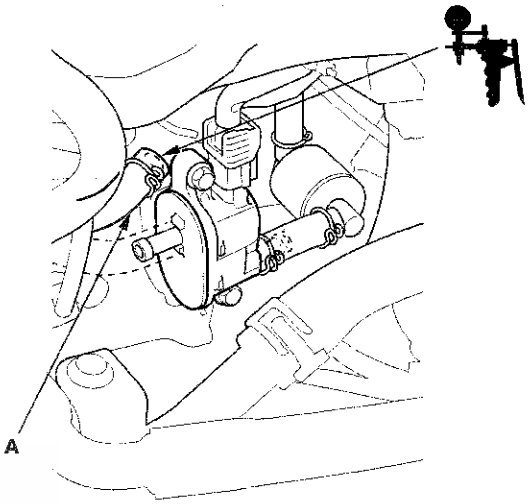

16. Start the engine, and let it idle.

    Is there vacuum?

    YES—Go to step 17.

    NO—Check for a blockage at the EVAP purge line between the throttle body and the EVAP canister purge valve, then go to step 24.

17. Turn the ignition switch to LOCK (0).

18. Remove the FTP sensor with its connector connected (see page 11-404).

(cont'd)

DTC Troubleshooting (cont'd)

19. Connect a T-fitting (A) to the vacuum pump/gauge, 0—30 in.Hg, then connect the vacuum pump to the FTP sensor (B) as shown.

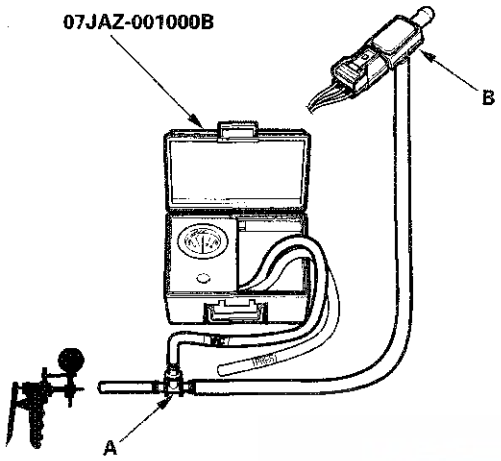

20. Turn the ignition switch to ON (II).

21. Check and record the FTP SENSOR reading in the DATA LIST with the HDS.

22. Slowly apply about 1.3 kPa (0.4 in.Hg, 10 mmHg) of vacuum to the hose.

23. Check the FTP SENSOR in the DATA LIST with the HDS.

    Does the value change?

    YES—Check for debris or blockage at the EVAP canister port, then go to step 24.

    NO—Replace the FTP sensor (see page 11-404), then go to step 24.

24. Turn the ignition switch to ON (II).

25. Reset the ECM/PCM with the HDS.

26. Do the ECM/PCM idle learn procedure (see page 11-317).

27. Do the EVAP FUNCTION TEST in the INSPECTION MENU with the HDS.

    Is the result OK?

    YES—Troubleshooting is complete.■

    NO—Check for poor connections or loose terminals at the EVAP canister purge valve, the FTP sensor, and the ECM/PCM, then go to step 1.

DTC P0498: EVAP Canister Vent Shut Valve Circuit Low Voltage

NOTE: Before you troubleshoot, record all freeze data and any on-board snapshot, and review the general troubleshooting information (see page 11-3).

1. Turn the ignition switch to ON (II).
2. Clear the DTC with the HDS.
3. Check for Temporary DTCs or DTCs with the HDS.

   Is DTC P0498 indicated?

   YES—Go to step 6.

   NO—Go to step 4.

4. Select EVAP CVS ON in the INSPECTION MENU with the HDS.
5. Check for Temporary DTCs or DTCs with the HDS.

   Is DTC P0498 indicated?

   YES—Go to step 6.

   NO—Intermittent failure, the system is OK at this time. Check for poor connections or loose terminals at the EVAP canister vent shut valve and the ECM/PCM. ■

6. Turn the ignition switch to LOCK (0).
7. Disconnect the EVAP canister vent shut valve 2P connector.
8. Turn the ignition switch to ON (II).
9. Measure the voltage between EVAP canister vent shut valve 2P connector terminal No. 2 and body ground.

EVAP CANISTER VENT SHUT VALVE 2P CONNECTOR

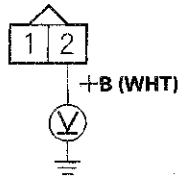

Wire side of female terminals

Is there battery voltage?

YES—Go to step 10.

NO—Repair open in the wire between the EVAP canister vent shut valve and the PGM-FI subrelay, then go to step 18.

10. Turn the ignition switch to LOCK (0).
11. At the valve side, measure the resistance between EVAP canister vent shut valve 2P connector terminals No. 1 and No. 2.

EVAP CANISTER VENT SHUT VALVE 2P CONNECTOR

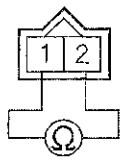

Terminal side of male terminals

Is there about 25–30 Ω at room temperature?

YES—Go to step 12.

NO—Go to step 17.

(cont'd)

DTC Troubleshooting (cont'd)

12. Jump the SCS line with the HDS.

13. Disconnect ECM/PCM connector A (49P).

14. Check for continuity between ECM/PCM connector terminal A11 and body ground.

ECM/PCM CONNECTOR A (49P)

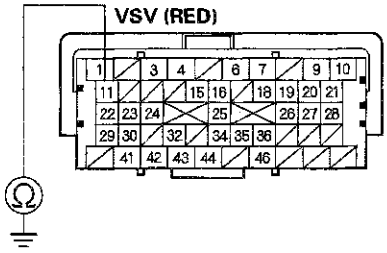

Terminal side of female terminals

Is there continuity?

YES—Repair short in the wire between the EVAP canister vent shut valve and the ECM/PCM (A11), then go to step 18.

NO—Go to step 15.

15. Connect EVAP canister vent shut valve 2P connector terminal No. 1 to body ground with a jumper wire.

EVAP CANISTER VENT SHUT VALVE 2P CONNECTOR

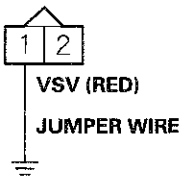

Wire side of female terminals

16. Check for continuity between ECM/PCM connector terminal A11 and body ground.

ECM/PCM CONNECTOR A (49P)

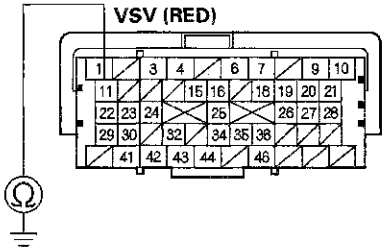

Terminal side of female terminals

Is there continuity?

YES—Go to step 25.

NO—Repair open in the wire between the EVAP canister vent shut valve and the ECM/PCM (A11), then go to step 18.

17. Replace the EVAP canister vent shut valve (see page 11-405).

18. Reconnect all connectors.

19. Turn the ignition switch to ON (II).

20. Reset the ECM/PCM with the HDS.

21. Do the ECM/PCM idle learn procedure (see page 11-317).

22. Select EVAP CVS ON in the INSPECTION MENU with the HDS.

23. Check for Temporary DTCs or DTCs with the HDS.

    Is DTC P0498 indicated?

    YES—Check for poor connections or loose terminals at the EVAP canister vent shut valve and the ECM/PCM, then go to step 1.

    NO—Go to step 24.

24. Monitor the OBD STATUS for DTC P0498 in the DTCs MENU with the HDS.

    Does the screen indicate PASSED?

    YES—Troubleshooting is complete. If any other Temporary DTCs or DTCs were indicated in step 23, go to the indicated DTC's troubleshooting. ■

    NO—If the screen indicates FAILED, check for poor connections or loose terminals at the EVAP canister vent shut valve and the ECM/PCM, then go to step 1. If the screen indicates NOT COMPLETED, go to step 22.

25. Reconnect all connectors.

26. Update the ECM/PCM if it does not have the latest software (see page 11-215), or substitute a known-good ECM/PCM (see page 11-7).

27. Select EVAP CVS ON in the INSPECTION MENU with the HDS.

28. Check for Temporary DTCs or DTCs with the HDS.

    Is DTC P0498 indicated?

    YES—Check for poor connections or loose terminals at the EVAP canister vent shut valve and the ECM/PCM. If the ECM/PCM was updated, substitute a known-good ECM/PCM (see page 11-7), then go to step 27. If the ECM/PCM was substituted, go to step 1.

    NO—Go to step 29.

29. Monitor the OBD STATUS for DTC P0498 in the DTCs MENU with the HDS.

    Does the screen indicate PASSED?

    YES—If the ECM/PCM was updated, troubleshooting is complete. If the ECM/PCM was substituted, replace the original ECM/PCM (see page 11-216). If any other Temporary DTCs or DTCs were indicated in step 28, go to the indicated DTC's troubleshooting. ■

    NO—If the screen indicates FAILED, check for poor connections or loose terminals at the EVAP canister vent shut valve and the ECM/PCM. If the ECM/PCM was updated, substitute a known-good ECM/PCM (see page 11-7), then go to step 27. If the ECM/PCM was substituted, go to step 1. If the screen indicates NOT COMPLETED, go to step 27.

DTC Troubleshooting (cont'd)

DTC P0499: EVAP Canister Vent Shut Valve Circuit High Voltage

NOTE: Before you troubleshoot, record all freeze data and any on-board snapshot, and review the general troubleshooting information (see page 11-3).

1. Turn the ignition switch to ON (II).
2. Clear the DTC with the HDS.
3. Select EVAP CVS ON in the INSPECTION MENU with the HDS.
4. Check for Temporary DTCs or DTCs with the HDS.

   Is DTC P0499 indicated?

   YES—Go to step 5.

   NO—Intermittent failure, the system is OK at this time. Check for poor connections or loose terminals at the EVAP canister vent shut valve and the ECM/PCM. ■
5. Update the ECM/PCM if it does not have the latest software (see page 11-215), or substitute a known-good ECM/PCM (see page 11-7).
6. Select EVAP CVS ON in the INSPECTION MENU with the HDS.
7. Check for Temporary DTCs or DTCs with the HDS.

   Is DTC P0499 indicated?

   YES—Check for poor connections or loose terminals at the EVAP canister vent shut valve and the ECM/PCM. If the ECM/PCM was updated, substitute a known-good ECM/PCM (see page 11-7), then go to step 6. If the ECM/PCM was substituted, go to step 1.

   NO—Go to step 8.
8. Monitor the OBD STATUS for DTC P0499 in the DTCs MENU with the HDS.

   Does the screen indicate PASSED?

   YES—If the ECM/PCM was updated, troubleshooting is complete. If the ECM/PCM was substituted, replace the original ECM/PCM (see page 11-216). If any other Temporary DTCs or DTCs were indicated in step 7, go to the indicated DTC's troubleshooting. ■

   NO—If the screen indicates FAILED, check for poor connections or loose terminals at the EVAP canister vent shut valve and the ECM/PCM. If the ECM/PCM was updated, substitute a known-good ECM/PCM (see page 11-7), then go to step 6. If the ECM/PCM was substituted, go to step 1. If the screen indicates NOT COMPLETED, go to step 6.

DTC P1454: FTP Sensor Range/Performance Problem

DTC P2422: EVAP Canister Vent Shut Valve Stuck Closed Malfunction

NOTE: Before you troubleshoot, record all freeze data and any on-board snapshot, and review the general troubleshooting information (see page 11-3).

1. Turn the ignition switch to ON (II).
2. Clear the DTC with the HDS.
3. Turn the ignition switch to LOCK (0).
4. Remove the fuel fill cap, and wait 1 minute.
5. Turn the ignition switch to ON (II).
6. Check the FTP SENSOR in the DATA LIST with the HDS.

   Is it between −0.67 and 0.67 kPa (−0.2 and 0.2 in.Hg, −5 and 5 mmHg), or 2.4 and 2.6 V?

   YES—Go to step 7.

   NO—Go to step 18.
7. Install the fuel fill cap.
8. Clear the DTC with the HDS.
9. Start the engine. Hold the engine speed at 3,000 rpm without load (A/T in P or N, M/T in neutral) until the radiator fan comes on, then let it idle.
10. Monitor the OBD STATUS for DTC P1454 in the DTCs MENU with the HDS.

    Does the screen indicate FAILED?

    YES—Go to step 11.

    NO—If the screen indicates PASSED, intermittent failure, the system is OK at this time. Check for poor connections or loose terminals at the FTP sensor, the EVAP canister vent shut valve, and the ECM/PCM. Also check for a blockage in the vent hoses and the drain joint. If the screen indicates NOT COMPLETED, keep idling until a result comes on.
11. Clear the DTC with the HDS.
12. Turn the ignition switch to LOCK (0).
13. Remove the EVAP canister vent shut valve from the EVAP canister (see page 11-405).
14. Connect the 2P connector to the EVAP canister vent shut valve.
15. Turn the ignition switch to ON (II).
16. Select EVAP CVS ON in the INSPECTION MENU with the HDS.
17. Check the EVAP canister vent shut valve (A) operation.

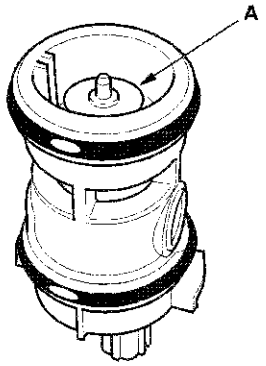

Does the valve operate?

YES—Check for a blockage in the EVAP canister, vent hoses, and drain joint, then reinstall the EVAP canister vent shut valve, and go to step 24.

NO—Replace the EVAP canister vent shut valve (see page 11-405), then go to step 24.

(cont'd)

DTC Troubleshooting (cont'd)

18. Disconnect the air tube (A) from the FTP sensor (B).

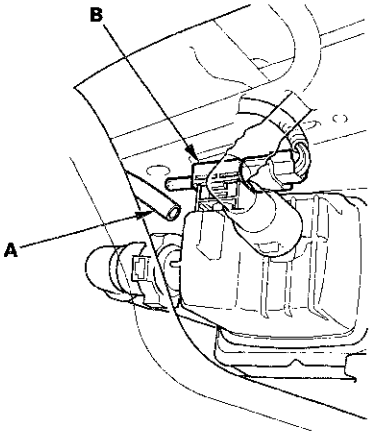

19. Check the FTP SENSOR in the DATA LIST with the HDS.

    Is it between −0.67 and 0.67 kPa (−0.2 and 0.2 in.Hg, −5 and 5 mmHg), or 2.4 and 2.6 V?

    YES—Check for a blockage in the FTP sensor air tube or vent, then go to step 24.

    NO—Go to step 20.

20. Turn the ignition switch to LOCK (0).

21. Remove the FTP sensor (A) from the EVAP canister with its connector connected (see page 11-404).

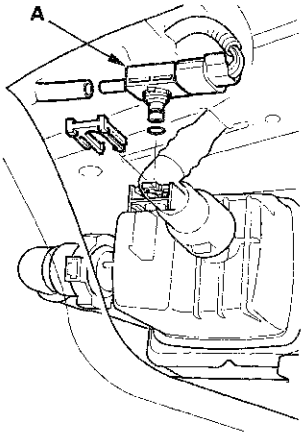

22. Turn the ignition switch to ON (II).

23. Check the FTP SENSOR in the DATA LIST with the HDS.

    Is it between −0.67 kPa and 0.67 kPa (−0.2 and 0.2 in.Hg, −5 and 5 mmHg), or 2.4 and 2.6 V?

    YES—Check for debris or clogging at the EVAP canister and the FTP sensor port, then go to step 24.

    NO—Replace the FTP sensor (see page 11-404), then go to step 24.

24. Turn the ignition switch to ON (II).

25. Reset the ECM/PCM with the HDS.

26. Do the ECM/PCM idle learn procedure (see page 11-317).

27. Start the engine. Hold the engine speed at 3,000 rpm without load (A/T in P or N, M/T in neutral) until the radiator fan comes on, then let it idle.

28. Check for Temporary DTCs or DTCs with the HDS.

    Is DTC P1454 and/or P2422 indicated?

    YES—Check for poor connections or loose terminals at the FTP sensor, the EVAP canister vent shut valve, and the ECM/PCM, then go to step 1.

    NO—Go to step 29.

29. Monitor the OBD STATUS for DTC P1454 in the DTCs MENU with the HDS.

    Does the screen indicate PASSED?

    YES—Troubleshooting is complete. If any other Temporary DTCs or DTCs were indicated in step 28, go to the indicated DTC's troubleshooting. ■

    NO—If the screen indicates FAILED, check for poor connections or loose terminals at the FTP sensor, the EVAP canister vent shut valve, and the ECM/PCM, then go to step 1. If the screen indicates NOT COMPLETED, keep idling until a result comes on.

DTC P145C: EVAP System Purge Flow Malfunction

NOTE:
- Before you troubleshoot, record all freeze data and any on-board snapshot, and review the general troubleshooting information (see page 11-3).
- If DTC P145C is indicated alone, do the troubleshooting for DTC P0496 and P0497 using freeze data for P145C.
- If DTC P0497 and P145C are stored at the same time, check for a poor connection, a blockage, or damage at the EVAP canister purge line between the EVAP canister purge valve and the EVAP canister, or a stuck closed EVAP canister purge valve.
- If any of DTCs listed below are indicated at the same time as DTC P145C, troubleshoot those DTCs first, then recheck for P145C.

P0496, P0497: EVAP system purge flow

Fuel Cap Warning Message System Troubleshooting

Special Tools Required
- Vacuum/pressure gauge, 0—4 in.Hg 07JAZ-001000B
- Vacuum pump/gauge, 0—30 in.Hg, Snap-on YA4000A or equivalent, commercially available

Do this procedure if the fuel cap warning message comes on frequently, or if the message does not go off after the fuel fill cap is tightened and the vehicle is driven several days.

1. Check the fuel fill cap (the cap must say TIGHTEN TO CLICK). It should turn 1/4 after it's tight, then it clicks.

   Is the correct fuel fill cap installed and properly tightened?

   YES—Go to step 2.

   NO—Replace or tighten the cap, then go to step 13.

2. Check the fuel fill cap seal (A) and the fuel fill pipe mating surface (B). Verify that the fuel fill cap tether cord (C) is not caught under the cap.

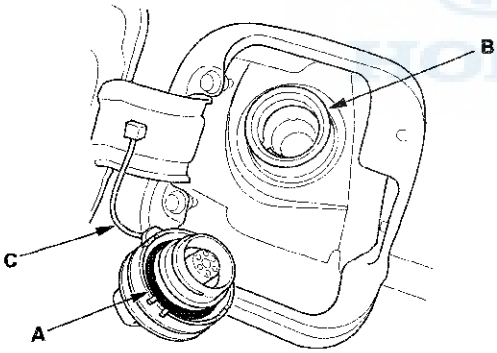

   Is the fuel fill cap seal missing or damaged, is the fuel fill pipe damaged, or is the tether cord caught under the cap?

   YES—Replace the fuel fill cap or the fuel fill pipe, then go to step 13.

   NO—Go to step 3.

3. Reinstall and tighten the fuel fill cap.

4. Clear the DTC with the HDS.

5. Start the engine. Hold the engine speed at 3,000 rpm without load (A/T in P or N, M/T in neutral) until the radiator fan comes on, then let it idle for 1 minute.

6. Test drive at 45 mph (72 km/h) for 1 minute or more.

   Does fuel cap warning message come on?

   YES—Go to step 7.

   NO—Intermittent failure, the system is OK at this time. ■

7. Turn the ignition switch to LOCK (0).

8. Disconnect the vacuum hose (A) from the EVAP canister purge valve (B) in the engine compartment, and connect a T-fitting (C) from the vacuum gauge and the vacuum pump/gauge 0—30 in.Hg, to the EVAP canister purge valve as shown.

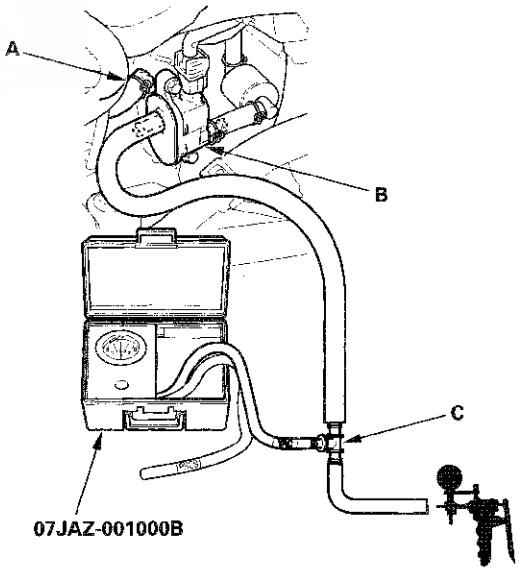

9. Turn the ignition switch to ON (II).

10. Apply about 2 kPa (0.6 in.Hg, 15 mmHg) of vacuum to the hose.

11. Select the EVAP PCS ON in the INSPECTION MENU with the HDS.

    Does the vacuum release immediately?

    YES—Check for a blockage in the EVAP canister purge line between the EVAP canister purge valve and the EVAP canister, then go to step 12.

    NO—Replace the EVAP canister purge valve (see page 11-405), then go to step 12.

12. Reconnect all hoses.

13. Turn the ignition switch to ON (II).

14. Reset the ECM/PCM with the HDS.

15. Do the ECM/PCM idle learn procedure (see page 11-317).

16. Start the engine. Hold the engine speed at 3,000 rpm without load (A/T in P or N, M/T in neutral) until the radiator fan comes on, then let it idle for 1 minute.

17. Test-drive at 45 mph (72 km/h) for 1 minute or more.

    Does the fuel cap message come on?

    YES—Go to step 1 and recheck.

    NO—Troubleshooting is complete. ■

EVAP Canister Replacement

1. Raise the vehicle on a lift.

2. Remove the wheel sensor harness clamps (A)

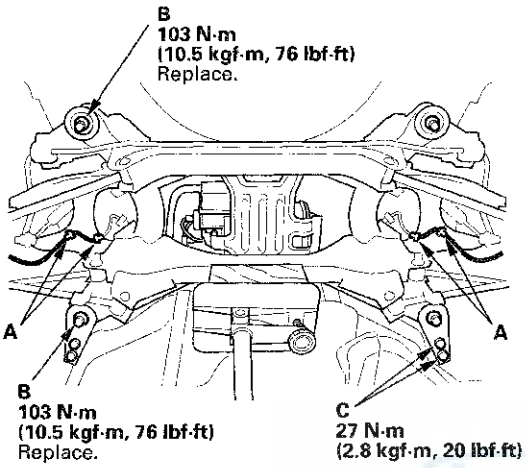

3. Support the rear subframe with a transmission jack and a wooden block as shown.

4. Remove the rear subframe mounting bolts (B) and (C).

5. Lower the transmission jack and rear subframe about 50 mm.

   NOTE: Be careful not to damage the connecting parts.

6. Remove the bolt (A), and disconnect the hoses (B), the EVAP canister vent shut valve 2P connector (C), and the FTP sensor 3P connector (D).

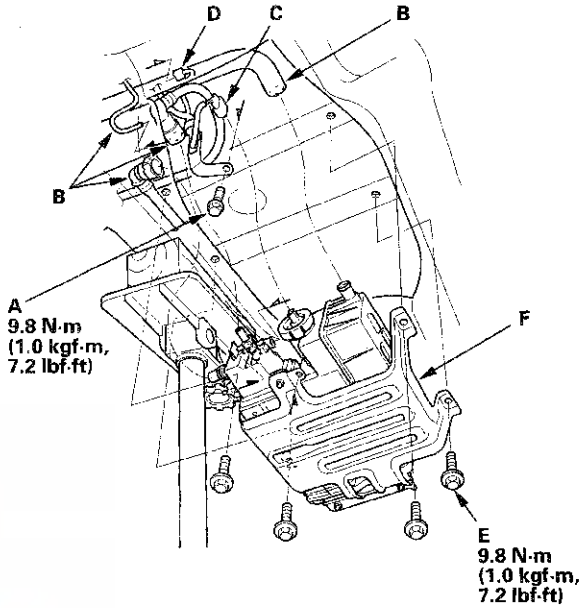

7. Remove the bolts (E), then remove the EVAP canister assembly (F).

8. Remove the EVAP canister (A) from the EVAP canister bracket (B).

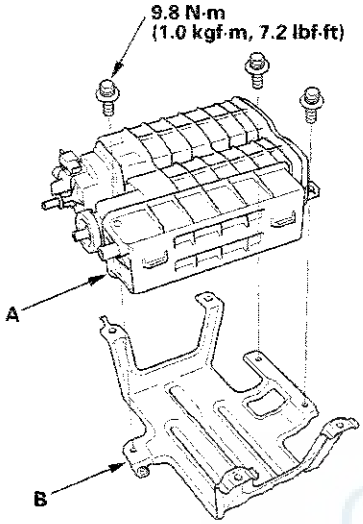

9. Remove the EVAP canister vent shut valve (A) and FTP sensor (B) from the canister (C).

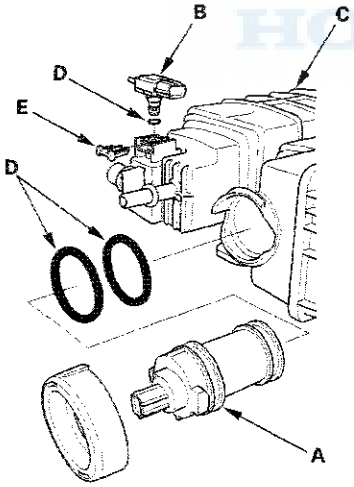

10. Reassemble the EVAP canister with new O-rings (D) and a new retainer (E), then install the EVAP canister bracket.

    NOTE: Do not coat the O-rings with oil.

11. Install the EVAP canister assembly to the body.

    NOTE: Attach the bracket arm (A) to the body as shown.

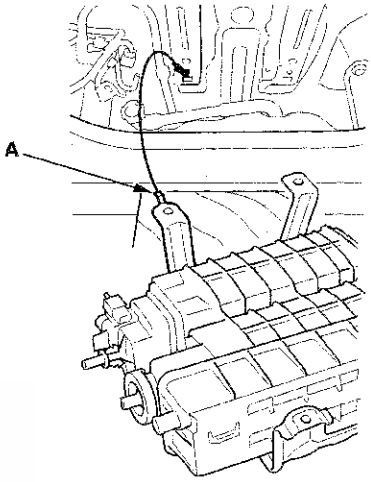

12. Install the parts in the reverse order of removal. Use new bolts when you install the rear subframe.

13. Check the wheel alignment (see page 18-5).

FTP Sensor Replacement

1. Remove the bolt (A), and disconnect the EVAP canister vent shut valve 2P connector (B), the FTP sensor 3P connector (C), and the hoses (D).

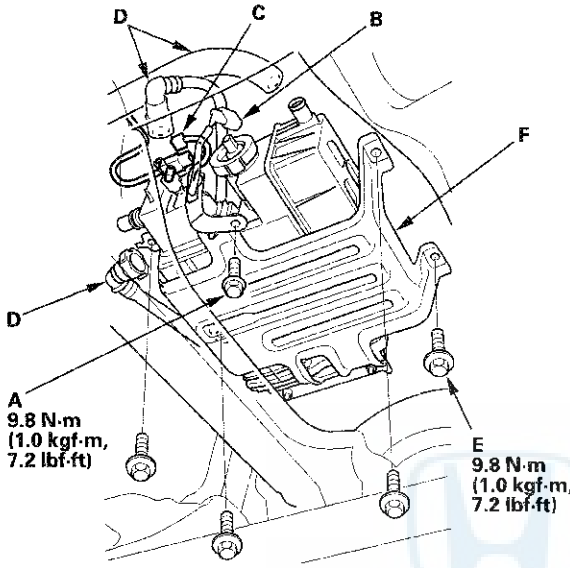

2. Remove the bolts (E), and move the EVAP canister assembly (F) to the rear.

3. Remove the FTP sensor (A).

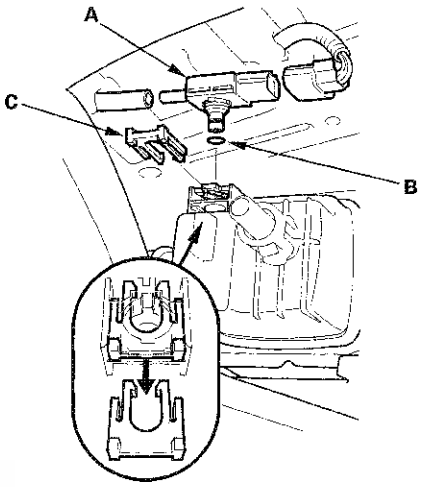

4. Install the parts in the reverse order of removal with a new O-ring (B) and a new retainer (C).

EVAP Canister Vent Shut Valve Replacement

1. Disconnect the EVAP canister vent shut valve 2P connector (A).

2. Remove the cap (B).

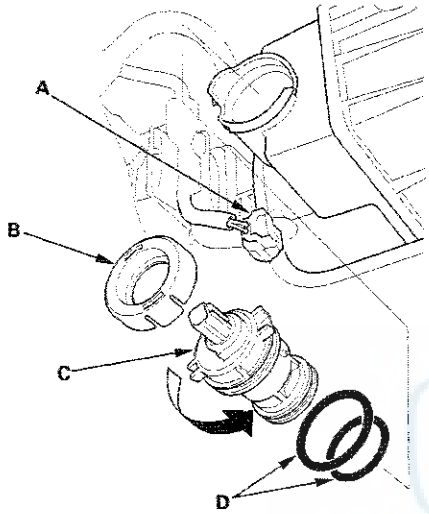

3. Remove the EVAP canister vent shut valve (C).

4. Install the parts in the reverse order of removal with new O-rings (D) and a new cap.

   NOTE: Do not coat the O-rings with oil.

EVAP Canister Purge Valve Replacement

1. Disconnect the EVAP canister purge valve 2P connector (A).

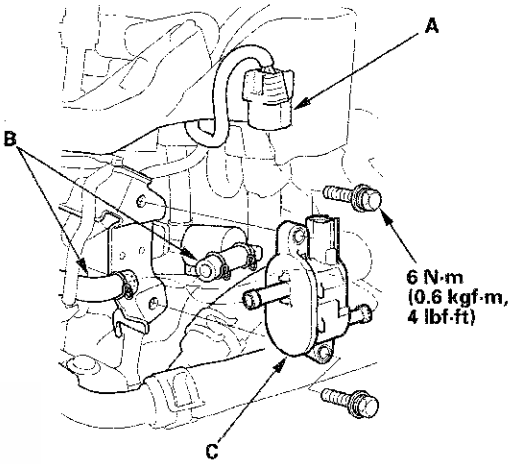

2. Disconnect the hoses (B), then remove the EVAP canister purge valve (C).

3. Install the parts in the reverse order of removal.

Navigation Tools: Click on the “Table of Contents” below, or use the Bookmarks to the left.

Transaxle

Clutch 12-1

Manual Transmission 13-1

Automatic Transmission 14-1

Driveline/Axle 16-1

HONDA

Navigation Tools: Click on the “Table of Contents” below, or use the Bookmarks to the left.

Clutch

Clutch

Special Tools 12-2
Component Location Index 12-3
System Description 12-4
Clutch Hydraulic System Bleeding 12-6
Clutch Pedal, Clutch Pedal Position Switch, and Clutch Interlock Switch Adjustment 12-7
Clutch Pedal Assembly Replacement 12-9
Clutch Master Cylinder Replacement 12-10
Slave Cylinder Replacement 12-12
Clutch Hose Replacement 12-14
Clutch Replacement 12-16

Special Tools

Ref. No.	Tool Number	Description	Qty
①	07JAF-PM7011A	Clutch Alignment Disc	1
②	07LAB-PV00100	Ring Gear Holder	1
③	07PAF-0020000	Clutch Alignment Tool Set	1
④	07PAF-0020370	Clutch Alignment Pilot, 21 mm	1
⑤	07ZAF-PR8A100	Clutch Alignment Shaft	1
⑥	07746-0010800	Bearing Driver Attachment, 22 x 24 mm	1
⑦	07749-0010000	Driver Handle, 15 x 135L	1
⑧	07936-3710100	Remover Handle	1
⑨	07936-371020A	Slide Hammer	1
⑩	07936-3710600	Bearing Remover Shaft	1

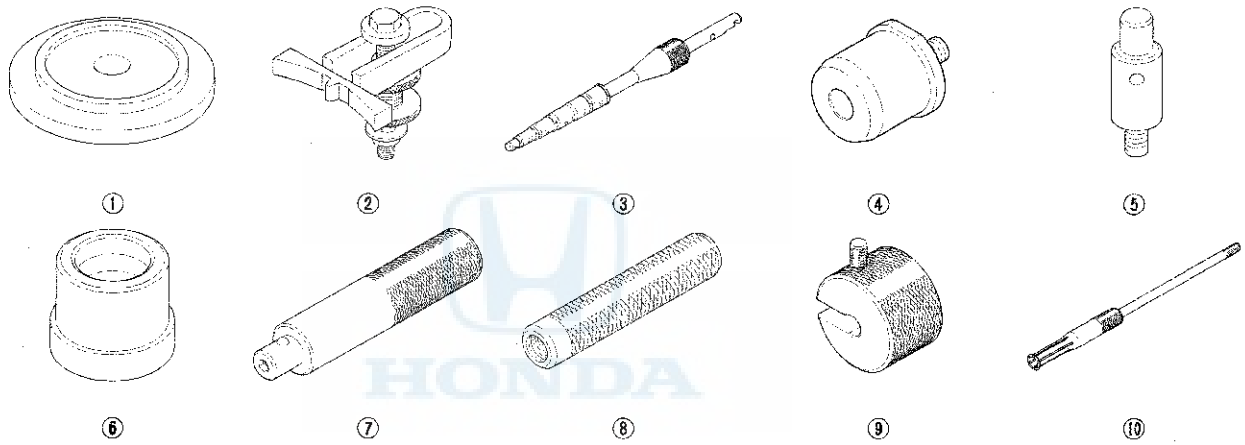

Component Location Index

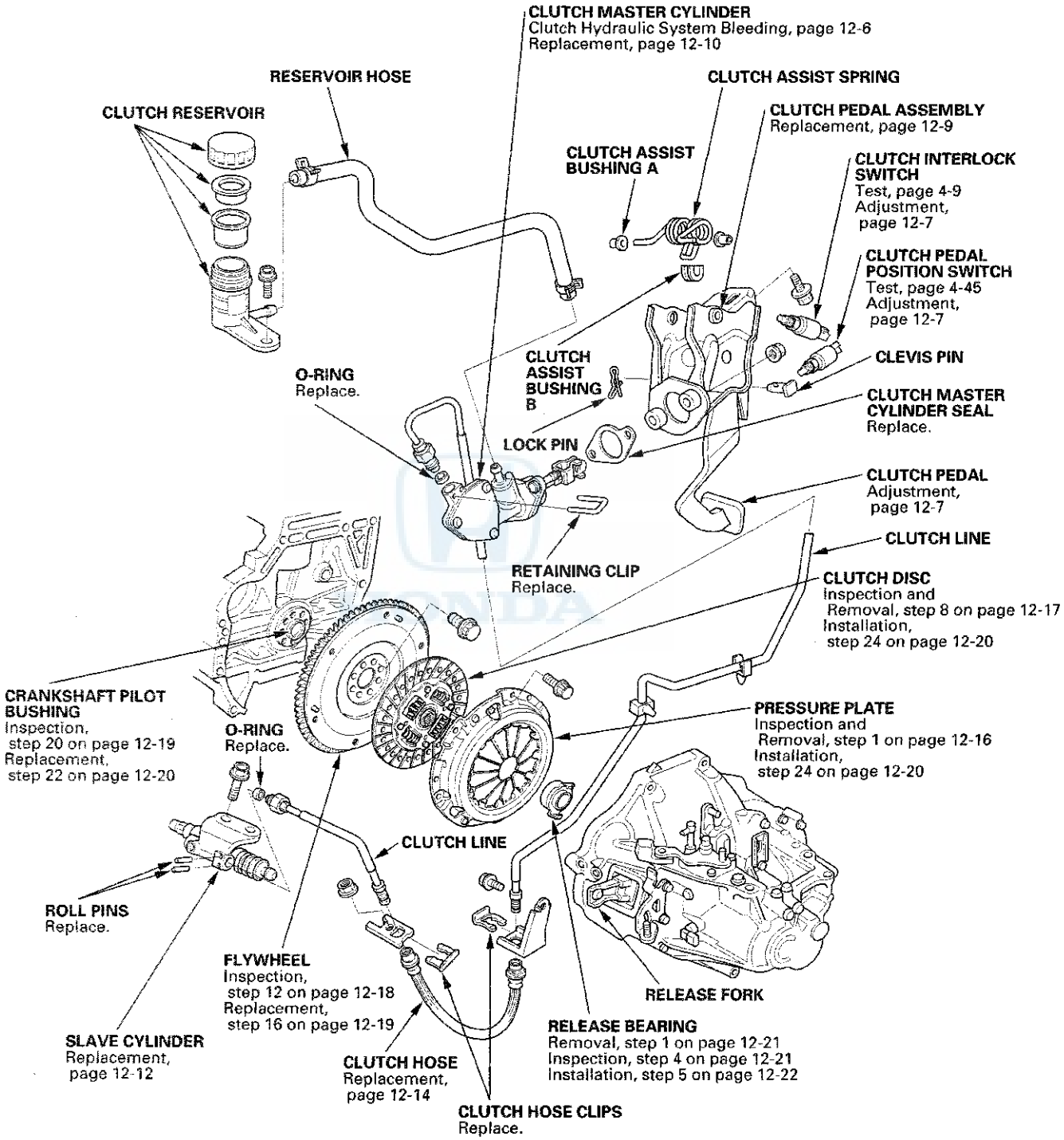

System Description

Delay Orifice Mechanism

Function
The delay orifice mechanism improves clutch operation by delaying the slave cylinder release speed when the clutch pedal is suddenly released. The delay orifice mechanism is built into the slave cylinder.

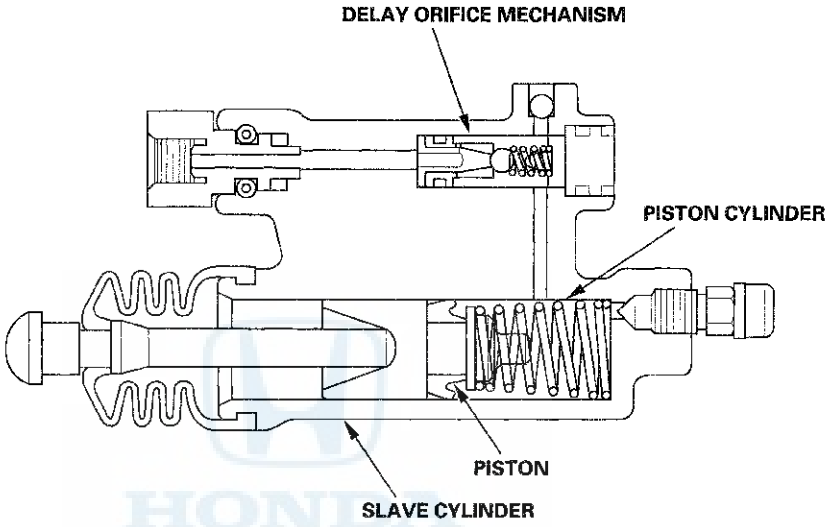

Fluid Flow Operation

When the clutch pedal is pressed, the fluid pressure from the master cylinder moves the one-way valve in the direction shown in the illustration. The fluid flows through two passages: the orifice part and the filter part. It then flows out to the piston cylinder to release the pressure plate and clutch disc joint.

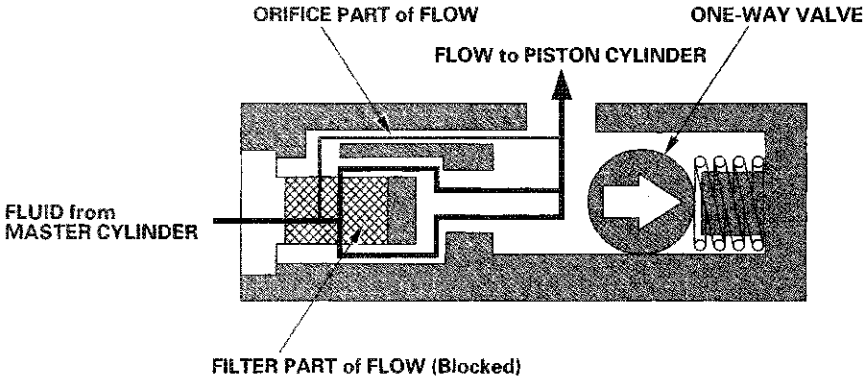

When the clutch pedal is released, the fluid pressure from the piston cylinder moves the one-way valve in the direction shown in the illustration. The one-way valve blocks the filter-part passage and delays the clutch release speed by returning the fluid to the master cylinder through only the orifice-part passage.

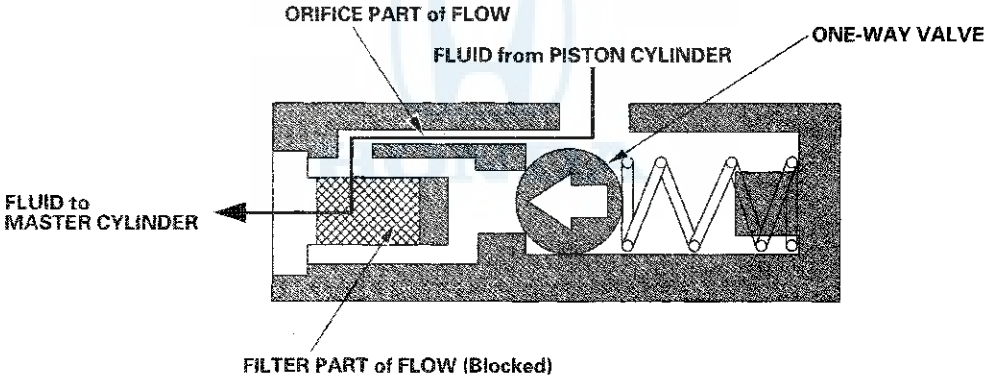

Clutch Hydraulic System Bleeding

NOTE:
- Do not reuse the drained fluid. Always use Honda DOT 3 Brake Fluid from an unopened container. Using a non-Honda brake fluid can cause corrosion and shorten the life of the system.
- Make sure no dirt or other foreign matter is allowed to contaminate the brake fluid.
- Do not spill brake fluid on the vehicle; it may damage the paint or plastic. If brake fluid does contact the paint or plastic, wash it off immediately with water.
- If may be necessary to limit the movement of the release fork with a block of wood to remove all the air from the system.
- Use fender covers to avoid damaging painted surfaces.

1. Do the battery removal procedure (see page 22-90).

2. Make sure the brake fluid level in the clutch reservoir (A) is at the MAX (upper) level line (B).

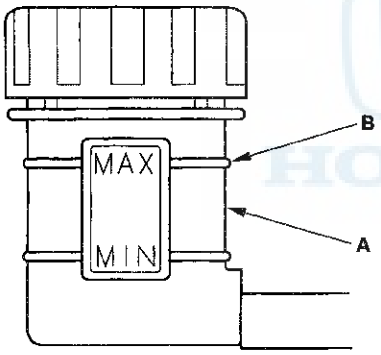

3. Attach one end of a clear tube to the bleeder screw (A), and put the other end into a container. Loosen the bleeder screw to allow air to escape from the system.

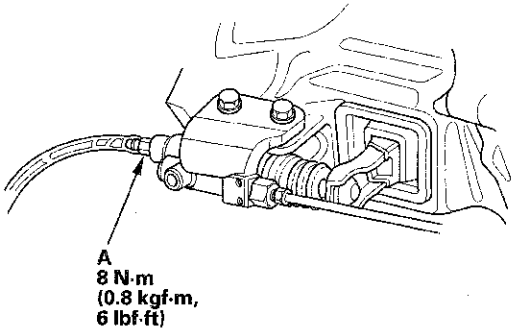

4. Make sure there is an adequate supply of fluid in the reservoir, then slowly push the clutch pedal all the way down. Before releasing the pedal, have an assistant temporarily tighten the bleeder screw. Loosen the bleeder screw, and push the clutch pedal down again. Repeat this step until no more bubbles appear at the clear tube.

   NOTE: Make sure the fluid level on the reservoir does not go below MIN.

5. Tighten the bleeder screw securely.

6. Refill the brake fluid in the reservoir to the MAX (upper) level line.

7. Do the battery installation procedure (see page 22-90).

Clutch Pedal, Clutch Pedal Position Switch, and Clutch Interlock Switch Adjustment

NOTE:
- For a cruise control problem, check the clutch pedal position switch (see page 4-45).
- For a clutch interlock operation problem, check the clutch interlock switch (see page 4-9).
- Remove the driver's floor mat before adjusting the clutch pedal.
- If there is no clearance between the master cylinder piston and pushrod, the release bearing will be held against the diaphragm spring, which can result in clutch slippage or other clutch problems.

1. Disconnect the clutch pedal position switch connector and the clutch interlock switch connector.

2. Loosen the clutch pedal position switch locknut (A), and back off the clutch pedal position switch (B) until it no longer touches the clutch pedal (C).

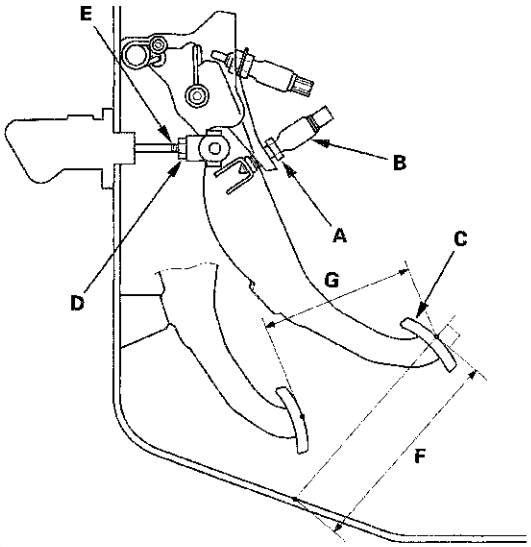

3. Loosen the clutch pushrod locknut (D), and turn the pushrod (E) in or out to get the specified height (F), and the stroke (G) at the clutch pedal. If adjusting the pushrod causes the clutch pedal to contact the clutch pedal position switch, back off the switch further.

F Clutch Pedal Height: 174 mm (6.85 in.)
G Clutch Pedal Stroke: 130—140 mm (5.12—5.51 in.)

(cont'd)

Clutch Pedal, Clutch Pedal Position Switch, and Clutch Interlock Switch Adjustment (cont'd)

4. Tighten the clutch pushrod locknut (A).

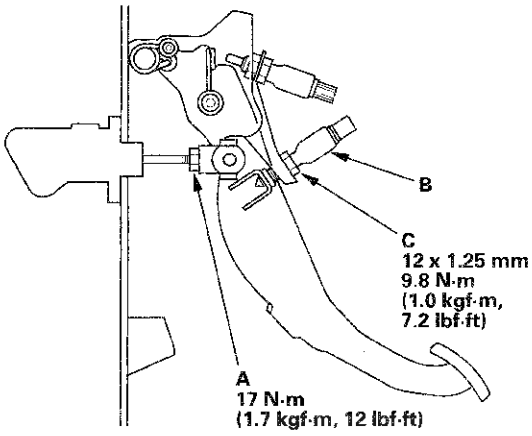

5. With the clutch pedal released, turn in the clutch pedal position switch (B) until it contacts the clutch pedal.

6. Turn in the clutch pedal position switch an additional 3/4 to 1 turn. Make sure the clutch pedal height didn't change.

7. While holding the clutch pedal position switch, tighten the locknut (C).

8. Loosen the clutch interlock switch locknut (A).

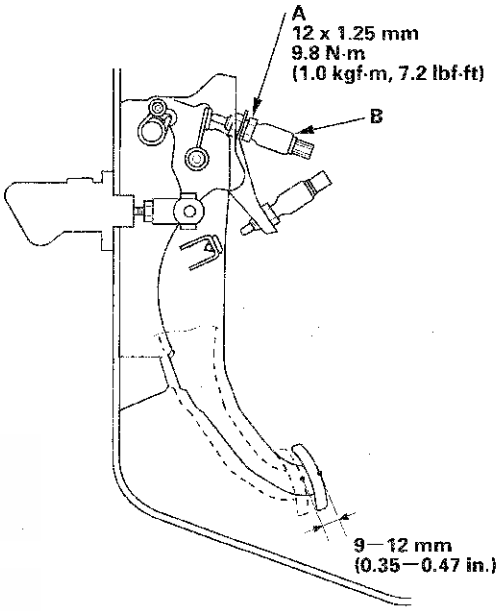

9. Fully press the clutch pedal to the floor, then release the clutch pedal 9—12 mm (0.35—0.47 in.) and hold it there.

10. Adjust the position of the clutch interlock switch (B) so the engine starts with the clutch pedal in this position.

11. While holding the clutch interlock switch, tighten the locknut.

12. Check the clutch operation.

13. Connect the clutch pedal position switch connector and the clutch interlock switch connector, then check the cruise control and clutch interlock operation.

Clutch Pedal Assembly Replacement

1. Disconnect the clutch pedal position switch connector (A) and the clutch interlock switch connector (B).

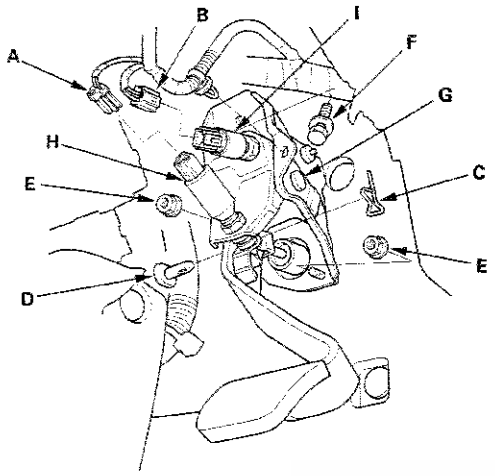

2. Pry out the lock pin (C), and pull the clevis pin (D) out of the clevis.

3. Remove the master cylinder mounting nuts (E) and clutch pedal mounting bolt (F).

4. Remove the clutch pedal assembly (G).

5. Remove the clutch pedal position switch (H) and the clutch interlock switch (I).

6. Loosely install the clutch pedal position switch (A) and the clutch interlock switch (B).

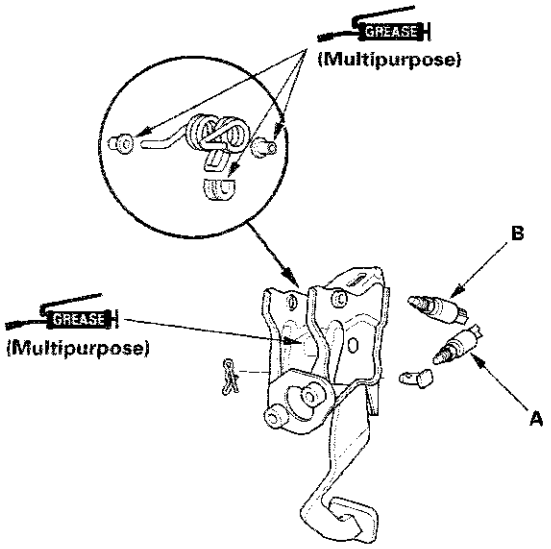

7. Install the clutch pedal assembly (A).

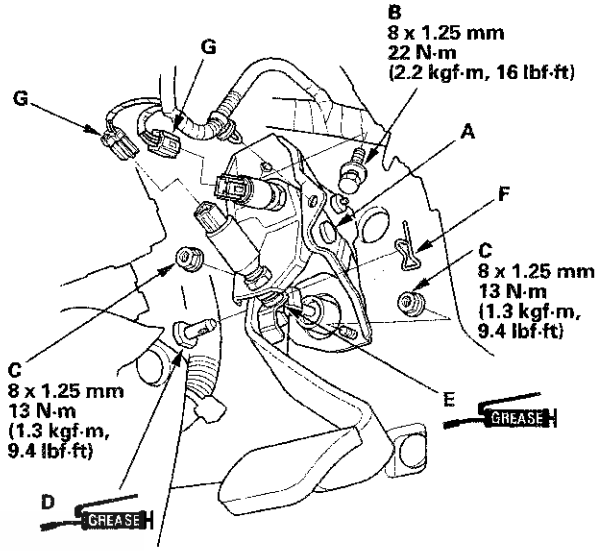

8. Install the clutch pedal mounting bolt (B) and the master cylinder mounting nuts (C).

9. Apply multipurpose grease to the clevis pin (D) and the mating surfaces (E) of the clevis and the pedal. Slide the clevis pin into the clevis, then install a lock pin (F).

10. Adjust the clutch pedal, the clutch pedal position switch, and the clutch interlock switch (see page 12-7).

    NOTE: Connect the switch connectors (G) after adjusting them.

11. Check the clutch operation.

Clutch Master Cylinder Replacement

NOTE:
- Use fender covers to avoid damaging painted surfaces.
- Do not spill brake fluid on the vehicle; it may damage the paint or plastic. If brake fluid does contact the paint or plastic, wash it off immediately with water.

1. Remove and discard the brake fluid from the clutch master cylinder reservoir with a syringe or other suitable device.

2. Pry out the lock pin (A), and pull the clevis pin (B) out of the clevis. Remove the master cylinder mounting nuts (C).

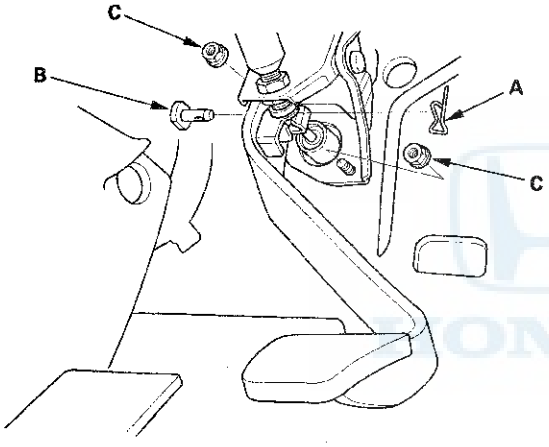

3. Remove the reservoir mounting bolt (A) and the retaining clip (B) then disconnect the clutch line (C) from the clutch master cylinder (D), and remove the O-ring (E). Plug or wrap the end of the clutch line with a clean shop towel to prevent brake fluid from coming out.

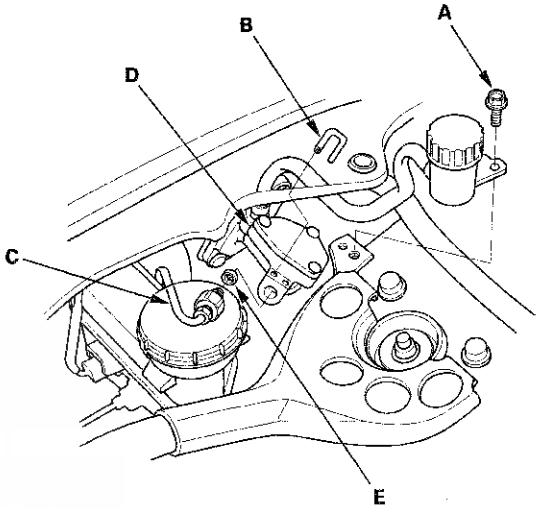

4. Remove the master cylinder (A) and clutch master cylinder seal (B).

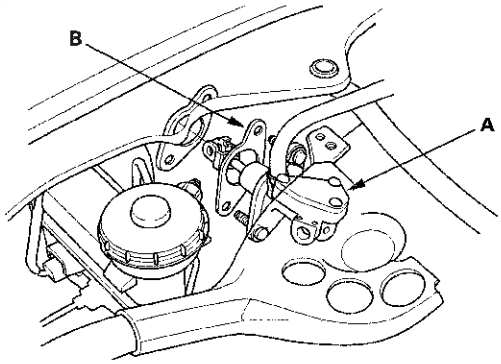

5. Install a new master cylinder seal (A), then install the master cylinder (B).

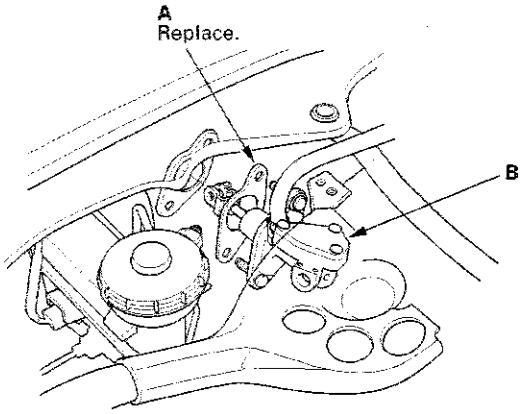

6. Install a new O-ring (A) on the clutch line (B), then install the clutch line in the clutch master cylinder (C) with a new retaining clip (D). Install the master cylinder reservoir mounting bolt (E).

NOTE:
- Apply the silicone grease (P/N 08C30-B0234M) on the O-ring and the end of the clutch line.
- Make sure not to get any silicone grease on the terminal part of the connectors and switches, especially if you have silicone grease on your hands or gloves.

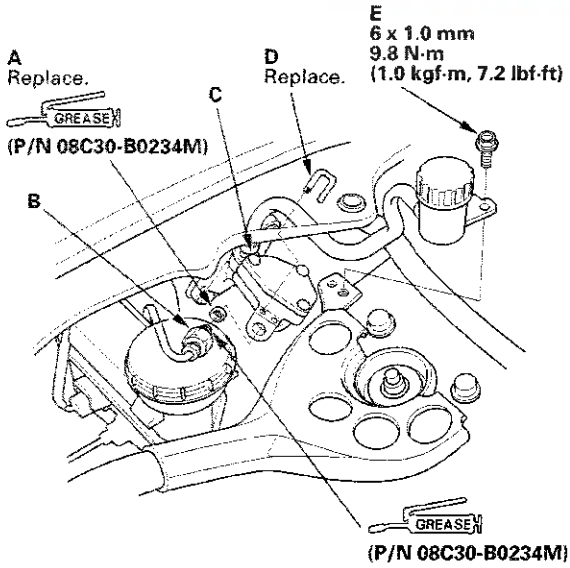

7. To prevent the retaining clip (A) from coming off, pry apart the tip of the clip (B) with a screwdriver.

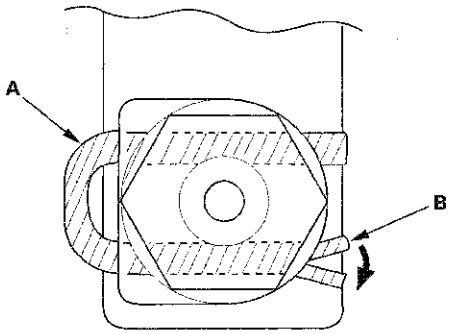

8. Make sure the hose clamps (A) are positioned on the master cylinder (B) and reservoir (C) as shown.

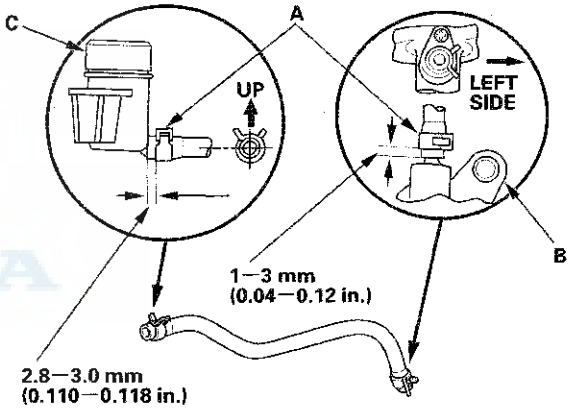

(cont'd)

Clutch Master Cylinder Replacement (cont'd)

9. Install the master cylinder mounting nuts (A).

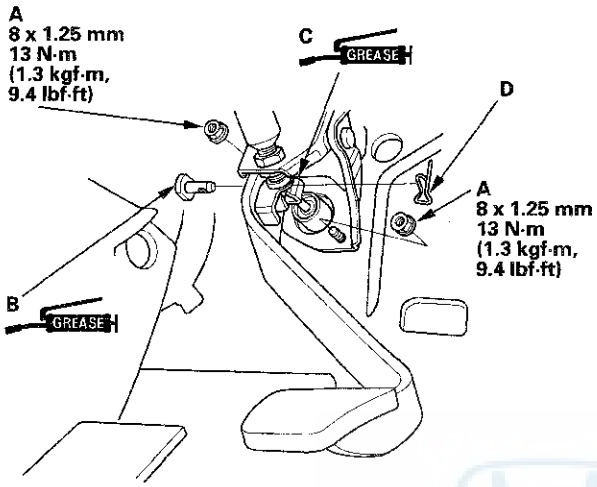

10. Apply multipurpose grease to the clevis pin (B) and the mating surfaces (C) of the clevis and the pedal. Slide the clevis pin into the clevis, then install a lock pin (D).

11. Bleed the clutch hydraulic system (see page 12-6).

12. Adjust the clutch pedal, the clutch pedal position switch, and the clutch interlock switch (see page 12-7).

13. Check the clutch operation, and check for leaks.

14. Test-drive the vehicle.

Slave Cylinder Replacement

NOTE:
- Use fender covers to avoid damaging painted surfaces.
- Do not spill brake fluid on the vehicle; it may damage the paint or plastic. If brake fluid does contact the paint or plastic, wash it off immediately with water.
- Make sure not to get any silicone grease on the terminal part of the connectors and switches, especially if you have silicone grease on your hands or gloves.

1. Do the battery removal procedure (see page 22-90).

2. Remove the mounting bolts (A), the bracket mounting nut (B), and the slave cylinder (C).

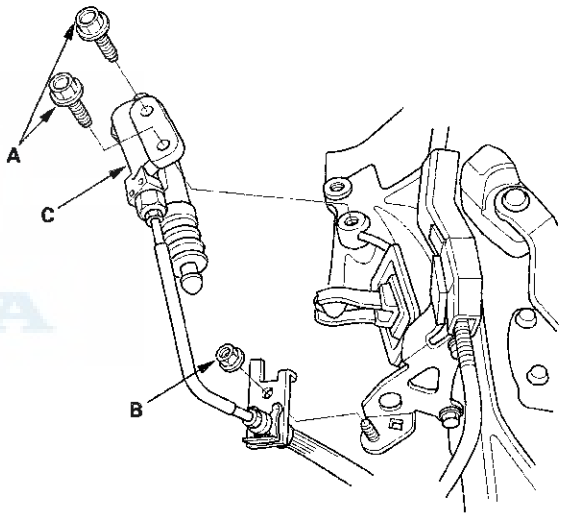

3. Remove the roll pins (A). Disconnect the clutch line (B), and remove the O-ring (C). Plug or wrap the end of the clutch line with a clean shop towel to prevent brake fluid from coming out.

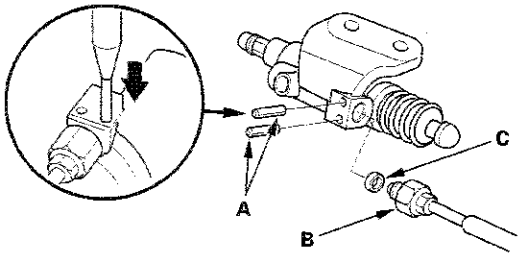

4. Install a new O-ring (A) on the clutch line (B), install the clutch line in the slave cylinder (C), and install the new roll pins (D).

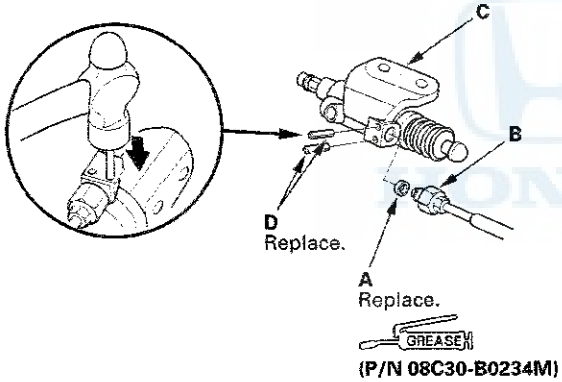

5. Pull back the boot (A), and apply silicone grease (P/N 08C30-B0234M) to the boot and slave cylinder. Reinstall the boot.

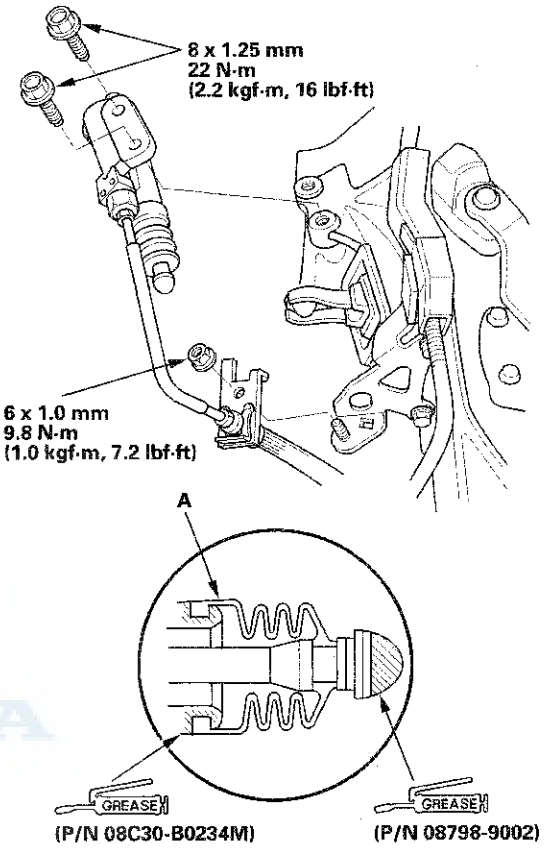

6. Apply a light coat of super high temp urea grease (P/N 08798-9002) to the end of the slave cylinder pushrod. Tighten the slave cylinder mounting bolts and the bracket mounting nut.

7. Bleed the clutch hydraulic system (see page 12-6).

8. Check the clutch operation, and check for leaks.

9. Do the battery installation procedure (see page 22-90).

10. Test-drive the vehicle.

Clutch Hose Replacement

NOTE:
- Replace the clutch hose it is twisted, cracked, or if it leaks.
- Use fender covers to avoid damaging painted surfaces.
- Do not spill brake fluid on the vehicle; it may damage the paint or plastic; if brake fluid does contact the paint or plastic, wash it off immediately water.

1. Do the battery removal procedure (see page 22-90).

2. Remove the battery base bolts (A), loosen the two bolts (B), remove the cable clamp (C), and the harness bracket bolt (D), then remove the battery base (E).

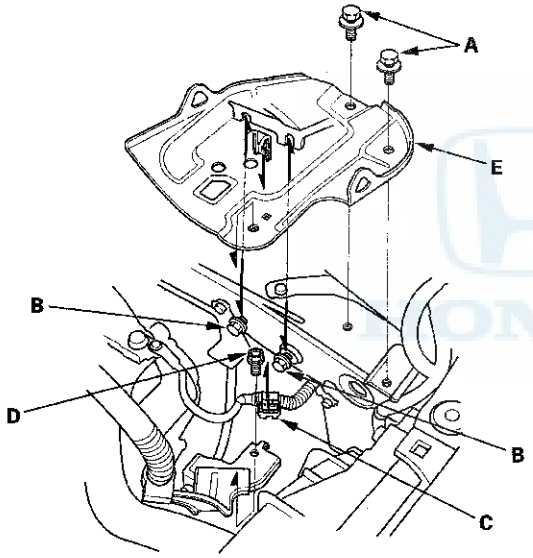

3. Disconnect the clutch hose (A) from the clutch lines (B).

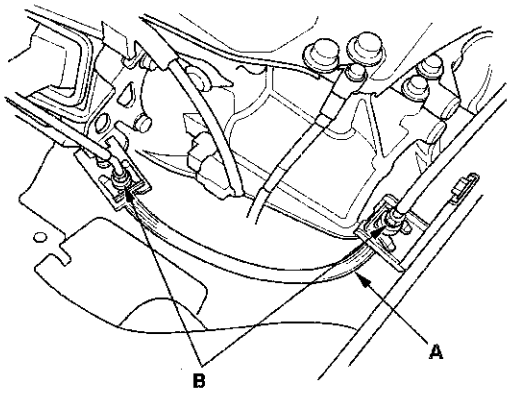

4. Remove and discard the clutch hose clips (A) from the clutch hose (B).

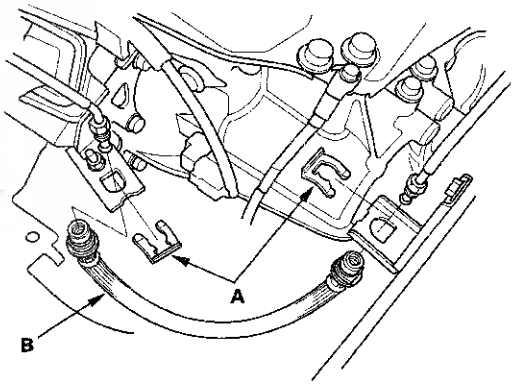

5. Remove the clutch hose from clutch hose brackets.

6. Install the clutch hose (A) into the clutch hose brackets with the new clutch hose clips (B).

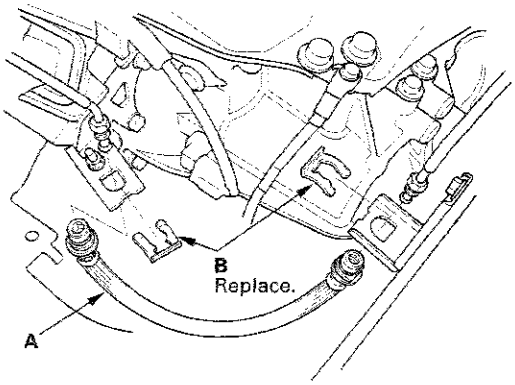

7. Connect the clutch lines (A) to the clutch hose (B).

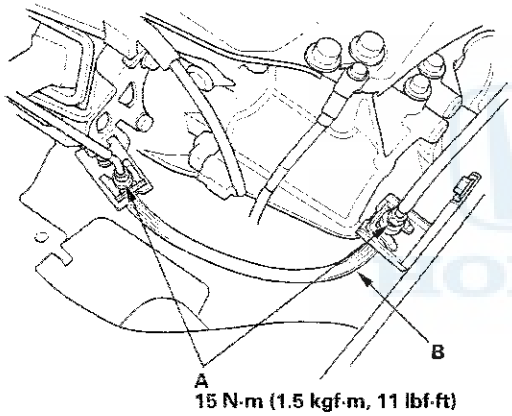

8. Bleed the clutch hydraulic system (see page 12-6).

9. Do the following checks:

   - Check the clutch hose and line joint for leaks, and tighten if necessary.
   - Check the clutch hose for interference and twisting.

10. Install the battery base (A) and the cable clamp (B).

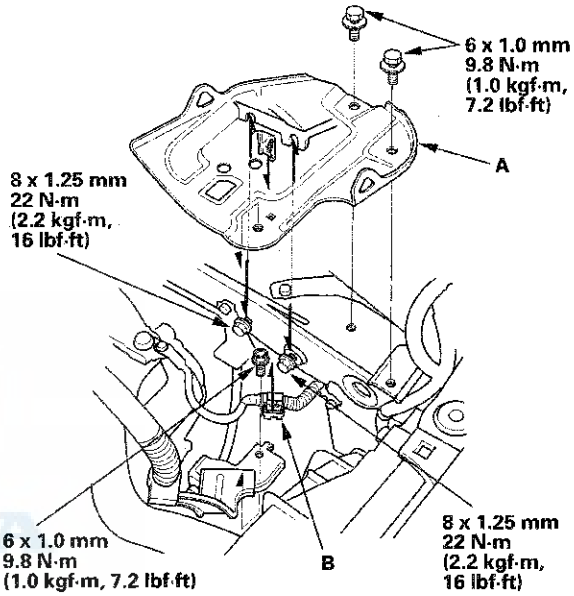

11. Do the battery installation procedure (see page 22-90).

12. Test-drive the vehicle.

Clutch Replacement

Special Tools Required
- Clutch alignment disc 07JAF-PM7011A
- Ring gear holder 07LAB-PV00100
- Clutch alignment tool set 07PAF-0020000
- Clutch alignment pilot, 21 mm 07PAF-0020370
- Clutch alignment shaft 07ZAF-PR8A100
- Bearing driver attachment, 22 x 24 mm 07746-0010800
- Driver handle, 15 x 135L 07749-0010000
- Remover handle 07936-3710100
- Bearing remover shaft 07936-3710600
- Slide hammer 07936-371020A

Engine Side

Pressure Plate Inspection and Removal

1. Remove the transmission (see page 13-7).

2. Check the evenness of the height of the diaphragm spring fingers using the clutch alignment disc (A), clutch alignment shaft (B), remover handle (C), and a feeler gauge (D). If the height difference is more than the service limit, replace the pressure plate.

   Standard (New): 0.6 mm (0.02 in.) max.
   Service Limit: 0.8 mm (0.03 in.)

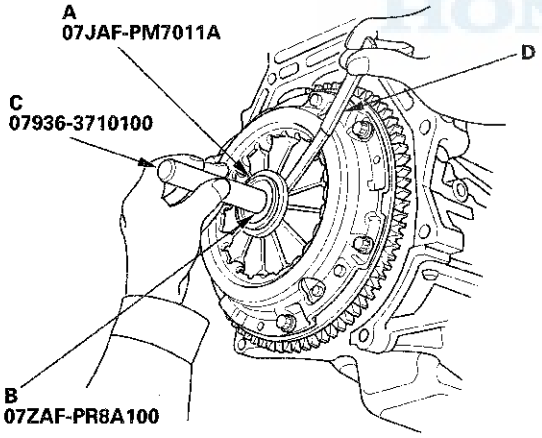

3. Install the ring gear holder (A), the clutch alignment tool set (B), and the 21 mm clutch alignment pilot (C).

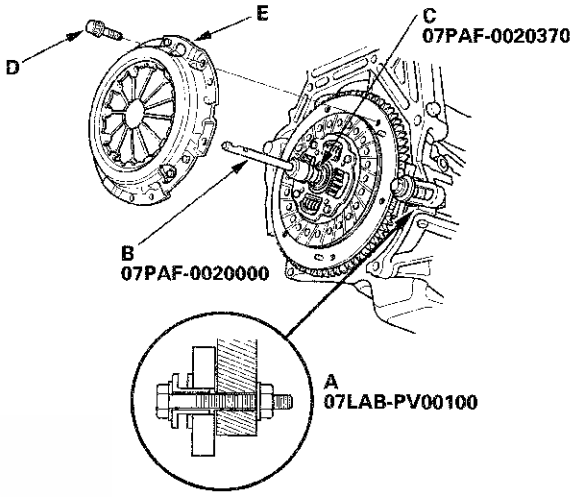

4. To prevent warping, loosen the pressure plate mounting bolts (D) in a crisscross pattern in several steps, then remove the pressure plate (E).

5. Inspect the fingers of the diaphragm spring (A) for wear at the release bearing contact area.

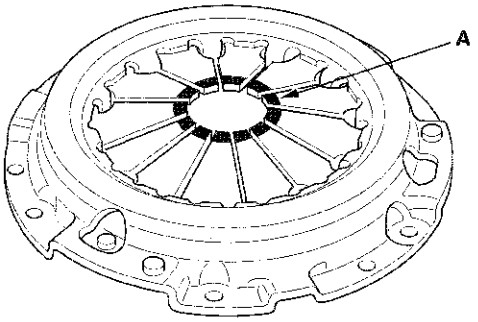

6. Inspect the pressure plate surface (A) for wear, cracks, and burning.

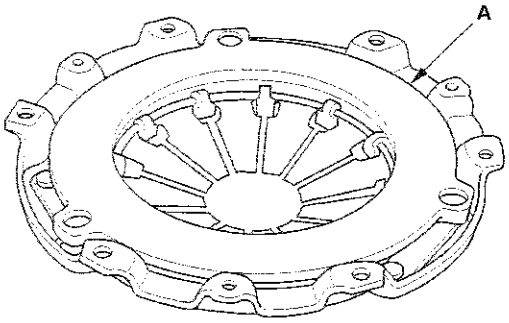

7. Inspect for warpage using a straight edge (A) and a feeler gauge (B). Measure across the pressure plate (C). If the most measurement difference is more than the service limit, replace the pressure plate.

Standard (New): 0.03 mm (0.001 in.) max.
Service Limit: 0.15 mm (0.006 in.)

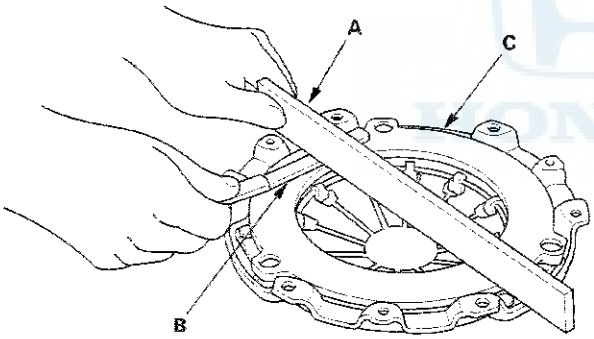

Clutch Disc Inspection and Removal

8. Remove the clutch disc (A), the clutch alignment tool set (B), and the 21 mm clutch alignment pilot (C).

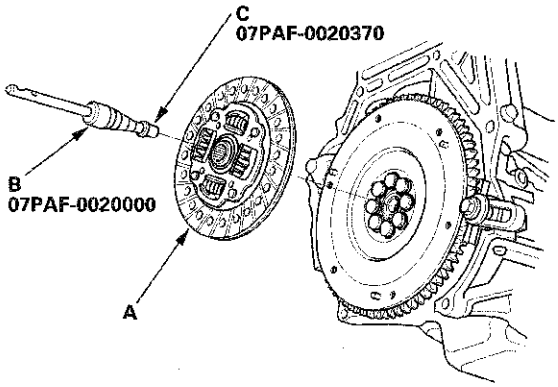

9. Inspect the lining of the clutch disc for signs of slippage or oil. If the clutch disc looks burnt or is oil soaked, replace the clutch disc. If the clutch disc is oil soaked, find and repair the source of the oil leak.

10. Measure the clutch disc thickness. If the measurement is less than the service limit, replace the clutch disc.

Standard (New): 7.30—7.90 mm (0.287—0.311 in.)
Service Limit: 6.0 mm (0.24 in.)

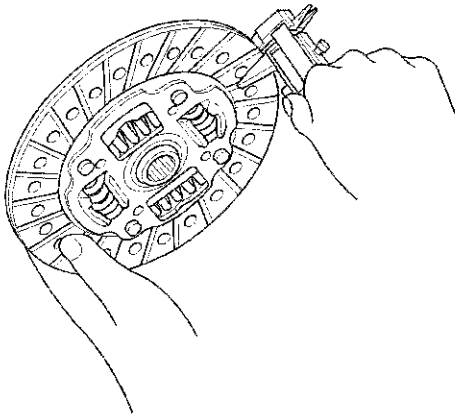

(cont'd)

Clutch Replacement (cont'd)

11. Measure the depths of the rivets from the clutch disc lining surface (A) to the rivets (B) on both sides. If the measurement is less than the service limit, replace the clutch disc.

Standard (New):	**1.15—1.75 mm (0.045—0.069 in.)**
Service Limit:	**0.7 mm (0.03 in.)**

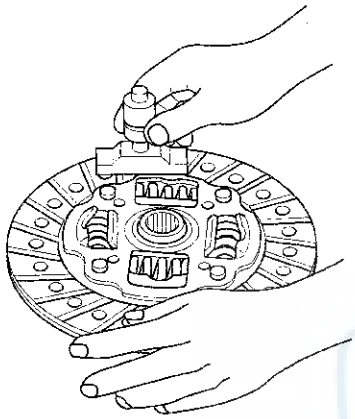

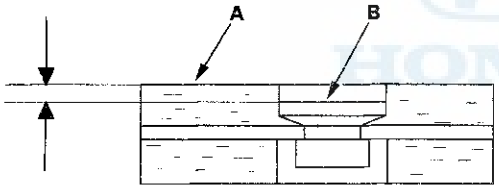

Flywheel Inspection

12. Remove the ring gear holder.

13. Inspect the ring gear teeth for wear and damage.

14. Inspect the clutch disc mating surface on the flywheel for wear, cracks, and burning.

15. Measure the flywheel (A) runout using a dial indicator (B). Through at least two full turns with pushing against the flywheel each time you turn it to take up the crankshaft thrust washer clearance. If the measurement is not within the standard, replace the flywheel, and recheck the runout; then go to step 16.

Standard (New):	**0.05 mm (0.002 in.) max.**
Service Limit:	**0.15 mm (0.006 in.)**

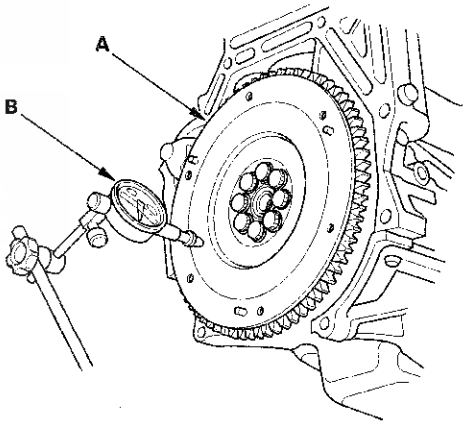

Flywheel Replacement

16. Install the ring gear holder (A).

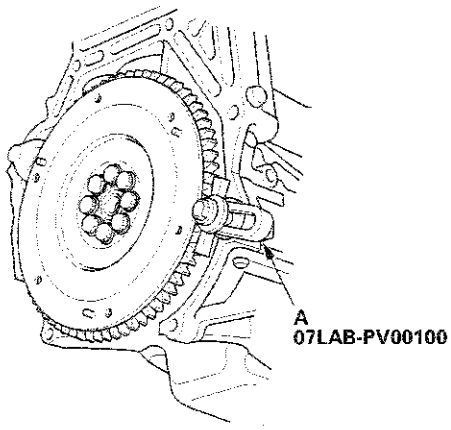

17. Loosen the flywheel mounting bolts in a crisscross pattern in several steps. Remove the bolts, then remove the flywheel and the ring gear holder.

18. Install the flywheel on the crankshaft, and install the mounting bolts finger-tight.

19. Install the ring gear holder (A), then torque the flywheel mounting bolts (B) in a crisscross pattern in several steps.

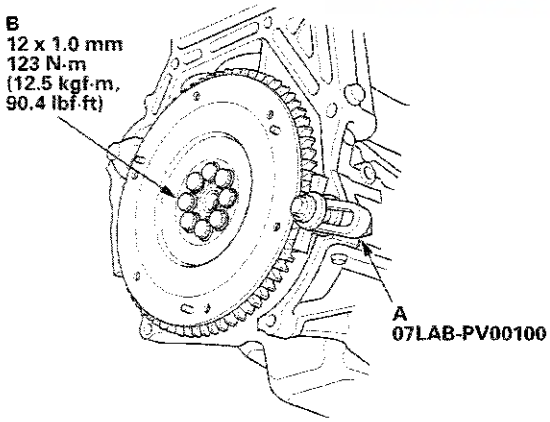

Crankshaft Pilot Bushing Inspection

20. Inspect the crankshaft pilot bushing for wear and damage.

21. Inspect the inside surface of the crankshaft pilot bushing with your finger. If the crankshaft pilot bushing is not smooth, replace it; then go to step 22.

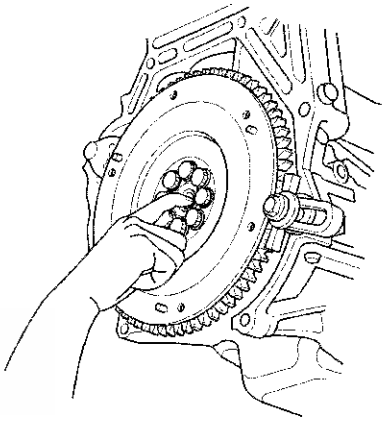

(cont'd)

Clutch Replacement (cont'd)

Crankshaft Pilot Bushing Replacement

22. Remove the crankshaft pilot bushing (A) using the slide hammer (B), the remover handle (C), and the bearing remover shaft (D).

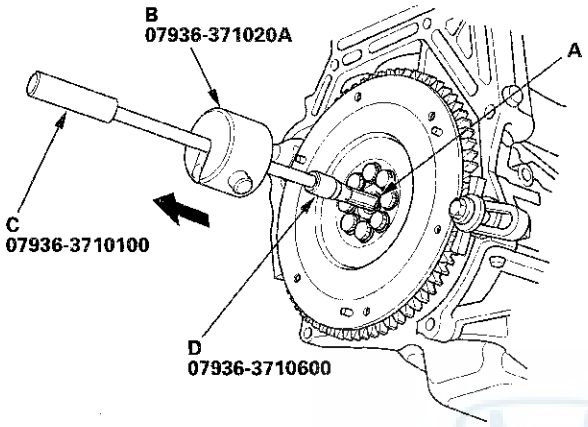

23. Install a new crankshaft pilot bushing (A) into the crankshaft using the 15 x 135L driver handle (B) and the 22 x 24 mm bearing driver attachment (C).

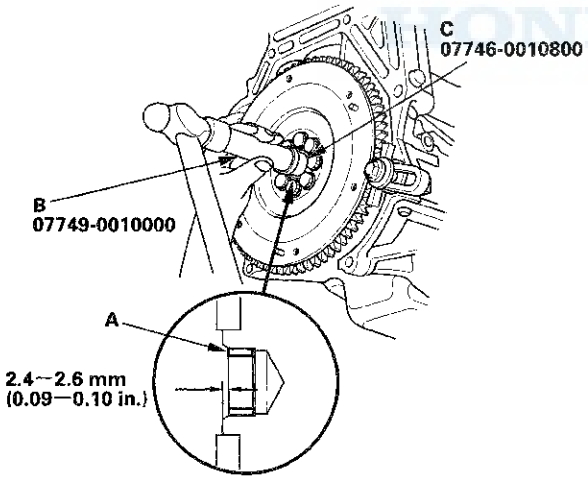

Clutch Disc and Pressure Plate Installation

24. Temporarily install the clutch disc onto the splines of the transmission mainshaft. Make sure the clutch disc slides freely on the mainshaft.

25. Apply a light coat of super high temp urea grease (P/N 08798-9002) to the crankshaft pilot bushing (A).

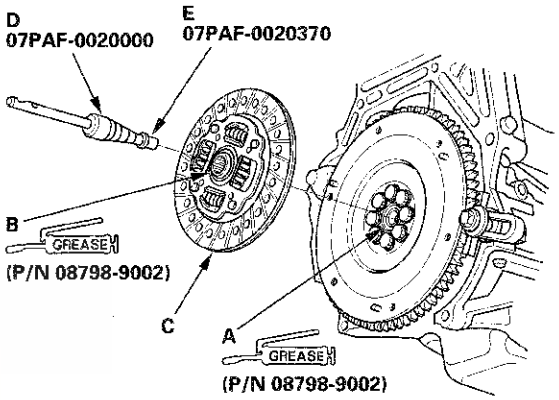

26. Apply super high temp urea grease (P/N 08798-9002) to the splines (B) of the clutch disc (C), then install the clutch disc using the clutch alignment tool set (D), and the 21 mm clutch alignment pilot (E).

27. Install the pressure plate (A) and the mounting bolts (B) finger-tight.

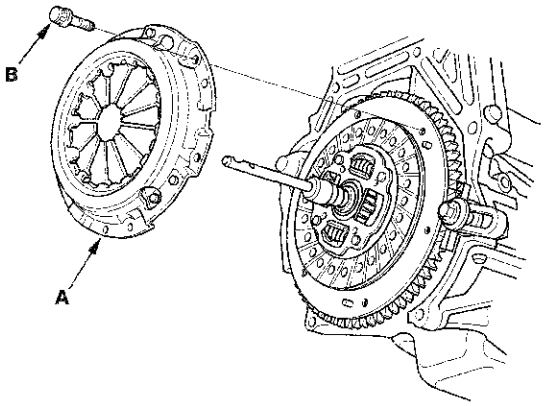

28. Torque the mounting bolts (A) in a crisscross pattern. Tighten the bolts in several steps to prevent warping the diaphragm spring.

Specified Torque: 25 N·m (2.6 kgf·m, 19 lbf·ft)

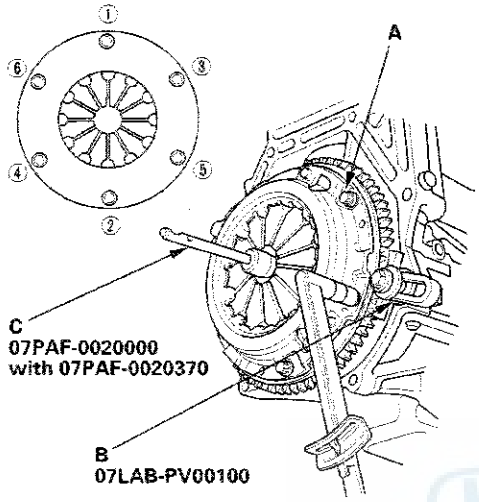

29. Remove the ring gear holder (B), the clutch alignment tool set (C), and the 21 mm clutch alignment pilot.

30. Make sure the diaphragm spring fingers are all the same height.

31. Do the release bearing inspection, and replace it if necessary.

32. Install the transmission (see page 13-16).

Transmission Side

Release Bearing Removal

1. Remove the transmission (see page 13-7).

2. Remove the release fork boot (A) from the clutch housing (B).

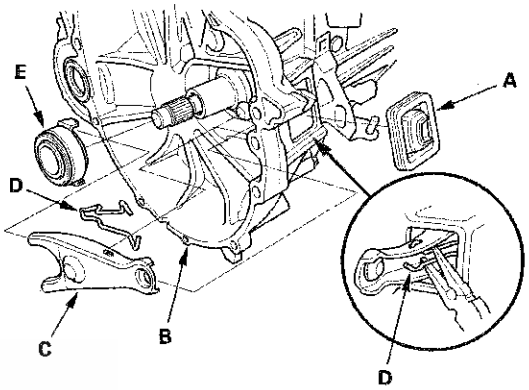

3. Remove the release fork (C) from the clutch housing by squeezing the release fork set spring (D) with pliers. Remove the release bearing (E).

Release Bearing Inspection

4. Check the play of the release bearing by spinning it by hand. If there is excessive play or noise, replace the release bearing.

   NOTE: The release bearing is packed with grease. Do not wash it in solvent.

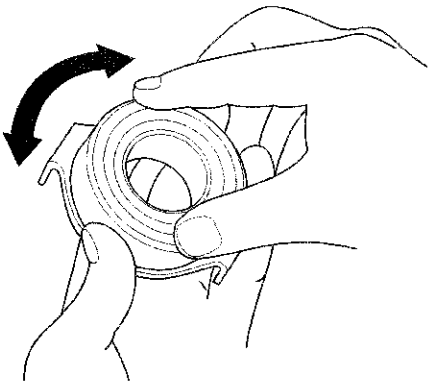

(cont'd)

Clutch Replacement (cont'd)

Release Bearing Installation

5. Apply super high temp urea grease (P/N 08798-9002) to the release fork (A), the release fork bolt (B), the release bearing (C), and the release bearing guide (D) in the shaded areas, then set the release fork set spring (E).

   NOTE: Replace the release fork bolt if necessary.

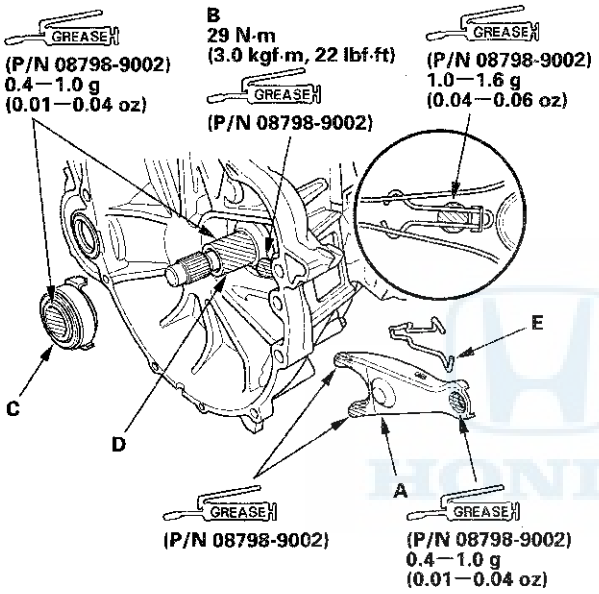

6. With the release fork (A) slid between the release bearing pawls (B), install the release bearing on the mainshaft while inserting the release fork through the hole (C) in the clutch housing.

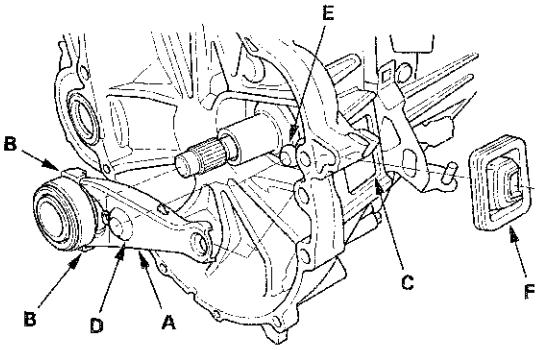

7. Align the detent (D) of the release fork with the release fork bolt (E), then press the detent of the release fork over the release fork bolt squarely.

8. Install the release fork boot (F). Make sure the boot seals around the release fork and clutch housing.

9. Move the release fork (A) right and left to make sure that it fits properly against the release bearing (B) and that the release bearing slides smoothly. Wipe off any excess grease.

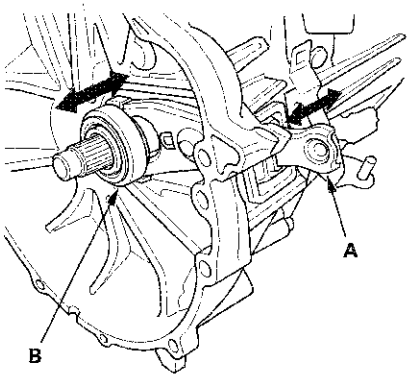

10. Install the transmission (see page 13-16).

Navigation Tools: Click on the “Table of Contents” below, or use the Bookmarks to the left.

Manual Transmission

Manual Transmission

Special Tools 13-2
Component Location Index 13-3
Symptom Troubleshooting Index 13-4
Transmission Fluid Inspection and Replacement 13-5
Back-up Light Switch Test 13-6
Transmission Removal 13-7
Transmission Installation 13-16
Transmission Disassembly 13-25
Reverse Shift Fork Clearance Inspection 13-30
Change Lever Clearance Inspection 13-30
Change Lever Assembly Disassembly/Reassembly ... 13-31
Shift Fork Clearance Inspection 13-32
Shift Fork Disassembly/Reassembly ... 13-33
Mainshaft Assembly Clearance Inspection 13-34
Mainshaft Disassembly 13-36
Mainshaft Inspection 13-37
Mainshaft Reassembly 13-39
Countershaft Assembly Clearance Inspection 13-43
Countershaft Disassembly 13-45
Countershaft Inspection 13-46
Countershaft Reassembly 13-47
Synchro Sleeve and Hub Inspection and Reassembly 13-53
Synchro Ring and Gear Inspection 13-53
Mainshaft Bearing and Oil Seal Replacement 13-55
Countershaft Bearing Replacement 13-56
Mainshaft Thrust Clearance Adjustment 13-57
Transmission Reassembly 13-60
Gearshift Mechanism Replacement 13-64
Shift Lever Housing Replacement 13-65

M/T Differential

Component Location Index 13-67
Backlash Inspection 13-68
Differential Carrier, Final Driven Gear Replacement 13-68
Carrier Bearing Replacement 13-69
Oil Seal Replacement 13-70
Differential Thrust Clearance Adjustment 13-71

Special Tools

Ref. No.	Tool Number	Description	Qty
*①	07GAJ-PG20110	Catch Adapter	1
*②	07GAJ-PG20130	Base Adapter	1
③	07JAD-PL90100	Oil Seal Driver, 65 mm	1
④	07NAD-P20A100	Oil Seal Driver Attachment	1
⑤	070AG-SJAA10S	Subframe Alignment Pin	1
**⑥	07736-A01000B	Adjustable Bearing Puller, 20—40 mm	1
⑦	07746-0010300	Bearing Driver Attachment, 42 x 47 mm	1
⑧	07746-0030100	Inner Driver Handle, 40 mm	1
⑨	07746-0030300	Inner Bearing Driver Attachment, 30 mm	1
⑩	07749-0010000	Driver Handle, 15 x 135L	1

*: Part of Mainshaft Inspection Tool Set, 07GAJ-PG20102.

**: Must be used with commercially available 3/8"-16 UNF Slide Hammer.

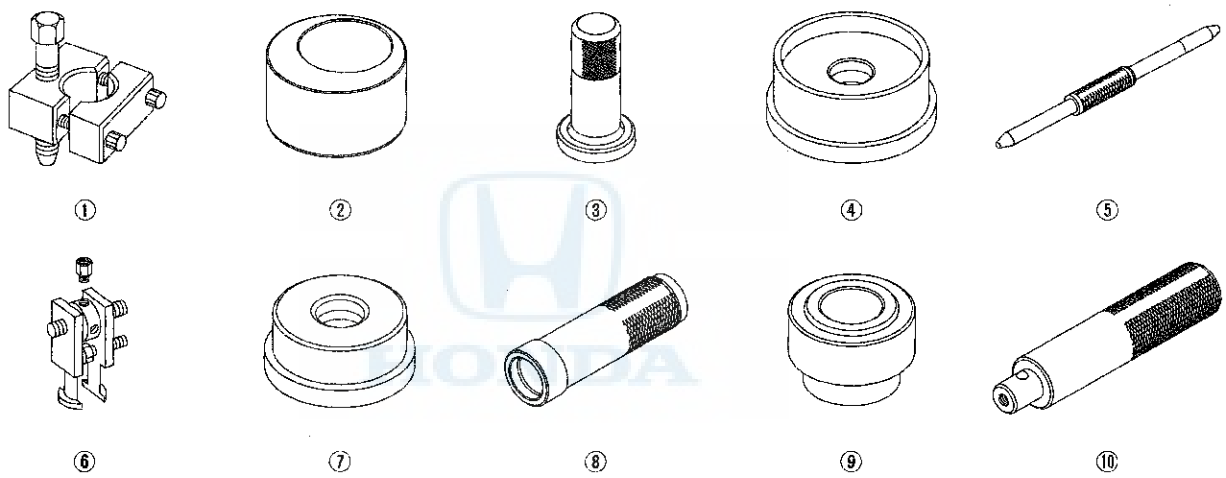

Component Location Index

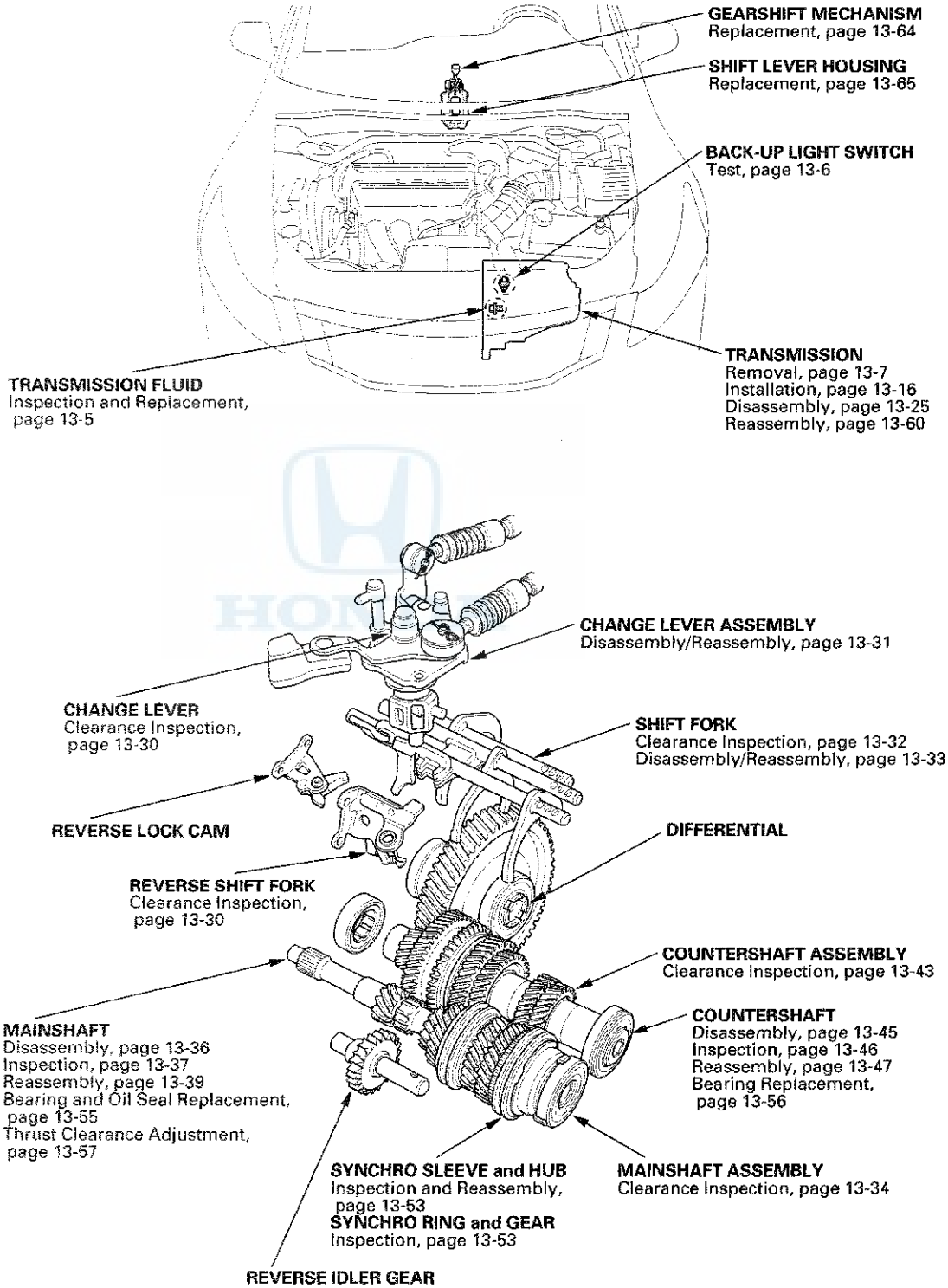

Symptom Troubleshooting Index

Symptom	Diagnostic procedure
Hard to shift into 1st gear	1. Check and/or replace the MTF (see page 13-5). 2. Check the clutch (see page 12-16). 3. Check the change lever assembly (see page 13-30). 4. Check the 1st synchro ring and 1st gear (see page 13-53). 5. Check the 1st/2nd synchro sleeve and hub (see page 13-53).
Hard to shift into 2nd gear	1. Check and/or replace the MTF (see page 13-5). 2. Check the change lever assembly (see page 13-30). 3. Check the 2nd synchro ring and 2nd gear (see page 13-53). 4. Check the 1st/2nd synchro sleeve and hub (see page 13-53).
Hard to shift into 3rd gear	1. Check and/or replace the MTF (see page 13-5). 2. Check the change lever assembly (see page 13-30). 3. Check the 3rd synchro ring and 3rd gear (see page 13-53). 4. Check the 3rd/4th synchro sleeve and hub (see page 13-53).
Hard to shift into 4th gear	1. Check and/or replace the MTF (see page 13-5). 2. Check the change lever assembly (see page 13-30). 3. Check the 4th synchro ring and 4th gear (see page 13-53). 4. Check the 3rd/4th synchro sleeve and hub (see page 13-53).
Hard to shift into 5th gear	1. Check and/or replace the MTF (see page 13-5). 2. Check the change lever assembly (see page 13-30). 3. Check the 5th synchro ring and 5th gear (see page 13-53). 4. Check the 5th synchro sleeve and hub (see page 13-53).
Hard to shift into reverse	1. Check and/or replace the MTF (see page 13-5). 2. Check the clutch (see page 12-16). 3. Check the change lever assembly (see page 13-30). 4. Check the reverse shift fork and reverse idler gear (see page 13-30). 5. Check reverse gears.
Noise from the transmission	1. Check and/or replace the MTF (see page 13-5). 2. Check the MTF level (unfilled or in surplus the transmission with the MTF). 3. Check the transmission gears. 4. Check the transmission bearings. 5. Check the differential carrier, the final driven gear, and the carrier bearings.
Shift lever does not operate smoothly	1. Check and/or replace the MTF (see page 13-5). 2. Check the shift cables and their joints (see page 13-64). 3. Check the shift lever housing with the shift lever shaft.
Transmission jumps out of gear	1. Check and/or replace the MTF (see page 13-5). 2. Check the detent ball springs (see page 13-25). 3. Check the teeth of the synchro rings and the gears (see page 13-53). 4. Check for bent, deform, or damage of the shift forks.

Transmission Fluid Inspection and Replacement

1. Raise the vehicle on a lift, and make sure it is securely supported.

2. Remove the front splash shield (see page 20-274).

3. Remove the oil filler plug (A) and sealing washer (B), check the condition of the MTF, and make sure it is at the proper level (C).

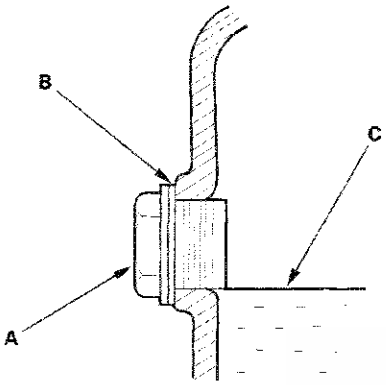

4. If the fluid is dirty, remove the drain plug (A) and the sealing washer (B), and drain the MTF.

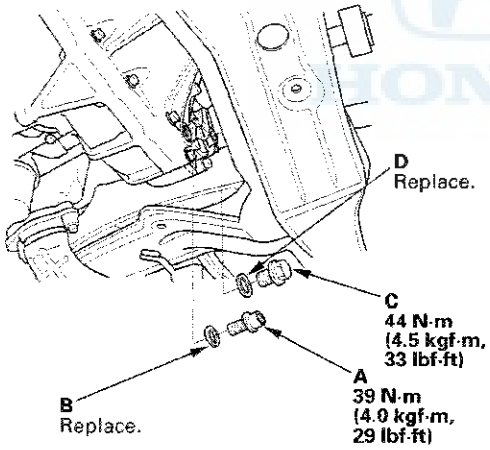

5. Install the drain plug with a new sealing washer, and refill the transmission with MTF to the proper level. Always use Honda Manual Transmission Fluid (MTF).

   Fluid Capacity:
   1.9 L (2.0 US qt) at fluid change
   2.0 L (2.1 US qt) at overhaul

6. Install the filler plug (C) with a new sealing washer (D).

7. Install the front splash shield (see page 20-274).

8. Lower the vehicle on the lift.

9. Connect the Honda Diagnostic System (HDS) to the data link connector (DLC) (see step 2 on page 11-3).

10. Turn the ignition switch to ON (II).

11. Make sure the HDS communicates with the vehicle and the engine control module (ECM). If it doesn't communicate, troubleshoot the DLC circuit (see page 11-192).

12. Select BODY ELECTRICAL with the HDS.

13. Select ADJUSTMENT in the GAUGES MENU with the HDS.

14. Select RESET in the MAINTENANCE MINDER with the HDS.

15. Select RESETTING THE MTF LIFE with the HDS (see page 3-6).

Back-up Light Switch Test

1. Disconnect the back-up light switch 2P connector (A).

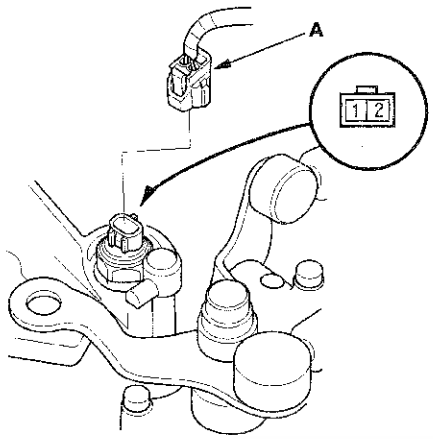

2. Check for continuity between back-up light switch 2P connector terminals No. 1 and No. 2. There should be continuity only when the shift lever is in reverse. If the result is faulty, go to step 3.

BACK-UP LIGHT SWITCH 2P CONNECTOR

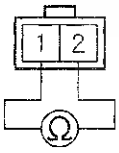

Terminal side of male terminals

3. Remove the back-up light switch (A). Check for continuity between back-up light switch 2P connector terminals No. 1 and No. 2. There should be continuity when the switch end (B) is pressed, and no continuity when the switch end is released. If the result is faulty, replace the back-up light switch. If the switch is OK, check the reverse shift piece in the transmission.

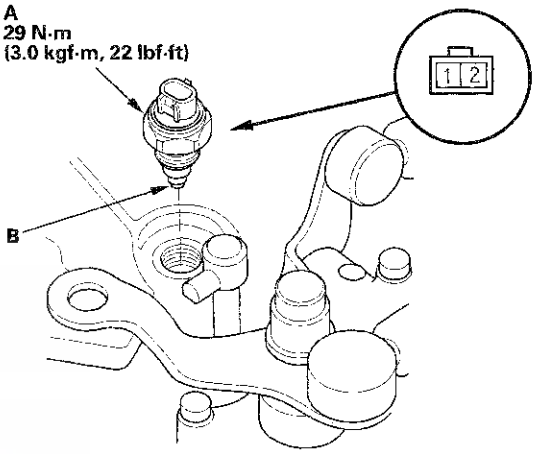

BACK-UP LIGHT SWITCH 2P CONNECTOR

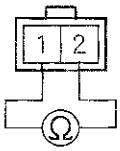

Terminal side of male terminals

4. Apply liquid gasket (P/N 08717-0004, 08718-0001, 08718-0012, 08718-0003, or 08718-0009) to the threads of the back-up light switch, and install it on the transmission housing.

5. Connect the back-up light switch 2P connector.

Transmission Removal

Special Tools Required
- Engine support hanger, A and Reds AAR-T1256 *
- Engine hanger adapter VSB02C000015 *
- Front subframe adapter VSB02C000016 *

* : These special tools are available through the Honda Tool and Equipment Program 888-424-6857.

NOTE: Use fender covers to avoid damaging painted surfaces.

1. Secure the hood in the wide open position with the support strut.

2. Remove the front grille cover.

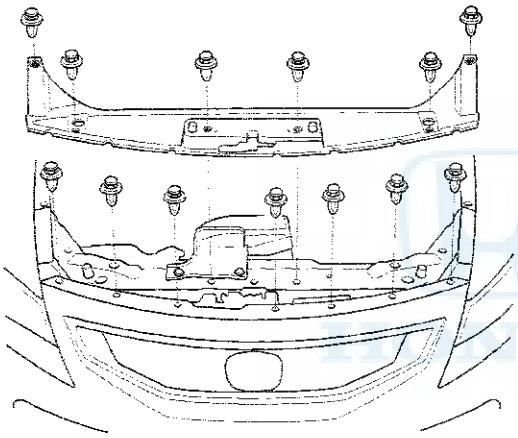

3. Do the battery removal procedure (see page 22-90).

4. Remove the air cleaner assembly (see page 11-359).

5. Remove the battery base bolts (A), loosen the two bolts (B), remove the cable clamp (C) and the harness bracket bolt (D), then remove the battery base (E).

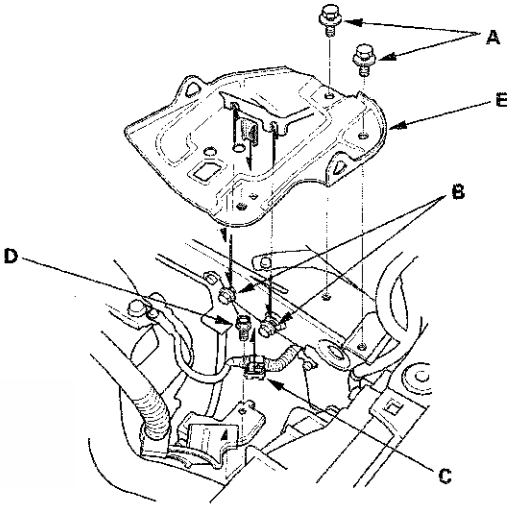

6. Remove the slave cylinder mounting bolts (A) and the bracket mounting nut (B), then carefully move the slave cylinder out of the way to avoid bending the clutch line.

   NOTE: Do not press the clutch pedal after the slave cylinder has been removed.

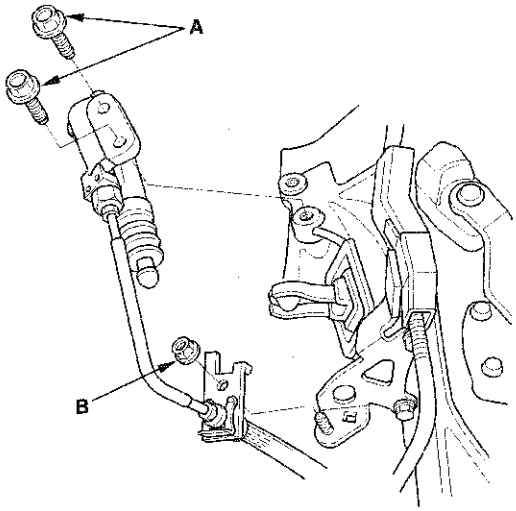

(cont'd)

Transmission Removal (cont'd)

7. Remove the nut (A) and the clamp (B), then move the under-hood fuse/relay box (C) out of the way.

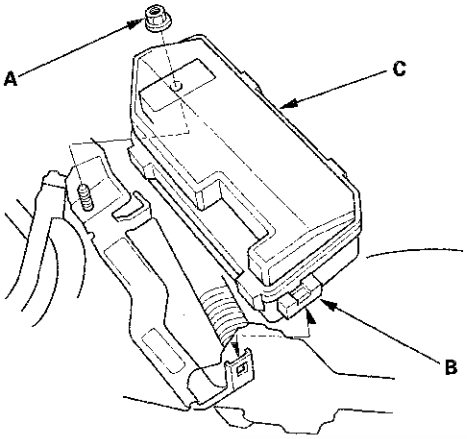

8. Remove the lock pins (A), the shift cable bracket bolt (B), and the shift cable bracket (C), then disconnect the shift cables (D) from the change lever assembly (E). Carefully remove both cables and the bracket together to avoid bending the cables.

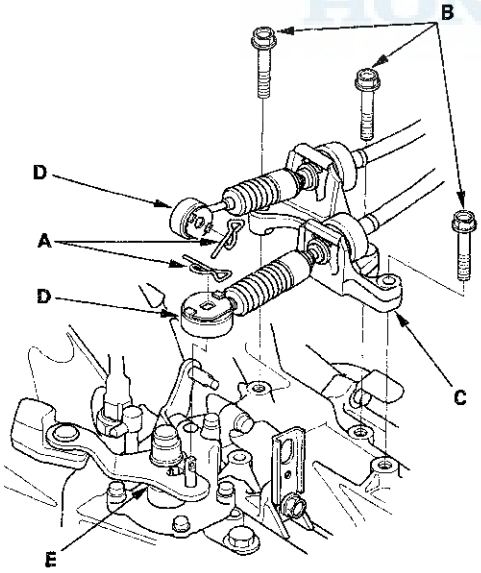

9. Disconnect the output shaft (countershaft) speed sensor connector (A), the back-up light switch connector (B), and the harness clamp (C).

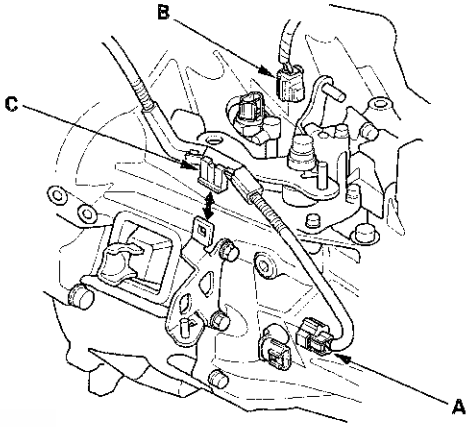

10. Remove the bolts (A), the harness clamp (B), and the bracket (C).

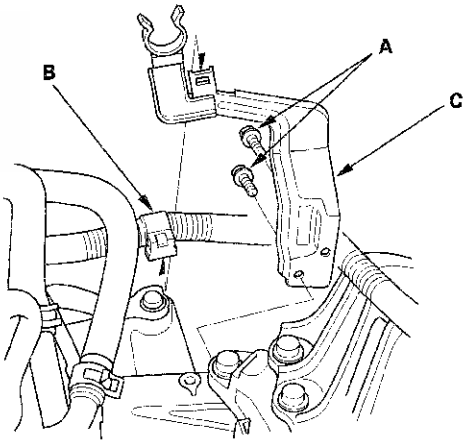

11. Remove the hose from the clamp (A) and the nuts (B), then remove the strut brace (C).

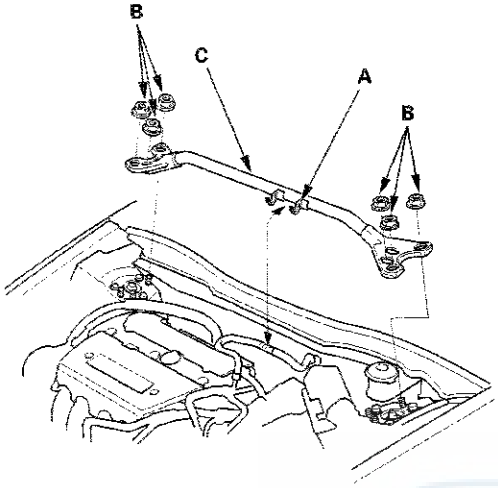

12. Remove the evaporative emission (EVAP) canister hose (A) and the brake booster vacuum hose (B).

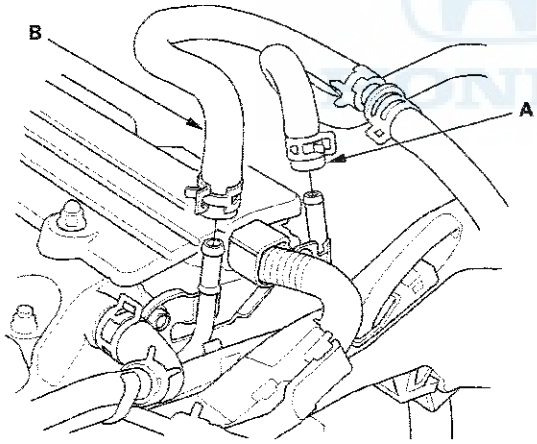

13. Attach the engine hanger adapter (VSB02C000015) to the threaded hole in the cylinder head.

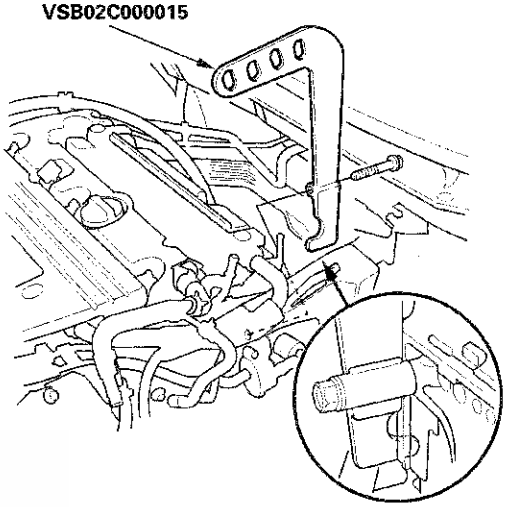

14. Install the engine support hanger (A) to the vehicle, and attach the hook (B) to the engine hanger adapter (C). Tighten the wing nut (D) by hand, and lift and support the engine/transmission.

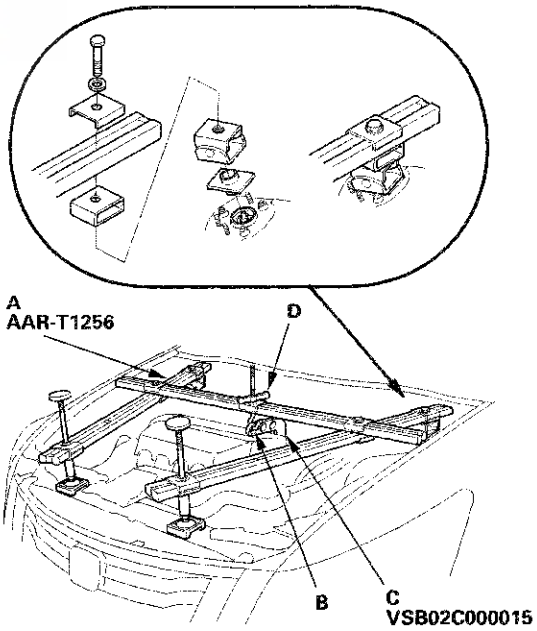

(cont'd)

Transmission Removal (cont'd)

15. Remove the front engine mount stop nuts (A), the front engine mount stop (B), and the vacuum hose bracket (C), then remove the front engine mount bolt (D), and disconnect the vacuum hose (E).

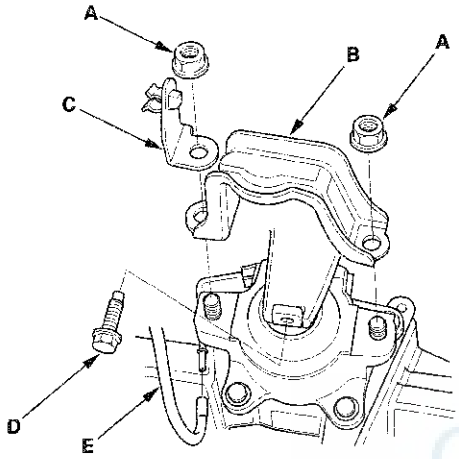

16. Remove the two rear engine mount bracket bolts (A) and three rear engine mount bolts (B).

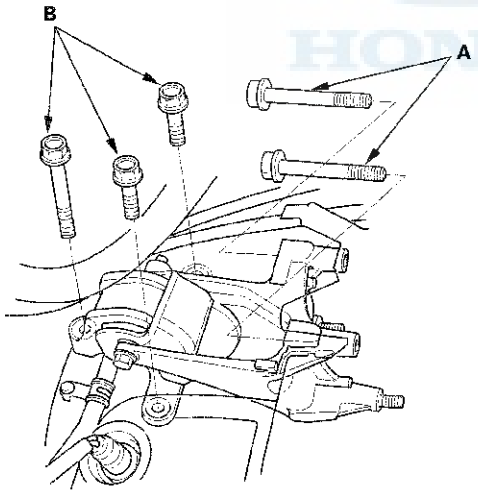

17. Remove the power steering line holder mounting bolts (A).

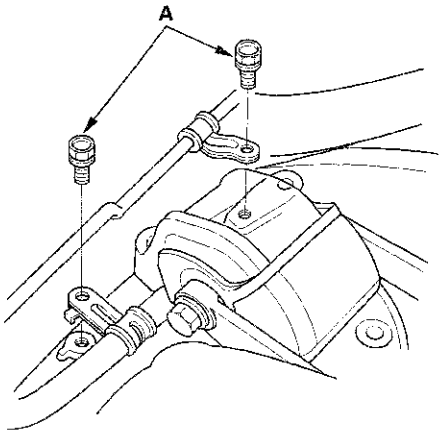

18. Remove the two heat shield bolts (A), the heat shield (B), and the two power steering gearbox mounting bracket bolts (C), then remove the power steering gearbox mounting bracket (D).

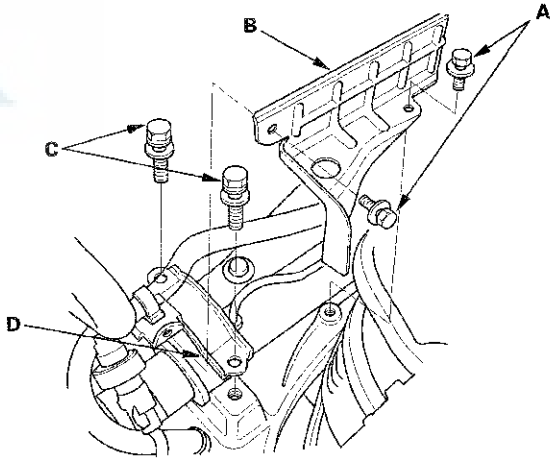

19. Remove the power steering gearbox stiffener bolts (A) and the power steering stiffener plates (B).

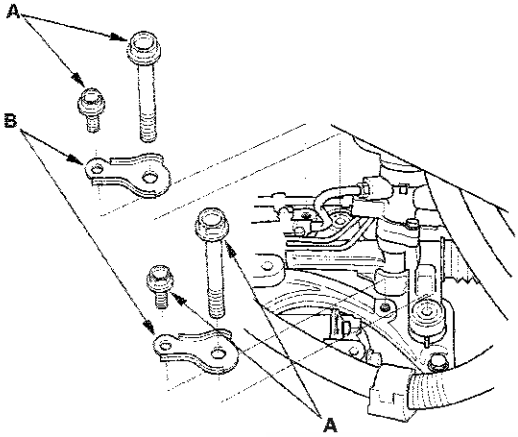

20. Remove the upper transmission mount bracket bolts (A).

NOTE: Do not remove the TORX bolt (B) from the upper transmission mount. If the TORX bolt is removed, the upper transmission mount must be replaced as an assembly.

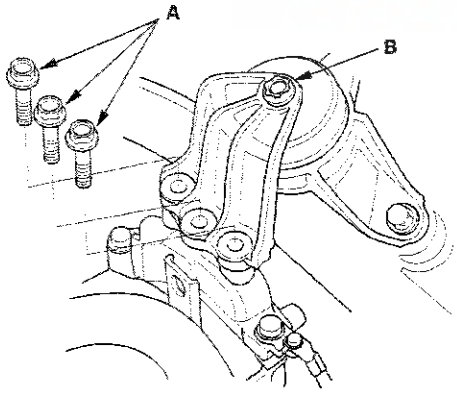

21. Remove the three upper transmission mount bracket bolts (A), the upper transmission mount bracket (B), the ground cable mount bolt (C), and the ground cable (D).

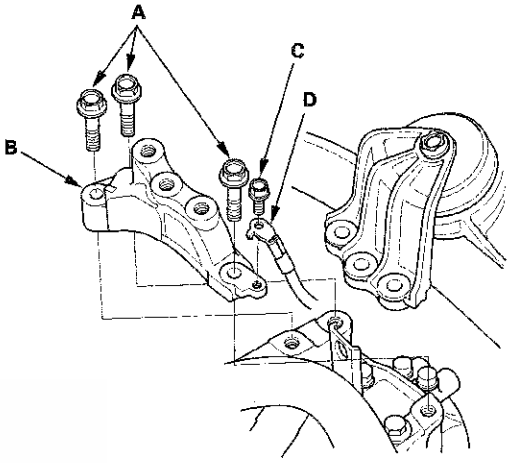

22. Remove the upper transmission mount bolts (A).

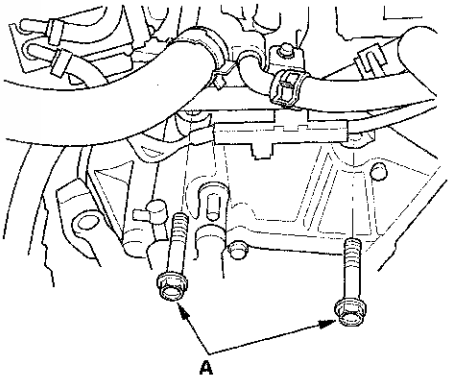

(cont'd)

Transmission Removal (cont'd)

23. Raise the vehicle on a lift, and make sure it is securely supported.

24. Remove the front wheels.

25. Remove the front splash shield.

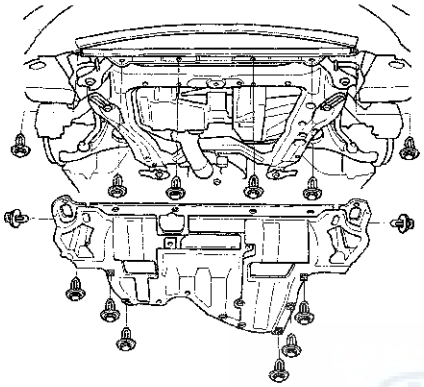

26. Drain the MTF. Reinstall the drain plug using a new sealing washer (see page 13-5).

27. Remove the damper fork (see step 4 on page 18-31).

28. Separate the knuckle ball joint from the lower arm (see page 18-21).

29. Remove exhaust pipe A and the gaskets (B).

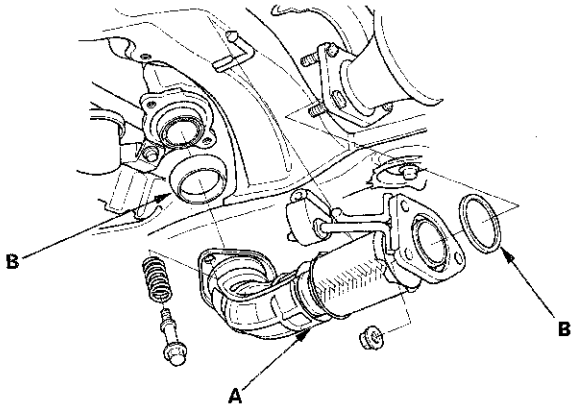

30. Remove the rear engine mount bracket bolts.

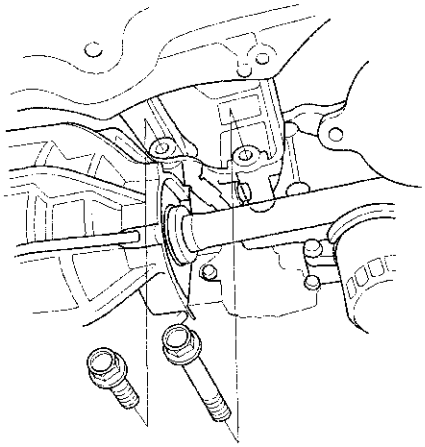

31. Remove the subframe mid mount bolts (A) and the subframe mid mount (B) from both sides.

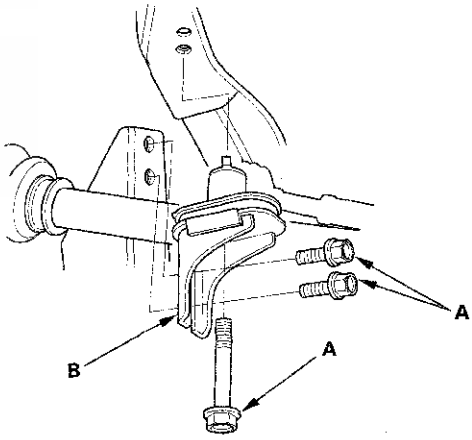

32. Remove the lower transmission mount mounting nuts (A).

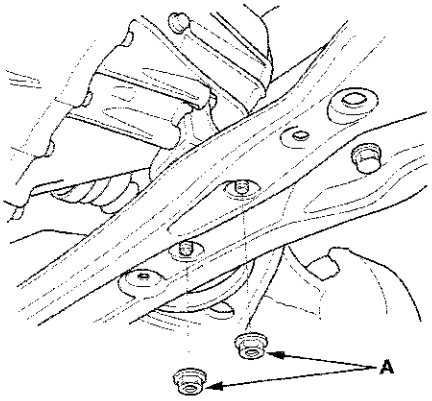

33. Remove the power steering line holder bolt (A) and the power steering line from the clamp (B).

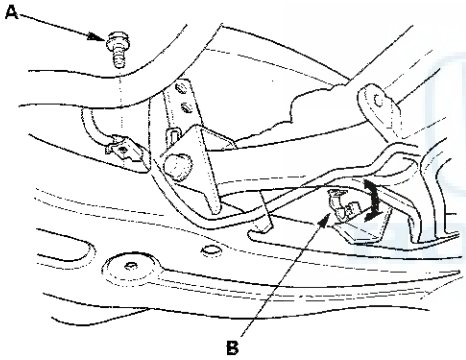

34. Attach the front subframe adapter (A) to the front suspension subframe and hang the belt of the subframe adapter over the front of the subframe, then secure the belt with its stop.

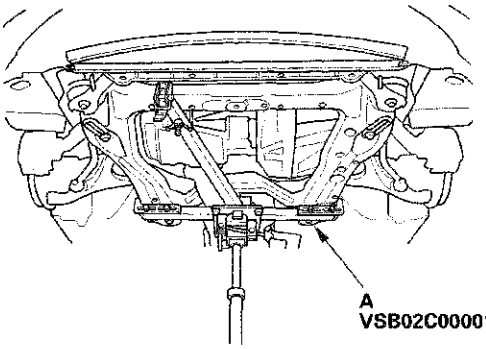

35. Raise the jack and line up the slots in the front subframe adapter arms with the bolt holes on the jack base, then securely attach them with four bolts.

36. Remove the four front stiffener bolts (A), the front stiffeners (B), the four rear stiffeners bolts (C), and the rear stiffeners (D), then remove the front suspension subframe (E).

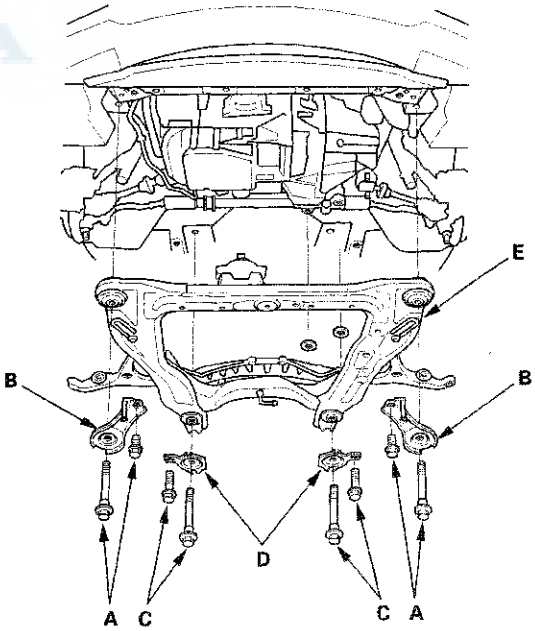

(cont'd)

Transmission Removal (cont'd)

37. Remove the lower transmission mount bolts (A) and the lower transmission mount (B).

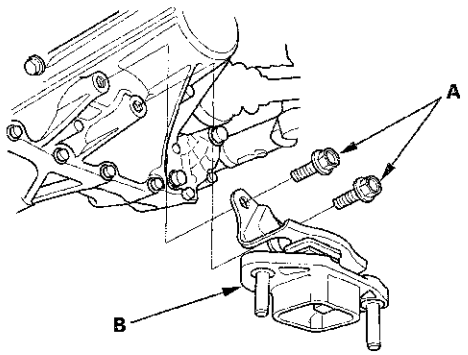

38. Pry the left driveshaft inboard joint (A) from the differential using a prybar.

    NOTE:
    - Do not pull on the driveshaft, or the inboard joint may come apart. Pull the inboard joint straight out to avoid damaging the oil seal.
    - Be careful not to damage the oil seal with the prybar.

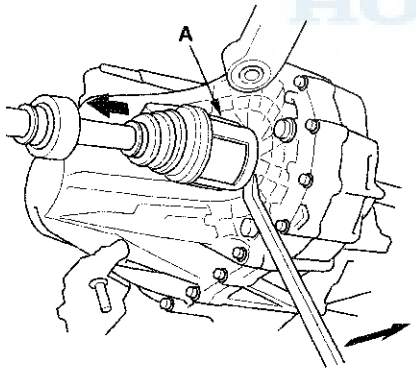

39. Drive the inboard joint (A) of the right driveshaft off of the intermediate shaft using a drift and a hammer.

    NOTE: Do not pull on the driveshaft, or the inboard joint may come apart.

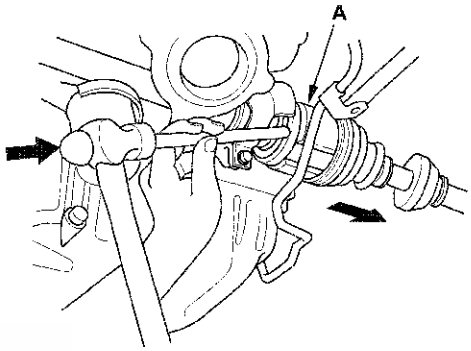

40. Remove the intermediate shaft (see page 16-23).

41. Remove the clutch cover (A) and the CKP sensor cover (B).

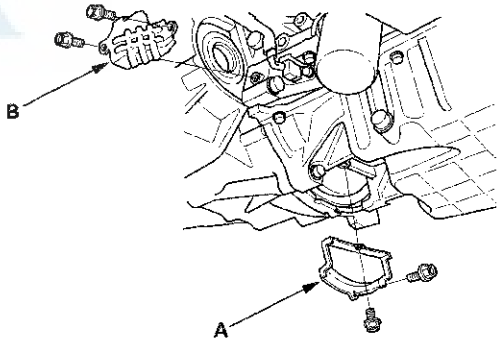

42. Support the transmission with a transmission jack.

43. Remove the lower transmission mounting bolts.

Front side

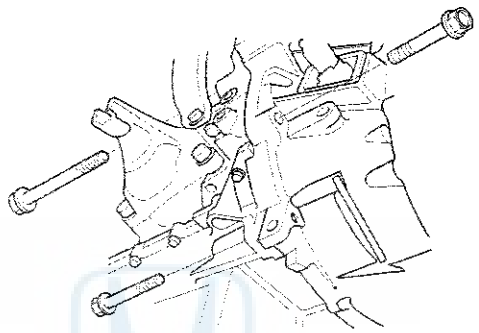

Rear side

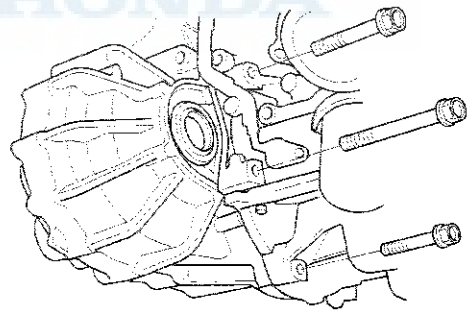

44. Pull the transmission away from the engine until the transmission mainshaft clears the clutch pressure plate.

45. Slowly lower the transmission about 150 mm (6 in). Check once again that all hoses and harnesses are disconnected and free from the transmission, then lower it completely.

Transmission Installation

Special Tools Required
- Engine support hanger, A and Reds AAR-T1256 *
- Engine hanger adapter VSB02C000015 *
- Front subframe adapter VSB02C000016 *
- Subframe alignment pin 070AG-SJAA10S

*: These special tools are available through the Honda Tool and Equipment Program 888-424-6857.

NOTE: Use fender covers to avoid damaging painted surfaces.

1. Inspect the release bearing (see page 12-21), and reinstall the release bearing and the release fork with the appropriate grease (see page 12-22).

2. Make sure the two dowel pins (A) are installed in the clutch housing.

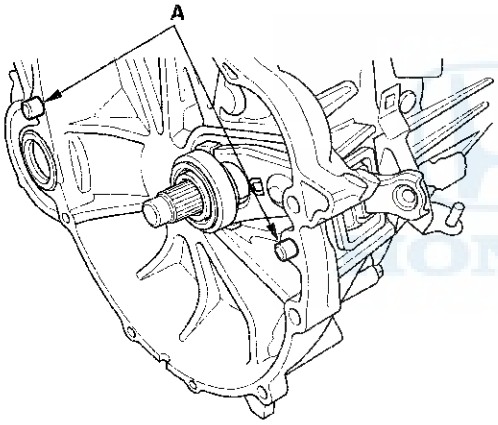

3. Place the transmission on the transmission jack, and raise it to engine level.

4. Align the transmission mainshaft and the clutch pressure plate, then move the transmission inward until there is no gap between the transmission housing and the engine block.

5. Install the lower transmission mounting bolts.

Front side

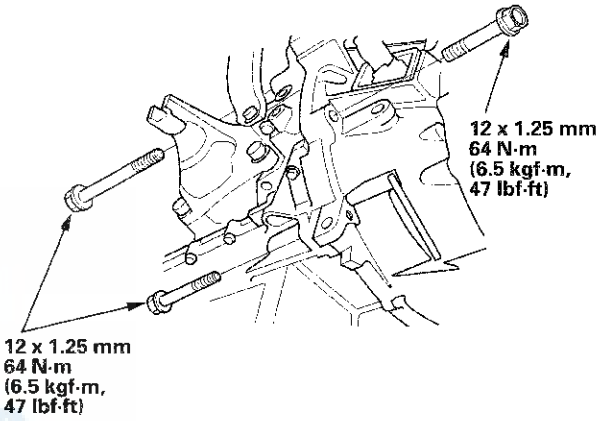

Rear side

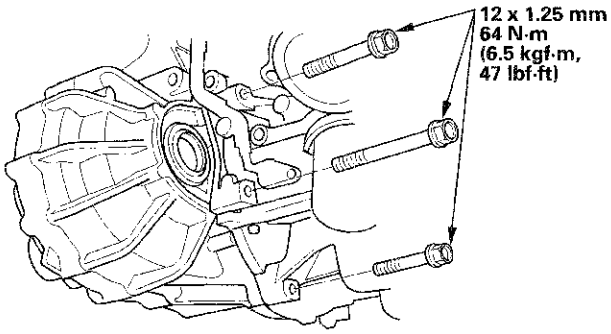

6. Install the clutch cover (A) and the CKP sensor cover (B).

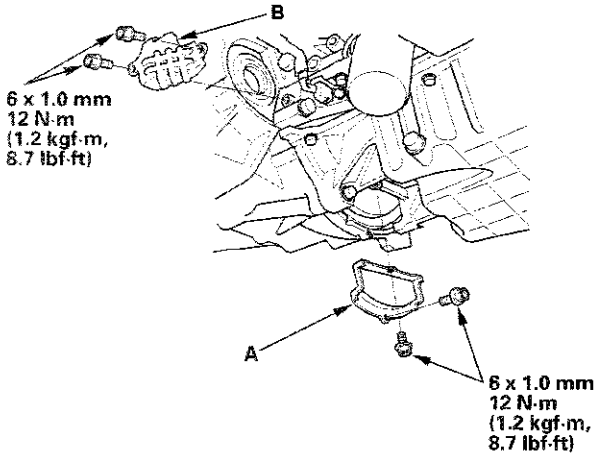

7. Install the intermediate shaft (see page 16-28).

8. Install both driveshafts (see page 16-20).

9. Install the lower transmission mount (A) with new bolts, then remove the transmission jack.

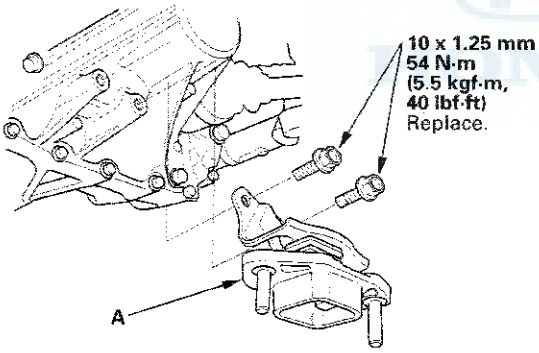

10. Support the front suspension subframe with the front subframe adapter and a jack.

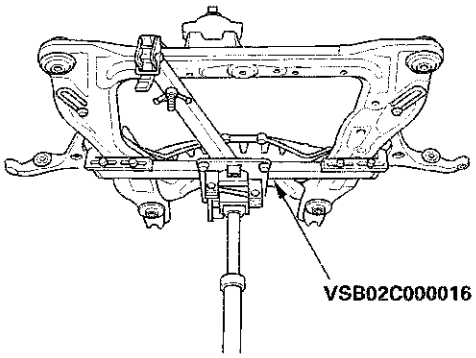

11. Position the steering gearbox washers (A) on the front suspension subframe (B), and lift the subframe up to the body.

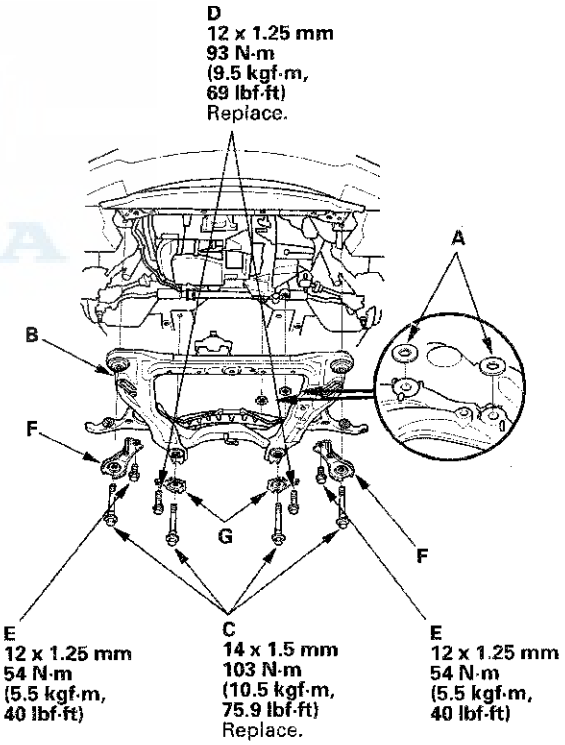

12. Loosely install the new subframe mounting bolts (C), the new rear stiffener mounting bolts (D), the front stiffener mounting bolts (E), the front stiffeners (F), and the rear stiffeners (G).

(cont'd)

Transmission Installation (cont'd)

13. Partially tighten the right rear subframe mounting bolt (A); insert the subframe alignment pin through the positioning slot (B) on the rear stiffener, through the positioning hole (C) on the subframe, and into the positioning hole on the body, then tighten the subframe mounting bolt.

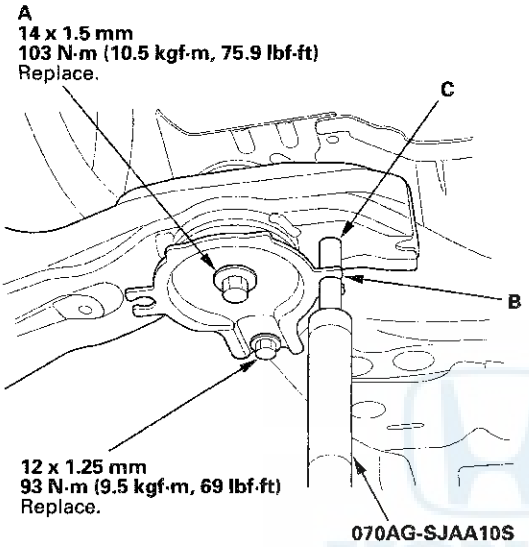

14. Partially tighten the left rear subframe mounting bolt in the same manner as in step 13.

15. Partially tighten the right and left front subframe mounting bolts.

16. Tighten the right rear mounting bolt to the specified torque with the subframe alignment pin in the positioning hole.

17. Tighten the left rear mounting bolt to the specified torque with the subframe alignment pin in the positioning hole.

18. Tighten the right and left front mounting bolt to the specified torque.

19. Check that the positioning holes and slots are aligned using the subframe alignment pin.

20. Tighten the rear and front stiffener mounting bolts to the specified torque.

21. Remove the jack and front subframe adapter.

22. Install the power steering line holder bolt (A) and the power steering line to the clamp (B).

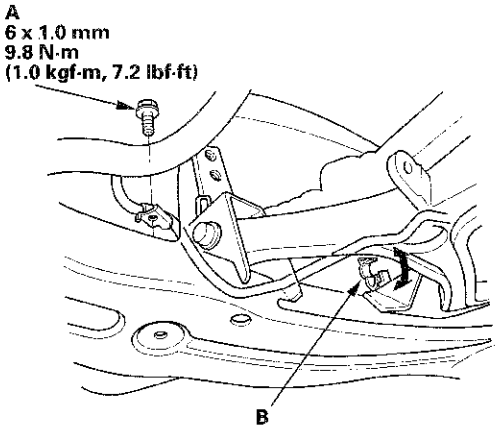

23. Install the lower transmission mount mounting nuts.

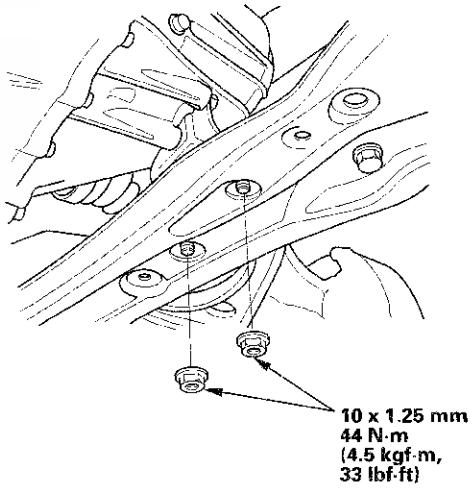

24. Install the subframe mid mount on both sides with new bolts.

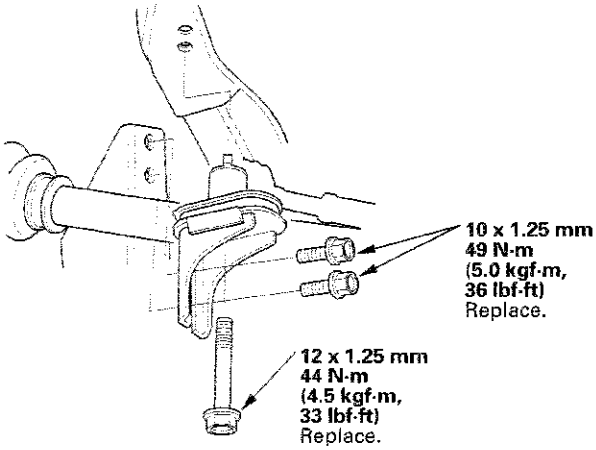

25. Install the rear engine mount bracket bolts with new bolts.

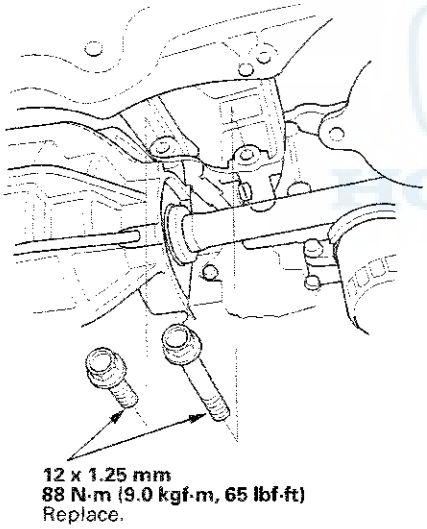

26. Install exhaust pipe A with the new gaskets (B), the bolts, the springs, and the new nuts as shown.

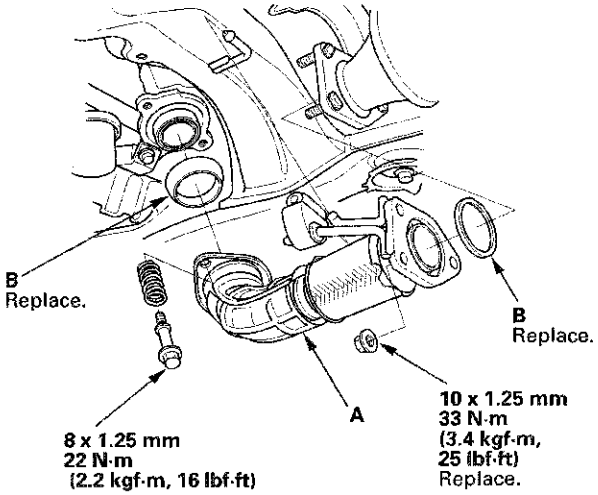

27. Connect the knuckle ball joint onto the lower arm (see page 18-21).

28. Install the damper fork (see step 4 on page 18-33).

29. Refill the transmission fluid to the proper level (see page 13-5).

30. Install the front splash shield.

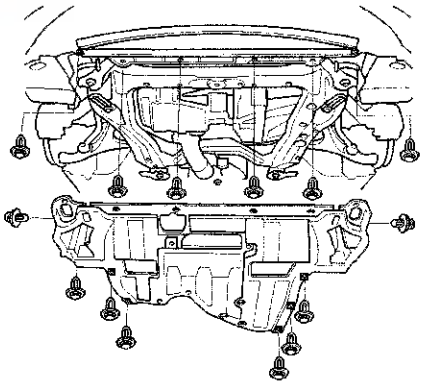

(cont'd)

Transmission Installation (cont'd)

31. Install the front wheels, and set them in the straight-ahead position.

32. Lower the vehicle on the lift.

33. Install the upper transmission mount bolts (A).

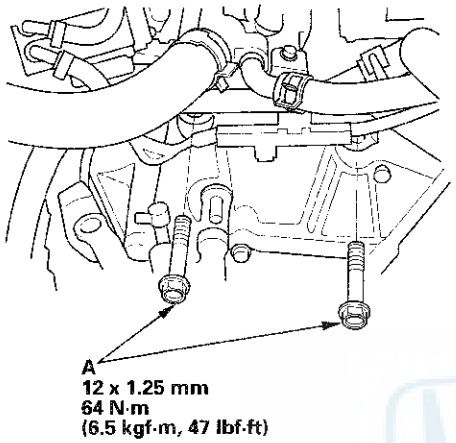

34. Install the upper transmission mount bracket (A) with new bolts, and connect the ground cable (B) by installing its mounting bolt.

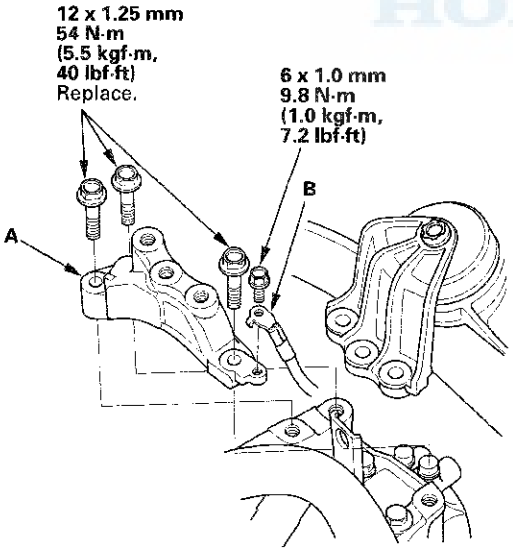

35. Install the new upper transmission mount bracket bolts (A).

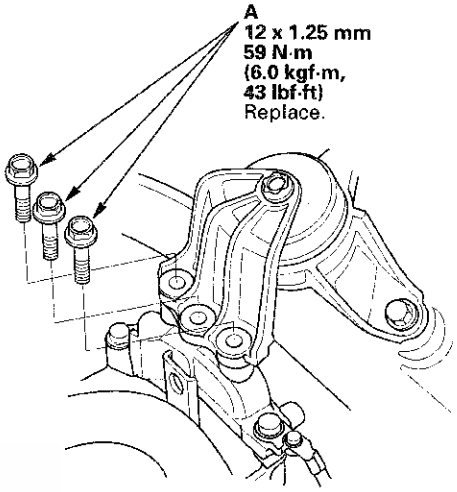

36. Install the steering stiffener plates (A), and loosely tighten the new power steering gear box mounting bolts (B) and the stiffener plate bolts (C).

NOTE: Make sure the lower washers placed in step 11 are correctly positioned before installing the bolts.

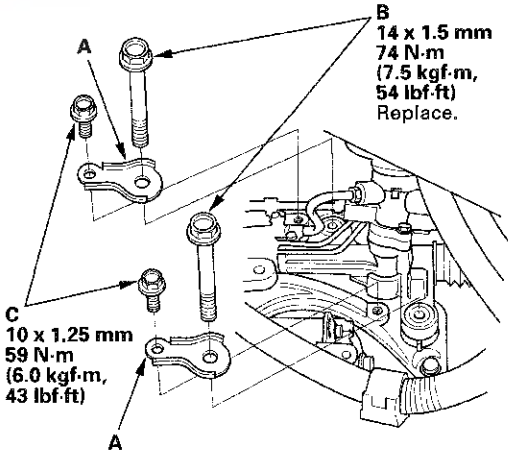

37. Install the power steering gearbox mounting bracket (A), and tighten the bolts to the specified torque, then install the heat shield (B).

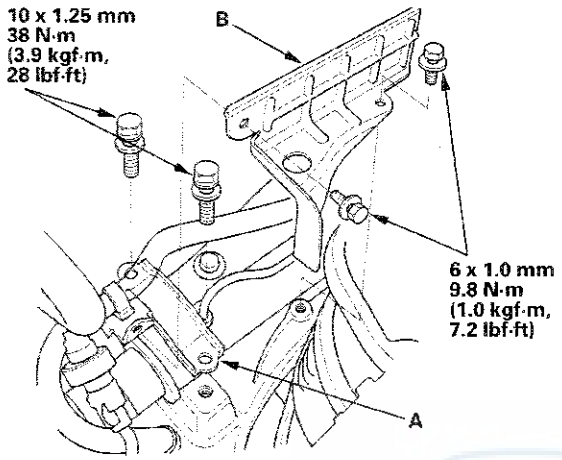

38. Tighten the driver's side of the power steering gear box mounting bolts and the stiffener plate bolts to the specified torque alternately in two steps.

39. Install the rear power steering line holders (A).

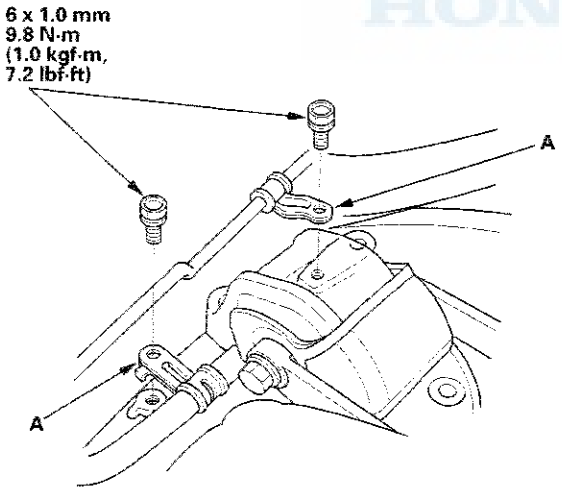

40. Install the three new rear engine mount bolts (A) and the two new rear engine mount bracket bolts (B).

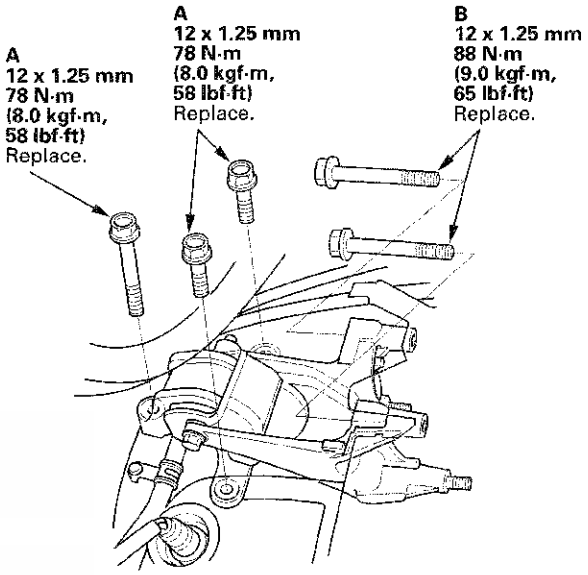

41. Install the new front engine mount bolt (A), the front engine mount stop (B), and the vacuum hose bracket (C) with new nuts, then connect the vacuum hose (D).

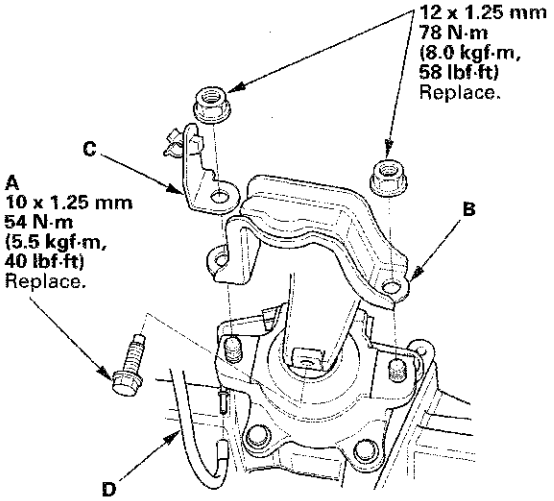

(cont'd)

Transmission Installation (cont'd)

42. Remove the engine support hanger and the engine hanger adapter from the engine.

43. Install the evaporative emission (EVAP) canister hose (A) and the brake booster vacuum hose (B).

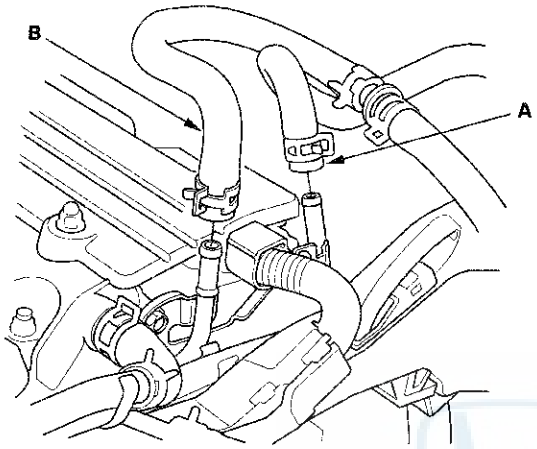

44. Install the strut brace (A) with the nuts (B), then install the hose to the clamp (C).

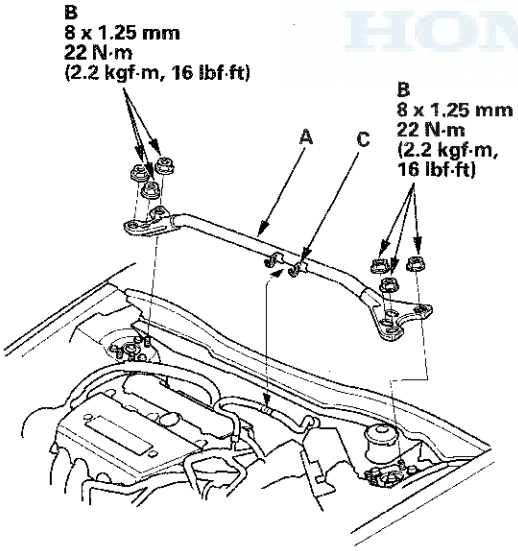

45. Install the bracket (A) and the harness clamp (B).

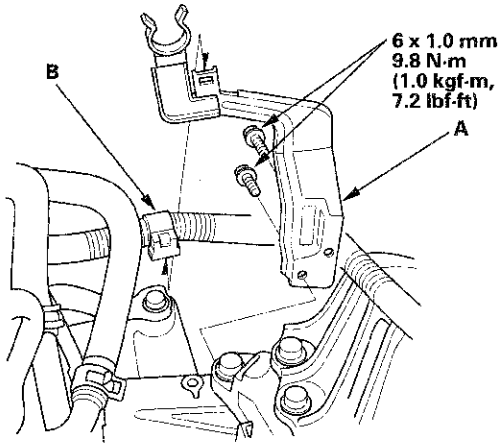

46. Install the harness clamp (A). Connect the output shaft (countershaft) speed sensor connector (B) and the back-up light switch connector (C).

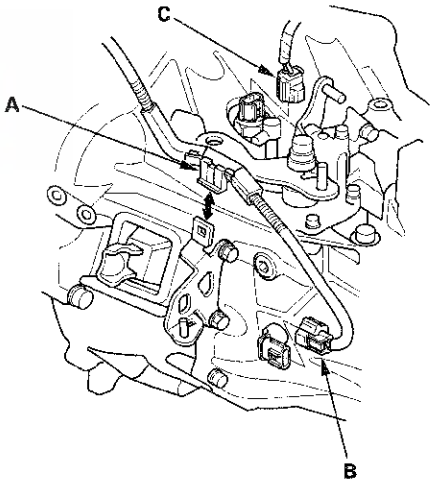

47. Apply a light coat of silicone grease (P/N 08C30-B0234M) to the cable ends (A) and connect the cable end to the change lever assembly (B), then install the shift cable bracket (C) and the lock pins (D). Do not bend or damage the shift cables.

NOTE: Make sure not to get any silicone grease on the terminal part of the connectors and switches, especially if you have silicone grease on your hands or gloves.

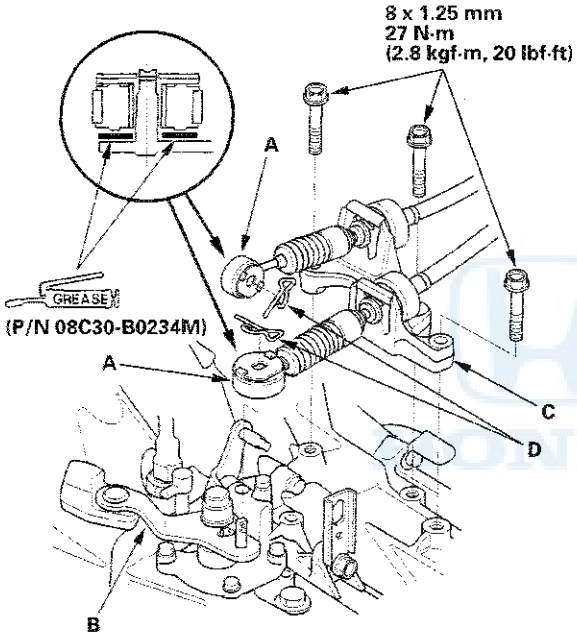

48. Install the under-hood fuse/relay box (A).

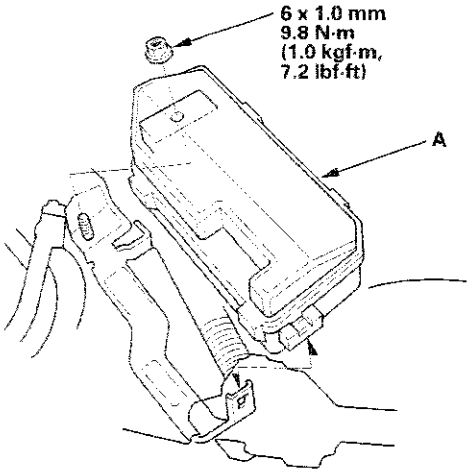

49. Apply a light coat of super high temp urea grease (P/N 08798-9002) to the end of the slave cylinder pushrod. Install the slave cylinder and the bracket mounting nut. Be careful not to bend the clutch line.

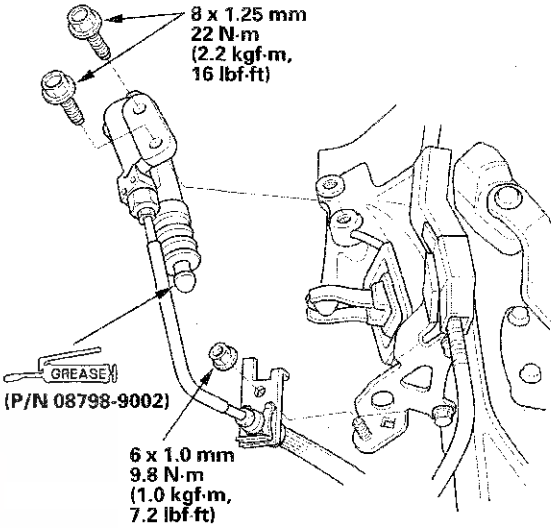

50. Install the battery base (A) and the cable clamp (B).

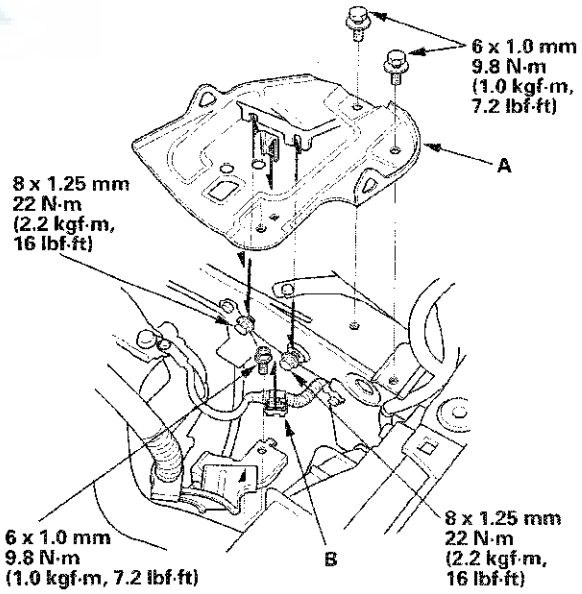

(cont'd)

Transmission Installation (cont'd)

51. Install the air cleaner assembly (see page 11-359).

52. Do the battery installation procedure (see page 22-90).

53. Install the front grille cover.

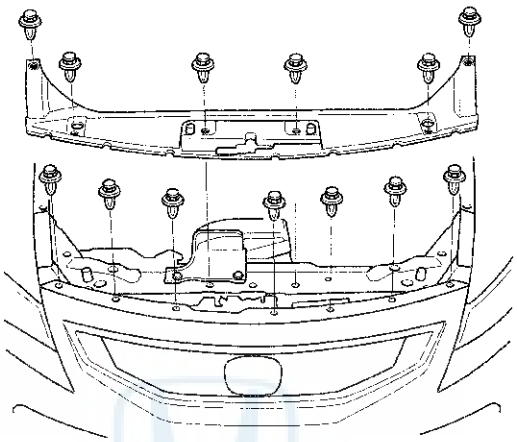

54. Check the wheel alignment (see page 18-5).

55. Check the shift lever and the clutch operation.

56. Test-drive the vehicle.

Transmission Disassembly

Exploded View-Clutch Housing

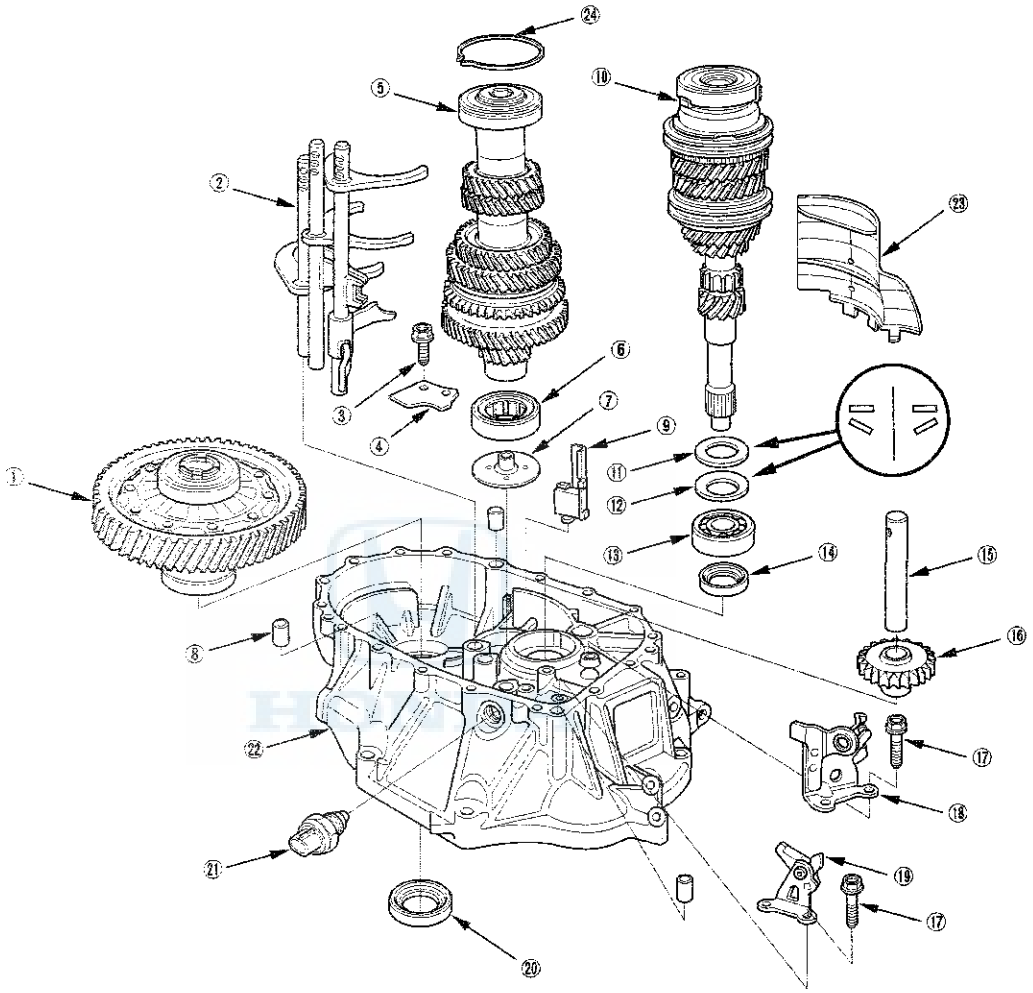

① DIFFERENTIAL ASSEMBLY
② SHIFT FORK ASSEMBLY
③ 6 mm FLANGE BOLT
13 N·m (1.3 kgf·m, 9.4 lbf·ft)
④ BEARING SET PLATE
⑤ COUNTERSHAFT ASSEMBLY
⑥ NEEDLE BEARING
⑦ OIL GUIDE PLATE C
⑧ 14 x 20 mm DOWEL PIN
⑨ MAGNET
⑩ MAINSHAFT ASSEMBLY
⑪ 28 mm WASHER
⑫ 28 mm SPRING WASHER
⑬ BALL BEARING
⑭ 28 x 43 x 7 mm OIL SEAL
Replace.
⑮ REVERSE IDLER GEAR SHAFT
⑯ REVERSE IDLER GEAR
⑰ 6 mm SPECIAL BOLT
15 N·m (1.5 kgf·m, 11 lbf·ft)
⑱ REVERSE SHIFT FORK
⑲ REVERSE LOCK CAM
⑳ 35 x 58 x 8 mm OIL SEAL
Replace.
㉑ BACK-UP LIGHT SWITCH
29 N·m (3.0 kgf·m, 22 lbf·ft)
㉒ CLUTCH HOUSING
㉓ BAFFLE PLATE
㉔ 72 mm SNAP RING

(cont'd)

Transmission Disassembly (cont'd)

Exploded View-Transmission Housing

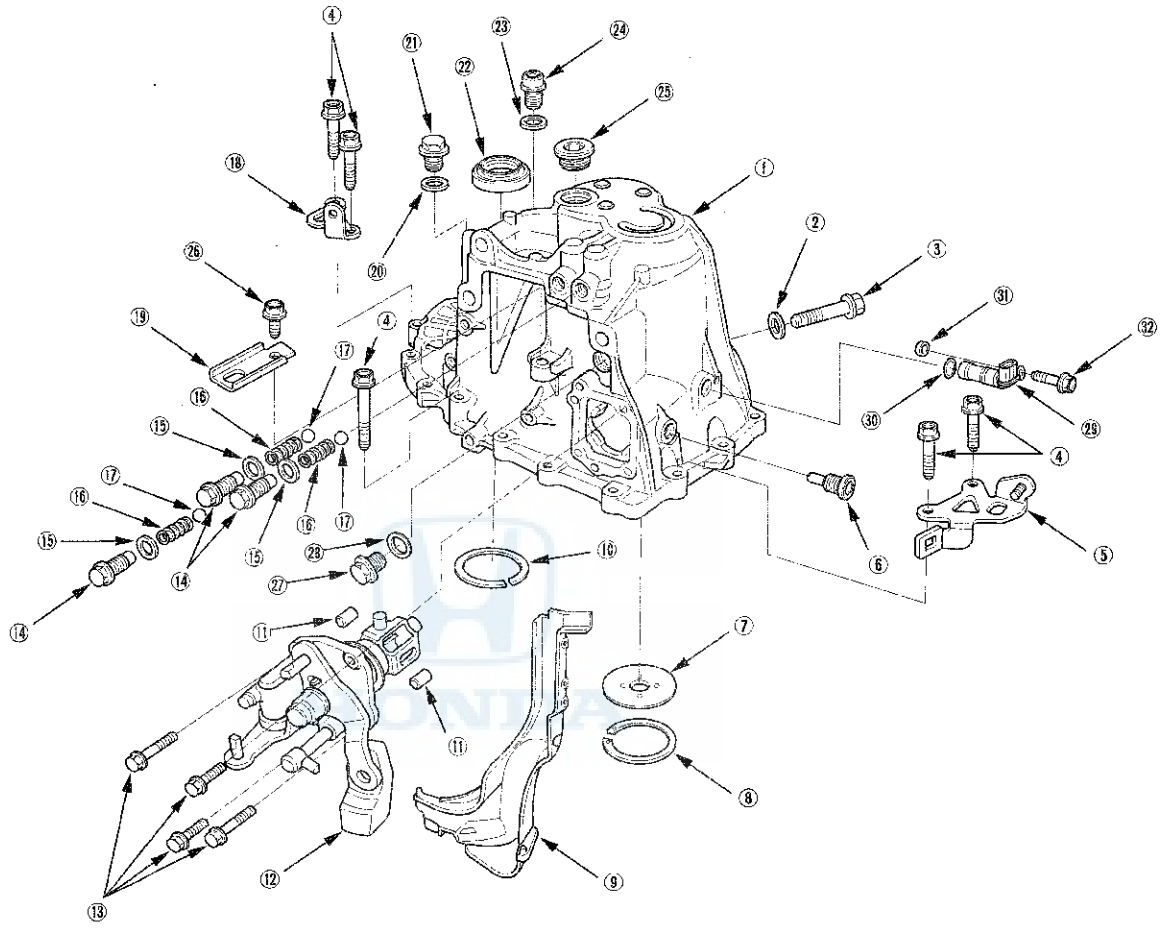

① TRANSMISSION HOUSING
② 10 mm SEALING WASHER
Replace.
③ 10 mm FLANGE BOLT
44 N·m (4.5 kgf·m, 33 lbf·ft)
④ 8 mm FLANGE BOLT
27 N·m (2.8 kgf·m, 20 lbf·ft)
⑤ TRANSMISSION HANGER A
⑥ INTERLOCK BOLT
39 N·m (4.0 kgf·m, 29 lbf·ft)
⑦ OIL GUIDE PLATE M
⑧ 72 mm SHIM
⑨ OIL GUTTER PLATE
⑩ 80 mm SHIM
⑪ 8 x 14 mm DOWEL PIN
⑫ CHANGE LEVER ASSEMBLY
⑬ 6 mm FLANGE BOLT
12 N·m (1.2 kgf·m, 8.7 lbf·ft)
⑭ DETENT BOLT
22 N·m (2.2 kgf·m, 16 lbf·ft)
⑮ 12 mm SEALING WASHER
Replace.
⑯ SPRING
⑰ STEEL BALL
⑱ TRANSMISSION HANGER B
⑲ TRANSMISSION HANGER C
⑳ 20 mm SEALING WASHER
Replace.
㉑ FILLER PLUG
44 N·m (4.5 kgf·m, 33 lbf·ft)
㉒ 40 x 56 x 8 mm OIL SEAL
Replace.
㉓ 14 mm SEALING WASHER
Replace.
㉔ DRAIN PLUG
39 N·m (4.0 kgf·m, 29 lbf·ft)
㉕ 32 mm SEALING CAP
34 N·m (3.5 kgf·m, 25 lbf·ft)
㉖ 10 mm FLANGE BOLT
44 N·m (4.5 kgf·m, 33 lbf·ft)
㉗ 20 mm BOLT
44 N·m (4.5 kgf·m, 33 lbf·ft)
㉘ 20 mm SEALING WASHER
Replace.
㉙ OUTPUT SHAFT (COUNTERSHAFT) SPEED SENSOR
㉚ O-RING
Replace.
㉛ PLAIN WASHER
㉜ 6 mm FLANGE BOLT
12 N·m (1.2 kgf·m, 8.7 lbf·ft)

NOTE: Place the clutch housing on two pieces of wood thick enough to keep the mainshaft from hitting the workbench.

1. Remove the release bearing and the release fork (see page 12-21).

2. Remove the detent bolts (A), the 12 mm sealing washers (B), the springs (D), the steel balls (E), and the back-up light switch (F).

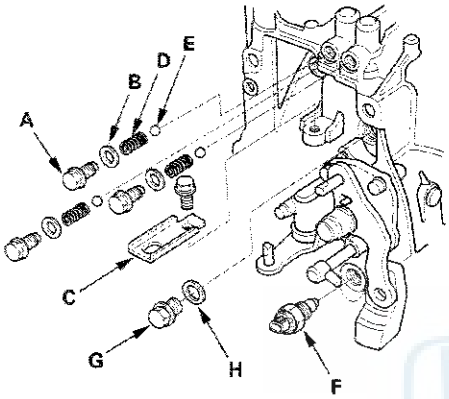

3. Remove transmission hanger C, the 20 mm bolt (G), and the 20 mm sealing washer (H).

4. Remove the interlock bolt (A), the change lever assembly (B), and the 8 x 14 mm dowel pins (C).

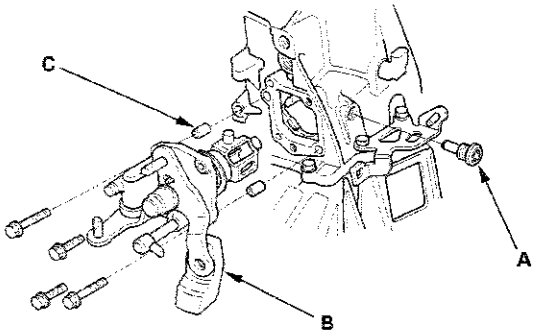

5. Remove the drain plug (A), the filler plug (B), the 10 mm flange bolt (C), and the sealing washers (D).

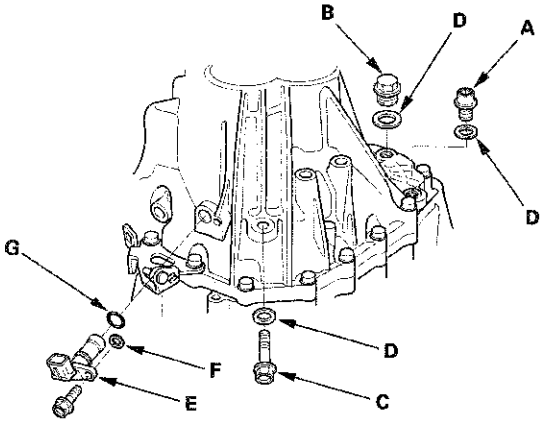

6. Remove the output shaft (countershaft) speed sensor (E), the plain washer (F), and the O-ring (G).

7. Loosen the 8 mm flange bolts in a crisscross pattern in several steps, then remove them with transmission hanger A and transmission hanger B.

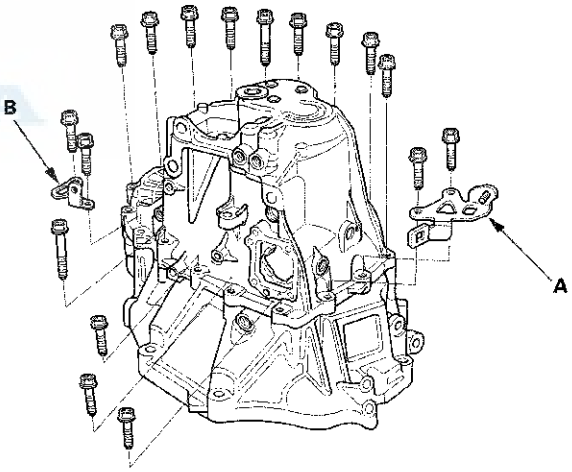

(cont'd)

Transmission Disassembly (cont'd)

8. Remove the 32 mm sealing cap (A).

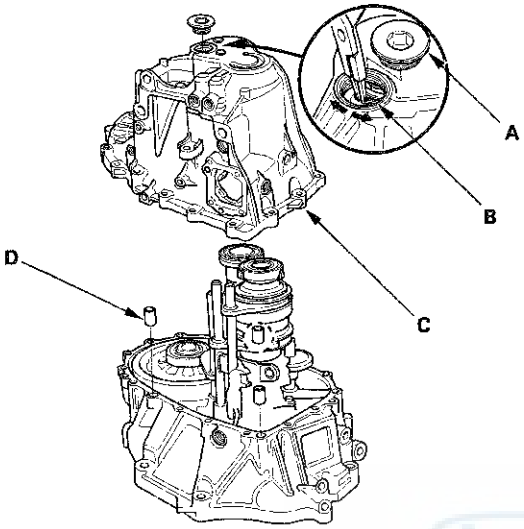

9. While expanding the 72 mm snap ring (B) on the countershaft ball bearing with snap ring pliers, lift the transmission housing (C). Release the snap ring pliers, and remove the transmission housing and the three 14 x 20 mm dowel pins (D).

10. Remove the baffle plate (A).

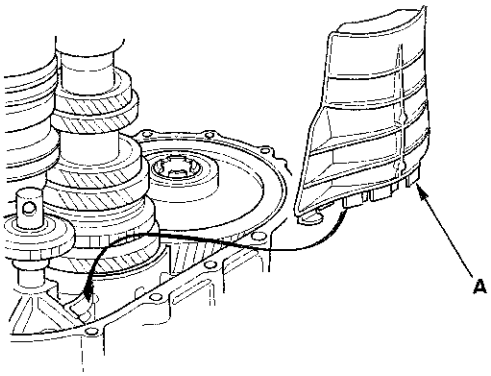

11. Remove the reverse lock cam (A).

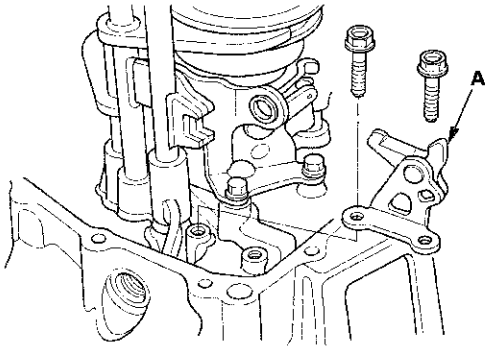

12. Remove the reverse idler gear (A) and the reverse idler gear shaft (B).

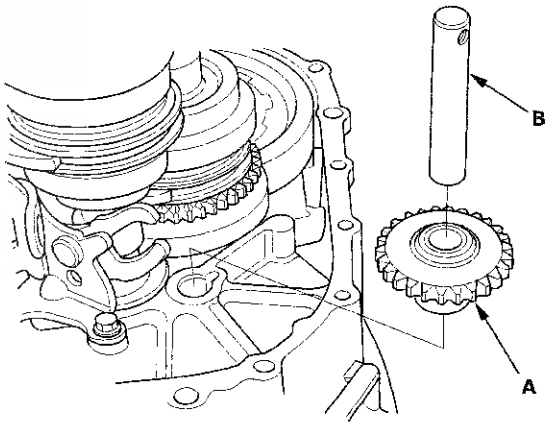

13. Remove the reverse shift fork (A).

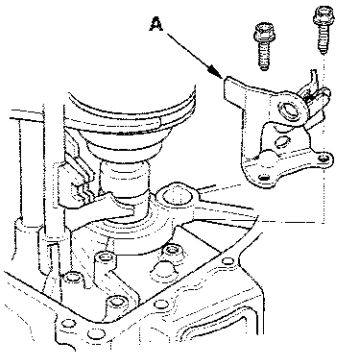

14. Apply tape to the mainshaft splines to protect the seal, then remove the mainshaft assembly (A) and the countershaft assembly (B) with the shift fork assembly (C) from the clutch housing (D).

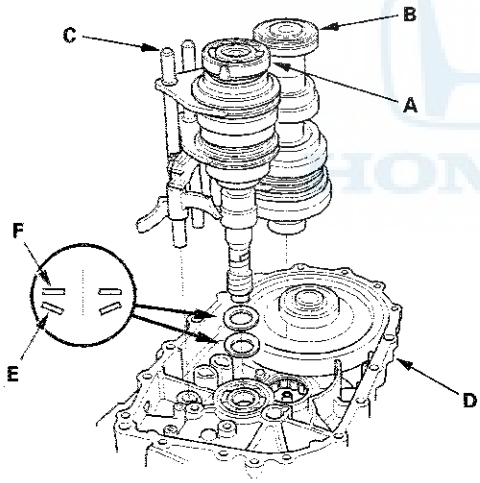

15. Remove the 28 mm spring washer (E) and the 28 mm washer (F).

16. Remove the differential assembly (A) and the magnet (B).

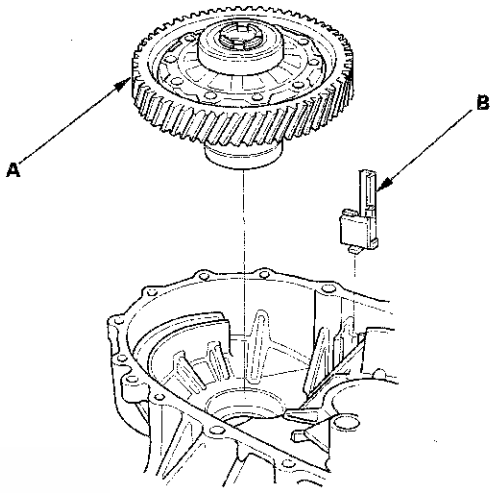

17. Remove the oil gutter plate (A), 72 mm shim (B), and oil guide plate M.

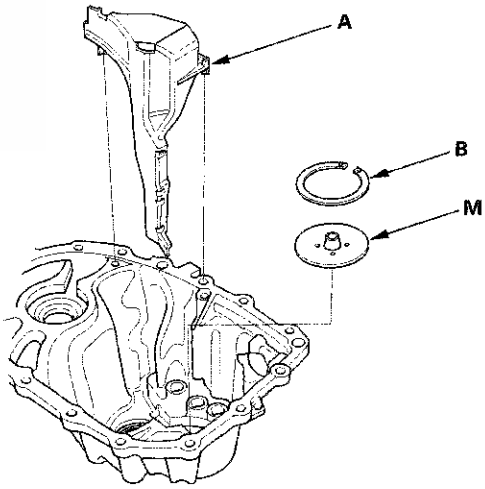

Reverse Shift Fork Clearance Inspection

1. Measure the clearance between the reverse idler gear (A) and the reverse shift fork (B) with a feeler gauge (C). If the clearance exceeds the service limit, go to step 2.

Standard: 0.20—0.59 mm (0.008—0.023 in.)
Service Limit: 1.2 mm (0.047 in.)

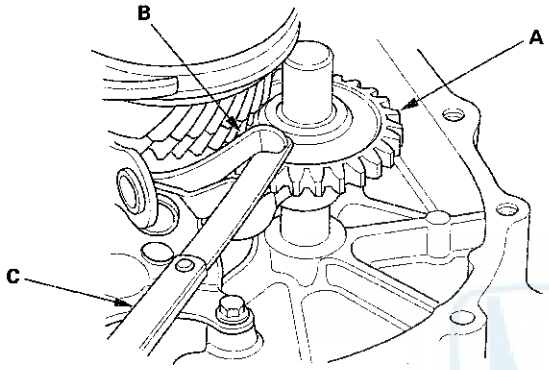

2. Measure the width of the reverse shift fork.

- If the width is not within the standard, replace the reverse shift fork.
- If the width is within the standard, replace the reverse idler gear.

Standard: 13.4—13.7 mm (0.528—0.539 in.)

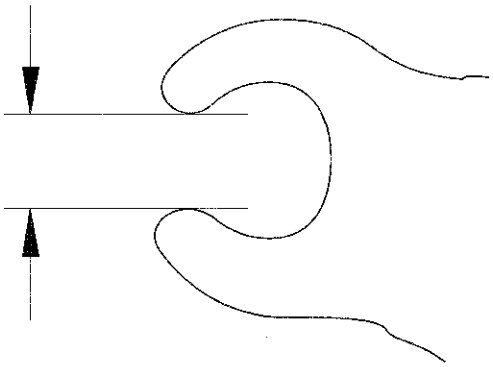

Change Lever Clearance Inspection

1. Measure the clearance between the change lever (A) and the select lever (B) with a feeler gauge (C). If the clearance exceeds the service limit, go to step 2.

Standard: 0.05—0.25 mm (0.002—0.010 in.)
Service Limit: 0.50 mm (0.020 in.)

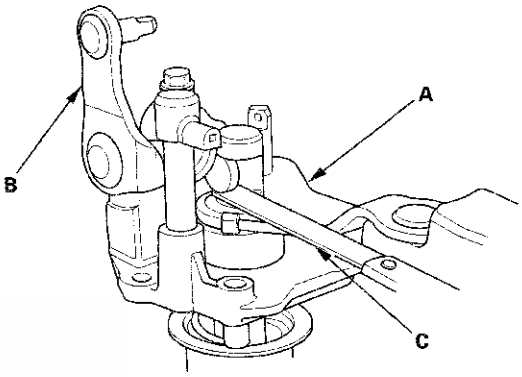

2. Measure the groove width of the change lever.

- If the groove width is not within the standard, replace the change lever.
- If the groove width is within the standard, replace the select lever.

Standard: 15.00—15.10 mm (0.591—0.594 in.)

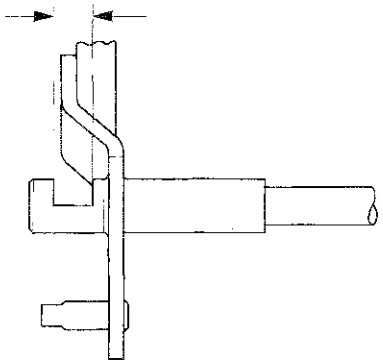

Change Lever Assembly Disassembly/Reassembly

NOTE: Prior to reassembling, clean all the parts in solvent, dry them, and apply grease to contact surfaces as shown. Do not wash the rubber parts with solvent.

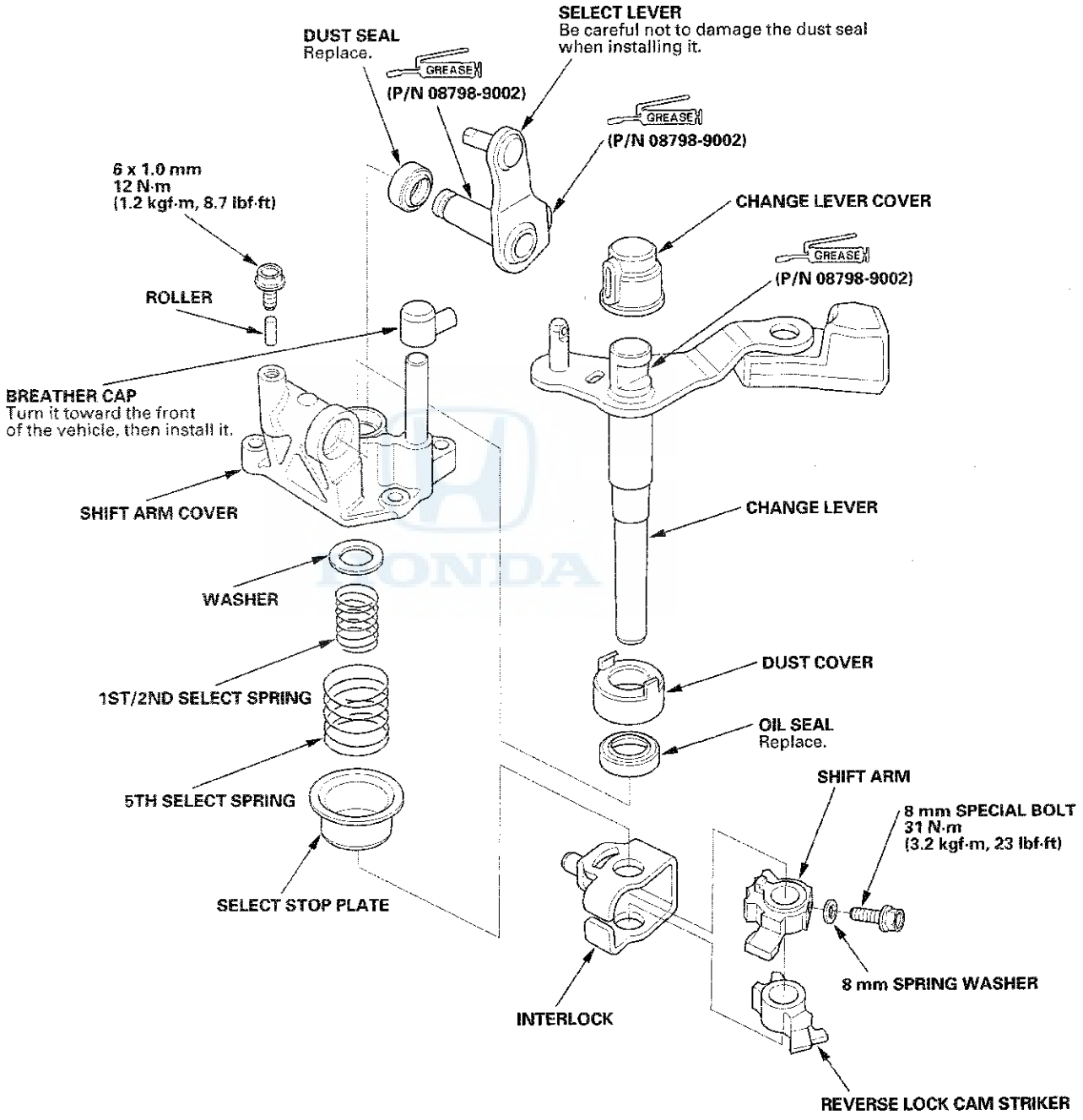

Shift Fork Clearance Inspection

1. Measure the clearance between each shift fork (A) and its matching synchro sleeve (B). If the clearance exceeds the service limit, go to step 2.

   Standard: 0.35—0.65 mm (0.014—0.026 in.)
   Service Limit: 1.0 mm (0.039 in.)

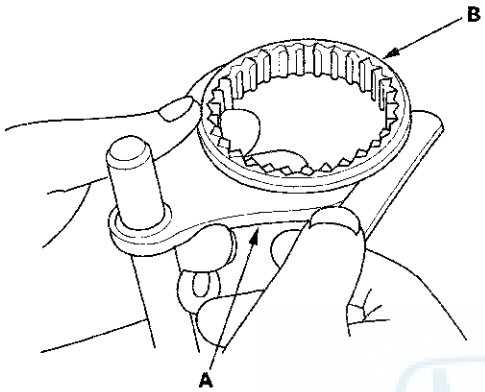

2. Measure the thickness of the shift fork fingers.

   - If the thickness is not within the standard, replace the shift fork.
   - If the thickness is within the standard, replace the synchro sleeve and synchro hub as a set.
   - If one arm of the shift fork shows more wear than others, the fork may be bent and needs to be replaced.

   Standard: 7.4—7.6 mm (0.29—0.30 in.)

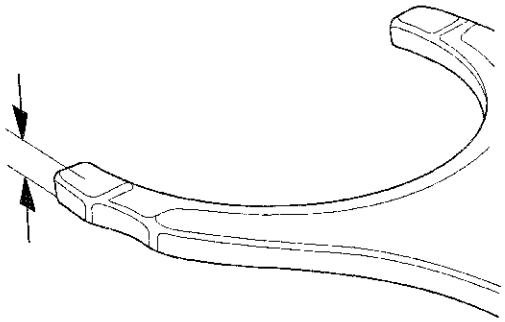

3. Measure the clearance between the shift fork (A) and the shift arm (B). If the clearance exceeds the service limit, go to step 4.

   Standard: 0.2—0.5 mm (0.008—0.020 in.)
   Service Limit: 0.6 mm (0.024 in.)

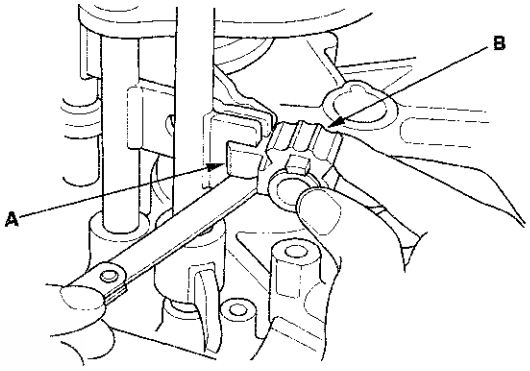

4. Measure the width of the shift arm.

   - If the width is not within the standard, replace the shift arm.
   - If the width is within the standard, replace the shift fork.

   Standard: 16.9—17.0 mm (0.665—0.669 in.)

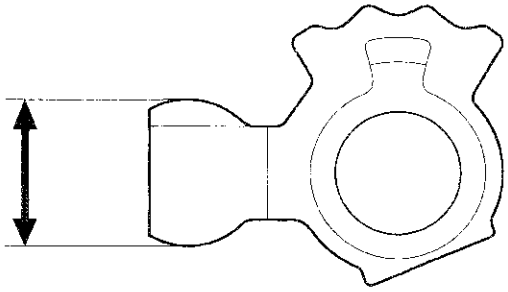

Shift Fork Disassembly/Reassembly

NOTE: Prior to reassembling, clean all the parts in solvent, dry them, and apply MTF to all contact surfaces.

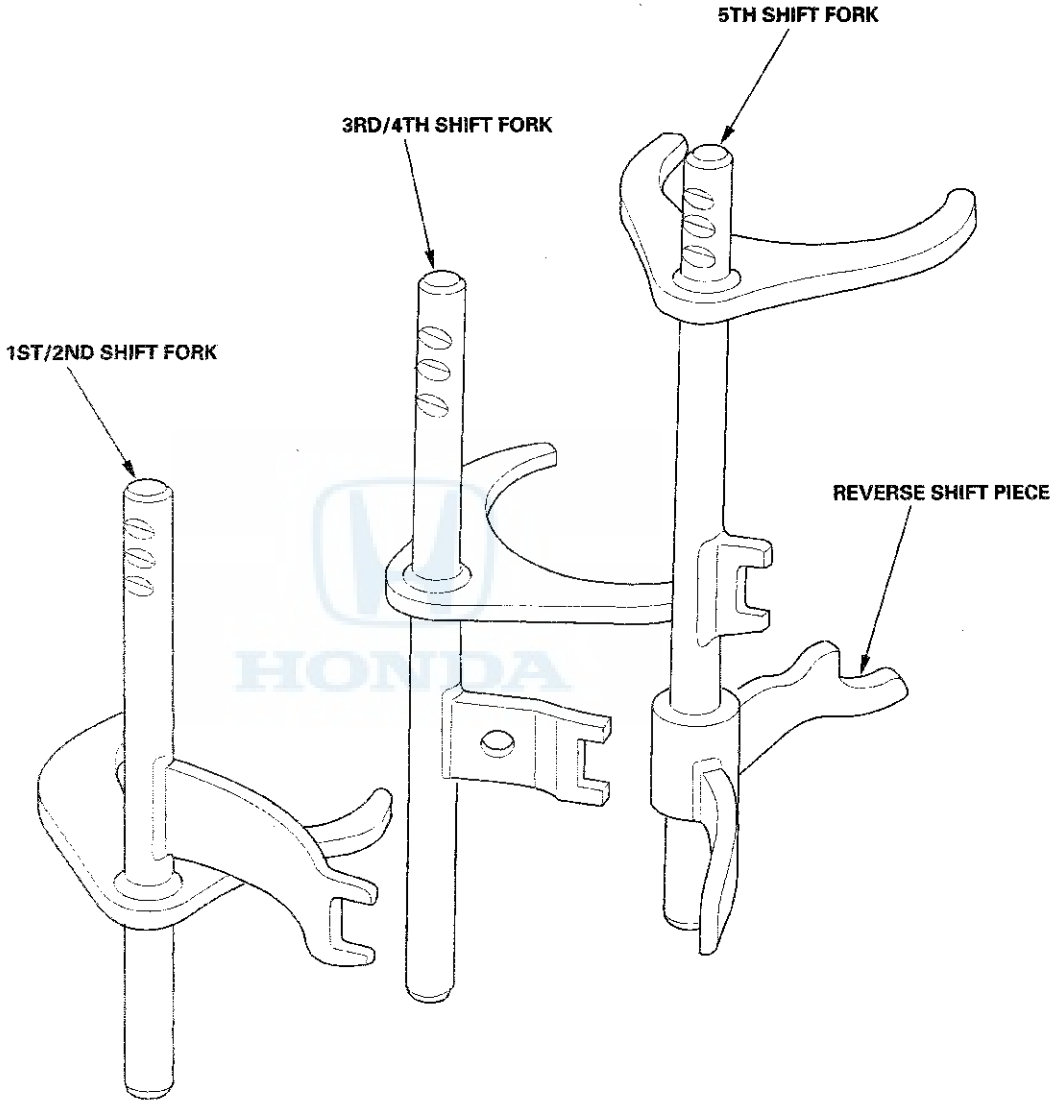

Mainshaft Assembly Clearance Inspection

1. Support the bearing inner race with an appropriate sized socket (A), and push down on the mainshaft (B).

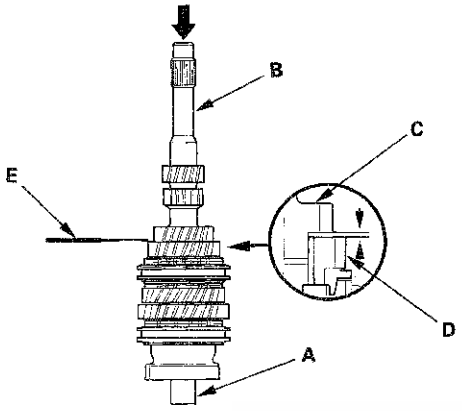

2. Measure the clearance between 2nd gear (C) and 3rd gear (D) with a feeler gauge (E).

   - If the clearance exceeds the service limit, go to step 3.
   - If the clearance is within the service limit, go to step 4.

   Standard: **0.06—0.16 mm (0.002—0.006 in.)**
   Service Limit: **0.25 mm (0.010 in.)**

3. Measure the thickness of 3rd gear.

   - If the thickness is less than the service limit, replace 3rd gear.
   - If the thickness is within the service limit, replace the 3rd/4th synchro hub and 3rd/4th synchro sleeve as a set.

   Standard: **23.92—23.97 mm (0.942—0.944 in.)**
   Service Limit: **23.80 mm (0.937 in.)**

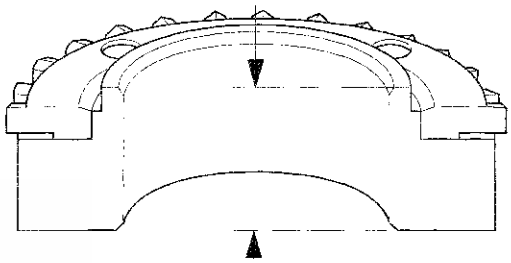

4. Measure the clearance between 4th gear (A) and the 4th/5th gear distance collar (B) with a dial indicator (C).

   - If the clearance exceeds the service limit, go to step 5.
   - If the clearance is within the service limit, go to step 7.

   Standard: **0.06—0.16 mm (0.002—0.006 in.)**
   Service Limit: **0.25 mm (0.010 in.)**

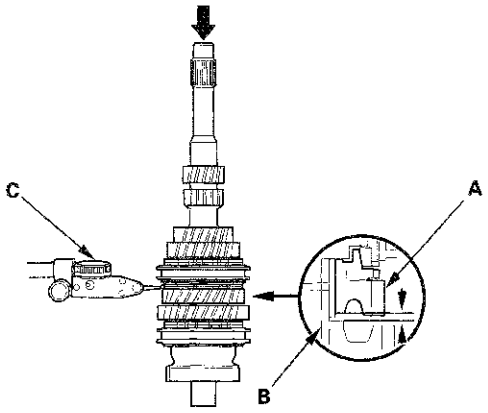

5. Measure the length ① of the 4th/5th gear distance collar as shown.

   - If the length ① is not within the standard, replace the 4th/5th gear distance collar.
   - If the length ① is within the standard, go to step 6.

   Standard: 24.03—24.08 mm (0.946—0.948 in.)

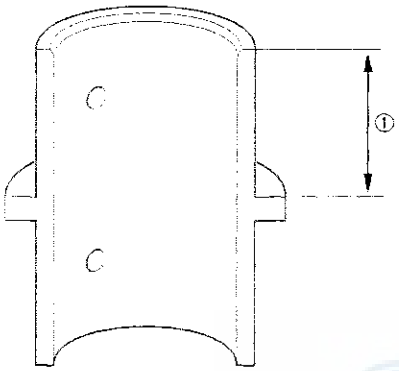

6. Measure the thickness of 4th gear.

   - If the thickness is less than the service limit, replace 4th gear.
   - If the thickness is within the service limit, replace the 3rd/4th synchro hub and 3rd/4th synchro sleeve as a set.

   Standard: 23.92—23.97 mm (0.942—0.944 in.)
   Service Limit: 23.80 mm (0.937 in.)

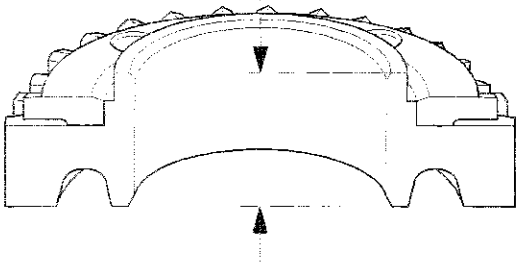

7. Measure the clearance between the 4th/5th gear distance collar (A) and 5th gear (B) with a dial indicator (C).

   - If the clearance exceeds the service limit, go to step 8.
   - If the clearance is within the service limit, go to step 10.

   Standard: 0.06—0.16 mm (0.002—0.006 in.)
   Service Limit: 0.25 mm (0.010 in.)

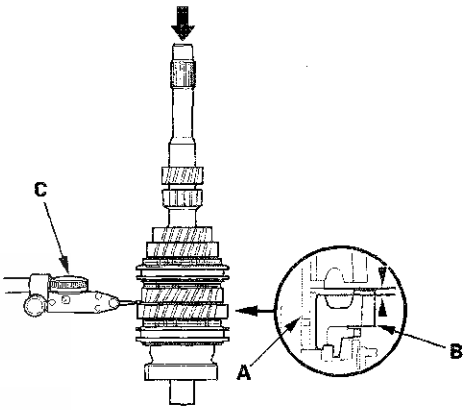

8. Measure the length ② of the 4th/5th gear distance collar as shown.

   - If the length ② is not within the standard, replace the 4th/5th gear distance collar.
   - If the length ② is within the standard, go to step 9.

   Standard: 24.03—24.08 mm (0.946—0.948 in.)

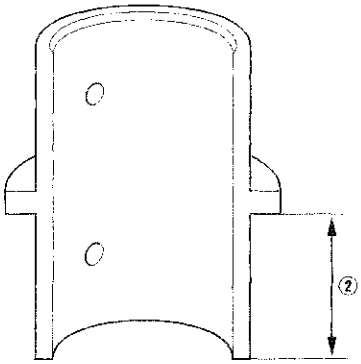

(cont'd)

Mainshaft Assembly Clearance Inspection (cont'd)

9. Measure the thickness of 5th gear.

   - If the thickness is less than the service limit, replace 5th gear.
   - If the thickness is within the service limit, replace the 5th synchro hub and 5th synchro sleeve as a set.

   Standard: 23.92—23.97 mm (0.942—0.944 in.)
   Service Limit: 23.80 mm (0.937 in.)

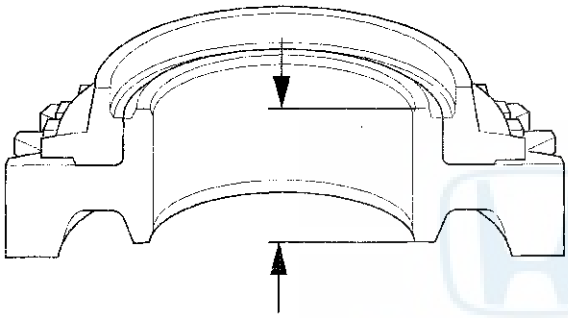

10. Measure the length of the MBS distance collar. If the length is not within standard, replace the MBS distance collar.

    Standard: 23.95—24.05 mm (0.943—0.947 in.)

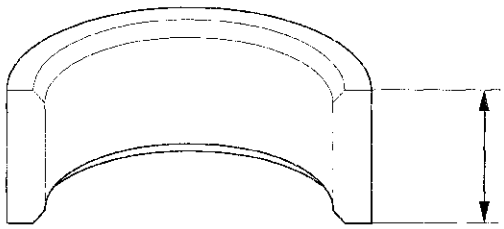

Mainshaft Disassembly

NOTE: Refer to the Exploded View in the Mainshaft Reassembly, as needed, when removing components pressed onto the mainshaft (see page 13-39).

1. Remove the angular ball bearing (A) and the tapered cone ring using a commercially available bearing separator (B) and a commercially available bearing puller (C). Make sure the bearing separator is under the tapered cone ring.

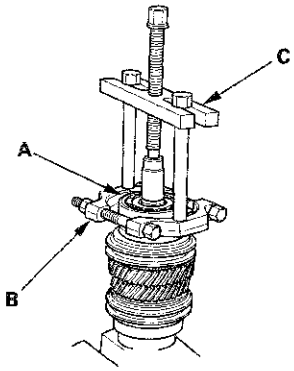

2. Support 5th gear (A) on steel blocks, and press the mainshaft out of the 5th synchro hub (B) and 5th gear.

   NOTE: Do not use a jaw-type puller; it can damage the gear teeth.

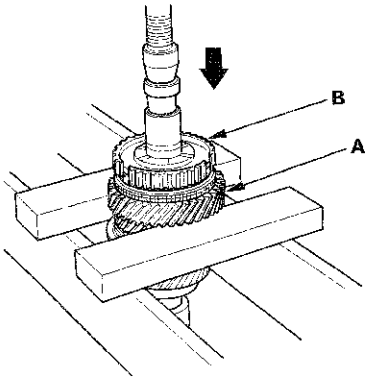

3. Support 3rd gear (A) on steel blocks, and press the mainshaft out of the 3rd/4th synchro hub (B) and 3rd gear.

   NOTE: Do not use a jaw-type puller; it can damage the gear teeth.

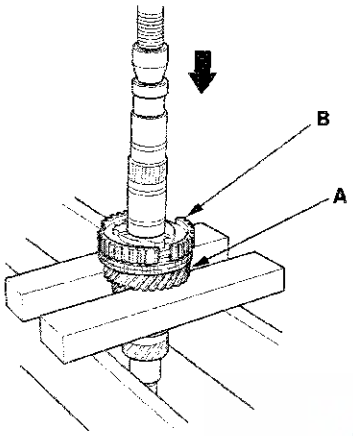

Mainshaft Inspection

1. Inspect the gear and bearing contact areas for wear and damage, then measure the mainshaft at points A, B, C, D, and E. If any part of the mainshaft is less than the service limit, replace it.

   Standard:
   A Ball Bearing Contact Area (Transmission Housing Side):
   27.987—28.000 mm (1.1019—1.1024 in.)
   B 4th/5th Gear Distance Collar Contact Area:
   31.984—32.000 mm (1.2592—1.2598 in.)
   C Needle Bearing Contact Area:
   38.984—39.000 mm (1.5348—1.5354 in.)
   D Ball Bearing Contact Area (Clutch Housing Side):
   27.977—27.990 mm (1.1015—1.1020 in.)
   E Bushing Contact Area:
   20.80—20.85 mm (0.819—0.821 in.)
   Service Limit:
   A: 27.93 mm (1.100 in.)
   B: 31.93 mm (1.257 in.)
   C: 38.93 mm (1.533 in.)
   D: 27.92 mm (1.099 in.)
   E: 20.75 mm (0.817 in.)

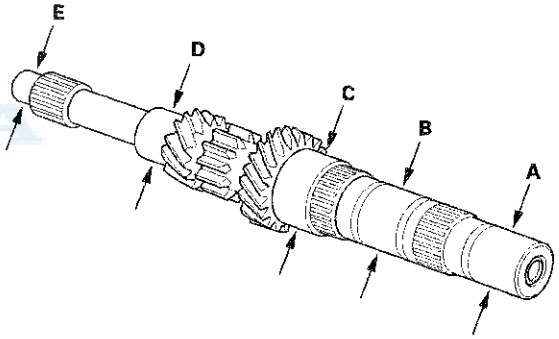

(cont'd)

Mainshaft Inspection (cont'd)

2. Inspect the runout by supporting both ends of the mainshaft. Then rotate the mainshaft two complete turns while measuring with a dial gauge. If the runout exceeds the service limit, replace the mainshaft.

   Standard: **0.02 mm (0.001 in.) max.**
   Service Limit: **0.05 mm (0.002 in.)**

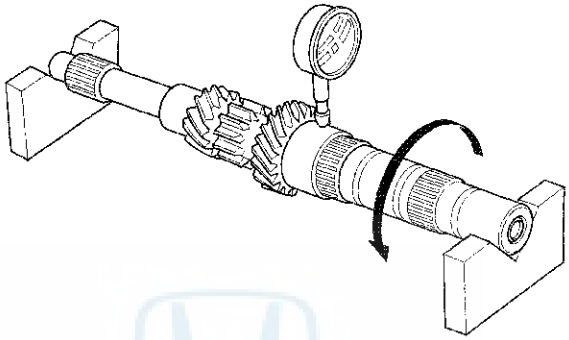

HONDA

Mainshaft Reassembly

Exploded View

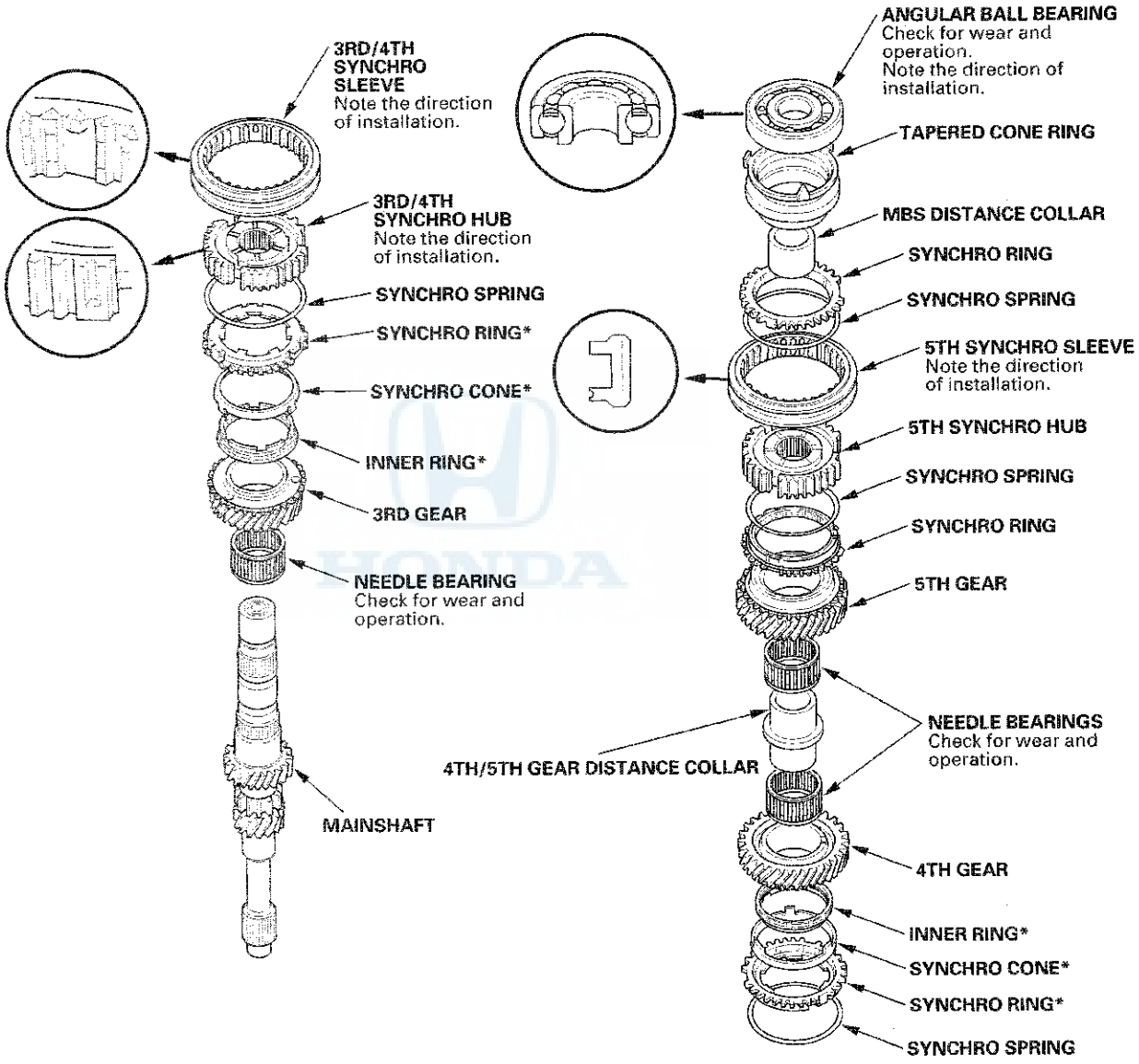

*: The components of the double cone synchro assembly.

(cont'd)

Mainshaft Reassembly (cont'd)

Special Tools Required
- Inner driver handle, 40 mm 07746-0030100
- Inner bearing driver attachment, 30 mm 07746-0030300

NOTE: Refer to the Exploded View, as needed, during this procedure.

1. Clean all the parts in solvent, dry them, and apply MTF to all contact surfaces.

2. Install the needle bearing (A) and 3rd gear (B) onto the mainshaft (C).

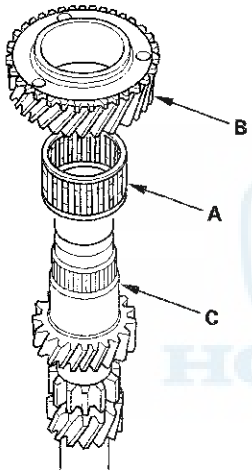

3. Install the double cone synchro assembly (A) with the synchro spring (B) by aligning the synchro cone fingers (C) with the holes (D) in 3rd gear.

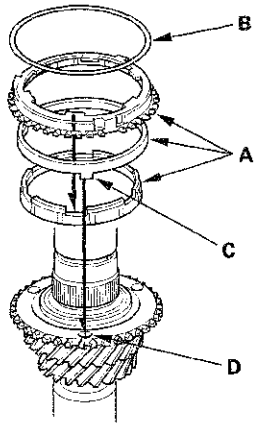

4. Install the 3rd/4th synchro hub (A) by aligning the synchro ring fingers (B) with the grooves (C) in the 3rd/4th synchro hub.

   NOTE: Make sure to install the 3rd/4th synchro hub in the direction shown.

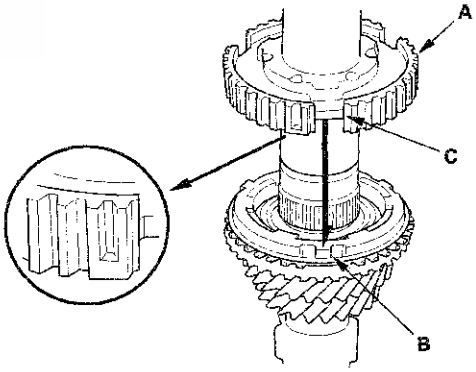

5. Press on the 3rd/4th synchro hub (A) using the 40 mm inner driver handle (B) and a press (C).

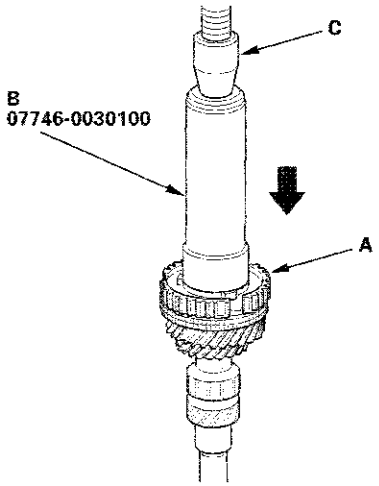

6. Install the 3rd/4th synchro sleeve (A) by aligning the stops (B) of the 3rd/4th synchro sleeve and the 3rd/4th synchro hub. After installing, check the operation of the 3rd/4th synchro hub set.

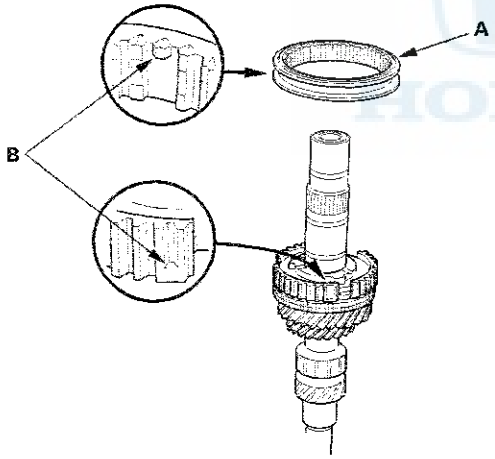

7. Install the double cone synchro assembly (A) with the synchro spring (B) by aligning the synchro ring fingers (C) with the grooves (D) in the 3rd/4th synchro hub.

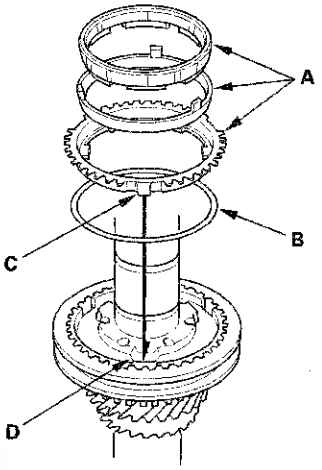

8. Install 4th gear (A) by aligning the synchro cone fingers (B) with the holes (C) in 4th gear.

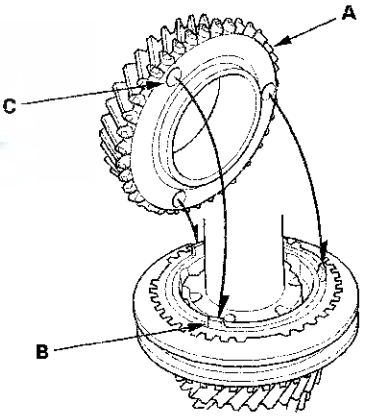

(cont'd)

Mainshaft Reassembly (cont'd)

9. Install the 4th/5th gear distance collar (A) with the needle bearings (B) and 5th gear (C).

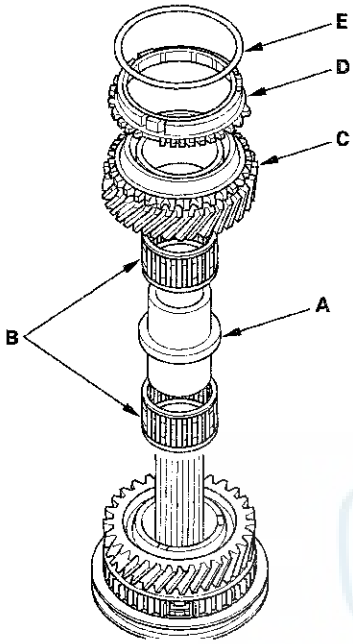

10. Install the synchro ring (D) with the synchro spring (E) onto 5th gear.

11. Install the 5th synchro hub (A) by aligning the synchro ring fingers (B) with the grooves (C) in the 5th synchro hub.

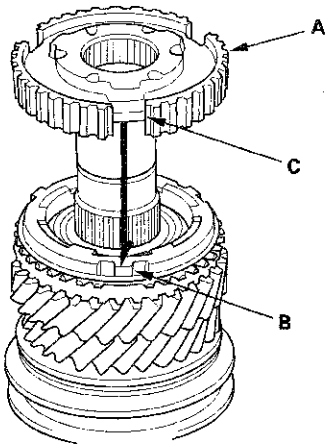

12. Press on the 5th synchro hub (A) using the 40 mm inner driver handle (B), the 30 mm inner bearing driver attachment (C), and a press (D).

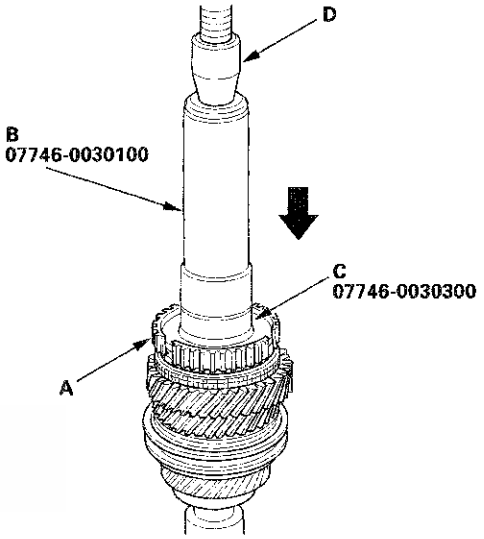

13. Install the 5th synchro sleeve (A) by aligning the slots of the 5th synchro sleeve and the 5th synchro hub (B). After installing, check the operation of the 5th synchro hub set.

NOTE: Make sure to align the slots in the 5th synchro hub as shown.

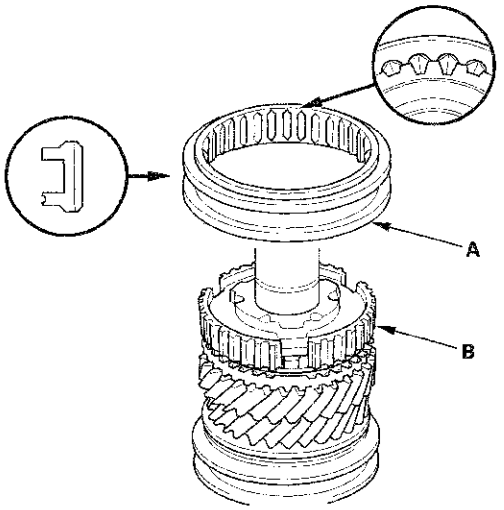

14. Install the synchro ring (A) with the synchro spring (B) by aligning the synchro ring fingers (C) with the grooves (D) in the 5th synchro hub.

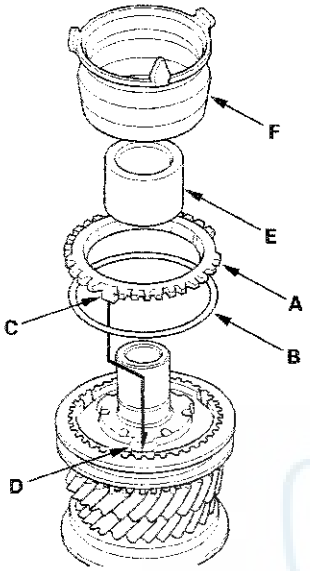

15. Install the MBS gear distance collar (E) and the tapered cone ring (F).

16. Press on the new angular ball bearing (A) using the 40 mm inner driver handle (B), the 30 mm inner bearing driver attachment (C), and a press (D).

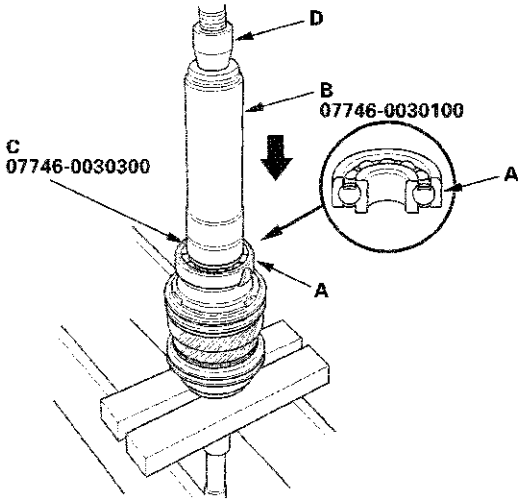

Countershaft Assembly Clearance Inspection

NOTE: Before inspection, make sure the special bolt is tightened to the specified torque (see page 13-47).

1. Measure the clearance between 1st gear (A) and the 1st gear distance collar (B) with a feeler gauge (C).

   - If the clearance exceeds the service limit, go to step 2.
   - If the clearance is within the service limit, go to step 4.

   Standard: 0.06—0.16 mm (0.002—0.006 in.)
   Service Limit: 0.25 mm (0.010 in.)

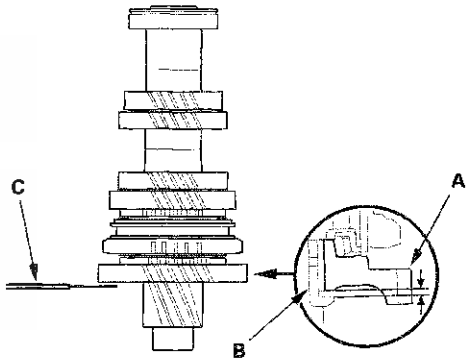

2. Measure the length of the 1st gear distance collar as shown.

   - If the length is not within the standard, replace the 1st gear distance collar.
   - If the length is within the standard, go to step 3.

   Standard: 23.03—23.08 mm (0.907—0.909 in.)

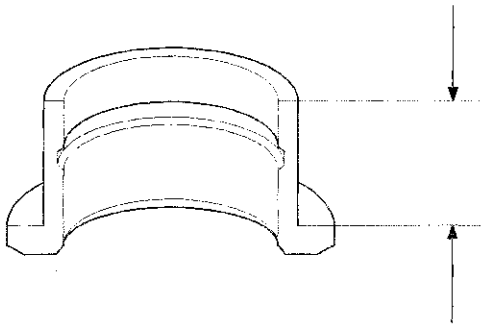

(cont'd)

Countershaft Assembly Clearance Inspection (cont'd)

3. Measure the thickness of 1st gear.

   - If the thickness is less than the service limit, replace 1st gear.
   - If the thickness is within the service limit, replace the 1st/2nd synchro hub and reverse gear as a set.

   Standard: 22.92—22.97 mm (0.902—0.904 in.)
   Service Limit: 22.87 mm (0.900 in.)

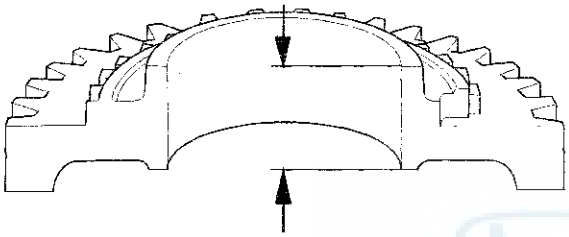

4. Measure the clearance between 2nd gear (A) and 3rd gear (B) with a feeler gauge (C). If the clearance exceeds the service limit, go to step 5.

   Standard: 0.06—0.16 mm (0.002—0.006 in.)
   Service Limit: 0.25 mm (0.010 in.)

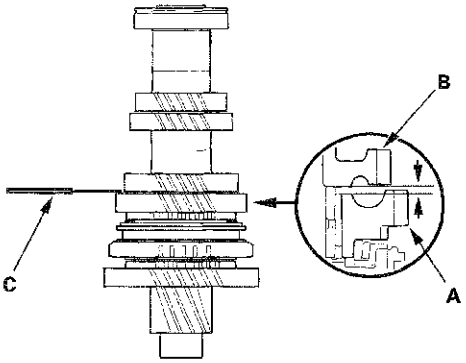

5. Measure the length of the 2nd gear distance collar.

   - If the length is not within the standard, replace the 2nd gear distance collar.
   - If the length is within the standard, go to step 6.

   Standard: 28.03—28.08 mm (1.104—1.106 in.)

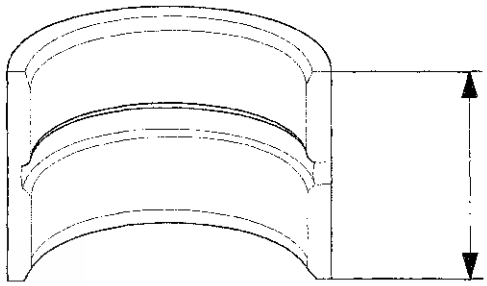

6. Measure the thickness of 2nd gear.

   - If the thickness is less than the service limit, replace 2nd gear.
   - If the thickness is within the service limit, replace the 1st/2nd synchro hub and reverse gear as a set.

   Standard: 27.92—27.97 mm (1.099—1.101 in.)
   Service Limit: 27.87 mm (1.097 in.)

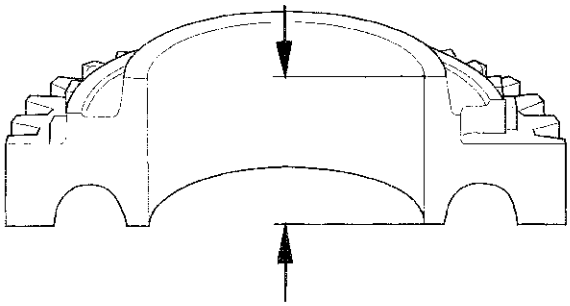

Countershaft Disassembly

NOTE: Refer to the Exploded View in the Countershaft Reassembly, as needed, when removing components pressed onto the countershaft (see page 13-47).

1. Securely clamp the countershaft assembly in a bench vise with wood blocks.

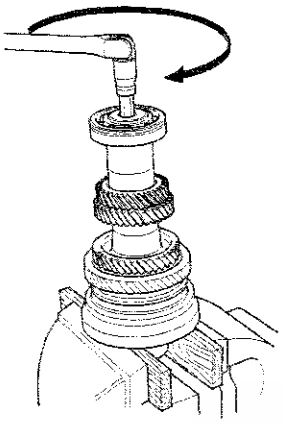

2. Remove the special bolt (left-hand threads).

3. Support the ball bearing (A) on steel blocks (B), then use a press (C) and an attachment (D) to press the countershaft out of the ball bearing.

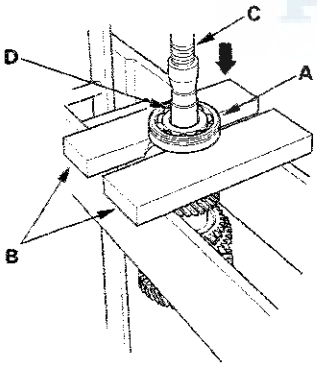

4. Remove the 35 mm shim and the distance collar.

5. Support 4th gear (A) on steel blocks (B), then use a press (C) and an attachment (D) to press the countershaft (E) out of 4th gear and 5th gear.

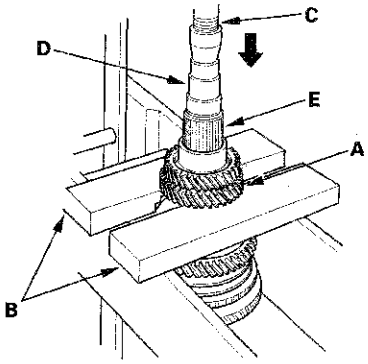

6. Support 2nd gear (A) on steel blocks (B), then use a press (C) and an attachment (D) to press the countershaft (E) out of 2nd gear and 3rd gear.

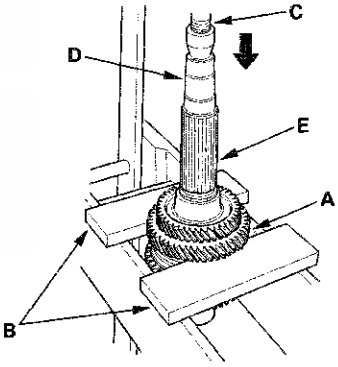

Countershaft Inspection

1. Inspect the gear and bearing contact areas for wear and damage, then measure the countershaft at points A, B, and C. If any part of the countershaft is less than the service limit, replace it.

   Standard:
   A Ball Bearing Contact Area
   (Transmission Housing Side):
   30.020—30.033 mm (1.1819—1.1824 in.)
   B 1st Gear Distance Collar Contact Area:
   39.937—39.950 mm (1.5723—1.5728 in.)
   C Needle Bearing Contact Area
   (Clutch Housing Side):
   40.000—40.015 mm (1.5748—1.5754 in.)
   Service Limit:
   A: 29.97 mm (1.180 in.)
   B: 39.88 mm (1.570 in.)
   C: 39.95 mm (1.573 in.)

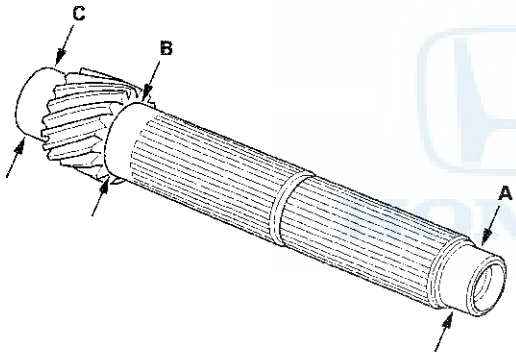

2. Inspect the runout by supporting both ends of the countershaft. Then rotate the countershaft two complete turns while measuring with a dial gauge. If the runout exceeds the service limit, replace the countershaft.

   Standard: 0.02 mm (0.001 in.) max.
   Service Limit: 0.05 mm (0.002 in.)

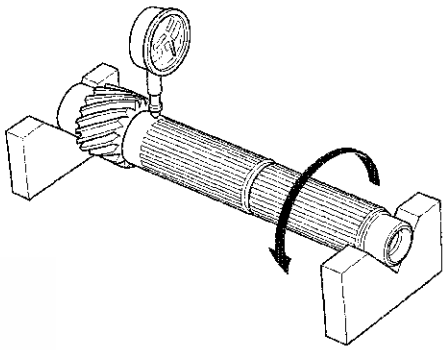

Countershaft Reassembly

Exploded View

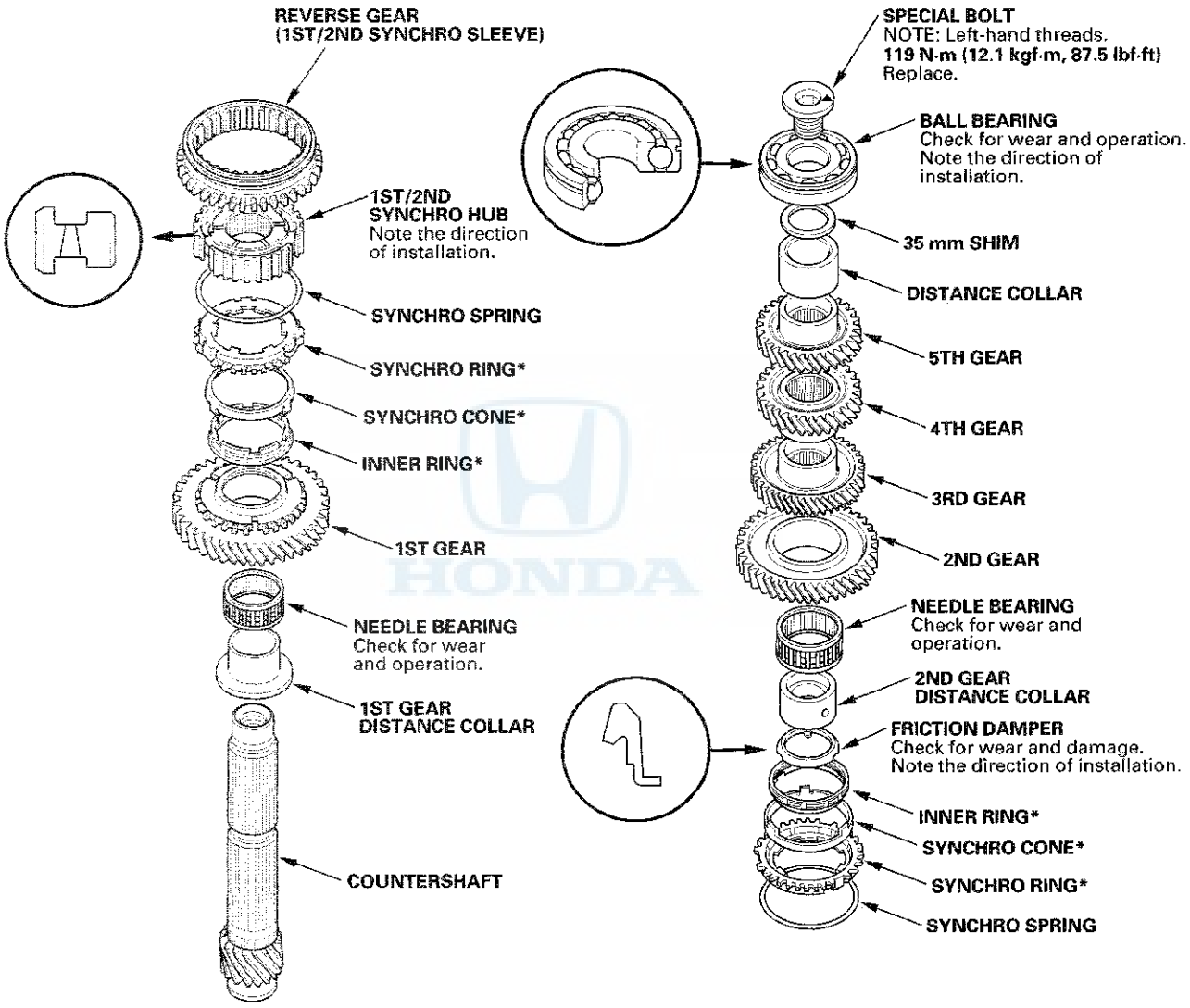

*: The components of the triple cone synchro assembly.

(cont'd)

Countershaft Reassembly (cont'd)

Special Tools Required
- Inner driver handle, 40 mm 07746-0030100
- Inner bearing driver attachment, 30 mm 07746-0030300

NOTE: Refer to the Exploded View, as needed, during this procedure.

1. Clean all parts in solvent, dry them, and apply MTF to all contact surfaces.

2. Install the 1st gear distance collar (A) with the needle bearing (B) and 1st gear (C) onto the countershaft (D).

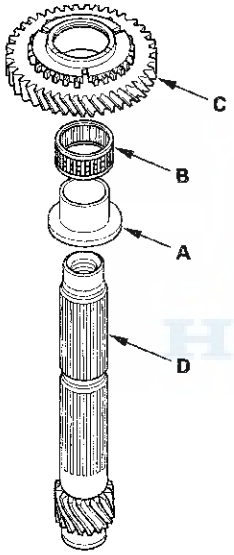

3. Install the triple cone synchro assembly (A) with the synchro spring (B) by aligning the synchro cone fingers (C) with the grooves (D) in 1st gear.

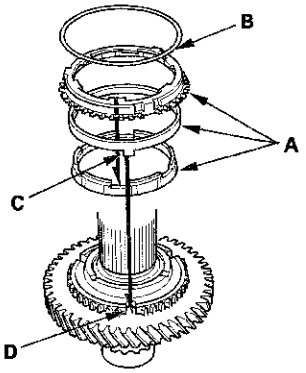

4. Install the 1st/2nd synchro hub (A) by aligning the synchro ring fingers (B) with the grooves (C) in the 1st/2nd synchro hub.

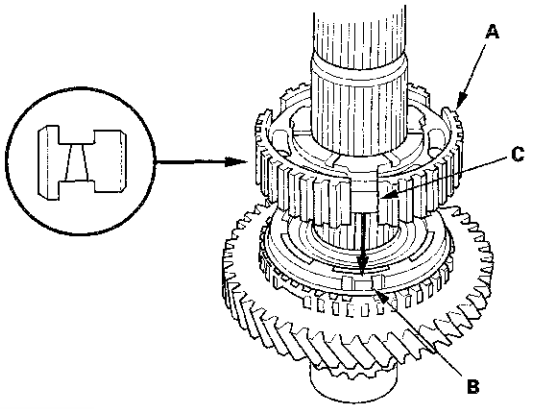

5. Install reverse gear (A) by aligning the slots of reverse gear and the 1st/2nd synchro hub (B). After installing, check the operation of the 1st/2nd synchro hub set.

   NOTE: Make sure to align the slots in the 1st/2nd synchro hub as shown.

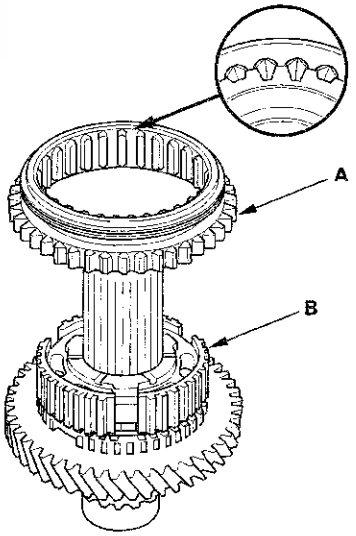

6. Install the triple cone synchro assembly (A) with the synchro spring (B) by aligning the synchro ring fingers (C) with the grooves (D) in the 1st/2nd synchro hub.

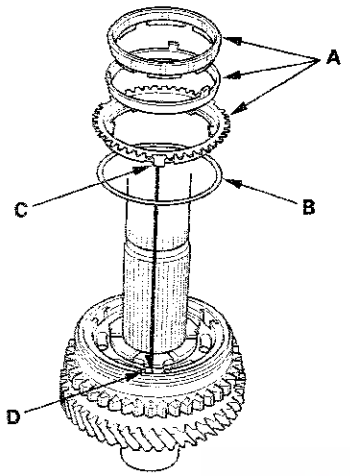

7. Install the 2nd gear distance collar (A) and friction damper (B) by aligning the friction damper fingers (C) with the grooves (D) in the 1st/2nd synchro hub.

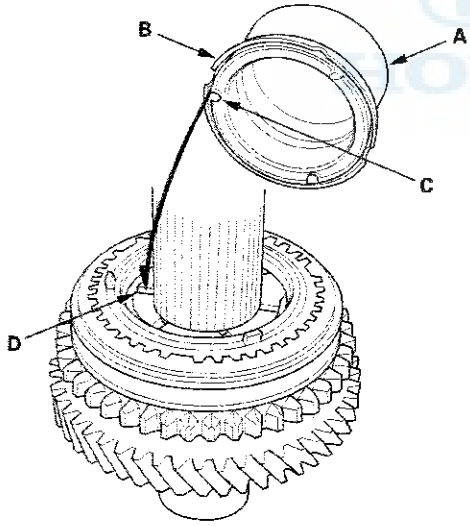

8. Install the needle bearing (A).

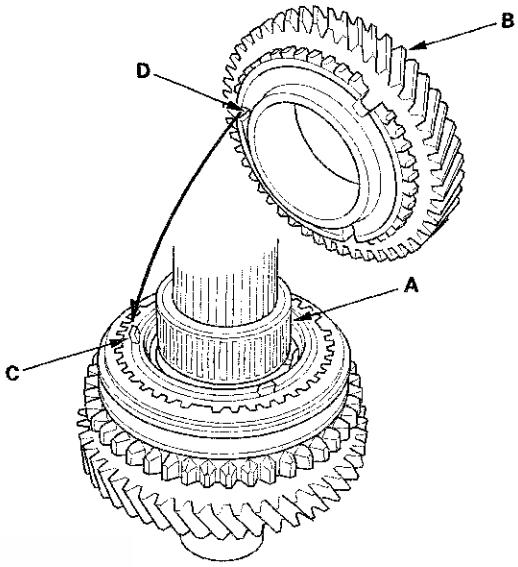

9. Install 2nd gear (B) by aligning the synchro cone fingers (C) with the grooves (D) in 2nd gear.

10. Support the countershaft (A) on steel blocks, then press on 3rd gear (B) using the 40 mm inner driver handle (C) and a press (D).

NOTE: Do not exceed the maximum pressure.

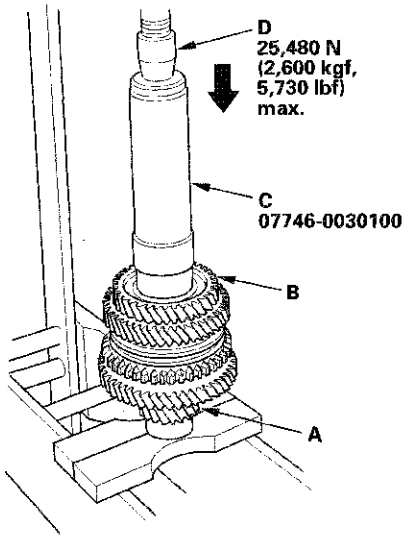

(cont'd)

Countershaft Reassembly (cont'd)

11. Press on 4th gear (A) using the 40 mm inner driver handle (B) and a press (C).

    NOTE: Do not exceed the maximum pressure.

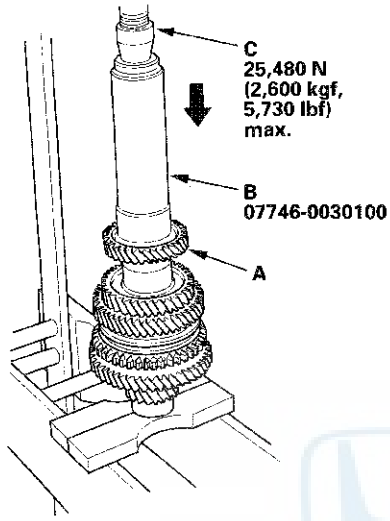

12. Press on 5th gear (A) using the 40 mm inner driver handle (B) and a press (C).

    NOTE: Do not exceed the maximum pressure.

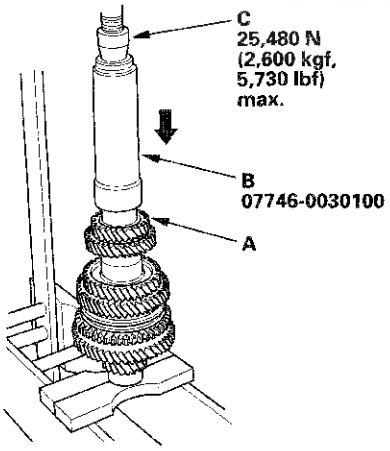

13. Install the distance collar (A), the 35 mm shim (B), and temporarily press on the used old ball bearing (C) using the 40 mm inner driver handle (D), the 30 mm inner bearing driver attachment (E), and a press (F).

    NOTE:
    - Use any size of 35 mm shim, and note size you used. Measurements taken in the following steps will determine the correct shim to use for final assembly.
    - Make sure the ball bearing is installed in the correct direction.

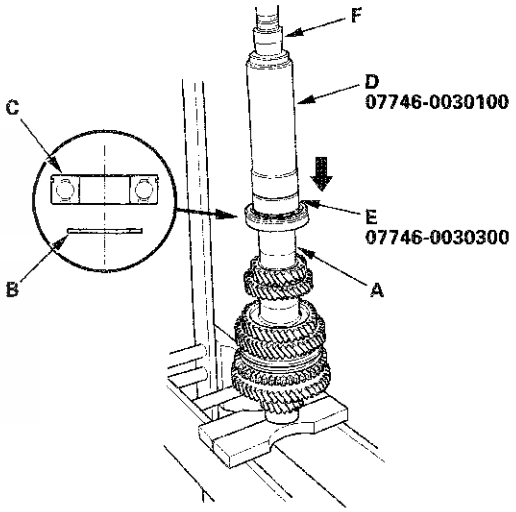

14. Measure the clearance between the bearing (A) and the 35 mm shim (B) with a feeler gauge (C).

Standard: 0.04—0.10 mm (0.0016—0.0039 in.)

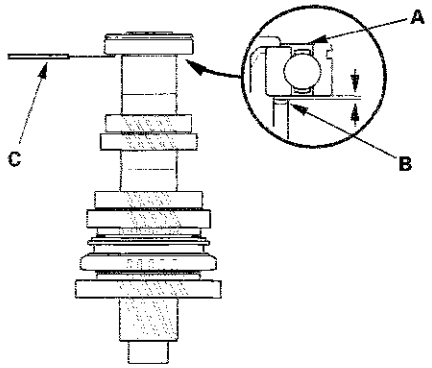

15. If the measured clearance in step 14 is not within the standard, select another suitable 35 mm shim from the table, then go to next step to replace the 35 mm shim and the ball bearing with a new one. If the measured clearance in step 14 is within the standard, go to the next step to replace the only the ball bearing with a new one.

35 mm Shim

Type	Part Number	Thickness
A	23981-PPP-000	0.87 mm (0.034 in.)
AA	23981-PPP-900	0.91 mm (0.036 in.)
B	23982-PPP-000	0.95 mm (0.037 in.)
AB	23982-PPP-900	0.99 mm (0.039 in.)
C	23983-PPP-000	1.03 mm (0.041 in.)
AC	23983-PPP-900	1.07 mm (0.042 in.)
D	23984-PPP-000	1.11 mm (0.044 in.)
AD	23984-PPP-900	1.15 mm (0.045 in.)
E	23985-PPP-000	1.19 mm (0.047 in.)
AE	23985-PPP-900	1.23 mm (0.048 in.)
F	23986-PPP-000	1.27 mm (0.050 in.)
AF	23986-PPP-900	1.31 mm (0.052 in.)
G	23987-PPP-000	1.35 mm (0.053 in.)
AG	23987-PPP-900	1.39 mm (0.055 in.)
H	23988-PPP-000	1.43 mm (0.056 in.)
AH	23988-PPP-900	1.47 mm (0.058 in.)
J	23989-PPP-000	1.51 mm (0.060 in.)
AJ	23989-PPP-900	1.55 mm (0.061 in.)
K	23990-PPP-000	1.59 mm (0.063 in.)
AK	23990-PPP-900	1.63 mm (0.064 in.)
L	23991-PPP-000	1.67 mm (0.066 in.)
AL	23991-PPP-900	1.71 mm (0.067 in.)
M	23992-PPP-000	1.75 mm (0.069 in.)
AM	23992-PPP-900	1.79 mm (0.070 in.)
N	23993-PPP-000	1.83 mm (0.072 in.)
AN	23993-PPP-900	1.87 mm (0.074 in.)
P	23994-PPP-000	1.91 mm (0.075 in.)
AP	23994-PPP-900	1.95 mm (0.077 in.)
Q	23995-PPP-000	1.99 mm (0.078 in.)

(cont'd)

Countershaft Reassembly (cont'd)

16. Remove the ball bearing and the 35 mm shim using a press (see step 3 on page 13-45).

17. Install the correct 35 mm shim (A) and new ball bearing (B) using the 40 mm inner driver handle (C), the 30 mm inner bearing driver attachment (D), and a press (E).

    NOTE:
    - If necessary, replace the 35 mm shim with the correct one selected in step 15.
    - Make sure the ball bearing is installed in the correct direction.

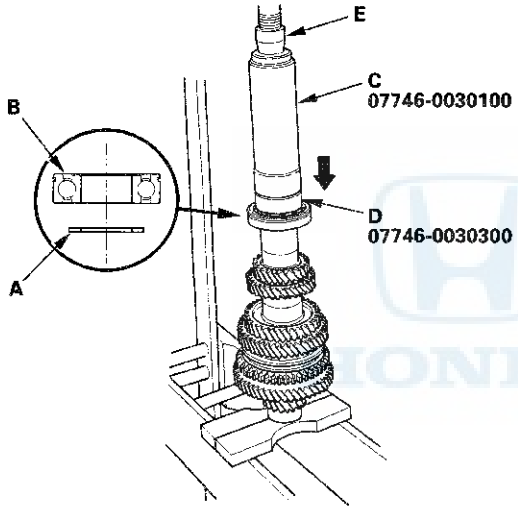

18. Check the clearance between the bearing and the 35 mm shim with a feeler gauge.

19. Securely clamp the countershaft assembly in a bench vise with wood blocks (A).

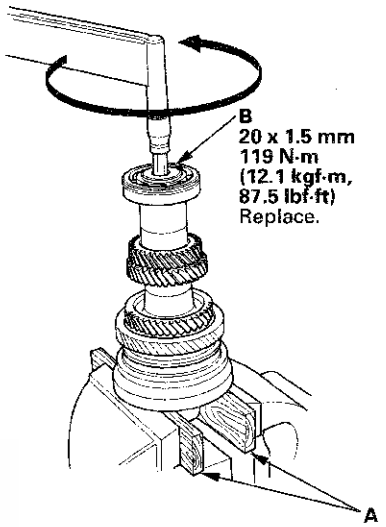

20. Tighten the new special bolt (B) (left-hand threads).

    NOTE: Apply new MTF to the bolt threads and flange.

Synchro Sleeve and Hub Inspection and Reassembly

1. Inspect the gear teeth on all synchro hubs and synchro sleeves for wear (rounded off corners).

2. Install each synchro hub (A) in its mating synchro sleeve (B), and check for free movement. Make sure to match the three sets of longer teeth (C) (120 degrees apart) on the synchro sleeve with the three sets of deeper grooves (D) in the synchro hub.

   NOTE:
   - Do not install the synchro sleeve with its longer teeth in the 1st/2nd and 5th synchro hub slots (E) because it will damage the spring ring.
   - If replacement is required, always replace the synchro sleeve and synchro hub as a set.

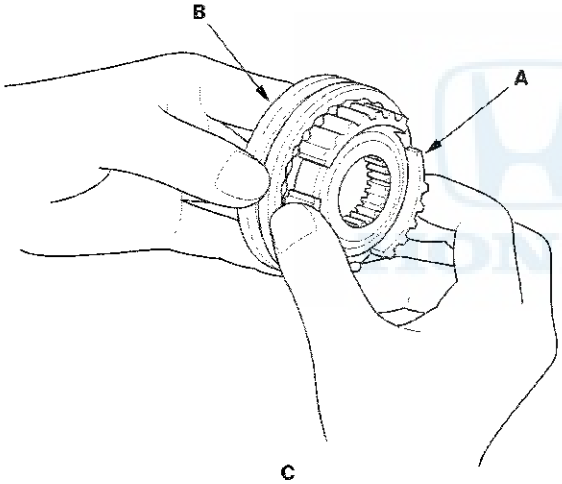

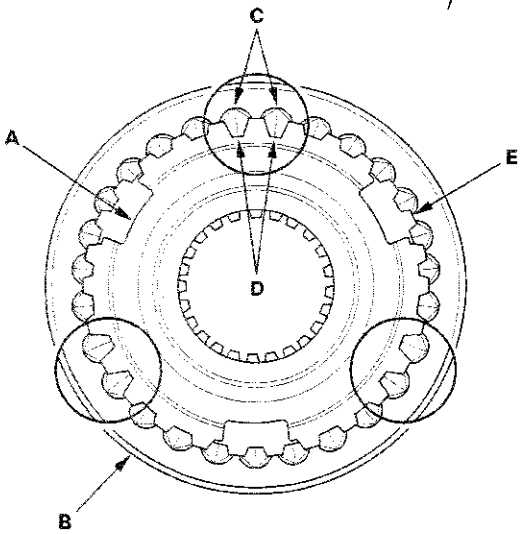

Synchro Ring and Gear Inspection

1. Inspect the synchro rings for scoring, cracks, and damage (A).

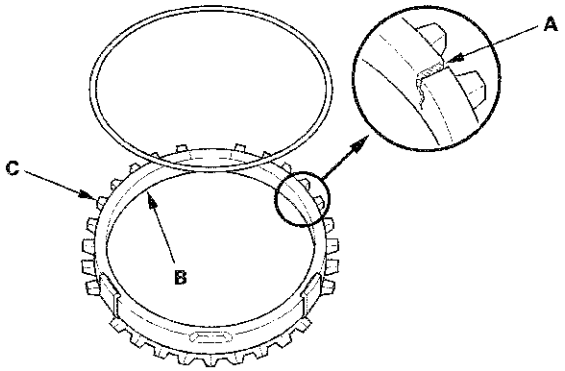

Example of synchro ring teeth

2. Inspect the inside of each synchro ring (B) for wear. Inspect the teeth (C) on each synchro ring for wear (rounded off).

3. Inspect the teeth (A) on each synchro sleeve and matching teeth on each gear for wear (rounded off).

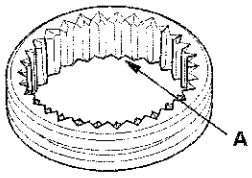

Example of synchro sleeve teeth and gear teeth

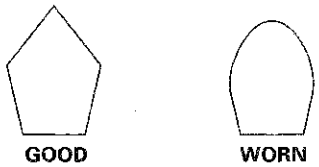

(cont'd)

Synchro Ring and Gear Inspection (cont'd)

4. Inspect the synchro teeth on gear for scoring, cracks, and damage (A).

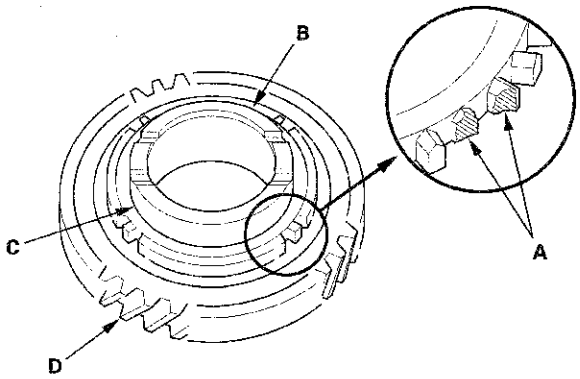

5. Inspect the thrust surface (B) on each gear hub for wear.

6. Inspect the cone surface (C) on each gear hub for wear and roughness.

7. Inspect the teeth on all gears (D) for uneven wear, scoring, and cracks.

8. Coat the cone surface of each gear with MTF, and place its synchro ring on it. Rotate the synchro ring, making sure that it does not slip.

9. Measure the clearance between each gear (A) and its synchro ring (B) all around the gear. Hold the synchro ring against the gear evenly while measuring the clearance. If the clearance is less than the service limit, replace the synchro ring and gear.

Synchro Ring-to-Gear Clearance
Standard: 0.70—1.49 mm (0.028—0.059 in.)
Service Limit: 0.4 mm (0.016 in.)

Double Cone Synchro and Triple Cone Synchro-to-Gear Clearance
Standard:
①: Outer Synchro Ring (B) to Synchro Cone (C) 0.70—1.19 mm (0.028—0.047 in.)
②: Synchro Cone (C) to Gear (A) 0.50—1.04 mm (0.020—0.041 in.)
③: Outer Synchro Ring (B) to Gear (A) 0.95—1.68 mm (0.037—0.066 in.)
Service Limit:
①: 0.3 mm (0.012 in.)
②: 0.3 mm (0.012 in.)
③: 0.6 mm (0.024 in.)

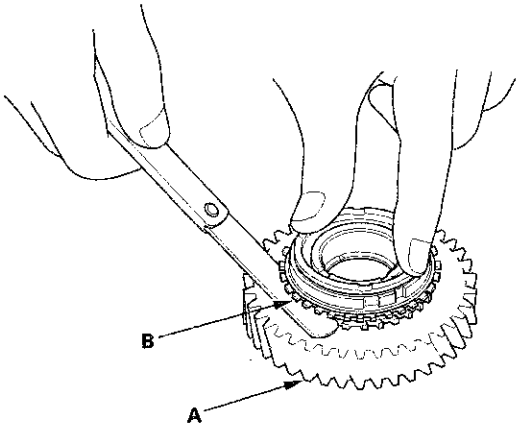

Synchro ring-to-gear

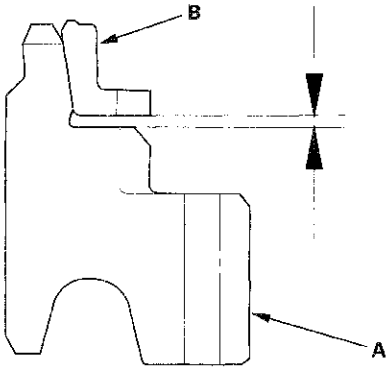

Double cone synchro and triple cone synchro-to-gear

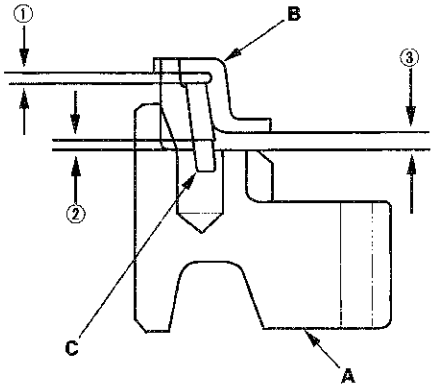

Mainshaft Bearing and Oil Seal Replacement

Special Tools Required
- Oil seal driver, 65 mm 07JAD-PL90100
- Adjustable bearing puller, 20—40 mm 07736-A01000B
- Bearing driver attachment, 42 x 47 mm 07746-0010300
- Driver handle, 15 x 135L 07749-0010000
- Slide hammer, 3/8"-16 UNF commercially available

1. Remove the ball bearing (A) from the clutch housing (B) using the 20—40 mm adjustable bearing puller (C) and a commercially available 3/8"-16 UNF slide hammer (D).

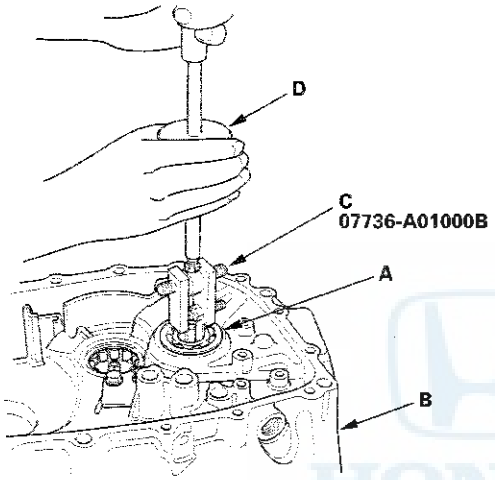

2. Remove the oil seal (A) from the clutch housing. Be careful when removing the oil seal so the clutch housing is not damaged.

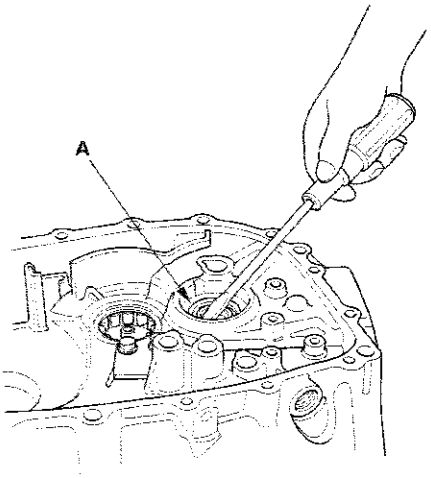

3. Drive in the new oil seal from the transmission side using the 15 x 135L driver handle (A) and the 42 x 47 mm bearing driver attachment (B).

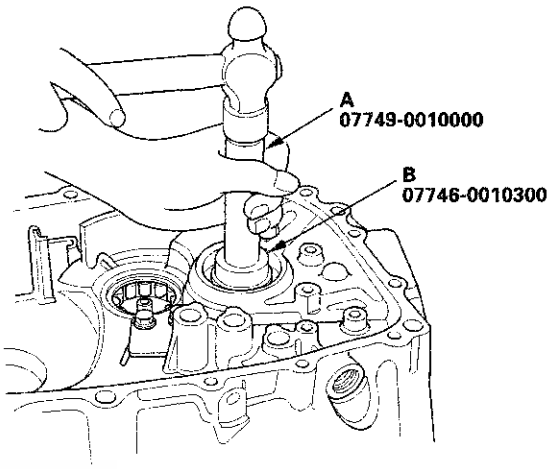

4. Drive in the new ball bearing (A) from the transmission side using the 65 mm oil seal driver (B).

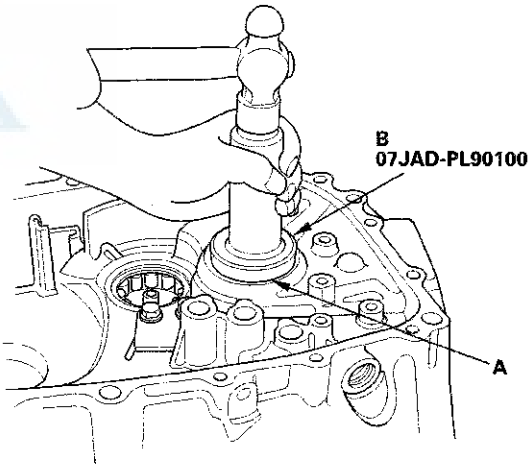

Countershaft Bearing Replacement

Special Tools Required
- Oil seal driver, 65 mm 07JAD-PL90100
- Adjustable bearing puller, 20—40 mm 07736-A01000B
- Slide hammer, 3/8"-16 UNF commercially available

1. Remove the bearing set plate (A) from the clutch housing (B).

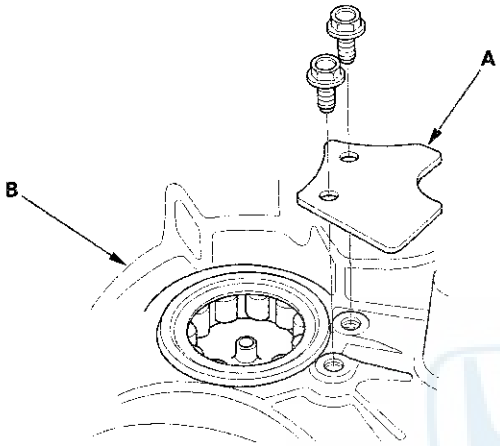

2. Remove the needle bearing (A) using the 20—40 mm adjustable bearing puller (B) and a commercially available 3/8"-16 UNF slide hammer (D), then remove oil guide plate C.

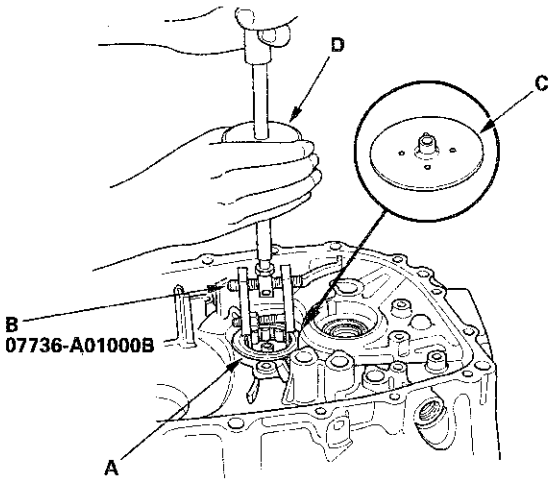

3. Position oil guide plate C and the new needle bearing (A) in the bore of the clutch housing (B).

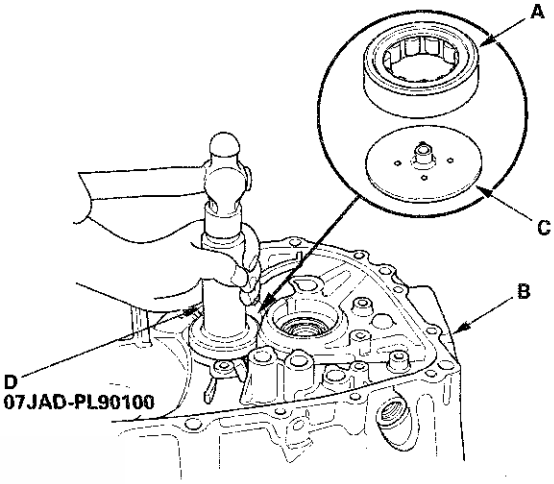

4. Install the needle bearing using the 65 mm oil seal driver (D).

5. Install the bearing set plate (A) with bolts (B).

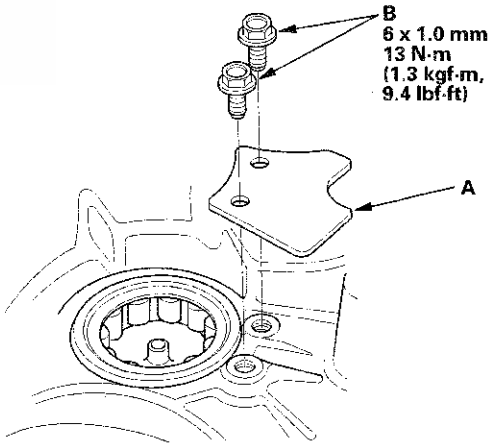

Mainshaft Thrust Clearance Adjustment

Special Tools Required
- Catch adapter 07GAJ-PG20110
- Base adapter 07GAJ-PG20130

1. Remove the 72 mm shim (A) and oil guide plate M from the transmission housing (B).

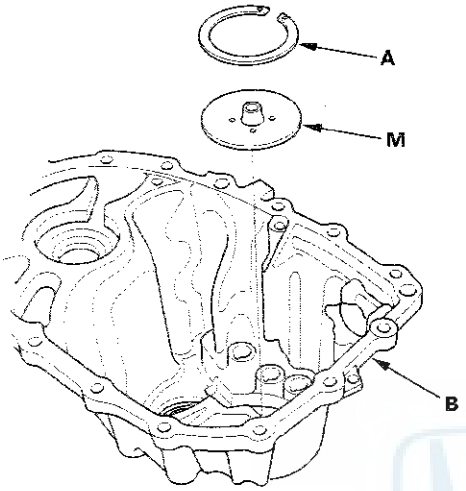

2. Thoroughly clean the 28 mm spring washer (A) and the 28 mm washer (B) before installing them on the clutch housing side ball bearing (C). Note the installation direction of the spring washer.

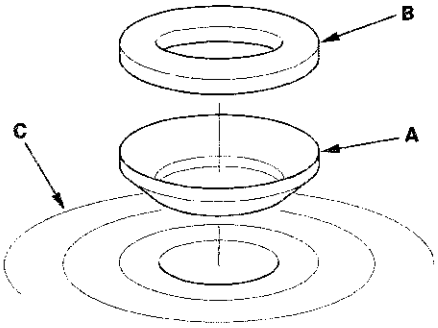

3. Assemble all of the mainshaft components.

   NOTE: Refer to the Exploded View, as needed, during the assembly (see page 13-39).

4. Install the mainshaft assembly into the clutch housing.

5. Place the transmission housing over the mainshaft and onto the clutch housing.

6. Tighten the clutch and transmission housings with several 8 mm bolts.

   NOTE: It is not necessary to use sealing agent between the housing for this procedure.

7. Lightly tap on the mainshaft with a plastic hammer.

(cont'd)

Mainshaft Thrust Clearance Adjustment (cont'd)

8. Attach the catch adapter (A) and base adapter (B) to the mainshaft as follows:

   - Back out the catch adapter bolt (C), and loosen the two hex bolts (D).
   - Fit the holder over the mainshaft so its lip is towards the transmission.
   - Align the catch adapter lip around the groove at the inside of the mainshaft splines, then tighten the hex bolts.

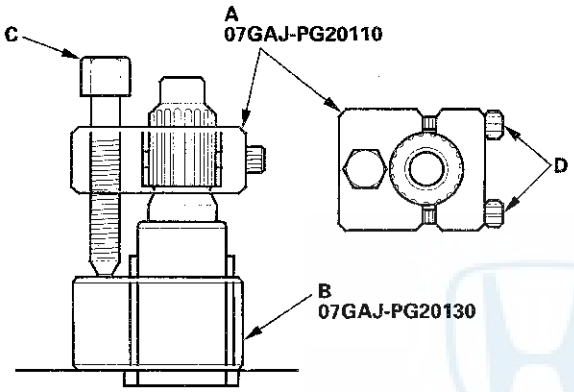

9. Fully seat the mainshaft by tapping its end with a plastic hammer.

10. Thread the catch adapter bolt in until it just contacts the wide surface of the base adapter.

11. Zero a dial gauge (A) on the end of the mainshaft.

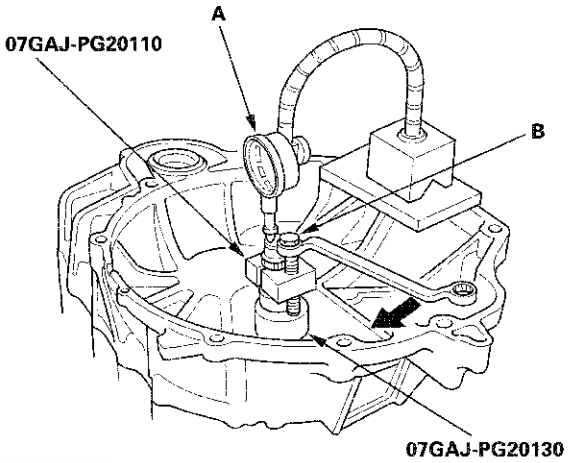

12. Turn the catch adapter bolt (B) clockwise; stop turning when the dial gauge has reached its maximum movement. The reading on the dial gauge is the amount of mainshaft thrust clearance.

    NOTE: Do not turn the catch adapter bolt more than 60 degrees after the needle of the dial gauge stops moving. Applying more pressure with the catch adapter bolt could damage the transmission.

13. If the reading is within the standard, the clearance is correct. If the reading is not within the standard, select the appropriate shim needed from the table, and recheck the thrust clearance.

Standard: 0.11—0.17 mm (0.004—0.007 in.)

(Example)
Measure reading: 1.93 mm (0.076 in.)

Subtract the total clearance measurement from the middle of the clearance standard 0.14 mm (0.0056 in.).

1.93 — 0.14 (0.076—0.006) = 1.79 mm (0.070 in.)

Select the shim closest to the amount calculated, for example the 1.80 mm (0.071 in.) shim.

14. With oil guide plate M and the appropriate size shim installed in the transmission housing, check the thrust clearance again to verify the clearance is within the standard.

72 mm Shim

Type	Part Number	Thickness
A	23931-P21-000	0.60 mm (0.024 in.)
B	23932-P21-000	0.63 mm (0.025 in.)
C	23933-P21-000	0.66 mm (0.026 in.)
D	23934-P21-000	0.69 mm (0.027 in.)
E	23935-P21-000	0.72 mm (0.028 in.)
F	23936-P21-000	0.75 mm (0.030 in.)
G	23937-P21-000	0.78 mm (0.031 in.)
H	23938-P21-000	0.81 mm (0.032 in.)
I	23939-P21-000	0.84 mm (0.033 in.)
J	23940-P21-000	0.87 mm (0.034 in.)
K	23941-P21-000	0.90 mm (0.035 in.)
L	23942-P21-000	0.93 mm (0.037 in.)
M	23943-P21-000	0.96 mm (0.038 in.)
N	23944-P21-000	0.99 mm (0.039 in.)
O	23945-P21-000	1.02 mm (0.040 in.)
P	23946-P21-000	1.05 mm (0.041 in.)
Q	23947-P21-000	1.08 mm (0.043 in.)
R	23948-P21-000	1.11 mm (0.044 in.)
S	23949-P21-000	1.14 mm (0.045 in.)
T	23950-P21-000	1.17 mm (0.046 in.)
U	23951-P21-000	1.20 mm (0.047 in.)
V	23952-P21-000	1.23 mm (0.048 in.)
W	23953-P21-000	1.26 mm (0.050 in.)
X	23954-P21-000	1.29 mm (0.051 in.)
Y	23955-P21-000	1.32 mm (0.052 in.)
Z	23956-P21-000	1.35 mm (0.053 in.)

72 mm Shim

Type	Part Number	Thickness
AA	23957-P21-000	1.38 mm (0.054 in.)
AB	23958-P21-000	1.41 mm (0.056 in.)
AC	23959-P21-000	1.44 mm (0.057 in.)
AD	23960-P21-000	1.47 mm (0.058 in.)
AE	23961-P21-000	1.50 mm (0.059 in.)
AF	23962-P21-000	1.53 mm (0.060 in.)
AG	23963-P21-000	1.56 mm (0.061 in.)
AH	23964-P21-000	1.59 mm (0.063 in.)
AI	23965-P21-000	1.62 mm (0.064 in.)
AJ	23966-P21-000	1.65 mm (0.065 in.)
AK	23967-P21-000	1.68 mm (0.066 in.)
AL	23968-P21-000	1.71 mm (0.067 in.)
AM	23969-P21-000	1.74 mm (0.069 in.)
AN	23970-P21-000	1.77 mm (0.070 in.)
AO	23971-P21-000	1.80 mm (0.071 in.)
AP	23972-PPP-J00	1.83 mm (0.072 in.)
AQ	23973-PPP-J00	1.86 mm (0.073 in.)
AR	23974-PPP-J00	1.89 mm (0.074 in.)
AS	23975-PPP-J00	1.92 mm (0.076 in.)
AT	23976-PPP-J00	1.95 mm (0.077 in.)
AV	23977-PPP-J00	1.98 mm (0.078 in.)
AW	23978-PPP-J00	2.01 mm (0.079 in.)
AX	23979-PPP-J00	2.04 mm (0.080 in.)
AY	23980-PPP-J00	2.07 mm (0.081 in.)
AZ	23981-PPP-J00	2.10 mm (0.083 in.)
BA	23982-PPP-J00	2.13 mm (0.084 in.)
BB	23983-PPP-J00	2.16 mm (0.085 in.)
BC	23984-PPP-J00	2.19 mm (0.086 in.)
BD	23985-PPP-J00	2.22 mm (0.087 in.)
BE	23986-PPP-J00	2.25 mm (0.089 in.)

Transmission Reassembly

NOTE: Prior to reassembly, clean all parts in solvent, dry them, and apply MTF to any contact surfaces.

1. Install the magnet (A) and differential assembly (B).

   NOTE: Clean the magnet anytime the transmission is disassembled.

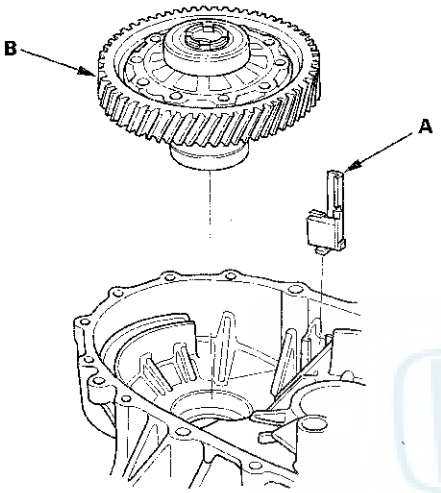

2. Install the 28 mm spring washer (A) and the 28 mm washer (B) over the ball bearing (C). Note the installation direction of the spring washer.

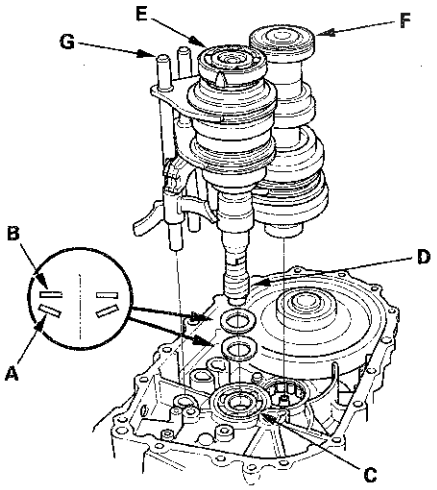

3. Apply vinyl tape to the mainshaft splines (D) to protect the seal. Install the mainshaft assembly (E) and the countershaft assembly (F) with the shift fork assembly (G), as an assembly.

4. Install the reverse shift fork (A).

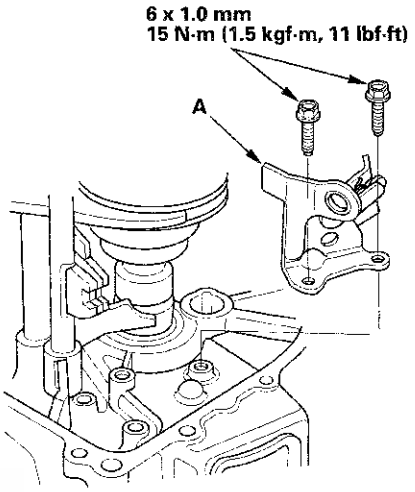

5. Install the reverse idler gear (A) and the reverse idler gear shaft (B) by aligning the mark (C) on the clutch housing with the reverse idler gear shaft hole (D).

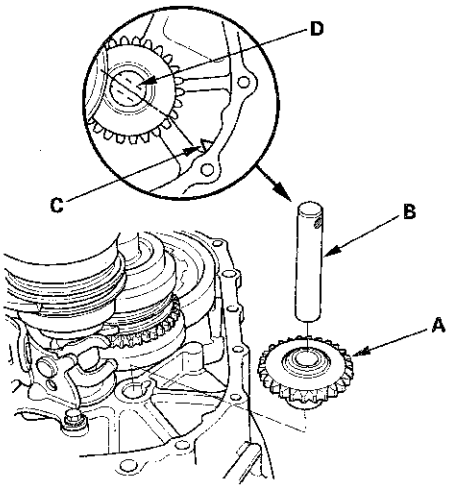

6. Install the reverse lock cam (A).

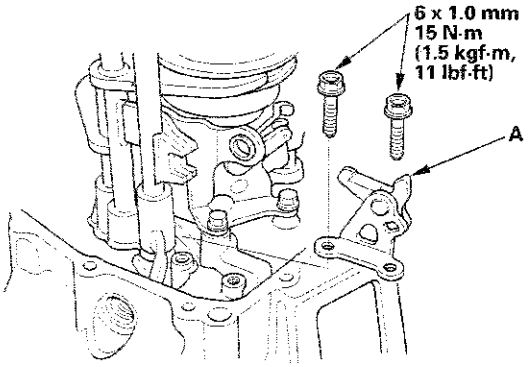

7. Install the baffle plate (A).

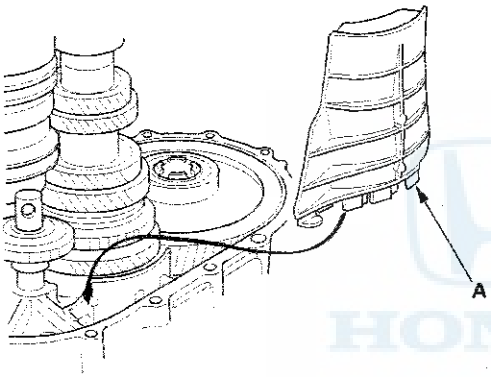

8. Select the proper size 72 mm shim (A) according to the measurements made during the Mainshaft Thrust Clearance Adjustment (see page 13-57). Install the oil gutter plate (B), oil guide plate M, and the 72 mm shim into the transmission housing (C).

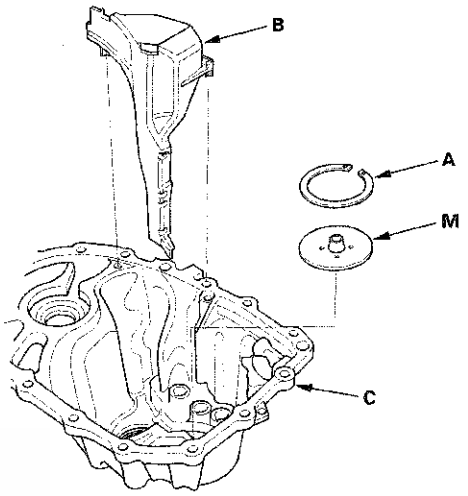

9. Clean any dirt or oil from the transmission housing sealing surface.

10. Apply liquid gasket, P/N 08717-0004, 08718-0001, 08718-0003, or 08718-0009 evenly to the clutch housing mating surface of the transmission housing. Install the component within 5 minutes of applying the liquid gasket.

NOTE:
- If apply liquid gasket P/N 08718-0012, the component must be installed within 4 minutes.
- If too much time has passed after applying the liquid gasket, remove the old liquid gasket and residue, then reapply new liquid gasket.

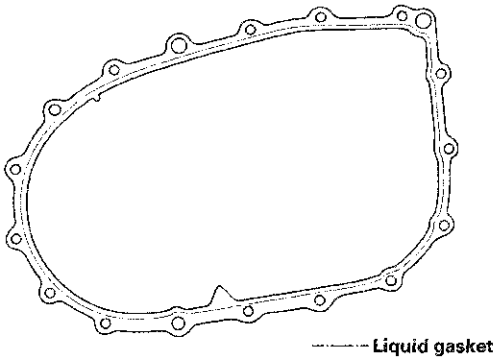

(cont'd)

Transmission Reassembly (cont'd)

11. Install the three 14 x 20 mm dowel pins (A).

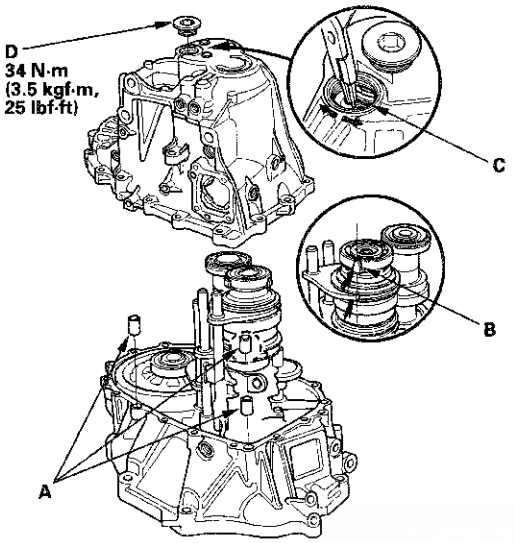

12. Set the tapered cone ring (B) as shown. Place the transmission housing on the clutch housing, making sure to line up the shafts.

13. While expanding the 72 mm snap ring (C) on the countershaft ball bearing using snap ring pliers, push the transmission housing down to start the countershaft ball bearing through the snap ring. Release the pliers, and push down the housing until it bottoms and the snap ring snaps in place in the countershaft ball bearing snap ring groove.

    NOTE: Install the 32 mm sealing cap (D) after setting in the 72 mm snap ring.

14. Make sure the 72 mm snap ring (A) is securely seated in the groove of the countershaft bearing.

    Dimension ① as installed: 3.3—6.0 mm (0.13—0.24 in.)

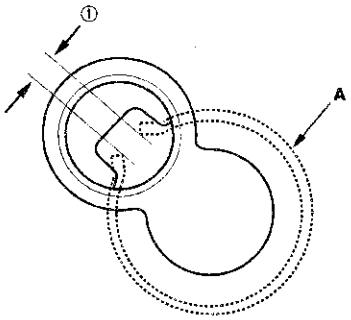

15. Apply liquid gasket (P/N 08717-0004, 08718-0001, 08718-0012, 08718-0003, or 08718-0009) to the threads of the 32 mm sealing cap, and install it on the transmission housing.

16. Install the 8 mm flange bolts finger-tight with transmission hanger A and transmission hanger B.

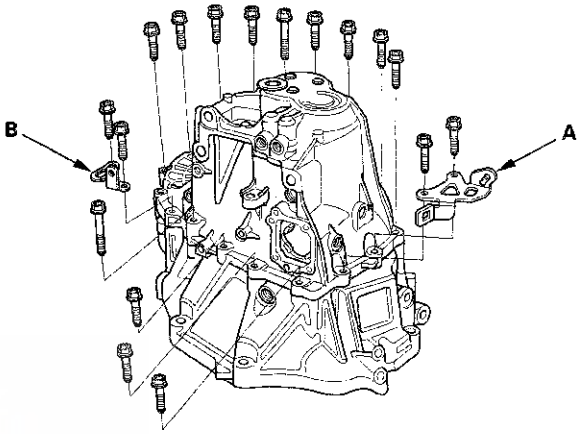

17. Tighten the 8 mm flange bolts in a crisscross pattern in several steps.

    Specified Torque: 8 x 1.25 mm
    27 N·m (2.8 kgf·m, 20 lbf·ft)

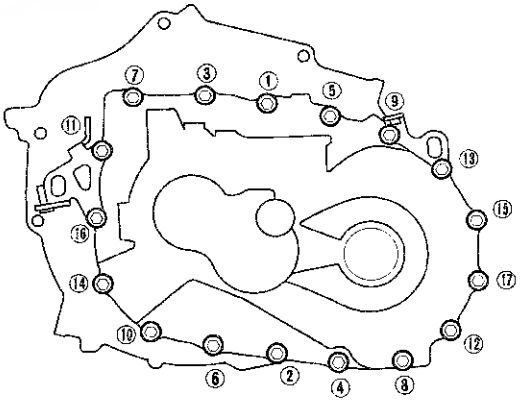

18. Clean any dirt or oil from the change lever assembly sealing surface.

19. Apply liquid gasket, P/N 08717-0004, 08718-0001, 08718-0003, or 08718-0009 evenly to the transmission housing mating surface of the change lever assembly. Install the component within 5 minutes of applying the liquid gasket.

    NOTE:
    - If apply liquid gasket P/N 08718-0012, the component must be installed within 4 minutes.
    - If too much time has passed after applying the liquid gasket, remove the old liquid gasket and residue, then reapply new liquid gasket.

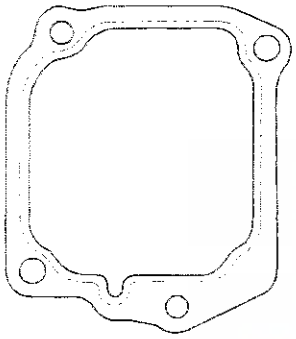

20. Install the 8 x 14 mm dowel pins (A) and the change lever assembly (B).

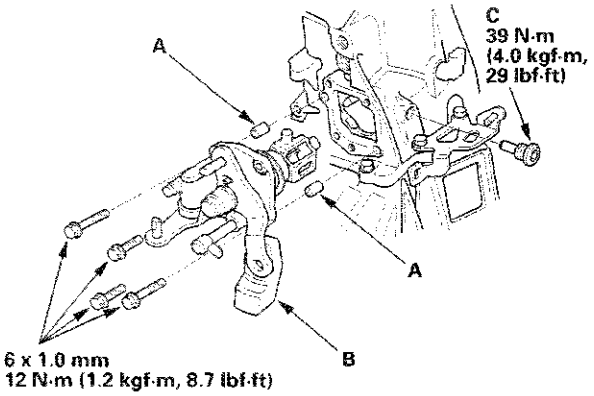

21. Apply liquid gasket (P/N 08717-0004, 08718-0001, 08718-0012, 08718-0003, or 08718-0009) to the threads of the interlock bolt (C), and install it on the transmission housing.

22. Install the filler plug (A) with a new washer finger-tight, and install the drain plug (B) and the 10 mm flange bolt (C) with new sealing washers (D).

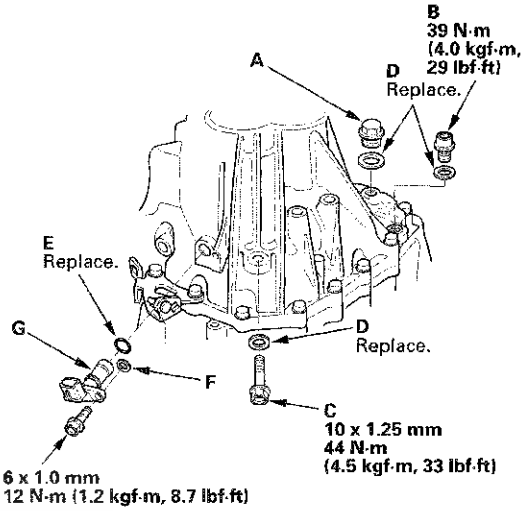

23. Apply the MTF to the new O-ring (E), and install the new O-ring, the plain washer (F), and the output shaft (countershaft) speed sensor (G).

24. Install the steel balls (A), the springs (B), the detent bolts (D) with new 12 mm sealing washers (E).

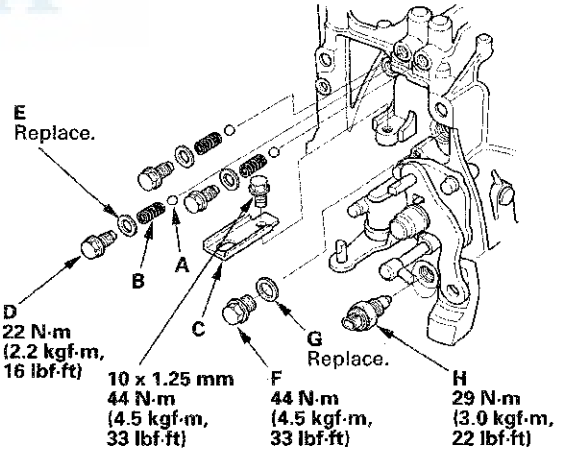

25. Install the 20 mm bolt (F) with the new 20 mm sealing washer (G), and transmission hanger C.

26. Apply liquid gasket (P/N 08717-0004, 08718-0001, 08718-0012, 08718-0003, or 08718-0009) to the threads of the back-up light switch (H), and install it in the transmission housing.

Gearshift Mechanism Replacement

NOTE: Make sure not to get any silicone grease on the terminal part of the connectors and switches, especially if you have silicone grease on your hands or gloves.

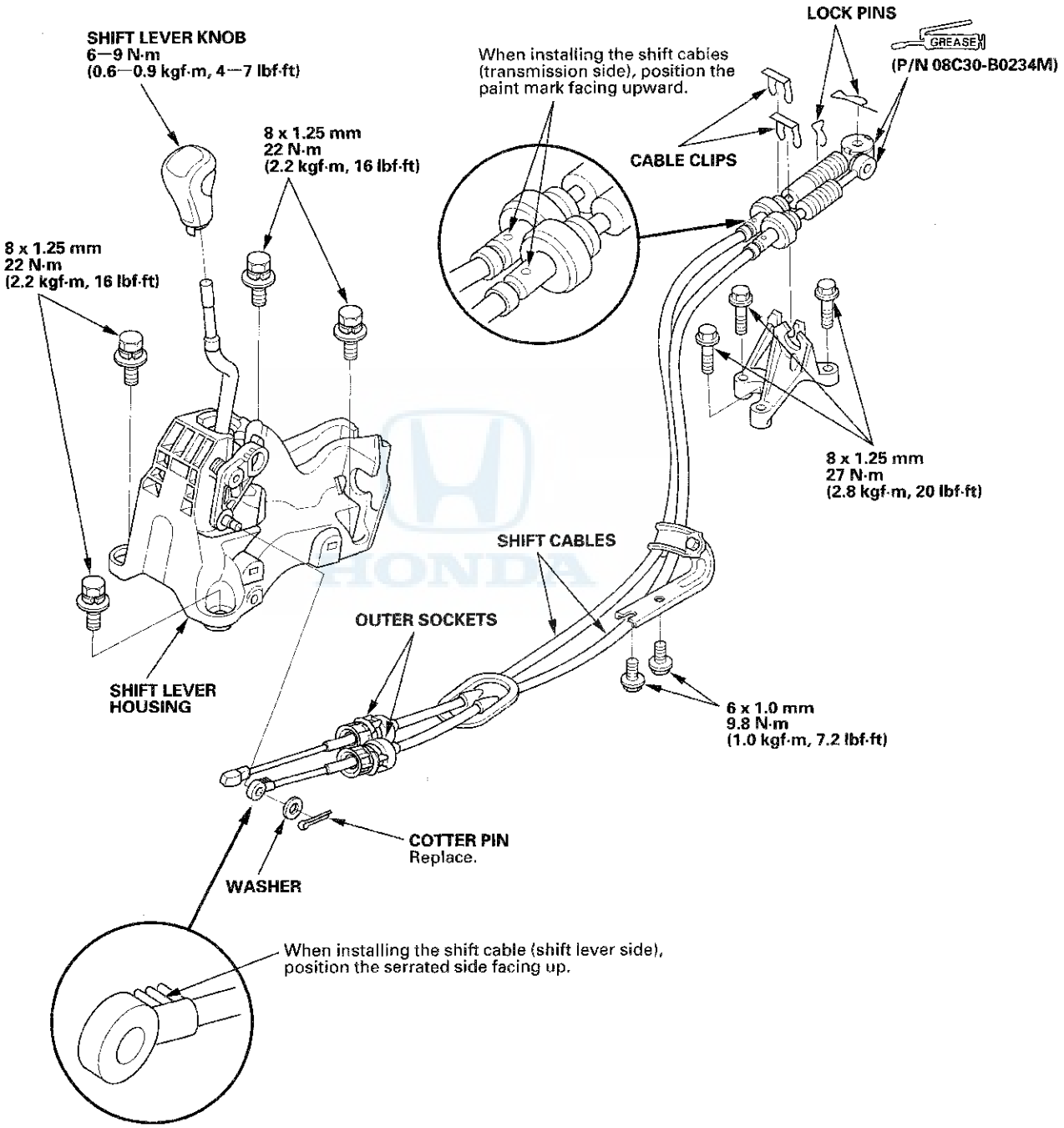

Shift Lever Housing Replacement

Special Tools Required
KTC trim tool set SOJATP2014 *
* : Available through the Honda Tool and Equipment Program; call 888-424-6857

NOTE:
- Use the appropriate tool from the KTC trim tool set to avoid damage when removing components.
- Take care not to scratch the center console, dashboard, and related parts.

1. Remove the center console panel (see page 20-146).

2. Remove the harness clamps.

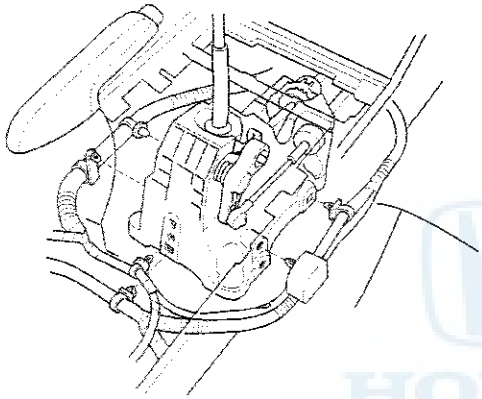

3. Remove the cotter pin (A), the washer (B), and the bolts.

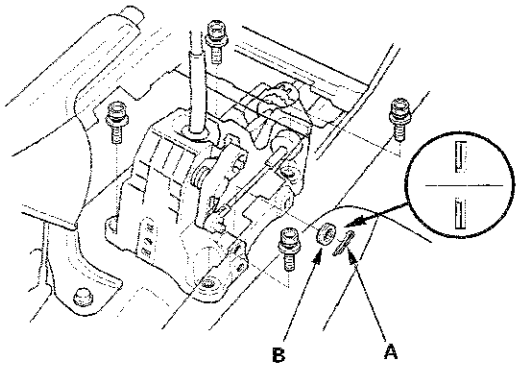

4. Unlock the retainer (A).

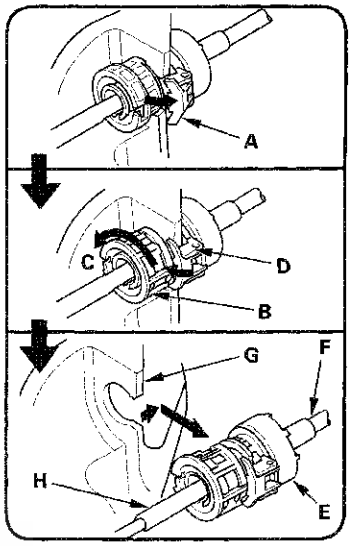

5. Rotate the socket holder retainer (B) counterclockwise (C) until it stops, and push the retainer lock (D) into the socket holder retainer to lock the retainer.

6. Slide the socket holder (E), and the shift cable (F) out of the shift cable bracket (G). Do not remove the shift cable by pulling the shift cable guide (H).

7. Remove the shift lever assembly (A) from the shift cable (B) and the select cable (C).

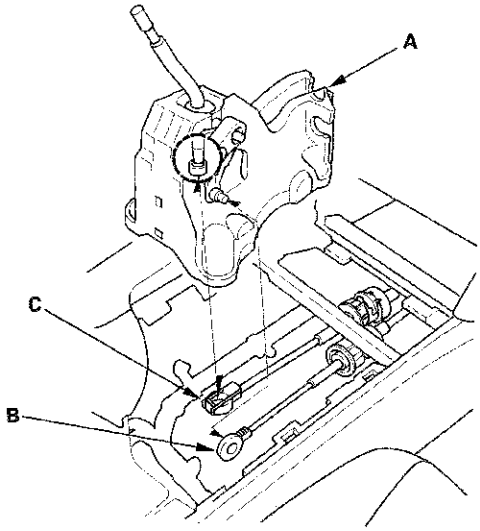

(cont'd)

Shift Lever Housing Replacement (cont'd)

8. Align the socket holder (A) on the shift cables (B) with the slot in the bracket base (C), then slide the holder into the base. Install the shift cable ends (D) to the shift lever assembly (E) then install the shift lever assembly.

   NOTE: When installing the shift cable (shift lever side), position the serrated side (F) facing up.

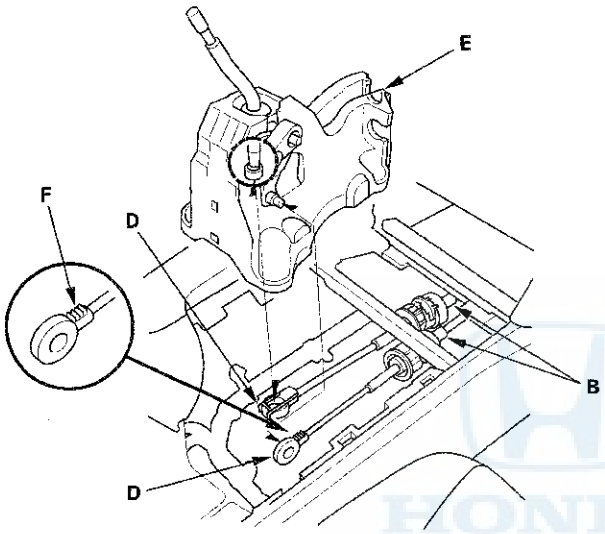

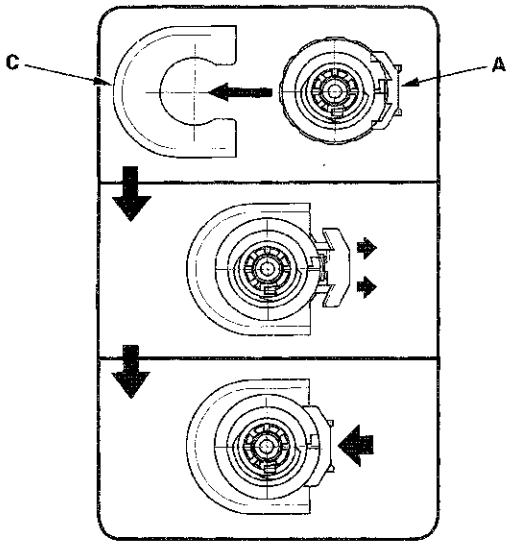

9. Install the bolts, the washer (A), and the cotter pin (B), then bend the cotter pin ends.

   NOTE: You can install the cotter pin from either direction.

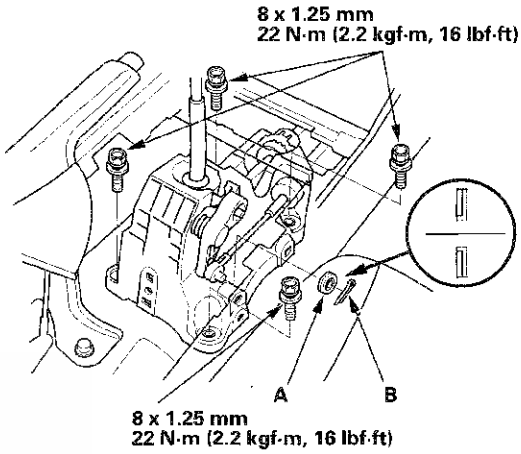

10. Install the harness clamps.

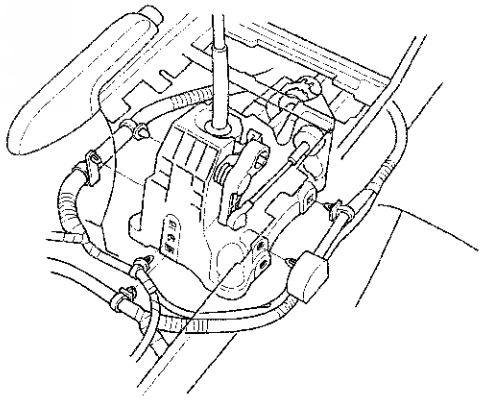

11. Install the center console panel (see page 20-146).

Component Location Index

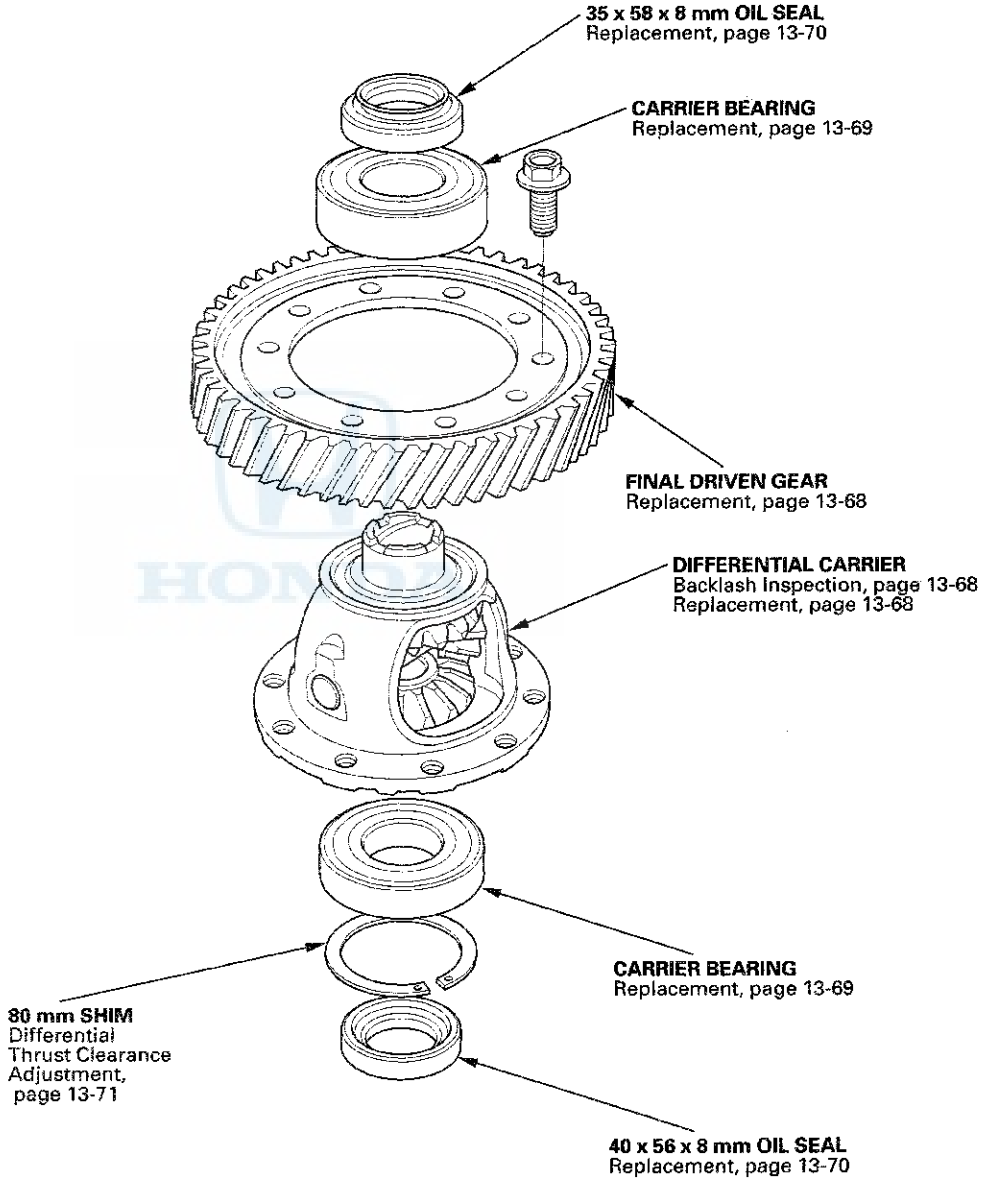

Backlash Inspection

1. Place the differential assembly on V-blocks (A), and install the intermediate shaft (B) and the left driveshaft (C).

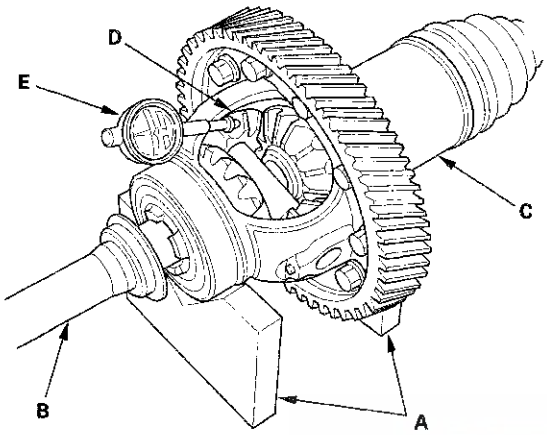

2. Measure the backlash of both pinion gears (D) with a dial indicator (E). If the backlash is not within the standard, check the differential carrier condition, and replace it if necessary.

Standard (New): 0.028—0.103 mm (0.0011—0.0041 in.)

Differential Carrier, Final Driven Gear Replacement

1. Loosen the bolts in a crisscross pattern in several steps, then remove the bolts and the final driven gear (A) from the differential carrier (B).

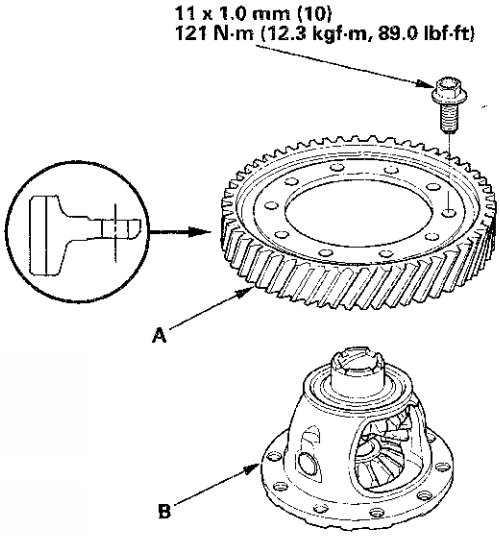

2. Install the final driven gear with the chamfer on the inside diameter facing the carrier. Tighten the bolts in a crisscross pattern in several steps.

Carrier Bearing Replacement

Special Tools Required
Inner driver handle, 40 mm 07746-0030100

1. Check the carrier bearings for wear and rough rotation. If they rotate smoothly and their rollers show no signs of wear, the bearings are OK.

2. Remove the carrier bearings (A) with a commercially available bearing puller (B).

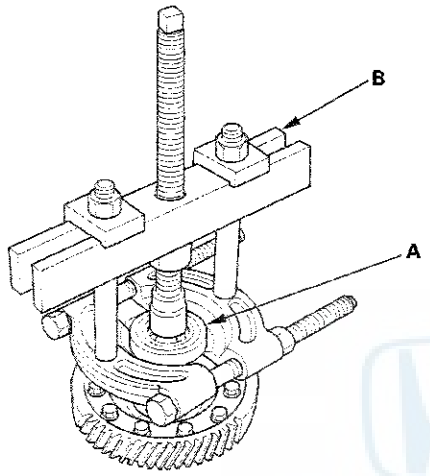

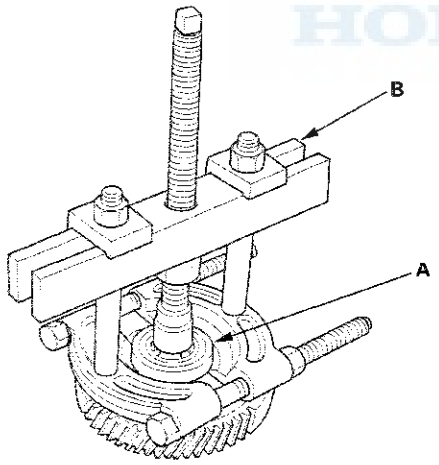

3. Install the new bearings (A) with the 40 mm inner driver handle (B) and a press (C). Press on each bearing until it bottoms. There should be no clearance between the bearings and the differential carrier.

   NOTE: Place the seal (D) part of the bearing towards the outside of the differential, then install it.

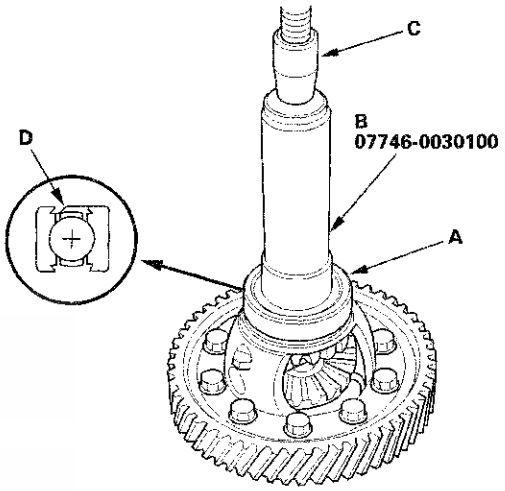

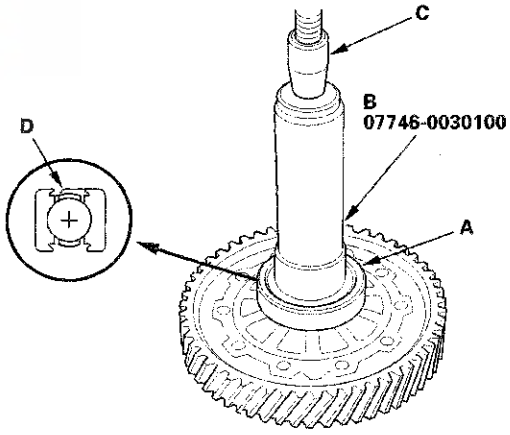

HONDA

Oil Seal Replacement

Special Tools Required
- Driver handle, 15 x 135L 07749-0010000
- Oil seal driver attachment 07NAD-P20A100

1. Remove the oil seal (A) from the transmission housing (B).

   NOTE: Be careful not to damage the transmission housing while removing the oil seals.

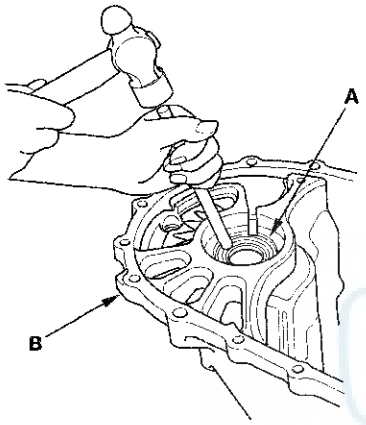

2. Remove the oil seal (A) from the clutch housing (B).

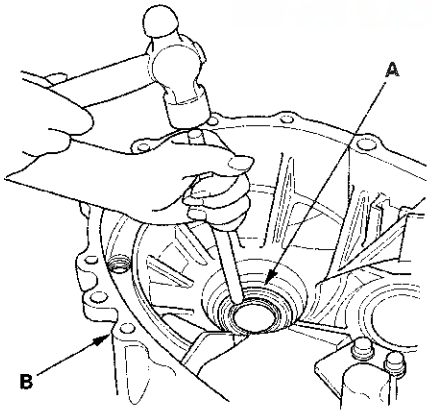

3. Install the new oil seal in the transmission housing with the 15 x 135L driver handle (A) and the oil seal driver attachment (B).

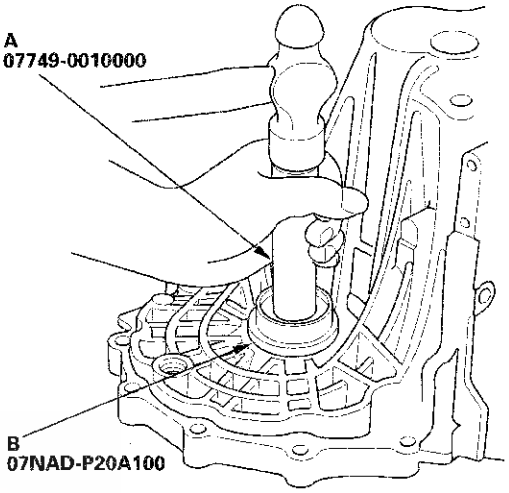

4. Install the new oil seal in the clutch housing with the 15 x 135L driver handle (A) and the oil seal driver attachment (B).

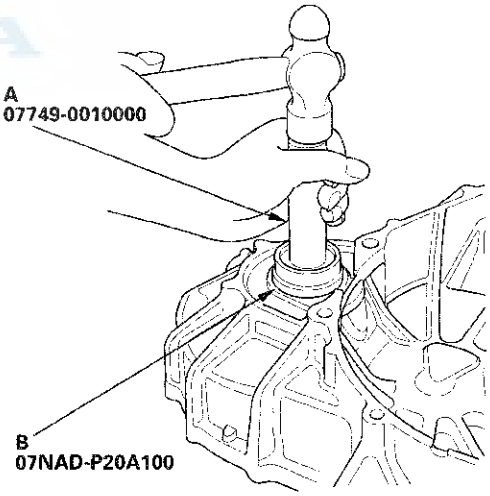

Differential Thrust Clearance Adjustment

Special Tools Required
Inner driver handle, 40 mm 07746-0030100

1. Remove the left driveshaft side oil seal from the transmission housing (see page 13-70).

2. If you removed the 80 mm shim from the transmission housing, reinstall the same sized shim.

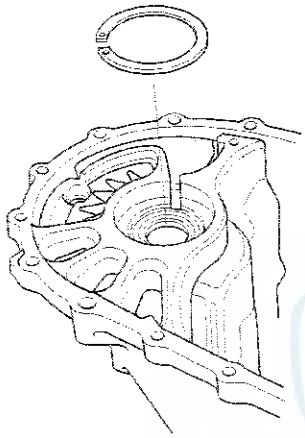

3. Install the differential assembly into the clutch housing.

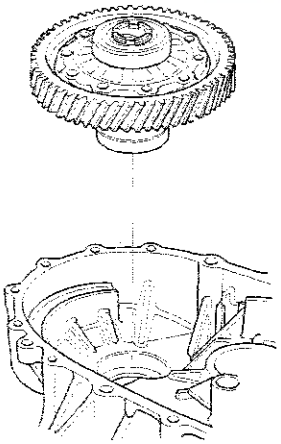

4. Install the transmission housing onto the clutch housing, then tighten the 8 mm flange bolts in a crisscross pattern in several steps (see step 17 on page 13-62).

   Specified Torque: 8 x 1.25 mm
   27 N·m (2.8 kgf·m, 20 lbf·ft)

5. Use the 40 mm inner driver handle to bottom the differential assembly in the clutch housing.

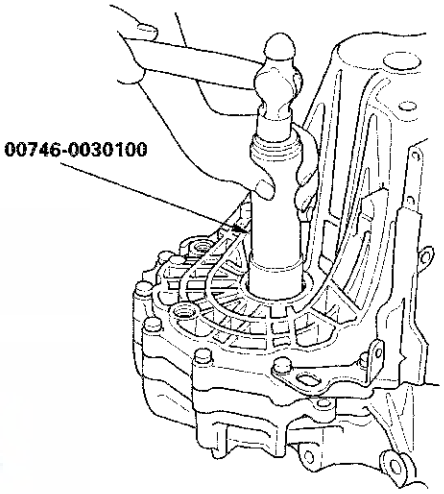

6. Measure clearance between 80 mm shim and the bearing outer race in the transmission housing.

   Standard: 0—0.10 mm (0—0.0039 in.)

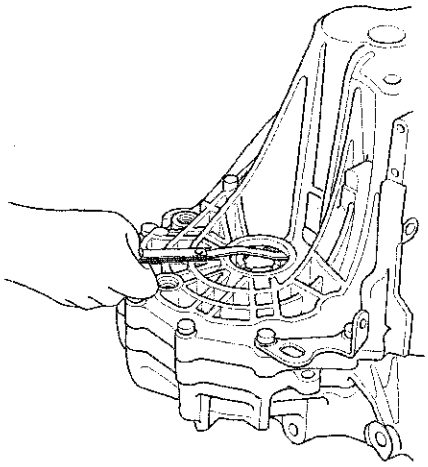

(cont'd)

Differential Thrust Clearance Adjustment (cont'd)

7. If the clearance exceeds the standard, select a new 80 mm shim from the following table. If the clearance measured in step 6 is within the standard, go to step 10.

80 mm Shim

Type	Part Number	Thickness
A	41441-PL3-B00	1.00 mm (0.039 in.)
B	41442-PL3-B00	1.10 mm (0.043 in.)
C	41443-PL3-B00	1.20 mm (0.047 in.)
D	41444-PL3-B00	1.30 mm (0.051 in.)
E	41445-PL3-B00	1.40 mm (0.055 in.)
F	41446-PL3-B00	1.50 mm (0.059 in.)
G	41447-PL3-B00	1.60 mm (0.063 in.)
H	41448-PL3-B00	1.70 mm (0.067 in.)
J	41449-PL3-B00	1.80 mm (0.071 in.)
K	41450-PL3-B00	1.05 mm (0.041 in.)
L	41451-PL3-B00	1.15 mm (0.045 in.)
M	41452-PL3-B00	1.25 mm (0.049 in.)
N	41453-PL3-B00	1.35 mm (0.053 in.)
P	41454-PL3-B00	1.45 mm (0.057 in.)
Q	41455-PL3-B00	1.55 mm (0.061 in.)
R	41456-PL3-B00	1.65 mm (0.065 in.)
S	41457-PL3-B00	1.75 mm (0.069 in.)

8. Remove the bolts and transmission housing.

9. Replace the thrust shim selected in step 7, then recheck the clearance.

10. Install the new left driveshaft side oil seal to the transmission housing (see page 13-70).

11. Reinstall the transmission housing.

SUPPLEMENTAL RESTRAINT SYSTEM (SRS) (If automatic transmission maintenance is required)

The Accord SRS includes a driver's airbag in the steering wheel hub, a passenger's airbag in the dashboard above the glove box, seat belt tensioners in the front seat belt retractors, side curtain airbags in the sides of the roof, and side airbags in the front seat-backs. Information necessary to safely service the SRS is included in this Service Manual. Items marked with an asterisk (*) on the contents page include or are located near SRS components. Servicing, disassembling, or replacing these items requires special precautions and tools, and should be done by an authorized Honda dealer.

- To avoid rendering the SRS inoperative, which could lead to personal injury or death in the event of a severe frontal or side collision, all SRS service work should be done by an authorized Honda dealer.
- Improper service procedures, including incorrect removal and installation of the SRS, could lead to personal injury caused by unintentional deployment of the airbags, side airbags, and/or side curtain airbags.
- Do not bump or impact the SRS unit, front impact sensors, side impact sensors, or rear safing sensor when the ignition switch is in ON (II), or for at least 3 minutes after the ignition switch is turned to LOCK (0); otherwise, the system may fail in a collision, or the airbags may deploy.
- SRS electrical connectors are identified by yellow color coding. Related components are located in the steering column, front console, dashboard, dashboard lower panel, in the dashboard above the glove box, in the front seats, in the roof side, and around the floor. Do not use electrical test equipment on these circuits.

Navigation Tools: Click on the "Table of Contents" below, or use the Bookmarks to the left.

Automatic Transmission

Automatic Transmission

Special Tools 14-2
General Troubleshooting Information 14-4
DTC Troubleshooting Index 14-10
Symptom Troubleshooting Index 14-14
Component Location Index 14-25
System Description 14-26
DTC Troubleshooting 14-79
Road Test 14-206
Stall Speed Test 14-208
Pressure Test 14-209
Shift Solenoid Valve Test 14-212
Shift Solenoid Valve and Shift Solenoid Wire Harness Replacement 14-216
A/T Clutch Pressure Control Solenoid Valve
- Solenoid Valve A Test 14-218
- Solenoid Valve A Replacement 14-220
- Solenoid Valve B Test 14-221
- Solenoid Valve B Replacement 14-225
- Solenoid Valve C Test 14-223
- Solenoid Valve C Replacement 14-225

Input Shaft (Mainshaft) Speed Sensor Replacement 14-226
Output Shaft (Countershaft) Speed Sensor Replacement 14-226
2nd Clutch Transmission Fluid Pressure Switch Replacement 14-227
3rd Clutch Transmission Fluid Pressure Switch Replacement 14-227
ATF Temperature Sensor Test/Replacement 14-228
ATF Level Check 14-230
ATF Replacement 14-231
Transmission Removal 14-232
Transmission Installation 14-243
Drive Plate Removal and Installation 14-257
ATF Cooler Cleaning 14-258
ATF Cooler Hose Replacement 14-260
ATF Filter Replacement 14-261
Shift Lever Removal 14-262
Shift Lever Installation 14-264
Shift Lever Disassembly/Reassembly 14-267
Shift Cable Replacement 14-269
Shift Cable Adjustment 14-272

A/T Gear Position Indicator

Component Location Index 14-276
Circuit Diagram 14-277
Transmission Range Switch Test 14-278
Transmission Range Switch Replacement 14-280
A/T Gear Position Indicator Panel Light Harness Replacement 14-282

A/T Interlock System

Component Location Index 14-287
Circuit Diagram 14-288
Shift Lock System Circuit Troubleshooting 14-289
* Key Interlock System Circuit Troubleshooting 14-294
* Key Interlock Solenoid Test 14-295
Shift Lock Solenoid Test 14-296
Shift Lock Solenoid Replacement 14-297
Shift Lock Stop, Shift Lock Stop Cushion Replacement 14-299
Shift Lock Release, Release Spring, and Release Shaft Replacement 14-300
Park Pin Switch Test 14-301
Park Pin Switch Replacement 14-302

Transmission End Cover

End Cover Removal 14-307
Park Lever Stop Inspection and Adjustment 14-309
Idler Gear Shaft Bearing Replacement 14-309
Selector Control Shaft Oil Seal Replacement 14-310
Selector Control Shaft Bearing Replacement 14-310
ATF Feed Pipe Replacement 14-311
End Cover Installation 14-367

Transmission Housing

Housing and Shaft Assembly Removal 14-312
Bearing Removal 14-315
Bearing Installation 14-316
Reverse Idler Gear Removal and Installation 14-317
Shaft Assembly and Housing Installation 14-362

Valve Body

Valve Body and ATF Strainer Removal 14-318
Valve Body Repair 14-320
Valve Body Valve Installation 14-321
Main Valve Body Disassembly, Inspection, and Reassembly 14-322
ATF Pump Inspection 14-323
Regulator Valve Body Disassembly, Inspection, and Reassembly 14-324
Servo Body Disassembly, Inspection, and Reassembly 14-325
Shift Solenoid Valve Removal and Installation 14-326
Valve Body and ATF Strainer Installation 14-360

Navigation Tools: Click on the “Table of Contents” below, or use the Bookmarks to the left.

Torque Converter Housing

Mainshaft Bearing and Oil Seal Replacement 14-327
Countershaft Bearing Replacement 14-328
Secondary Shaft Bearing Replacement ... 14-329
Selector Control Shaft Oil Seal Replacement 14-330

Shafts and Clutches

Mainshaft Disassembly, Inspection, and Reassembly 14-331
Mainshaft 5th Gear Axial Clearance Inspection 14-332
Countershaft Disassembly, Inspection, and Reassembly 14-334
Countershaft Reverse Selector Hub and 3rd Gear Removal 14-335
Countershaft 3rd Gear and Reverse Selector Hub Installation 14-336
Secondary Shaft Disassembly, Inspection, and Reassembly 14-337
Secondary Shaft Idler Gear Removal and Installation 14-338
Secondary Shaft 2nd Gear Axial Clearance Inspection 14-339
Secondary Shaft 1st Gear Axial Clearance Inspection 14-340
Idler Gear Shaft Removal and Installation 14-342
Idler Gear/Idler Gear Shaft Replacement 14-343
Clutch Disassembly 14-344
Clutch Inspection 14-348
Clutch Wave-plate Phase Difference Inspection 14-349
Clutch Clearance Inspection 14-350
1st, 2nd, and 3rd Clutch Reassembly 14-353
4th and 5th Clutch Reassembly 14-357

A/T Differential

Component Location Index 14-374
Backlash Inspection 14-374
Carrier Bearing Replacement 14-375
Differential Carrier and Final Driven Gear Replacement 14-375
Oil Seal Replacement 14-376
Carrier Bearing Outer Race Replacement 14-377
Carrier Bearing Preload Inspection 14-378

Special Tools

Ref. No.	Tool Number	Description	Qty
①	07GAB-PF50101	Mainshaft Holder	1
②	07HAC-PK40102	Housing Puller	1
③	07HAJ-PK40201	Preload Inspection Tool	1
④	07JAD-PH80101	Oil Seal Driver Attachment	1
⑤	07LAD-PW50601	Attachment, 40 mm	1
⑥	07LAE-PX40000	Clutch Spring Compressor Set	1
⑦	07MAJ-PY4011A	A/T Pressure Hose, 2,210 mm	3
⑧	07MAJ-PY40120	A/T Pressure Hose Adapter	3
⑨	07NAD-PX40100	Attachment, 78 x 80 mm	1
⑩	07QAD-P0A0100	Attachment, 42 mm I.D.	1
⑪	07ZAE-PRP0100	Clutch Compressor Attachment	1
⑫	070AG-SJAA10S	Subframe Alignment Pin	1

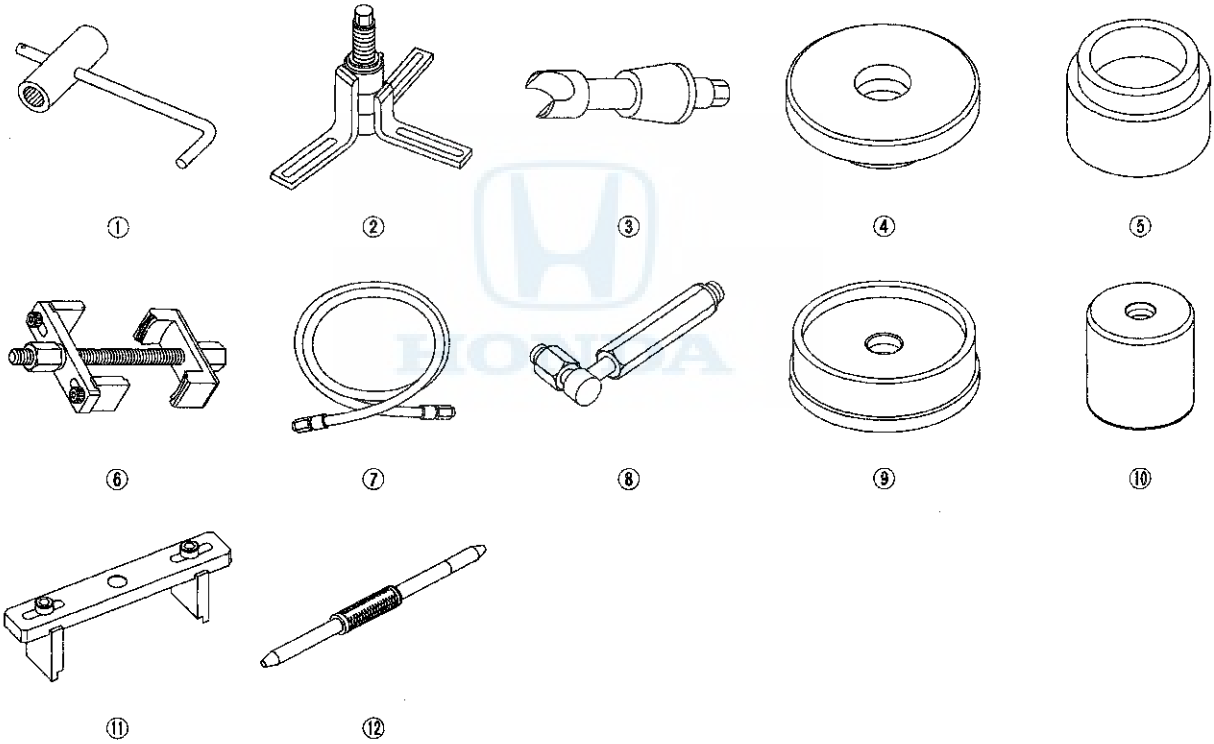

Ref. No.	Tool Number	Description	Qty
⑬	07406-0020400 or 07406-0020401	A/T Oil Pressure Gauge Set	1
⑭	07736-A01000B or 07736-A01000A	Adjustable Bearing Puller, 25—40 mm	1
⑮	07746-0010100	Attachment, 32 x 35 mm	1
⑯	07746-0010300	Attachment, 42 x 47 mm	1
⑰	07746-0010400	Attachment, 52 x 55 mm	1
⑱	07746-0010500	Attachment, 62 x 68 mm	1
⑲	07746-0010600	Attachment, 72 x 75 mm	1
⑳	07746-001A800	Attachment, 22 x 24 mm	1
㉑	07746-0030100	Driver Handle, 40 mm I.D.	1
㉒	07749-0010000	Driver	1
㉓	07947-SD90101	Oil Seal Driver Attachment	1
㉔	07947-ZV00100	Oil Seal Driver Attachment	1

⑭: Must be used with commercially available 3/8 "-16 slide hammer.

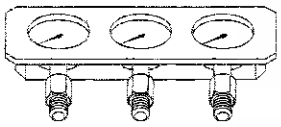

⑬

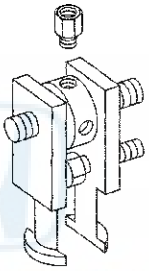

⑭

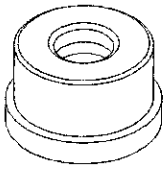

⑮⑯⑰⑱⑲⑳

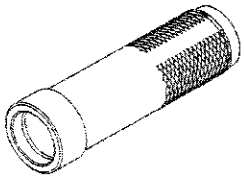

㉑

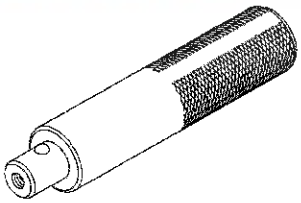

㉒

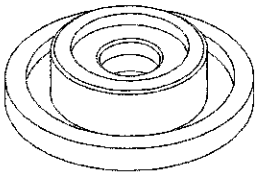

㉓

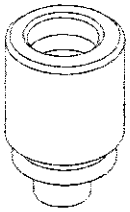

㉔

General Troubleshooting Information

How to Check for DTCs with the Honda Diagnostic System (HDS)

When the powertrain control module (PCM) senses an abnormality in the input or output system, the D indicator (A) in the gauge control module (B) will usually blink.

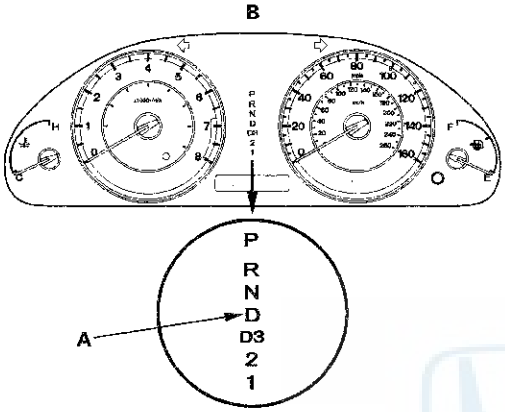

When the Honda Diagnostic System (HDS) is connected to the data link connector (DLC) (A) located under the driver's side of the dashboard, it will indicate the diagnostic trouble code (DTC) when the ignition switch is turned to ON (II) and the appropriate menu is selected.

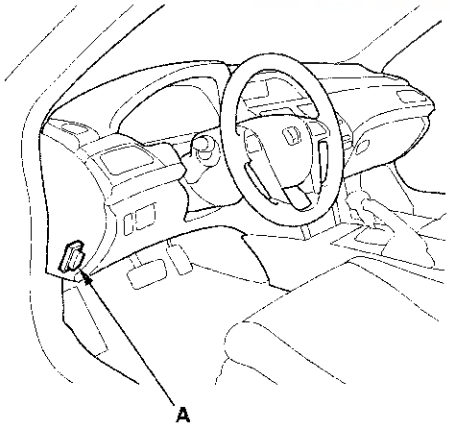

If the D indicator or the malfunction indicator lamp (MIL) has been reported on, or if a driveability problem is suspected, follow this procedure:

1. Connect the HDS to the DLC. (See the HDS user's manual for specific instructions.)
2. Turn the ignition switch to ON (II). Make sure the HDS communicates with the PCM. If it does not, go to the DLC circuit troubleshooting (see page 11-192).
3. Select A/T system, and observe the DTC in the DTCs MENU on the HDS screen.
4. Record the freeze data and the on-board snapshots for all fuel and emissions DTCs and A/T DTCs.
5. If there is a fuel and emissions DTC, first check the fuel and emissions system as indicated by the DTC.
6. Clear the DTC and the data.
7. Drive the vehicle for several minutes under the same conditions as those indicated by the freeze data, and then recheck for a DTC. If the A/T DTC returns, go to the indicated DTC's troubleshooting. If the DTC does not return, there was an intermittent problem within the circuit. Make sure all pins and terminals in the circuit are tight.

Symptom Troubleshooting Versus DTC Troubleshooting

Some symptoms will not trigger DTCs or cause the D indicator to blink. If the MIL was reported ON or the D indicator has been blinking, check for DTCs. If the vehicle has an abnormal symptom, and there are no DTCs stored, do the symptom troubleshooting. Check the list of probable cause(s) for the symptom, in the sequence listed, until you find the problem.

How to Check for DTCs with the SCS Mode (retrieving the flash codes)

NOTE: The preferred method is to use the HDS to retrieve the DTCs.

When the PCM senses an abnormality in the input or output system, the D indicator (A) in the gauge control module (B) will usually blink.

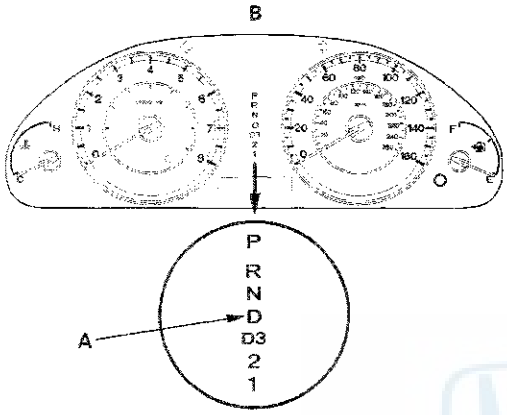

When the D indicator has been reported on, connect the HDS to the DLC (A) located under the driver's side of the dashboard. Turn the ignition switch to ON (II), select SCS mode, then the D indicator will indicate (flash) the DTC.

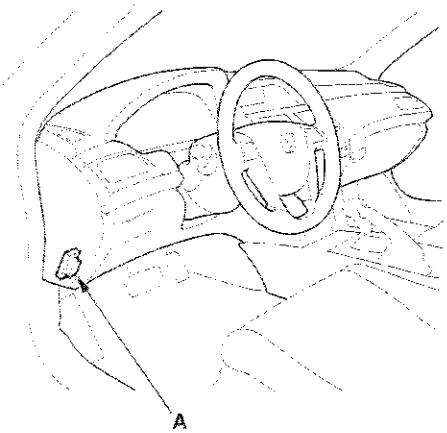

If the D indicator and the MIL come on at the same time, or if a drivability problem is suspected, follow this procedure:

1. Connect the HDS to the DLC. (See the HDS user's manual for specific instructions.)

2. Turn the ignition switch to ON (II). Make sure the HDS communicates with the PCM. If it does not, go to the DLC circuit troubleshooting (see page 11-192).

3. Select SCS mode, then observe the D indicator in the gauge control module. Codes 1 through 9 are indicated by individual short blinks. Code 10 and above are indicated by a series of long and short blinks. One long blink equals 10 short blinks. Add the long and short blinks together to determine the code.

Example: DTC P0705 (5)

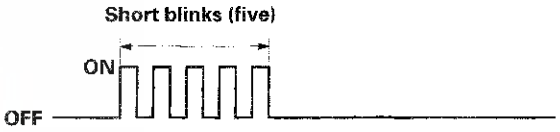

Example: DTC P0717 (15)

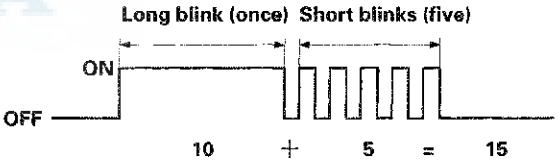

4. Record all fuel and emissions DTCs and A/T DTCs.

5. If there is a fuel and emissions DTC, first check the fuel and emissions system as indicated by the DTC.

6. Clear the DTC and the data.

7. Drive the vehicle for several minutes under the same conditions as those indicated by the freeze data, and then recheck for DTCs. If the A/T DTC returns, go to the indicated DTC's troubleshooting. If the DTC does not return, there was an intermittent problem within the circuit. Make sure all pins and terminals in the circuit are tight.

(cont'd)

General Troubleshooting Information (cont'd)

How to Troubleshoot Circuits at the PCM Connectors

NOTE: The PCM overwrites data and monitors the EVAP system for about 40 minutes after the ignition switch is turned to LOCK (0). Jumping the SCS line after turning the ignition switch to LOCK (0) cancels this function. Disconnecting the PCM during this function, without jumping the SCS line first, can damage the PCM.

1. Jump the SCS line with the HDS.

2. Remove the bolts (D).

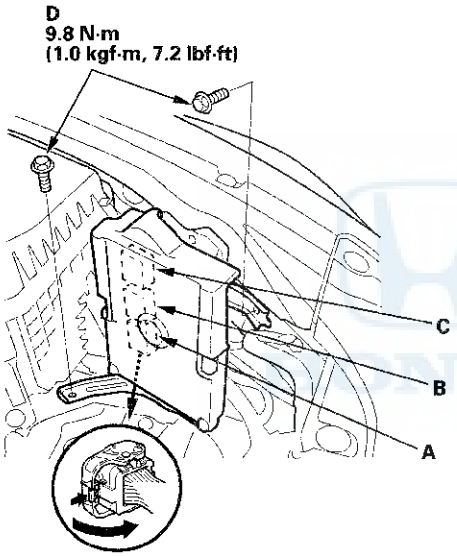

3. Disconnect PCM connectors A, B, and C.

   NOTE: PCM connectors A, B, and C have symbols (A=□, B=△, C=○) embossed on them for identification.

4. When diagnosis/troubleshooting is done at the PCM connector, use the terminal test port (A) above the terminal you need to check.

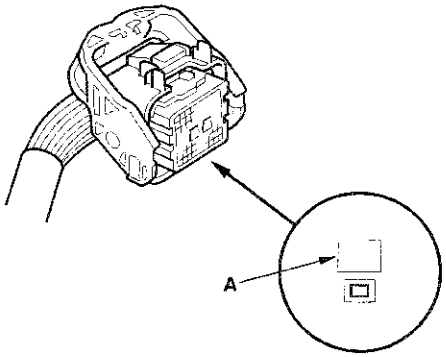

5. Connect one side of the patch cords (A) terminals to a commercially available digital multimeter (B), and connect the other side of the patch cord terminals to a commercially available banana jack (Pomona Electronics Tool No. 3563 or equivalent) (C).

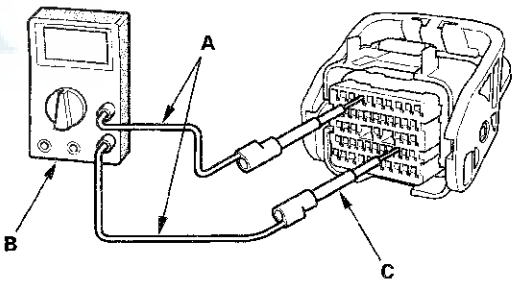

6. Gently insert the pin probe (male) into the terminal test port from the terminal side. Do not force the tips into the terminals.

NOTICE

- For accurate results, always use the pin probe (male).
- To prevent damage to the connector terminals, do not insert test equipment probes, paper clips, or other substitutes as they can damage the terminals. Damaged terminals cause a poor connection and an incorrect measurement.
- Do not puncture the insulation on a wire. Punctures can cause poor or intermittent electrical connections.

Clear A/T DTCs Procedure

1. Connect the HDS to the DLC (A) located under the driver's side of the dashboard.

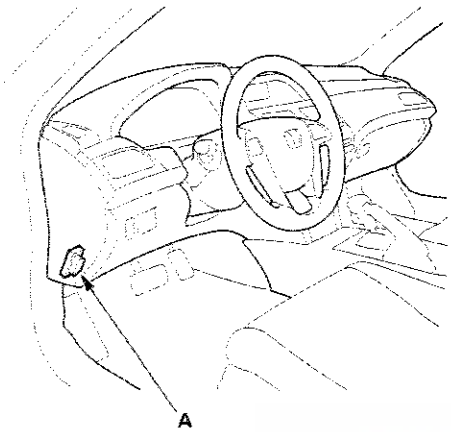

2. Turn the ignition switch to ON (II).
3. Make sure the HDS communicates with the PCM. If it does not, go to the DLC circuit troubleshooting (see page 11-192).
4. Clear the DTC(s) on the HDS screen.

OBD Status

The OBD status shows the current system status of each DTC and all of the parameters. This function is used to see if the technician's repair was successfully completed. The results of diagnostic tests for the DTC are displayed as:

- PASSED: The on-board diagnosis has successfully completed.
- FAILED: The on-board diagnosis has finished but failed.
- NOT COMPLETED: The on-board diagnosis was running but is out of the enable conditions of the DTC.

How to End a Troubleshooting Session (required after any troubleshooting)

NOTE: Reset the PCM with the HDS while the engine is stopped.

1. Turn the ignition switch to LOCK (0).
2. Turn the ignition switch to ON (II), and wait for 30 seconds.
3. Turn the ignition switch to LOCK (0), and disconnect the HDS from the DLC.
4. Do the PCM idle learn procedure (see page 11-317).
5. Start the engine with the shift lever in P or N, and warm it up to normal operating temperature (the radiator fan comes on).
6. To verify that the problem is repaired, test-drive the vehicle for several minutes at speeds over 31 mph (50 km/h) or under the same conditions as those indicated by the freeze data.

(cont'd)

General Troubleshooting Information (cont'd)

Substituting the PCM

Special Tools Required
- Honda diagnostic system (HDS) tablet tester
- Honda interface module (HIM) and an iN workstation with HDS and CM update software
- HDS pocket tester
- GNA600 and an iN workstation with HDS and CM update software

Use any one of these update tools.

NOTE: Use this procedure when you have to substitute a known-good PCM during a troubleshooting procedure.

1. Connect the HDS to the data link connector (DLC) (A) located under the driver's side of the dashboard.

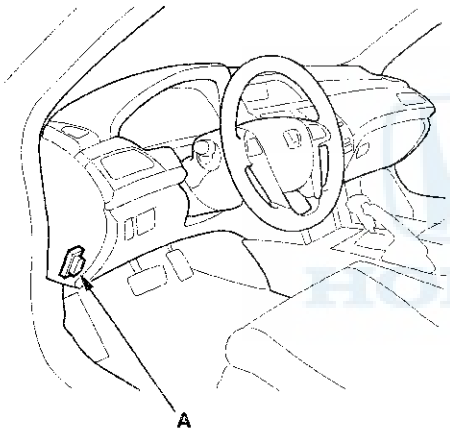

2. Turn the ignition switch to ON (II).

3. Make sure the HDS communicates with the PCM. If it does not, go to the DLC circuit troubleshooting (see page 11-192). If you are returning from DLC circuit troubleshooting, skip steps 5 and 6, and then clean the throttle body after substituting the PCM (see page 11-359).

4. Select the INSPECTION MENU with the HDS.

5. Select the ETCS TEST, then select the TP POSITION CHECK, and follow the screen prompts.

   NOTE: If the TP POSITION CHECK indicates FAILED, continue this procedure.

6. Turn the ignition switch to LOCK (0).

7. Do the battery removal procedure (see page 22-90).

8. Remove the bolts (D).

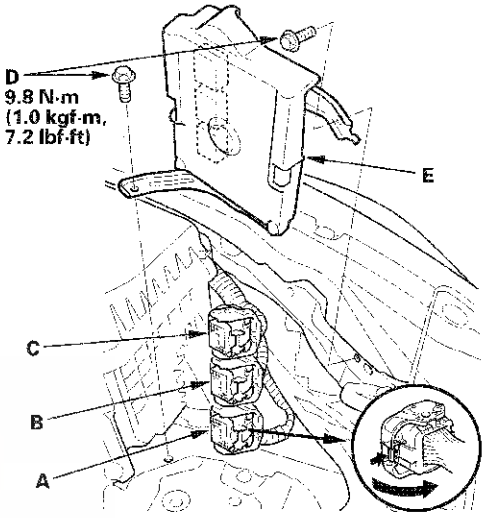

9. Disconnect PCM connectors A, B, and C, then remove the PCM assembly (E).

   NOTE: PCM connectors A, B, and C have symbols (A=□, B=△, C=○) embossed on them for identification.

10. Remove the cover (A) and the bracket (B) from the PCM (C).

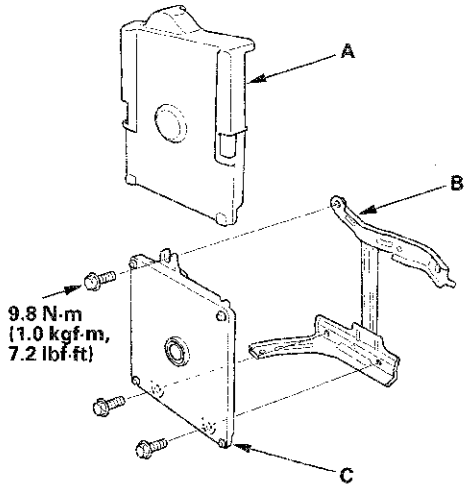

11. Install a known-good PCM in the reverse order of removal.

12. Do the battery installation procedure (see page 22-90).

    NOTE: While doing the battery installation procedure, do not start the engine.

13. Turn the ignition switch to ON (II).

    NOTE: DTC P0630 "VIN Not Programmed or Mismatch" may be stored because the VIN has not been programmed into the PCM; ignore it, and continue this procedure.

14. Manually input the VIN to the PCM with the HDS.

15. Select the IMMOBI SYSTEM with the HDS.

16. Enter the immobilizer code using the PCM replacement procedure in the HDS; this allows you to start the engine.

17. Update the PCM if it does not have the latest software (see page 11-215).

18. Reset the PCM with the HDS.

19. If the TP POSITION CHECK failed in step 5, clean the throttle body (see page 11-359).

20. Do the PCM idle learn procedure (see page 11-317).

21. Do the CKP pattern learn procedure (see page 11-5).

Failure Reproduction Technique

Make sure to follow these points while the vehicle is raised on a lift for the test-drive.

- Disable the VSA by pressing the VSA OFF switch.
- VSA DTC's may come on when test-driving on a lift. If the VSA DTC(s) come on, clear the DTC(s) with the HDS.

DTC Troubleshooting Index

NOTE: Before you troubleshoot, record all freeze data and any on-board snapshot, and review General Troubleshooting Information (see page 14-4).

DTC * (1)	Two Drive Cycle Detection	D Indicator	MIL	Detection Item	Page
P062F (0)	———	Blinks	ON or OFF * (3)	Powertrain Control Module (PCM) Internal Control Module Keep Alive Memory (KAM) Error	(see page 14-79)
P0705 (5) * (2)	———	Blinks	ON	Short in Transmission Range Switch Circuit (Multiple Shift-position Input)	(see page 14-80)
P0706 (6) * (2)	○	OFF	ON	Open in Transmission Range Switch Circuit	(see page 14-90)
P0711 (28) * (2)	———	Blinks	OFF	Problem in ATF Temperature Sensor Circuit	(see page 14-93)
P0712 (28) * (2)	———	Blinks	OFF	Short in ATF Temperature Sensor Circuit	(see page 14-95)
P0713 (28) * (2)	———	Blinks	OFF	Open in ATF Temperature Sensor Circuit	(see page 14-97)
P0716 (15) * (2)	———	Blinks	ON	Problem in Input Shaft (Mainshaft) Speed Sensor Circuit	(see page 14-99)
P0717 (15) * (2)	———	Blinks	ON	Problem in Input Shaft (Mainshaft) Speed Sensor Circuit (No Signal Input)	(see page 14-99)
P0718 (15) * (2)	○	Blinks	ON	Input Shaft (Mainshaft) Speed Sensor Intermittent Failure	(see page 14-104)
P0721 (9) * (2)	———	Blinks	ON	Problem in Output Shaft (Countershaft) Speed Sensor Circuit	(see page 14-109)
P0722 (9) * (2)	———	Blinks	ON	Problem in Output Shaft (Countershaft) Speed Sensor Circuit (No Signal Input)	(see page 14-109)
P0723 (9) * (2)	○	Blinks	ON	Output Shaft (Countershaft) Speed Sensor Intermittent Failure	(see page 14-114)
P0731 (64)	○	Blinks	OFF	Problem in 1st Clutch and 1st Clutch Hydraulic Circuit (1st Gear Incorrect Ratio)	(see page 14-118)
P0732 (64)	○	Blinks	OFF	Problem in 2nd Clutch and 2nd Clutch Hydraulic Circuit (2nd Gear Incorrect Ratio)	(see page 14-120)
P0733 (64)	○	Blinks	OFF	Problem in 3rd Clutch and 3rd Clutch Hydraulic Circuit (3rd Gear Incorrect Ratio)	(see page 14-121)
P0734 (64)	○	Blinks	OFF	Problem in 4th Clutch and 4th Clutch Hydraulic Circuit (4th Gear Incorrect Ratio)	(see page 14-123)
P0735 (64)	○	Blinks	OFF	Problem in 5th Clutch and 5th Clutch Hydraulic Circuit (5th Gear Incorrect Ratio)	(see page 14-124)
P0741 (40)	○	Blinks	OFF	Torque Converter Clutch Hydraulic Circuit Stuck OFF	(see page 14-126)
P0747 (76)	○	Blinks	ON	A/T Clutch Pressure Control Solenoid Valve A Stuck ON	(see page 14-127)

DTC *(1)	Two Drive Cycle Detection	D Indicator	MIL	Detection Item	Page
P0752 (70)	○	Blinks	ON	Shift Solenoid Valve A Stuck ON	(see page 14-129)
P0756 (71)	○	Blinks	ON	Shift Solenoid Valve B Stuck OFF	(see page 14-130)
P0757 (71)	○	Blinks	ON	Shift Solenoid Valve B Stuck ON	(see page 14-130)
P0761 (72)	○	Blinks	ON	Shift Solenoid Valve C Stuck OFF	(see page 14-132)
P0771 (74)	○	Blinks	ON	Shift Solenoid Valve E Stuck OFF	(see page 14-133)
P0776 (77)	○	Blinks	ON	A/T Clutch Pressure Control Solenoid Valve B Stuck OFF	(see page 14-135)
P0777 (77)	○	Blinks	ON	A/T Clutch Pressure Control Solenoid Valve B Stuck ON	(see page 14-135)
P0780 (45)	○	Blinks	ON	Shift Control System	(see page 14-136)
P0796 (78)	○	Blinks	ON	A/T Clutch Pressure Control Solenoid Valve C Stuck OFF	(see page 14-137)
P0797 (78)	○	Blinks	ON	A/T Clutch Pressure Control Solenoid Valve C Stuck ON	(see page 14-137)
P0842 (25) *(2)	○	Blinks	ON	Short in 2nd Clutch Transmission Fluid Pressure Switch Circuit, or 2nd Clutch Transmission Fluid Pressure Switch Stuck ON	(see page 14-139)
P0843 (25) *(2)	○	Blinks	ON	Open in 2nd Clutch Transmission Fluid Pressure Switch Circuit, or 2nd Clutch Transmission Fluid Pressure Switch Stuck OFF	(see page 14-141)
P0847 (26) *(2)	○	Blinks	OFF	Short in 3rd Clutch Transmission Fluid Pressure Switch Circuit, or 3rd Clutch Transmission Fluid Pressure Switch Stuck ON	(see page 14-143)
P0848 (26) *(2)	○	Blinks	OFF	Open in 3rd Clutch Transmission Fluid Pressure Switch Circuit, or 3rd Clutch Transmission Fluid Pressure Switch Stuck OFF	(see page 14-145)

NOTE:
* (1): The DTC in parentheses is the flash code the D indicator indicates when the data link connector (DLC) is connected to the HDS, and in the SCS mode.
* (2): This code is caused by an electrical circuit problem and cannot be caused by a mechanical problem in the transmission.
* (3): The MIL comes on when the PGM-FI system detects the same failure.

(cont'd)

DTC Troubleshooting Index (cont'd)

NOTE: Before you troubleshoot, record all freeze data and any on-board snapshot, and review General Troubleshooting Information (see page 14-4).

DTC*(1)	Two Drive Cycle Detection	D Indicator	MIL	Detection Item	Page
P0962 (16)*(2)	———	Blinks	ON	Problem in A/T Clutch Pressure Control Solenoid Valve A Circuit	(see page 14-148)
P0963 (16)*(2)	———	Blinks	ON	Problem in A/T Clutch Pressure Control Solenoid Valve A	(see page 14-152)
P0966 (23)*(2)	———	Blinks	ON	Problem in A/T Clutch Pressure Control Solenoid Valve B Circuit	(see page 14-154)
P0967 (23)*(2)	———	Blinks	ON	Problem in A/T Clutch Pressure Control Solenoid Valve B	(see page 14-157)
P0970 (29)*(2)	———	Blinks	ON	Problem in A/T Clutch Pressure Control Solenoid Valve C Circuit	(see page 14-159)
P0971 (29)*(2)	———	Blinks	ON	Problem in A/T Clutch Pressure Control Solenoid Valve C	(see page 14-162)
P0973 (7)*(2)	———	Blinks	ON	Short in Shift Solenoid Valve A Circuit	(see page 14-164)
P0974 (7)*(2)	———	Blinks	ON	Open in Shift Solenoid Valve A Circuit	(see page 14-166)
P0976 (8)*(2)	———	Blinks	ON	Short in Shift Solenoid Valve B Circuit	(see page 14-169)
P0977 (8)*(2)	———	Blinks	ON	Open in Shift Solenoid Valve B Circuit	(see page 14-172)
P0979 (22)*(2)	———	Blinks	ON	Short in Shift Solenoid Valve C Circuit	(see page 14-175)
P0980 (22)*(2)	———	Blinks	ON	Open in Shift Solenoid Valve C Circuit	(see page 14-177)
P0982 (60)*(2)	———	Blinks	ON	Short in Shift Solenoid Valve D Circuit	(see page 14-181)
P0983 (60)*(2)	———	Blinks	ON	Open in Shift Solenoid Valve D Circuit	(see page 14-183)
P0985 (61)*(2)	———	Blinks	ON	Short in Shift Solenoid Valve E Circuit	(see page 14-187)
P0986 (61)*(2)	———	Blinks	ON	Open in Shift Solenoid Valve E Circuit	(see page 14-189)
P16C0 (99)	———	OFF	ON	PCM A/T Control System Incomplete Update	(see page 14-192)
P1717 (62)*(2)	○	Blinks	OFF	Open in Transmission Range Switch ATP RVS Switch Circuit	(see page 14-193)

DTC *(1)	Two Drive Cycle Detection	D Indicator	MIL	Detection Item	Page
P1730 (45)	○	Blinks	ON	Problem in Shift Control System: • Shift Solenoid Valves A or D Stuck OFF • Shift Solenoid Valve B Stuck ON • Shift Valves A, B, or D Stuck	(see page 14-195)
P1731 (45)	○	Blinks	ON	Problem in Shift Control System: • Shift Solenoid Valve E Stuck ON • Shift Valve E Stuck • A/T Clutch Pressure Control Solenoid Valve A Stuck OFF	(see page 14-197)
P1732 (45)	○	Blinks	ON	Problem in Shift Control System: • Shift Solenoid Valves B or C Stuck ON • Shift Valves B or C Stuck	(see page 14-198)
P1733 (45)	○	Blinks	ON	Problem in Shift Control System: • Shift Solenoid Valve D Stuck ON • Shift Valve D Stuck • A/T Clutch Pressure Control Solenoid Valve C Stuck OFF	(see page 14-200)
P1734 (45)	○	Blinks	ON	Problem in Shift Control System: • Shift Solenoid Valves B or C Stuck OFF • Shift Valves B or C Stuck	(see page 14-201)
U0029 (107)	———	Blinks	ON or OFF *(3)	F-CAN Malfunction (F-CAN BUS-OFF (PCM))	(see page 14-203)
U0122 (107)	———	Blinks	OFF	F-CAN Malfunction (PCM-VSA Modulator-Control Unit)	(see page 14-204)
U0155 (107)	———	Blinks	ON or OFF *(3)	F-CAN Malfunction (PCM-Gauge Control Module)	(see page 14-205)

NOTE:

* (1): The DTC in parentheses is the flash code the D indicator indicates when the data link connector (DLC) is connected to the HDS, and in the SCS mode.
* (2): This code is caused by an electrical circuit problem and cannot be caused by a mechanical problem in the transmission.
* (3): The MIL comes on when the PGM-FI system detects the same failure.

Symptom Troubleshooting Index

Symptom	Probable Cause(s)	Notes
When you turn the ignition switch to ON (II), the D indicator comes on and stays on in all shift lever positions, or it never comes on at all	• F-CAN communication line error • Gauge control module defective • PCM defective	• Check the F-CAN communication line for a DTC (see page 11-182). • Check the A/T gear position indicator drive circuit in the gauge control module by using the gauge control module self-diagnostic function (see page 22-304).
A/T gear position indicator does not come on while the shift lever is in that position	• F-CAN communication line error • Gauge control module defective • PCM defective • Transmission range switch defective	• Check the F-CAN communication line for a DTC (see page 11-182). • Check the A/T gear position indicator drive circuit in the gauge control module by using the gauge control module self-diagnostic function (see page 22-304). • Inspect the transmission range switch (see page 14-278).
Shift lever cannot be moved from P while pressing on the brake pedal	• Accelerator pedal position sensor circuit • Accelerator pedal position sensor defective • Brake pedal position switch circuit • Brake pedal position switch defective • Shift lock solenoid defective • Shift lock solenoid control circuit • Shift lock mechanism defective • Throttle body defective • Transmission range switch ATPP switch stuck OFF • Transmission range switch ATPP switch line opened	• Inspect the APP sensor signal (see page 11-258). • Troubleshoot the shift lock system circuit (see page 14-289). • Test the shift lock solenoid (see page 14-296). • Inspect the transmission range switch (see page 14-278).
Ignition switch cannot be moved from ACCESSORY (I) to LOCK (0) (key is pushed in, the shift lever in P)	• Interlock control system circuit • Key interlock solenoid stuck ON • Park pin switch stuck OFF • Transmission range switch	• Troubleshoot the key interlock system circuit (see page 14-294). • Inspect the transmission range switch (see page 14-278).
HDS does not communicate with the PCM or the vehicle	DLC circuit error	Troubleshoot the DLC circuit (see page 11-192).

Symptom	Probable Cause(s)	Notes
Engine runs, but vehicle does not move in any gear	1. Low ATF level 2. Shift cable broken or out of adjustment 3. Connection between the shift cable and transmission or body is worn 4. ATF pump worn or binding 5. Regulator valve stuck or spring worn 6. ATF strainer clogged 7. Mainshaft worn or damaged 8. Final gears worn or damaged 9. Transmission-to-engine assembly error 10. Axle disengaged	• Check the ATF level, and check the ATF cooler lines for leaks and loose connections. If necessary, clean the ATF cooler lines. • Check for a loose shift cable at the shift lever and the selector control shaft. • Improper alignment of the ATF pump and the torque converter housing may cause ATF pump seizure. The symptoms are mostly an rpm-related ticking noise or a high pitched squeak. • Check the line pressure. • Be careful not to damage the torque converter housing when replacing the main ball bearing. You may also damage the ATF pump when you torque down the main valve body. This will result in ATF pump seizure if not detected. Use the proper tools. • Install the main seal flush with the torque converter housing. If you push it into the torque converter housing until it bottoms out, it will block the fluid return passage and result in damage. • Check the ATF strainer for debris. If the ATF strainer is clogged with particles of steel or aluminum, inspect the ATF pump. If the ATF pump is OK, find the damaged components that caused the debris. If no cause for contamination is found, replace the torque converter. • Inspect the differential pinion gears for wear. If the differential pinion gears are worn, replace the differential assembly, replace the ATF strainer, thoroughly clean the transmission, and clean the torque converter, cooler, and lines.
Vehicle moves in 2 and R, but not in D, D3, or 1	1. 1st accumulator defective 2. 1st gears worn or damaged 3. 1st clutch defective	• Check the 1st clutch pressure. • Inspect the clutch piston, the clutch piston check valve, and the O-rings. Check the spring retainer and the retainer seal for wear and damage. Inspect the clearance between the clutch end-plate and the top disc. If the clearance is out of tolerance, inspect the clutch discs and the plates for wear and damage. If the discs are worn or damaged, replace them as a set. Inspect the clutch wave-plate height. If the height is out of tolerance, replace the wave-plate. If the discs and the plates are OK, adjust the clearance with the clutch end-plate. • Inspect the 1st clutch feed pipe. If the 1st clutch feed pipe is scored, replace the end cover. • Replace the secondary shaft if the bushing for the 1st clutch feed pipe is loose or damaged.

(cont'd)

Symptom Troubleshooting Index (cont'd)

Symptom	Probable Cause(s)	Notes
Vehicle moves in D, D3, 1, and R, but not in 2	1. 2nd accumulator defective 2. 2nd gears worn or damaged 3. 2nd clutch defective	• Check the 2nd clutch pressure. • Inspect the clutch piston, the clutch piston check valve, and the O-rings. Check the spring retainer and the retainer seal for wear and damage. Inspect the clearance between the clutch end-plate and the top disc. If the clearance is out of tolerance, inspect the clutch discs and the plates for wear and damage. If the discs are worn or damaged, replace them as a set. Inspect the clutch wave-plate height. If the height is out of tolerance, replace the wave-plate. If the discs and the plates are OK, adjust the clearance with the clutch end-plate.
Vehicle moves in D, D3, 2, and 1, but not in R	1. Shift solenoid valve E defective 2. Shift fork shaft stuck 3. Shift valve E defective 4. 4th/reverse accumulator defective 5. 4th clutch defective 6. Reverse gears worn or damaged	• Check for a stored DTC, and check for loose connectors. • Inspect shift solenoid valve E for seizure, and the O-rings for wear and damage. • Check for a missing shift fork bolt on the shift fork shaft. • Check the 4th clutch pressure. • Inspect the clutch piston, the clutch piston check valve, and the O-rings. Check the spring retainer for wear and damage. Inspect the clearance between the clutch end-plate and the top disc. If the clearance is out of tolerance, inspect the clutch discs and the plates for wear and damage. If the discs are worn or damaged, replace them as a set. Inspect the clutch wave-plate height. If the height is out of tolerance, replace the wave-plate. If the discs and the plates are OK, adjust the clearance with the clutch end-plate. • Inspect the reverse selector gear teeth chamfers, and inspect the engagement teeth chamfers of the countershaft 4th gear and the reverse gear. Replace the reverse gears and the reverse selector if they are worn or damaged. If the transmission makes a clicking, grinding, or whirring noise, also replace the mainshaft 4th gear, the reverse idler gear, and the countershaft 4th gear.
Poor acceleration; flares when starting off in D, D3, and R; stall speed high in 2 and 1, and in D and D3 in 1st and 2nd	1. Low ATF level 2. Shift cable broken or out of adjustment 3. ATF pump worn or binding 4. Regulator valve stuck or spring worn 5. ATF strainer clogged 6. Torque converter check valve defective	• Check the ATF level, and check the ATF cooler lines for leaks and loose connections. If necessary, clean the ATF cooler lines. • Check for a loose shift cable at the shift lever and the selector control shaft. • Improper alignment of the ATF pump and the torque converter housing may cause ATF pump seizure. The symptoms are mostly an rpm-related ticking noise or a high pitched squeak. • Check the ATF strainer for debris. If the ATF strainer is clogged with particles of steel or aluminum, inspect the ATF pump. If the ATF pump is OK, find the damaged components that caused the debris. If no cause for contamination is found, replace the torque converter.

Symptom	Probable Cause(s)	Notes
Poor acceleration; flares when starting off in D, D3, and R; stall speed high when starting off in 2	2nd clutch defective	• Check the 2nd clutch pressure. • Inspect the clutch piston, the clutch piston check valve, and the O-rings. Check the spring retainer and the retainer seal for wear and damage. Inspect the clearance between the clutch end-plate and the top disc. If the clearance is out of tolerance, inspect the clutch discs and the plates for wear and damage. If the discs are worn or damaged, replace them as a set. Inspect the clutch wave-plate height. If the height is out of tolerance, replace the wave-plate. If the discs and the plates are OK, adjust the clearance with the clutch end-plate.
Poor acceleration; flares when starting off in D, D3, and R; stall speed high in R	1. Shift cable broken or out of adjustment 2. 4th clutch defective	• Check for a loose shift cable at the shift lever and the selector control shaft. • Check the 4th clutch pressure in D and R. • Inspect the clutch piston, the clutch piston check valve, and the O-rings. Check the spring retainer for wear and damage. Inspect the clearance between the clutch end-plate and the top disc. If the clearance is out of tolerance, inspect the clutch discs and the plates for wear and damage. If the discs are worn or damaged, replace them as a set. Inspect the clutch wave-plate height. If the height is out of tolerance, replace the wave-plate. If the discs and the plates are OK, adjust the clearance with the clutch end-plate.
Poor acceleration; stall speed low in 2 and 1, and in D and D3 in 1st and 2nd	1. Shift solenoid valve E defective 2. Torque converter one-way clutch defective 3. Engine output low 4. Torque converter clutch piston defective 5. Lock-up shift valve defective	• Check for a stored DTC, and check for loose connectors. • Inspect shift solenoid valve E for seizure, and the O-rings for wear and damage. • Replace the torque converter.
Poor acceleration; stall speed low in R	1. Engine output low 2. Torque converter clutch piston defective 3. Lock-up shift valve defective 4. Torque converter one-way clutch defective	Replace the torque converter.

(cont'd)

Symptom Troubleshooting Index (cont'd)

Symptom	Probable Cause(s)	Notes
Engine idle vibration	1. Low ATF level 2. Shift solenoid valve E defective 3. Drive plate defective or transmission misassembled 4. Engine output low 5. Torque converter clutch piston defective 6. ATF pump worn or binding 7. Lock-up shift valve defective	• Check the ATF level, and check the ATF cooler lines for leaks and loose connections. If necessary, clean the ATF cooler lines. • Improper alignment of the ATF pump and the torque converter housing may cause ATF pump seizure. The symptoms are mostly an rpm-related ticking noise or a high pitched squeak. • Inspect the ATF strainer for clogging with particles of steel or aluminum. If the ATF strainer is clogged, replace it, and clean the torque converter, the cooler, and the lines. • Check for a stored DTC, and check for loose connectors. • Inspect shift solenoid valve E for seizure, and the O-rings for wear and damage. • Check for a misinstalled/damaged drive plate. • Check that the idle rpm in gear is the specified idle speed (see page 11-316). If the idle speed is correct, adjust the engine and the transmission mounts. • Replace the torque converter.
Vehicle moves in N	1. Excessive ATF 2. Foreign material in separator plate orifice 3. Relief valve defective 4. 1st clutch defective 5. 2nd clutch defective 6. 3rd clutch defective 7. 4th clutch defective 8. 5th clutch defective 9. Clearance between the clutch end-plate and the top disc incorrect 10. Needle bearing seized, worn, or damaged 11. Thrust washer seized, worn, or damaged	• Check the ATF level, and drain the ATF if it is over-filled. • Check the 1st, 2nd, 3rd, 4th, and 5th clutch pressures. • Check the ATF strainer for debris. If the ATF strainer is clogged with particles of steel or aluminum, inspect the ATF pump. If the ATF pump is OK, find the damaged components that caused the debris. If no cause for contamination is found, replace the torque converter. • Inspect the clutch piston, the clutch piston check valve, and the O-rings. Check the spring retainer and the retainer seal (1st, 2nd, and 3rd) for wear and damage. Inspect the clearance between the clutch end-plate and the top disc. If the clearance is out of tolerance, inspect the clutch discs and the plates for wear and damage. If the discs are worn or damaged, replace them as a set. Inspect the clutch wave-plate height. If the height is out of tolerance, replace the wave-plate. If the discs and the plates are OK, adjust the clearance with the clutch end-plate. • Inspect the 1st clutch feed pipe. If the 1st clutch feed pipe is scored, replace the end cover. • Inspect the 3rd clutch feed pipe. If the 3rd clutch feed pipe is scored, replace it and the O-ring under the feed pipe guide. • Replace the secondary shaft if the bushing for the 1st or the 3rd clutch feed pipe is loose or damaged. • Inspect the 5th clutch feed pipe. If the 5th clutch feed pipe is scored, replace it and the O-ring under the feed pipe guide. • Replace the mainshaft if the bushing for the 5th clutch feed pipe is loose or damaged.

Symptom	Probable Cause(s)	Notes
Late shift after shifting from N to D and D3, or excessive shock when shifted into D and D3	1. Shift solenoid valve E defective 2. A/T clutch pressure control solenoid valve A defective 3. A/T clutch pressure control solenoid valve B defective 4. A/T clutch pressure control solenoid valve C defective 5. Shift cable broken or out of adjustment 6. Connection between the shift cable and transmission or body is worn 7. Input shaft (mainshaft) speed sensor defective 8. Output shaft (countershaft) speed sensor defective 9. ATF temperature sensor defective 10. Foreign material in separator plate orifice 11. Servo control valve defective 12. 1st accumulator defective 13. 1st check ball stuck 14. Lock-up shift valve defective 15. 1st clutch defective	• Check for a stored DTC, and check for loose connectors. • Inspect shift solenoid valve E for seizure, and the O-rings for wear and damage. • Inspect A/T clutch pressure control solenoid valves A, B, and C filter/gasket and the O-rings for wear and damage, and inspect the solenoid valves for seizure. • Check the input shaft (mainshaft) speed sensor and the output shaft (countershaft) speed sensor installation. • Check for a loose shift cable at the shift lever and the selector control shaft. • Check the 1st clutch pressure. • Inspect the clutch piston, the clutch piston check valve, and the O-rings. Check the spring retainer and the retainer seal for wear and damage. Inspect the clearance between the clutch end-plate and the top disc. If the clearance is out of tolerance, inspect the clutch discs and the plates for wear and damage. If the discs are worn or damaged, replace them as a set. Inspect the clutch wave-plate height. If the height is out of tolerance, replace the wave-plate. If the discs and the plates are OK, adjust the clearance with the clutch end-plate. • Inspect the 1st clutch feed pipe. If the 1st clutch feed pipe is scored, replace the end cover. • Replace the secondary shaft if the bushing for the 1st clutch feed pipe is loose or damaged.

(cont'd)

Symptom Troubleshooting Index (cont'd)

Symptom	Probable Cause(s)	Notes
Late shift after shifting from N to R, or excessive shock when shifted into R	1. Shift solenoid valve E defective 2. A/T clutch pressure control solenoid valve A defective 3. Shift cable broken or out of adjustment 4. Loose or poor connection between the shift cable and transmission or body is worn 5. Input shaft (mainshaft) speed sensor defective 6. Output shaft (countershaft) speed sensor defective 7. ATF temperature sensor defective 8. Shift fork shaft stuck 9. Foreign material in separator plate orifice 10. Shift valve E defective 11. 4th/reverse accumulator defective 12. Lock-up shift valve defective 13. 4th clutch defective	• Check for a stored DTC, and check for loose connectors. • Inspect shift solenoid valve E for seizure, and the O-rings for wear and damage. • Inspect A/T clutch pressure control solenoid valve A filter/gasket and the O-rings for wear and damage, and inspect the solenoid valves for seizure. • Check the input shaft (mainshaft) speed sensor and the output shaft (countershaft) speed sensor installation. • Check for a loose shift cable at the shift lever and the selector control shaft. • Inspect the clutch piston, the clutch piston check valve, and the O-rings. Check the spring retainer for wear and damage. Inspect the clearance between the clutch end-plate and the top disc. If the clearance is out of tolerance, inspect the clutch discs and the plates for wear and damage. If the discs are worn or damaged, replace them as a set. Inspect the clutch wave-plate height. If the height is out of tolerance, replace the wave-plate. If the discs and the plates are OK, adjust the clearance with the clutch end-plate. • Check for a missing shift fork bolt on the shift fork shaft. • Check the 4th clutch pressure. • Inspect the servo valve and the O-ring.
Transmission does not shift	1. Input shaft (mainshaft) speed sensor defective 2. Output shaft (countershaft) speed sensor defective	• Check for a stored DTC, and check for loose connectors. • Check the input shaft (mainshaft) speed sensor and the output shaft (countershaft) speed sensor installation.
Excessive shock or flares on all upshifts and downshifts	1. A/T clutch pressure control solenoid valve B defective 2. A/T clutch pressure control solenoid valve C defective 3. Input shaft (mainshaft) speed sensor defective 4. Output shaft (countershaft) speed sensor defective 5. ATF temperature sensor defective 6. Foreign material in separator plate orifice	• Check for a stored DTC, and check for loose connectors. • Inspect A/T clutch pressure control solenoid valves B and C filter/gasket and the O-rings for wear and damage, and inspect the solenoid valves for seizure. • Check the input shaft (mainshaft) speed sensor and the output shaft (countershaft) speed sensor installation.

Symptom	Probable Cause(s)	Notes
Excessive shock or flares on 1-2 upshift or 2-1 downshift	1. Shift solenoid valve E defective 2. A/T clutch pressure control solenoid valve A defective 3. A/T clutch pressure control solenoid valve B defective 4. A/T clutch pressure control solenoid valve C defective 5. 2nd clutch transmission fluid pressure switch defective 6. Foreign material in separator plate orifice 7. 1st accumulator defective 8. 2nd accumulator defective 9. 1st check ball stuck 10. 2nd check ball stuck 11. Lock-up shift valve defective 12. 1st clutch defective 13. 2nd clutch defective	• Check for a stored DTC, and check for loose connectors. • Inspect shift solenoid valve E for seizure, and the O-rings for wear and damage. • Inspect A/T clutch pressure control solenoid valves A, B, and C filter/gasket and the O-rings for wear and damage, and inspect the solenoid valves for seizure. • Check the 1st and the 2nd clutch pressures. • Inspect the clutch piston, the clutch piston check valve, and the O-rings. Check the spring retainer and the retainer seal for wear and damage. Inspect the clearance between the clutch end-plate and the top disc. If the clearance is out of tolerance, inspect the clutch discs and the plates for wear and damage. If the discs are worn or damaged, replace them as a set. Inspect the clutch wave-plate height. If the height is out of tolerance, replace the wave-plate. If the discs and the plates are OK, adjust the clearance with the clutch end-plate. • Inspect the 1st clutch feed pipe. If the 1st clutch feed pipe is scored, replace the end cover. • Replace the secondary shaft if the bushing for the 1st clutch feed pipe is loose or damaged.
Excessive shock or flares on 2-3 upshift or 3-2 downshift	1. A/T clutch pressure control solenoid valve B defective 2. A/T clutch pressure control solenoid valve C defective 3. 3rd clutch transmission fluid pressure switch defective 4. Foreign material in separator plate orifice 5. 2nd accumulator defective 6. 3rd accumulator defective 7. 2nd check ball stuck 8. 2nd clutch defective 9. 3rd clutch defective	• Check for a stored DTC, and check for loose connectors. • Inspect A/T clutch pressure control solenoid valves B and C filter/gasket and the O-rings for wear and damage, and inspect the solenoid valves for seizure. • Check the 2nd and the 3rd clutch pressures. • Inspect the clutch piston, the clutch piston check valve, and the O-rings. Check the spring retainer and the retainer seal for wear and damage. Inspect the clearance between the clutch end-plate and the top disc. If the clearance is out of tolerance, inspect the clutch discs and the plates for wear and damage. If the discs are worn or damaged, replace them as a set. Inspect the clutch wave-plate height. If the height is out of tolerance, replace the wave-plate. If the discs and the plates are OK, adjust the clearance with the clutch end-plate. • Inspect the 3rd clutch feed pipe. If the 3rd clutch feed pipe is scored, replace it and the O-ring under the feed pipe guide. • Replace the secondary shaft if the bushing for the 3rd clutch feed pipe is loose or damaged.

(cont'd)

Symptom Troubleshooting Index (cont'd)

Symptom	Probable Cause(s)	Notes
Excessive shock or flares on 3-4 upshift or 4-3 downshift	1. A/T clutch pressure control solenoid valve B defective 2. A/T clutch pressure control solenoid valve C defective 3. Foreign material in separator plate orifice 4. 3rd accumulator defective 5. 4th/reverse accumulator defective 6. 3rd clutch defective 7. 4th clutch defective	• Check for a stored DTC, and check for loose connectors. • Inspect A/T clutch pressure control solenoid valves B and C filter/gasket and the O-rings for wear and damage, and inspect the solenoid valves for seizure. • Check the 3rd and the 4th clutch pressures. • Inspect the clutch piston, the clutch piston check valve, and the O-rings. Check the spring retainer and the retainer seal (3rd) for wear and damage. Inspect the clearance between the clutch end-plate and the top disc. If the clearance is out of tolerance, inspect the clutch discs and the plates for wear and damage. If the discs are worn or damaged, replace them as a set. Inspect the clutch wave-plate height. If the height is out of tolerance, replace the wave-plate. If the discs and the plates are OK, adjust the clearance with the clutch end-plate. • Inspect the 3rd clutch feed pipe. If the 3rd clutch feed pipe is scored, replace it and the O-ring under the feed pipe guide. • Replace the secondary shaft if the bushing for the 3rd clutch feed pipe is loose or damaged.
Excessive shock or flares on 4-5 upshift or 5-4 downshift	1. A/T clutch pressure control solenoid valve B defective 2. A/T clutch pressure control solenoid valve C defective 3. Foreign material in separator plate orifice 4. 4th/reverse accumulator defective 5. 5th accumulator defective 6. 4th clutch defective 7. 5th clutch defective	• Check for a stored DTC, and check for loose connectors. • Inspect A/T clutch pressure control solenoid valves B and C filter/gasket and the O-rings for wear and damage, and inspect the solenoid valves for seizure. • Check the 4th and the 5th clutch pressures. • Inspect the clutch piston, the clutch piston check valve, and the O-rings. Check the spring retainer for wear and damage. Inspect the clearance between the clutch end-plate and the top disc. If the clearance is out of tolerance, inspect the clutch discs and the plates for wear and damage. If the discs are worn or damaged, replace them as a set. Inspect the clutch wave-plate height. If the height is out of tolerance, replace the wave-plate. If the discs and the plates are OK, adjust the clearance with the clutch end-plate. • Inspect the 5th clutch feed pipe. If the 5th clutch feed pipe is scored, replace it and the O-ring under the feed pipe guide. • Replace the mainshaft if the bushing for the 5th clutch feed pipe is loose or damaged.

Symptom	Probable Cause(s)	Notes
Noise from transmission in all shift lever positions	1. ATF pump worn or binding 2. Mainshaft bearing, countershaft bearing, or secondary shaft bearing defective	• Improper alignment of the ATF pump and the torque converter housing may cause ATF pump seizure. The symptoms are mostly an rpm-related ticking noise or a high pitched squeak. • Be careful not to damage the torque converter housing when replacing the main ball bearing. You may also damage the ATF pump when you torque down the main valve body. This will result in ATF pump seizure if not detected. Use the proper tools. • Install the main seal flush with the torque converter housing. If you push it into the torque converter housing until it bottoms out, it will block the fluid return passage and result in damage. • Inspect the ATF strainer for clogging with particles of steel or aluminum. If the ATF strainer is clogged, replace it, and clean the torque converter, cooler, and lines. • Inspect the mainshaft, the countershaft, and the secondary shaft for wear or damage.
Vehicle does not accelerate above 31 mph (50 km/h)	Torque converter one-way clutch defective	Replace the torque converter.
Vibration in all shift lever positions	Drive plate defective or transmission misassembled	• Check for a misinstalled/damaged drive plate. • Check that the idle rpm in gear is the specified idle speed (see page 11-316). If the idle speed is correct, adjust the engine and the transmission mounts.
Shift lever does not operate smoothly	1. Transmission range switch defective or out of adjustment 2. Shift cable broken or out of adjustment 3. Connection between the shift cable and transmission or body is worn	• Check for a stored DTC, and check for loose connectors. • Inspect the transmission range switch for operation. • Check for a loose shift cable at the shift lever and the selector control shaft.
Transmission does not shift into P	1. Shift cable broken or out of adjustment 2. Connection between the shift cable and transmission or body is worn 3. Park mechanism defective	• Check for a loose shift cable at the shift lever and the transmission control shaft. • Check the park pawl spring installation and the park lever spring installation. If installation is incorrect, install the spring correctly. Make sure that the park lever stop is not installed upside down. Check the distance between the park pawl shaft and the park lever roller pin. If the distance is out of tolerance, adjust the distance with the park lever stop.

(cont'd)

Symptom Troubleshooting Index (cont'd)

Symptom	Probable Cause(s)	Notes
Torque converter clutch does not disengage	1. Shift solenoid valve E defective 2. A/T clutch pressure control solenoid valve A defective 3. Torque converter clutch piston defective 4. Lock-up shift valve defective 5. Lock-up control valve defective	• Check for a stored DTC, and check for loose connectors. • Inspect shift solenoid valve E for seizure, and the O-rings for wear and damage. • Inspect A/T clutch pressure control solenoid valve A filter/gasket and the O-rings for wear and damage, and inspect the solenoid valves for seizure. • Replace the torque converter.
Torque converter clutch does not operate smoothly	1. Shift solenoid valve E defective 2. A/T clutch pressure control solenoid valve A defective 3. Torque converter clutch piston defective 4. Torque converter check valve defective 5. Lock-up shift valve defective 6. Lock-up control valve defective	• Check for a stored DTC, and check for loose connectors. • Inspect shift solenoid valve E for seizure, and the O-rings for wear and damage. • Inspect A/T clutch pressure control solenoid valve A filter/gasket and the O-rings for wear and damage, and inspect the solenoid valves for seizure. • Replace the torque converter.
Torque converter clutch does not engage	1. Shift solenoid valve E defective 2. A/T clutch pressure control solenoid valve A defective 3. Input shaft (mainshaft) speed sensor defective 4. Output shaft (countershaft) speed sensor defective 5. Torque converter clutch piston defective 6. Torque converter check valve defective 7. Lock-up shift valve defective 8. Lock-up control valve defective	• Check for a stored DTC, and check for loose connectors. • Inspect shift solenoid valve E for seizure, and the O-rings for wear and damage. • Inspect A/T clutch pressure control solenoid valve A filter/gasket and the O-rings for wear and damage, and inspect the solenoid valves for seizure. • Replace the torque converter. • Check the input shaft (mainshaft) speed sensor and the output shaft (countershaft) speed sensor installation.
A/T gear position indicator does not indicate shift lever positions	1. Transmission range switch defective or out of adjustment 2. Shift cable broken or out of adjustment 3. Connection between the shift cable and transmission or body is worn	• Check for a stored DTC, and check for loose connectors. • Inspect the transmission range switch operation. • Check for a loose shift cable at the shift lever and the selector control shaft.
Speedometer and odometer do not work	Output shaft (countershaft) speed sensor defective	• Check for a stored DTC, and check for loose connectors. • Inspect the transmission range switch operation. • Check the output shaft (countershaft) speed sensor installation.
Engine does not rev to high rpm, and the transmission upshifts at low rpm (engine at normal operating temperature)	VTEC rocker arms defective	Check the engine rocker arms.

Component Location Index

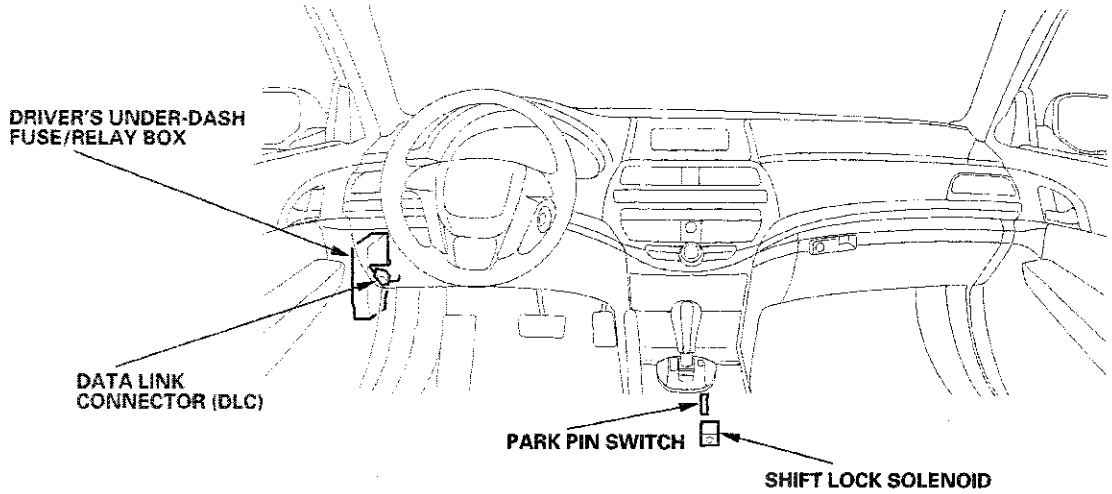

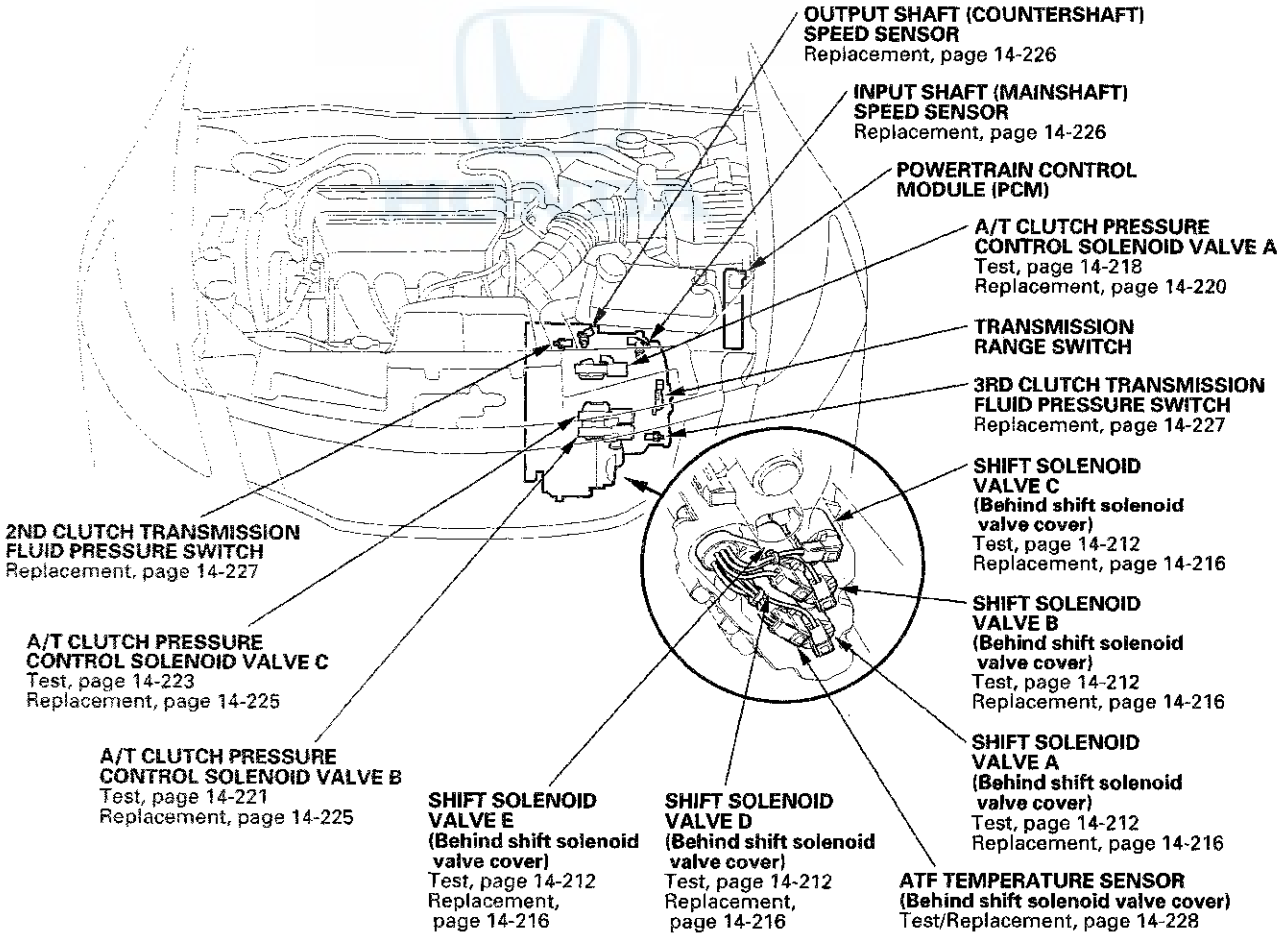

Automatic Transmission

System Description

General Operation

The automatic transmission is a combination of a three-element torque converter and triple-shaft electronically controlled unit which provides five speeds forward and one in reverse. The entire unit is positioned in line with the engine.

Torque Converter, Gears, and Clutches
The torque converter consists of a pump, turbine, and stator assembly in a single unit. The converter housing (pump) is connected to the engine crankshaft and turns as the engine turns. Around the outside of the torque converter is a ring gear which meshes with the starter drive gear when the engine is being started. The entire torque converter assembly serves as a flywheel while transmitting power to the transmission mainshaft, the transmission has three parallel shafts; the mainshaft, the countershaft, and the secondary shaft. The mainshaft is in line with the engine crankshaft, and includes the 4th and 5th clutches, and gears for 5th, 4th, reverse, and idler. The mainshaft reverse gear is integral with the mainshaft 4th gear. The countershaft includes the gears for 1st, 2nd, 3rd, 4th, 5th, reverse, park, and the final drive. The final drive gear is integral with the countershaft. The countershaft 4th gear and the countershaft reverse gear can be locked to the countershaft providing 4th or reverse gear, depending on which way the selector is moved. The secondary shaft includes the 1st, 2nd, and 3rd clutches, and gears for 1st, 2nd, 3rd, and idler. The idler shaft is located between the mainshaft and the secondary shaft, and the idler gear transmits power between the mainshaft and the secondary shaft. The gears on the mainshaft and the secondary shaft are in constant mesh with those on the countershaft. When certain combinations of gears in the transmission are engaged by the clutches, power is transmitted through the mainshaft, then to the secondary shaft to the countershaft, or through mainshaft to countershaft to provide drive.

Electronic Control
The electronic control system consists of the powertrain control module (PCM), sensors, and solenoid valves. Shifting and lock-up are electronically controlled for comfortable driving under all conditions. The PCM is located in the engine compartment.

Hydraulic Control
The valve bodies include the main valve body, the regulator valve body, and the servo body. They are bolted to the torque converter housing. The main valve body contains the manual valve, shift valves A, B, C, and E, the relief valve, the lock-up control valve, the cooler check valve, the servo control valve, and the ATF pump gears. The regulator valve body contains the regulator valve, the torque converter check valve, the lock-up shift valve, and the 1st and 3rd accumulators. The servo body contains the servo valve, shift valve D, the accumulators for 2nd, 4th, and 5th, and shift solenoid valves A, B, C, D, and E. Fluid from the regulator passes through the manual valve to the various control valves. The 1st, 3rd, and 5th clutches receive fluid from their respective feed pipes, and the 2nd and 4th clutches receive fluid from the internal hydraulic circuit.

Shift Control Mechanism
To shift gears, the PCM controls shift solenoid valves A, B, C, D, and E, and A/T clutch pressure control solenoid valves A, B, and C, while receiving input signals from various sensors and switches located throughout the vehicle. The shift solenoid valves shift the positions of the shift valves to switch the port leading hydraulic pressure to the clutch. A/T clutch pressure control solenoid valves A, B, and C regulate their respective pressure, and pressurize the clutches to engage them and their corresponding gears. The pressures of the A/T clutch pressure control solenoid valves also apply to the shift valves to switch the port.

Lock-up Mechanism
The lock-up mechanism operates in D (2nd, 3rd, 4th, and 5th gears), and in D3 (2nd and 3rd gears). The pressurized fluid is drained from the back of the torque converter through a fluid passage, causing the torque converter clutch piston to be held against the torque converter cover. As this takes place, the mainshaft rotates at the same speed as the engine crankshaft. Together with the hydraulic control, the PCM optimizes the timing and volume of the lock-up mechanism. When shift solenoid valve E is turned on by the PCM, shift solenoid valve E pressure switches the lock-up shift valve on and off. A/T clutch pressure control solenoid valve A and the lock-up control valve control the degree of lock-up.

Gear Selection
The shift lever has seven positions; P: PARK, R: REVERSE, N: NEUTRAL, D: 1st through 5th gear ranges, D3: 1st through 3rd gear ranges, 2: 2nd gear, and 1: 1st gear.

Position	Description
P: PARK	Front wheels locked; park pawl engaged with park gear on countershaft. All clutches are released.
R: REVERSE	Reverse; reverse selector engaged with countershaft reverse gear and 4th clutch engaged.
N: NEUTRAL	All clutches are released.
D: DRIVE (1st through 5th)	General driving; starts off in 1st, shifts automatically to 2nd, 3rd, 4th, then 5th, depending on vehicle speed and throttle position. Downshifts through 4th, 3rd, 2nd, and 1st on deceleration to stop. The lock-up mechanism operates in 2nd, 3rd, 4th, and 5th gears.
D3: DRIVE (1st through 3rd)	Used for rapid acceleration at highway speeds and general driving; up-hill and down-hill driving; starts off in 1st, shifts automatically to 2nd, then 3rd, depending on vehicle speed and throttle position. Downshifts through 2nd to 1st on deceleration to stop. The lock-up mechanism operates in 2nd and 3rd gears.
2: SECOND	Used for engine braking or better traction starting off on loose or slippery surfaces; stays in 2nd gear; does not shift up or down.
1: FIRST	Used for engine braking; stays in 1st gear; does not shift up.

Starting is possible only in P and N because of a slide-type neutral-safety switch.

Automatic Transmission (A/T) Gear Position Indicator
The A/T gear position indicator in the gauge control module shows which shift lever position has been selected without having to look down at the shift lever.

HONDA

System Description (cont'd)

Clutches and Gears

The five-speed automatic transmission uses hydraulically-actuated clutches to engage or disengage the transmission gears. When hydraulic pressure is introduced into the clutch drum, the clutch piston moves. This presses the friction discs and the steel plates together, locking them so they do not slip. Power is then transmitted through the engaged clutch pack to its hub-mounted gear. Likewise, when the hydraulic pressure is bled from the clutch pack, the piston releases the friction discs and the steel plates, and they are free to slide past each other. This allows the gear to spin independently on its shaft, transmitting no power.

1st Clutch
The 1st clutch engages/disengages 1st gear, and is located at the middle of the secondary shaft. The 1st clutch is joined back-to-back to the 3rd clutch. The 1st clutch is supplied hydraulic pressure by its ATF feed pipe within the secondary shaft.

2nd Clutch
The 2nd clutch engages/disengages 2nd gear, and is located at the end of the secondary shaft, opposite the end cover. The 2nd clutch is supplied hydraulic pressure by a circuit connected to the internal hydraulic circuit.

3rd Clutch
The 3rd clutch engages/disengages 3rd gear, and is located at the middle of the secondary shaft. The 3rd clutch is joined back-to-back to the 1st clutch. The 3rd clutch is supplied hydraulic pressure by its ATF feed pipe within the secondary shaft.

4th Clutch
The 4th clutch engages/disengages 4th gear, as well as reverse gear, and is located at the middle of the mainshaft. The 4th clutch is joined back-to-back to the 5th clutch. The 4th clutch is supplied hydraulic pressure by its ATF feed pipe within the mainshaft.

5th Clutch
The 5th clutch engages/disengages 5th gear, and is located at the middle of the mainshaft. The 5th clutch is joined back-to-back to the 4th clutch. The 5th clutch is supplied hydraulic pressure by its ATF feed pipe within the mainshaft.

Gear operation
Gears on the mainshaft:
- 4th gear engages/disengages with the mainshaft by the 4th clutch.
- 5th gear engages/disengages with the mainshaft by the 5th clutch.
- Reverse gear engages/disengages with the mainshaft by the 4th clutch.
- Idler gear is splined with the mainshaft, and rotates with the mainshaft.

Gears on the countershaft:
- Final drive gear is integral with the countershaft.
- 1st, 2nd, 3rd, 5th, and park gears are splined with the countershaft, and rotate with the countershaft.
- 4th gear and reverse gear rotate freely from the countershaft. The reverse selector engages 4th gear and reverse gear with the reverse selector hub. The reverse selector hub is splined to the countershaft so that 4th gear and the reverse gear engage with the countershaft.

Gears on the secondary shaft:
- 1st gear engages/disengages with the secondary shaft by the 1st clutch.
- 2nd gear engages/disengages with the secondary shaft by the 2nd clutch.
- 3rd gear engages/disengages with the secondary shaft by the 3rd clutch.
- Idler gear is splined with the secondary shaft, and rotates with the secondary shaft.

The idler gear on the idler shaft transmits power between the mainshaft and the secondary shaft.
The reverse idler gear transmits power from the mainshaft reverse gear to the countershaft reverse gear, and changes rotational direction of the countershaft to reverse.

Transmission Cutaway View

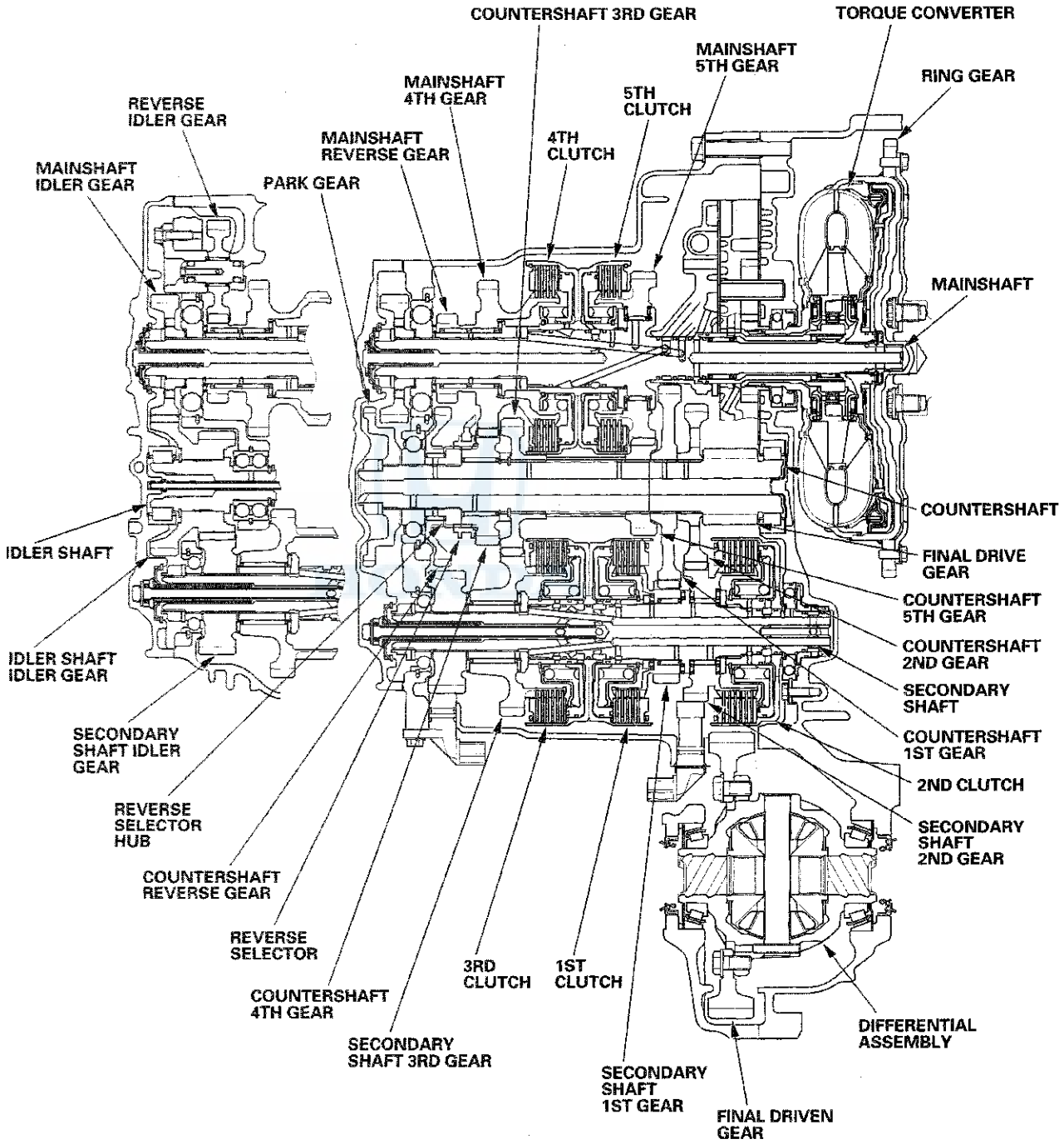

System Description (cont'd)

Power Flow

P Position
Hydraulic pressure is not applied to the clutches. Power is not transmitted to the countershaft. The countershaft is locked by the park pawl interlocking the park gear.

N Position
Engine power transmitted from the torque converter drives the mainshaft idler gear, the idler shaft idler gear, and the secondary shaft idler gear, but hydraulic pressure is not applied to the clutches. Power is not transmitted to the countershaft.
In this position, the position of the reverse selector differs according to whether the shift lever shifted from D or R:
- When shifted from D, the reverse selector engages with the countershaft 4th gear and the reverse selector hub, and 4th gear engages with the countershaft.
- When shifted from R, the reverse selector engages with the countershaft reverse gear and the reverse selector hub, and the reverse gear engages with the countershaft.

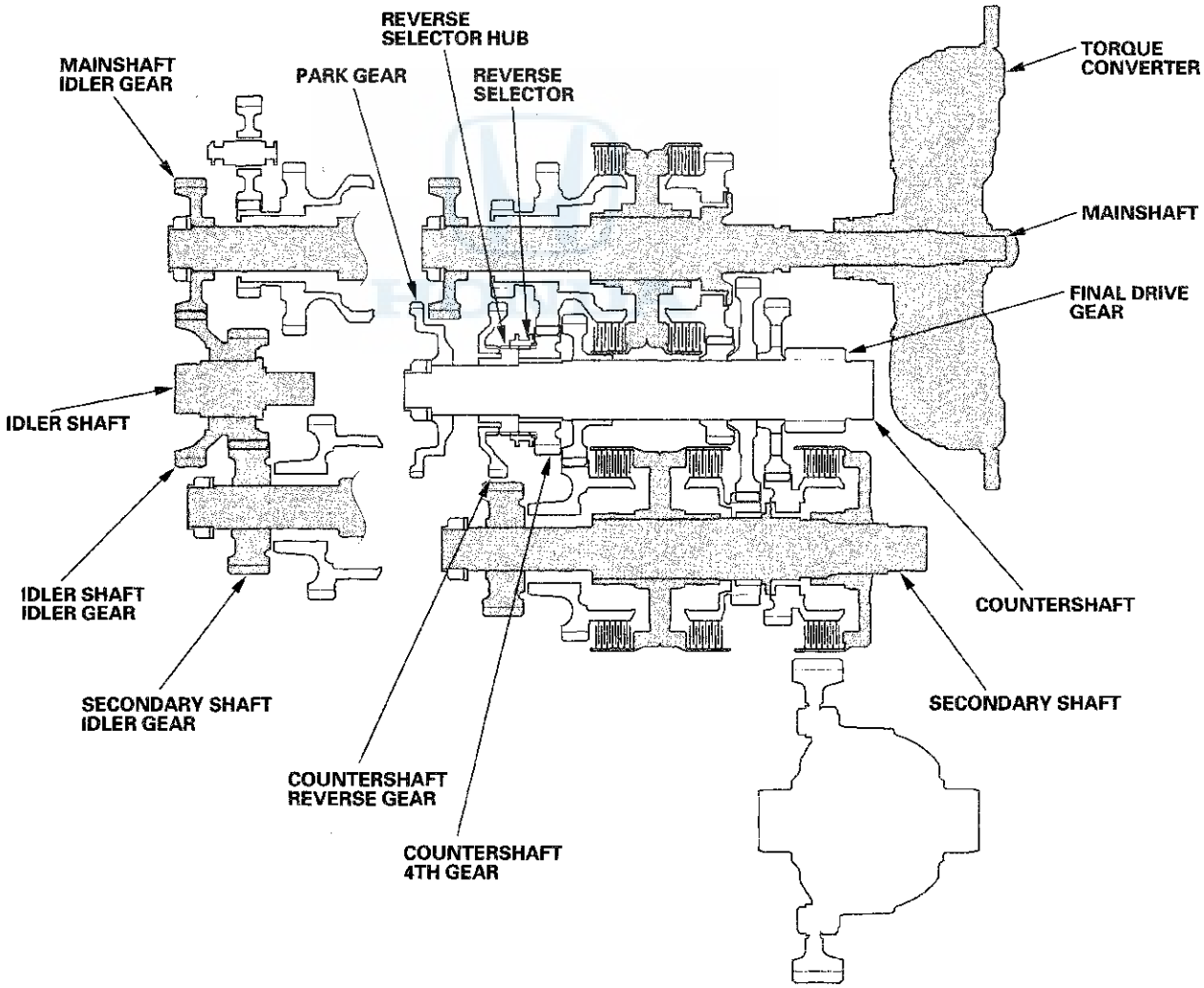

In 1st Gear

- Hydraulic pressure is applied to the 1st clutch, then the 1st clutch engages the secondary shaft 1st gear with the secondary shaft.
- The mainshaft idler gear drives the secondary shaft via the idler shaft idler gear and the secondary shaft idler gear.
- The secondary shaft 1st gear drives the countershaft 1st gear and the countershaft.
- Power is transmitted to the final drive gear, which in turn drives the final driven gear.

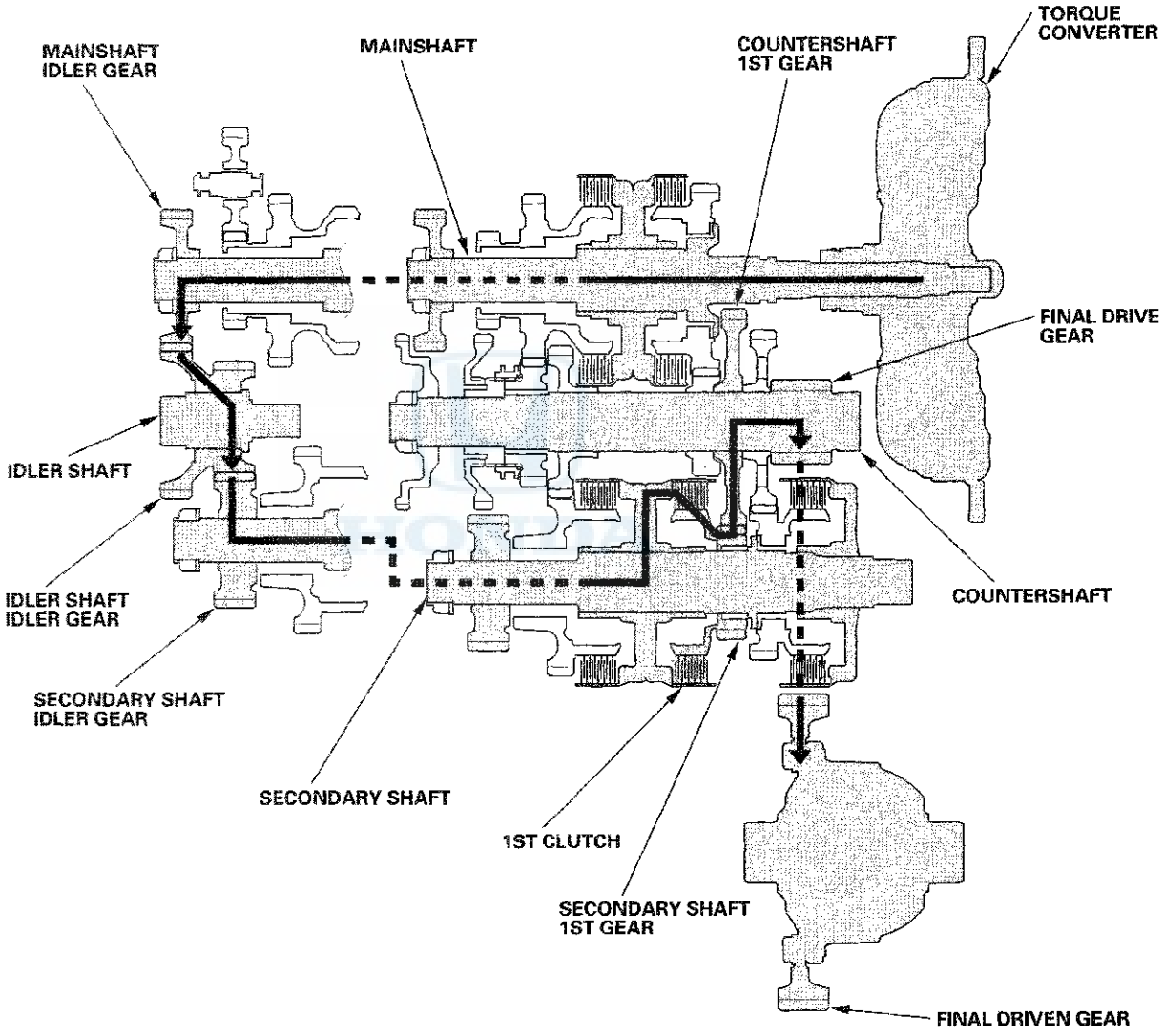

(cont'd)

System Description (cont'd)

Power Flow (cont'd)

In 2nd Gear

- Hydraulic pressure is applied to the 2nd clutch, then the 2nd clutch engages the secondary shaft 2nd gear with the secondary shaft.
- The mainshaft idler gear drives the secondary shaft via the idler shaft idler gear and the secondary shaft idler gear.
- The secondary shaft 2nd gear drives the countershaft 2nd gear and the countershaft.
- Power is transmitted to the final drive gear, which in turn drives the final driven gear.

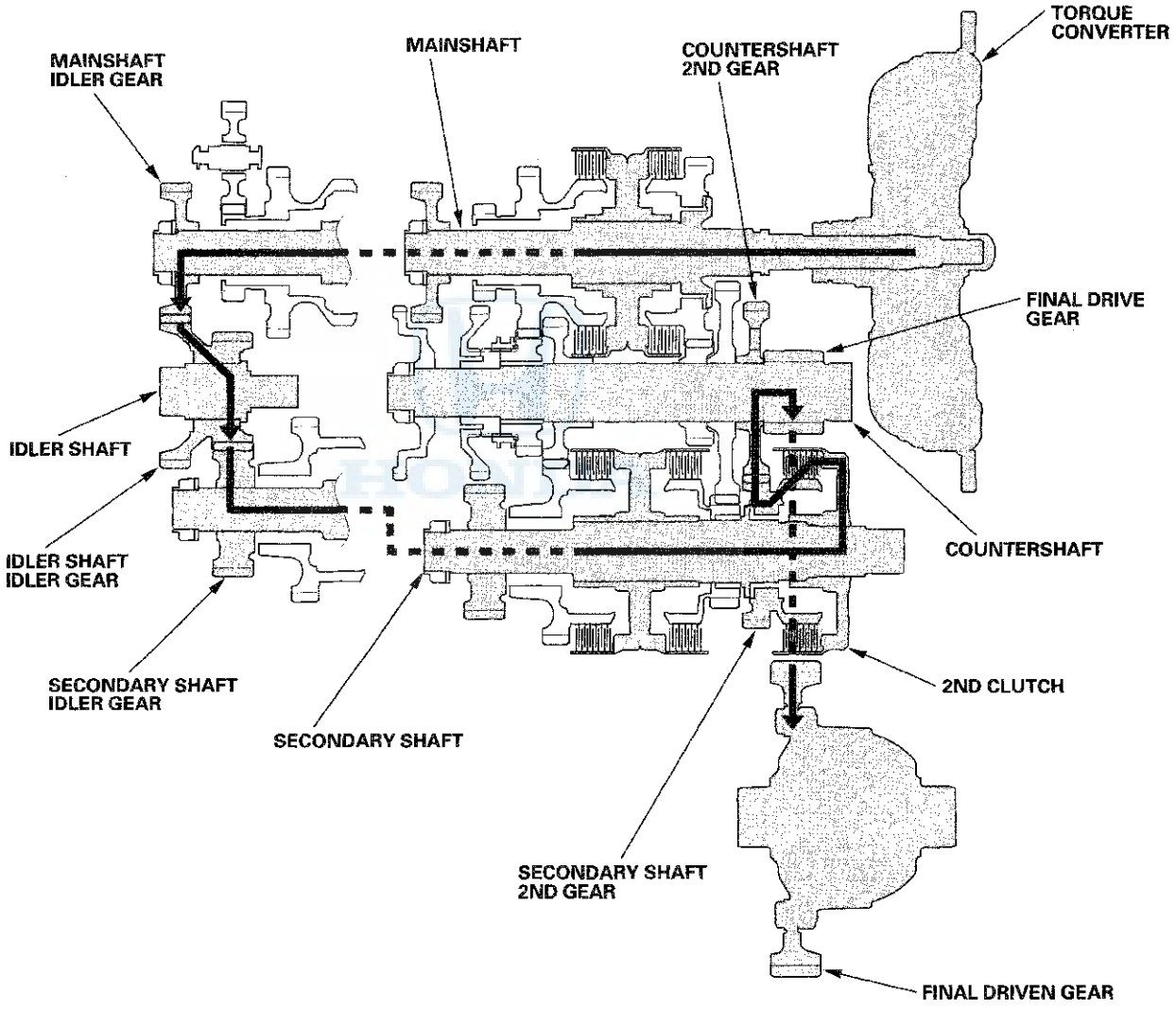

In 3rd Gear

- Hydraulic pressure is applied to the 3rd clutch, then the 3rd clutch engages the secondary shaft 3rd gear with the secondary shaft.
- The mainshaft idler gear drives the secondary shaft via the idler shaft idler gear and the secondary shaft idler gear.
- The secondary shaft 3rd gear drives the countershaft 3rd gear and the countershaft.
- Power is transmitted to the final drive gear, which in turn drives the final driven gear.

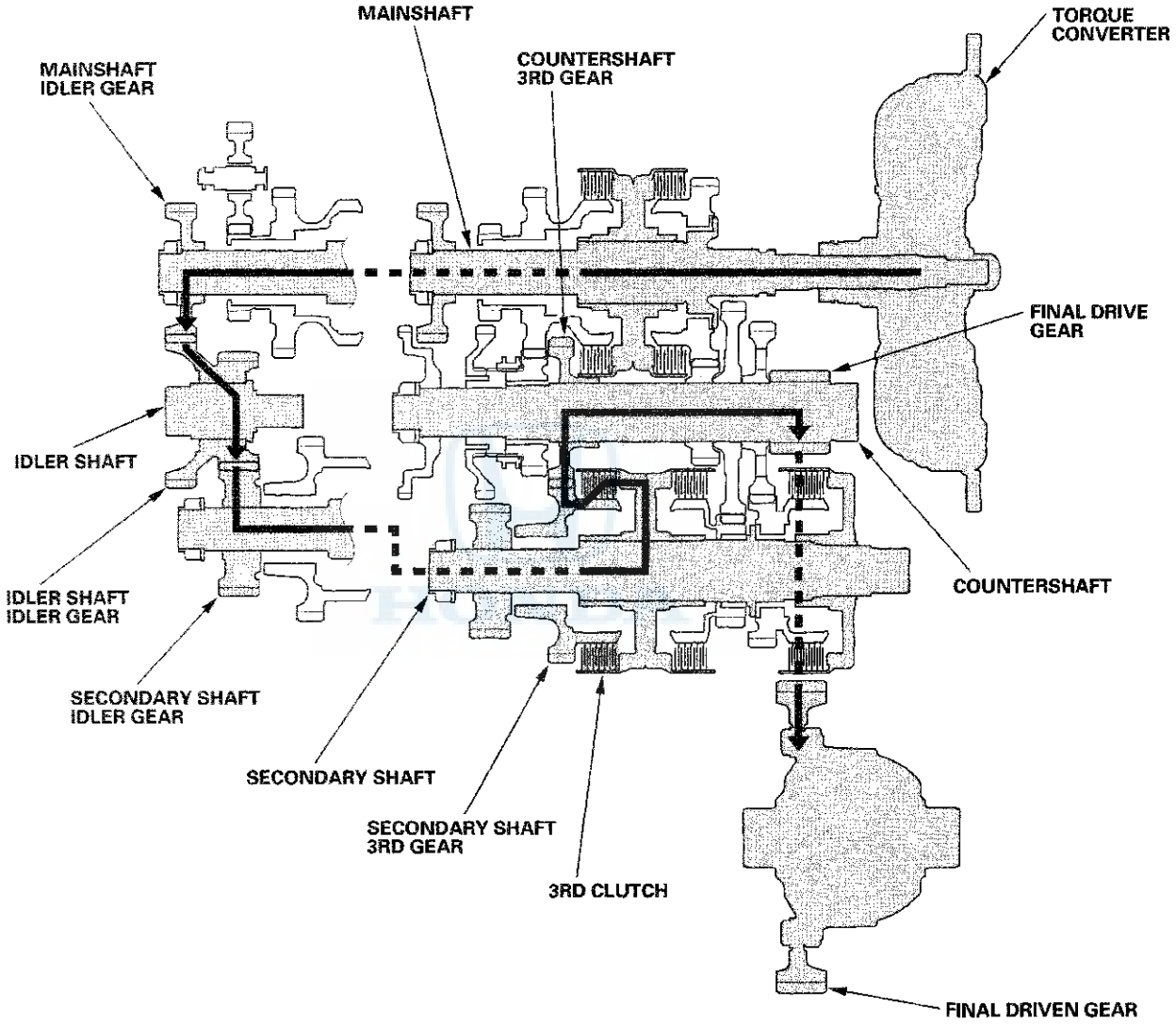

(cont'd)

System Description (cont'd)

Power Flow (cont'd)

In 4th Gear

- Hydraulic pressure is applied to the servo valve to engage the reverse selector with the countershaft 4th gear and the reverse selector hub while the shift lever is in forward range (D, D3, 2, and 1).
- Hydraulic pressure is also applied to the 4th clutch, then the 4th clutch engages the mainshaft 4th gear with the mainshaft.
- The mainshaft 4th gear drives the countershaft 4th gear and the countershaft.
- Power is transmitted to the final drive gear, which in turn drives the final driven gear.

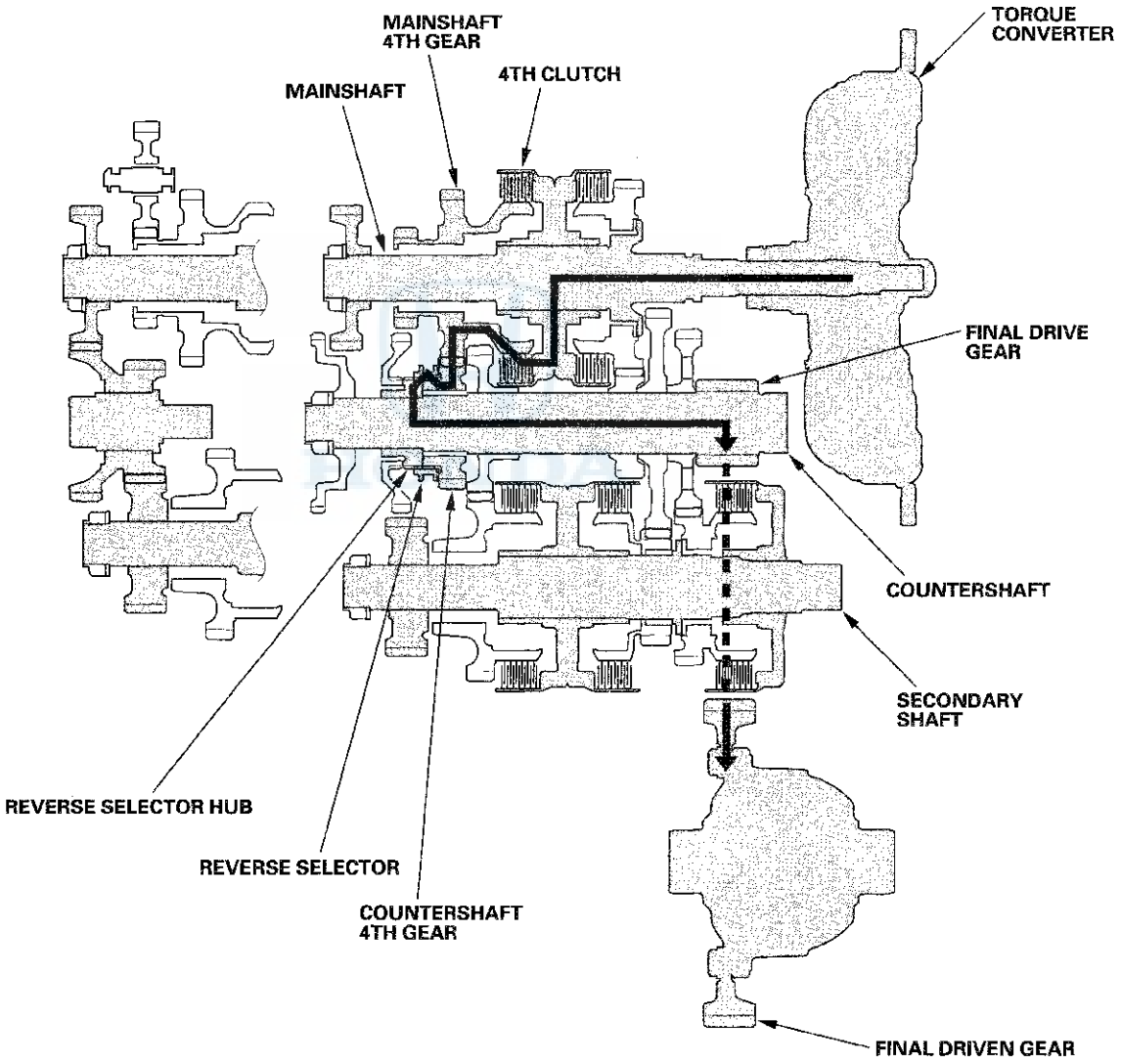

In 5th Gear

- Hydraulic pressure is applied to the 5th clutch, then the 5th clutch engages the mainshaft 5th gear with the mainshaft.
- The mainshaft 5th gear drives the countershaft 5th gear and the countershaft.
- Power is transmitted to the final drive gear, which in turn drives the final driven gear.

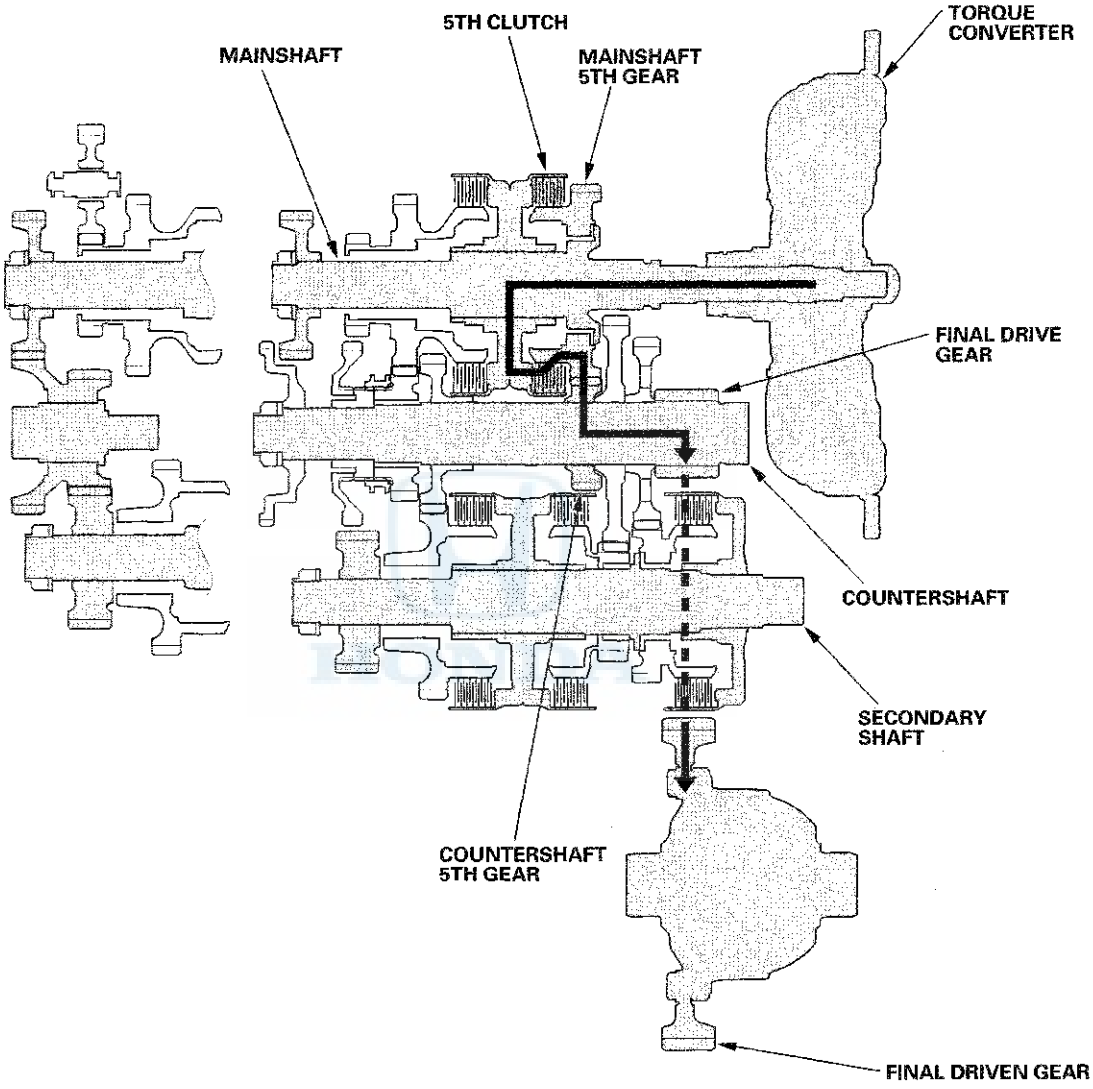

(cont'd)

System Description (cont'd)

Power Flow (cont'd)

R Position

- Hydraulic pressure is applied to the servo valve to engage the reverse selector with the countershaft reverse gear and the reverse selector hub while the shift lever is in R.
- Hydraulic pressure is also applied to the 4th clutch, then the 4th clutch engages the mainshaft reverse gear with the mainshaft.
- The mainshaft reverse gear drives the countershaft reverse gear via the reverse idler gear.
- The rotation direction of the countershaft reverse gear is changed by the reverse idler gear.
- The countershaft reverse gear drives the countershaft via the reverse selector, which drives the reverse selector hub.
- Power is transmitted to the final drive gear, which in turn drives the final driven gear.

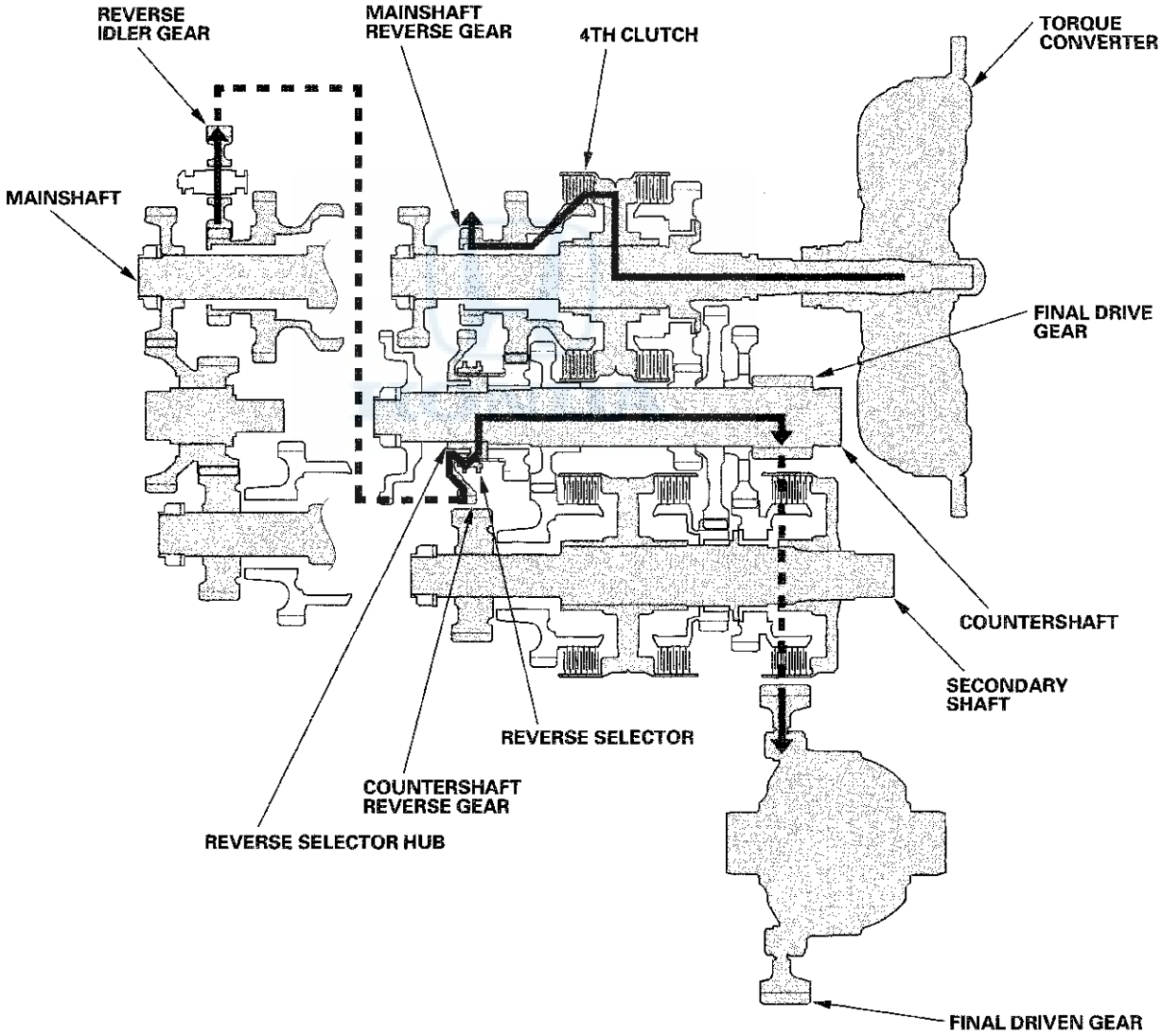

Electronic Control System

Functional Diagram

The electronic control system consists of the powertrain control module (PCM), sensors, and solenoid valves. Shifting and lock-up are electronically controlled for comfortable driving under all conditions.

The PCM receives input signals from sensors, switches, and other control units, processes data, and outputs signals for the engine control system and the A/T control system. The A/T control system includes shift control, grade logic control, clutch pressure control, and lock-up control.
The PCM switches the shift solenoid valves and the A/T clutch pressure control solenoid valves to control shifting transmission gears and lock-up torque converter clutch.

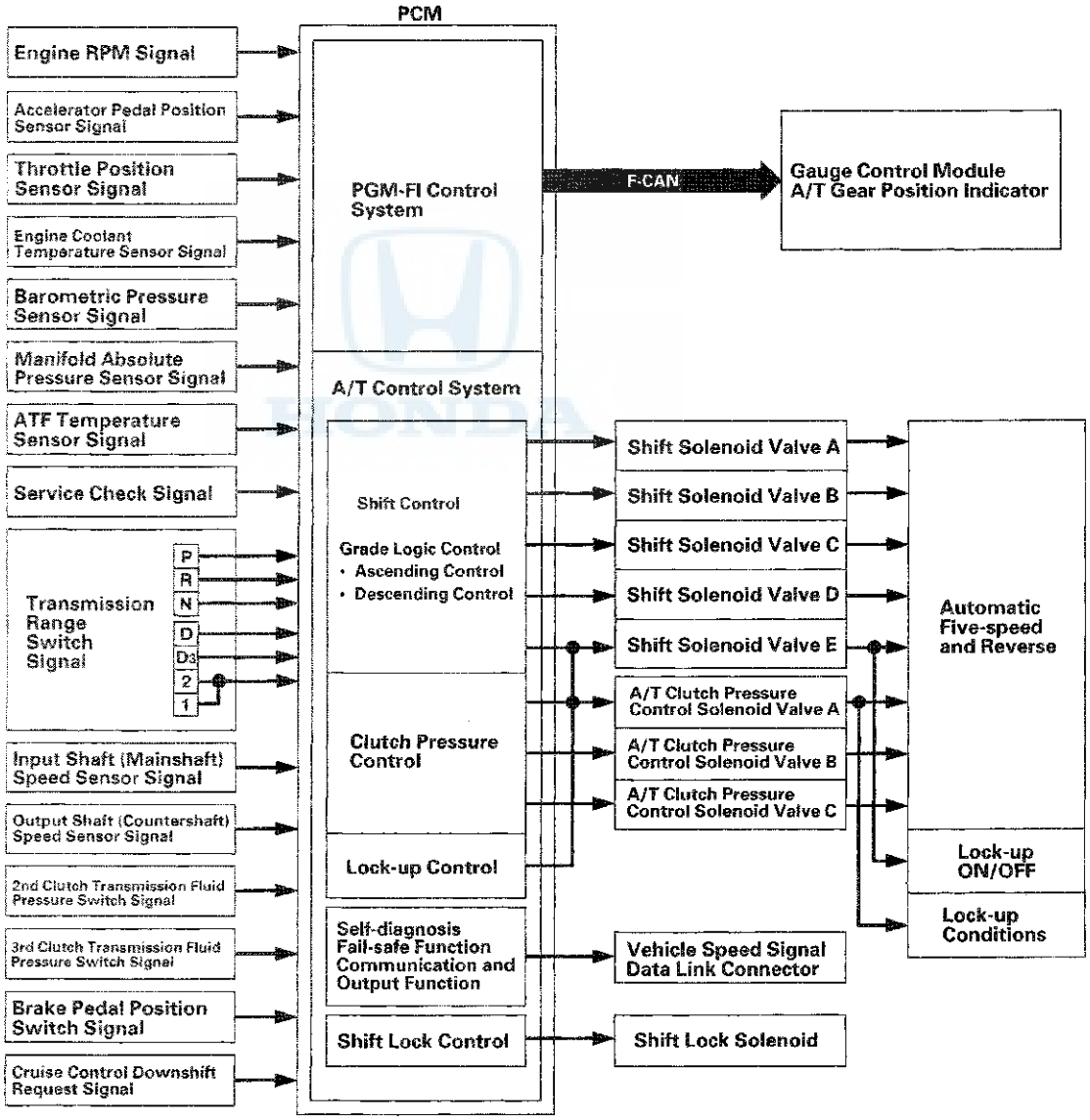

(cont'd)

System Description (cont'd)

Electronic Control System (cont'd)

Shift Control
The PCM instantly determines which gear should be selected by various signals sent from sensors and switches, and it actuates shift solenoid valves A, B, C, D, and E to control gear selection.

A grade logic control system has been adopted to control shifting in D and D3. The PCM compares actual driving conditions with programmed driving conditions, based on the input from the accelerator pedal position sensor, the engine coolant temperature sensor, the barometric pressure sensor, the brake pedal position switch signal, and the shift lever position signal, to control shifting while the vehicle is ascending or descending a slope.

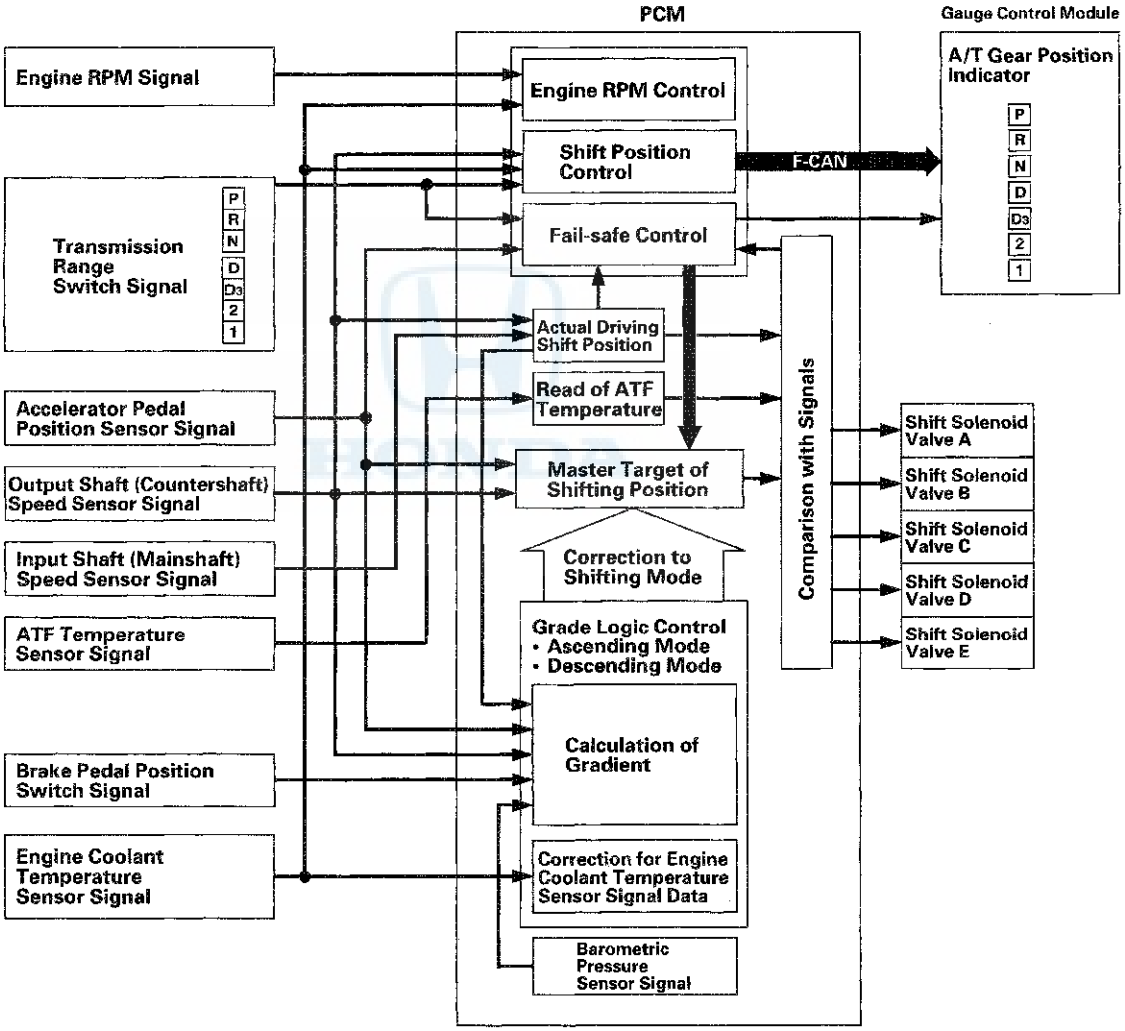

The PCM turns shift solenoid valves A, B, C, D, and E ON and OFF to control gear selection. The combination of driving signals to shift solenoid valves A, B, C, D, and E are shown in the table.

Position	Gear Position	Shift Solenoid Valves				
		A	B	C	D	E
D, D3	Shifting from N	OFF	ON	ON	OFF	OFF
	Stays in 1st	ON	ON	ON	OFF	OFF
	Shifting gears between 1st and 2nd	OFF	ON	ON	OFF	OFF
	Stays in 2nd	OFF	ON	OFF	ON	OFF or ON
	Shifting gears between 2nd and 3rd	OFF	ON	ON	ON	OFF or ON
	Stays in 3rd	OFF	OFF	ON	OFF	OFF or ON
D	Shifting gears between 3rd and 4th	OFF	OFF	OFF	OFF	OFF or ON
	Stays in 4th	ON	OFF	OFF	OFF	OFF or ON
	Shifting gears between 4th and 5th	ON	OFF	OFF	ON	OFF or ON
	Stays in 5th	ON	OFF	ON	ON	OFF or ON
2	2nd gear	OFF	ON	OFF	ON	OFF
1	1st gear	ON	ON	ON	OFF	OFF
R	Shifting from P and N	OFF	ON	OFF	OFF	ON
	Stays in reverse	ON	ON	OFF	OFF	ON
	Reverse inhibit	OFF	OFF	ON	OFF	OFF
P	Park	OFF	ON	OFF	OFF	ON
N	Neutral	OFF	ON	ON	OFF	OFF

(cont'd)

System Description (cont'd)

Electronic Control System (cont'd)

Grade Logic Control: Ascending Control
When the PCM determines that the vehicle is climbing a hill in D and D3, the system extends the engagement area of 2nd, 3rd, and 4th gears to prevent the transmission from frequently shifting between 2nd and 3rd gears, between 3rd and 4th gears, and between 4th and 5th gears. The PCM does this so the vehicle can run smooth and have more power when needed.

Shift programs stored in the PCM between 2nd and 3rd gears, between 3rd and 4th gears, and between 4th and 5th gears, enable it to automatically select the most suitable gear according to the magnitude of a gradient.

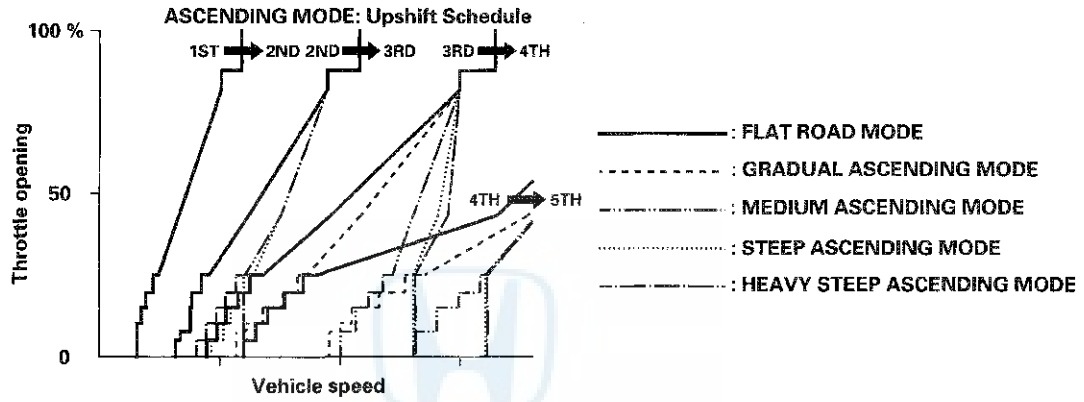

Grade Logic Control: Descending Control
When the PCM determines that the vehicle is going down a hill in D and D3, the upshift speed from 4th to 5th gear, from 3rd to 4th gear, and from 2nd to 3rd gear (when the throttle is closed) becomes higher than the set speed for flat road driving to extend the 4th gear, 3rd gear, and 2nd gear driving area. This, in combination with engine braking from the deceleration lock-up, achieves smooth driving when the vehicle is descending. There are three descending modes with different 4th gear driving areas, 3rd gear driving areas, and 2nd gear driving areas according to the magnitude of a gradient stored in the PCM. When the vehicle is in 5th gear or 4th gear, and you are decelerating when you are applying the brakes on a steep hill, the transmission will downshift to lower gear. When you accelerate, the transmission will then return to a higher gear.

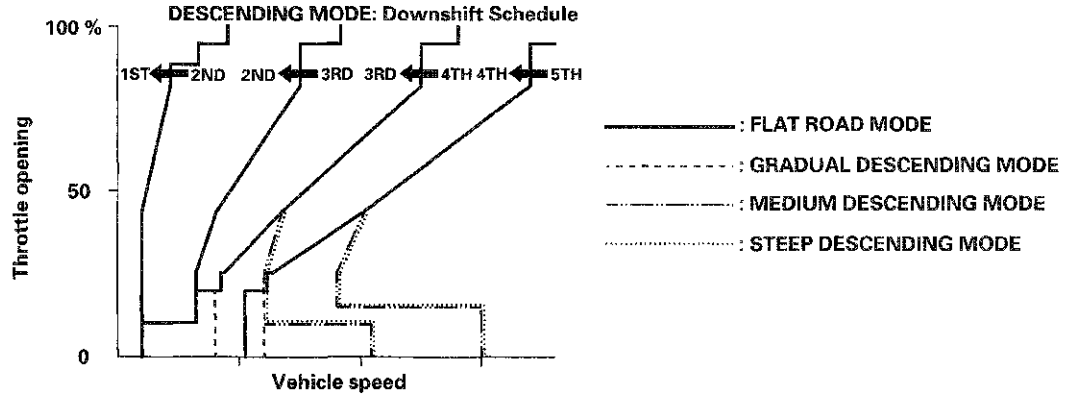

Shift-Hold Control

When negotiating winding roads, the throttle is suddenly released and the brakes are applied, as is the case when decelerating at the entrance of a curve, shift-hold control keeps the transmission in its current (lower) ratio as it negotiates the corner and accelerates out.

When the vehicle is driven aggressively on a winding road, the PCM will extend the engagement time of 3rd gear and 4th gear to prevent the transmission from frequently shifting between 3rd, 4th, and 5th gears. This allows the driver to have more control for both acceleration and deceleration.

The PCM monitors the average change in the vehicle speed and throttle over time. When these values exceed those for normal driving conditions, the upshift from 3rd to 4th gear and 4th to 5th gear is delayed. This gives more control over power, and the engine braking when the driver is driving aggressively around winding roads. The transmission will resume the normal upshift pattern after the PCM determines that normal driving has resumed.

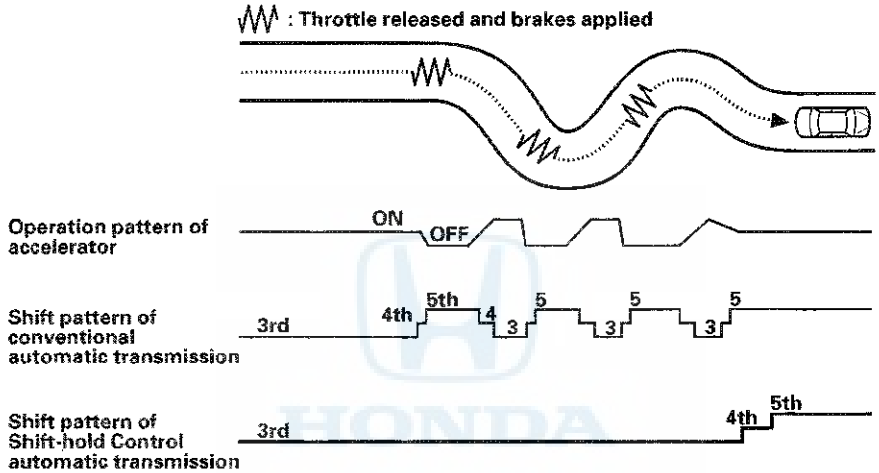

(cont'd)

System Description (cont'd)

Electronic Control System (cont'd)

Clutch Pressure Control

The PCM actuates A/T clutch pressure control solenoid valves A, B, and C to control the clutch pressure. When shifting between lower and higher gears, the clutch pressure regulated by A/T clutch pressure control solenoid valves A, B, and C engages and disengages the clutch smoothly.

The PCM receives input signals from the various sensors and switches, processes data, and outputs current to A/T clutch pressure control solenoid valves A, B, and C.

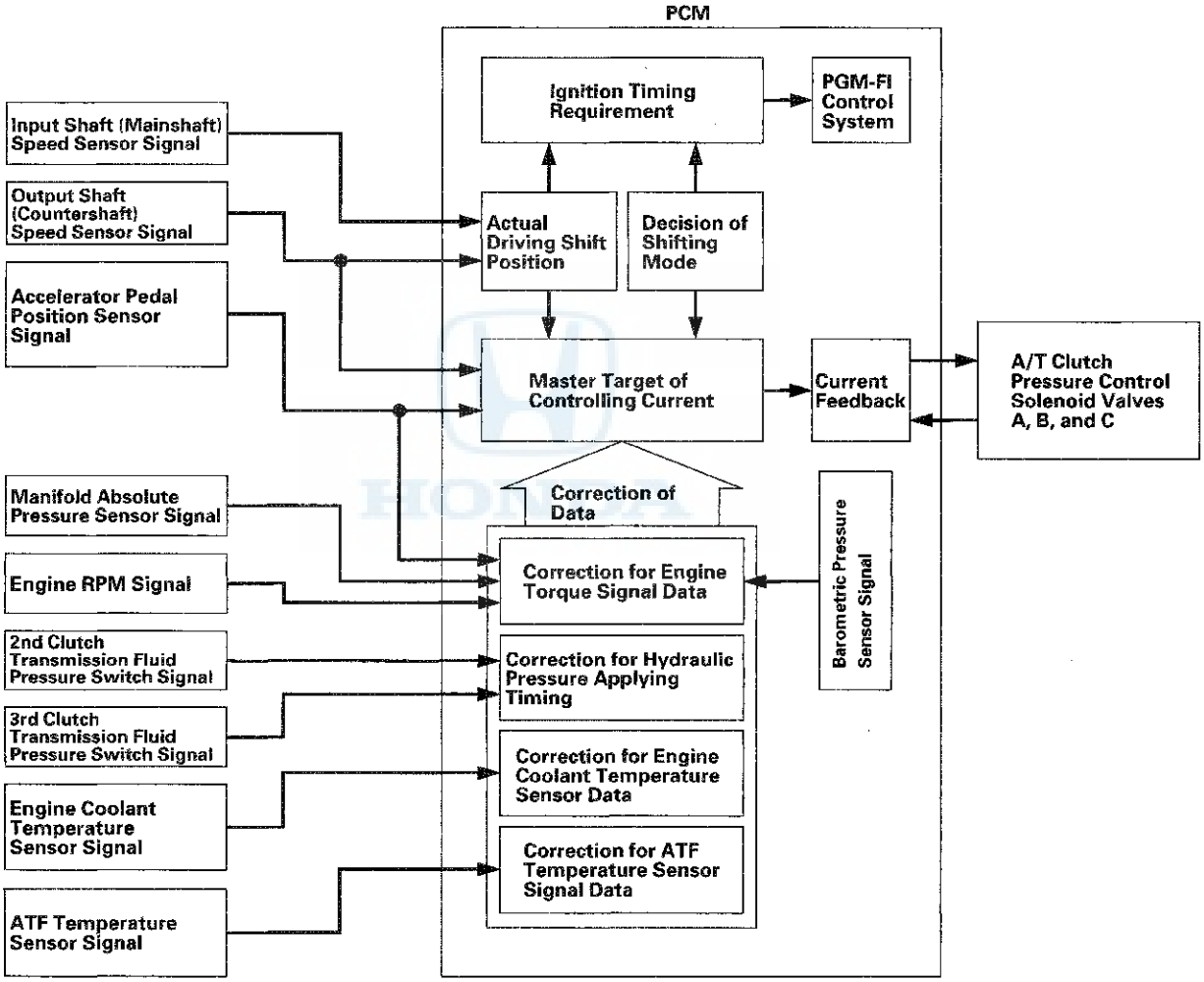

Lock-up Control

Shift solenoid valve E controls the hydraulic pressure to switch the lock-up shift valve ON and OFF. The PCM actuates shift solenoid valve E and A/T clutch pressure control solenoid valve A to start lock-up. A/T clutch pressure control solenoid valve A applies and regulates hydraulic pressure to the lock-up control valve to control the volume of the lock-up.

The lock-up mechanism operates in D (2nd, 3rd, 4th, and 5th gears), and in D3 (2nd and 3rd gears).

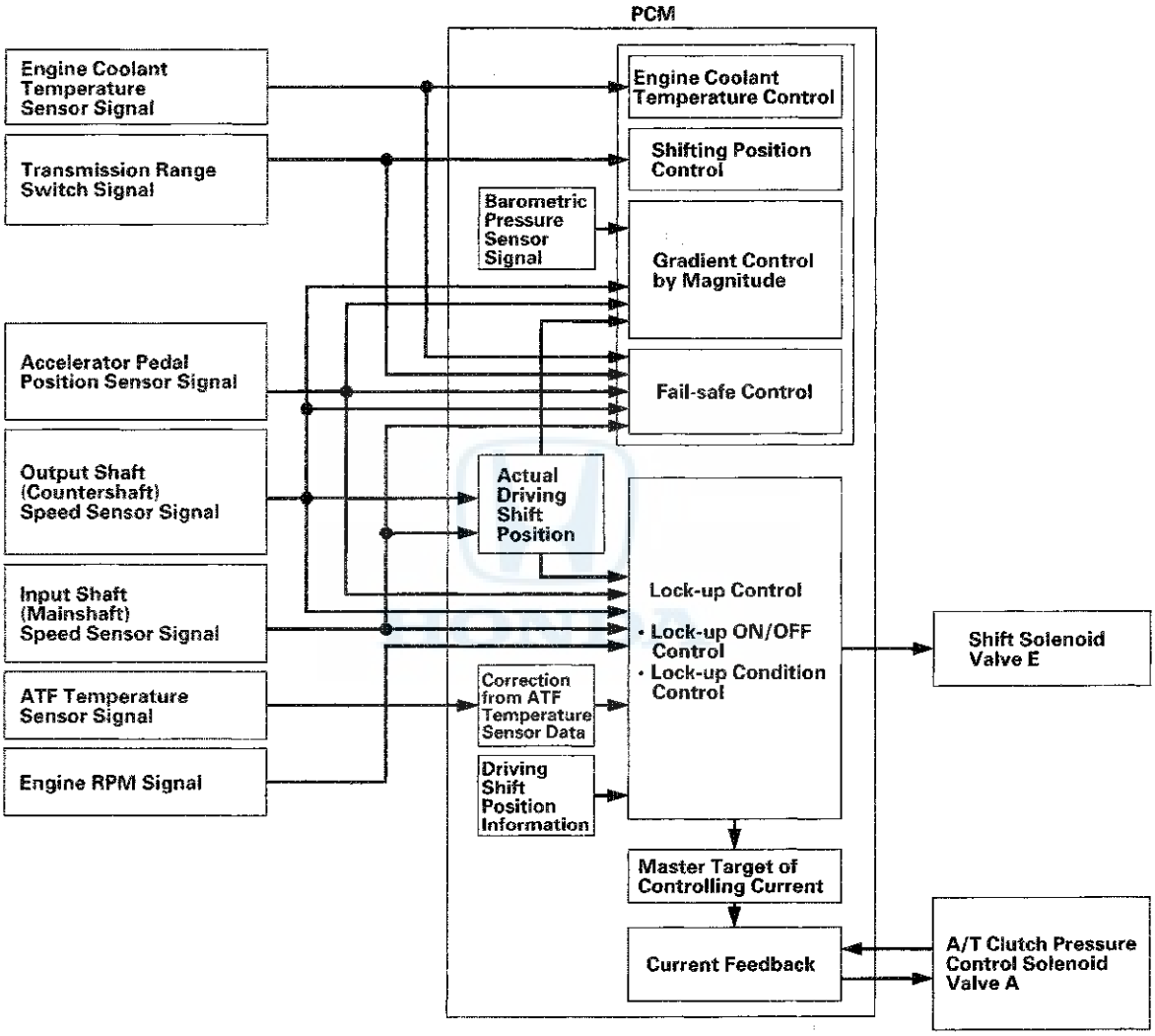

(cont'd)

System Description (cont'd)

Electronic Control System (cont'd)

Self-diagnosis
If the PCM detects the failure of a signal from a sensor, a switch, a solenoid valve, or from another control unit it stores a Temporary DTC or a DTC. Depending on the failure, a DTC is stored in either the first or the second drive cycle. When a DTC is stored, the PCM blinks the D indicator and/or turns on the malfunction indicator lamp (MIL) by a signal sent to the gauge control module via F-CAN.

- **One Drive Cycle Detection Method:**
  When an abnormality occurs in the signal from a sensor, a switch, a solenoid valve, or from another control unit, the PCM stores a DTC for the failure and blinks the D indicator and/or turns on the MIL immediately.

- **Two Drive Cycle Detection Method:**
  When an abnormality occurs in the signal from a sensor, a switch, a solenoid valve, or from another control unit in the first drive cycle, the PCM stores a Temporary DTC. The D indicator and the MIL do not turns on at this time. If the failure continues in the second drive cycle, the PCM stores a DTC and blinks the D indicator and/or turns on the MIL.

Fail-safe Function
When an abnormality occurs in the signal from a sensor, a switch, a solenoid valve, or from another control unit, the PCM ignores that signal and substitutes a pre-programmed value for them that allow the automatic transmission to continue driving. This causes a DTC to be stored and the D indicator to blink and/or the MIL to come on.

HONDA

PCM A/T Control System Electrical Connections

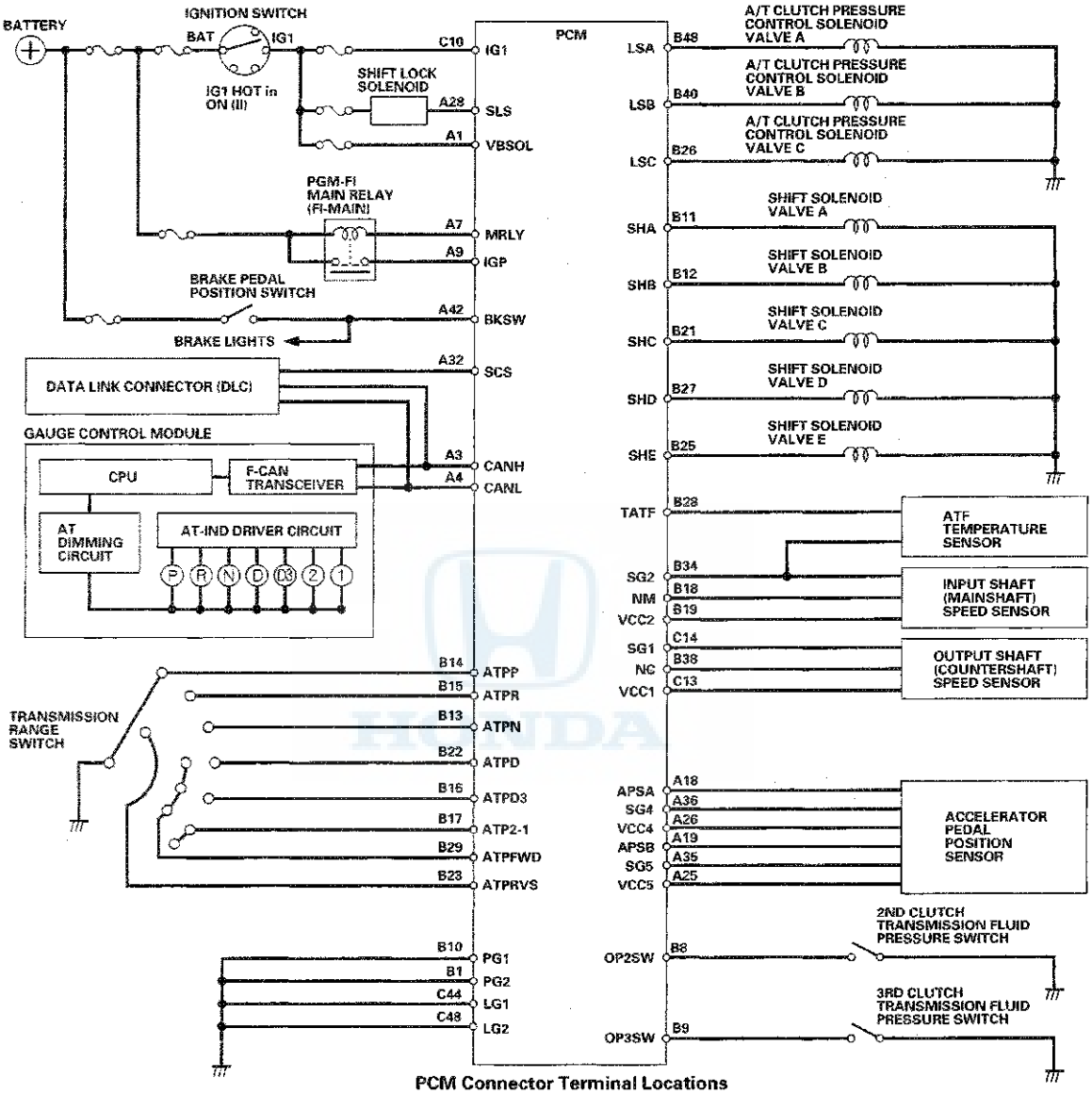

PCM Connector Terminal Locations

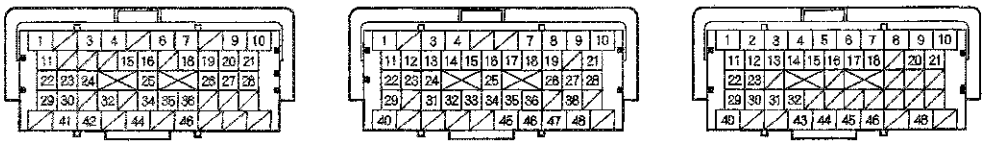

A □ (49P) B △ (49P) C ○ (49P)

Terminal side of female terminals

(cont'd)

System Description (cont'd)

Electronic Control System (cont'd)

PCM A/T Control System Inputs and Outputs

PCM Connector Terminal Locations

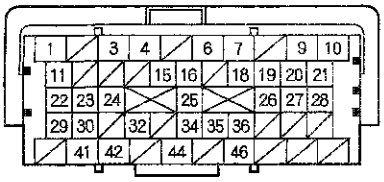

A □ (49P)

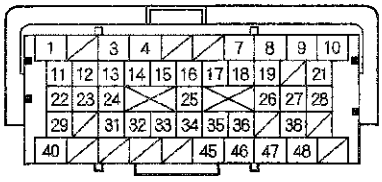

B △ (49P)

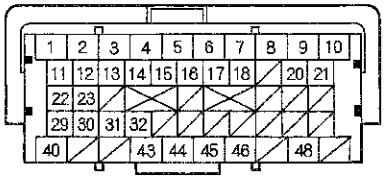

C ○ (49P)

Terminal side of female terminals

PCM CONNECTOR A □ (49P)

Terminal Number	Wire Color	Terminal Name	Description	Signal
A1	RED	VBSOL (POWER SOURCE FOR SOLENOID VALVES)	Power source for solenoid valves	With ignition switch ON (II): Battery voltage With ignition switch LOCK (0): About 0 V
A3	WHT	CANH (CAN COMMUNICATION SIGNAL HIGH)	Sends and receives communication signal	With ignition switch ON (II): Pulses (about 2.5 V)
A4	RED	CANL (CAN COMMUNICATION SIGNAL LOW)	Sends and receives communication signal	With ignition switch ON (II): Pulses (about 2.5V)
A7	RED/BLK	MRLY (PGM-FI MAIN RELAY 1)	Drives PGM-FI main relay 1 Power source for DTC memory	With ignition switch ON (II): About 0 V With ignition switch LOCK (0): Battery voltage
A9	YEL/BLK	IGP (POWER SOURCE)	Power source for PCM circuit	With ignition switch ON (II): Battery voltage With ignition switch LOCK (0): About 0 V
A18	YEL	APSA (ACCELERATOR PEDAL POSITION (APP) SENSOR A)	Detects APP sensor A signal	With ignition switch ON (II) and accelerator pedal fully pressed: About 4.8 V With ignition switch ON (II) and accelerator pedal released: About 1.0 V
A19	ORN	APSB (ACCELERATOR PEDAL POSITION (APP) SENSOR B)	Detects APP sensor B signal	With ignition switch ON (II) and accelerator pedal fully pressed: About 2.4 V With ignition switch ON (II) and accelerator pedal released: About 0.5 V
A25	BRN	VCC5 (SENSOR VOLTAGE)	Provides sensor reference voltage	With ignition switch ON (II): About 5.0 V With ignition switch LOCK (0): About 0 V
A26	RED	VCC4 (SENSOR VOLTAGE)	Provides sensor reference voltage	With ignition switch ON (II): About 5.0 V With ignition switch LOCK (0): About 0 V
A28	PNK	SLS (SHIFT LOCK SOLENOID)	Drives shift lock solenoid	With ignition switch ON (II), in P, brake pedal pressed, and accelerator pedal released: About 0 V
A32	ORN	SCS (SERVICE CHECK SIGNAL)	Detects service check signal	With the service check signal shorted using HDS: About 0 V With the service check signal opened: About 5.0 V
A35	GRN	SG5 (SENSOR GROUND)	Sensor ground	Less than 0.5 V at all times
A36	BLU	SG4 (SENSOR GROUND)	Sensor ground	Less than 0.5 V at all times
A42	LT GRN	BKSW (BRAKE PEDAL POSITION SWITCH)	Detects brake pedal position switch signal	With brake pedal released: About 0 V With brake pedal pressed: Battery voltage

PCM CONNECTOR B △ (49P)

Terminal Number	Wire Color	Terminal Name	Description	Signal
B1	BLK	PG2 (PCM GROUND)	Ground circuit for PCM	Less than 0.5 V at all times
B8	BLU/RED	OP2SW (2ND CLUTCH TRANSMISSION FLUID PRESSURE SWITCH)	Detects 2nd clutch transmission fluid pressure switch signal	With ignition switch ON (II): • Without 2nd clutch pressure: About 5.0 V • With 2nd clutch pressure: About 0 V
B9	BLU/WHT	OP3SW (3RD CLUTCH TRANSMISSION FLUID PRESSURE SWITCH)	Detects 3rd clutch transmission fluid pressure switch signal	With ignition switch ON (II): • Without 3rd clutch pressure: About 5.0 V • With 3rd clutch pressure: About 0 V
B10	BLK	PG1 (PCM GROUND)	Ground circuit for PCM	Less than 0.5 V at all times
B11	BLU/BLK	SHA (SHIFT SOLENOID VALVE A)	Drives shift solenoid valve A	With engine running in R, D (in 1st, 4th, and 5th gears), D3 (in 1st gear), and 1: Battery voltage With engine running in P, N, D and D3 (in 2nd and 3rd gears), and 2: About 0 V
B12	GRN/WHT	SHB (SHIFT SOLENOID VALVE B)	Drives shift solenoid valve B	With engine running in P, R, N, D and D3 (in 1st and 2nd gears), 2, and 1: Battery voltage With engine running in D (3rd, 4th, and 5th gears) and D3 (3rd gear): About 0 V
B13	RED/BLK	ATPN (TRANSMISSION RANGE SWITCH N)	Detects transmission range switch N position signal	In N: About 0 V In any position other than N: More than 5.0 V
B14	BLU/BLK	ATPP (TRANSMISSION RANGE SWITCH P)	Detects transmission range switch P position signal	In P: About 0 V In any position other than P: More than 5.0 V
B15	WHT	ATPR (TRANSMISSION RANGE SWITCH R)	Detects transmission range switch R position signal	In R: About 0 V In any position other than R: More than 5.0 V
B16	RED	ATPD3 (TRANSMISSION RANGE SWITCH D3)	Detects transmission range switch D3 position signal	In D3: About 0 V In any position other than D3: Battery voltage
B17	GRN/RED	ATP2-1 (TRANSMISSION RANGE SWITCH 2-1)	Detects transmission range switch 2 and 1 positions signal	In 2 and 1: About 0 V In any position other than 2 and 1: Battery voltage
B18	WHT/RED	NM (INPUT SHAFT (MAINSHAFT) SPEED SENSOR)	Detects input shaft (mainshaft) speed sensor signal	With ignition switch ON (II): About 0 V or about 5.0 V With engine running in N: About 2.5 V (pulses)
B19	YEL/BLU	VCC2 (SENSOR VOLTAGE)	Provides sensor voltage	With ignition switch ON (II): About 5.0 V With ignition switch LOCK (0): About 0 V

HONDA

(cont'd)

System Description (cont'd)

Electronic Control System (cont'd)

PCM A/T Control System Inputs and Outputs (cont'd)

PCM Connector Terminal Locations

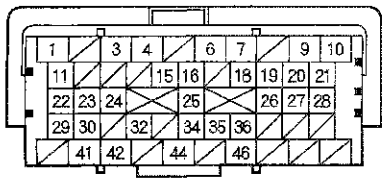

A □ (49P)

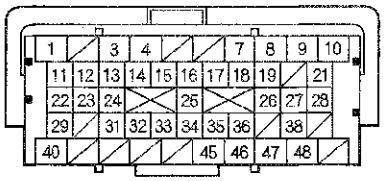

B △ (49P)

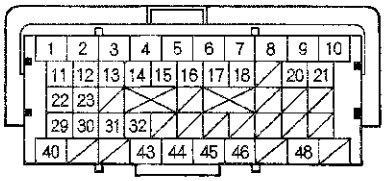

C ○ (49P)

Terminal side of female terminals

PCM CONNECTOR B △ (49P)

Terminal Number	Wire Color	Terminal Name	Description	Signal
B21	GRN	SHC (SHIFT SOLENOID VALVE C)	Drives shift solenoid valve C	With engine running in N, D (in 1st, 3rd, and 5th gears), D3 (in 1st and 3rd gears), and 1: Battery voltage With engine running in P, R, D (in 2nd and 4th gears), D3 (in 2nd gear), and 2: About 0 V
B22	YEL/GRN	ATPD (TRANSMISSION RANGE SWITCH D)	Detects transmission range switch D position signal	In D: About 0 V In any position other than D: Battery voltage
B23	RED/WHT	ATPRVS (TRANSMISSION RANGE SWITCH RVS)	Detects transmission range switch R position signal	In R: About 0 V In any position other than R: Battery voltage
B25	YEL	SHE (SHIFT SOLENOID VALVE E)	Drives shift solenoid valve E	With engine running in P and R: Battery voltage With engine running in N, D and D3 (in 1st gear), 2, and 1: About 0 V
B26	BLU/YEL	LSC (A/T CLUTCH PRESSURE CONTROL SOLENOID VALVE C)	Drives A/T clutch pressure control solenoid valve C	With ignition switch ON (II): Current controlled
B27	GRN/RED	SHD (SHIFT SOLENOID VALVE D)	Drives shift solenoid valve D	With engine running in D (in 2nd and 5th gears), D3 (in 2nd gear), and 2: Battery voltage With engine running in P, R, N, D (in 1st, 3rd, and 4th gears), and D3 (in 1st and 3rd gears): About 0 V
B28	RED/YEL	TATF (ATF TEMPERATURE SENSOR)	Detects ATF temperature sensor signal	With ignition switch ON (II): About 0.2—4.8 V depending on ATF temperature With ignition switch LOCK (0): About 0 V
B29	BLU/YEL	ATPFWD (TRANSMISSION RANGE SWITCH FWD)	Detects transmission range switch D, D3, and 2 positions signal	In D, D3, and 2: About 0 V In any position other than D, D3, and 2: Battery voltage
B34	GRN/BLK	SG2 (SENSOR GROUND)	Sensor ground	Less than 0.5 V at all times
B38	BLK/WHT	NC (OUTPUT SHAFT (COUNTERSHAFT) SPEED SENSOR)	Detects output shaft (countershaft) speed sensor signal	With ignition switch ON (II): About 0 V or about 5.0 V With driving: About 2.5 V (pulses)
B40	BRN	LSB (A/T CLUTCH PRESSURE CONTROL SOLENOID VALVE B)	Drives A/T clutch pressure control solenoid valve B	With ignition switch ON (II): Current controlled
B48	RED/BLK	LSA (A/T CLUTCH PRESSURE CONTROL SOLENOID VALVE A)	Drives A/T clutch pressure control solenoid valve A	With ignition switch ON (II): Current controlled

PCM CONNECTOR C ◯ (49P)

Terminal Number	Wire Color	Terminal Name	Description	Signal
C10	BLK/RED	IG1 (IGNITION SIGNAL)	Detects ignition switch signal	With ignition switch ON (II): Battery voltage With ignition switch LOCK (0): About 0 V
C13	YEL/RED	VCC1 (SENSOR VOLTAGE)	Provides sensor voltage	With ignition switch ON (II): About 5.0 V With ignition switch LOCK (0): About 0 V
C14	GRN/WHT	SG1 (SENSOR GROUND)	Sensor ground	Less than 0.5 V at all times
C44	BRN/YEL	LG1 (LOGIC GROUND)	Ground circuit for PCM	Less than 0.5 V at all times
C48	BRN/YEL	LG2 (LOGIC GROUND)	Ground circuit for PCM	Less than 0.5 V at all times

HONDA

System Description (cont'd)

Hydraulic Controls

Valve Bodies

The valve body includes the main valve body, the regulator valve body, and the servo body. The ATF pump is driven by splines on the end of the torque converter which is attached to the engine. Fluid flows through the regulator valve to maintain specified pressure through the main valve body to the manual valve, directing pressure to the shift valves and to each of the clutches via the solenoid valves. Shift solenoid valves A, B, C, D, and E are bolted on the servo body. A/T clutch pressure control solenoid valves A, B, and C are mounted on the outside of the transmission housing.

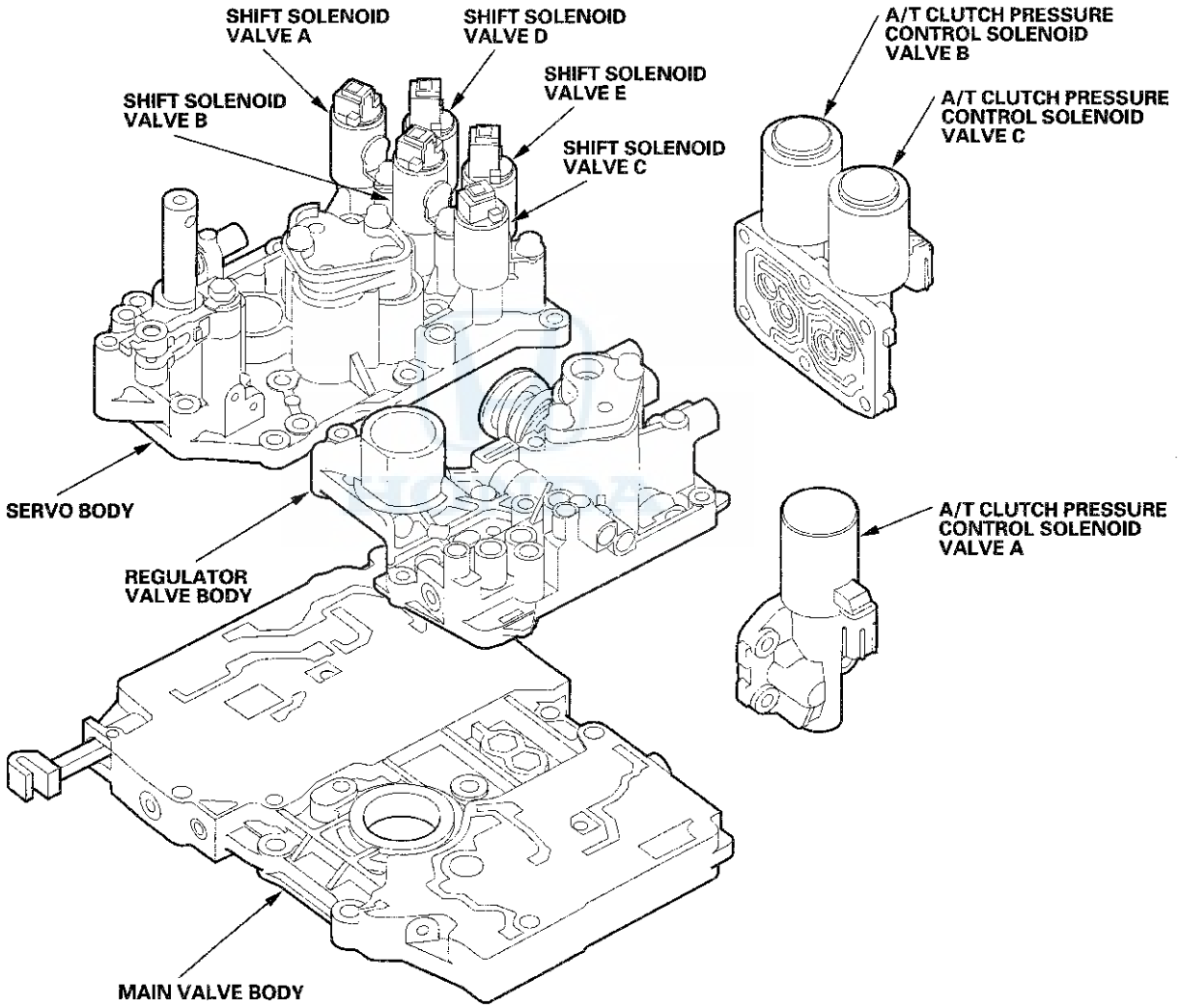

Main Valve Body
The main valve body contains the manual valve, shift valves A, B, C, and E, the relief valve, the lock-up control valve, the cooler check valve, the servo control valve, and the ATF pump gears. The primary function of the main valve body is to switch fluid pressure on and off and to control hydraulic pressure going to the hydraulic control system.

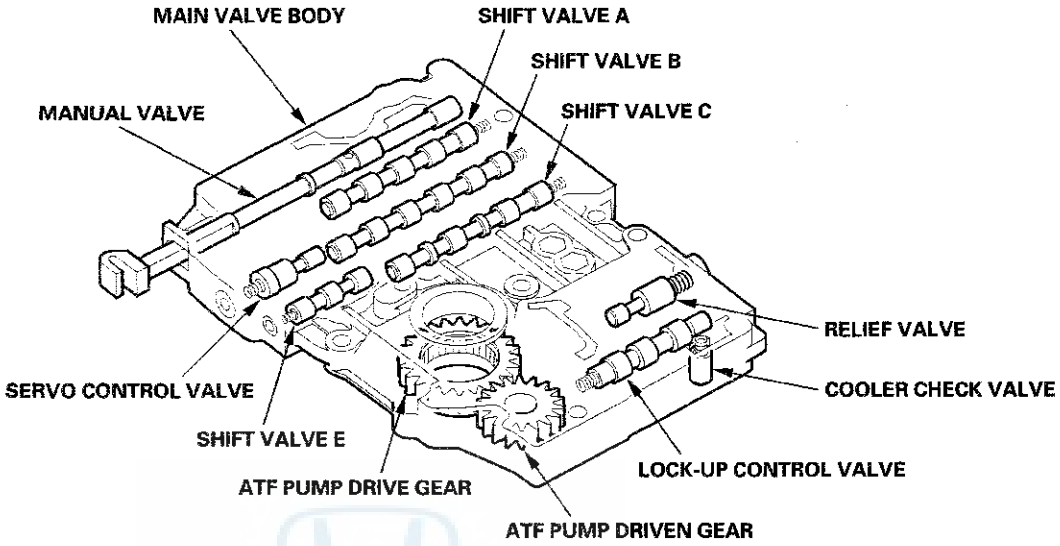

Regulator Valve Body
The regulator valve body contains the regulator valve, the torque converter check valve, the lock-up shift valve, and the 1st and 3rd accumulators.

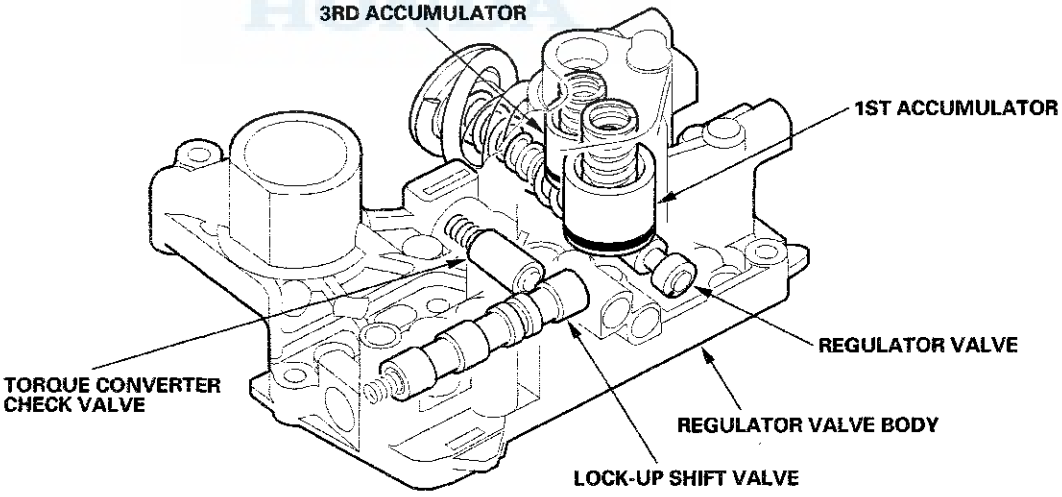

(cont'd)

System Description (cont'd)

Hydraulic Controls (cont'd)

Regulator Valve

The regulator valve maintains constant hydraulic pressure from the ATF pump to the hydraulic control system, while also providing fluid to the lubrication system and the torque converter. The fluid from the ATF pump flows through B and C. Fluid entering from B flows through the valve orifice to the A cavity. This pressure in the A cavity pushes the regulator valve toward the valve spring side, and this movement of the regulator valve uncovers the fluid port to the torque converter and the relief valve. The fluid flows out to the torque converter and the relief valve, and the regulator valve returns under spring force. According to the level of the hydraulic pressure through B, the position of the regulator valve changes, and the amount of fluid from C through torque converter also changes. This operation is continuous, maintaining the line pressure.

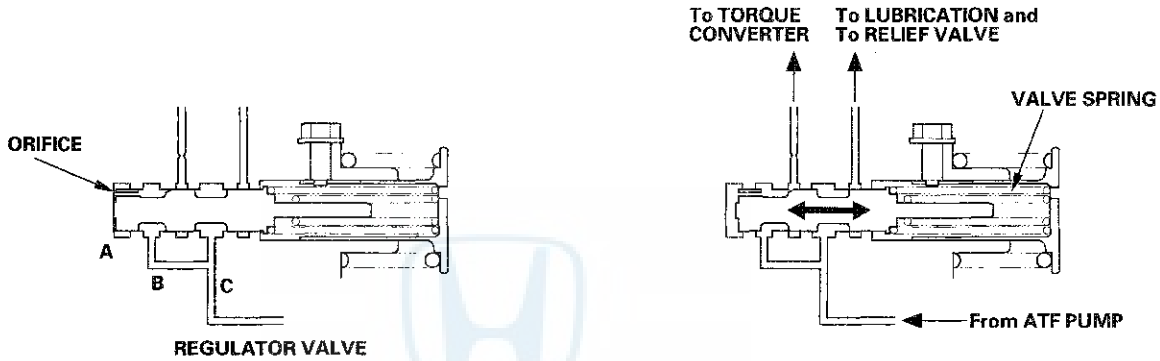

Increases in hydraulic pressure according to torque are regulated by the regulator valve using stator torque reaction. The stator shaft is splined with the stator in the torque converter, and the stator shaft arm end contacts the regulator spring cap. When the vehicle is accelerating or climbing (torque converter range), stator torque reaction acts on the stator shaft, and the stator shaft arm pushes the regulator spring cap in the direction of the arrow in proportion to the reaction. The stator reaction spring compresses, and the regulator valve moves to increase the line pressure which is regulated by the regulator valve. The line pressure reaches its maximum when the stator torque reaction reaches its maximum.

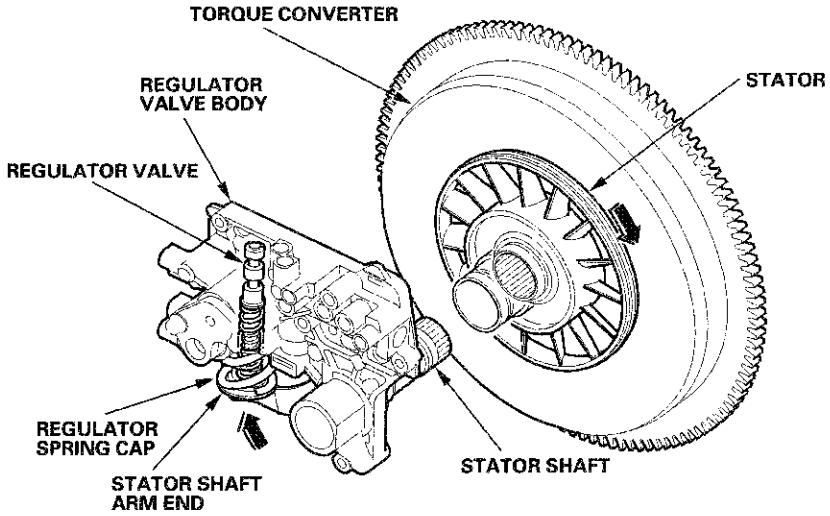

Servo Body

The servo body contains the servo valve, shift valve D, the accumulators for 2nd, 4th, and 5th, and shift solenoid valves A, B, C, D, and E.

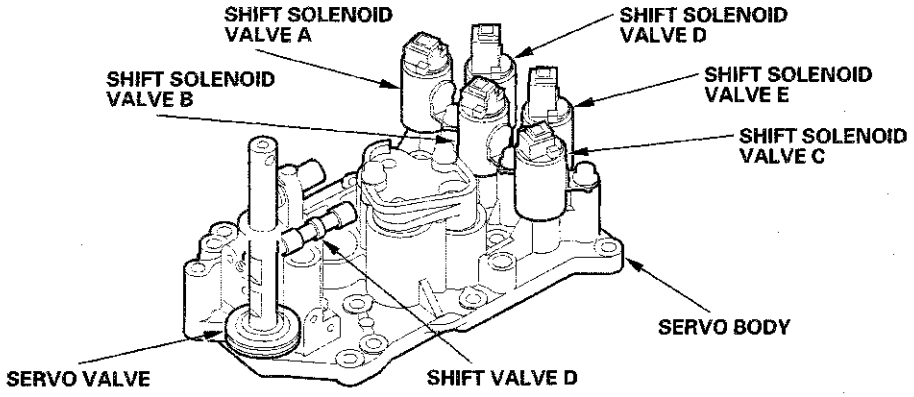

Accumulator

The accumulators are located in the regulator valve body and the servo body. The regulator valve body contains the 1st and 3rd accumulators, and the servo body contains the 2nd, 4th, and 5th accumulators.

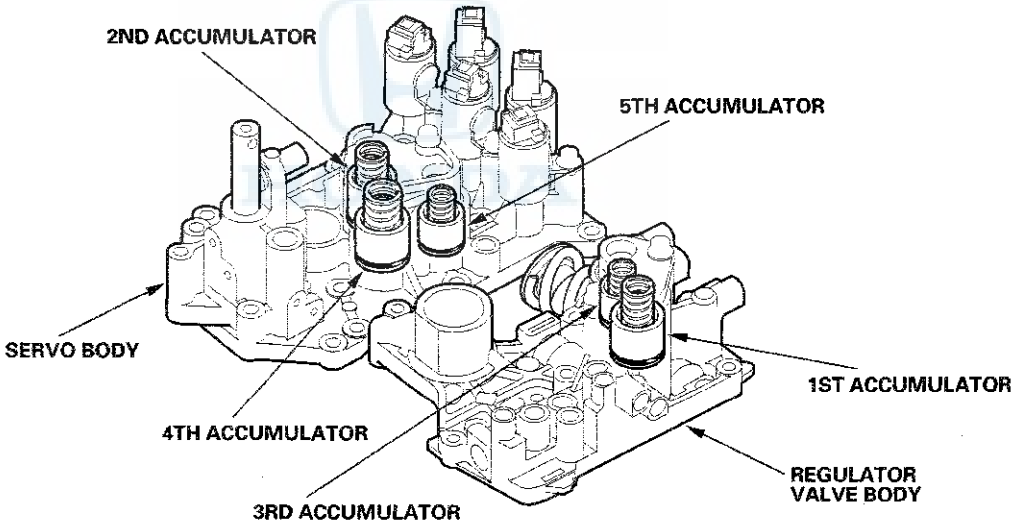

System Description (cont'd)

Hydraulic Flow

Distribution of Hydraulic Pressure

As the engine turns, the ATF pump starts to operate. Automatic transmission fluid (ATF) is drawn through the ATF strainer (filter) and discharged into the hydraulic circuit. Then, ATF flowing from the ATF pump becomes line pressure that is regulated by the regulator valve. Torque converter pressure from the regulator valve enters the torque converter through the lock-up shift valve, and it is discharged from the torque converter. The torque converter check valve prevents torque converter pressure from rising.

The PCM turns the shift solenoid valves ON and OFF. The shift solenoid valve intercepts line pressure from the ATF pump via the manual valve when the shift solenoid valve is OFF. When the shift solenoid valve is turned ON by the PCM, line pressure changes to shift solenoid valve pressure at the shift solenoid valve, then the shift solenoid valve pressure flows to the shift valve. Applying shift solenoid pressure to the shift valves moves the position of the shift valve, and switches the port of the hydraulic circuit. The PCM also controls A/T clutch pressure control solenoid valves A, B, and C. The A/T clutch pressure control solenoid valves regulate hydraulic pressure, and applies the pressure to the clutches to engage smoothly. The clutches receive optimum clutch pressure which is regulated by the A/T clutch pressure control solenoid valves for comfortable driving and shifting under all conditions.

Hydraulic pressure at the port for use in the hydraulic circuit

Port No.	Hydraulic Pressure	Port No.	Hydraulic Pressure
1	Line	SB	Shift solenoid valve B
3	Line	SC	Shift solenoid valve C
3'	Line	SD	Shift solenoid valve D
4	Line	SE	Shift solenoid valve E
4'	Line	10	1st clutch
4"	Line	20	2nd clutch
7	Line	30	3rd clutch
1A	Line or A/T clutch pressure control solenoid valve A	40	4th clutch
1B	Line	50	5th clutch
3A	Line	55	A/T clutch pressure control solenoid valve A
3B	Line	55'	A/T clutch pressure control solenoid valve A
3C	Line	56	A/T clutch pressure control solenoid valve B
5A	Line	57	A/T clutch pressure control solenoid valve C
5B	Line	90	Torque converter
5C	Line	91	Torque converter
5D	Line	92	Torque converter
5E	Line or A/T clutch pressure control solenoid valve B	93	ATF cooler
5F	Line or A/T clutch pressure control solenoid valve A or B	94	Torque converter
5G	A/T clutch pressure control solenoid valve B	95	Lubrication
5H	A/T clutch pressure control solenoid valve C	96	Torque converter
5J	A/T clutch pressure control solenoid valve C	97	Torque converter
5K	A/T clutch pressure control solenoid valve C	99	Suction
5L	A/T clutch pressure control solenoid valve C	X	Drain
5N	A/T clutch pressure control solenoid valve C	HX	High position drain
SA	Shift solenoid valve A	AX	Air drain

N Position

The PCM controls the shift solenoid valves. The conditions of the shift solenoid valves and the positions of the shift valves are as follows:

- Shift solenoid valve A: OFF, and shift valve A remains on the right side
- Shift solenoid valve B: ON, and shift valve B moves to the left side
- Shift solenoid valve C: ON, and shift valve C moves to the left side
- Shift solenoid valve D: OFF, and shift valve D remains on the left side
- Shift solenoid valve E: OFF, and shift valve E remains on the left side

Line pressure (1) flows to the shift solenoid valves and A/T clutch pressure control solenoid valve A. Under this condition, hydraulic pressure is not applied to the clutches.

NOTE: When used, "left" or "right" indicates direction on the hydraulic circuit.

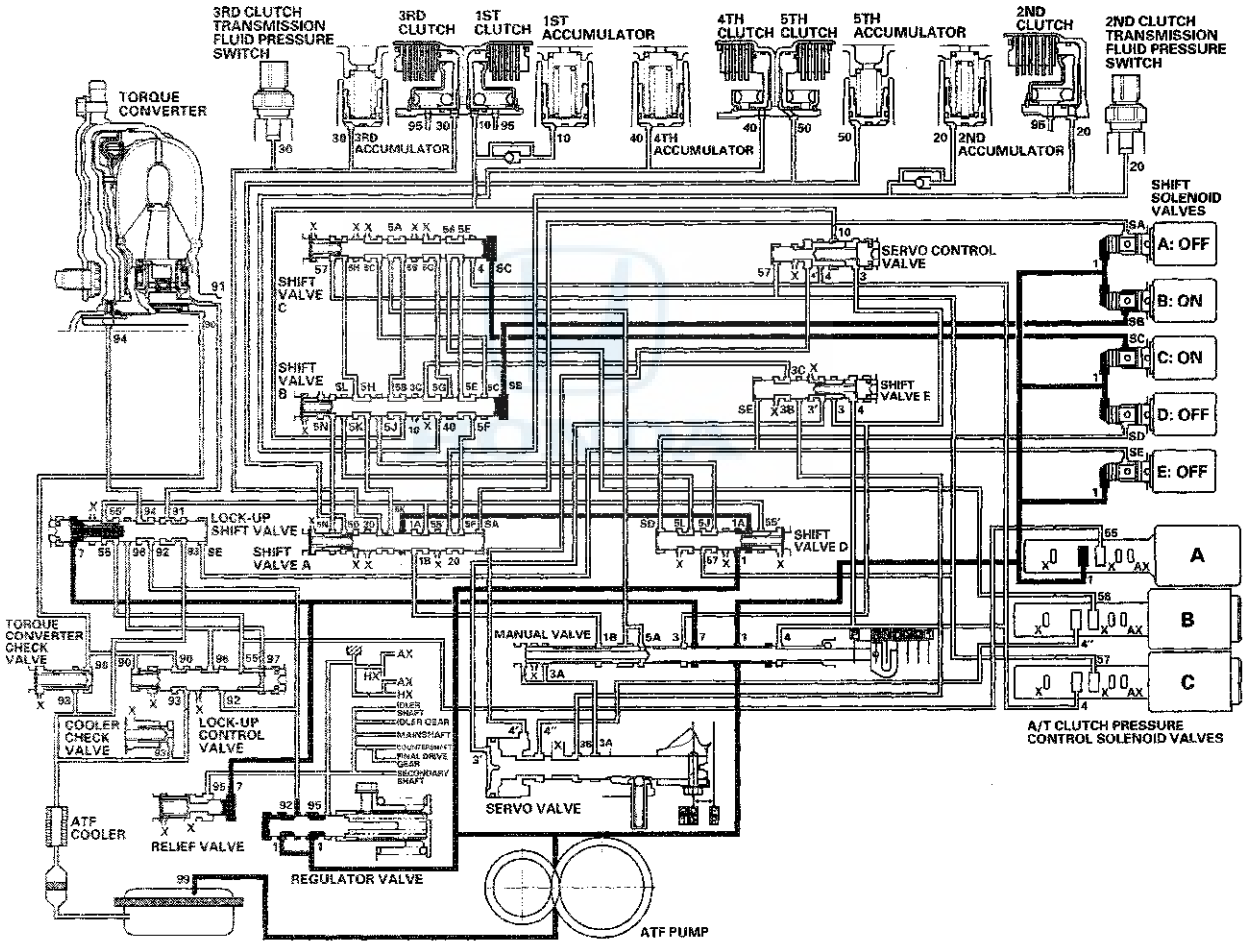

(cont'd)

System Description (cont'd)

Hydraulic Flow (cont'd)

D Position: 1st gear shifting from N position
The shift solenoid valves remain the same as in N when shifting to D from N. The manual valve is moved to D, and uncovers the line pressure port (4) leading to A/T clutch pressure control solenoid valve C. Hydraulic pressure to the 1st clutch from A/T clutch pressure control solenoid valve A is created as shift solenoid valve A is OFF, B and C remain ON. A/T clutch pressure control solenoid valve A pressure (55) changes to 1st clutch pressure (10) at shift valve B, and flows to the 1st clutch. The 1st clutch is engaged gently when shifting to D from N.

NOTE: When used, "left" or "right" indicates direction on the hydraulic circuit.

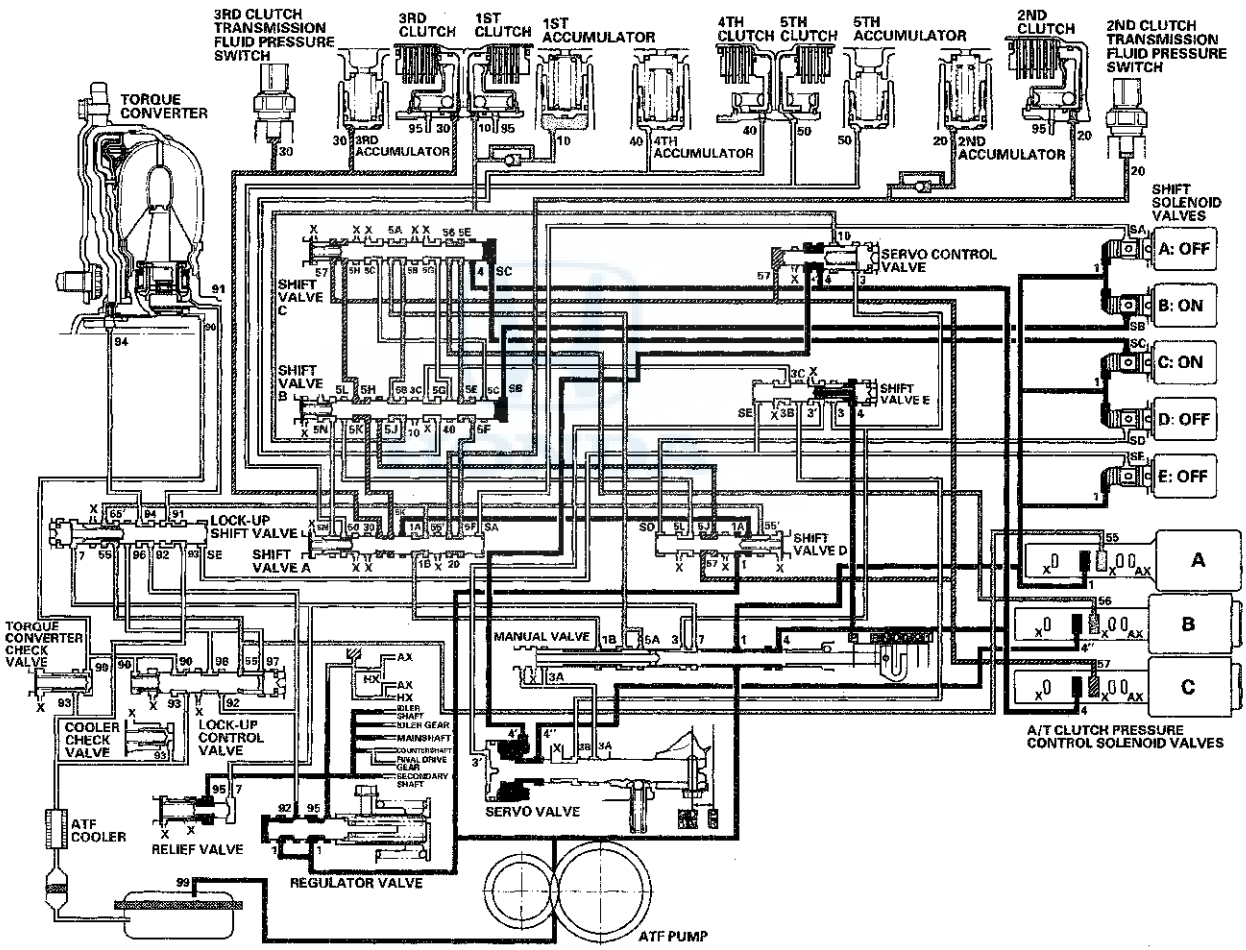

D Position: Driving in 1st gear

The PCM turns shift solenoid valve A ON, B and C remain ON, and D and E remain OFF. Shift solenoid valve A pressure (SA) is applied to the right side of shift valve A. Shift valve A is moved to the left side to uncover the line pressure port leading to the 1st clutch, and to cover the A/T clutch pressure control solenoid valve pressure port.

Fluid flows to the 1st clutch by way of:
Line pressure (1) → Shift valve D—Line pressure (1A) → Shift valve A—Line pressure (1B) → Manual valve—Line pressure (5A) → Shift valve C—Line pressure (5B) → Shift valve B—1st clutch pressure (10) → 1st clutch

1st clutch pressure (10) is applied to the 1st clutch, and the 1st clutch is engaged securely.

NOTE: When used, "left" or "right" indicates direction on the hydraulic circuit.

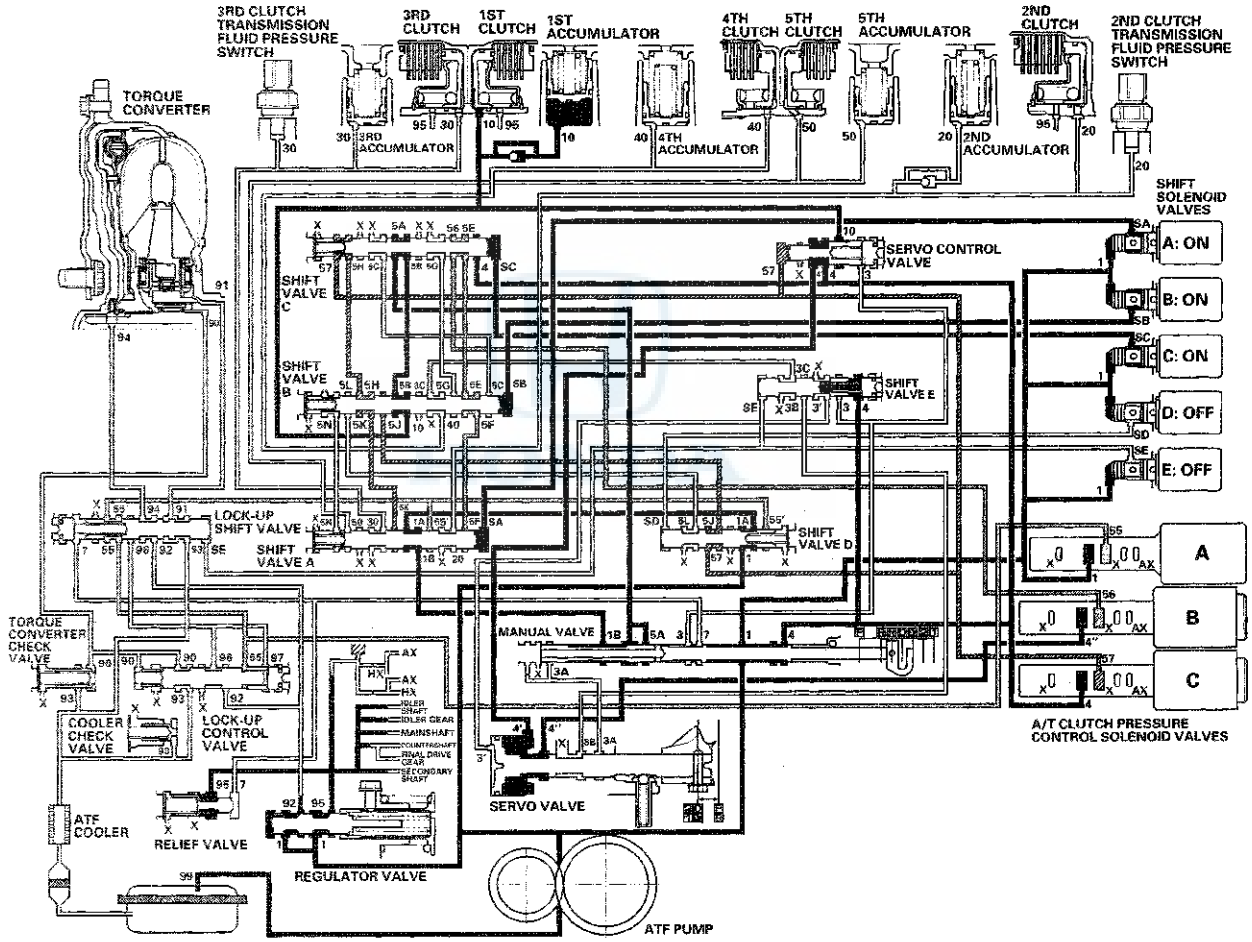

(cont'd)

System Description (cont'd)

Hydraulic Flow (cont'd)

D Position: Shifting between 1st gear and 2nd gear
As the speed of the vehicle reaches the programmed value, the PCM turns shift solenoid valve A OFF, B and C remain ON, and D and E remain OFF. Shift solenoid valve A pressure (SA) in the right side of shift valve A is released. Shift valve A moves to the right side uncovering the A/T clutch pressure control solenoid valve pressure port leading to the 1st and 2nd clutches. The PCM controls the A/T clutch pressure control solenoid valves to regulate hydraulic pressure. A/T clutch pressure control solenoid valve A pressure (55) changes to 1st clutch pressure (10) at shift valve B, and A/T clutch pressure control solenoid valve B pressure (56) changes to 2nd clutch pressure (20) at shift valve A. The 1st and 2nd clutches are engaged gently.

NOTE: When used, "left" or "right" indicates direction on the hydraulic circuit.

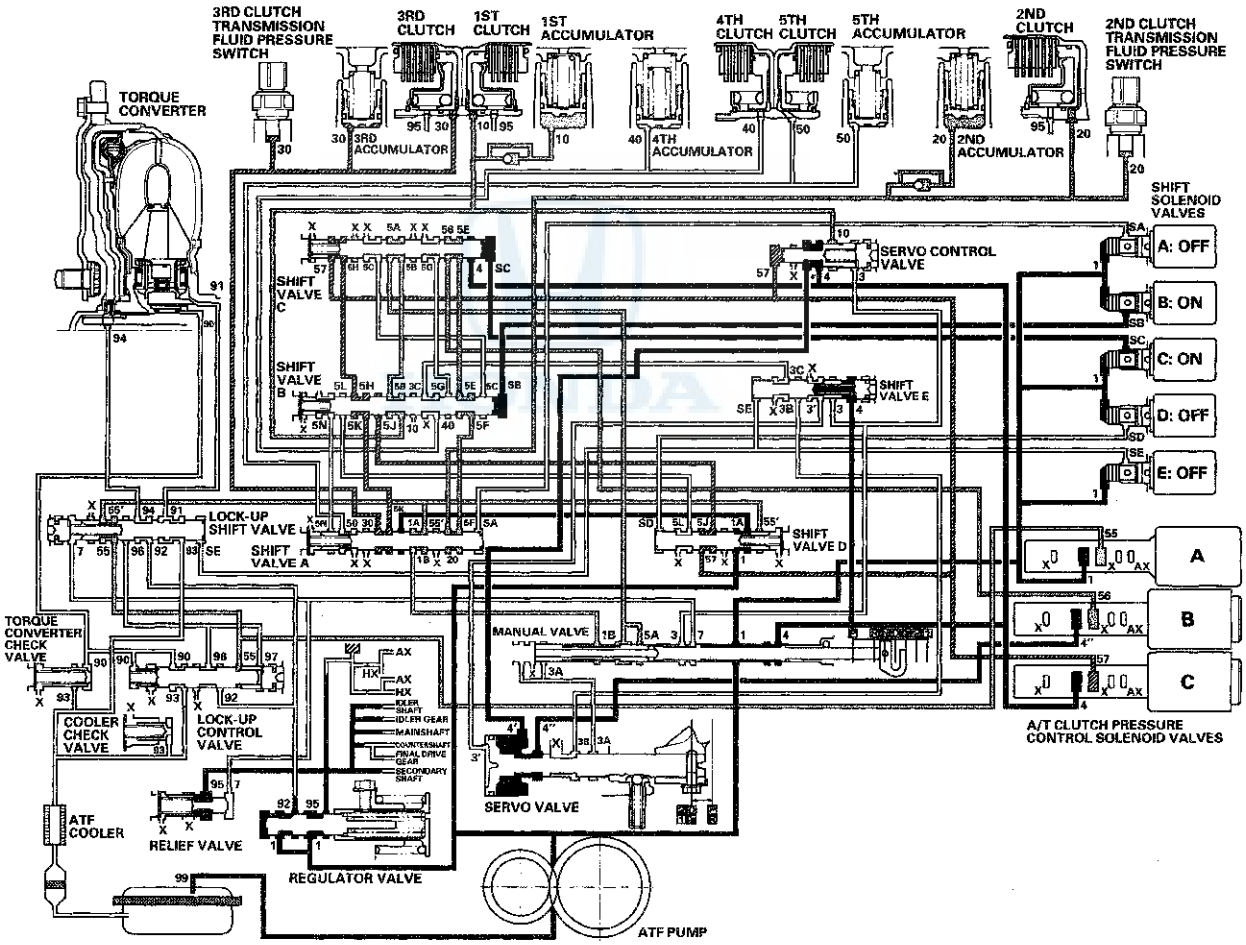

D Position: Driving in 2nd gear

The PCM turns shift solenoid valves C OFF, D ON, A and E remain OFF, and B remains ON. Shift solenoid valve C pressure (SC) in the right side of shift valve C is released. Shift valve C moves to the right side to switch the ports. This movement covers the ports to block the A/T clutch pressure control solenoid valve pressure at shift valves C and A, and uncover the line pressure port leading to the 2nd clutch.

Fluid flows to 2nd clutch by way of:
Line pressure (1) → Manual valve—Line pressure (4) → Shift valve C—Line pressure (5E) → Shift valve B—Line pressure (5F) → Shift valve A—2nd clutch pressure (20) → 2nd clutch

2nd clutch pressure (20) is applied to the 2nd clutch, and the 2nd clutch is engaged securely.

NOTE: When used, "left" or "right" indicates direction on the hydraulic circuit.

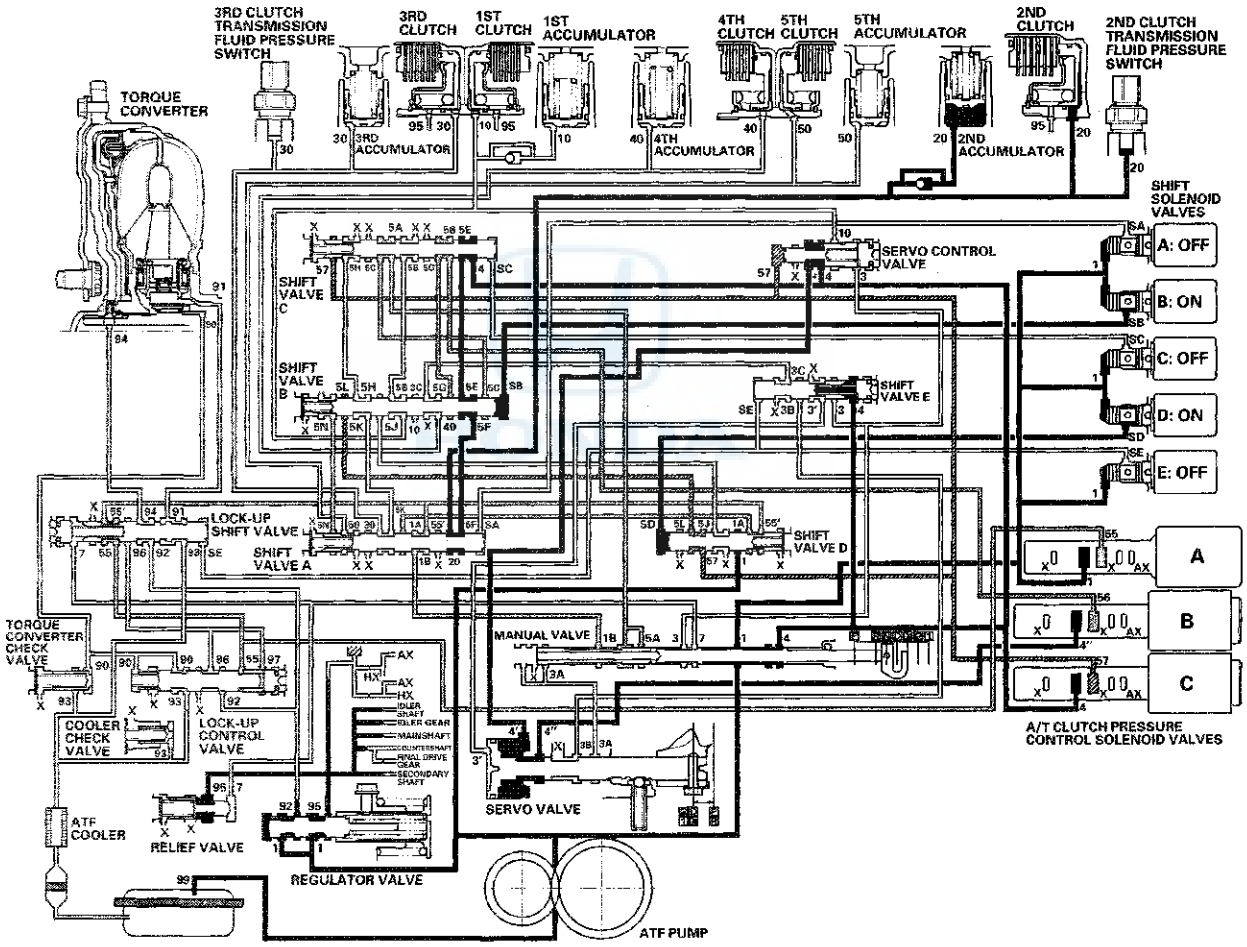

(cont'd)

System Description (cont'd)

Hydraulic Flow (cont'd)

D Position: Shifting between 2nd gear and 3rd gear
As the speed of the vehicle reaches the programmed value, the PCM turns shift solenoid valve C ON, A and E remain OFF, and B and D remain ON. Shift solenoid valve C pressure (SC) is applied to the right side of shift valve C. Shift valve C moves to the left side uncovering the A/T clutch pressure control solenoid valve pressure ports leading to the 2nd and 3rd clutches. The PCM controls the A/T clutch pressure control solenoid valves to regulate hydraulic pressure. A/T clutch pressure control solenoid valve B pressure (56) changes to 2nd clutch pressure (20) at shift valve A, and A/T clutch pressure control solenoid valve C pressure (57) changes to 3rd clutch pressure (30) at shift valve A. The 2nd and 3rd clutches are engaged gently.

NOTE: When used, "left" or "right" indicates direction on the hydraulic circuit.

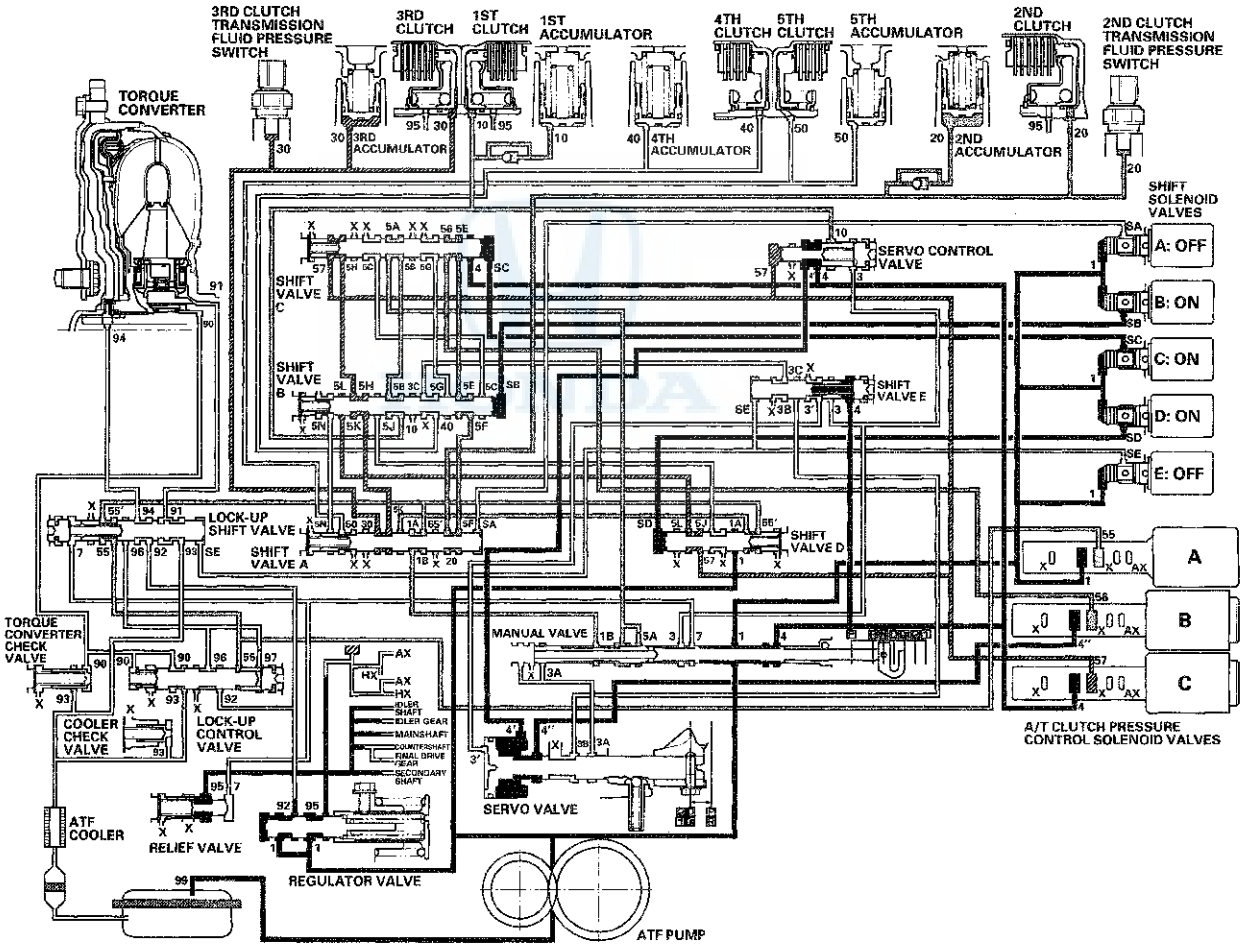

D Position: Driving in 3rd gear

The PCM turns shift solenoid valves B and D OFF, A and E remain OFF, and C remains ON. Shift solenoid valve B pressure (SB) in the right side of shift valve B is released, and shift valve B moves to the right side. Shift solenoid valve D pressure (SD) in the left side of shift valve D is released, and shift valve D is moved to the left side. This valve movement causes A/T clutch pressure control solenoid valve C pressure to be directed to the port leading to the 3rd clutch.

A/T clutch pressure control solenoid valve C pressure (57) changes to (5J) at shift solenoid valve D and to (5K) at shift valve B, and becomes 3rd clutch pressure (30) at shift valve A. 3rd clutch pressure (30) is applied to the 3rd clutch, and the 3rd clutch is engaged securely.

NOTE: When used, "left" or "right" indicates direction on the hydraulic circuit.

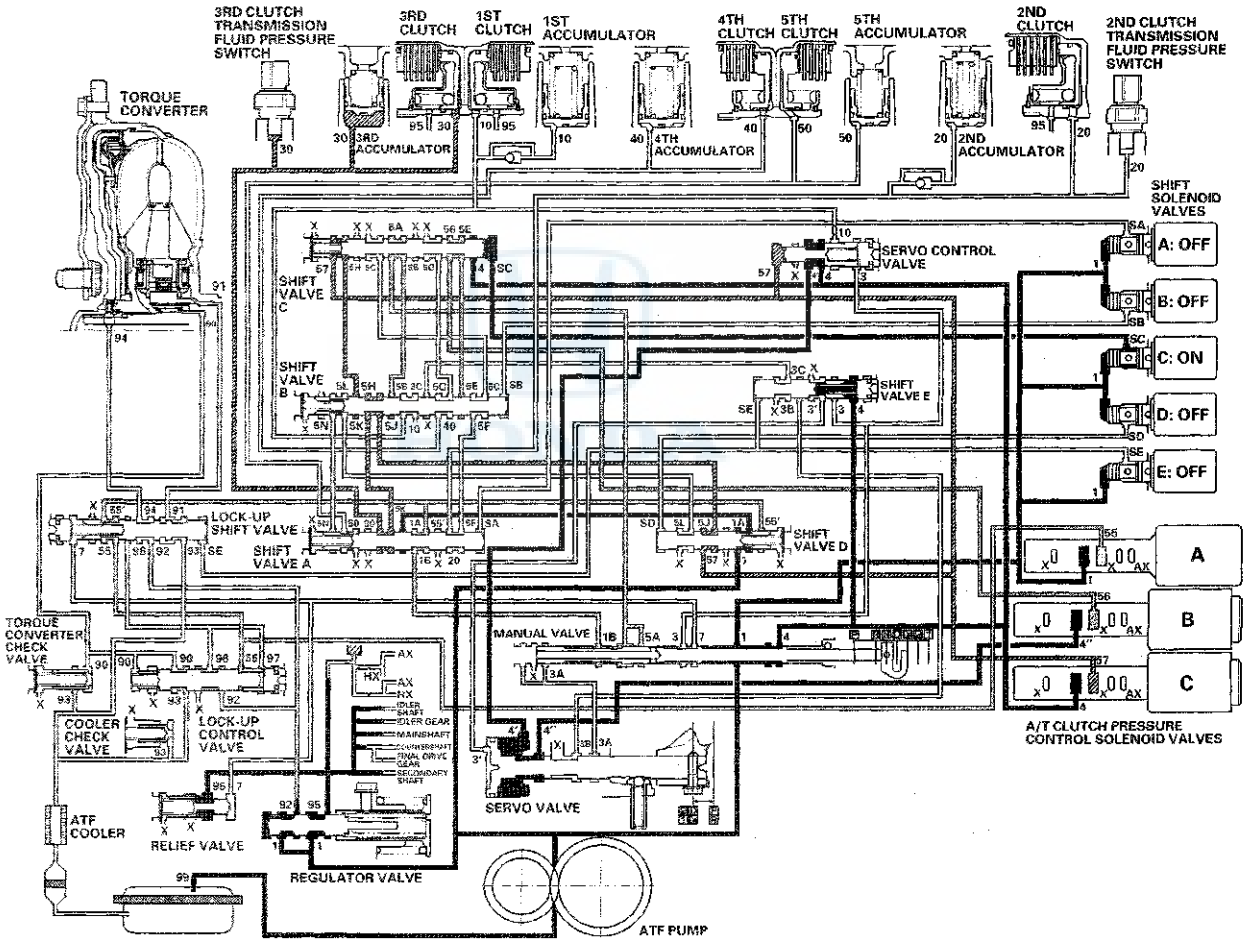

(cont'd)

System Description (cont'd)

Hydraulic Flow (cont'd)

D Position: Shifting between 3rd gear and 4th gear

As the speed of the vehicle reaches the programmed value, the PCM turns shift solenoid valve C OFF, and A, B, D, and E remain OFF. Shift solenoid valve C pressure (SC) in the right side of shift valve C is released. Shift valve C is moved to the right side uncovering the A/T clutch pressure control solenoid valve B and C pressure ports leading to the 3rd and 4th clutches. The PCM controls the A/T clutch pressure control solenoid valves to regulate hydraulic pressure. A/T clutch pressure control solenoid valve C pressure (57) changes to 3rd clutch pressure (30) at shift valve A, and A/T clutch pressure control solenoid valve B pressure (56) changes to 4th clutch pressure (40) at shift valve B. The 3rd and 4th clutches are engaged gently.

NOTE: When used, "left" or "right" indicates direction on the hydraulic circuit.

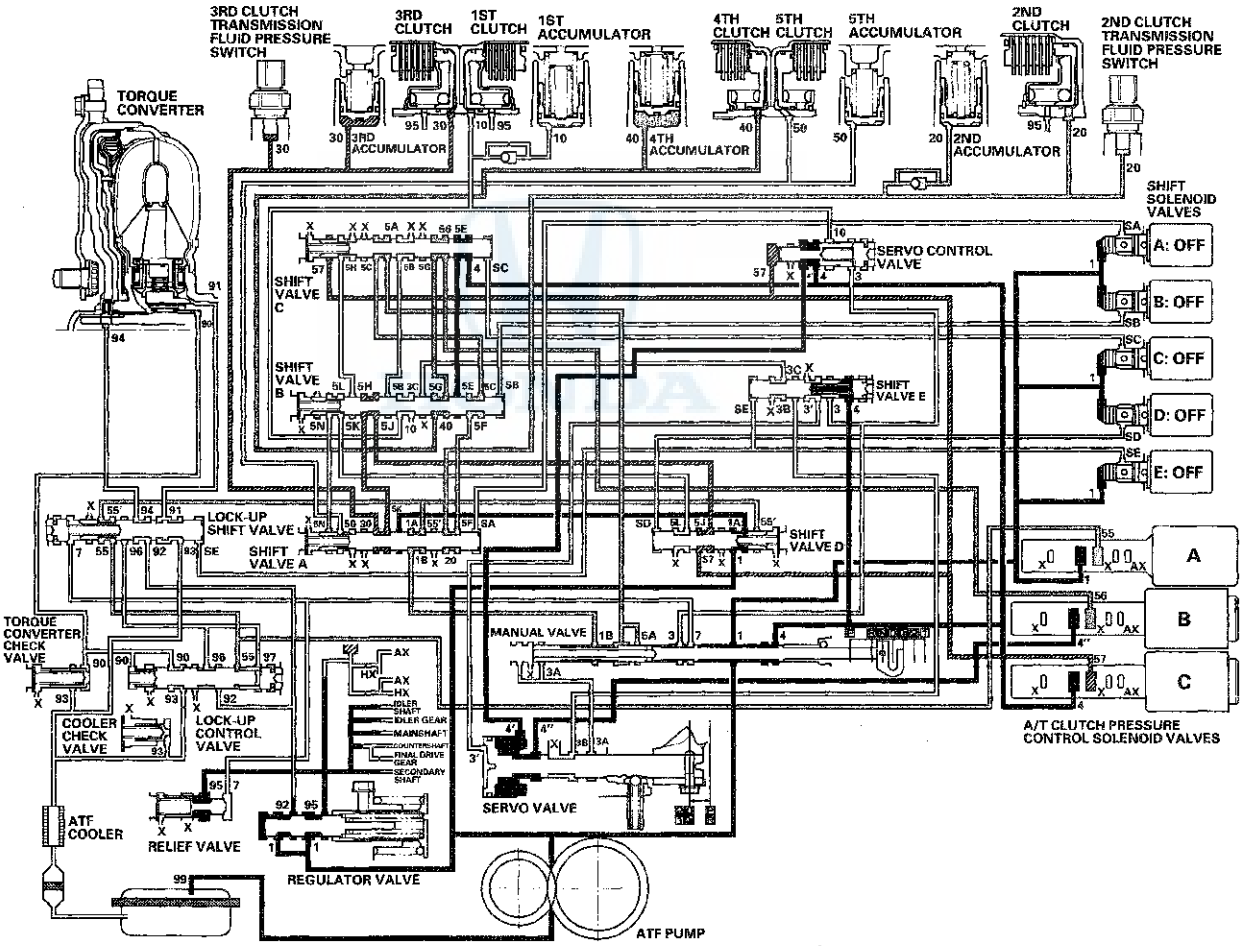

D Position: Driving in 4th gear

The PCM turns shift solenoid valve A ON, and B, C, D, and E remain OFF. Shift solenoid valve A pressure (SA) is applied to the right side of shift valve A. Shift valve A is moved to the left side to cover the A/T clutch pressure control solenoid valve A and C pressure ports leading to the 2nd and 3rd clutches.

A/T clutch pressure control solenoid valve B pressure (56) changes to (5G) at shift valve C, and becomes 4th clutch pressure (40) at shift valve B. 4th clutch pressure (40) is held high by A/T clutch pressure control solenoid valve B, and the 4th clutch is engaged securely.

NOTE: When used, "left" or "right" indicates direction on the hydraulic circuit.

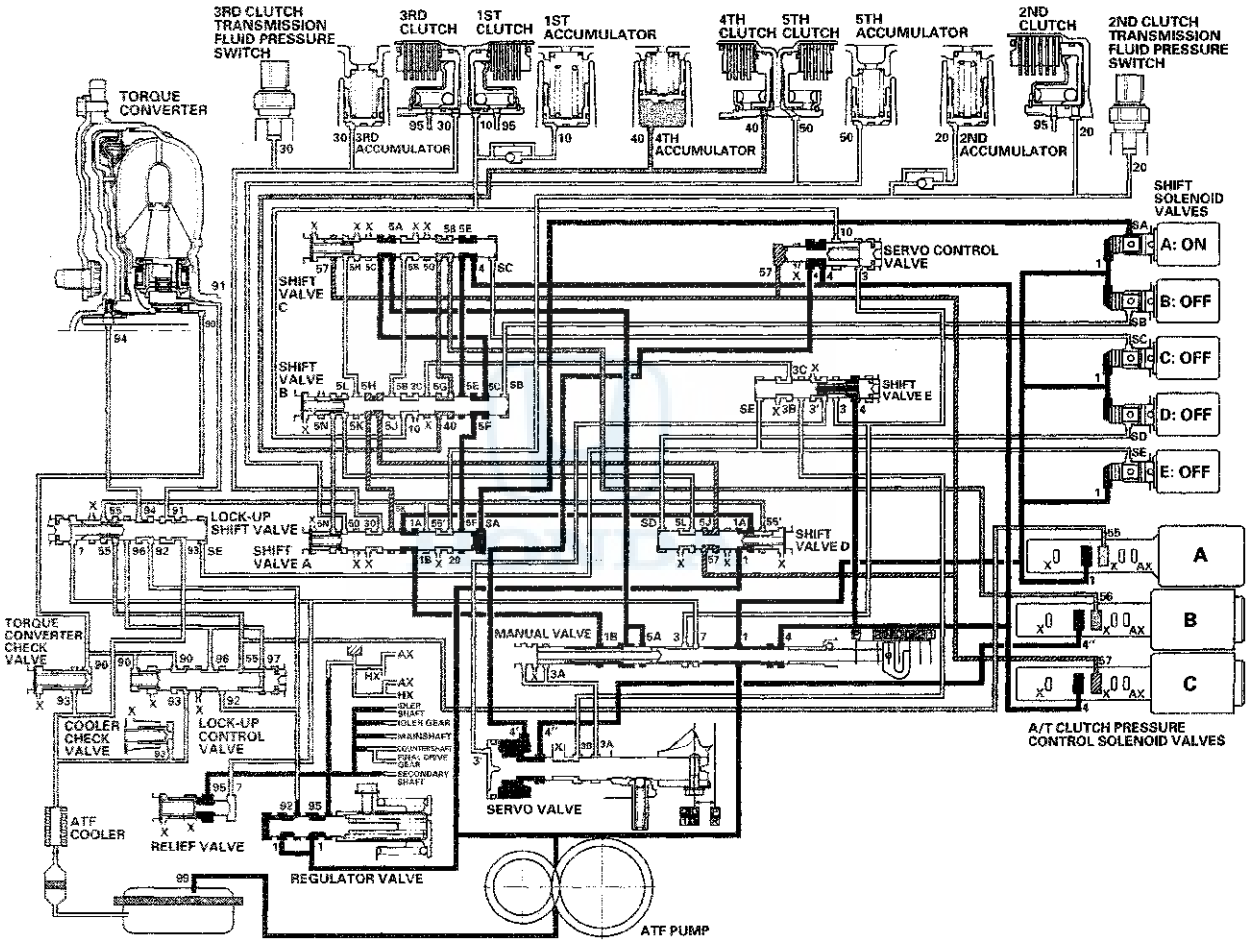

(cont'd)

System Description (cont'd)

Hydraulic Flow (cont'd)

D Position: Shifting between 4th gear and 5th gear

As the speed of the vehicle reaches the programmed value, the PCM turns shift solenoid valve D ON, A remains ON, and B, C, and E remain OFF. Shift solenoid valve D pressure (SD) is applied to the left side of shift valve D. Shift valve D is moved to the right side uncovering the A/T clutch pressure control solenoid valve C pressure port leading to the 5th clutch. A/T clutch pressure control solenoid valve B pressure (56) changes to 4th clutch pressure (40) at shift valve B. A/T clutch pressure control solenoid valve C pressure (57) changes to (5L) at shift valve D and to (5N) at shift valve B, and becomes 5th clutch pressure (50) at shift valve A. The 4th and 5th clutches are engaged gently.

NOTE: When used, "left" or "right" indicates direction on the hydraulic circuit.

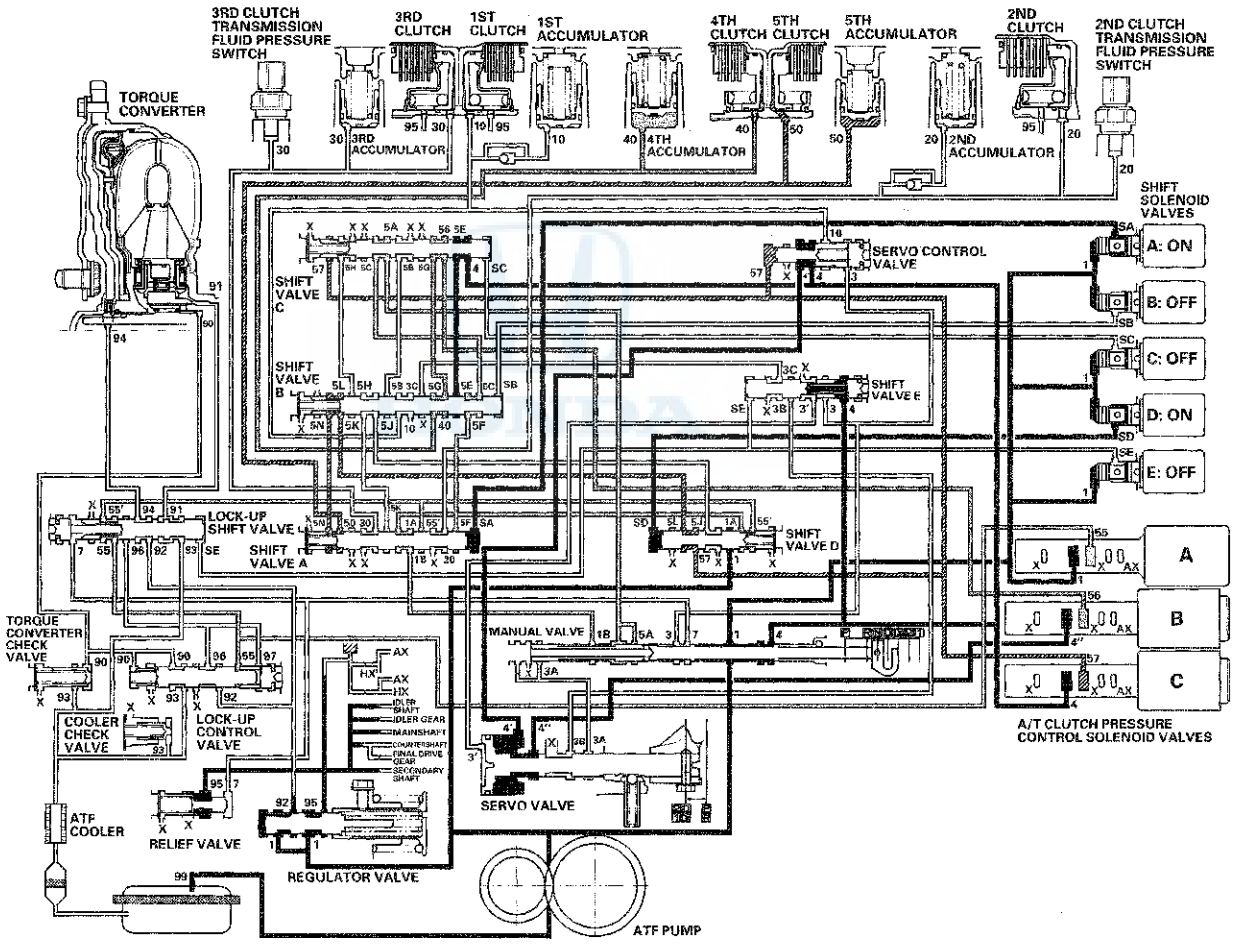

D Position: Driving in 5th gear

The PCM turns shift solenoid valve C ON, A and D remain ON, and B and E remain OFF. Shift solenoid valve C pressure (SC) is applied to the right side of shift valve C. Shift valve C is moved to the left side. This directs A/T clutch pressure control solenoid valve B pressure to shift valve B where it is blocked. The pressure in the 4th clutch is released through shift valve C.

5th clutch pressure (50) is held high by A/T clutch pressure control solenoid valve C, and the 5th clutch is engaged securely.

NOTE: When used, "left" or "right" indicates direction on the hydraulic circuit.

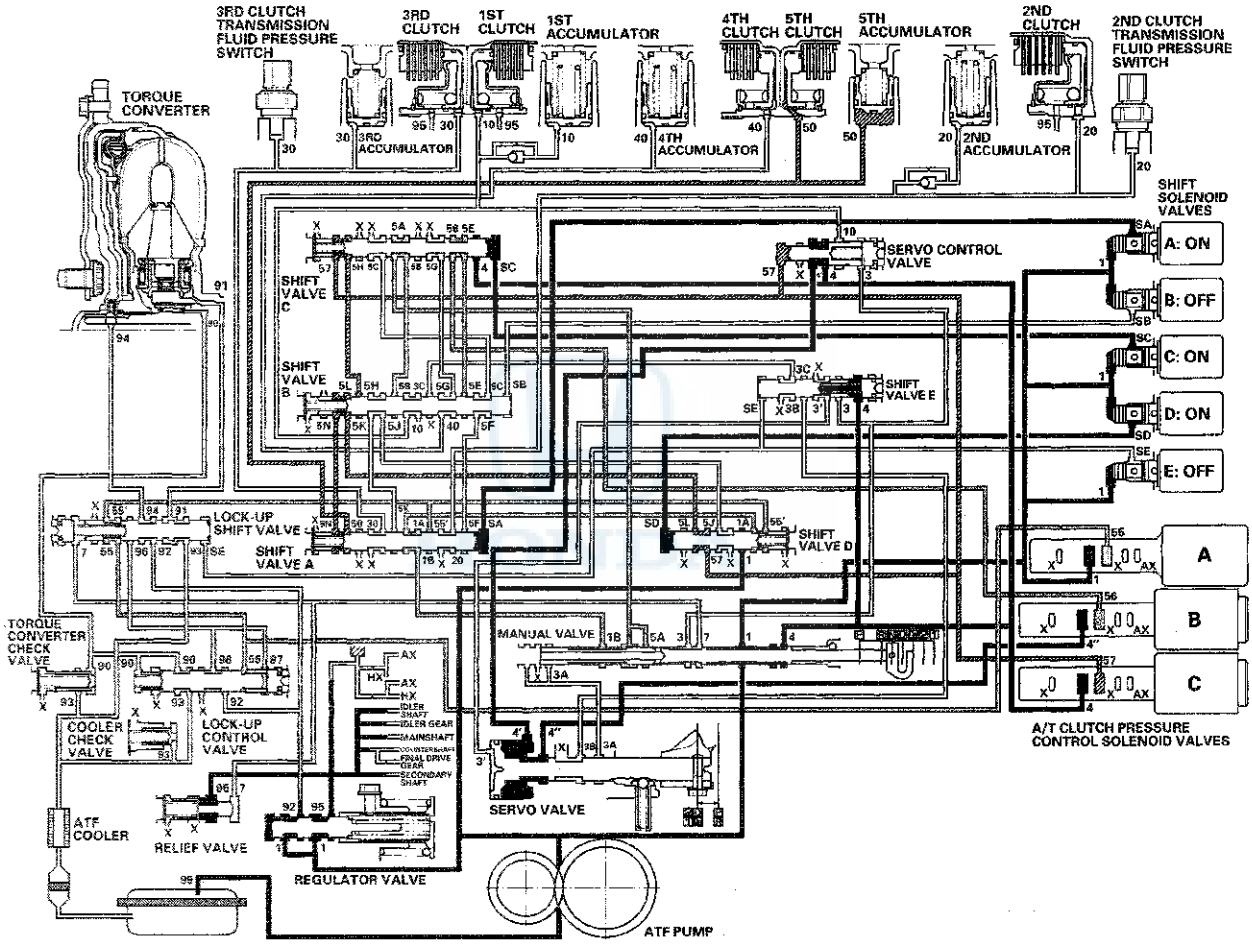

(cont'd)

System Description (cont'd)

Hydraulic Flow (cont'd)

2 Position
The PCM turns the shift solenoid valves OFF and ON. The conditions of the shift solenoid valves and the positions of the shift valves are as follows:

- Shift solenoid valve A: OFF, and shift valve A remains on the in right side
- Shift solenoid valve B: ON, and shift valve B moves to the left side
- Shift solenoid valve C: OFF, and shift valve C remains on the in right side
- Shift solenoid valve D: ON, and shift valve D moves to the right side
- Shift solenoid valve E: OFF, and shift valve E remains on the in left side

Line pressure (1) changes to line pressure (4) at the manual valve, and flows to shift valve C. Line pressure (4) flows to shift valve A via shift valve B, and becomes 2nd clutch pressure (20). 2nd clutch pressure (20) is applied to the 2nd clutch, and the 2nd clutch is engaged.

NOTE: When used, "left" or "right" indicates direction on the hydraulic circuit.

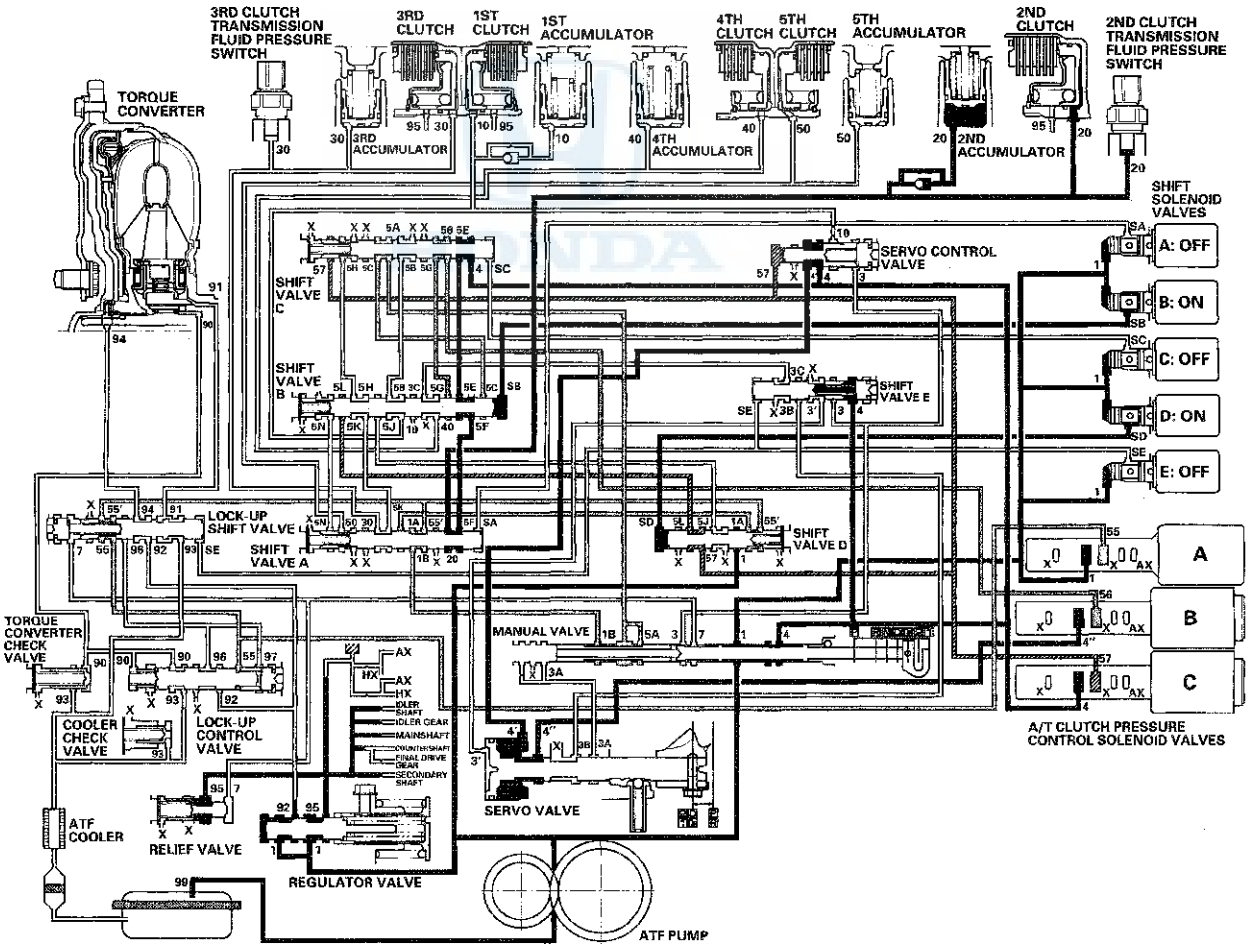

1 Position
The PCM turns the shift solenoid valves OFF and ON. The conditions of the shift solenoid valves and the positions of the shift valves are as follows:

- Shift solenoid valve A: ON, and shift valve A moves to the left side
- Shift solenoid valve B: ON, and shift valve B moves to the left side
- Shift solenoid valve C: ON, and shift valve C moves to the left side
- Shift solenoid valve D: OFF, and shift valve D remains on the in left side
- Shift solenoid valve E: OFF, and shift valve E remains on the in left side

Line pressure (1) becomes 1st clutch pressure (10) at shift valve B.

Fluid flows to 1st clutch by way of:
Line Pressure (1) → Shift Valve D — Line Pressure (1A) → Shift Valve A — Line Pressure (1B) → Manual Valve — Line Pressure (5A) → Shift Valve C — Line Pressure (5B) → Shift Valve B — 1st Clutch Pressure (10) → 1st Clutch

1st clutch pressure (10) is applied to the 1st clutch, and the 1st clutch is engaged.

NOTE: When used, "left" or "right" indicates direction on the hydraulic circuit.

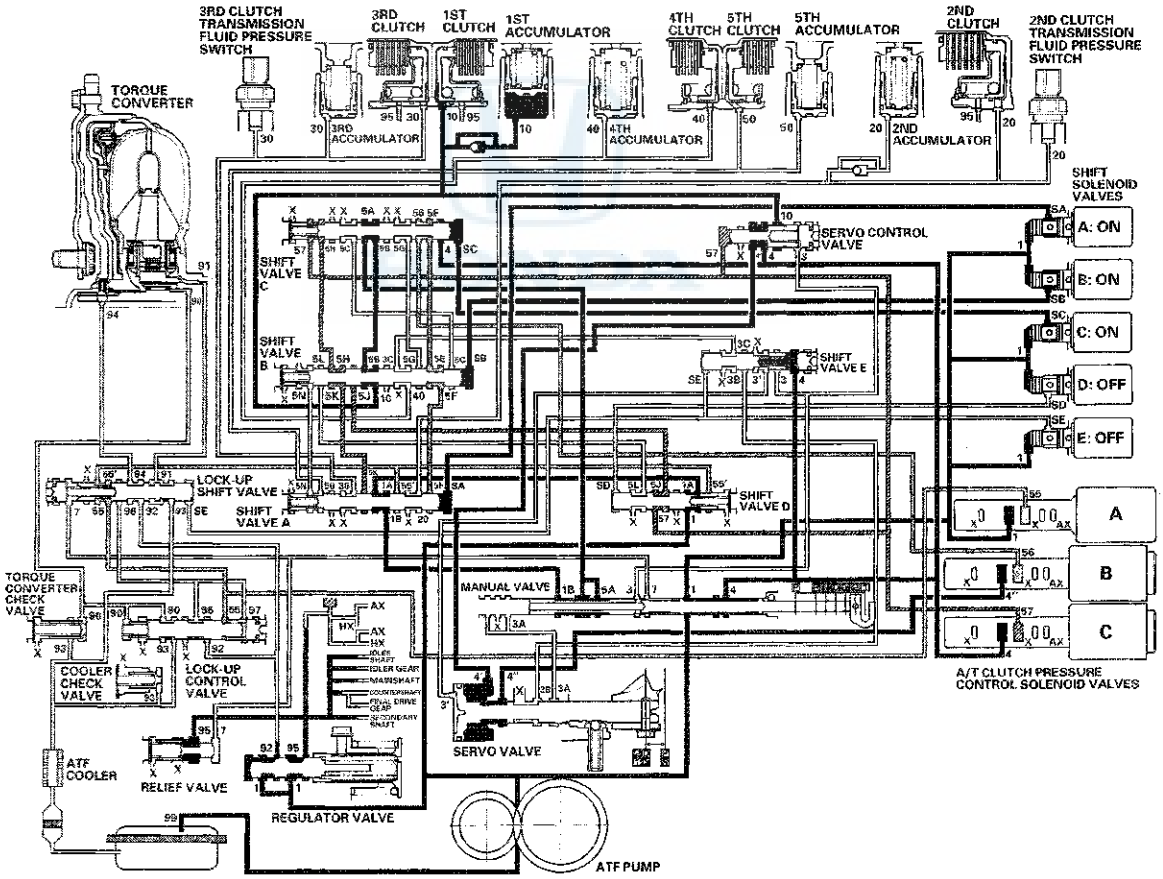

(cont'd)

System Description (cont'd)

Hydraulic Flow (cont'd)

R Position: Shifting to R position from P or N position
When shifting to R, the PCM turns shift solenoid valves B and E ON, and A, C, and D are turned OFF. Shift solenoid valve B pressure (SB) is applied to the right side of shift valve B, and shift valve B is moved to the left side. Shift solenoid valve E pressure (SE) is applied to the left side of shift valve E, and shift valve E is moved to the right side. Line pressure (1) changes to (3) at the manual valve, and flows to the servo valve via shift valve E. The servo valve is moved to the reverse range position. Movement of shift valves B and E, and the servo valve creates 4th clutch line pressure between the 4th clutch and A/T clutch pressure control solenoid valve A. 4th clutch pressure (40) is applied to the 4th clutch, and the 4th clutch is engaged gently.

NOTE: When used, "left" or "right" indicates direction on the hydraulic circuit.

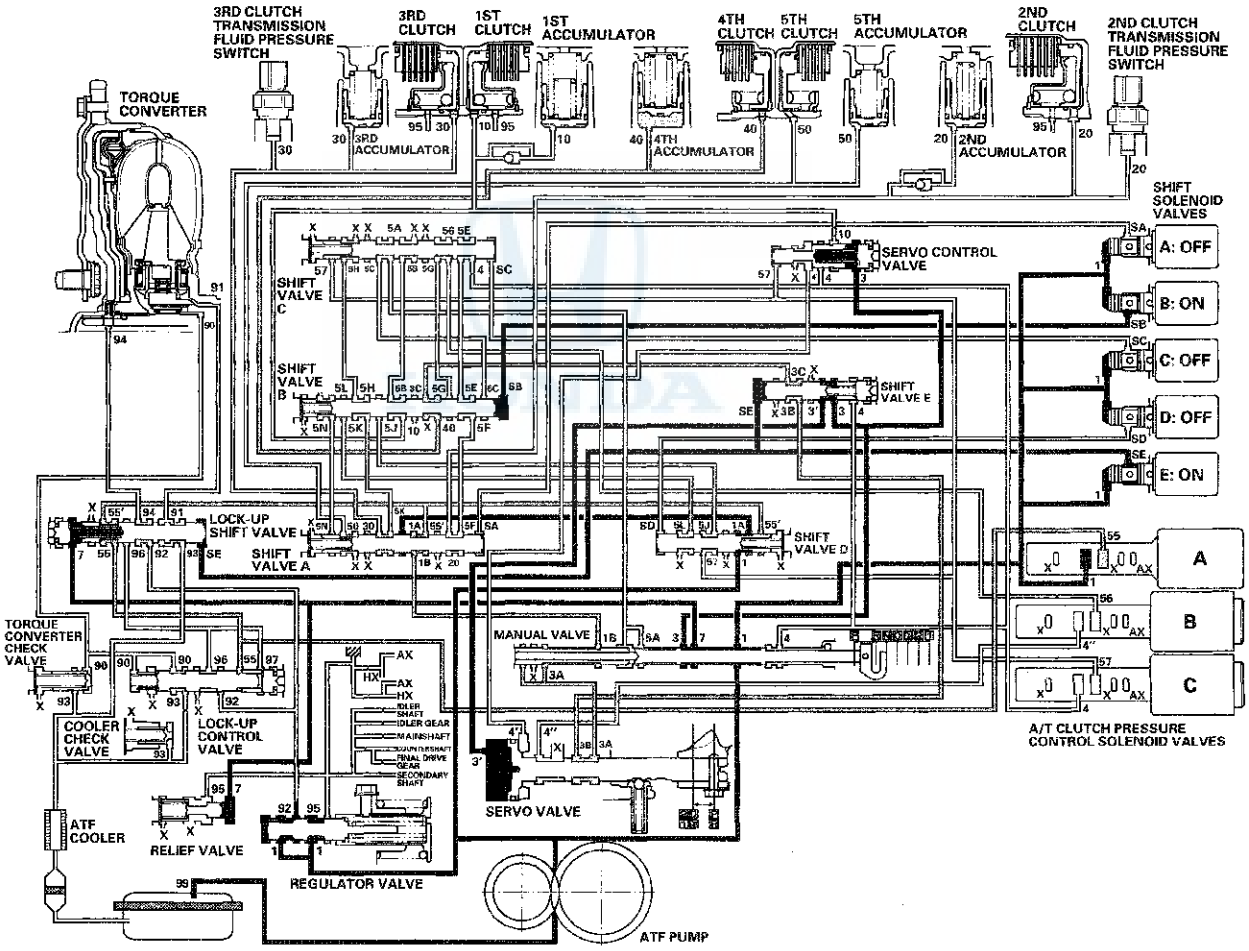

R Position: Driving in reverse gear
After starting off in reverse gear, the PCM turns shift solenoid valve A ON, B and E remain ON, and C and D remain OFF. Shift solenoid valve A pressure (SA) is applied to the right side of shift valve A to cover the A/T clutch pressure control solenoid valve A pressure port, and uncovers the line pressure port leading to the 4th clutch creating full line pressure. The 4th clutch is engaged securely with line pressure.

Reverse Inhibitor Control
When R is selected while the vehicle is moving forward, the PCM commands shift solenoid valve A to turn OFF, and E to remain OFF. Shift solenoid valve A pressure (SA) is not applied to shift valve A so that line pressure (3A) is not applied to the servo valve. Also shift solenoid valve E pressure (SE) is not applied to shift valve E so that line pressure (3') is not applied to the servo valve. The servo valve cannot be shifted to the reverse position, and hydraulic pressure is not applied to the 4th clutch from the servo valve for reverse; as a result, power is not transmitted to the reverse direction.

NOTE: When used, "left" or "right" indicates direction on the hydraulic circuit.

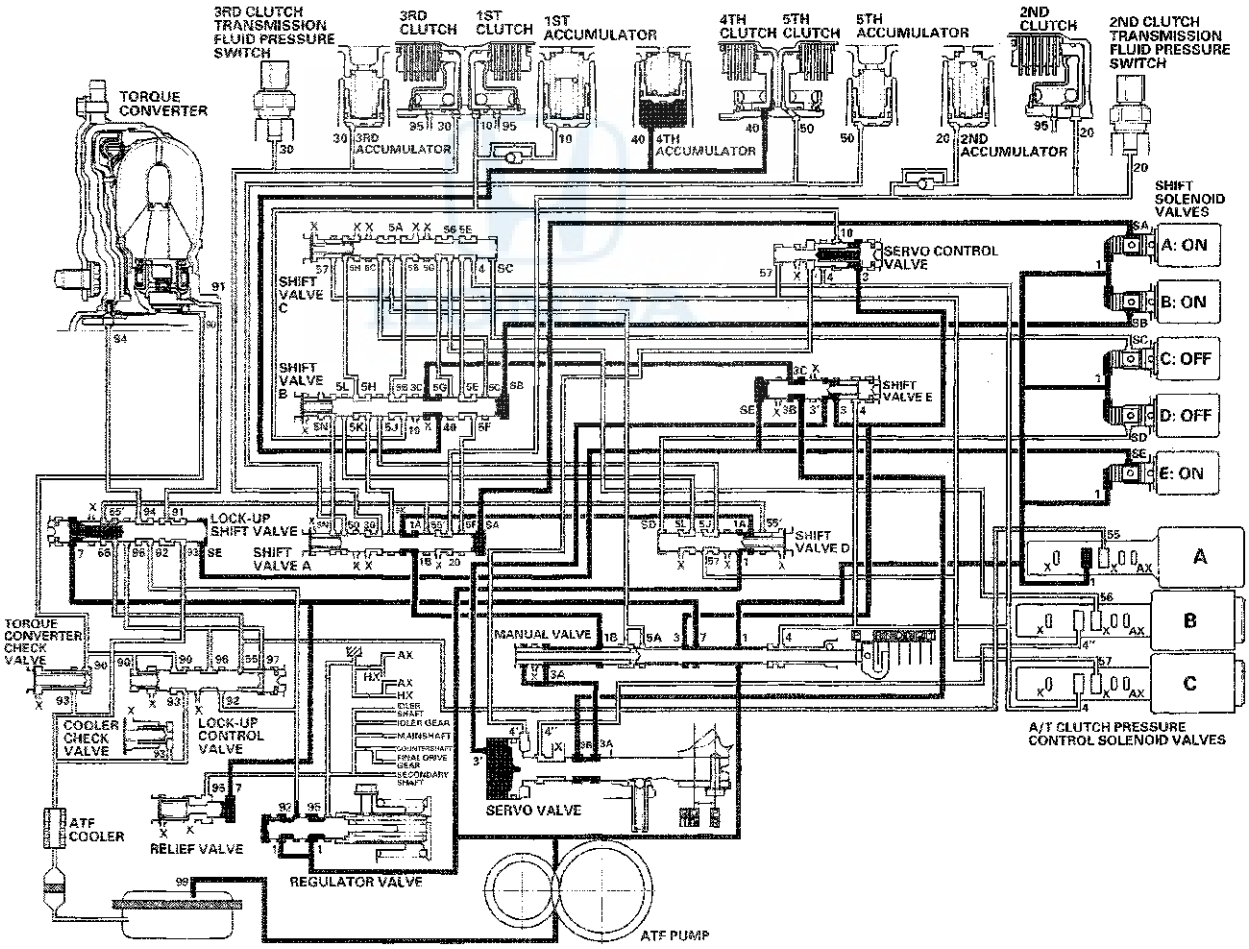

(cont'd)

System Description (cont'd)

Hydraulic Flow (cont'd)

P Position

The PCM turns shift solenoid valves B and E ON, and A, C, and D OFF. Line pressure (1) flows to the shift solenoid valves and A/T clutch pressure control solenoid valve A. Line pressure (3) changes to (3') at shift valve E, and flows to the servo valve. The servo valve is moved to the reverse/park position. Hydraulic pressure is not applied to the clutches.

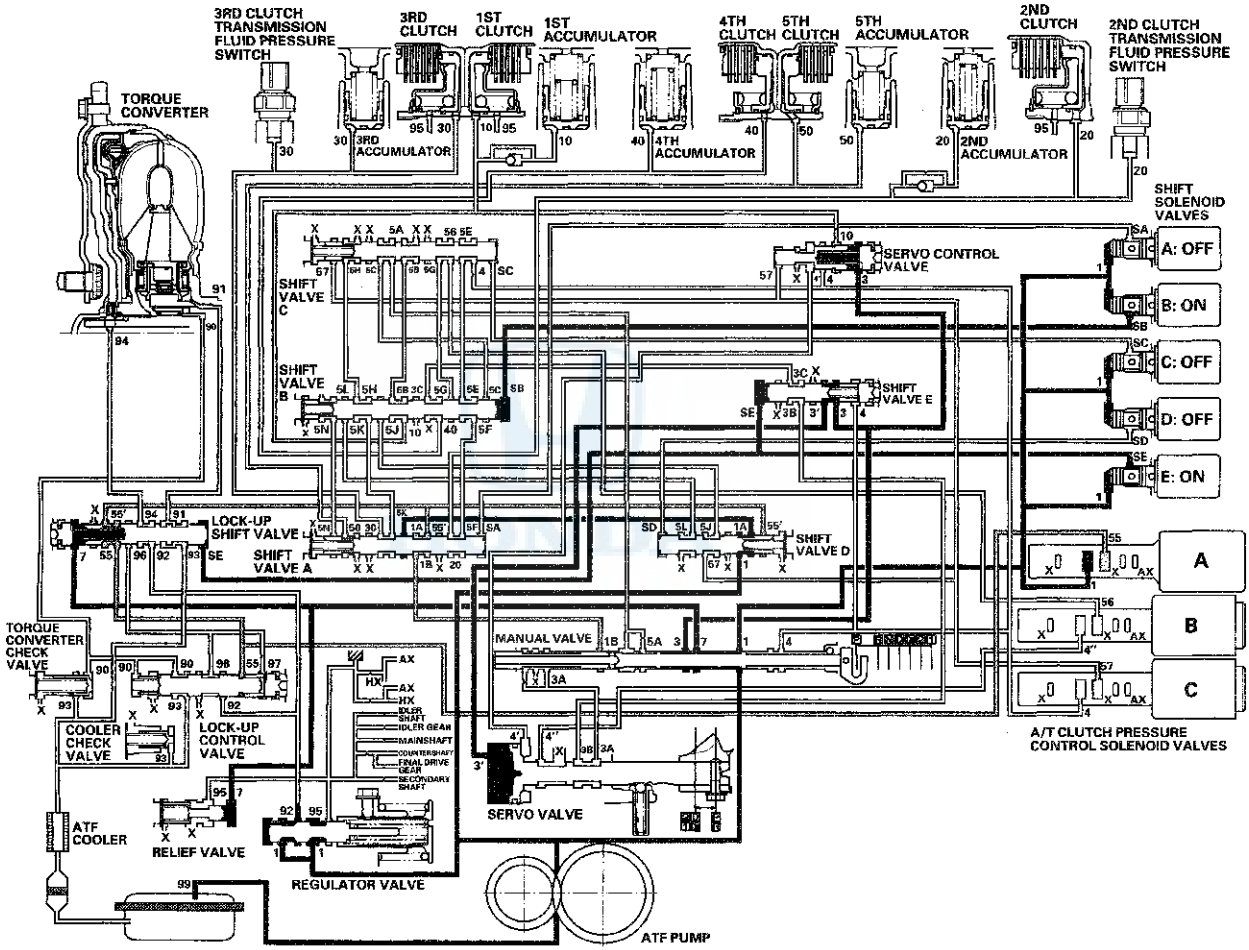

Lock-up System

The lock-up mechanism of the torque converter clutch operates in D (2nd, 3rd, 4th, and 5th gears), and in D3 (2nd and 3rd gears). The pressurized fluid is drained from the back of the torque converter through a fluid passage, causing the torque converter clutch piston to be held against the torque converter cover. As this takes place, the mainshaft rotates at the same speed as the engine. Together with the hydraulic control, the PCM optimizes the timing and volume of the lock-up mechanism. When shift solenoid valve E is turned on by the PCM, shift solenoid valve E pressure switches the lock-up shift valve on. A/T clutch pressure control solenoid valve A and the lock-up control valve control the amount of the lock-up.

Torque Converter Clutch Lock-up ON (Engaging Torque Converter Clutch)
Fluid in the chamber between the torque converter cover and the torque converter clutch piston is drained off, and fluid entering from the chamber between the pump and the stator exerts pressure through the torque converter clutch piston against the torque converter cover. The torque converter clutch piston engages with the torque converter cover; the torque converter clutch lock-up is ON, and the mainshaft rotates at the same speed as the engine.

Power flow

The power flows by way of:

Engine
↓
Drive plate
↓
Torque converter cover
↓
Torque converter clutch piston
↓
Damper spring
↓
Turbine
↓
Mainshaft

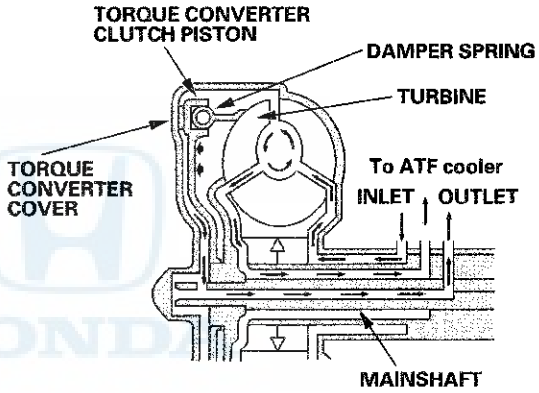

Torque Converter Clutch Lock-up OFF (Disengaging Torque Converter Clutch)
Fluid enters into the chamber between the torque converter cover and the torque converter clutch piston and passes through the torque converter and goes out through the chambers between the turbine and the stator, and between the pump and the stator. As a result, the torque converter clutch piston moves away from the torque converter cover, and the torque converter lock-up clutch is released; the torque converter clutch lock-up is OFF.

Power flow

The power flows by way of:

Engine
↓
Drive plate
↓
Torque converter cover
↓
Pump
↓
Turbine
↓
Mainshaft

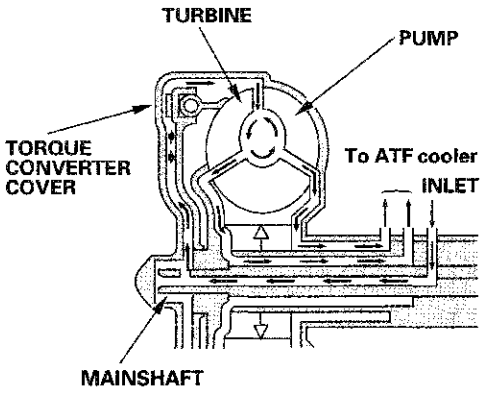

(cont'd)

System Description (cont'd)

Lock-up System (cont'd)

No Lock-up

The PCM turns shift solenoid valve E OFF, and shift solenoid valve E pressure (SE) is not applied to the lock-up shift valve. The lock-up shift valve remains to the right uncovering the torque converter pressure ports leading to the left side of the torque converter and releasing pressure from the right side of the torque converter. Torque converter pressure (92) changes to (94) at the lock-up shift valve, and enters into the left side of the torque converter to disengage the torque converter clutch. This keeps the torque converter clutch piston keeps away from the torque converter cover and the torque converter clutch lock-up is OFF.

NOTE: When used, "left" or "right" indicates direction on the hydraulic circuit.

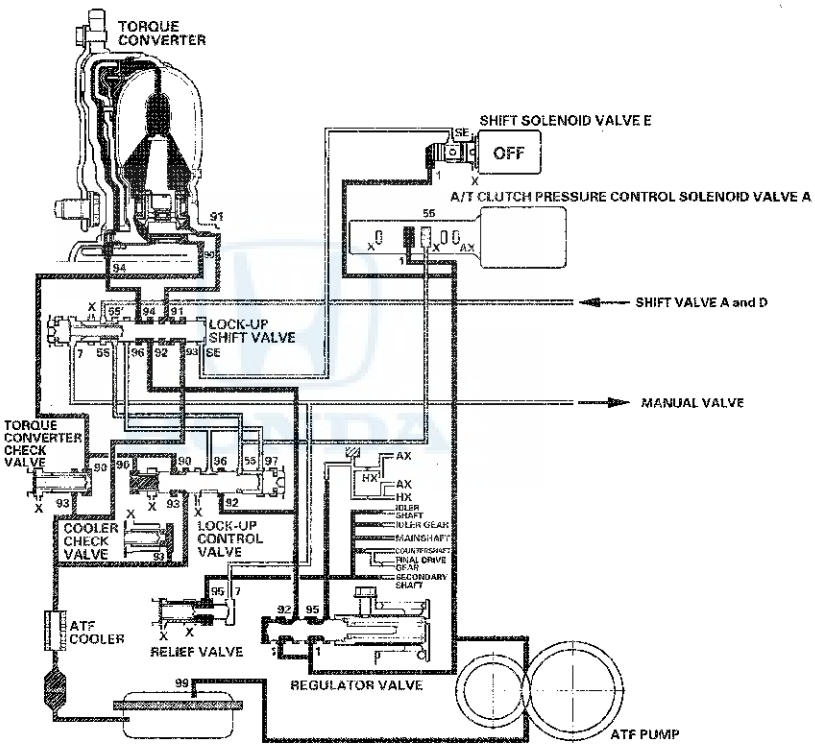

Partial Lock-up

As the speed of the vehicle reaches the programmed value, the PCM turns shift solenoid valve E ON, and shift solenoid valve E pressure (SE) is applied to the right side of the lock-up shift valve. The lock-up shift valve is moved to the left side to switch the torque converter pressure (91) port, which goes to the right side of the torque converter, and torque converter pressure (94) is released from the left side of the torque converter. Torque converter pressure (91) flows to the right side of the torque converter to engage the torque converter clutch. The PCM also controls A/T clutch pressure control solenoid valve A to regulate A/T clutch pressure control solenoid valve A pressure (55) which is applied to the lock-up shift valve and the lock-up control valve. The position of the lock-up control valve depends on A/T clutch pressure control solenoid valve A pressure (55) and torque converter pressure released from the torque converter. The lock-up control valve controls the amount of torque converter clutch lock-up until fluid between the clutch piston and the torque converter cover is fully released; the torque converter clutch is in partial lock-up.

NOTE: When used, "left" or "right" indicates direction on the hydraulic circuit.

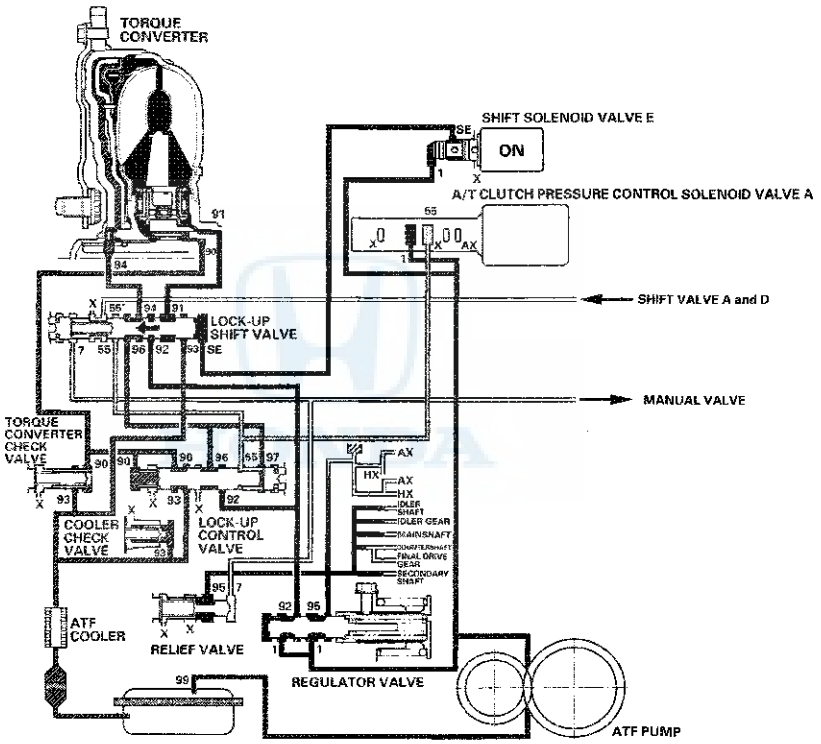

(cont'd)

System Description (cont'd)

Lock-up System (cont'd)

Full Lock-up
When the vehicle speed increases, the PCM commands A/T clutch pressure control solenoid valve A to increase A/T clutch pressure control solenoid valve A pressure (55), and the lock-up control valve is moved to the left by the increased pressure. Then torque converter pressure (94) from the left side of the torque converter is completely released at the lock-up control valve, and torque converter pressure (91) engages the torque converter clutch securely; the torque converter clutch is in full lock-up.

NOTE: When used, "left" or "right" indicates direction on the hydraulic circuit.

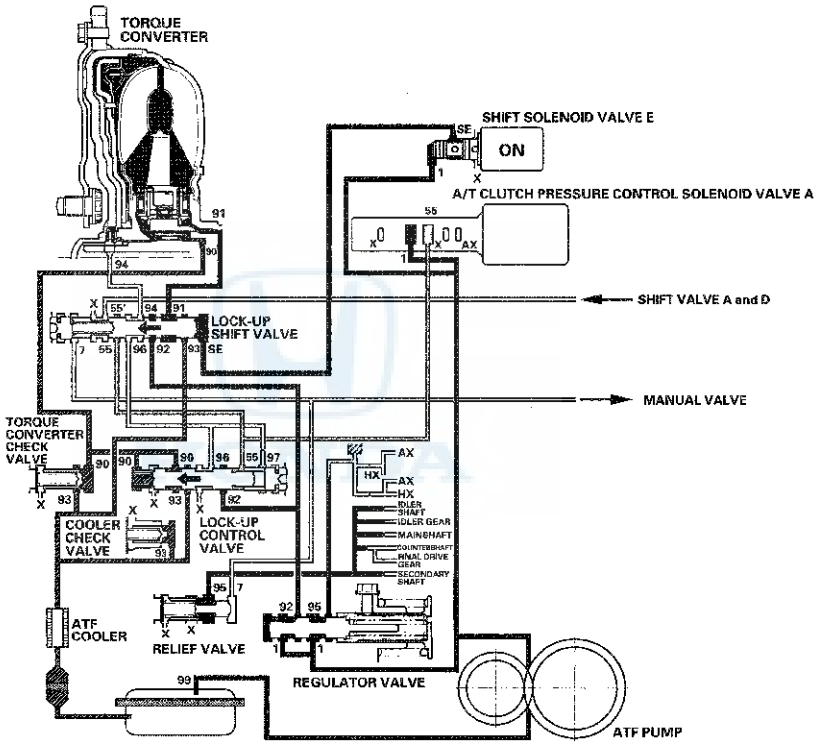

Shift Lock System

The shift lock system prevents the shift lever from mis-shifting. The shift lock solenoid is usually OFF. After starting the engine in P, the shift lever cannot move to any other position from P because the shift lock stop stops the lock pin unless the brake pedal is pressed. When the brake pedal is pressed and the accelerator pedal is not pressed, the shift lock solenoid is ON; the shift lock solenoid plunger in the shift lock solenoid pulls the shift lock stop to release the lock pin. Pressing the shift lever button, allows the shift lever to move to any other position. When the brake pedal and the accelerator pedal are pressed at the same time, the shift lock system is not unlocked.

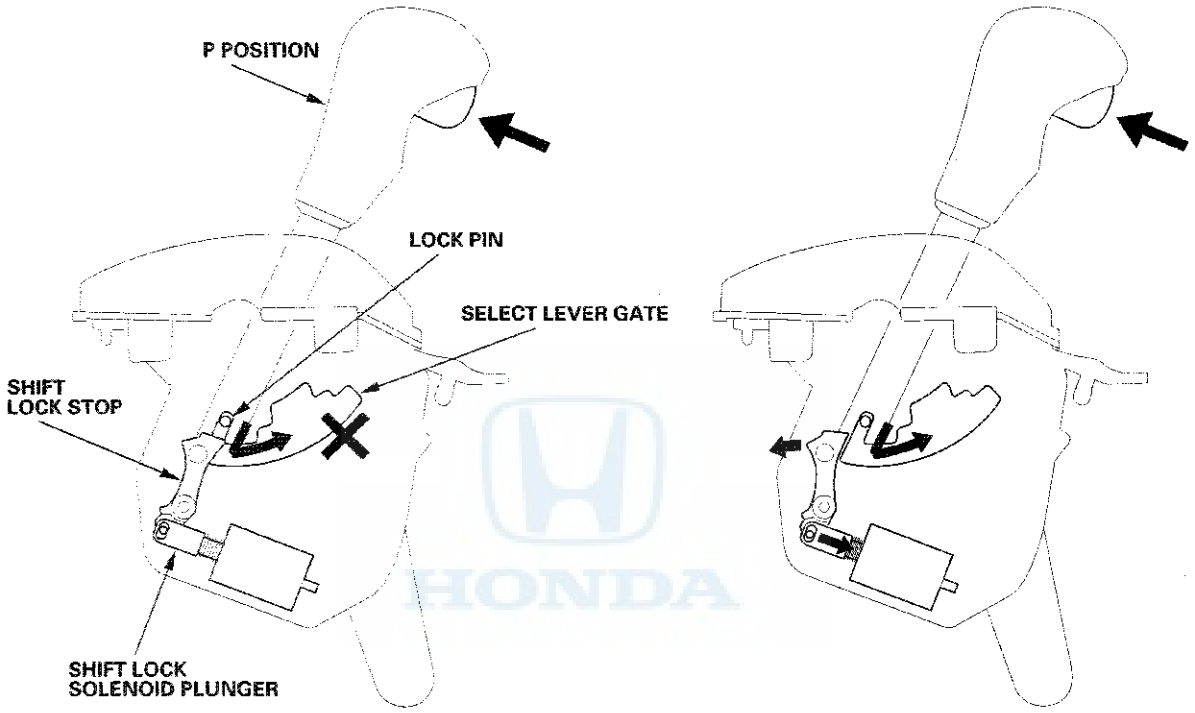

SHIFT LOCK SOLENOID: OFF

SHIFT LOCK SOLENOID: ON

*: This illustration shows the Type B shift lever.

(cont'd)

System Description (cont'd)

Shift Lock System (cont'd)

When the shift lock system does not operate for a mechanical or electrical trouble, you can unlock the shift lock temporarily by inserting the ignition key into the shift lock release hole and press the shift lock release. When the shift lock release is pressed, the shift lock stop releases the lock pin, and the shift lever can move to any other position.

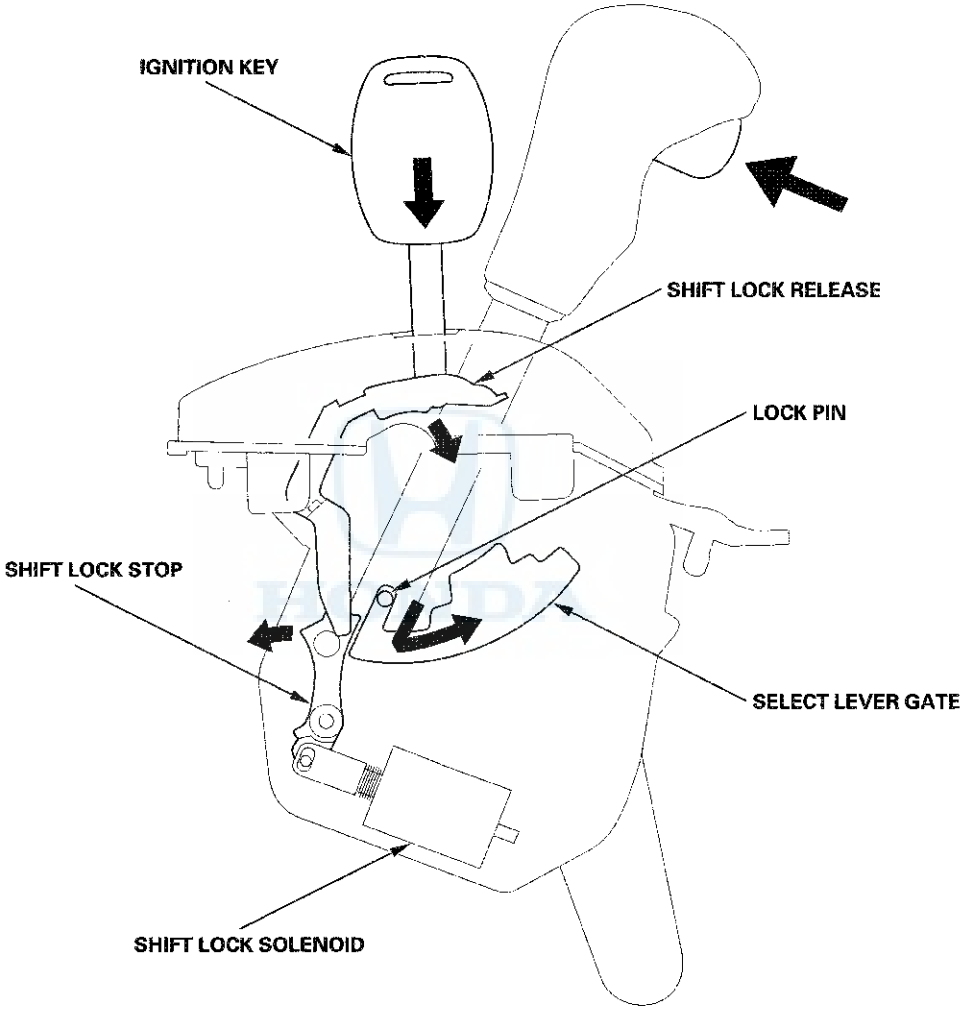

*: This illustration shows the Type B shift lever.

Circuit Diagram - PCM A/T Control System

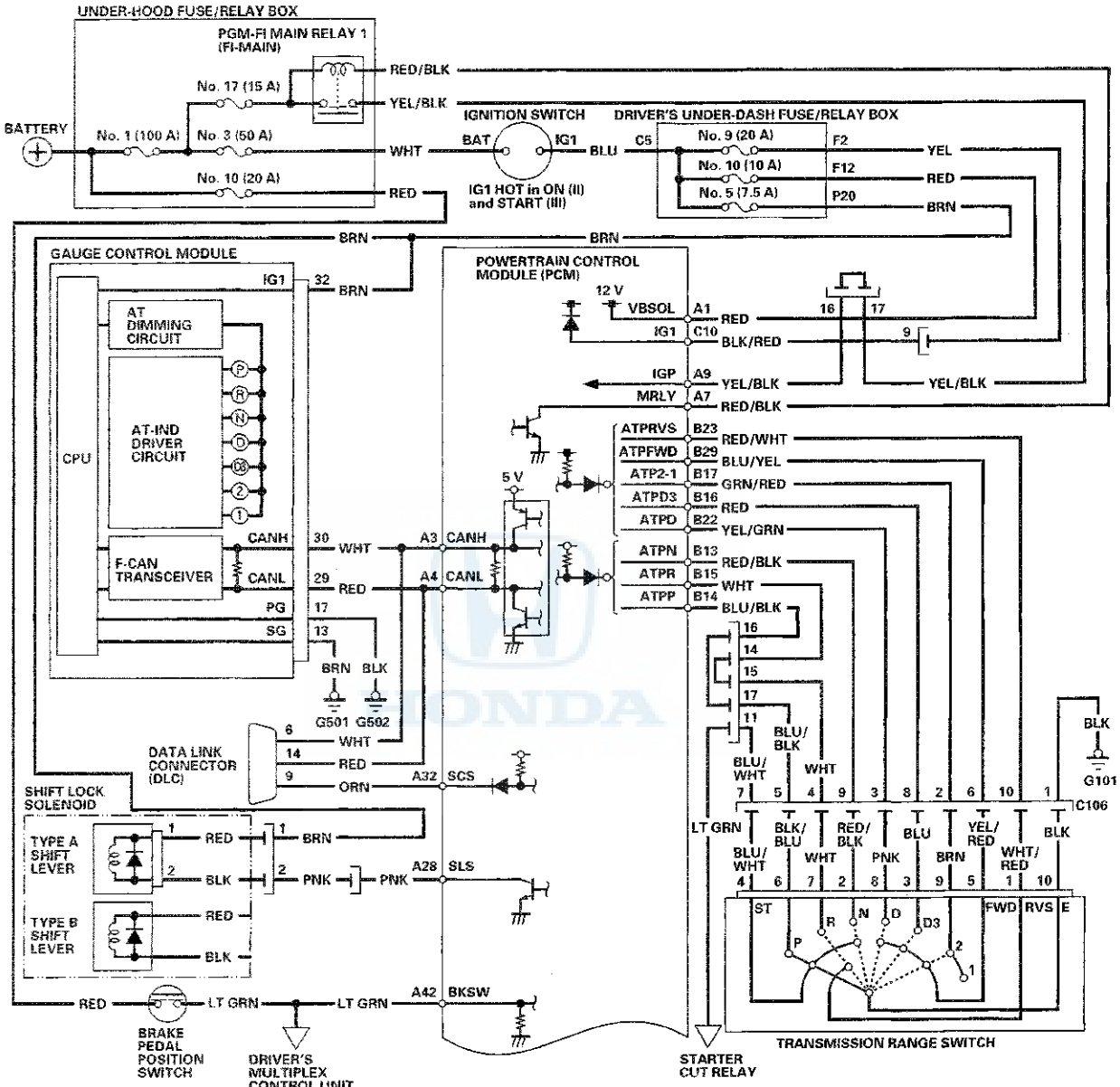

PCM Connector Terminal Locations

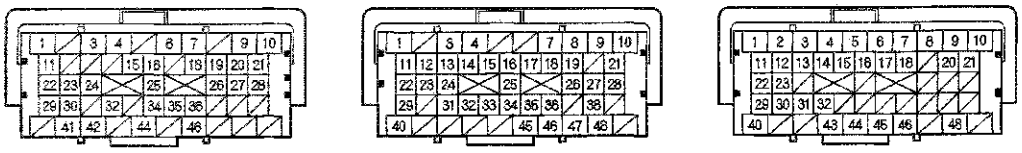

A □ (49P) B △ (49P) C ○ (49P)

Terminal side of female terminals

(cont'd)

System Description (cont'd)

Circuit Diagram - PCM A/T Control System (cont'd)

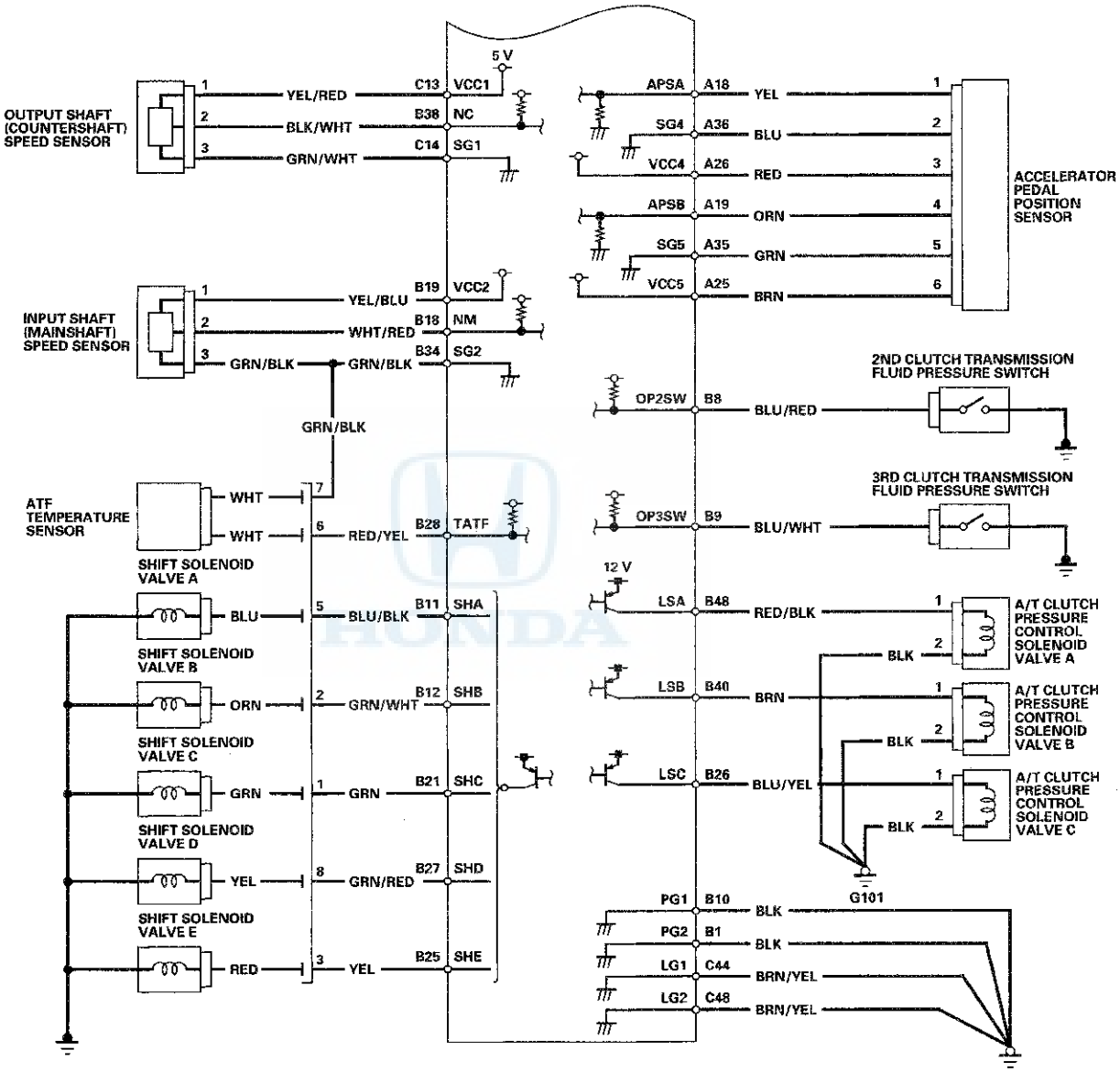

PCM Connector Terminal Locations

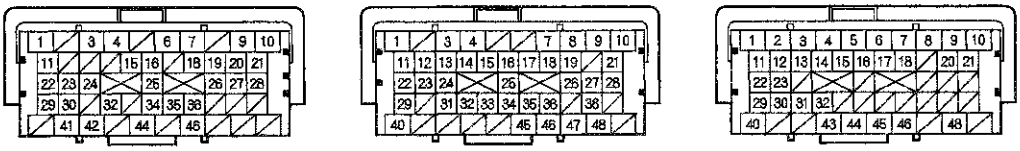

A □ (49P) B △ (49P) C ○ (49P)

Terminal side of female terminals

DTC Troubleshooting

DTC P062F: Powertrain Control Module (PCM) Internal Control Module Keep Alive Memory (KAM) Error

NOTE: Before you troubleshoot, record all freeze data and any on-board snapshot with the HDS, and review General Troubleshooting Information (see page 14-4).

1. Turn the ignition switch to ON (II).

2. Clear the DTC with the HDS.

3. Check for Temporary DTCs or DTCs in the PGM-FI SYSTEM with the HDS.

   Is DTC P062F indicated in the PGM-FI SYSTEM?

   YES—Go to the DTC P062F troubleshooting in the PGM-FI system. ■

   NO—Go to step 4.

4. Check for Temporary DTCs or DTCs in the A/T SYSTEM with the HDS.

   Is DTC P062F indicated in the A/T SYSTEM?

   YES—Go to step 5.

   NO—Intermittent failure, the system is OK at this time. If any other Temporary DTCs or DTCs were indicated, go to the indicated DTC's troubleshooting. ■

5. Update the PCM if it does not have the latest software (see page 11-215), or substitute a known-good PCM (see page 14-8).

6. Start the engine, and wait for at least 2 minutes.

7. Check for Temporary DTCs or DTCs in the A/T SYSTEM with the HDS.

   Is DTC P062F indicated in the A/T SYSTEM?

   YES—Check for poor connections or loose terminals at the PCM. If the PCM was updated, substitute a known-good PCM (see page 14-8), then go to step 6. If the PCM was substituted, go to step 1.

   NO—Go to step 8.

8. Monitor the OBD STATUS for P062F in the DTCs MENU with the HDS.

   Does the HDS indicate PASSED?

   YES—If the PCM was updated, troubleshooting is complete. If the PCM was substituted, replace the original PCM (see page 11-216). If any other Temporary DTCs or DTCs were indicated in step 7, go to the indicated DTC's troubleshooting. ■

   NO—If the HDS indicates FAILED, check for poor connections or loose terminals at the PCM. If the PCM was updated, substitute a known-good PCM (see page 14-8), then go to step 6. If the PCM was substituted, go to step 1. If the HDS indicates NOT COMPLETED, go to step 6.

DTC Troubleshooting (cont'd)

DTC P0705: Short in Transmission Range Switch Circuit (Multiple Shift-position Input)

NOTE:
- Before you troubleshoot, record all freeze data and any on-board snapshot with the HDS, and review General Troubleshooting Information (see page 14-4).
- This code is caused by an electrical circuit problem and cannot be caused by a mechanical problem in the transmission.

1. Turn the ignition switch to ON (II).
2. Clear the DTC with the HDS.
3. Start the engine.
4. With the brake pedal pressed, move the shift lever through all positions. Stop for at least 1 second in each position.
5. Monitor the OBD STATUS for P0705 in the DTCs MENU with the HDS.

   Does the HDS indicate FAILED?

   YES—Go to step 6.

   NO—If the HDS indicates PASSED, intermittent failure, the system is OK at this time. Check for intermittent short to body ground in the wires between the transmission range switch and the PCM. If the HDS indicates NOT COMPLETED, go to step 3.
6. Turn the ignition switch to LOCK (0).
7. Inspect the transmission range switch (see page 14-278).

   Is the switch OK?

   YES—With the switch connector disconnected, go to step 8.

   NO—Replace the transmission range switch (see page 14-280), then go to step 50.
8. Turn the ignition switch to ON (II).
9. Measure the voltage between transmission range switch connector terminals No. 6 and No. 10.

TRANSMISSION RANGE SWITCH CONNECTOR

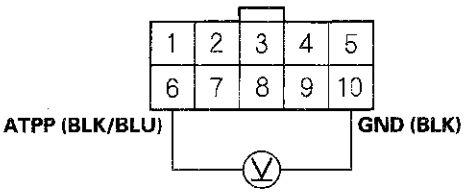

Wire side of female terminals

Is there more than 5.0 V?

YES—Go to step 15.

NO—Go to step 10.

10. Turn the ignition switch to LOCK (0).

11. Jump the SCS line with the HDS.

12. Disconnect PCM connector B (49P).

13. Check for continuity between PCM connector terminal B14 and body ground.

PCM CONNECTOR B (49P)

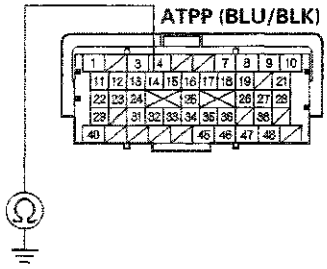

Terminal side of female terminals

Is there continuity?

YES—Repair short to body ground in the wire between PCM connector terminal B14 and the transmission range switch, then go to step 50.

NO—Go to step 14.

14. Check for continuity between transmission range switch connector terminal No. 10 and body ground.

TRANSMISSION RANGE SWITCH CONNECTOR

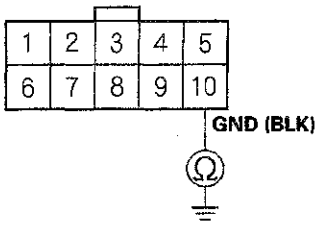

Wire side of female terminals

Is there continuity?

YES—Go to step 57.

NO—Repair open in the wire between transmission range switch connector terminal No. 10 and body ground (G101) (see page 22-22), or repair poor body ground (G101), then go to step 50.

(cont'd)

DTC Troubleshooting (cont'd)

15. Measure the voltage between transmission range switch connector terminals No. 7 and No. 10.

TRANSMISSION RANGE SWITCH CONNECTOR

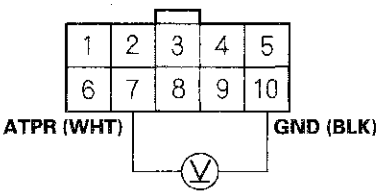

Wire side of female terminals

Is there more than 5.0 V?

YES—Go to step 20.

NO—Go to step 16.

16. Turn the ignition switch to LOCK (0).

17. Jump the SCS line with the HDS.

18. Disconnect PCM connector B (49P).

19. Check for continuity between PCM connector terminal B15 and body ground.

PCM CONNECTOR B (49P)

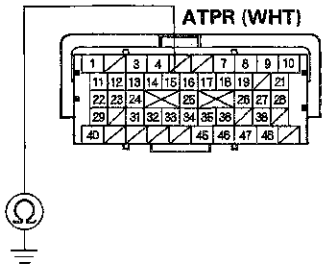

Terminal side of female terminals

Is there continuity?

YES—Repair short to body ground in the wire between PCM connector terminal B15 and the transmission range switch, then go to step 50.

NO—Go to step 57.

20. Measure the voltage between transmission range switch connector terminals No. 2 and No. 10.

TRANSMISSION RANGE SWITCH CONNECTOR

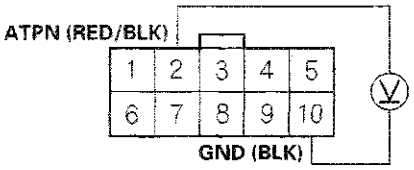

Wire side of female terminals

Is there more than 5.0 V?

YES—Go to step 25.

NO—Go to step 21.

21. Turn the ignition switch to LOCK (0).

22. Jump the SCS line with the HDS.

23. Disconnect PCM connector B (49P).

24. Check for continuity between PCM connector terminal B13 and body ground.

PCM CONNECTOR B (49P)

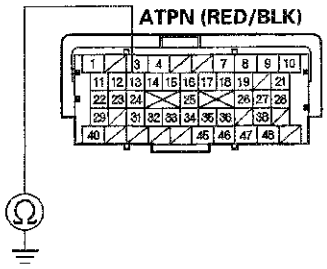

Terminal side of female terminals

Is there continuity?

YES—Repair short to body ground in the wire between PCM connector terminal B13 and the transmission range switch, then go to step 50.

NO—Go to step 57.

(cont'd)

DTC Troubleshooting (cont'd)

25. Measure the voltage between transmission range switch connector terminals No. 8 and No. 10.

TRANSMISSION RANGE SWITCH CONNECTOR

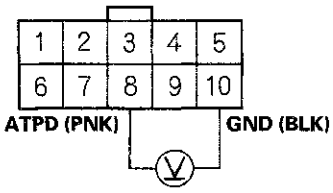

Wire side of female terminals

Is there battery voltage?

YES—Go to step 30.

NO—Go to step 26.

26. Turn the ignition switch to LOCK (0).

27. Jump the SCS line with the HDS.

28. Disconnect PCM connector B (49P).

29. Check for continuity between PCM connector terminal B22 and body ground.

PCM CONNECTOR B (49P)

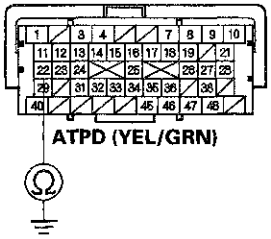

Terminal side of female terminals

Is there continuity?

YES—Repair short to body ground in the wire between PCM connector terminal B22 and the transmission range switch, then go to step 50.

NO—Go to step 57.

30. Measure the voltage between transmission range switch connector terminals No. 3 and No. 10.

TRANSMISSION RANGE SWITCH CONNECTOR

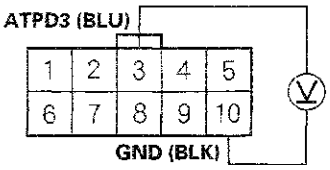

Wire side of female terminals

Is there battery voltage?

YES—Go to step 35.

NO—Go to step 31.

31. Turn the ignition switch to LOCK (0).

32. Jump the SCS line with the HDS.

33. Disconnect PCM connector B (49P).

34. Check for continuity between PCM connector terminal B16 and body ground.

PCM CONNECTOR B (49P)

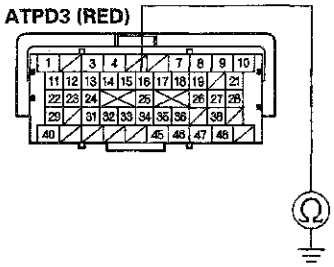

Terminal side of female terminals

Is there continuity?

YES—Repair short to body ground in the wire between PCM connector terminal B16 and the transmission range switch, then go to step 50.

NO—Go to step 57.

(cont'd)

DTC Troubleshooting (cont'd)

35. Measure the voltage between transmission range switch connector terminals No. 9 and No. 10.

TRANSMISSION RANGE SWITCH CONNECTOR

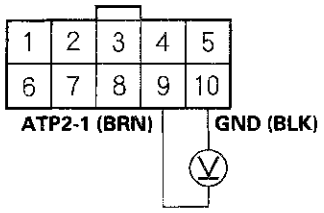

Wire side of female terminals

Is there battery voltage?

YES—Go to step 40.

NO—Go to step 36.

36. Turn the ignition switch to LOCK (0).

37. Jump the SCS line with the HDS.

38. Disconnect PCM connector B (49P).

39. Check for continuity between PCM connector terminal B17 and body ground.

PCM CONNECTOR B (49P)

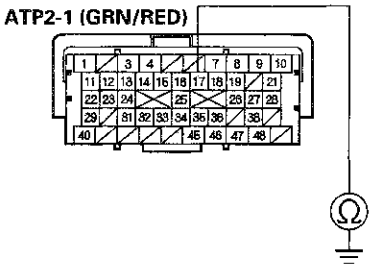

Terminal side of female terminals

Is there continuity?

YES—Repair short to body ground in the wire between PCM connector terminal B17 and the transmission range switch, then go to step 50.

NO—Go to step 57.

40. Measure the voltage between transmission range switch connector terminals No. 5 and No. 10.

TRANSMISSION RANGE SWITCH CONNECTOR

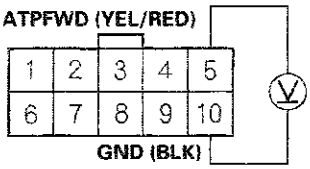

Wire side of female terminals

Is there battery voltage?

YES—Go to step 45.

NO—Go to step 41.

41. Turn the ignition switch to LOCK (0).

42. Jump the SCS line with the HDS.

43. Disconnect PCM connector B (49P).

44. Check for continuity between PCM connector terminal B29 and body ground.

PCM CONNECTOR B (49P)

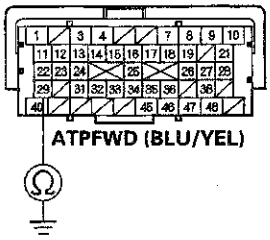

Terminal side of female terminals

Is there continuity?

YES—Repair short to body ground in the wire between PCM connector terminal B29 and the transmission range switch, then go to step 50.

NO—Go to step 57.

(cont'd)

DTC Troubleshooting (cont'd)

45. Measure the voltage between transmission range switch connector terminals No. 1 and No. 10.

TRANSMISSION RANGE SWITCH CONNECTOR

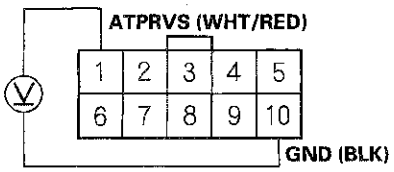

Wire side of female terminals

Is there battery voltage?

YES—Go to step 57.

NO—Go to step 46.

46. Turn the ignition switch to LOCK (0).

47. Jump the SCS line with the HDS.

48. Disconnect PCM connector B (49P).

49. Check for continuity between PCM connector terminal B23 and body ground.

PCM CONNECTOR B (49P)

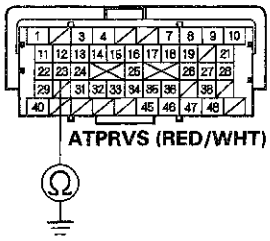

Terminal side of female terminals

Is there continuity?

YES—Repair short to body ground in the wire between PCM connector terminal B23 and the transmission range switch, then go to step 50.

NO—Go to step 57.

50. Reconnect all connectors.

51. Turn the ignition switch to ON (II).

52. Clear the DTC with the HDS.

53. Start the engine.

54. With the brake pedal pressed, move the shift lever through all positions. Stop for at least 1 second in each position.

55. Check for Temporary DTCs or DTCs with the HDS.

    Is DTC P0705 indicated?

    YES—Check for intermittent short to body ground in the wires between the transmission range switch and the PCM, then go to step 1.

    NO—Go to step 56.

56. Monitor the OBD STATUS for P0705 in the DTCs MENU with the HDS.

    Does the HDS indicate PASSED?

    YES—Troubleshooting is complete. If any other Temporary DTCs or DTCs were indicated in step 55, go to the indicated DTC's troubleshooting.■

    NO—If the HDS indicates FAILED, check for intermittent short to body ground in the wires between the transmission range switch and the PCM, then go to step 1. If the HDS indicates NOT COMPLETED, go to step 53.

57. Reconnect all connectors.

58. Update the PCM if it does not have the latest software (see page 11-215), or substitute a known-good PCM (see page 14-8).

59. Start the engine.

60. With the brake pedal pressed, move the shift lever through all positions. Stop for at least 1 second in each position.

61. Check for Temporary DTCs or DTCs with the HDS.

    Is DTC P0705 indicated?

    YES—Check for intermittent short to body ground in the wires between the transmission range switch and the PCM. If the PCM was updated, substitute a known-good PCM (see page 14-8), then go to step 59. If the PCM was substituted, go to step 1.

    NO—Go to step 62.

62. Monitor the OBD STATUS for P0705 in the DTCs MENU with the HDS.

    Does the HDS indicate PASSED?

    YES—If the PCM was updated, troubleshooting is complete. If the PCM was substituted, replace the original PCM (see page 11-216). If any other Temporary DTCs or DTCs were indicated in step 61, go to the indicated DTC's troubleshooting.■

    NO—If the HDS indicates FAILED, check for intermittent short to body ground in the wires between the transmission range switch and the PCM. If the PCM was updated, substitute a known-good PCM (see page 14-8), then go to step 59. If the PCM was substituted, go to step 1. If the HDS indicates NOT COMPLETED, go to step 59.

DTC Troubleshooting (cont'd)

DTC P0706: Open in Transmission Range Switch Circuit

NOTE:
- Before you troubleshoot, record all freeze data and any on-board snapshot with the HDS, and review General Troubleshooting Information (see page 14-4).
- This code is caused by an electrical circuit problem and cannot be caused by a mechanical problem in the transmission.

1. Turn the ignition switch to ON (II).

2. Clear the DTC with the HDS.

3. Raise the front of the vehicle, make sure it is securely supported, and allow the front wheels to rotate freely, or raise the vehicle on a lift.

4. Start the engine, disable the VSA by pressing the VSA OFF switch, run the vehicle with the shift lever in D until the vehicle speed reaches 25 mph (40 km/h), then slow down and stop the wheels.

5. Monitor the OBD STATUS for P0706 in the DTCs MENU with the HDS.

   Does the HDS indicate FAILED?

   YES—Go to step 6.

   NO—If the HDS indicates PASSED, intermittent failure, the system is OK at this time. Check for poor connections or loose terminals between the transmission range switch and the PCM. If the HDS indicates NOT COMPLETED, go to step 4.

6. Turn the ignition switch to LOCK (0).

7. Inspect the transmission range switch (see page 14-278).

   Is the switch OK?

   YES—Go to step 8.

   NO—Replace the transmission range switch (see page 14-280), then go to step 27.

8. Adjust the shift cable (see page 14-272).

9. Turn the ignition switch to ON (II).

10. Clear the DTC with the HDS.

11. Start the engine, disable the VSA by pressing the VSA OFF switch, run the vehicle with the shift lever in D until the vehicle speed reaches 25 mph (40 km/h), then slow down and stop the wheels.

12. Monitor the OBD STATUS for P0706 in the DTCs MENU with the HDS.

    Does the HDS indicate FAILED?

    YES—Go to step 13.

    NO—If the HDS indicates PASSED, troubleshooting is complete. If the HDS indicates NOT COMPLETED, go to step 11.

13. Shift to D, and check the Forward Switch (ATP FWD) and A/T D Switch in the Data List with the HDS.

    Are Forward Switch (ATPFWD) and A/T D Switch ON?

    YES—Go to step 14.

    NO—Go to step 16.

14. Shift to D3, and check the Forward Switch (ATP FWD) and A/T D3 Switch in the Data List with the HDS.

    Are Forward Switch (ATPFWD) and A/T D3 Switch ON?

    YES—Go to step 15.

    NO—Go to step 16.

15. Shift to 2, and check the Forward Switch (ATPFWD) and A/T 2-1 Switch in the Data List with the HDS.

    Are Forward Switch (ATPFWD) and A/T 2-1 Switch ON?

    YES—Go to step 30.

    NO—Go to step 16.

16. Turn the ignition switch to LOCK (0).

17. Disconnect the transmission range switch connector.

18. Check for continuity between transmission range switch connector terminal No. 10 and body ground.

TRANSMISSION RANGE SWITCH CONNECTOR

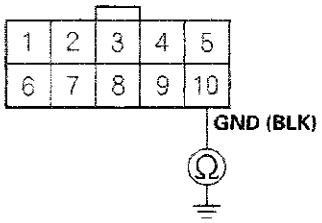

Wire side of female terminals

Is there continuity?

YES—Go to step 19.

NO—Repair open in the wire between transmission range switch connector terminal No. 10 and body ground (G101) (see page 22-22), or repair poor ground (G101), then go to step 24.

19. Turn the ignition switch to ON (II).

20. Measure the voltage between transmission range switch connector terminals No. 5 and No. 10.

TRANSMISSION RANGE SWITCH CONNECTOR

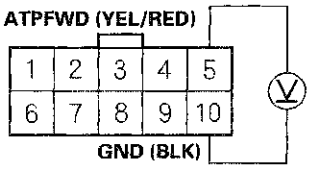

Wire side of female terminals

Is there battery voltage?

YES—Go to step 21.

NO—Repair open in the wire between the transmission range switch and PCM connector terminal B29, then go to step 24.

21. Measure the voltage between transmission range switch connector terminals No. 8 and No. 10.

TRANSMISSION RANGE SWITCH CONNECTOR

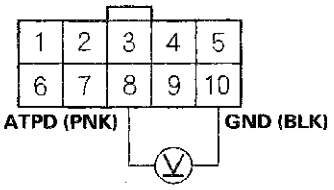

Wire side of female terminals

Is there battery voltage?

YES—Go to step 22.

NO—Repair open in the wire between the transmission range switch and PCM connector terminal B22, then go to step 24.

(cont'd)

DTC Troubleshooting (cont'd)

22. Measure the voltage between transmission range switch connector terminals No. 3 and No. 10.

TRANSMISSION RANGE SWITCH CONNECTOR

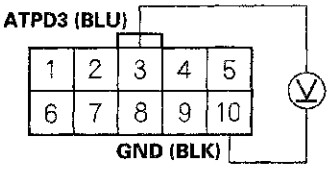

Wire side of female terminals

Is there battery voltage?

YES—Go to step 23.

NO—Repair open in the wire between the transmission range switch and PCM connector terminal B16, then go to step 24.

23. Measure the voltage between transmission range switch connector terminals No. 9 and No. 10.

TRANSMISSION RANGE SWITCH CONNECTOR

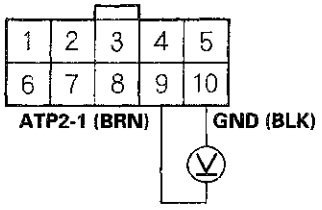

Wire side of female terminals

Is there battery voltage?

YES—Go to step 30.

NO—Repair open in the wire between the transmission range switch and PCM connector terminal B17, then go to step 24.

24. Reconnect all connectors.

25. Turn the ignition switch to ON (II).

26. Clear the DTC with the HDS.

27. Start the engine, disable the VSA by pressing the VSA OFF switch, run the vehicle with the shift lever in D until the vehicle speed reaches 30 mph (48 km/h), then slow down and stop the wheels.

28. Check for Temporary DTCs or DTCs with the HDS.

Is DTC P0706 indicated?

YES—Check for poor connections or loose terminals between the transmission range switch and the PCM, then go to step 1.

NO—Go to step 29.

29. Monitor the OBD STATUS for P0706 in the DTCs MENU with the HDS.

Does the HDS indicate PASSED?

YES—Troubleshooting is complete. If any other Temporary DTCs or DTCs were indicated in step 28, go to the indicated DTC's troubleshooting.■

NO—If the HDS indicates FAILED, check for poor connections or loose terminals between the transmission range switch and the PCM, then go to step 1. If the HDS indicates NOT COMPLETED, go to step 27.

30. Reconnect all connectors.

31. Update the PCM if it does not have the latest software (see page 11-215), or substitute a known-good PCM (see page 14-8).

32. Start the engine, disable the VSA by pressing the VSA OFF switch, run the vehicle with the shift lever in D until the vehicle speed reaches 30 mph (48 km/h), then slow down and stop the wheels.

33. Check for Temporary DTCs or DTCs with the HDS.

Is DTC P0706 indicated?

YES—Check for poor connections or loose terminals between the transmission range switch and the PCM. If the PCM was updated, substitute a known-good PCM (see page 14-8), then go to step 32. If the PCM was substituted, go to step 1.

NO—Go to step 34.

34. Monitor the OBD STATUS for P0706 in the DTCs MENU with the HDS.

Does the HDS indicate PASSED?

YES—If the PCM was updated, troubleshooting is complete. If the PCM was substituted, replace the original PCM (see page 11-216). If any other Temporary DTCs or DTCs were indicated in step 33, go to the indicated DTC's troubleshooting. ■

NO—If the HDS indicates FAILED, check for poor connections or loose terminals between the transmission range switch and the PCM. If the PCM was updated, substitute a known-good PCM (see page 14-8), then go to step 32. If the PCM was substituted, go to step 1. If the HDS indicates NOT COMPLETED, go to step 32.

DTC P0711: Problem in ATF Temperature Sensor Circuit

NOTE:
- Before you troubleshoot, record all freeze data and any on-board snapshot with the HDS, and review General Troubleshooting Information (see page 14-4).
- This code is caused by an electrical circuit problem and cannot be caused by a mechanical problem in the transmission.

1. Turn the ignition switch to ON (II).

2. Check the ATF Temp Sensor in the Data List with the HDS.

Does the ATF temperature exceed the ambient air temperature?

YES—Record the ATF temperature. Leave the engine off for at least 30 minutes, then go to step 3.

NO—Record the ATF temperature. Test the stall speed RPM (see page 14-208) three times, then go to step 3.

3. Check the ATF Temp Sensor in the Data List with the HDS.

Did the ATF temperature change?

YES—Leave the engine off for at least 30 minutes, then go to step 4.

NO—Replace the ATF temperature sensor (see page 14-228), then go to step 6.

4. Check the ECT Sensor in the Data List with the HDS.

Does the ECT Sensor read about the same as the ambient air temperature?

YES—Go to step 5.

NO—Leave the engine off until the ECT Sensor reads the same as the ambient air temperature, then go to step 5.

(cont'd)

DTC Troubleshooting (cont'd)

5. Check the ATF Temp Sensor in the Data List with the HDS.

   Does the ATF temperature read about the same as ECT Sensor?

   YES—Go to step 14.

   NO—Replace the ATF temperature sensor (see page 14-228), then go to step 6.

6. Reconnect all connectors.

7. Turn the ignition switch to ON (II).

8. Clear the DTC with the HDS.

9. Start the engine, and warm it up to normal operating temperature (the radiator fan comes on).

10. Allow the engine coolant temperature to cool to the ambient air temperature.

11. Start the engine, and warm it up to normal operating temperature (the radiator fan comes on), and wait for at least 20 seconds, then drive the vehicle at speeds over 19 mph (31 km/h) for at least 5 minutes.

12. Check for Temporary DTCs or DTCs with the HDS.

    Is DTC P0711 indicated?

    YES—Check for poor connections or loose terminals between the ATF temperature sensor and the PCM, then go to step 1.

    NO—Go to step 13.

13. Monitor the OBD STATUS for P0711 in the DTCs MENU with the HDS.

    Does the HDS indicate PASSED?

    YES—Troubleshooting is complete. If any other Temporary DTCs or DTCs were indicated in step 12, go to the indicated DTC's troubleshooting.■

    NO—If the HDS indicates FAILED, check for poor connections or loose terminals between the ATF temperature sensor and the PCM, then go to step 1. If the HDS indicates NOT COMPLETED, go to step 9.

14. Update the PCM if it does not have the latest software (see page 11-215), or substitute a known-good PCM (see page 14-8).

15. Start the engine, and warm it up to normal operating temperature (the radiator fan comes on).

16. Allow the engine coolant temperature to cool to the ambient air temperature.

17. Start the engine, and warm it up to normal operating temperature (the radiator fan comes on), and wait for at least 20 seconds, then drive the vehicle at speeds over 19 mph (31 km/h) for at least 5 minutes.

18. Check for Temporary DTCs or DTCs with the HDS.

    Is DTC P0711 indicated?

    YES—Check for poor connections or loose terminals between the ATF temperature sensor and the PCM. If the PCM was updated, substitute a known-good PCM (see page 14-8), then go to step 15. If the PCM was substituted, go to step 1.

    NO—Go to step 19.

19. Monitor the OBD STATUS for P0711 in the DTCs MENU with the HDS.

    Does the HDS indicate PASSED?

    YES—If the PCM was updated, troubleshooting is complete. If the PCM was substituted, replace the original PCM (see page 11-216). If any other Temporary DTCs or DTCs were indicated in step 18, go to the indicated DTC's troubleshooting.■

    NO—If the HDS indicates FAILED, check for poor connections or loose terminals between the ATF temperature sensor and the PCM. If the PCM was updated, substitute a known-good PCM (see page 14-8), then go to step 15. If the PCM was substituted, go to step 1. If the HDS indicates NOT COMPLETED, go to step 15.

DTC P0712: Short in ATF Temperature Sensor Circuit

NOTE:
- Before you troubleshoot, record all freeze data and any on-board snapshot with the HDS, and review General Troubleshooting Information (see page 14-4).
- This code is caused by an electrical circuit problem and cannot be caused by a mechanical problem in the transmission.

1. Turn the ignition switch to ON (II).

2. Check the ATF Temp Sensor voltage in the Data List with the HDS.

   Is the ATF Temp Sensor voltage 0.07 V or less?

   YES—Go to step 3.

   NO—Intermittent failure, the system is OK at this time. Check for an intermittent short to body ground in the TATF wire between the ATF temperature sensor and the PCM. ■

3. Turn the ignition switch to LOCK (0).

4. Disconnect the shift solenoid wire harness connector.

5. Turn the ignition switch to ON (II).

6. Check the ATF Temp Sensor voltage in the Data List with the HDS.

   Is the ATF Temp Sensor voltage 0.07 V or less?

   YES—Go to step 7.

   NO—Replace the ATF temperature sensor (see page 14-228), then go to step 11.

7. Turn the ignition switch to LOCK (0).

8. Jump the SCS line with the HDS.

9. Disconnect PCM connector B (49P).

10. Check for continuity between shift solenoid wire harness connector terminal No. 6 and body ground.

SHIFT SOLENOID WIRE HARNESS CONNECTOR

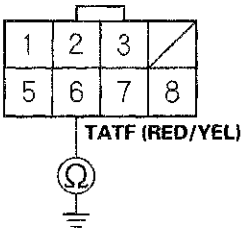

Wire side of female terminals

Is there continuity?

YES—Repair short to body ground in the wire between PCM connector terminal B28 and shift solenoid wire harness connector terminal No. 6, then go to step 11.

NO—Go to step 17.

(cont'd)

DTC Troubleshooting (cont'd)

11. Reconnect all connectors.

12. Turn the ignition switch to ON (II).

13. Clear the DTC with the HDS.

14. Start the engine with the shift lever in P, and wait for at least 20 seconds.

15. Check for Temporary DTCs or DTCs with the HDS.

    Is DTC P0712 indicated?

    YES—Check for intermittent short to body ground in the wire between the ATF temperature sensor and the PCM, then go to step 1.

    NO—Go to step 16.

16. Monitor the OBD STATUS for P0712 in the DTCs MENU with the HDS.

    Does the HDS indicate PASSED?

    YES—Troubleshooting is complete. If any other Temporary DTCs or DTCs were indicated in step 15, go to the indicated DTC's troubleshooting.■

    NO—If the HDS indicates FAILED, check for intermittent short to body ground in the wire between the ATF temperature sensor and the PCM, then go to step 1. If the HDS indicates NOT COMPLETED, go to step 14.

17. Reconnect all connectors.

18. Update the PCM if it does not have the latest software (see page 11-215), or substitute a known-good PCM (see page 14-8).

19. Start the engine with the shift lever in P, and wait for at least 20 seconds.

20. Check for Temporary DTCs or DTCs with the HDS.

    Is DTC P0712 indicated?

    YES—Check for intermittent short to body ground in the wire between the ATF temperature sensor and the PCM. If the PCM was updated, substitute a known-good PCM (see page 14-8), then go to step 19. If the PCM was substituted, go to step 1.

    NO—Go to step 21.

21. Monitor the OBD STATUS for P0712 in the DTCs MENU with the HDS.

    Does the HDS indicate PASSED?

    YES—If the PCM was updated, troubleshooting is complete. If the PCM was substituted, replace the original PCM (see page 11-216). If any other Temporary DTCs or DTCs were indicated in step 20, go to the indicated DTC's troubleshooting.■

    NO—If the HDS indicates FAILED, check for intermittent short to body ground in the wire between the ATF temperature sensor and the PCM. If the PCM was updated, substitute a known-good PCM (see page 14-8), then go to step 19. If the PCM was substituted, go to step 1. If the HDS indicates NOT COMPLETED, go to step 19.

DTC P0713: Open in ATF Temperature Sensor Circuit

NOTE:
- Before you troubleshoot, record all freeze data and any on-board snapshot with the HDS, and review General Troubleshooting Information (see page 14-4).
- This code is caused by an electrical circuit problem and cannot be caused by a mechanical problem in the transmission.

1. Turn the ignition switch to ON (II).

2. Check the ATF Temp Sensor voltage in the Data List with the HDS.

   Does the ATF Temp Sensor voltage exceed 4.93 V?

   YES—Go to step 3.

   NO—Intermittent failure, the system is OK at this time. Check for poor connections or loose terminals between the ATF temperature sensor and the PCM. ■

3. Turn the ignition switch to LOCK (0).

4. Disconnect the shift solenoid wire harness connector.

5. Connect shift solenoid wire harness connector terminals No. 6 and No. 7 with a jumper wire.

SHIFT SOLENOID WIRE HARNESS CONNECTOR

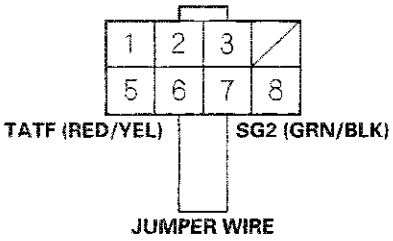

Wire side of female terminals

6. Turn the ignition switch to ON (II).

7. Check the ATF Temp Sensor voltage in the Data List with the HDS.

   Does the ATF Temp Sensor voltage exceed 4.93 V?

   YES—Go to step 8.

   NO—Replace the ATF temperature sensor (see page 14-228), then go to step 21.

8. Turn the ignition switch to LOCK (0).

9. Remove the jumper wire from the shift solenoid wire harness connector.

10. Turn the ignition switch to ON (II).

11. Measure the voltage between shift solenoid wire harness connector terminal No. 6 and body ground.

SHIFT SOLENOID WIRE HARNESS CONNECTOR

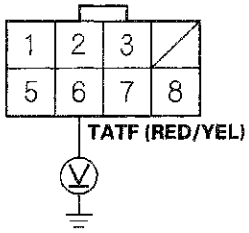

Wire side of female terminals

Is there about 5 V?

YES—Go to step 12.

NO—Go to step 17.

(cont'd)

DTC Troubleshooting (cont'd)

12. Turn the ignition switch to LOCK (0).

13. Jump the SCS line with the HDS.

14. Disconnect PCM connector B (49P).

15. Connect shift solenoid wire harness connector terminal No. 7 and body ground with a jumper wire.

SHIFT SOLENOID WIRE HARNESS CONNECTOR

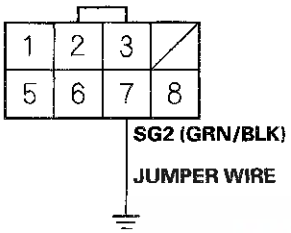

Wire side of female terminals

16. Check for continuity between PCM connector terminal B34 and body ground.

PCM CONNECTOR B (49P)

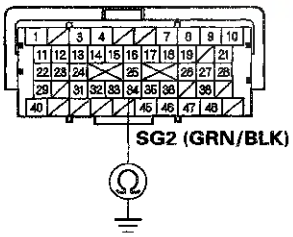

Terminal side of female terminals

Is there continuity?

YES—Go to step 27.

NO—Repair open in the wire between PCM connector terminal B34 and the ATF temperature sensor, then go to step 21.

17. Turn the ignition switch to LOCK (0).

18. Jump the SCS line with the HDS.

19. Disconnect PCM connector B (49P).

20. Check for continuity between PCM connector terminal B28 and shift solenoid wire harness connector terminal No. 6.

SHIFT SOLENOID WIRE HARNESS CONNECTOR **PCM CONNECTOR B (49P)**

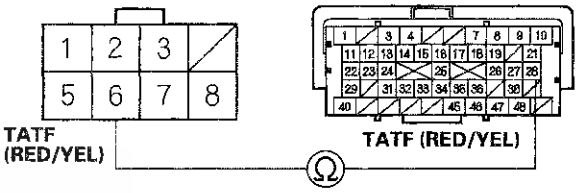

Wire side of female terminals

Terminal side of female terminals

Is there continuity?

YES—Go to step 27.

NO—Repair open in the wire between PCM connector terminal B28 and the ATF temperature sensor, then go to step 21.

21. Reconnect all connectors.

22. Turn the ignition switch to ON (II).

23. Clear the DTC with the HDS.

24. Start the engine with the shift lever in P, and wait for at least 20 seconds.

25. Check for Temporary DTCs or DTCs with the HDS.

Is DTC P0713 indicated?

YES—Check for poor connections or loose terminals between the ATF temperature sensor and the PCM, then go to step 1.

NO—Go to step 26.

26. Monitor the OBD STATUS for P0713 in the DTCs MENU with the HDS.

Does the HDS indicate PASSED?

YES—Troubleshooting is complete. If any other Temporary DTCs or DTCs were indicated in step 25, go to the indicated DTC's troubleshooting.■

NO—If the HDS indicates FAILED, check for poor connections or loose terminals between the ATF temperature sensor and the PCM, then go to step 1. If the HDS indicates NOT COMPLETED, go to step 24.

27. Reconnect all connectors.

28. Update the PCM if it does not have the latest software (see page 11-215), or substitute a known-good PCM (see page 14-8).

29. Start the engine with the shift lever in P, and wait for at least 20 seconds.

30. Check for Temporary DTCs or DTCs with the HDS.

Is DTC P0713 indicated?

YES—Check for poor connections or loose terminals between the ATF temperature sensor and the PCM. If the PCM was updated, substitute a known-good PCM (see page 14-8), then go to step 29. If the PCM was substituted, go to step 1.

NO—Go to step 31.

31. Monitor the OBD STATUS for P0713 in the DTCs MENU with the HDS.

Does the HDS indicate PASSED?

YES—If the PCM was updated, troubleshooting is complete. If the PCM was substituted, replace the original PCM (see page 11-216). If any other Temporary DTCs or DTCs were indicated in step 30, go to the indicated DTC's troubleshooting.■

NO—If the HDS indicates FAILED, check for poor connections or loose terminals between the ATF temperature sensor and the PCM. If the PCM was updated, substitute a known-good PCM (see page 14-8), then go to step 29. If the PCM was substituted, go to step 1. If the HDS indicates NOT COMPLETED, go to step 29.

DTC P0716: Problem in Input Shaft (Mainshaft) Speed Sensor Circuit

DTC P0717: Problem in Input Shaft (Mainshaft) Speed Sensor Circuit (No Signal Input)

NOTE:
- Before you troubleshoot, record all freeze data and any on-board snapshot with the HDS, and review General Troubleshooting Information (see page 14-4).
- This code is caused by an electrical circuit problem and cannot be caused by a mechanical problem in the transmission.

1. Check for proper input shaft (mainshaft) speed sensor installation (see page 14-226).

2. Turn the ignition switch to ON (II).

3. Clear the DTC with the HDS.

4. Raise the front of the vehicle, make sure it is securely supported, and allow the front wheels to rotate freely, or raise the vehicle on a lift.

5. Start the engine, disable the VSA by pressing the VSA OFF switch, run the vehicle with the shift lever in D, at speeds over 12 mph (20 km/h) for at least 10 seconds. Slow down and stop the wheels.

6. Monitor the OBD STATUS for P0716 or P0717 in the DTCs MENU with the HDS.

Does the HDS indicate FAILED?

YES—Go to step 7.

NO—If the HDS indicates PASSED, intermittent failure, the system is OK at this time. Check for poor connections or loose terminals between the input shaft (mainshaft) speed sensor and the PCM. If the HDS indicates NOT COMPLETED, go to step 5.

(cont'd)

DTC Troubleshooting (cont'd)

7. Turn the ignition switch to LOCK (0).
8. Jump the SCS line with the HDS.
9. Disconnect PCM connector C (49P).
10. Check for continuity between PCM connector terminal C44 and body ground, and between terminal C48 and body ground.

PCM CONNECTOR C (49P)

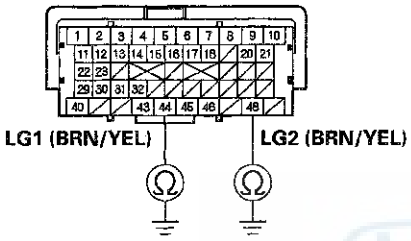

Terminal side of female terminals

Is there continuity?

YES—Go to step 11.

NO—Repair open in the wires between PCM connector terminals C44, C48, and body ground (G101) (see page 22-22), or repair poor ground (G101), then go to step 26.

11. Connect PCM connector C (49P).
12. Disconnect the input shaft (mainshaft) speed sensor connector.
13. Turn the ignition switch to ON (II).
14. Measure the voltage between input shaft (mainshaft) speed sensor connector terminal No. 1 and body ground.

INPUT SHAFT (MAINSHAFT) SPEED SENSOR CONNECTOR

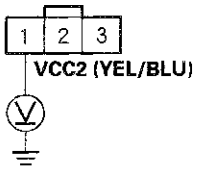

Wire side of female terminals

Is there about 5 V?

YES—Go to step 15.

NO—Go to step 21.

15. Measure the voltage between input shaft (mainshaft) speed sensor connector terminals No. 2 and No. 3.

INPUT SHAFT (MAINSHAFT) SPEED SENSOR CONNECTOR

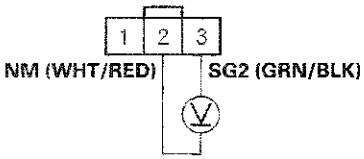

Wire side of female terminals

Is there about 5 V?

YES—Replace the input shaft (mainshaft) speed sensor (see page 14-226), then go to step 26.

NO—Go to step 16.

16. Turn the ignition switch to LOCK (0).

17. Jump the SCS line with the HDS.

18. Disconnect PCM connector B (49P).

19. Check for continuity between input shaft (mainshaft) speed sensor connector terminal No. 2 and body ground.

INPUT SHAFT (MAINSHAFT) SPEED SENSOR CONNECTOR

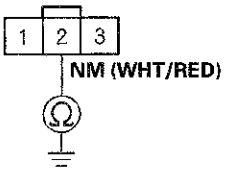

Wire side of female terminals

Is there continuity?

YES—Repair short to body ground in the wire between PCM connector terminal B18 and the input shaft (mainshaft) speed sensor, then go to step 26.

NO—Go to step 20.

(cont'd)

DTC Troubleshooting (cont'd)

20. Check for continuity between PCM connector terminal B18 and input shaft (mainshaft) speed sensor connector terminal No. 2.

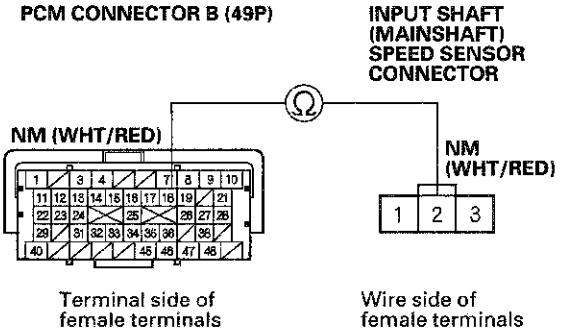

Is there continuity?

YES—Go to step 25.

NO—Repair open in the wire between PCM connector terminal B18 and the input shaft (mainshaft) speed sensor, then go to step 26.

21. Turn the ignition switch to LOCK (0).

22. Jump the SCS line with the HDS.

23. Disconnect PCM connector B (49P).

24. Check for continuity between PCM connector terminal B19 and input shaft (mainshaft) speed sensor connector terminal No. 1.

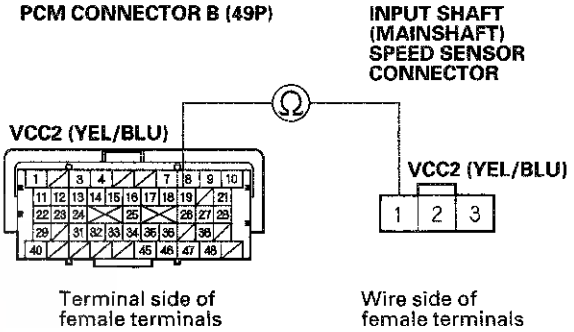

Is there continuity?

YES—Go to step 32.

NO—Repair open in the wire between PCM connector terminal B19 and the input shaft (mainshaft) speed sensor, then go to step 26.

25. Check for continuity between PCM connector terminal B34 and input shaft (mainshaft) speed sensor connector terminal No. 3.

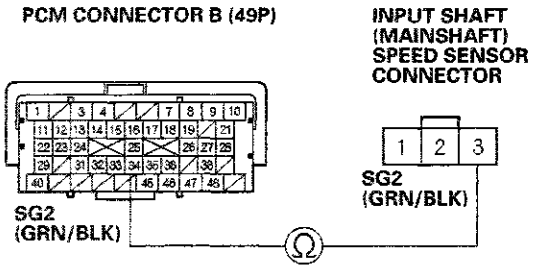

Terminal side of female terminals

Wire side of female terminals

Is there continuity?

YES—Go to step 32.

NO—Repair open in the wire between PCM connector terminal B34 and the input shaft (mainshaft) speed sensor, then go to step 26.

26. Reconnect all connectors.

27. Turn the ignition switch to ON (II).

28. Clear the DTC with the HDS.

29. Start the engine, disable the VSA by pressing the VSA OFF switch, run the vehicle with the shift lever in D, at speeds over 12 mph (20 km/h) for at least 10 seconds. Slow down and stop the wheels.

30. Check for Temporary DTCs or DTCs with the HDS.

    Is DTC P0716 or P0717 indicated?

    YES—Check for poor connections or loose terminals between the input shaft (mainshaft) speed sensor and the PCM, then go to step 1.

    NO—Go to step 31.

31. Monitor the OBD STATUS for P0716 or P0717 in the DTCs MENU with the HDS.

    Does the HDS indicate PASSED?

    YES—Troubleshooting is complete. If any other Temporary DTCs or DTCs were indicated in step 30, go to the indicated DTC's troubleshooting. ■

    NO—If the HDS indicates FAILED, check for poor connections or loose terminals between the input shaft (mainshaft) speed sensor and the PCM, then go to step 1. If the HDS indicates NOT COMPLETED, go to step 29.

32. Reconnect all connectors.

33. Update the PCM if it does not have the latest software (see page 11-215), or substitute a known-good PCM (see page 14-8).

34. Start the engine, disable the VSA by pressing the VSA OFF switch, run the vehicle with the shift lever in D, at speeds over 12 mph (20 km/h) for at least 10 seconds. Slow down and stop the wheels.

(cont'd)

DTC Troubleshooting (cont'd)

35. Check for Temporary DTCs or DTCs with the HDS.

    Is DTC P0716 or P0717 indicated?

    YES—Check for poor connections or loose terminals between the input shaft (mainshaft) speed sensor and the PCM. If the PCM was updated, substitute a known-good PCM (see page 14-8), then go to step 34. If the PCM was substituted, go to step 1.

    NO—Go to step 36.

36. Monitor the OBD STATUS for P0716 or P0717 in the DTCs MENU with the HDS.

    Does the HDS indicate PASSED?

    YES—If the PCM was updated, troubleshooting is complete. If the PCM was substituted, replace the original PCM (see page 11-216). If any other Temporary DTCs or DTCs were indicated in step 35, go to the indicated DTC's troubleshooting.■

    NO—If the HDS indicates FAILED, check for poor connections or loose terminals between the input shaft (mainshaft) speed sensor and the PCM. If the PCM was updated, substitute a known-good PCM (see page 14-8), then go to step 34. If the PCM was substituted, go to step 1. If the HDS indicates NOT COMPLETED, go to step 34.

DTC P0718: Input Shaft (Mainshaft) Speed Sensor Intermittent Failure

NOTE:
- Before you troubleshoot, record all freeze data and any on-board snapshot with the HDS, and review General Troubleshooting Information (see page 14-4).
- This code is caused by an electrical circuit problem and cannot be caused by a mechanical problem in the transmission.

1. Turn the ignition switch to ON (II).

2. Clear the DTC with the HDS.

3. Test-drive the vehicle with the shift lever in D at speeds over 12 mph (20 km/h), and let the transmission shift through all five gears.

4. Monitor the OBD STATUS for P0718 in the DTCs MENU with the HDS.

   Does the HDS indicate FAILED?

   YES—Go to step 5.

   NO—If the HDS indicates PASSED, intermittent failure, the system is OK at this time. Check for poor connections or loose terminals between the input shaft (mainshaft) speed sensor and the PCM. If the HDS indicates NOT COMPLETED, go to step 3.

5. Turn the ignition switch to LOCK (0).

6. Disconnect the input shaft (mainshaft) speed sensor connector, and inspect the connector and connector terminals to be sure they are making good contact.

   Are the connector terminals OK?

   YES—Go to step 7.

   NO—Repair the connector terminals, then go to step 24.

7. Turn the ignition switch to LOCK (0).

8. Jump the SCS line with the HDS.

9. Disconnect PCM connector C (49P).

10. Check for continuity between PCM connector terminal C44 and body ground, and between terminal C48 and body ground.

PCM CONNECTOR C (49P)

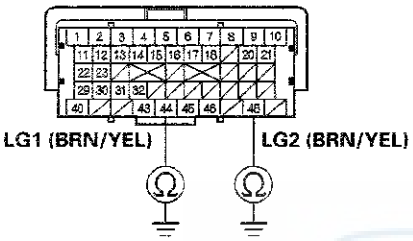

Terminal side of female terminals

Is there continuity?

YES—Go to step 11.

NO—Repair open in the wires between PCM connector terminals C44, C48, and body ground (G101) (see page 22-22), or repair poor ground (G101), then go to step 24.

11. Connect PCM connector C (49P).

12. Turn the ignition switch to ON (II).

13. Measure the voltage between input shaft (mainshaft) speed sensor connector terminal No. 1 and body ground.

INPUT SHAFT (MAINSHAFT) SPEED SENSOR CONNECTOR

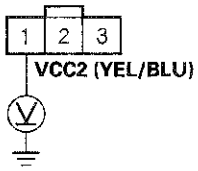

Wire side of female terminals

Is there about 5 V?

YES—Go to step 14.

NO—Go to step 20.

(cont'd)

DTC Troubleshooting (cont'd)

14. Measure the voltage between input shaft (mainshaft) speed sensor connector terminal No. 2 and body ground.

INPUT SHAFT (MAINSHAFT) SPEED SENSOR CONNECTOR

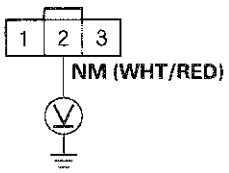

Wire side of female terminals

Is there about 5 V?

YES—Replace the input shaft (mainshaft) speed sensor (see page 14-226), then go to step 24.

NO—Go to step 15.

15. Turn the ignition switch to LOCK (0).

16. Jump the SCS line with the HDS.

17. Disconnect PCM connector B (49P).

18. Check for continuity between input shaft (mainshaft) speed sensor connector terminal No. 2 and body ground.

INPUT SHAFT (MAINSHAFT) SPEED SENSOR CONNECTOR

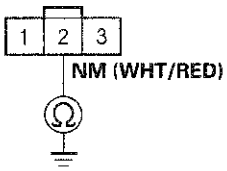

Wire side of female terminals

Is there continuity?

YES—Repair short to body ground in the wire between PCM connector terminal B18 and the input shaft (mainshaft) speed sensor, then go to step 24.

NO—Go to step 19.

19. Check for continuity between PCM connector terminal B18 and input shaft (mainshaft) speed sensor connector terminal No. 2.

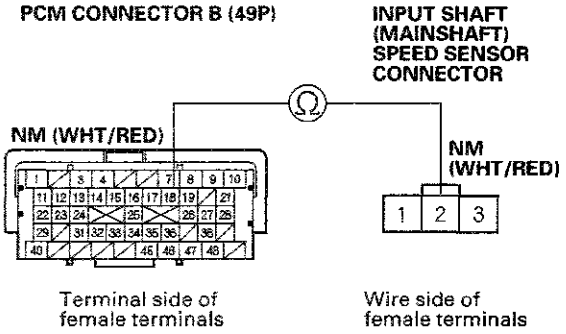

Is there continuity?

YES—Go to step 30.

NO—Repair open in the wire between PCM connector terminal B18 and the input shaft (mainshaft) speed sensor, then go to step 24.

20. Turn the ignition switch to LOCK (0).

21. Jump the SCS line with the HDS.

22. Disconnect PCM connector B (49P).

23. Check for continuity between PCM connector terminal B19 and input shaft (mainshaft) speed sensor connector terminal No. 1.

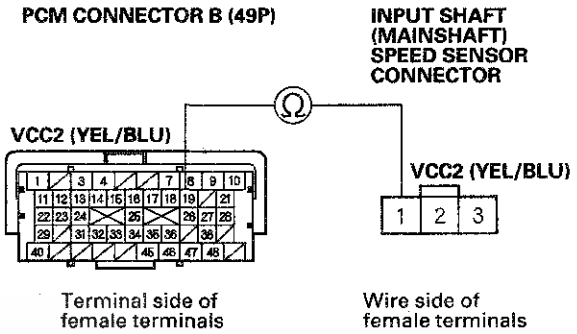

Is there continuity?

YES—Go to step 30.

NO—Repair open in the wire between PCM connector terminal B19 and the input shaft (mainshaft) speed sensor, then go to step 24.

(cont'd)

DTC Troubleshooting (cont'd)

24. Reconnect all connectors.

25. Turn the ignition switch to ON (II).

26. Clear the DTC with the HDS.

27. Test-drive the vehicle with the shift lever in D at speeds over 12 mph (20 km/h), and let the transmission shift through all five gears.

28. Check for Temporary DTCs or DTCs with the HDS.

    Is DTC P0718 indicated?

    YES—Check for poor connections or loose terminals between the input shaft (mainshaft) speed sensor and the PCM, then go to step 1.

    NO—Go to step 29.

29. Monitor the OBD STATUS for P0718 in the DTCs MENU with the HDS.

    Does the HDS indicate PASSED?

    YES—Troubleshooting is complete. If any other Temporary DTCs or DTCs were indicated in step 28, go to the indicated DTC's troubleshooting.■

    NO—If the HDS indicates FAILED, check for poor connections or loose terminals between the input shaft (mainshaft) speed sensor and the PCM, then go to step 1. If the HDS indicates NOT COMPLETED, go to step 27.

30. Reconnect all connectors.

31. Update the PCM if it does not have the latest software (see page 11-215), or substitute a known-good PCM (see page 14-8).

32. Test-drive the vehicle with the shift lever in D at speeds over 12 mph (20 km/h), and let the transmission shift through all five gears.

33. Check for Temporary DTCs or DTCs with the HDS.

    Is DTC P0718 indicated?

    YES—Check for poor connections or loose terminals between the input shaft (mainshaft) speed sensor and the PCM. If the PCM was updated, substitute a known-good PCM (see page 14-8), then go to step 32. If the PCM was substituted, go to step 1.

    NO—Go to step 34.

34. Monitor the OBD STATUS for P0718 in the DTCs MENU with the HDS.

    Does the HDS indicate PASSED?

    YES—If the PCM was updated, troubleshooting is complete. If the PCM was substituted, replace the original PCM (see page 11-216). If any other Temporary DTCs or DTCs were indicated in step 33, go to the indicated DTC's troubleshooting.■

    NO—If the HDS indicates FAILED, check for poor connections or loose terminals between the input shaft (mainshaft) speed sensor and the PCM. If the PCM was updated, substitute a known-good PCM (see page 14-8), then go to step 32. If the PCM was substituted, go to step 1. If the HDS indicates NOT COMPLETED, go to step 32.

DTC P0721: Problem in Output Shaft (Countershaft) Speed Sensor Circuit

DTC P0722: Problem in Output Shaft (Countershaft) Speed Sensor Circuit (No Signal Input)

NOTE:
- Before you troubleshoot, record all freeze data and any on-board snapshot with the HDS, and review General Troubleshooting Information (see page 14-4).
- This code is caused by an electrical circuit problem and cannot be caused by a mechanical problem in the transmission.

1. Check for proper output shaft (countershaft) speed sensor installation (see page 14-226).

2. Turn the ignition switch to ON (II).

3. Clear the DTC with the HDS.

4. Raise the front of the vehicle, make sure it is securely supported, and allow the front wheels to rotate freely, or raise the vehicle on a lift.

5. Start the engine, disable the VSA by pressing the VSA OFF switch, run the vehicle with the shift lever in D, with the engine speed above 2,000 rpm for at least 10 seconds. Slow down and stop the wheels.

6. Monitor the OBD STATUS for P0721 or P0722 in the DTCs MENU with the HDS.

   Does the HDS indicate FAILED?

   YES—Go to step 7.

   NO—If the HDS indicates PASSED, intermittent failure, the system is OK at this time. Check for poor connections or loose terminals between the output shaft (countershaft) speed sensor and the PCM. If the HDS indicates NOT COMPLETED, go to step 5.

7. Turn the ignition switch to LOCK (0).

8. Jump the SCS line with the HDS.

9. Disconnect PCM connector C (49P).

10. Check for continuity between PCM connector terminal C44 and body ground, and between terminal C48 and body ground.

PCM CONNECTOR C (49P)

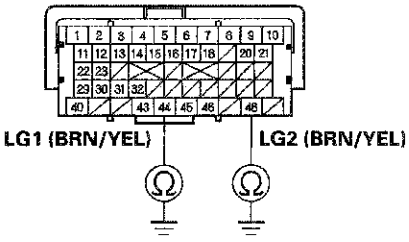

Terminal side of female terminals

Is there continuity?

YES—Go to step 11.

NO—Repair open in the wires between PCM connector terminals C44, C48, and body ground (G101) (see page 22-22), or repair a poor ground (G101), then go to step 26.

(cont'd)

DTC Troubleshooting (cont'd)

11. Connect PCM connector C (49P).

12. Disconnect the output shaft (countershaft) speed sensor connector.

13. Turn the ignition switch to ON (II).

14. Measure the voltage between output shaft (countershaft) speed sensor connector terminal No. 1 and body ground.

OUTPUT SHAFT (COUNTERSHAFT) SPEED SENSOR CONNECTOR

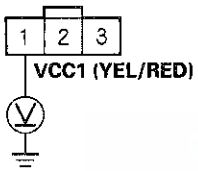

Wire side of female terminals

Is there about 5 V?

YES—Go to step 15.

NO—Go to step 21.

15. Measure the voltage between output shaft (countershaft) speed sensor connector terminals No. 2 and No. 3.

OUTPUT SHAFT (COUNTERSHAFT) SPEED SENSOR CONNECTOR

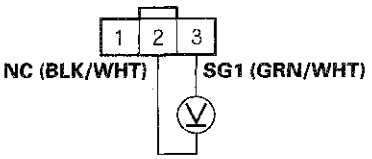

Wire side of female terminals

Is there about 5 V?

YES—Replace the output shaft (countershaft) speed sensor (see page 14-226), then go to step 26.

NO—Go to step 16.

16. Turn the ignition switch to LOCK (0).

17. Jump the SCS line with the HDS.

18. Disconnect PCM connector B (49P).

19. Check for continuity between output shaft (countershaft) speed sensor connector terminal No. 2 and body ground.

OUTPUT SHAFT (COUNTERSHAFT) SPEED SENSOR CONNECTOR

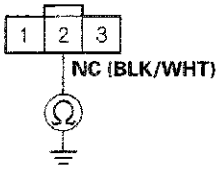

Wire side of female terminals

Is there continuity?

YES—Repair short to body ground in the wire between PCM connector terminal B38 and the output shaft (countershaft) speed sensor, then go to step 26.

NO—Go to step 20.

20. Check for continuity between PCM connector terminal B38 and output shaft (countershaft) speed sensor connector terminal No. 2.

PCM CONNECTOR B (49P)

OUTPUT SHAFT (COUNTERSHAFT) SPEED SENSOR CONNECTOR

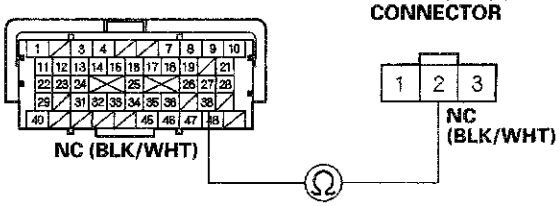

Terminal side of female terminals

Wire side of female terminals

Is there continuity?

YES—Go to step 32.

NO—Repair open in the wire between PCM connector terminal B38 and the output shaft (countershaft) speed sensor, then go to step 26.

(cont'd)

DTC Troubleshooting (cont'd)

21. Turn the ignition switch to LOCK (0).

22. Jump the SCS line with the HDS.

23. Disconnect PCM connector C (49P).

24. Check for continuity between PCM connector terminal C13 and output shaft (countershaft) speed sensor connector terminal No. 1.

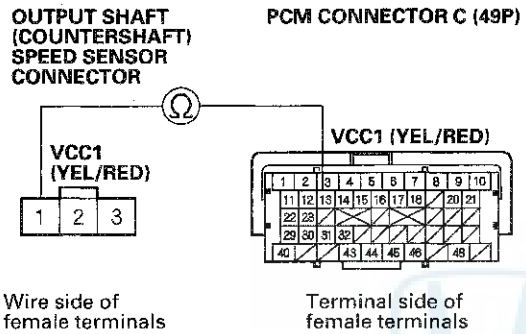

Is there continuity?

YES—Go to step 32.

NO—Repair open in the wire between PCM connector terminal C13 and the output shaft (countershaft) speed sensor, then go to step 26.

25. Check for continuity between PCM connector terminal C14 and output shaft (countershaft) speed sensor connector terminal No. 3.

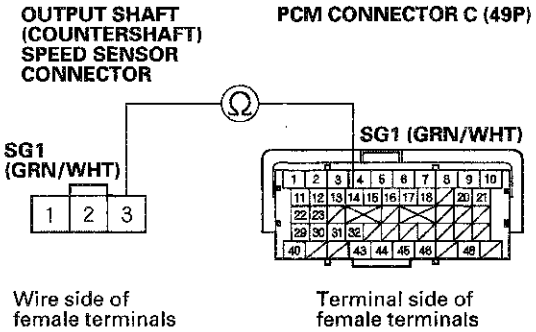

Is there continuity?

YES—Go to step 32.

NO—Repair open in the wire between the output shaft (countershaft) speed sensor connector and PCM connector terminal C14, then go to step 26.

26. Reconnect all connectors.

27. Turn the ignition switch to ON (II).

28. Clear the DTC with the HDS.

29. Start the engine, disable the VSA by pressing the VSA OFF switch, run the vehicle with the shift lever in D at speeds over 12 mph (20 km/h) for at least 10 seconds. Slow down and stop the wheels.

30. Check for Temporary DTCs or DTCs with the HDS.

    Is DTC P0721 or P0722 indicated?

    YES—Check for poor connections or loose terminals between the input shaft (mainshaft) speed sensor and the PCM, then go to step 1.

    NO—Go to step 31.

31. Monitor the OBD STATUS for P0721 or P0722 in the DTCs MENU with the HDS.

    Does the HDS indicate PASSED?

    YES—Troubleshooting is complete. If any other Temporary DTCs or DTCs were indicated in step 30, go to the indicated DTC's troubleshooting. ■

    NO—If the HDS indicates FAILED, check for poor connections or loose terminals between the input shaft (mainshaft) speed sensor and the PCM, then go to step 1. If the HDS indicates NOT COMPLETED, go to step 29.

32. Reconnect all connectors.

33. Update the PCM if it does not have the latest software (see page 11-215), or substitute a known-good PCM (see page 14-8).

34. Start the engine, disable the VSA by pressing the VSA OFF switch, run the vehicle with the shift lever in D at speeds over 12 mph (20 km/h) for at least 10 seconds. Slow down and stop the wheels.

35. Check for Temporary DTCs or DTCs with the HDS.

    Is DTC P0721 or P0722 indicated?

    YES—Check for poor connections or loose terminals between the input shaft (mainshaft) speed sensor and the PCM. If the PCM was updated, substitute a known-good PCM (see page 14-8), then go to step 34. If the PCM was substituted, go to step 1.

    NO—Go to step 36.

36. Monitor the OBD STATUS for P0721 or P0722 in the DTCs MENU with the HDS.

    Does the HDS indicate PASSED?

    YES—If the PCM was updated, troubleshooting is complete. If the PCM was substituted, replace the original PCM (see page 11-216). If any other Temporary DTCs or DTCs were indicated in step 35, go to the indicated DTC's troubleshooting. ■

    NO—If the HDS indicates FAILED, check for poor connections or loose terminals between the input shaft (mainshaft) speed sensor and the PCM. If the PCM was updated, substitute a known-good PCM (see page 14-8), then go to step 34. If the PCM was substituted, go to step 1. If the HDS indicates NOT COMPLETED, go to step 34.

DTC Troubleshooting (cont'd)

DTC P0723: Output Shaft (Countershaft) Speed Sensor Intermittent Failure

NOTE:
- Before you troubleshoot, record all freeze data and any on-board snapshot with the HDS, and review General Troubleshooting Information (see page 14-4).
- This code is caused by an electrical circuit problem and cannot be caused by a mechanical problem in the transmission.

1. Turn the ignition switch to ON (II).

2. Clear the DTC with the HDS.

3. Test-drive the vehicle with the shift lever in D, with the engine speed above 2,000 rpm, and let the transmission shift through all five gears.

4. Monitor the OBD STATUS for P0723 in the DTCs MENU with the HDS.

   Does the HDS indicate FAILED?

   YES—Go to step 5.

   NO—If the HDS indicates PASSED, intermittent failure, the system is OK at this time. Check for poor connections or loose terminals between the output shaft (countershaft) speed sensor and the PCM. If the HDS indicates NOT COMPLETED, go to step 3.

5. Turn the ignition switch to LOCK (0).

6. Disconnect the output shaft (countershaft) speed sensor connector, and inspect the connector and connector terminals to be sure they are making good contact.

   Are the connector terminals OK?

   YES—Go to step 7.

   NO—Repair the connector terminals, then go to step 24.

7. Turn the ignition switch to LOCK (0).

8. Jump the SCS line with the HDS.

9. Disconnect PCM connector C (49P).

10. Check for continuity between PCM connector terminal C44 and body ground, and between terminal C48 and body ground.

PCM CONNECTOR C (49P)

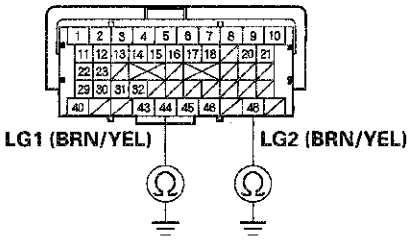

Terminal side of female terminals

Is there continuity?

YES—Go to step 11.

NO—Repair open in the wires between PCM connector terminals C44, C48, and body ground (G101) (see page 22-22), or repair poor ground (G101), then go to step 24.

11. Connect PCM connector C (49P).

12. Turn the ignition switch to ON (II).

13. Measure the voltage between output shaft (countershaft) speed sensor connector terminal No. 1 and body ground.

OUTPUT SHAFT (COUNTERSHAFT) SPEED SENSOR CONNECTOR

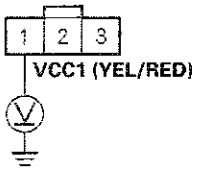

Wire side of female terminals

Is there about 5 V?

YES—Go to step 14.

NO—Go to step 20.

14. Measure the voltage between output shaft (countershaft) speed sensor connector terminal No. 2 and body ground.

OUTPUT SHAFT (COUNTERSHAFT) SPEED SENSOR CONNECTOR

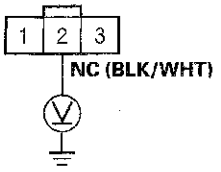

Wire side of female terminals

Is there about 5 V?

YES—Replace the output shaft (countershaft) speed sensor (see page 14-226), then go to step 24.

NO—Go to step 15.

(cont'd)

DTC Troubleshooting (cont'd)

15. Turn the ignition switch to LOCK (0).

16. Jump the SCS line with the HDS.

17. Disconnect PCM connector B (49P).

18. Check for continuity between output shaft (countershaft) speed sensor connector terminal No. 2 and body ground.

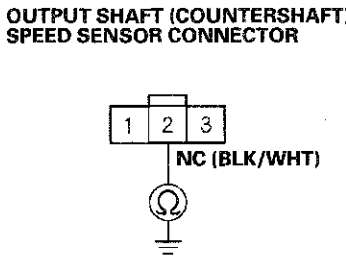

Wire side of female terminals

Is there continuity?

YES—Repair short to body ground in the wire between PCM connector terminal B38 and the output shaft (countershaft) speed sensor, then go to step 24.

NO—Go to step 19.

19. Check for continuity between PCM connector terminal B38 and output shaft (countershaft) speed sensor connector terminal No. 2.

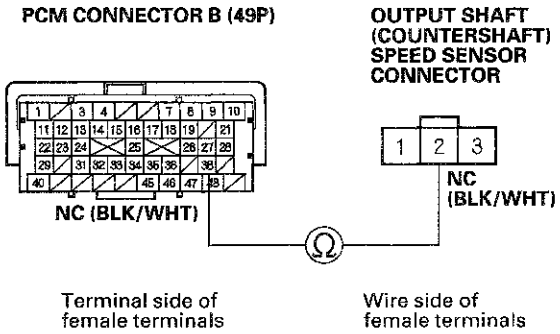

Is there continuity?

YES—Go to step 30.

NO—Repair open in the wire between PCM connector terminal B38 and the output shaft (countershaft) speed sensor, then go to step 24.

20. Turn the ignition switch to LOCK (0).

21. Jump the SCS line with the HDS.

22. Disconnect PCM connector C (49P).

23. Check for continuity between PCM connector terminal C13 and output shaft (countershaft) speed sensor connector terminal No. 1.

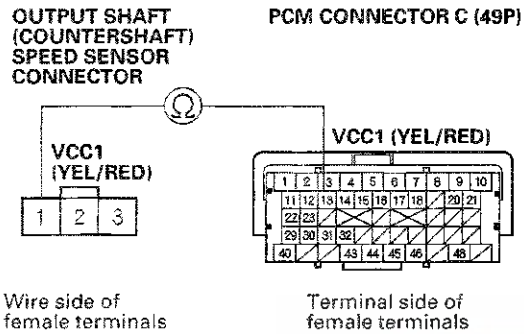

Is there continuity?

YES—Go to step 30.

NO—Repair open in the wire between PCM connector terminal C13 and the output shaft (countershaft) speed sensor, then go to step 24.

24. Reconnect all connectors.

25. Turn the ignition switch to ON (II).

26. Clear the DTC with the HDS.

27. Test-drive the vehicle with the shift lever in D at speeds over 12 mph (20 km/h), and let the transmission shift through all five gears.

28. Check for Temporary DTCs or DTCs with the HDS.

Is DTC P0723 indicated?

YES—Check for poor connections or loose terminals between the output shaft (countershaft) speed sensor and the PCM, then go to step 1.

NO—Go to step 29.

29. Monitor the OBD STATUS for P0723 in the DTCs MENU with the HDS.

Does the HDS indicate PASSED?

YES—Troubleshooting is complete. If any other Temporary DTCs or DTCs were indicated in step 28, go to the indicated DTC's troubleshooting. ■

NO—If the HDS indicates FAILED, check for poor connections or loose terminals between the output shaft (countershaft) speed sensor and the PCM, then go to step 1. If the HDS indicates NOT COMPLETED, go to step 27.

(cont'd)

DTC Troubleshooting (cont'd)

30. Reconnect all connectors.

31. Update the PCM if it does not have the latest software (see page 11-215), or substitute a known-good PCM (see page 14-8).

32. Test-drive the vehicle with the shift lever in D at speeds over 12 mph (20 km/h), and let the transmission shift through all five gears.

33. Check for Temporary DTCs or DTCs with the HDS.

    Is DTC P0723 indicated?

    YES—Check for poor connections or loose terminals between the output shaft (countershaft) speed sensor and the PCM. If the PCM was updated, substitute a known-good PCM (see page 14-8), then go to step 32. If the PCM was substituted, go to step 1.

    NO—Go to step 34.

34. Monitor the OBD STATUS for P0723 in the DTCs MENU with the HDS.

    Does the HDS indicate PASSED?

    YES—If the PCM was updated, troubleshooting is complete. If the PCM was substituted, replace the original PCM (see page 11-216). If any other Temporary DTCs or DTCs were indicated in step 33, go to the indicated DTC's troubleshooting. ■

    NO—If the HDS indicates FAILED, check for poor connections or loose terminals between the output shaft (countershaft) speed sensor and the PCM. If the PCM was updated, substitute a known-good PCM (see page 14-8), then go to step 32. If the PCM was substituted, go to step 1. If the HDS indicates NOT COMPLETED, go to step 32.

DTC P0731: Problem in 1st Clutch and 1st Clutch Hydraulic Circuit (1st Gear Incorrect Ratio)

NOTE: Before you troubleshoot, record all freeze data and any on-board snapshot with the HDS, and review General Troubleshooting Information (see page 14-4).

1. Warm up the engine to normal operating temperature (the radiator fan comes on).

2. Make sure that the transmission is filled to the proper level, and check for fluid leaks.

3. Drain the ATF (see step 3 on page 14-231) through a strainer. Inspect the strainer for metal debris or excessive clutch material.

   Does the strainer have metal debris or excessive clutch material?

   YES—Replace the transmission, then go to step 12.

   NO—Replace the ATF (see page 14-231), then go to step 4.

4. Test stall speed in D (see page 14-208).

   Does the stall speed test within the service limits?

   YES—Go to step 5.

   NO—Shift valves A and D are stuck. Repair these valves and the hydraulic circuit, or replace the transmission, then go to step 12.

5. Measure the line pressure (see page 14-209).

   Is the line pressure within the service limit?

   YES—Go to step 6.

   NO—Repair the ATF pump and the regulator valve, or replace the transmission, then go to step 12.

6. Measure the 1st clutch pressure (see page 14-209).

   Is the 1st clutch pressure within the service limits?

   YES—Go to step 7.

   NO—Shift valves B and C are stuck. Repair these valves and the hydraulic circuit, or replace the transmission, then go to step 12.

7. Turn the ignition switch to ON (II).

8. Clear the DTC with the HDS.

9. Test-drive the vehicle in 1st gear, with the shift lever in D, at speeds over 7 mph (12 km/h), and with the engine speed above 1,000 rpm for at least 12 seconds.

10. Check for Temporary DTCs or DTCs with the HDS.

    Is DTC P0731 indicated?

    YES—Repair the 1st clutch, or replace the transmission, then go to step 12.

    NO—Go to step 11.

11. Monitor the OBD STATUS for P0731 in the DTCs MENU with the HDS.

    Does the HDS indicate PASSED?

    YES—Troubleshooting is complete. If any other Temporary DTCs or DTCs were indicated in step 10, go to the indicated DTC's troubleshooting. ■

    NO—If the HDS indicates FAILED, repair the 1st clutch, or replace the transmission, then go to step 12. If the HDS indicates NOT COMPLETED, go to step 9.

12. Test-drive the vehicle in 1st gear, with the shift lever in D, at speeds over 7 mph (12 km/h), and with the engine speed above 1,000 rpm for at least 12 seconds.

13. Check for Temporary DTCs or DTCs with the HDS.

    Is DTC P0731 indicated?

    YES—Check for poor connections or loose terminals between the input shaft (mainshaft) speed sensor and the output shaft (countershaft) speed sensor and the PCM, then go to step 4.

    NO—Go to step 14.

14. Monitor the OBD STATUS for P0731 in the DTCs MENU with the HDS.

    Does the HDS indicate PASSED?

    YES—Troubleshooting is complete. If any other Temporary DTCs or DTCs were indicated in step 13, go to the indicated DTC's troubleshooting. ■

    NO—If the HDS indicates FAILED, check for poor connections or loose terminals between the input shaft (mainshaft) speed sensor and the output shaft (countershaft) speed sensor and the PCM, then go to step 4. If the HDS indicates NOT COMPLETED, go to step 12.

DTC Troubleshooting (cont'd)

DTC P0732: Problem in 2nd Clutch and 2nd Clutch Hydraulic Circuit (2nd Gear Incorrect Ratio)

NOTE: Before you troubleshoot, record all freeze data and any on-board snapshot with the HDS, and review General Troubleshooting Information (see page 14-4).

1. Warm up the engine to normal operating temperature (the radiator fan comes on).

2. Make sure that the transmission is filled to the proper level, and check for fluid leaks.

3. Drain the ATF (see step 3 on page 14-231) through a strainer. Inspect the strainer for metal debris or excessive clutch material.

   Does the strainer have metal debris or excessive clutch material?

   YES—Replace the transmission, then go to step 12.

   NO—Replace the ATF (see page 14-231), then go to step 4.

4. Test stall speed in D (see page 14-208).

   Is the stall speed within the service limits?

   YES—Go to step 5.

   NO—Shift valve C is stuck. Repair shift valve C and the hydraulic circuit, or replace the transmission, then go to step 12.

5. Measure the line pressure (see page 14-209).

   Is the line pressure within the service limit?

   YES—Go to step 6.

   NO—Repair the ATF pump and the regulator valve, or replace the transmission, then go to step 12.

6. Measure the 2nd clutch pressure (see page 14-209).

   Is the 2nd clutch pressure within the service limits?

   YES—Go to step 7.

   NO—Shift valves A and B are stuck. Repair these valves and the hydraulic circuit, or replace the transmission, then go to step 12.

7. Turn the ignition switch to ON (II).

8. Clear the DTC with the HDS.

9. Test-drive the vehicle in 2nd gear, with the shift lever in D, at speeds over 7 mph (12 km/h), and with the engine speed above 1,000 rpm for at least 12 seconds.

10. Check for Temporary DTCs or DTCs with the HDS.

    Is DTC P0732 indicated?

    YES—Repair the 2nd clutch, or replace the transmission, then go to step 12.

    NO—Go to step 11.

11. Monitor the OBD STATUS for P0732 in the DTCs MENU with the HDS.

    Does the HDS indicate PASSED?

    YES—Troubleshooting is complete. If any other Temporary DTCs or DTCs were indicated in step 10, go to the indicated DTC's troubleshooting.■

    NO—If the HDS indicates FAILED, repair the 2nd clutch, or replace the transmission, then go to step 12. If the HDS indicates NOT COMPLETED, go to step 9.

12. Test-drive the vehicle in 2nd gear, with the shift lever in D, at speeds over 7 mph (12 km/h), and with the engine speed above 1,000 rpm for at least 12 seconds.

13. Check for Temporary DTCs or DTCs with the HDS.

    Is DTC P0732 indicated?

    YES—Check for poor connections or loose terminals between the input shaft (mainshaft) speed sensor and the output shaft (countershaft) speed sensor and the PCM, then go to step 4.

    NO—Go to step 14.

14. Monitor the OBD STATUS for P0732 in the DTCs MENU with the HDS.

    Does the HDS indicate PASSED?

    YES—Troubleshooting is complete. If any other Temporary DTCs or DTCs were indicated in step 13, go to the indicated DTC's troubleshooting.■

    NO—If the HDS indicates FAILED, check for poor connections or loose terminals between the input shaft (mainshaft) speed sensor and the output shaft (countershaft) speed sensor and the PCM, then go to step 4. If the HDS indicates NOT COMPLETED, go to step 12.

DTC P0733: Problem in 3rd Clutch and 3rd Clutch Hydraulic Circuit (3rd Gear Incorrect Ratio)

NOTE: Before you troubleshoot, record all freeze data and any on-board snapshot with the HDS, and review General Troubleshooting Information (see page 14-4).

1. Warm up the engine to normal operating temperature (the radiator fan comes on).

2. Make sure that the transmission is filled to the proper level, and check for fluid leaks.

3. Drain the ATF (see step 3 on page 14-231) through a strainer. Inspect the strainer for metal debris or excessive clutch material.

   Does the strainer have metal debris or excessive clutch material?

   YES—Replace the transmission, then go to step 11.

   NO—Replace the ATF (see page 14-231), then go to step 4.

4. Measure the line pressure (see page 14-209).

   Is the line pressure within the service limits?

   YES—Go to step 5.

   NO—Repair the ATF pump and the regulator valve, or replace the transmission, then go to step 11.

5. Measure the 3rd clutch pressure (see page 14-209).

   Is the 3rd clutch pressure within the service limits?

   YES—Go to step 6.

   NO—Shift valves A and D are stuck. Repair these valves and the hydraulic circuit, or replace the transmission, then go to step 11.

(cont'd)

DTC Troubleshooting (cont'd)

6. Turn the ignition switch to ON (II).

7. Clear the DTC with the HDS.

8. Test-drive the vehicle in 3rd gear, with the shift lever in D, at speeds over 7 mph (12 km/h), and with the engine speed above 1,000 rpm for at least 12 seconds.

9. Check for Temporary DTCs or DTCs with the HDS.

   Is DTC P0733 indicated?

   YES—Repair the 3rd clutch, or replace the transmission, then go to step 11.

   NO—Go to step 10.

10. Monitor the OBD STATUS for P0733 in the DTCs MENU with the HDS.

    Does the HDS indicate PASSED?

    YES—Troubleshooting is complete. If any other Temporary DTCs or DTCs were indicated in step 9, go to the indicated DTC's troubleshooting. ■

    NO—If the HDS indicates FAILED, repair the 3rd clutch, or replace the transmission, then go to step 11. If the HDS indicates NOT COMPLETED, go to step 8.

11. Test-drive the vehicle in 3rd gear, with the shift lever in D, at speeds over 7 mph (12 km/h), and with the engine speed above 1,000 rpm for at least 12 seconds.

12. Check for Temporary DTCs or DTCs with the HDS.

    Is DTC P0733 indicated?

    YES—Check for poor connections or loose terminals between the input shaft (mainshaft) speed sensor and the output shaft (countershaft) speed sensor and the PCM, then go to step 4.

    NO—Go to step 13.

13. Monitor the OBD STATUS for P0733 in the DTCs MENU with the HDS.

    Does the HDS indicate PASSED?

    YES—Troubleshooting is complete. If any other Temporary DTCs or DTCs were indicated in step 12, go to the indicated DTC's troubleshooting. ■

    NO—If the HDS indicates FAILED, check for poor connections or loose terminals between the input shaft (mainshaft) speed sensor and the output shaft (countershaft) speed sensor and the PCM, then go to step 4. If the HDS indicates NOT COMPLETED, go to step 11.

DTC P0734: Problem in 4th Clutch and 4th Clutch Hydraulic Circuit (4th Gear Incorrect Ratio)

NOTE: Before you troubleshoot, record all freeze data and any on-board snapshot with the HDS, and review General Troubleshooting Information (see page 14-4).

1. Warm up the engine to normal operating temperature (the radiator fan comes on).

2. Make sure that the transmission is filled to the proper level, and check for fluid leaks.

3. Drain the ATF (see step 3 on page 14-231) through a strainer. Inspect the strainer for metal debris or excessive clutch material.

   Does the strainer have metal debris or excessive clutch material?

   YES—Replace the transmission, then go to step 11.

   NO—Replace the ATF (see page 14-231), then go to step 4.

4. Measure the line pressure (see page 14-209).

   Is the line pressure within the service limits?

   YES—Go to step 5.

   NO—Repair the ATF pump and the regulator valve, or replace the transmission, then go to step 11.

5. Measure the 4th clutch pressure (see page 14-209).

   Is the 4th clutch pressure within the service limits?

   YES—Go to step 6.

   NO—Shift valves B and C, and the servo control valve are stuck. Repair these valves and the hydraulic circuit, or replace the transmission, then go to step 11.

6. Turn the ignition switch to ON (II).

7. Clear the DTC with the HDS.

8. Test-drive the vehicle in 4th gear, with the shift lever in D, at speeds over 7 mph (12 km/h), and with the engine speed above 1,000 rpm for at least 12 seconds.

9. Check for Temporary DTCs or DTCs with the HDS.

   Is DTC P0734 indicated?

   YES—Repair the 4th clutch, or replace the transmission, then go to step 11.

   NO—Go to step 10.

(cont'd)

DTC Troubleshooting (cont'd)

10. Monitor the OBD STATUS for P0734 in the DTCs MENU with the HDS.

    Does the HDS indicate PASSED?

    YES—Troubleshooting is complete. If any other Temporary DTCs or DTCs were indicated in step 9, go to the indicated DTC's troubleshooting. ■

    NO—If the HDS indicates FAILED, repair the 4th clutch, or replace the transmission, then go to step 11. If the HDS indicates NOT COMPLETED, go to step 8.

11. Test-drive the vehicle in 4th gear, with the shift lever in D, at speeds over 7 mph (12 km/h), and with the engine speed above 1,000 rpm for at least 12 seconds.

12. Check for Temporary DTCs or DTCs with the HDS.

    Is DTC P0734 indicated?

    YES—Check for poor connections or loose terminals between the input shaft (mainshaft) speed sensor and the output shaft (countershaft) speed sensor and the PCM, then go to step 4.

    NO—Go to step 13.

13. Monitor the OBD STATUS for P0734 in the DTCs MENU with the HDS.

    Does the HDS indicate PASSED?

    YES—Troubleshooting is complete. If any other Temporary DTCs or DTCs were indicated in step 12, go to the indicated DTC's troubleshooting. ■

    NO—If the HDS indicates FAILED, check for poor connections or loose terminals between the input shaft (mainshaft) speed sensor and the output shaft (countershaft) speed sensor and the PCM, then go to step 4. If the HDS indicates NOT COMPLETED, go to step 11.

DTC P0735: Problem in 5th Clutch and 5th Clutch Hydraulic Circuit (5th Gear Incorrect Ratio)

NOTE: Before you troubleshoot, record all freeze data and any on-board snapshot with the HDS, and review General Troubleshooting Information (see page 14-4).

1. Warm up the engine to normal operating temperature (the radiator fan comes on).

2. Make sure that the transmission is filled to the proper level, and check for fluid leaks.

3. Drain the ATF (see step 3 on page 14-231) through a strainer. Inspect the strainer for metal debris or excessive clutch material.

   Does the strainer have metal debris or excessive clutch material?

   YES—Replace the transmission, then go to step 11.

   NO—Replace the ATF (see page 14-231), then go to step 4.

4. Measure the line pressure (see page 14-209).

   Is the line pressure within the service limits?

   YES—Go to step 5.

   NO—Repair the ATF pump and the regulator valve, or replace the transmission, then go to step 11.

5. Measure the 5th clutch pressure (see page 14-209).

   Is the 5th clutch pressure within the service limits?

   YES—Go to step 6.

   NO—Shift valves A, B, and/or D are stuck. Repair these valves and the hydraulic circuit, or replace the transmission, then go to step 11.

6. Turn the ignition switch to ON (II).

7. Clear the DTC with the HDS.

8. Test-drive the vehicle in 5th gear, with the shift lever in D, at speeds over 7 mph (12 km/h), and with the engine speed above 1,000 rpm for at least 12 seconds.

9. Check for Temporary DTCs or DTCs with the HDS.

   Is DTC P0735 indicated?

   YES—Repair the 5th clutch, or replace the transmission, then go to step 11.

   NO—Go to step 10.

10. Monitor the OBD STATUS for P0735 in the DTCs MENU with the HDS.

    Does the HDS indicate PASSED?

    YES—Troubleshooting is complete. If any other Temporary DTCs or DTCs were indicated in step 9, go to the indicated DTC's troubleshooting. ■

    NO—If the HDS indicates FAILED, repair the 5th clutch, or replace the transmission, then go to step 11. If the HDS indicates NOT COMPLETED, go to step 8.

11. Test-drive the vehicle in 5th gear, with the shift lever in D, at speeds over 7 mph (12 km/h), and with the engine speed above 1,000 rpm for at least 12 seconds.

12. Check for Temporary DTCs or DTCs with the HDS.

    Is DTC P0735 indicated?

    YES—Check for poor connections or loose terminals between the input shaft (mainshaft) speed sensor and the output shaft (countershaft) speed sensor and the PCM, then go to step 4.

    NO—Go to step 13.

13. Monitor the OBD STATUS for P0735 in the DTCs MENU with the HDS.

    Does the HDS indicate PASSED?

    YES—Troubleshooting is complete. If any other Temporary DTCs or DTCs were indicated in step 12, go to the indicated DTC's troubleshooting. ■

    NO—If the HDS indicates FAILED, check for poor connections or loose terminals between the input shaft (mainshaft) speed sensor and the output shaft (countershaft) speed sensor and the PCM, then go to step 4. If the HDS indicates NOT COMPLETED, go to step 11.

DTC Troubleshooting (cont'd)

DTC P0741: Torque Converter Clutch Hydraulic Circuit Stuck OFF

NOTE: Before you troubleshoot, record all freeze data and any on-board snapshot with the HDS, and review General Troubleshooting Information (see page 14-4).

1. Warm up the engine to normal operating temperature (the radiator fan comes on).

2. Make sure that the transmission is filled to the proper level, and check for fluid leaks.

3. Drain the ATF (see step 3 on page 14-231) through a strainer. Inspect the strainer for metal debris or excessive clutch material.

   Does the strainer have metal debris or excessive clutch material?

   YES—Replace the transmission, then go to step 13.

   NO—Replace the ATF (see page 14-231), then go to step 4.

4. Turn the ignition switch to ON (II).

5. Clear the DTC with the HDS.

6. Select Shift Solenoid Valve E in the Miscellaneous Test Menu, and check that shift solenoid valve E operates with the HDS.

   Is a clicking sound heard?

   YES—Go to step 7.

   NO—Replace shift solenoid valve E (see page 14-216), then go to step 11.

7. Run the engine until the ECT Sensor temperature reaches 176 °F (80 °C).

8. Select Clutch Pressure Control (Linear) Solenoid Valve A in the Miscellaneous Test Menu, and test A/T clutch pressure control solenoid valve A with the HDS.

   Does the HDS indicate NORMAL?

   YES—Go to step 9.

   NO—Follow the instructions indicated on the HDS according to the test result. Go to step 11 if any part is replaced.

9. Test-drive the vehicle on a level road with a steady speed at 60 km/h (96 mph) for at least 20 seconds.

10. Monitor the OBD STATUS for P0741 in the DTCs MENU with the HDS.

    Does the HDS indicate FAILED?

    YES—Repair the faulty torque converter clutch mechanism, the torque converter clutch hydraulic circuit, the lock-up shift valve, or the lock-up control valve, or replace the transmission, then go to step 13.

    NO—If the HDS indicates PASSED, intermittent failure, the system is OK at this time. If the HDS indicates NOT COMPLETED, go to step 9.

11. Turn the ignition switch to ON (II).

12. Clear the DTC with the HDS.

13. Test-drive the vehicle on a level road with a steady speed at 60 mph (96 km/h) for at least 20 seconds, or test-drive the vehicle for several minutes under the same conditions as those indicated by the freeze data.

14. Check for Temporary DTCs or DTCs with the HDS.

    Is DTC P0741 indicated?

    YES—Go to step 5.

    NO—Go to step 15.

15. Monitor the OBD STATUS for P0741 in the DTCs MENU with the HDS.

    Does the HDS indicate PASSED?

    YES—Troubleshooting is complete. If any other Temporary DTCs or DTCs were indicated in step 14, go to the indicated DTC's troubleshooting.■

    NO—If the HDS indicates FAILED, go to step 5. If the HDS indicates NOT COMPLETED, go to step 13.

DTC P0747: A/T Clutch Pressure Control Solenoid Valve A Stuck ON

NOTE: Before you troubleshoot, record all freeze data and any on-board snapshot with the HDS, and review General Troubleshooting Information (see page 14-4).

1. Warm up the engine to normal operating temperature (the radiator fan comes on).

2. Make sure that the transmission is filled to the proper level, and check for fluid leaks.

3. Drain the ATF (see step 3 on page 14-231) through a strainer. Inspect the strainer for metal debris or excessive clutch material.

   Does the strainer have metal debris or excessive clutch material?

   YES—Replace the transmission, then go to step 13.

   NO—Replace the ATF (see page 14-231), then go to step 4.

4. Turn the ignition switch to ON (II).

5. Clear the DTC with the HDS.

6. Test-drive the vehicle with the shift lever in D, and let the transmission shift through all five gears.

7. Monitor the OBD STATUS for P0747 in the DTCs MENU with the HDS.

   Does the HDS indicate FAILED?

   YES—Go to step 8.

   NO—If the HDS indicates PASSED, intermittent failure, the system is OK at this time. If the HDS indicates NOT COMPLETED, go to step 6.

8. Clear the DTC with the HDS.

(cont'd)

DTC Troubleshooting (cont'd)

9. Select Clutch Pressure Control (Linear) Solenoid Valve A in the Miscellaneous Test Menu, and test A/T clutch pressure control solenoid valve A with the HDS.

   Does the HDS indicate NORMAL?

   YES—Intermittent failure, the system is OK at this time.■

   NO—Follow the instructions indicated on the HDS according to the test result, if the HDS has not determined the cause of the failure, go to step 10. If any part is replaced, go to step 11.

10. Inspect A/T clutch pressure control solenoid valve A (see page 14-218).

    Does A/T clutch pressure control solenoid valve A work properly?

    YES—Repair the hydraulic system related to shift valves B and E, or replace the transmission, then go to step 13.

    NO—Replace A/T clutch pressure control solenoid valve A (see page 14-220), then go to step 11.

11. Turn the ignition switch to ON (II).

12. Clear the DTC with the HDS.

13. Test-drive the vehicle with the shift lever in D, and let the transmission shift through all five gears.

14. Check for Temporary DTCs or DTCs with the HDS.

    Is DTC P0747 indicated?

    YES—Go to step 8.

    NO—Go to step 15.

15. Monitor the OBD STATUS for P0747 in the DTCs MENU with the HDS.

    Does the HDS indicate PASSED?

    YES—Troubleshooting is complete. If any other Temporary DTCs or DTCs were indicated in step 14, go to the indicated DTC's troubleshooting.■

    NO—If the HDS indicates FAILED, go to step 8. If the HDS indicates NOT COMPLETED, go to step 13.

DTC P0752: Shift Solenoid Valve A Stuck ON

NOTE: Before you troubleshoot, record all freeze data and any on-board snapshot with the HDS, and review General Troubleshooting Information (see page 14-4).

1. Warm up the engine to normal operating temperature (the radiator fan comes on).

2. Make sure that the transmission is filled to the proper level, and check for fluid leaks.

3. Drain the ATF (see step 3 on page 14-231) through a strainer. Inspect the strainer for metal debris or excessive clutch material.

   Does the strainer have metal debris or excessive clutch material?

   YES—Replace the transmission, then go to step 14.

   NO—Replace the ATF (see page 14-231), then go to step 4.

4. Turn the ignition switch to ON (II).

5. Clear the DTC with the HDS.

6. Test-drive the vehicle with the shift lever in D, and let the transmission shift through all five gears.

7. Monitor the OBD STATUS for P0752 in the DTCs MENU with the HDS.

   Does the HDS indicate FAILED?

   YES—Go to step 8.

   NO—If the HDS indicates PASSED, intermittent failure, the system is OK at this time. If the HDS indicates NOT COMPLETED, go to step 6.

8. Clear the DTC with the HDS.

9. Select Shift Solenoid Valve A in the Miscellaneous Test Menu, and check that shift solenoid valve A operates with the HDS.

   Is a clicking sound heard?

   YES—Go to step 10.

   NO—Replace shift solenoid valve A (see page 14-216), then go to step 12.

10. Test-drive the vehicle with the shift lever in D, and let the transmission shift through all five gears.

11. Monitor the OBD STATUS for P0752 in the DTCs MENU with the HDS.

    Does the HDS indicate FAILED?

    YES—Repair shift valve A, or replace the transmission, then go to step 14.

    NO—If the HDS indicates PASSED, intermittent failure, the system is OK at this time. If the HDS indicates NOT COMPLETED, go to step 10.

12. Turn the ignition switch to ON (II).

13. Clear the DTC with the HDS.

14. Test-drive the vehicle with the shift lever in D, and let the transmission shift through all five gears.

(cont'd)

DTC Troubleshooting (cont'd)

15. Check for Temporary DTCs or DTCs with the HDS.

    Is DTC P0752 indicated?

    YES—Go to step 8.

    NO—Go to step 16.

16. Monitor the OBD STATUS for P0752 in the DTCs MENU with the HDS.

    Does the HDS indicate PASSED?

    YES—Troubleshooting is complete. If any other Temporary DTCs or DTCs were indicated in step 15, go to the indicated DTC's troubleshooting. ■

    NO—If the HDS indicates FAILED, go to step 8. If the HDS indicates NOT COMPLETED, go to step 14.

DTC P0756: Shift Solenoid Valve B Stuck OFF

DTC P0757: Shift Solenoid Valve B Stuck ON

NOTE: Before you troubleshoot, record all freeze data and any on-board snapshot with the HDS, and review General Troubleshooting Information (see page 14-4).

1. Warm up the engine to normal operating temperature (the radiator fan comes on).

2. Make sure that the transmission is filled to the proper level, and check for fluid leaks.

3. Drain the ATF (see step 3 on page 14-231) through a strainer. Inspect the strainer for metal debris or excessive clutch material.

   Does the strainer have metal debris or excessive clutch material?

   YES—Replace the transmission, then go to step 14.

   NO—Replace the ATF (see page 14-231), then go to step 4.

4. Turn the ignition switch to ON (II).

5. Clear the DTC with the HDS.

6. Test-drive the vehicle with the shift lever in D, and let the transmission shift through all five gears.

7. Monitor the OBD STATUS for P0756 or P0757 in the DTCs MENU with the HDS.

   Does the HDS indicate FAILED?

   YES—Go to step 8.

   NO—If the HDS indicates PASSED, intermittent failure, the system is OK at this time. If the HDS indicates NOT COMPLETED, go to step 6.

8. Clear the DTC with the HDS.

9. Select Shift Solenoid Valve B in the Miscellaneous Test Menu, and check that shift solenoid valve B operates with the HDS.

   Is a clicking sound heard?

   YES—Go to step 10.

   NO—Replace shift solenoid valve B (see page 14-216), then go to step 12.

10. Test-drive the vehicle with the shift lever in D, and let the transmission shift through all five gears.

11. Monitor the OBD STATUS for P0756 or P0757 in the DTCs MENU with the HDS.

    Does the HDS indicate FAILED?

    YES—Repair shift valve B, or replace the transmission, then go to step 14.

    NO—If the HDS indicates PASSED, intermittent failure, the system is OK at this time. If the HDS indicates NOT COMPLETED, go to step 10.

12. Turn the ignition switch to ON (II).

13. Clear the DTC with the HDS.

14. Test-drive the vehicle with the shift lever in D, and let the transmission shift through all five gears.

15. Check for Temporary DTCs or DTCs with the HDS.

    Is DTC P0756 or P0757 indicated?

    YES—Go to step 8.

    NO—Go to step 16.

16. Monitor the OBD STATUS for P0756 or P0757 in the DTCs MENU with the HDS.

    Does the HDS indicate PASSED?

    YES—Troubleshooting is complete. If any other Temporary DTCs or DTCs were indicated in step 15, go to the indicated DTC's troubleshooting. ■

    NO—If the HDS indicates FAILED, go to step 8. If the HDS indicates NOT COMPLETED, go to step 14.

DTC Troubleshooting (cont'd)

DTC P0761: Shift Solenoid Valve C Stuck OFF

NOTE: Before you troubleshoot, record all freeze data and any on-board snapshot with the HDS, and review General Troubleshooting Information (see page 14-4).

1. Warm up the engine to normal operating temperature (the radiator fan comes on).

2. Make sure that the transmission is filled to the proper level, and check for fluid leaks.

3. Drain the ATF (see step 3 on page 14-231) through a strainer. Inspect the strainer for metal debris or excessive clutch material.

   Does the strainer have metal debris or excessive clutch material?

   YES—Replace the transmission, then go to step 14.

   NO—Replace the ATF (see page 14-231), then go to step 4.

4. Turn the ignition switch to ON (II).

5. Clear the DTC with the HDS.

6. Test-drive the vehicle with the shift lever in D, and let the transmission shift through all five gears.

7. Monitor the OBD STATUS for P0761 in the DTCs MENU with the HDS.

   Does the HDS indicate FAILED?

   YES—Go to step 8.

   NO—If the HDS indicates PASSED, intermittent failure, the system is OK at this time. If the HDS indicates NOT COMPLETED, go to step 6.

8. Clear the DTC with the HDS.

9. Select Shift Solenoid Valve C in the Miscellaneous Test Menu, and check that shift solenoid valve C operates with the HDS.

   Is a clicking sound heard?

   YES—Go to step 10.

   NO—Replace shift solenoid valve C (see page 14-216), then go to step 12.

10. Test-drive the vehicle with the shift lever in D, and let the transmission shift through all five gears.

11. Monitor the OBD STATUS for P0761 in the DTCs MENU with the HDS.

    Does the HDS indicate FAILED?

    YES—Repair shift valve C, or replace the transmission, then go to step 14.

    NO—If the HDS indicates PASSED, intermittent failure, the system is OK at this time. If the HDS indicates NOT COMPLETED, go to step 10.

12. Turn the ignition switch to ON (II).

13. Clear the DTC with the HDS.

14. Test-drive the vehicle with the shift lever in D, and let the transmission shift through all five gears.

15. Check for Temporary DTCs or DTCs with the HDS.

    Is DTC P0761 indicated?

    YES—Go to step 8.

    NO—Go to step 16.

16. Monitor the OBD STATUS for P0761 in the DTCs MENU with the HDS.

    Does the HDS indicate PASSED?

    YES—Troubleshooting is complete. If any other Temporary DTCs or DTCs were indicated in step 15, go to the indicated DTC's troubleshooting. ■

    NO—If the HDS indicates FAILED, go to step 8. If the HDS indicates NOT COMPLETED, go to step 14.

DTC P0771: Shift Solenoid Valve E Stuck OFF

NOTE: Before you troubleshoot, record all freeze data and any on-board snapshot with the HDS, and review General Troubleshooting Information (see page 14-4).

1. Warm up the engine to normal operating temperature (the radiator fan comes on).

2. Make sure that the transmission is filled to the proper level, and check for fluid leaks.

3. Drain the ATF (see step 3 on page 14-231) through a strainer. Inspect the strainer for metal debris or excessive clutch material.

   Does the strainer have metal debris or excessive clutch material?

   YES—Replace the transmission, then go to step 14.

   NO—Replace the ATF (see page 14-231), then go to step 4.

4. Turn the ignition switch to ON (II).

5. Clear the DTC with the HDS.

6. Test-drive the vehicle with the shift lever in D, and let the transmission shift through all five gears.

7. Monitor the OBD STATUS for P0771 in the DTCs MENU with the HDS.

   Does the HDS indicate FAILED?

   YES—Go to step 8.

   NO—If the HDS indicates PASSED, intermittent failure, the system is OK at this time. If the HDS indicates NOT COMPLETED, go to step 6.

8. Clear the DTC with the HDS.

(cont'd)

DTC Troubleshooting (cont'd)

9. Select Shift Solenoid Valve E in the Miscellaneous Test Menu, and check that shift solenoid valve E operates with the HDS.

   Is a clicking sound heard?

   YES—Go to step 10.

   NO—Replace shift solenoid valve E (see page 14-216), then go to step 12.

10. Test-drive the vehicle with the shift lever in D, and let the transmission shift through all five gears.

11. Monitor the OBD STATUS for P0771 in the DTCs MENU with the HDS.

    Does the HDS indicate FAILED?

    YES—Repair shift valve E, or replace the transmission, then go to step 14.

    NO—If the HDS indicates PASSED, intermittent failure, the system is OK at this time. If the HDS indicates NOT COMPLETED, go to step 10.

12. Turn the ignition switch to ON (II).

13. Clear the DTC with the HDS.

14. Test-drive the vehicle with the shift lever in D, and let the transmission shift through 1st to 3rd gears, then drive the vehicle at speeds over 19 mph (30 km/h) for at least 20 seconds.

15. Check for Temporary DTCs or DTCs with the HDS.

    Is DTC P0771 indicated?

    YES—Go to step 8.

    NO—Go to step 16.

16. Monitor the OBD STATUS for P0771 in the DTCs MENU with the HDS.

    Does the HDS indicate PASSED?

    YES—Troubleshooting is complete. If any other Temporary DTCs or DTCs were indicated in step 15, go to the indicated DTC's troubleshooting. ■

    NO—If the HDS indicates FAILED, go to step 8. If the HDS indicates NOT COMPLETED, go to step 14.

DTC P0776: A/T Clutch Pressure Control Solenoid Valve B Stuck OFF

DTC P0777: A/T Clutch Pressure Control Solenoid Valve B Stuck ON

NOTE: Before you troubleshoot, record all freeze data and any on-board snapshot with the HDS, and review General Troubleshooting Information (see page 14-4).

1. Warm up the engine to normal operating temperature (the radiator fan comes on).

2. Make sure that the transmission is filled to the proper level, and check for fluid leaks.

3. Drain the ATF (see step 3 on page 14-231) through a strainer. Inspect the strainer for metal debris or excessive clutch material.

   Does the strainer have metal debris or excessive clutch material?

   YES—Replace the transmission, then go to step 13.

   NO—Replace the ATF (see page 14-231), then go to step 4.

4. Turn the ignition switch to ON (II).

5. Clear the DTC with the HDS.

6. Test-drive the vehicle with the shift lever in D, and let the transmission shift through all five gears.

7. Monitor the OBD STATUS for P0776 or P0777 in the DTCs MENU with the HDS.

   Does the HDS indicate FAILED?

   YES—Go to step 8.

   NO—If the HDS indicates PASSED, intermittent failure, the system is OK at this time. If the HDS indicates NOT COMPLETED, go to step 6.

8. Clear the DTC with the HDS.

9. Select Clutch Pressure Control (Linear) Solenoid Valve B in the Miscellaneous Test Menu, and test A/T clutch pressure control solenoid valve B with the HDS.

   Does the HDS indicate NORMAL?

   YES—Intermittent failure, the system is OK at this time. ■

   NO—Follow the instructions indicated on the HDS according to the test result, if the HDS has not determined the cause of the failure, go to step 10. If any part was replaced, go to step 11.

10. Inspect A/T clutch pressure control solenoid valve B (see page 14-221).

    Does A/T clutch pressure control solenoid valve B work properly?

    YES—Repair the hydraulic system related to shift valve B, or replace the transmission, then go to step 13.

    NO—Replace A/T clutch pressure control solenoid valve B (see page 14-225), then go to step 11.

11. Turn the ignition switch to ON (II).

12. Clear the DTC with the HDS.

13. Test-drive the vehicle with the shift lever in D, and let the transmission shift through all five gears.

(cont'd)

DTC Troubleshooting (cont'd)

14. Check for Temporary DTCs or DTCs with the HDS.

    Is DTC P0776 or P0777 indicated?

    YES—Go to step 8.

    NO—Go to step 15.

15. Monitor the OBD STATUS for P0776 or P0777 in the DTCs MENU with the HDS.

    Does the HDS indicate PASSED?

    YES—Troubleshooting is complete. If any other Temporary DTCs or DTCs were indicated in step 14, go to the indicated DTC's troubleshooting.■

    NO—If the HDS indicates FAILED, go to step 8. If the HDS indicates NOT COMPLETED, go to step 13.

DTC P0780: Shift Control System

NOTE:
- Before you troubleshoot, record all freeze data and any on-board snapshot with the HDS, and review General Troubleshooting Information (see page 14-4).
- This code is stored whenever DTCs P1730, P1731, P1732, P1733, and P1734 are detected.

1. Turn the ignition switch to ON (II).

2. Clear the DTC with the HDS.

3. Test-drive the vehicle with the shift lever in D, and let the transmission shift through all five gears.

4. Check for other Temporary DTCs or DTCs indicated along with DTC P0780.

   NOTE: DTC P0780 means there is one or more A/T DTCs regarding the shift control system.

   Are there other DTCs?

   YES—Go to the indicated DTC's troubleshooting.■

   - P1730 (see page 14-195)
   - P1731 (see page 14-197)
   - P1732 (see page 14-198)
   - P1733 (see page 14-200)
   - P1734 (see page 14-201)

   NO—Go to step 5.

5. Update the PCM if it does not have the latest software (see page 11-215), or substitute a known-good PCM (see page 14-8).

6. Test-drive the vehicle with the shift lever in D, and let the transmission shift through all five gears.

7. Check for Temporary DTCs or DTCs with the HDS.

   Is DTC P0780 indicated?

   YES—If the PCM was updated, substitute a known-good PCM (see page 14-8), then go to step 6. If the PCM was substituted, go to step 1.

   NO—Go to step 8.

8. Monitor the OBD STATUS for P0780 in the DTCs MENU with the HDS.

   Does the HDS indicate PASSED?

   YES—If the PCM was updated, troubleshooting is complete. If the PCM was substituted, replace the original PCM (see page 11-216). If any other Temporary DTCs or DTCs were indicated in step 7, go to the indicated DTC's troubleshooting. ■

   NO—If the PCM was updated and the HDS indicates FAILED, substitute a known-good PCM (see page 14-8), then go to step 6. If the PCM was substituted, go to step 1. If the HDS indicates NOT COMPLETED, go to step 6.

DTC P0796: A/T Clutch Pressure Control Solenoid Valve C Stuck OFF

DTC P0797: A/T Clutch Pressure Control Solenoid Valve C Stuck ON

NOTE: Before you troubleshoot, record all freeze data and any on-board snapshot with the HDS, and review General Troubleshooting Information (see page 14-4).

1. Warm up the engine to normal operating temperature (the radiator fan comes on).

2. Make sure that the transmission is filled to the proper level, and check for fluid leaks.

3. Drain the ATF (see step 3 on page 14-231) through a strainer. Inspect the strainer for metal debris or excessive clutch material.

   Does the strainer have metal debris or excessive clutch material?

   YES—Replace the transmission, then go to step 13.

   NO—Replace the ATF (see page 14-231), then go to step 4.

4. Turn the ignition switch to ON (II).

5. Clear the DTC with the HDS.

6. Test-drive the vehicle with the shift lever in D, and let the transmission shift through all five gears.

7. Monitor the OBD STATUS for P0796 or P0797 in the DTCs MENU with the HDS.

   Does the HDS indicate FAILED?

   YES—Go to step 8.

   NO—If the HDS indicates PASSED, intermittent failure, the system is OK at this time. If the HDS indicates NOT COMPLETED, go to step 6.

8. Clear the DTC with the HDS.

(cont'd)

DTC Troubleshooting (cont'd)

9. Select Clutch Pressure Control (Linear) Solenoid Valve C in the Miscellaneous Test Menu, and test A/T clutch pressure control solenoid valve C with the HDS.

   Does the HDS indicate NORMAL?

   YES—Intermittent failure, the system is OK at this time. ■

   NO—Follow the instructions indicated on the HDS according to the test result, if the HDS has not determined the cause of the failure, go to step 10. If any part was replaced, go to step 11.

10. Inspect A/T clutch pressure control solenoid valve C (see page 14-223).

    Does A/T clutch pressure control solenoid valve C work properly?

    YES—Repair the hydraulic system related to shift valves B and C, or replace the transmission, then go to step 13.

    NO—Replace A/T clutch pressure control solenoid valve C (see page 14-225), then go to step 11.

11. Turn the ignition switch to ON (II).

12. Clear the DTC with the HDS.

13. Test-drive the vehicle with the shift lever in D, and let the transmission shift through all five gears.

14. Check for Temporary DTCs or DTCs with the HDS.

    Is DTC P0796 or P0797 indicated?

    YES—Go to step 8.

    NO—Go to step 15.

15. Monitor the OBD STATUS for P0796 or P0797 in the DTCs MENU with the HDS.

    Does the HDS indicate PASSED?

    YES—Troubleshooting is complete. If any other Temporary DTCs or DTCs were indicated in step 14, go to the indicated DTC's troubleshooting. ■

    NO—If the HDS indicates FAILED, go to step 8. If the HDS indicates NOT COMPLETED, go to step 13.

DTC P0842: Short in 2nd Clutch Transmission Fluid Pressure Switch Circuit, or 2nd Clutch Transmission Fluid Pressure Switch Stuck ON

NOTE:
- Before you troubleshoot, record all freeze data and any on-board snapshot with the HDS, and review General Troubleshooting Information (see page 14-4).
- This code is caused by an electrical circuit problem and cannot be caused by a mechanical problem in the transmission.

1. Turn the ignition switch to ON (II).

2. Clear the DTC with the HDS.

3. Check the 2nd Pressure Switch in the Data List with the HDS when not in 2nd gear.

   Is the 2nd Pressure Switch OFF?

   YES—Go to step 4.

   NO—Go to step 7.

4. Start the engine, and warm it up to normal operating temperature (the radiator fan comes on).

5. Test-drive the vehicle in 4th gear with the shift lever in D for at least 2 seconds.

6. Monitor the OBD STATUS for P0842 in the DTCs MENU with the HDS.

   Does the HDS indicate FAILED?

   YES—Go to step 7.

   NO—If the HDS indicates PASSED, intermittent failure, the system is OK at this time. Check for intermittent short to body ground in the wire between the 2nd clutch transmission fluid pressure switch and the PCM. If the HDS indicates NOT COMPLETED, go to step 4.

7. Turn the ignition switch to LOCK (0).

8. Disconnect the 2nd clutch transmission fluid pressure switch connector.

9. Turn the ignition switch to ON (II).

10. Check the 2nd Pressure Switch in the Data List with the HDS.

    Is the 2nd Pressure Switch OFF?

    YES—Replace the 2nd clutch transmission fluid pressure switch (see page 14-227), then go to step 15.

    NO—Go to step 11.

11. Turn the ignition switch to LOCK (0).

12. Jump the SCS line with the HDS.

13. Disconnect PCM connector B (49P).

14. Check for continuity between PCM connector terminal B8 and body ground.

PCM CONNECTOR B (49P)

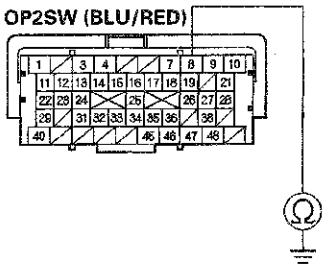

Terminal side of female terminals

Is there continuity?

YES—Repair short to body ground in the wire between PCM connector terminal B8 and the 2nd clutch transmission fluid pressure switch, then go to step 15.

NO—Go to step 22.

(cont'd)

DTC Troubleshooting (cont'd)

15. Reconnect all connectors.

16. Turn the ignition switch to ON (II).

17. Clear the DTC with the HDS.

18. Start the engine, and warm it up to normal operating temperature (the radiator fan comes on).

19. Test-drive the vehicle in 2nd gear with the shift lever in D for at least 2 seconds, then drive in 4th gear for at least 2 seconds.

20. Check for Temporary DTCs or DTCs with the HDS.

    Is DTC P0842 indicated?

    YES—Check for intermittent short to body ground in the wire between the 2nd clutch transmission fluid pressure switch and the PCM, then go to step 1.

    NO—Go to step 21.

21. Monitor the OBD STATUS for P0842 in the DTCs MENU with the HDS.

    Does the HDS indicate PASSED?

    YES—Troubleshooting is complete. If any other Temporary DTCs or DTCs were indicated in step 20, go to the indicated DTC's troubleshooting.■

    NO—If the HDS indicates FAILED, check for intermittent short to body ground in the wire between the 2nd clutch transmission fluid pressure switch and the PCM, then go to step 1. If the HDS indicates NOT COMPLETED, go to step 18.

22. Reconnect all connectors.

23. Update the PCM if it does not have the latest software (see page 11-215), or substitute a known-good PCM (see page 14-8).

24. Start the engine, and warm it up to normal operating temperature (the radiator fan comes on).

25. Test-drive the vehicle in 2nd gear with the shift lever in D for at least 2 seconds, then drive in 4th gear for at least 2 seconds.

26. Check for Temporary DTCs or DTCs with the HDS.

    Is DTC P0842 indicated?

    YES—Check for intermittent short to body ground in the wire between the 2nd clutch transmission fluid pressure switch and the PCM. If the PCM was updated, substitute a known-good PCM (see page 14-8), then go to step 24. If the PCM was substituted, go to step 1.

    NO—Go to step 27.

27. Monitor the OBD STATUS for P0842 in the DTCs MENU with the HDS.

    Does the HDS indicate PASSED?

    YES—If the PCM was updated, troubleshooting is complete. If the PCM was substituted, replace the original PCM (see page 11-216). If any other Temporary DTCs or DTCs were indicated in step 26, go to the indicated DTC's troubleshooting.■

    NO—If the HDS indicates FAILED, check for intermittent short to body ground in the wire between the 2nd clutch transmission fluid pressure switch and the PCM. If the PCM was updated, substitute a known-good PCM (see page 14-8), then go to step 24. If the PCM was substituted, go to step 1. If the HDS indicates NOT COMPLETED, go to step 24.

DTC P0843: Open in 2nd Clutch Transmission Fluid Pressure Switch Circuit, or 2nd Clutch Transmission Fluid Pressure Switch Stuck OFF

NOTE:
- Before you troubleshoot, record all freeze data and any on-board snapshot with the HDS, and review General Troubleshooting Information (see page 14-4).
- This code is caused by an electrical circuit problem and cannot be caused by a mechanical problem in the transmission.

1. Turn the ignition switch to ON (II).
2. Clear the DTC with the HDS.
3. Start the engine, and warm it up to normal operating temperature (the radiator fan comes on).
4. Shift to 2 while pressing the brake pedal, and check if the Shift Control indicates 2 in the Data List with the HDS.
5. Check the 2nd Pressure Switch in the Data List with the HDS .

   Is the 2nd Pressure Switch ON?

   YES—Go to step 6.

   NO—Go to step 8.
6. Test-drive the vehicle in 2nd gear with the shift lever in D for at least 2 seconds.
7. Monitor the OBD STATUS for P0843 in the DTCs MENU with the HDS.

   Does the HDS indicate FAILED?

   YES—Go to step 8.

   NO—If the HDS indicates PASSED, intermittent failure, the system is OK at this time. Check for poor connections or loose terminals between the 2nd clutch transmission fluid pressure switch and the PCM. If the HDS indicates NOT COMPLETED, go to step 6.
8. Turn the ignition switch to LOCK (0).
9. Disconnect the 2nd clutch transmission fluid pressure switch connector.
10. Turn the ignition switch to ON (II).
11. Measure the voltage between the 2nd clutch transmission fluid pressure switch connector terminal and body ground.

2ND CLUTCH TRANSMISSION FLUID PRESSURE SWITCH CONNECTOR

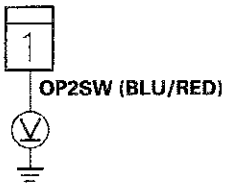

Wire side of female terminals

Is there about 5 V?

YES—Replace the 2nd clutch transmission fluid pressure switch (see page 14-227), then go to step 16.

NO—Go to step 12.

(cont'd)

DTC Troubleshooting (cont'd)

12. Turn the ignition switch to LOCK (0).

13. Jump the SCS line with the HDS.

14. Disconnect PCM connector B (49P).

15. Check for continuity between PCM connector terminal B8 and the 2nd clutch transmission fluid pressure switch connector terminal.

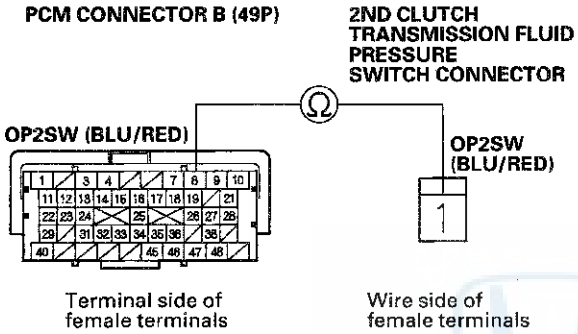

Is there continuity?

YES—Go to step 23.

NO—Repair open in the wire between PCM connector terminal B8 and the 2nd clutch transmission fluid pressure switch, then go to step 16.

16. Reconnect all connectors.

17. Turn the ignition switch to ON (II).

18. Clear the DTC with the HDS.

19. Start the engine, and warm it up to normal operating temperature (the radiator fan comes on).

20. Test-drive the vehicle in 2nd gear with the shift lever in D for at least 2 seconds, then drive in 4th gear for at least 2 seconds.

21. Check for Temporary DTCs or DTCs with the HDS.

Is DTC P0843 indicated?

YES—Check for poor connections or loose terminals between the 2nd clutch transmission fluid pressure switch and the PCM, then go to step 1.

NO—Go to step 22.

22. Monitor the OBD STATUS for P0843 in the DTCs MENU with the HDS.

Does the HDS indicate PASSED?

YES—Troubleshooting is complete. If any other Temporary DTCs or DTCs were indicated in step 21, go to the indicated DTC's troubleshooting.■

NO—If the HDS indicates FAILED, check for poor connections or loose terminals between the 2nd clutch transmission fluid pressure switch and the PCM, then go to step 1. If the HDS indicates NOT COMPLETED, go to step 19.

23. Reconnect all connectors.

24. Update the PCM if it does not have the latest software (see page 11-215), or substitute a known-good PCM (see page 14-8).

25. Start the engine, and warm it up to normal operating temperature (the radiator fan comes on).

26. Test-drive the vehicle in 2nd gear with the shift lever in D for at least 2 seconds, then drive in 4th gear for at least 2 seconds.

27. Check for Temporary DTCs or DTCs with the HDS.

Is DTC P0843 indicated?

YES—Check for poor connections or loose terminals between the 2nd clutch transmission fluid pressure switch and the PCM. If the PCM was updated, substitute a known-good PCM (see page 14-8), then go to step 25. If the PCM was substituted, go to step 1.

NO—Go to step 28.

28. Monitor the OBD STATUS for P0843 in the DTCs MENU with the HDS.

Does the HDS indicate PASSED?

YES—If the PCM was updated, troubleshooting is complete. If the PCM was substituted, replace the original PCM (see page 11-216). If any other Temporary DTCs or DTCs were indicated in step 27, go to the indicated DTC's troubleshooting. ■

NO—If the HDS indicates FAILED, check for poor connections or loose terminals between the 2nd clutch transmission fluid pressure switch and the PCM. If the PCM was updated, substitute a known-good PCM (see page 14-8), then go to step 25. If the PCM was substituted, go to step 1. If the HDS indicates NOT COMPLETED, go to step 25.

DTC P0847: Short in 3rd Clutch Transmission Fluid Pressure Switch Circuit, or 3rd Clutch Transmission Fluid Pressure Switch Stuck ON

NOTE:
- Before you troubleshoot, record all freeze data and any on-board snapshot with the HDS, and review General Troubleshooting Information (see page 14-4).
- This code is caused by an electrical circuit problem and cannot be caused by a mechanical problem in the transmission.

1. Turn the ignition switch to ON (II).

2. Clear the DTC with the HDS.

3. Check the 3rd Pressure Switch in the Data List with the HDS when the transmission is not in 3rd gear.

Is the 3rd Pressure Switch OFF?

YES—Go to step 4.

NO—Go to step 7.

4. Start the engine, and warm it up to normal operating temperature (the radiator fan comes on).

5. Test-drive the vehicle in 4th gear with the shift lever in D for at least 2 seconds.

6. Monitor the OBD STATUS for P0847 in the DTCs MENU with the HDS.

Does the HDS indicate FAILED?

YES—Go to step 7.

NO—If the HDS indicates PASSED, intermittent failure, the system is OK at this time. Check for intermittent short to body ground in the wire between the 3rd clutch transmission fluid pressure switch and the PCM. If the HDS indicates NOT COMPLETED, go to step 4.

(cont'd)

DTC Troubleshooting (cont'd)

7. Turn the ignition switch to LOCK (0).

8. Disconnect the 3rd clutch transmission fluid pressure switch connector.

9. Turn the ignition switch to ON (II).

10. Check the 3rd Pressure Switch in the Data List with the HDS.

    Is the 3rd Pressure Switch OFF?

    YES—Replace the 3rd clutch transmission fluid pressure switch (see page 14-227), then go to step 15.

    NO—Go to step 11.

11. Turn the ignition switch to LOCK (0).

12. Jump the SCS line with the HDS.

13. Disconnect PCM connector B (49P).

14. Check for continuity between PCM connector terminal B9 and body ground.

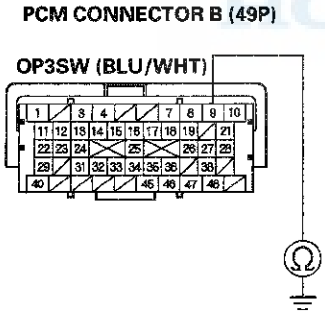

Terminal side of female terminals

Is there continuity?

YES—Repair short to body ground in the wire between PCM connector terminal B9 and the 3rd clutch transmission fluid pressure switch, then go to step 15.

NO—Go to step 22.

15. Reconnect all connectors.

16. Turn the ignition switch to ON (II).

17. Clear the DTC with the HDS.

18. Start the engine, and warm it up to normal operating temperature (the radiator fan comes on).

19. Test-drive the vehicle in 3rd gear with the shift lever in D for at least 2 seconds, then drive in 4th gear for at least 2 seconds.

20. Check for Temporary DTCs or DTCs with the HDS.

    Is DTC P0847 indicated?

    YES—Check for intermittent short to body ground in the wire between the 3rd clutch transmission fluid pressure switch and the PCM, then go to step 1.

    NO—Go to step 21.

21. Monitor the OBD STATUS for P0847 in the DTCs MENU with the HDS.

    Does the HDS indicate PASSED?

    YES—Troubleshooting is complete. If any other Temporary DTCs or DTCs were indicated in step 20, go to the indicated DTC's troubleshooting. ■

    NO—If the HDS indicates FAILED, check for intermittent short to body ground in the wire between the 3rd clutch transmission fluid pressure switch and the PCM, then go to step 1. If the HDS indicates NOT COMPLETED, go to step 18.

22. Reconnect all connectors.

23. Update the PCM if it does not have the latest software (see page 11-215), or substitute a known-good PCM (see page 14-8).

24. Start the engine, and warm it up to normal operating temperature (the radiator fan comes on).

25. Test-drive the vehicle in 3rd gear with the shift lever in D for at least 2 seconds, then drive in 4th gear for at least 2 seconds.

26. Check for Temporary DTCs or DTCs with the HDS.

    Is DTC P0847 indicated?

    YES—Check for intermittent short to body ground in the wire between the 3rd clutch transmission fluid pressure switch and the PCM. If the PCM was updated, substitute a known-good PCM (see page 14-8), then go to step 24. If the PCM was substituted, go to step 1.

    NO—Go to step 27.

27. Monitor the OBD STATUS for P0847 in the DTCs MENU with the HDS.

    Does the HDS indicate PASSED?

    YES—If the PCM was updated, troubleshooting is complete. If the PCM was substituted, replace the original PCM (see page 11-216). If any other Temporary DTCs or DTCs were indicated in step 26, go to the indicated DTC's troubleshooting. ■

    NO—If the HDS indicates FAILED, check for intermittent short to body ground in the wire between the 3rd clutch transmission fluid pressure switch and the PCM. If the PCM was updated, substitute a known-good PCM (see page 14-8), then go to step 24. If the PCM was substituted, go to step 1. If the HDS indicates NOT COMPLETED, go to step 24.

DTC P0848: Open in 3rd Clutch Transmission Fluid Pressure Switch Circuit, or 3rd Clutch Transmission Fluid Pressure Switch Stuck OFF

NOTE:
- Before you troubleshoot, record all freeze data and any on-board snapshot with the HDS, and review General Troubleshooting Information (see page 14-4).
- This code is caused by an electrical circuit problem and cannot be caused by a mechanical problem in the transmission.

1. Turn the ignition switch to ON (II).

2. Clear the DTC with the HDS.

3. Start the engine, and warm it up to normal operating temperature (the radiator fan comes on).

4. Test-drive the vehicle in 3rd gear with the shift lever in D, and check if the Shift Control indicates 3 in the Data List with the HDS.

5. Check the 3rd Pressure Switch in the Data List with the HDS.

   Is the 3rd Pressure Switch ON?

   YES—Go to step 6.

   NO—Go to step 8.

6. Test-drive the vehicle in 3rd gear with the shift lever in D for at least 2 seconds.

7. Monitor the OBD STATUS for P0848 in the DTCs MENU with the HDS.

   Does the HDS indicate FAILED?

   YES—Go to step 8.

   NO—If the HDS indicates PASSED, intermittent failure, the system is OK at this time. Check for poor connections or loose terminals between the 3rd clutch transmission fluid pressure switch and the PCM. If the HDS indicates NOT COMPLETED, go to step 6.

(cont'd)

DTC Troubleshooting (cont'd)

8. Turn the ignition switch to LOCK (0).

9. Disconnect the 3rd clutch transmission fluid pressure switch connector.

10. Turn the ignition switch to ON (II).

11. Measure the voltage between the 3rd clutch transmission fluid pressure switch connector terminal and body ground.

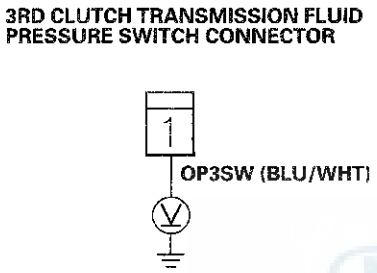

Is there about 5 V?

YES—Replace the 3rd clutch transmission fluid pressure switch (see page 14-227), then go to step 16.

NO—Go to step 12.

12. Turn the ignition switch to LOCK (0).

13. Jump the SCS line with the HDS.

14. Disconnect PCM connector B (49P).

15. Check for continuity between PCM connector terminal B9 and the 3rd clutch transmission fluid pressure switch connector terminal.

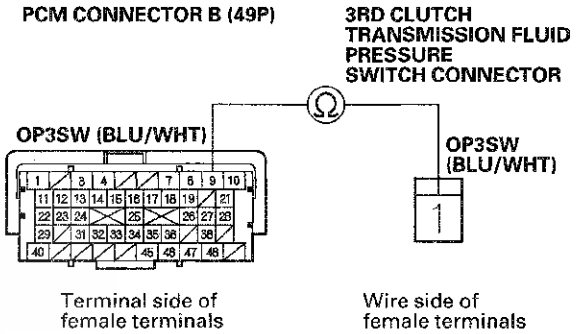

Is there continuity?

YES—Go to step 23.

NO—Repair open in the wire between PCM connector terminal B9 and the 3rd clutch transmission fluid pressure switch, then go to step 16.

16. Reconnect all connectors.

17. Turn the ignition switch to ON (II).

18. Clear the DTC with the HDS.

19. Start the engine, and warm it up to normal operating temperature (the radiator fan comes on).

20. Test-drive the vehicle in 3rd gear with the shift lever in D for at least 2 seconds, then drive in 4th gear for at least 2 seconds.

21. Check for Temporary DTCs or DTCs with the HDS.

    Is DTC P0848 indicated?

    YES—Check for poor connections or loose terminals between the 3rd clutch transmission fluid pressure switch and the PCM, then go to step 1.

    NO—Go to step 22.

22. Monitor the OBD STATUS for P0848 in the DTCs MENU with the HDS.

    Does the HDS indicate PASSED?

    YES—Troubleshooting is complete. If any other Temporary DTCs or DTCs were indicated in step 21, go to the indicated DTC's troubleshooting. ■

    NO—If the HDS indicates FAILED, check for poor connections or loose terminals between the 3rd clutch transmission fluid pressure switch and the PCM, then go to step 1. If the HDS indicates NOT COMPLETED, go to step 19.

23. Reconnect all connectors.

24. Update the PCM if it does not have the latest software (see page 11-215), or substitute a known-good PCM (see page 14-8).

25. Start the engine, and warm it up to normal operating temperature (the radiator fan comes on).

26. Test-drive the vehicle in 3rd gear with the shift lever in D for at least 2 seconds, then drive in 4th gear for at least 2 seconds.

27. Check for Temporary DTCs or DTCs with the HDS.

    Is DTC P0848 indicated?

    YES—Check for poor connections or loose terminals between the 3rd clutch transmission fluid pressure switch and the PCM. If the PCM was updated, substitute a known-good PCM (see page 14-8), then go to step 25. If the PCM was substituted, go to step 1.

    NO—Go to step 28.

28. Monitor the OBD STATUS for P0848 in the DTCs MENU with the HDS.

    Does the HDS indicate PASSED?

    YES—If the PCM was updated, troubleshooting is complete. If the PCM was substituted, replace the original PCM (see page 11-216). If any other Temporary DTCs or DTCs were indicated in step 27, go to the indicated DTC's troubleshooting. ■

    NO—If the HDS indicates FAILED, check for poor connections or loose terminals between the 3rd clutch transmission fluid pressure switch and the PCM. If the PCM was updated, substitute a known-good PCM (see page 14-8), then go to step 25. If the PCM was substituted, go to step 1. If the HDS indicates NOT COMPLETED, go to step 25.

DTC Troubleshooting (cont'd)

DTC P0962: Problem in A/T Clutch Pressure Control Solenoid Valve A Circuit

NOTE:
- Before you troubleshoot, record all freeze data and any on-board snapshot with the HDS, and review General Troubleshooting Information (see page 14-4).
- This code is caused by an electrical circuit problem and cannot be caused by a mechanical problem in the transmission.

1. Turn the ignition switch to ON (II).
2. Clear the DTC with the HDS.
3. Start the engine, and wait for at least 1 second.
4. Check for Temporary DTCs or DTCs with the HDS.

   Is DTC P0962 indicated?

   YES—Go to step 8.

   NO—Go to step 5.

5. Select Clutch Pressure Control (Linear) Solenoid Valve A in the Miscellaneous Test Menu, and test A/T clutch pressure control solenoid valve A with the HDS.

   Does the HDS indicate NORMAL?

   YES—Go to step 6.

   NO—Go to step 8.

6. In the Clutch Pressure Control Solenoid Valve Control menu, select A/T clutch pressure control solenoid valve A at 1.0 A.
7. Monitor the OBD STATUS for P0962 in the DTCs MENU with the HDS.

   Does the HDS indicate FAILED?

   YES—Go to step 8.

   NO—If the HDS indicates PASSED, intermittent failure, the system is OK at this time. Check for poor connections or loose terminals between A/T clutch pressure control solenoid valve A and the PCM. If the HDS indicates NOT COMPLETED, go to step 5.

8. Turn the ignition switch to LOCK (0).
9. Jump the SCS line with the HDS.
10. Disconnect PCM connectors A (49P) and C (49P).
11. Turn the ignition switch to ON (II).
12. Measure the voltage between PCM connector terminals A1 and C44.

PCM CONNECTORS

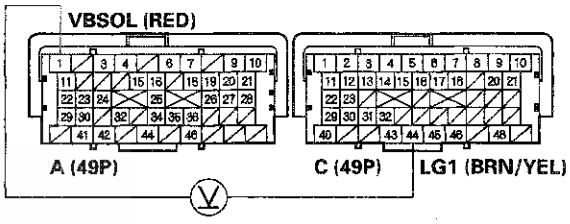

Terminal side of female terminals

Is there battery voltage?

YES—Go to step 13.

NO—Check for a blown No. 10 fuse (10 A) in the driver's under-dash fuse/relay box. If the fuse is OK, repair open in the wire between PCM connector terminal A1 and the driver's under-dash fuse/relay box, then go to step 21.

13. Turn the ignition switch to LOCK (0).

14. Disconnect the A/T clutch pressure control solenoid valve A connector.

15. Measure the resistance between A/T clutch pressure control solenoid valve A connector terminals No. 1 and No. 2.

A/T CLUTCH PRESSURE CONTROL SOLENOID VALVE A CONNECTOR

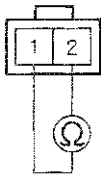

Terminal side of male terminals

Is there 3– 10 Ω ?

YES—Go to step 16.

NO—Replace A/T clutch pressure control solenoid valve A (see page 14-220), then go to step 21.

16. Check for continuity between A/T clutch pressure control solenoid valve A connector terminal No. 2 and body ground.

A/T CLUTCH PRESSURE CONTROL SOLENOID VALVE A CONNECTOR

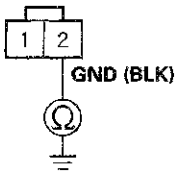

Wire side of female terminals

Is there continuity?

YES—Go to step 17.

NO—Repair open in the wire between A/T clutch pressure control solenoid valve A and body ground (G101) (see page 22-22), or repair poor ground (G101), then go to step 21.

(cont'd)

DTC Troubleshooting (cont'd)

17. Jump the SCS line with the HDS.

18. Disconnect PCM connector B (49P).

19. Check for continuity between A/T clutch pressure control solenoid valve A connector terminal No. 1 and body ground.

A/T CLUTCH PRESSURE CONTROL SOLENOID VALVE A CONNECTOR

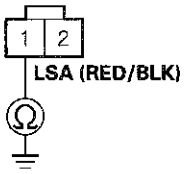

Wire side of female terminals

Is there continuity?

YES—Repair short to body ground in the wire between A/T clutch pressure control solenoid valve A connector terminal No. 1 and body ground, then go to step 21.

NO—Go to step 20.

20. Check for continuity between A/T clutch pressure control solenoid valve A connector terminal No. 1 and PCM connector terminal B48.

PCM CONNECTOR B (49P)

A/T CLUTCH PRESSURE CONTROL SOLENOID VALVE A CONNECTOR

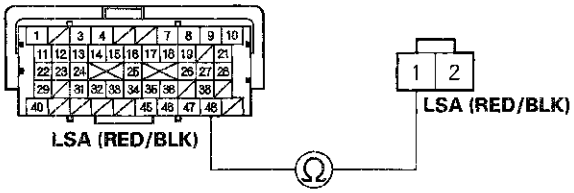

Terminal side of female terminals

Wire side of female terminals

Is there continuity?

YES—Go to step 27.

NO—Repair open in the wire between A/T clutch pressure control solenoid valve A connector terminal No. 1 and PCM connector terminal B48, then go to step 21.

21. Reconnect all connectors.

22. Turn the ignition switch to ON (II).

23. Clear the DTC with the HDS.

24. Start the engine, and wait for at least 1 second.

25. Check for Temporary DTCs or DTCs with the HDS.

    Is DTC P0962 indicated?

    YES—Check for poor connections or loose terminals between A/T clutch pressure control solenoid valve A and the PCM, then go to step 1.

    NO—Go to step 26.

26. Monitor the OBD STATUS for P0962 in the DTCs MENU with the HDS.

    Does the HDS indicate PASSED?

    YES—Troubleshooting is complete. If any other Temporary DTCs or DTCs were indicated in step 25, go to the indicated DTC's troubleshooting. ■

    NO—If the HDS indicates FAILED, check for poor connections or loose terminals between A/T clutch pressure control solenoid valve A and the PCM, then go to step 1. If the HDS indicates NOT COMPLETED, go to step 24.

27. Reconnect all connectors.

28. Update the PCM if it does not have the latest software (see page 11-215), or substitute a known-good PCM (see page 14-8).

29. Start the engine, and wait for at least 1 second.

30. Check for Temporary DTCs or DTCs with the HDS.

    Is DTC P0962 indicated?

    YES—Check for poor connections or loose terminals between A/T clutch pressure control solenoid valve A and the PCM. If the PCM was updated, substitute a known-good PCM (see page 14-8), then go to step 29. If the PCM was substituted, go to step 1.

    NO—Go to step 31.

31. Monitor the OBD STATUS for P0962 in the DTCs MENU with the HDS.

    Does the HDS indicate PASSED?

    YES—If the PCM was updated, troubleshooting is complete. If the PCM was substituted, replace the original PCM (see page 11-216). If any other Temporary DTCs or DTCs were indicated in step 30, go to the indicated DTC's troubleshooting. ■

    NO—If the HDS indicates FAILED, check for poor connections or loose terminals between A/T clutch pressure control solenoid valve A and the PCM. If the PCM was updated, substitute a known-good PCM (see page 14-8), then go to step 29. If the PCM was substituted, go to step 1. If the HDS indicates NOT COMPLETED, go to step 29.

DTC Troubleshooting (cont'd)

DTC P0963: Problem in A/T Clutch Pressure Control Solenoid Valve A

NOTE:
- Before you troubleshoot, record all freeze data and any on-board snapshot with the HDS, and review General Troubleshooting Information (see page 14-4).
- This code is caused by an electrical circuit problem and cannot be caused by a mechanical problem in the transmission.

1. Turn the ignition switch to ON (II).
2. Clear the DTC with the HDS.
3. Start the engine, and wait for at least 1 second.
4. Check for Temporary DTCs or DTCs with the HDS.

   Is DTC P0963 indicated?

   YES—Go to step 8.

   NO—Go to step 5.
5. Select Clutch Pressure Control (Linear) Solenoid Valve A in the Miscellaneous Test Menu, and test A/T clutch pressure control solenoid valve A with the HDS.

   Does the HDS indicate NORMAL?

   YES—Go to step 6.

   NO—Go to step 8.
6. In the Clutch Pressure Control Solenoid Valve Control menu, select A/T clutch pressure control solenoid valve A at 0.2 A.
7. Monitor the OBD STATUS for P0963 in the DTCs MENU with the HDS.

   Does the HDS indicate FAILED?

   YES—Go to step 8.

   NO—If the HDS indicates PASSED, intermittent failure, the system is OK at this time. Check for poor connections or loose terminals between A/T clutch pressure control solenoid valve A and the PCM. If the HDS indicates NOT COMPLETED, go to step 5.
8. Turn the ignition switch to LOCK (0).
9. Disconnect the A/T clutch pressure control solenoid valve A connector.
10. Measure the resistance between A/T clutch pressure control solenoid valve A connector terminals No. 1 and No. 2.

A/T CLUTCH PRESSURE CONTROL SOLENOID VALVE A CONNECTOR

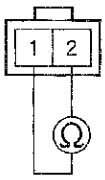

Terminal side of male terminals

Is there 3– 10 Ω ?

YES—Go to step 11.

NO—Replace A/T clutch pressure control solenoid valve A (see page 14-220), then go to step 12.

11. Check for continuity between A/T clutch pressure control solenoid valve A connector terminal No. 2 and body ground.

A/T CLUTCH PRESSURE CONTROL SOLENOID VALVE A CONNECTOR

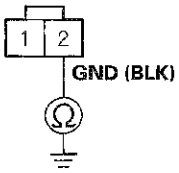

Wire side of female terminals

Is there continuity?

YES—Go to step 18.

NO—Repair open in the wire between A/T clutch pressure control solenoid valve A and body ground (G101) (see page 22-22), or repair poor ground (G101), then go to step 12.

12. Reconnect all connectors.

13. Turn the ignition switch to ON (II).

14. Clear the DTC with the HDS.

15. Start the engine, and wait for at least 1 second.

16. Check for Temporary DTCs or DTCs with the HDS.

    Is DTC P0963 indicated?

    YES—Check for poor connections or loose terminals between A/T clutch pressure control solenoid valve A and the PCM, then go to step 1.

    NO—Go to step 17.

17. Monitor the OBD STATUS for P0963 in the DTCs MENU with the HDS.

    Does the HDS indicate PASSED?

    YES—Troubleshooting is complete. If any other Temporary DTCs or DTCs were indicated in step 16, go to the indicated DTC's troubleshooting. ■

    NO—If the HDS indicates FAILED, check for poor connections or loose terminals between A/T clutch pressure control solenoid valve A and the PCM, then go to step 1. If the HDS indicates NOT COMPLETED, go to step 15.

18. Reconnect all connectors.

19. Update the PCM if it does not have the latest software (see page 11-215), or substitute a known-good PCM (see page 14-8).

20. Start the engine, and wait for at least 1 second.

21. Check for Temporary DTCs or DTCs with the HDS.

    Is DTC P0963 indicated?

    YES—Check for poor connections or loose terminals between A/T clutch pressure control solenoid valve A and the PCM. If the PCM was updated, substitute a known-good PCM (see page 14-8), then go to step 20. If the PCM was substituted, go to step 1.

    NO—Go to step 22.

22. Monitor the OBD STATUS for P0963 in the DTCs MENU with the HDS.

    Does the HDS indicate PASSED?

    YES—If the PCM was updated, troubleshooting is complete. If the PCM was substituted, replace the original PCM (see page 11-216). If any other Temporary DTCs or DTCs were indicated in step 21, go to the indicated DTC's troubleshooting. ■

    NO—If the HDS indicates FAILED, check for poor connections or loose terminals between A/T clutch pressure control solenoid valve A and the PCM. If the PCM was updated, substitute a known-good PCM (see page 14-8), then go to step 20. If the PCM was substituted, go to step 1. If the HDS indicates NOT COMPLETED, go to step 20.

DTC Troubleshooting (cont'd)

DTC P0966: Problem in A/T Clutch Pressure Control Solenoid Valve B Circuit

NOTE:
- Before you troubleshoot, record all freeze data and any on-board snapshot with the HDS, and review General Troubleshooting Information (see page 14-4).
- This code is caused by an electrical circuit problem and cannot be caused by a mechanical problem in the transmission.

1. Turn the ignition switch to ON (II).
2. Clear the DTC with the HDS.
3. Start the engine, and wait for at least 1 second.
4. Check for Temporary DTCs or DTCs with the HDS.

   Is DTC P0966 indicated?

   YES—Go to step 8.

   NO—Go to step 5.

5. Select Clutch Pressure Control (Linear) Solenoid Valve B in the Miscellaneous Test Menu, and test A/T clutch pressure control solenoid valve B with the HDS.

   Does the HDS indicate NORMAL?

   YES—Go to step 6.

   NO—Go to step 8.

6. In the Clutch Pressure Control Solenoid Valve Control menu, select A/T clutch pressure control solenoid valve B at 1.0 A.
7. Monitor the OBD STATUS for P0966 in the DTCs MENU with the HDS.

   Does the HDS indicate FAILED?

   YES—Go to step 8.

   NO—If the HDS indicates PASSED, intermittent failure, the system is OK at this time. Check for poor connections or loose terminals between A/T clutch pressure control solenoid valve B and the PCM. If the HDS indicates NOT COMPLETED, go to step 5.

8. Turn the ignition switch to LOCK (0).
9. Disconnect the A/T clutch pressure control solenoid valve B connector.
10. Measure the resistance between A/T clutch pressure control solenoid valve B connector terminals No. 1 and No. 2.

A/T CLUTCH PRESSURE CONTROL SOLENOID VALVE B CONNECTOR

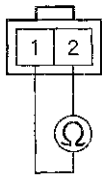

Terminal side of male terminals

Is there 3—10 Ω ?

YES—Go to step 11.

NO—Replace A/T clutch pressure control solenoid valve B (see page 14-225), then go to step 16.

11. Check for continuity between A/T clutch pressure control solenoid valve B connector terminal No. 2 and body ground.

A/T CLUTCH PRESSURE CONTROL SOLENOID VALVE B CONNECTOR

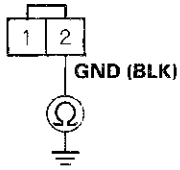

Wire side of female terminals

Is there continuity?

YES—Go to step 12.

NO—Repair open in the wire between A/T clutch pressure control solenoid valve B and body ground (G101) (see page 22-22), or repair poor ground (G101), then go to step 16.

12. Jump the SCS line with the HDS.

13. Disconnect PCM connector B (49P).

14. Check for continuity between A/T clutch pressure control solenoid valve B connector terminal No. 1 and body ground.

A/T CLUTCH PRESSURE CONTROL SOLENOID VALVE B CONNECTOR

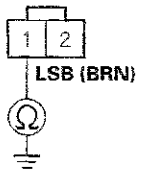

Wire side of female terminals

Is there continuity?

YES—Repair short to body ground in the wire between A/T clutch pressure control solenoid valve B connector terminal No. 1 and body ground, then go to step 16.

NO—Go to step 15.

15. Check for continuity between A/T clutch pressure control solenoid valve B connector terminal No. 1 and PCM connector terminal B40.

PCM CONNECTOR B (49P)

A/T CLUTCH PRESSURE CONTROL SOLENOID VALVE B CONNECTOR

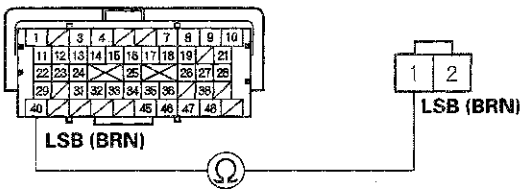

Terminal side of female terminals

Wire side of female terminals

Is there continuity?

YES—Go to step 22.

NO—Repair open in the wire between A/T clutch pressure control solenoid valve B connector terminal No. 1 and PCM connector terminal B40, then go to step 16.

HONDA

(cont'd)

DTC Troubleshooting (cont'd)

16. Reconnect all connectors.

17. Turn the ignition switch to ON (II).

18. Clear the DTC with the HDS.

19. Start the engine, and wait for at least 1 second.

20. Check for Temporary DTCs or DTCs with the HDS.

    Is DTC P0966 indicated?

    YES—Check for poor connections or loose terminals between A/T clutch pressure control solenoid valve B and the PCM, then go to step 1.

    NO—Go to step 21.

21. Monitor the OBD STATUS for P0966 in the DTCs MENU with the HDS.

    Does the HDS indicate PASSED?

    YES—Troubleshooting is complete. If any other Temporary DTCs or DTCs were indicated in step 20, go to the indicated DTC's troubleshooting. ■

    NO—If the HDS indicates FAILED, check for poor connections or loose terminals between A/T clutch pressure control solenoid valve B and the PCM, then go to step 1. If the HDS indicates NOT COMPLETED, go to step 19.

22. Reconnect all connectors.

23. Update the PCM if it does not have the latest software (see page 11-215), or substitute a known-good PCM (see page 14-8).

24. Start the engine, and wait for at least 1 second.

25. Check for Temporary DTCs or DTCs with the HDS.

    Is DTC P0966 indicated?

    YES—Check for poor connections or loose terminals between A/T clutch pressure control solenoid valve B and the PCM. If the PCM was updated, substitute a known-good PCM (see page 14-8), then go to step 24. If the PCM was substituted, go to step 1.

    NO—Go to step 26.

26. Monitor the OBD STATUS for P0966 in the DTCs MENU with the HDS.

    Does the HDS indicate PASSED?

    YES—If the PCM was updated, troubleshooting is complete. If the PCM was substituted, replace the original PCM (see page 11-216). If any other Temporary DTCs or DTCs were indicated in step 25, go to the indicated DTC's troubleshooting. ■

    NO—If the HDS indicates FAILED, check for poor connections or loose terminals between A/T clutch pressure control solenoid valve B and the PCM. If the PCM was updated, substitute a known-good PCM (see page 14-8), then go to step 24. If the PCM was substituted, go to step 1. If the HDS indicates NOT COMPLETED, go to step 24.

DTC P0967: Problem in A/T Clutch Pressure Control Solenoid Valve B

NOTE:
- Before you troubleshoot, record all freeze data and any on-board snapshot with the HDS, and review General Troubleshooting Information (see page 14-4).
- This code is caused by an electrical circuit problem and cannot be caused by a mechanical problem in the transmission.

1. Turn the ignition switch to ON (II).

2. Clear the DTC with the HDS.

3. Start the engine, and wait for at least 1 second.

4. Check for Temporary DTCs or DTCs with the HDS.

   Is DTC P0967 indicated?

   YES—Go to step 8.

   NO—Go to step 5.

5. Select Clutch Pressure Control (Linear) Solenoid Valve B in the Miscellaneous Test Menu, and test A/T clutch pressure control solenoid valve B with the HDS.

   Does the HDS indicate NORMAL?

   YES—Go to step 6.

   NO—Go to step 8.

6. In the Clutch Pressure Control Solenoid Valve Control menu, select A/T clutch pressure control solenoid valve B at 0.2 A.

7. Monitor the OBD STATUS for P0967 in the DTCs MENU with the HDS.

   Does the HDS indicate FAILED?

   YES—Go to step 8.

   NO—If the HDS indicates PASSED, intermittent failure, the system is OK at this time. Check for poor connections or loose terminals between A/T clutch pressure control solenoid valve B and the PCM. If the HDS indicates NOT COMPLETED, go to step 5.

8. Turn the ignition switch to LOCK (0).

9. Disconnect the A/T clutch pressure control solenoid valve B connector.

10. Measure the resistance between A/T clutch pressure control solenoid valve B connector terminals No. 1 and No. 2.

A/T CLUTCH PRESSURE CONTROL SOLENOID VALVE B CONNECTOR

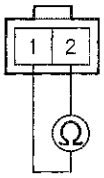

Terminal side of male terminals

Is there 3– 10 Ω ?

YES—Go to step 11.

NO—Replace A/T clutch pressure control solenoid valve B (see page 14-225), then go to step 12.

11. Check for continuity between A/T clutch pressure control solenoid valve B connector terminal No. 2 and body ground.

A/T CLUTCH PRESSURE CONTROL SOLENOID VALVE B CONNECTOR

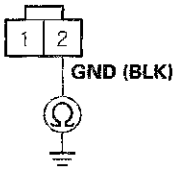

Wire side of female terminals

Is there continuity?

YES—Go to step 18.

NO—Repair open in the wire between A/T clutch pressure control solenoid valve B and body ground (G101) (see page 22-22), or repair poor ground (G101), then go to step 12.

(cont'd)

DTC Troubleshooting (cont'd)

12. Reconnect all connectors.

13. Turn the ignition switch to ON (II).

14. Clear the DTC with the HDS.

15. Start the engine, and wait for at least 1 second.

16. Check for Temporary DTCs or DTCs with the HDS.

    Is DTC P0967 indicated?

    YES—Check for poor connections or loose terminals between A/T clutch pressure control solenoid valve B and the PCM, then go to step 1.

    NO—Go to step 17.

17. Monitor the OBD STATUS for P0967 in the DTCs MENU with the HDS.

    Does the HDS indicate PASSED?

    YES—Troubleshooting is complete. If any other Temporary DTCs or DTCs were indicated in step 16, go to the indicated DTC's troubleshooting. ■

    NO—If the HDS indicates FAILED, check for poor connections or loose terminals between A/T clutch pressure control solenoid valve B and the PCM, then go to step 1. If the HDS indicates NOT COMPLETED, go to step 15.

18. Reconnect all connectors.

19. Update the PCM if it does not have the latest software (see page 11-215), or substitute a known-good PCM (see page 14-8).

20. Start the engine, and wait for at least 1 second.

21. Check for Temporary DTCs or DTCs with the HDS.

    Is DTC P0967 indicated?

    YES—Check for poor connections or loose terminals between A/T clutch pressure control solenoid valve B and the PCM. If the PCM was updated, substitute a known-good PCM (see page 14-8), then go to step 20. If the PCM was substituted, go to step 1.

    NO—Go to step 22.

22. Monitor the OBD STATUS for P0967 in the DTCs MENU with the HDS.

    Does the HDS indicate PASSED?

    YES—If the PCM was updated, troubleshooting is complete. If the PCM was substituted, replace the original PCM (see page 11-216). If any other Temporary DTCs or DTCs were indicated in step 21, go to the indicated DTC's troubleshooting. ■

    NO—If the HDS indicates FAILED, check for poor connections or loose terminals between A/T clutch pressure control solenoid valve B and the PCM. If the PCM was updated, substitute a known-good PCM (see page 14-8), then go to step 20. If the PCM was substituted, go to step 1. If the HDS indicates NOT COMPLETED, go to step 20.

DTC P0970: Problem in A/T Clutch Pressure Control Solenoid Valve C Circuit

NOTE:
- Before you troubleshoot, record all freeze data and any on-board snapshot with the HDS, and review General Troubleshooting Information (see page 14-4).
- This code is caused by an electrical circuit problem and cannot be caused by a mechanical problem in the transmission.

1. Turn the ignition switch to ON (II).

2. Clear the DTC with the HDS.

3. Start the engine, and wait for at least 1 second.

4. Check for Temporary DTCs or DTCs with the HDS.

   Is DTC P0970 indicated?

   YES—Go to step 8.

   NO—Go to step 5.

5. Select Clutch Pressure Control (Linear) Solenoid Valve C in the Miscellaneous Test Menu, and test A/T clutch pressure control solenoid valve C with the HDS.

   Does the HDS indicate NORMAL?

   YES—Go to step 6.

   NO—Go to step 8.

6. In the Clutch Pressure Control Solenoid Valve Control menu, select A/T clutch pressure control solenoid valve C at 1.0 A.

7. Monitor the OBD STATUS for P0970 in the DTCs MENU with the HDS.

   Does the HDS indicate FAILED?

   YES—Go to step 8.

   NO—If the HDS indicates PASSED, intermittent failure, the system is OK at this time. Check for poor connections or loose terminals between A/T clutch pressure control solenoid valve C and the PCM. If the HDS indicates NOT COMPLETED, go to step 5.

8. Turn the ignition switch to LOCK (0).

9. Disconnect the A/T clutch pressure control solenoid valve C connector.

10. Measure the resistance between A/T clutch pressure control solenoid valve C connector terminals No. 1 and No. 2.

A/T CLUTCH PRESSURE CONTROL SOLENOID VALVE C CONNECTOR

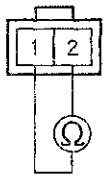

Terminal side of male terminals

Is there 3– 10 Ω ?

YES—Go to step 11.

NO—Replace A/T clutch pressure control solenoid valve C (see page 14-225), then go to step 16.

11. Check for continuity between A/T clutch pressure control solenoid valve C connector terminal No. 2 and body ground.

A/T CLUTCH PRESSURE CONTROL SOLENOID VALVE C CONNECTOR

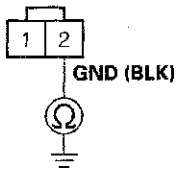

Wire side of female terminals

Is there continuity?

YES—Go to step 12.

NO—Repair open in the wire between A/T clutch pressure control solenoid valve C and body ground (G101) (see page 22-22), or repair poor ground (G101), then go to step 16.

(cont'd)

DTC Troubleshooting (cont'd)

12. Jump the SCS line with the HDS.

13. Disconnect PCM connector B (49P).

14. Check for continuity between A/T clutch pressure control solenoid valve C connector terminal No. 1 and body ground.

A/T CLUTCH PRESSURE CONTROL SOLENOID VALVE C CONNECTOR

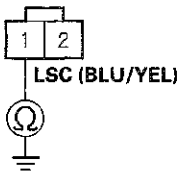

Wire side of female terminals

Is there continuity?

YES—Repair short to body ground in the wire between A/T clutch pressure control solenoid valve C connector terminal No. 1 and body ground, then go to step 16.

NO—Go to step 15.

15. Check for continuity between A/T clutch pressure control solenoid valve C connector terminal No. 1 and PCM connector terminal B26.

PCM CONNECTOR B (49P)

A/T CLUTCH PRESSURE CONTROL SOLENOID VALVE C CONNECTOR

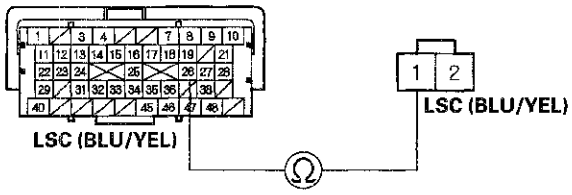

Terminal side of female terminals

Wire side of female terminals

Is there continuity?

YES—Go to step 22.

NO—Repair open in the wire between A/T clutch pressure control solenoid valve C connector terminal No. 1 and PCM connector terminal B26, then go to step 16.

16. Reconnect all connectors.

17. Turn the ignition switch to ON (II).

18. Clear the DTC with the HDS.

19. Start the engine, and wait for at least 1 second.

20. Check for Temporary DTCs or DTCs with the HDS.

    Is DTC P0970 indicated?

    YES—Check for poor connections or loose terminals between A/T clutch pressure control solenoid valve C and the PCM, then go to step 1.

    NO—Go to step 21.

21. Monitor the OBD STATUS for P0970 in the DTCs MENU with the HDS.

    Does the HDS indicate PASSED?

    YES—Troubleshooting is complete. If any other Temporary DTCs or DTCs were indicated in step 20, go to the indicated DTC's troubleshooting. ■

    NO—If the HDS indicates FAILED, check for poor connections or loose terminals between A/T clutch pressure control solenoid valve C and the PCM, then go to step 1. If the HDS indicates NOT COMPLETED, go to step 19.

22. Reconnect all connectors.

23. Update the PCM if it does not have the latest software (see page 11-215), or substitute a known-good PCM (see page 14-8).

24. Start the engine, and wait for at least 1 second.

25. Check for Temporary DTCs or DTCs with the HDS.

    Is DTC P0970 indicated?

    YES—Check for poor connections or loose terminals between A/T clutch pressure control solenoid valve C and the PCM. If the PCM was updated, substitute a known-good PCM (see page 14-8), then go to step 24. If the PCM was substituted, go to step 1.

    NO—Go to step 26.

26. Monitor the OBD STATUS for P0970 in the DTCs MENU with the HDS.

    Does the HDS indicate PASSED?

    YES—If the PCM was updated, troubleshooting is complete. If the PCM was substituted, replace the original PCM (see page 11-216). If any other Temporary DTCs or DTCs were indicated in step 25, go to the indicated DTC's troubleshooting. ■

    NO—If the HDS indicates FAILED, check for poor connections or loose terminals between A/T clutch pressure control solenoid valve C and the PCM. If the PCM was updated, substitute a known-good PCM (see page 14-8), then go to step 24. If the PCM was substituted, go to step 1. If the HDS indicates NOT COMPLETED, go to step 24.

DTC Troubleshooting (cont'd)

DTC P0971: Problem in A/T Clutch Pressure Control Solenoid Valve C

NOTE:
- Before you troubleshoot, record all freeze data and any on-board snapshot with the HDS, and review General Troubleshooting Information (see page 14-4).
- This code is caused by an electrical circuit problem and cannot be caused by a mechanical problem in the transmission.

1. Turn the ignition switch to ON (II).
2. Clear the DTC with the HDS.
3. Start the engine, and wait for at least 1 second.
4. Check for Temporary DTCs or DTCs with the HDS.

   Is DTC P0971 indicated?

   YES—Go to step 8.

   NO—Go to step 5.
5. Select Clutch Pressure Control (Linear) Solenoid Valve C in the Miscellaneous Test Menu, and test A/T clutch pressure control solenoid valve C with the HDS.

   Does the HDS indicate NORMAL?

   YES—Go to step 6.

   NO—Go to step 8.
6. In the Clutch Pressure Control Solenoid Valve Control menu, select A/T clutch pressure control solenoid valve C at 0.2 A.
7. Monitor the OBD STATUS for P0971 in the DTCs MENU with the HDS.

   Does the HDS indicate FAILED?

   YES—Go to step 8.

   NO—If the HDS indicates PASSED, intermittent failure, the system is OK at this time. Check for poor connections or loose terminals between A/T clutch pressure control solenoid valve C and the PCM. If the HDS indicates NOT COMPLETED, go to step 5.
8. Turn the ignition switch to LOCK (0).
9. Disconnect the A/T clutch pressure control solenoid valve C connector.
10. Measure the resistance between A/T clutch pressure control solenoid valve C connector terminals No. 1 and No. 2.

A/T CLUTCH PRESSURE CONTROL SOLENOID VALVE C CONNECTOR

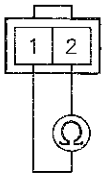

Terminal side of male terminals

Is there 3– 10 Ω ?

YES—Go to step 11.

NO—Replace A/T clutch pressure control solenoid valve C (see page 14-225), then go to step 12.

11. Check for continuity between A/T clutch pressure control solenoid valve C connector terminal No. 2 and body ground.

A/T CLUTCH PRESSURE CONTROL SOLENOID VALVE C CONNECTOR

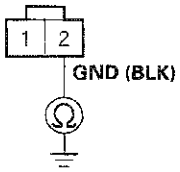

Wire side of female terminals

Is there continuity?

YES—Go to step 18.

NO—Repair open in the wire between A/T clutch pressure control solenoid valve C and body ground (G101) (see page 22-22), or repair poor ground (G101), then go to step 12.

12. Reconnect all connectors.

13. Turn the ignition switch to ON (II).

14. Clear the DTC with the HDS.

15. Start the engine, and wait for at least 1 second.

16. Check for Temporary DTCs or DTCs with the HDS.

    Is DTC P0971 indicated?

    YES—Check for poor connections or loose terminals between A/T clutch pressure control solenoid valve C and the PCM, then go to step 1.

    NO—Go to step 17.

17. Monitor the OBD STATUS for P0971 in the DTCs MENU with the HDS.

    Does the HDS indicate PASSED?

    YES—Troubleshooting is complete. If any other Temporary DTCs or DTCs were indicated in step 16, go to the indicated DTC's troubleshooting. ■

    NO—If the HDS indicates FAILED, check for poor connections or loose terminals between A/T clutch pressure control solenoid valve C and the PCM, then go to step 1. If the HDS indicates NOT COMPLETED, go to step 15.

18. Reconnect all connectors.

19. Update the PCM if it does not have the latest software (see page 11-215), or substitute a known-good PCM (see page 14-8).

20. Start the engine, and wait for at least 1 second.

21. Check for Temporary DTCs or DTCs with the HDS.

    Is DTC P0971 indicated?

    YES—Check for poor connections or loose terminals between A/T clutch pressure control solenoid valve C and the PCM. If the PCM was updated, substitute a known-good PCM (see page 14-8), then go to step 20. If the PCM was substituted, go to step 1.

    NO—Go to step 22.

22. Monitor the OBD STATUS for P0971 in the DTCs MENU with the HDS.

    Does the HDS indicate PASSED?

    YES—If the PCM was updated, troubleshooting is complete. If the PCM was substituted, replace the original PCM (see page 11-216). If any other Temporary DTCs or DTCs were indicated in step 21, go to the indicated DTC's troubleshooting. ■

    NO—If the HDS indicates FAILED, check for poor connections or loose terminals between A/T clutch pressure control solenoid valve C and the PCM. If the PCM was updated, substitute a known-good PCM (see page 14-8), then go to step 20. If the PCM was substituted, go to step 1. If the HDS indicates NOT COMPLETED, go to step 20.

DTC Troubleshooting (cont'd)

DTC P0973: Short in Shift Solenoid Valve A Circuit

NOTE:
- Before you troubleshoot, record all freeze data and any on-board snapshot with the HDS, and review General Troubleshooting Information (see page 14-4).
- This code is caused by an electrical circuit problem and cannot be caused by a mechanical problem in the transmission.

1. Turn the ignition switch to ON (II).
2. Clear the DTC with the HDS.
3. Test-drive the vehicle in 1st gear with the shift lever in D for at least 1 second.
4. Check for Temporary DTCs or DTCs with the HDS.

   Is DTC P0973 indicated?

   YES—Go to step 8.

   NO—Go to step 5.
5. Select Shift Solenoid Valve A in the Miscellaneous Test Menu, and test shift solenoid valve A with the HDS.

   Is a clicking sound heard?

   YES—Go to step 6.

   NO—Go to step 8.
6. Test-drive the vehicle in 1st gear with the shift lever in D for at least 1 second.
7. Monitor the OBD STATUS for P0973 in the DTCs MENU with the HDS.

   Does the HDS indicate FAILED?

   YES—Go to step 8.

   NO—If the HDS indicates PASSED, intermittent failure, the system is OK at this time. Check for intermittent short to body ground in the wire between shift solenoid valve A and the PCM. If the HDS indicates NOT COMPLETED, go to step 5.
8. Turn the ignition switch to LOCK (0).
9. Jump the SCS line with the HDS.
10. Disconnect PCM connectors B (49P) and C (49P).
11. Measure the resistance between PCM connector terminals B11 and C44.

PCM CONNECTORS

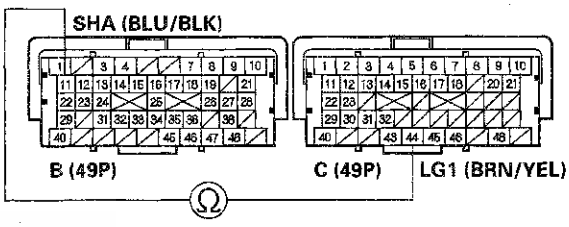

Terminal side of female terminals

Is there less than 12 Ω ?

YES—Go to step 12.

NO—Go to step 22.

12. Disconnect the shift solenoid wire harness connector.

13. Check for continuity between PCM connector terminals B11 and C44.

PCM CONNECTORS

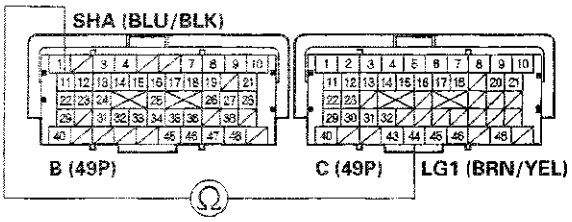

Terminal side of female terminals

Is there continuity?

YES—Repair short to body ground in the wire between PCM connector terminal B11 and the shift solenoid wire harness connector, then go to step 16.

NO—Go to step 14.

14. Inspect shift solenoid valve A and the shift solenoid wire harness (see page 14-212).

15. Replace either shift solenoid valve A or the shift solenoid wire harness (see page 14-216), whichever failed the test, then go to step 16.

16. Reconnect all connectors.

17. Turn the ignition switch to ON (II).

18. Clear the DTC with the HDS.

19. Start the engine with the shift lever in P, and wait for at least 1 second. Then test-drive the vehicle in 1st gear with the shift lever in D for at least 1 second.

20. Check for Temporary DTCs or DTCs with the HDS.

Is DTC P0973 indicated?

YES—Check for intermittent short to body ground in the wire between shift solenoid valve A and the PCM, then go to step 1.

NO—Go to step 21.

21. Monitor the OBD STATUS for P0973 in the DTCs MENU with the HDS.

Does the HDS indicate PASSED?

YES—Troubleshooting is complete. If any other Temporary DTCs or DTCs were indicated in step 20, go to the indicated DTC's troubleshooting.■

NO—If the HDS indicates FAILED, check for intermittent short to body ground in the wire between shift solenoid valve A and the PCM, then go to step 1. If the HDS indicates NOT COMPLETED, go to step 19.

22. Reconnect all connectors.

23. Update the PCM if it does not have the latest software (see page 11-215), or substitute a known-good PCM (see page 14-8).

24. Start the engine with the shift lever in P, and wait for at least 1 second. Then test-drive the vehicle in 1st gear with the shift lever in D for at least 1 second.

(cont'd)

DTC Troubleshooting (cont'd)

25. Check for Temporary DTCs or DTCs with the HDS.

    Is DTC P0973 indicated?

    YES—Check for intermittent short to body ground in the wire between shift solenoid valve A and the PCM. If the PCM was updated, substitute a known-good PCM (see page 14-8), then go to step 24. If the PCM was substituted, go to step 1.

    NO—Go to step 26.

26. Monitor the OBD STATUS for P0973 in the DTCs MENU with the HDS.

    Does the HDS indicate PASSED?

    YES—If the PCM was updated, troubleshooting is complete. If the PCM was substituted, replace the original PCM (see page 11-216). If any other Temporary DTCs or DTCs were indicated in step 25, go to the indicated DTC's troubleshooting. ■

    NO—If the HDS indicates FAILED, check for intermittent short to body ground in the wire between shift solenoid valve A and the PCM. If the PCM was updated, substitute a known-good PCM (see page 14-8), then go to step 24. If the PCM was substituted, go to step 1. If the HDS indicates NOT COMPLETED, go to step 24.

DTC P0974: Open in Shift Solenoid Valve A Circuit

NOTE:
- Before you troubleshoot, record all freeze data and any on-board snapshot with the HDS, and review General Troubleshooting Information (see page 14-4).
- This code is caused by an electrical circuit problem and cannot be caused by a mechanical problem in the transmission.

1. Turn the ignition switch to ON (II).

2. Clear the DTC with the HDS.

3. Start the engine with the shift lever in P, and wait for at least 1 second.

4. Check for Temporary DTCs or DTCs with the HDS.

   Is DTC P0974 indicated?

   YES—Go to step 8.

   NO—Go to step 5.

5. Select Shift Solenoid Valve A in the Miscellaneous Test Menu, and test shift solenoid valve A with the HDS.

   Is a clicking sound heard?

   YES—Go to step 6.

   NO—Go to step 8.

6. Start the engine with the shift lever in P, and wait for at least 1 second.

7. Monitor the OBD STATUS for P0974 in the DTCs MENU with the HDS.

   Does the HDS indicate FAILED?

   YES—Go to step 8.

   NO—If the HDS indicates PASSED, intermittent failure, the system is OK at this time. Check for poor connections or loose terminals between shift solenoid valve A and the PCM. If the HDS indicates NOT COMPLETED, go to step 5.

8. Turn the ignition switch to LOCK (0).

9. Jump the SCS line with the HDS.

10. Disconnect PCM connectors B (49P) and C (49P).

11. Measure the resistance between PCM connector terminals B11 and C44.

PCM CONNECTORS

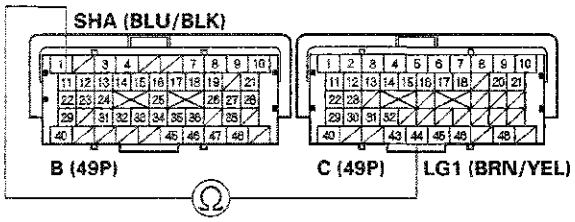

Terminal side of female terminals

Is there 12–25 Ω ?

YES—Go to step 22.

NO—Go to step 12.

12. Disconnect the shift solenoid wire harness connector.

13. Check for continuity between PCM connector terminal B11 and shift solenoid wire harness connector terminal No. 5.

SHIFT SOLENOID WIRE HARNESS CONNECTOR **PCM CONNECTOR B (49P)**

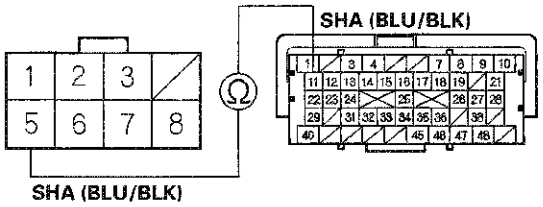

Wire side of female terminals

Terminal side of female terminals

Is there continuity?

YES—Go to step 14.

NO—Repair open in the wire between PCM connector terminal B11 and the shift solenoid wire harness connector, then go to step 16.

(cont'd)

DTC Troubleshooting (cont'd)

14. Remove the shift solenoid wire harness (see page 14-216).

15. Check for continuity between shift solenoid wire harness connector terminal No. 5 and the shift solenoid valve A connector terminal.

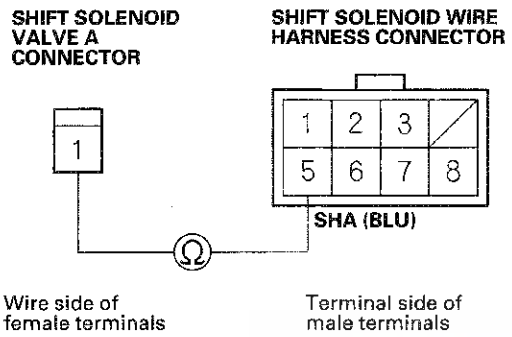

Is there continuity?

YES—Replace shift solenoid valve A (see page 14-216), then go to step 16.

NO—Replace the shift solenoid wire harness (see page 14-216), then go to step 16.

16. Reconnect all connectors.

17. Turn the ignition switch to ON (II).

18. Clear the DTC with the HDS.

19. Start the engine with the shift lever in P, and wait for at least 1 second. Then test-drive the vehicle in 1st gear with the shift lever in D for at least 1 second.

20. Check for Temporary DTCs or DTCs with the HDS.

Is DTC P0974 indicated?

YES—Check for poor connections or loose terminals between shift solenoid valve A and the PCM, then go to step 1.

NO—Go to step 21.

21. Monitor the OBD STATUS for P0974 in the DTCs MENU with the HDS.

Does the HDS indicate PASSED?

YES—Troubleshooting is complete. If any other Temporary DTCs or DTCs were indicated in step 20, go to the indicated DTC's troubleshooting. ■

NO—If the HDS indicates FAILED, check for poor connections or loose terminals between shift solenoid valve A and the PCM, then go to step 1. If the HDS indicates NOT COMPLETED, go to step 19.

22. Reconnect all connectors.

23. Update the PCM if it does not have the latest software (see page 11-215), or substitute a known-good PCM (see page 14-8).

24. Start the engine with the shift lever in P, and wait for at least 1 second. Then test-drive the vehicle in 1st gear with the shift lever in D for at least 1 second.

25. Check for Temporary DTCs or DTCs with the HDS.

    Is DTC P0974 indicated?

    YES—Check for poor connections or loose terminals between shift solenoid valve A and the PCM. If the PCM was updated, substitute a known-good PCM (see page 14-8), then go to step 24. If the PCM was substituted, go to step 1.

    NO—Go to step 26.

26. Monitor the OBD STATUS for P0974 in the DTCs MENU with the HDS.

    Does the HDS indicate PASSED?

    YES—If the PCM was updated, troubleshooting is complete. If the PCM was substituted, replace the original PCM (see page 11-216). If any other Temporary DTCs or DTCs were indicated in step 25, go to the indicated DTC's troubleshooting.■

    NO—If the HDS indicates FAILED, check for poor connections or loose terminals between shift solenoid valve A and the PCM. If the PCM was updated, substitute a known-good PCM (see page 14-8), then go to step 24. If the PCM was substituted, go to step 1. If the HDS indicates NOT COMPLETED, go to step 24.

DTC P0976: Short in Shift Solenoid Valve B Circuit

NOTE:
- Before you troubleshoot, record all freeze data and any on-board snapshot with the HDS, and review General Troubleshooting Information (see page 14-4).
- This code is caused by an electrical circuit problem and cannot be caused by a mechanical problem in the transmission.

1. Turn the ignition switch to ON (II).

2. Clear the DTC with the HDS.

3. Start the engine with the shift lever in P, and wait for at least 1 second.

4. Check for Temporary DTCs or DTCs with the HDS.

   Is DTC P0976 indicated?

   YES—Go to step 8.

   NO—Go to step 5.

5. Select Shift Solenoid Valve B in the Miscellaneous Test Menu, and test shift solenoid valve B with the HDS.

   Is a clicking sound heard?

   YES—Go to step 6.

   NO—Go to step 8.

6. Start the engine with the shift lever in P, and wait for at least 1 second.

7. Monitor the OBD STATUS for P0976 in the DTCs MENU with the HDS.

   Does the HDS indicate FAILED?

   YES—Go to step 8.

   NO—If the HDS indicates PASSED, intermittent failure, the system is OK at this time. Check for intermittent short to body ground in the wire between shift solenoid valve B and the PCM. If the HDS indicates NOT COMPLETED, go to step 5.

(cont'd)

DTC Troubleshooting (cont'd)

8. Turn the ignition switch to LOCK (0).
9. Jump the SCS line with the HDS.
10. Disconnect PCM connectors B (49P) and C (49P).
11. Measure the resistance between PCM connector terminals B12 and C44.

PCM CONNECTORS

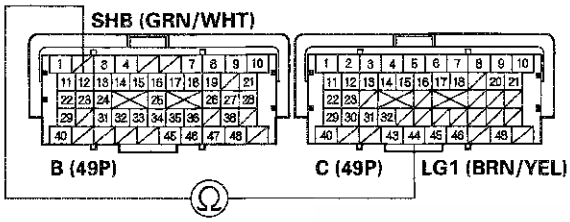

Terminal side of female terminals

Is there less than 12 Ω ?

YES—Go to step 12.

NO—Go to step 22.

12. Disconnect the shift solenoid wire harness connector.
13. Check for continuity between PCM connector terminals B12 and C44.

PCM CONNECTORS

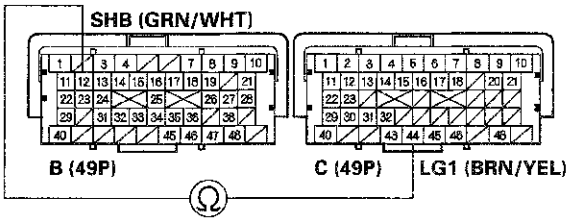

Terminal side of female terminals

Is there continuity?

YES—Repair short to body ground in the wire between PCM connector terminal B12 and the shift solenoid wire harness connector, then go to step 16.

NO—Go to step 14.

14. Inspect shift solenoid valve B and the shift solenoid wire harness (see page 14-212).
15. Replace either shift solenoid valve B or the shift solenoid wire harness (see page 14-216), whichever failed the test, then go to step 16.
16. Reconnect all connectors.
17. Turn the ignition switch to ON (II).
18. Clear the DTC with the HDS.
19. Start the engine with the shift lever in P, and wait for at least 1 second. Test-drive the vehicle with the shift lever in D through 1st to 3rd gears, then drive in 3rd gear for at least 1 second.

20. Check for Temporary DTCs or DTCs with the HDS.

    Is DTC P0976 indicated?

    YES—Check for intermittent short to body ground in the wire between shift solenoid valve B and the PCM, then go to step 1.

    NO—Go to step 21.

21. Monitor the OBD STATUS for P0976 in the DTCs MENU with the HDS.

    Does the HDS indicate PASSED?

    YES—Troubleshooting is complete. If any other Temporary DTCs or DTCs were indicated in step 20, go to the indicated DTC's troubleshooting.■

    NO—If the HDS indicates FAILED, check for intermittent short to body ground in the wire between shift solenoid valve B and the PCM, then go to step 1. If the HDS indicates NOT COMPLETED, go to step 19.

22. Reconnect all connectors.

23. Update the PCM if it does not have the latest software (see page 11-215), or substitute a known-good PCM (see page 14-8).

24. Start the engine with the shift lever in P, and wait for at least 1 second. Test-drive the vehicle with the shift lever in D through 1st to 3rd gears, then drive in 3rd gear for at least 1 second.

25. Check for Temporary DTCs or DTCs with the HDS.

    Is DTC P0976 indicated?

    YES—Check for intermittent short to body ground in the wire between shift solenoid valve B and the PCM. If the PCM was updated, substitute a known-good PCM (see page 14-8), then go to step 24. If the PCM was substituted, go to step 1.

    NO—Go to step 26.

26. Monitor the OBD STATUS for P0976 in the DTCs MENU with the HDS.

    Does the HDS indicate PASSED?

    YES—If the PCM was updated, troubleshooting is complete. If the PCM was substituted, replace the original PCM (see page 11-216). If any other Temporary DTCs or DTCs were indicated in step 25, go to the indicated DTC's troubleshooting.■

    NO—If the HDS indicates FAILED, check for intermittent short to body ground in the wire between shift solenoid valve B and the PCM. If the PCM was updated, substitute a known-good PCM (see page 14-8), then go to step 24. If the PCM was substituted, go to step 1. If the HDS indicates NOT COMPLETED, go to step 24.

DTC Troubleshooting (cont'd)

DTC P0977: Open in Shift Solenoid Valve B Circuit

NOTE:
- Before you troubleshoot, record all freeze data and any on-board snapshot with the HDS, and review General Troubleshooting Information (see page 14-4).
- This code is caused by an electrical circuit problem and cannot be caused by a mechanical problem in the transmission.

1. Turn the ignition switch to ON (II).
2. Clear the DTC with the HDS.
3. Test-drive the vehicle with the shift lever in D through 1st to 3rd gears, then drive in 3rd gear for at least 1 second.
4. Check for Temporary DTCs or DTCs with the HDS.

   Is DTC P0977 indicated?

   YES—Go to step 8.

   NO—Go to step 5.
5. Select Shift Solenoid Valve B in the Miscellaneous Test Menu, and test shift solenoid valve B with the HDS.

   Is a clicking sound heard?

   YES—Go to step 6.

   NO—Go to step 8.
6. Test-drive the vehicle with the shift lever in D through 1st to 3rd gears, then drive in 3rd gear for at least 1 second.
7. Monitor the OBD STATUS for P0977 in the DTCs MENU with the HDS.

   Does the HDS indicate FAILED?

   YES—Go to step 8.

   NO—If the HDS indicates PASSED, intermittent failure, the system is OK at this time. Check for poor connections or loose terminals between shift solenoid valve B and the PCM. If the HDS indicates NOT COMPLETED, go to step 5.
8. Turn the ignition switch to LOCK (0).
9. Jump the SCS line with the HDS.
10. Disconnect PCM connectors B (49P) and C (49P).
11. Measure the resistance between PCM connector terminals B12 and C44.

PCM CONNECTORS

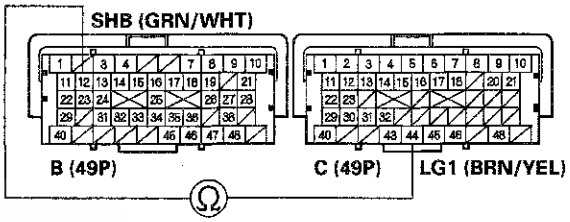

Terminal side of female terminals

Is there 12–25 Ω ?

YES—Go to step 22.

NO—Go to step 12.

12. Disconnect the shift solenoid wire harness connector.

13. Check for continuity between PCM connector terminal B12 and shift solenoid wire harness connector terminal No. 2.

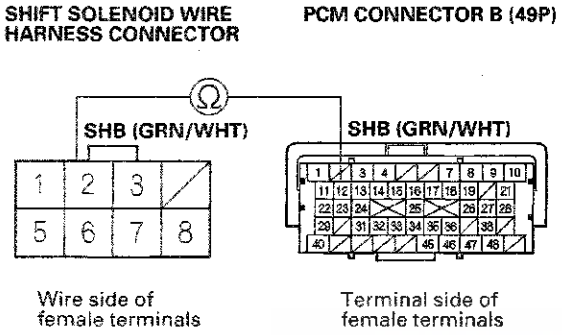

Is there continuity?

YES—Go to step 14.

NO—Repair open in the wire between PCM connector terminal B12 and the shift solenoid wire harness connector, then go to step 16.

14. Remove the shift solenoid wire harness (see page 14-216).

15. Check for continuity between shift solenoid wire harness connector terminal No. 2 and the shift solenoid valve B connector terminal.

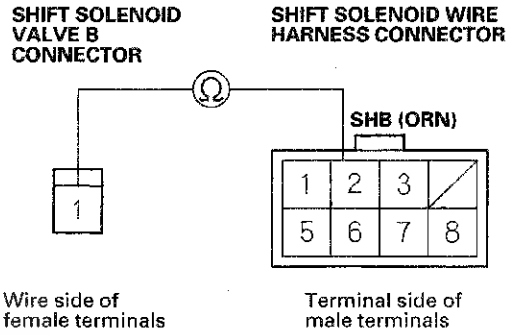

Is there continuity?

YES—Replace shift solenoid valve B (see page 14-216), then go to step 16.

NO—Replace the shift solenoid wire harness (see page 14-216), then go to step 16.

(cont'd)

DTC Troubleshooting (cont'd)

16. Reconnect all connectors.

17. Turn the ignition switch to ON (II).

18. Clear the DTC with the HDS.

19. Start the engine with the shift lever in P, and wait for at least 1 second. Test-drive the vehicle with the shift lever in D through 1st to 3rd gears, then drive in 3rd gear for at least 1 second.

20. Check for Temporary DTCs or DTCs with the HDS.

    Is DTC P0977 indicated?

    YES—Check for poor connections or loose terminals between shift solenoid valve B and the PCM, then go to step 1.

    NO—Go to step 21.

21. Monitor the OBD STATUS for P0977 in the DTCs MENU with the HDS.

    Does the HDS indicate PASSED?

    YES—Troubleshooting is complete. If any other Temporary DTCs or DTCs were indicated in step 20, go to the indicated DTC's troubleshooting.■

    NO—If the HDS indicates FAILED, check for poor connections or loose terminals between shift solenoid valve B and the PCM, then go to step 1. If the HDS indicates NOT COMPLETED, go to step 19.

22. Reconnect all connectors.

23. Update the PCM if it does not have the latest software (see page 11-215), or substitute a known-good PCM (see page 14-8).

24. Start the engine with the shift lever in P, and wait for at least 1 second. Test-drive the vehicle with the shift lever in D through 1st to 3rd gears, then drive in 3rd gear for at least 1 second.

25. Check for Temporary DTCs or DTCs with the HDS.

    Is DTC P0977 indicated?

    YES—Check for poor connections or loose terminals between shift solenoid valve B and the PCM. If the PCM was updated, substitute a known-good PCM (see page 14-8), then go to step 24. If the PCM was substituted, go to step 1.

    NO—Go to step 26.

26. Monitor the OBD STATUS for P0977 in the DTCs MENU with the HDS.

    Does the HDS indicate PASSED?

    YES—If the PCM was updated, troubleshooting is complete. If the PCM was substituted, replace the original PCM (see page 11-216). If any other Temporary DTCs or DTCs were indicated in step 25, go to the indicated DTC's troubleshooting.■

    NO—If the HDS indicates FAILED, check for poor connections or loose terminals between shift solenoid valve B and the PCM. If the PCM was updated, substitute a known-good PCM (see page 14-8), then go to step 24. If the PCM was substituted, go to step 1. If the HDS indicates NOT COMPLETED, go to step 24.

DTC P0979: Short in Shift Solenoid Valve C Circuit

NOTE:
- Before you troubleshoot, record all freeze data and any on-board snapshot with the HDS, and review General Troubleshooting Information (see page 14-4).
- This code is caused by an electrical circuit problem and cannot be caused by a mechanical problem in the transmission.

1. Turn the ignition switch to ON (II).

2. Clear the DTC with the HDS.

3. Test-drive the vehicle in 1st gear with the shift lever in D for at least 1 second.

4. Check for Temporary DTCs or DTCs with the HDS.

   Is DTC P0979 indicated?

   YES—Go to step 8.

   NO—Go to step 5.

5. Select Shift Solenoid Valve C in the Miscellaneous Test Menu, and test shift solenoid valve C with the HDS.

   Is a clicking sound heard?

   YES—Go to step 6.

   NO—Go to step 8.

6. Test-drive the vehicle in 1st gear with the shift lever in D for at least 1 second.

7. Monitor the OBD STATUS for P0979 in the DTCs MENU with the HDS.

   Does the HDS indicate FAILED?

   YES—Go to step 8.

   NO—If the HDS indicates PASSED, intermittent failure, the system is OK at this time. Check for intermittent short to body ground in the wire between shift solenoid valve C and the PCM. If the HDS indicates NOT COMPLETED, go to step 5.

8. Turn the ignition switch to LOCK (0).

9. Jump the SCS line with the HDS.

10. Disconnect PCM connectors B (49P) and C (49P).

11. Measure the resistance between PCM connector terminals B21 and C44.

PCM CONNECTORS

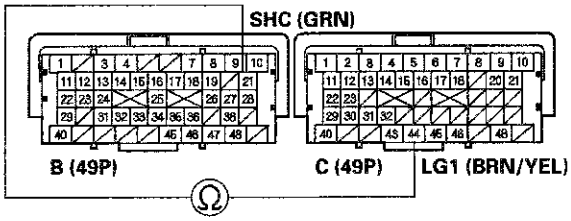

Terminal side of female terminals

Is there less than 12 Ω ?

YES—Go to step 12.

NO—Go to step 22.

(cont'd)

DTC Troubleshooting (cont'd)

12. Disconnect the shift solenoid wire harness connector.

13. Check for continuity between PCM connector terminals B21 and C44.

PCM CONNECTORS

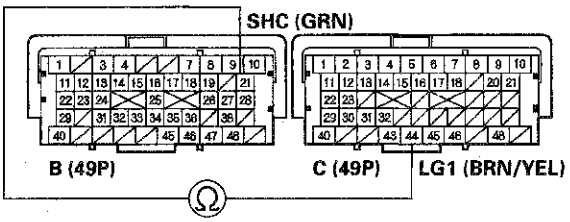

Terminal side of female terminals

Is there continuity?

YES—Repair short to body ground in the wire between PCM connector terminal B21 and the shift solenoid wire harness connector, then go to step 16.

NO—Go to step 14.

14. Inspect shift solenoid valve C and the shift solenoid wire harness (see page 14-212).

15. Replace either shift solenoid valve C or the shift solenoid wire harness (see page 14-216), whichever failed the test, then go to step 16.

16. Reconnect all connectors.

17. Turn the ignition switch to ON (II).

18. Clear the DTC with the HDS.

19. Start the engine with the shift lever in P, and wait for at least 1 second. Then test-drive the vehicle in 1st gear with the shift lever in D for at least 1 second.

20. Check for Temporary DTCs or DTCs with the HDS.

Is DTC P0979 indicated?

YES—Check for intermittent short to body ground in the wire between shift solenoid valve C and the PCM, then go to step 1.

NO—Go to step 21.

21. Monitor the OBD STATUS for P0979 in the DTCs MENU with the HDS.

Does the HDS indicate PASSED?

YES—Troubleshooting is complete. If any other Temporary DTCs or DTCs were indicated in step 20, go to the indicated DTC's troubleshooting. ■

NO—If the HDS indicates FAILED, check for intermittent short to body ground in the wire between shift solenoid valve C and the PCM, then go to step 1. If the HDS indicates NOT COMPLETED, go to step 19.

22. Reconnect all connectors.

23. Update the PCM if it does not have the latest software (see page 11-215), or substitute a known-good PCM (see page 14-8).

24. Start the engine with the shift lever in P, and wait for at least 1 second. Then test-drive the vehicle in 1st gear with the shift lever in D for at least 1 second.

25. Check for Temporary DTCs or DTCs with the HDS.

    Is DTC P0979 indicated?

    YES—Check for intermittent short to body ground in the wire between shift solenoid valve C and the PCM. If the PCM was updated, substitute a known-good PCM (see page 14-8), then go to step 24. If the PCM was substituted, go to step 1.

    NO—Go to step 26.

26. Monitor the OBD STATUS for P0979 in the DTCs MENU with the HDS.

    Does the HDS indicate PASSED?

    YES—If the PCM was updated, troubleshooting is complete. If the PCM was substituted, replace the original PCM (see page 11-216). If any other Temporary DTCs or DTCs were indicated in step 25, go to the indicated DTC's troubleshooting.■

    NO—If the HDS indicates FAILED, check for intermittent short to body ground in the wire between shift solenoid valve C and the PCM. If the PCM was updated, substitute a known-good PCM (see page 14-8), then go to step 24. If the PCM was substituted, go to step 1. If the HDS indicates NOT COMPLETED, go to step 24.

DTC P0980: Open in Shift Solenoid Valve C Circuit

NOTE:
- Before you troubleshoot, record all freeze data and any on-board snapshot with the HDS, and review General Troubleshooting Information (see page 14-4).
- This code is caused by an electrical circuit problem and cannot be caused by a mechanical problem in the transmission.

1. Turn the ignition switch to ON (II).

2. Clear the DTC with the HDS.

3. Start the engine with the shift lever in P, and wait for at least 1 second.

4. Check for Temporary DTCs or DTCs with the HDS.

   Is DTC P0980 indicated?

   YES—Go to step 8.

   NO—Go to step 5.

5. Select Shift Solenoid Valve C in the Miscellaneous Test Menu, and test shift solenoid valve C with the HDS.

   Is a clicking sound heard?

   YES—Go to step 6.

   NO—Go to step 8.

6. Start the engine with the shift lever in P, and wait for at least 1 second.

7. Monitor the OBD STATUS for P0980 in the DTCs MENU with the HDS.

   Does the HDS indicate FAILED?

   YES—Go to step 8.

   NO—If the HDS indicates PASSED, intermittent failure, the system is OK at this time. Check for poor connections or loose terminals between shift solenoid valve C and the PCM. If the HDS indicates NOT COMPLETED, go to step 5.

(cont'd)

DTC Troubleshooting (cont'd)

8. Turn the ignition switch to LOCK (0).
9. Jump the SCS line with the HDS.
10. Disconnect PCM connectors A (49P) and C (49P).
11. Turn the ignition switch to ON (II).
12. Measure the voltage between PCM connector terminals A1 and C44.

PCM CONNECTORS

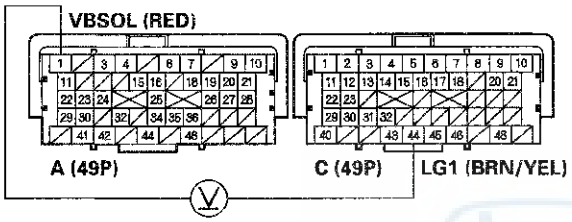

Terminal side of female terminals

Is there battery voltage?

YES—Go to step 13.

NO—Check for a blown No. 10 fuse (10 A) in the driver's under-dash fuse/relay box. If the fuse is OK, repair open in the wire between PCM connector terminal A1 and the driver's under-dash fuse/relay box, then go to step 21.

13. Turn the ignition switch to LOCK (0).
14. Jump the SCS line with the HDS.
15. Disconnect PCM connector B (49P).
16. Measure the resistance between PCM connector terminals B21 and C44.

PCM CONNECTORS

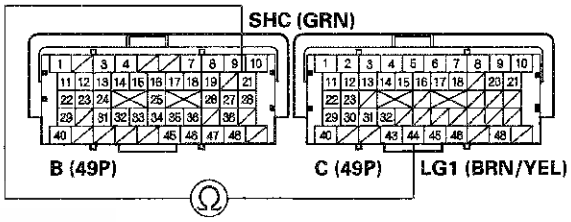

Terminal side of female terminals

Is there 12—25 Ω ?

YES—Go to step 27.

NO—Go to step 17.

17. Disconnect the shift solenoid wire harness connector.

18. Check for continuity between PCM connector terminal B21 and shift solenoid wire harness connector terminal No. 1.

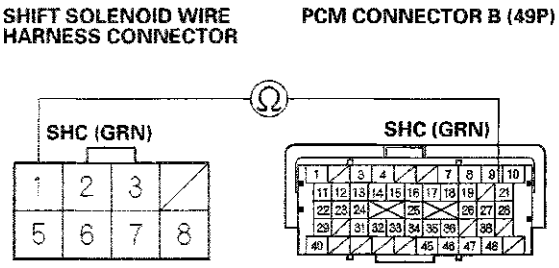

Is there continuity?

YES—Go to step 19.

NO—Repair open in the wire between PCM connector terminal B21 and the shift solenoid wire harness connector, then go to step 21.

19. Remove the shift solenoid wire harness (see page 14-216).

20. Check for continuity between shift solenoid wire harness connector terminal No. 1 and the shift solenoid valve C connector terminal.

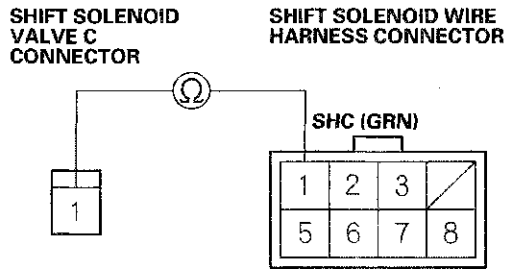

Is there continuity?

YES—Replace shift solenoid valve C (see page 14-216), then go to step 21.

NO—Replace the shift solenoid wire harness (see page 14-216), then go to step 21.

21. Reconnect all connectors.

22. Turn the ignition switch to ON (II).

23. Clear the DTC with the HDS.

24. Start the engine with the shift lever in P, and wait for at least 1 second. Then test-drive the vehicle in 1st gear with the shift lever in D for at least 1 second.

25. Check for Temporary DTCs or DTCs with the HDS.

Is DTC P0980 indicated?

YES—Check for poor connections or loose terminals between shift solenoid valve C and the PCM, then go to step 1.

NO—Go to step 26.

(cont'd)

DTC Troubleshooting (cont'd)

26. Monitor the OBD STATUS for P0980 in the DTCs MENU with the HDS.

    Does the HDS indicate PASSED?

    YES—Troubleshooting is complete. If any other Temporary DTCs or DTCs were indicated in step 25, go to the indicated DTC's troubleshooting. ■

    NO—If the HDS indicates FAILED, check for poor connections or loose terminals between shift solenoid valve C and the PCM, then go to step 1. If the HDS indicates NOT COMPLETED, go to step 24.

27. Reconnect all connectors.

28. Update the PCM if it does not have the latest software (see page 11-215), or substitute a known-good PCM (see page 14-8).

29. Start the engine with the shift lever in P, and wait for at least 1 second. Then test-drive the vehicle in 1st gear with the shift lever in D for at least 1 second.

30. Check for Temporary DTCs or DTCs with the HDS.

    Is DTC P0980 indicated?

    YES—Check for poor connections or loose terminals between shift solenoid valve C and the PCM. If the PCM was updated, substitute a known-good PCM (see page 14-8), then go to step 29. If the PCM was substituted, go to step 1.

    NO—Go to step 31.

31. Monitor the OBD STATUS for P0980 in the DTCs MENU with the HDS.

    Does the HDS indicate PASSED?

    YES—If the PCM was updated, troubleshooting is complete. If the PCM was substituted, replace the original PCM (see page 11-216). If any other Temporary DTCs or DTCs were indicated in step 30, go to the indicated DTC's troubleshooting. ■

    NO—If the HDS indicates FAILED, check for poor connections or loose terminals between shift solenoid valve C and the PCM. If the PCM was updated, substitute a known-good PCM (see page 14-8), then go to step 29. If the PCM was substituted, go to step 1. If the HDS indicates NOT COMPLETED, go to step 29.

DTC P0982: Short in Shift Solenoid Valve D Circuit

NOTE:
- Before you troubleshoot, record all freeze data and any on-board snapshot with the HDS, and review General Troubleshooting Information (see page 14-4).
- This code is caused by an electrical circuit problem and cannot be caused by a mechanical problem in the transmission.

1. Turn the ignition switch to ON (II).

2. Clear the DTC with the HDS.

3. Test-drive the vehicle in 2nd gear with the shift lever in D for at least 1 second.

4. Check for Temporary DTCs or DTCs with the HDS.

   Is DTC P0982 indicated?

   YES—Go to step 8.

   NO—Go to step 5.

5. Select Shift Solenoid Valve D in the Miscellaneous Test Menu, and test shift solenoid valve D with the HDS.

   Is a clicking sound heard?

   YES—Go to step 6.

   NO—Go to step 8.

6. Test-drive the vehicle in 2nd gear with the shift lever in D for at least 1 second.

7. Monitor the OBD STATUS for P0982 in the DTCs MENU with the HDS.

   Does the HDS indicate FAILED?

   YES—Go to step 8.

   NO—If the HDS indicates PASSED, intermittent failure, the system is OK at this time. Check for intermittent short to body ground in the wire between shift solenoid valve D and the PCM. If the HDS indicates NOT COMPLETED, go to step 5.

8. Turn the ignition switch to LOCK (0).

9. Jump the SCS line with the HDS.

10. Disconnect PCM connectors B (49P) and C (49P).

11. Measure the resistance between PCM connector terminals B27 and C44.

PCM CONNECTORS

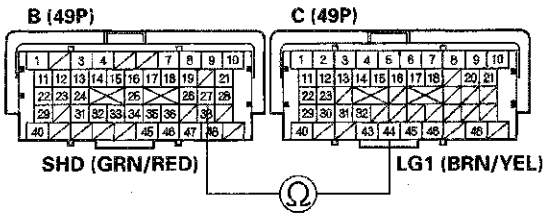

Terminal side of female terminals

Is there less than 12 Ω ?

YES—Go to step 12.

NO—Go to step 22.

(cont'd)

DTC Troubleshooting (cont'd)

12. Disconnect the shift solenoid wire harness connector.

13. Check for continuity between PCM connector terminals B27 and C44.

PCM CONNECTORS

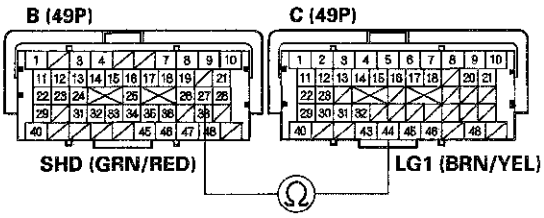

Terminal side of female terminals

Is there continuity?

YES—Repair short to body ground in the wire between PCM connector terminal B27 and the shift solenoid wire harness connector, then go to step 16.

NO—Go to step 14.

14. Inspect shift solenoid valve D and the shift solenoid wire harness (see page 14-212).

15. Replace either shift solenoid valve D or the shift solenoid wire harness (see page 14-216), whichever failed the test, then go to step 16.

16. Reconnect all connectors.

17. Turn the ignition switch to ON (II).

18. Clear the DTC with the HDS.

19. Start the engine with the shift lever in P, and wait for at least 1 second. Then test-drive the vehicle in 2nd gear with the shift lever in D for at least 1 second.

20. Check for Temporary DTCs or DTCs with the HDS.

Is DTC P0982 indicated?

YES—Check for intermittent short to body ground in the wire between shift solenoid valve D and the PCM, then go to step 1.

NO—Go to step 21.

21. Monitor the OBD STATUS for P0982 in the DTCs MENU with the HDS.

Does the HDS indicate PASSED?

YES—Troubleshooting is complete. If any other Temporary DTCs or DTCs were indicated in step 20, go to the indicated DTC's troubleshooting. ■

NO—If the HDS indicates FAILED, check for intermittent short to body ground in the wire between shift solenoid valve D and the PCM, then go to step 1. If the HDS indicates NOT COMPLETED, go to step 19.

22. Reconnect all connectors.

23. Update the PCM if it does not have the latest software (see page 11-215), or substitute a known-good PCM (see page 14-8).

24. Start the engine with the shift lever, and wait for at least 1 second. Test-drive the vehicle in 2nd gear with the shift lever in D for at least 1 second.

25. Check for Temporary DTCs or DTCs with the HDS.

    Is DTC P0982 indicated?

    YES—Check for intermittent short to body ground in the wire between shift solenoid valve D and the PCM. If the PCM was updated, substitute a known-good PCM (see page 14-8), then go to step 24. If the PCM was substituted, go to step 1.

    NO—Go to step 26.

26. Monitor the OBD STATUS for P0982 in the DTCs MENU with the HDS.

    Does the HDS indicate PASSED?

    YES—If the PCM was updated, troubleshooting is complete. If the PCM was substituted, replace the original PCM (see page 11-216). If any other Temporary DTCs or DTCs were indicated in step 25, go to the indicated DTC's troubleshooting. ■

    NO—If the HDS indicates FAILED, check for intermittent short to body ground in the wire between shift solenoid valve D and the PCM. If the PCM was updated, substitute a known-good PCM (see page 14-8), then go to step 24. If the PCM was substituted, go to step 1. If the HDS indicates NOT COMPLETED, go to step 24.

DTC P0983: Open in Shift Solenoid Valve D Circuit

NOTE:
- Before you troubleshoot, record all freeze data and any on-board snapshot with the HDS, and review General Troubleshooting Information (see page 14-4).
- This code is caused by an electrical circuit problem and cannot be caused by a mechanical problem in the transmission.

1. Turn the ignition switch to ON (II).

2. Clear the DTC with the HDS.

3. Start the engine with the shift lever in P, and wait for at least 1 second.

4. Check for Temporary DTCs or DTCs with the HDS.

   Is DTC P0983 indicated?

   YES—Go to step 8.

   NO—Go to step 5.

5. Select Shift Solenoid Valve D in the Miscellaneous Test Menu, and test shift solenoid valve D with the HDS.

   Is a clicking sound heard?

   YES—Go to step 6.

   NO—Go to step 8.

6. Start the engine with the shift lever in P, and wait for at least 1 second.

7. Monitor the OBD STATUS for P0983 in the DTCs MENU with the HDS.

   Does the HDS indicate FAILED?

   YES—Go to step 8.

   NO—If the HDS indicates PASSED, intermittent failure, the system is OK at this time. Check for poor connections or loose terminals between shift solenoid valve D and the PCM. If the HDS indicates NOT COMPLETED, go to step 5.

(cont'd)

DTC Troubleshooting (cont'd)

8. Turn the ignition switch to LOCK (0).
9. Jump the SCS line with the HDS.
10. Disconnect PCM connectors A (49P) and C (49P).
11. Turn the ignition switch to ON (II).
12. Measure the voltage between PCM connector terminals A1 and C44.

PCM CONNECTORS

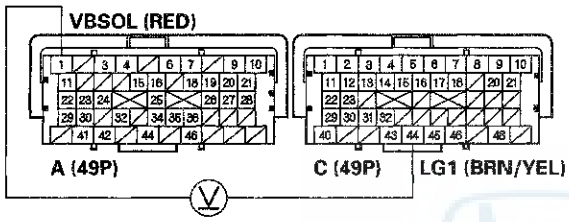

Terminal side of female terminals

Is there battery voltage?

YES—Go to step 13.

NO—Check for a blown No. 10 fuse (10 A) in the driver's under-dash fuse/relay box. If the fuse is OK, repair open in the wire between PCM connector terminal A1 and the driver's under-dash fuse/relay box, then go to step 21.

13. Turn the ignition switch to LOCK (0).
14. Jump the SCS line with the HDS.
15. Disconnect PCM connector B (49P).
16. Measure the resistance between PCM connector terminals B27 and C44.

PCM CONNECTORS

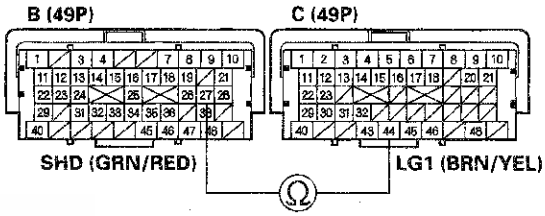

Terminal side of female terminals

Is there 12—25 Ω ?

YES—Go to step 27.

NO—Go to step 17.

17. Disconnect the shift solenoid wire harness connector.

18. Check for continuity between PCM connector terminal B27 and shift solenoid wire harness connector terminal No. 8.

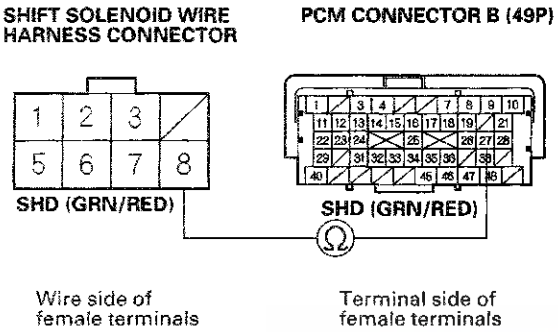

Is there continuity?

YES—Go to step 19.

NO—Repair open in the wire between PCM connector terminal B27 and the shift solenoid wire harness connector, then go to step 21.

19. Remove the shift solenoid wire harness (see page 14-216).

20. Check for continuity between shift solenoid wire harness connector terminal No. 8 and the shift solenoid valve D connector terminal.

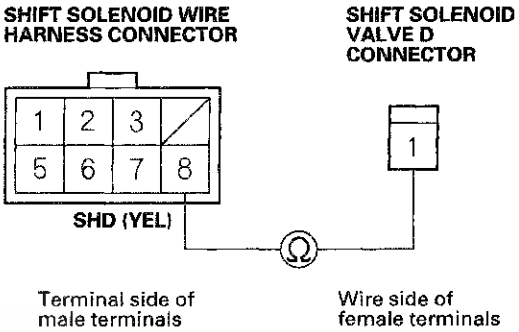

Is there continuity?

YES—Replace shift solenoid valve D (see page 14-216), then go to step 21.

NO—Replace the shift solenoid wire harness (see page 14-216), then go to step 21.

21. Reconnect all connectors.

22. Turn the ignition switch to ON (II).

23. Clear the DTC with the HDS.

24. Start the engine with the shift lever in P, and wait for at least 1 second. Then test-drive the vehicle in 2nd gear with the shift lever in D for at least 1 second.

25. Check for Temporary DTCs or DTCs with the HDS.

Is DTC P0983 indicated?

YES—Check for poor connections or loose terminals between shift solenoid valve D and the PCM, then go to step 1.

NO—Go to step 26.

(cont'd)

DTC Troubleshooting (cont'd)

26. Monitor the OBD STATUS for P0983 in the DTCs MENU with the HDS.

    Does the HDS indicate PASSED?

    YES—Troubleshooting is complete. If any other Temporary DTCs or DTCs were indicated in step 25, go to the indicated DTC's troubleshooting.■

    NO—If the HDS indicates FAILED, check for poor connections or loose terminals between shift solenoid valve D and the PCM, then go to step 1. If the HDS indicates NOT COMPLETED, go to step 24.

27. Reconnect all connectors.

28. Update the PCM if it does not have the latest software (see page 11-215), or substitute a known-good PCM (see page 14-8).

29. Start the engine with the shift lever in P, and wait for at least 1 second. Then test-drive the vehicle in 2nd gear with the shift lever in D for at least 1 second.

30. Check for Temporary DTCs or DTCs with the HDS.

    Is DTC P0983 indicated?

    YES—Check for poor connections or loose terminals between shift solenoid valve D and the PCM. If the PCM was updated, substitute a known-good PCM (see page 14-8), then go to step 29. If the PCM was substituted, go to step 1.

    NO—Go to step 31.

31. Monitor the OBD STATUS for P0983 in the DTCs MENU with the HDS.

    Does the HDS indicate PASSED?

    YES—If the PCM was updated, troubleshooting is complete. If the PCM was substituted, replace the original PCM (see page 11-216). If any other Temporary DTCs or DTCs were indicated in step 30, go to the indicated DTC's troubleshooting.■

    NO—If the HDS indicates FAILED, check for poor connections or loose terminals between shift solenoid valve D and the PCM. If the PCM was updated, substitute a known-good PCM (see page 14-8), then go to step 29. If the PCM was substituted, go to step 1. If the HDS indicates NOT COMPLETED, go to step 29.

DTC P0985: Short in Shift Solenoid Valve E Circuit

NOTE:
- Before you troubleshoot, record all freeze data and any on-board snapshot with the HDS, and review General Troubleshooting Information (see page 14-4).
- This code is caused by an electrical circuit problem and cannot be caused by a mechanical problem in the transmission.

1. Turn the ignition switch to ON (II).

2. Clear the DTC with the HDS.

3. Start the engine with the shift lever in P, and wait for at least 1 second.

4. Check for Temporary DTCs or DTCs with the HDS.

   Is DTC P0985 indicated?

   YES—Go to step 8.

   NO—Go to step 5.

5. Select Shift Solenoid Valve E in the Miscellaneous Test Menu, and test shift solenoid valve E with the HDS.

   Is a clicking sound heard?

   YES—Go to step 6.

   NO—Go to step 8.

6. Start the engine with the shift lever in P, and wait for at least 1 second.

7. Monitor the OBD STATUS for P0985 in the DTCs MENU with the HDS.

   Does the HDS indicate FAILED?

   YES—Go to step 8.

   NO—If the HDS indicates PASSED, intermittent failure, the system is OK at this time. Check for intermittent short to body ground in the wire between shift solenoid valve E and the PCM. If the HDS indicates NOT COMPLETED, go to step 5.

8. Turn the ignition switch to LOCK (0).

9. Jump the SCS line with the HDS.

10. Disconnect PCM connectors B (49P) and C (49P).

11. Measure the resistance between PCM connector terminals B25 and C44.

PCM CONNECTORS

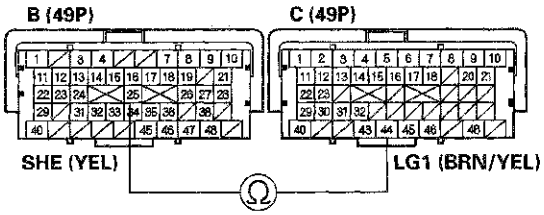

Terminal side of female terminals

Is there less than 12 Ω ?

YES—Go to step 12.

NO—Go to step 22.

(cont'd)

DTC Troubleshooting (cont'd)

12. Disconnect the shift solenoid wire harness connector.

13. Check for continuity between PCM connector terminals B25 and C44.

PCM CONNECTORS

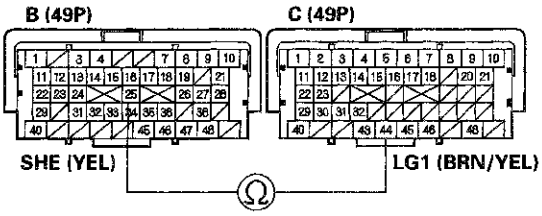

Terminal side of female terminals

Is there continuity?

YES—Repair short to body ground in the wire between PCM connector terminal B25 and the shift solenoid wire harness connector, then go to step 16.

NO—Go to step 14.

14. Inspect shift solenoid valve E and the shift solenoid wire harness (see page 14-212).

15. Replace either shift solenoid valve E or the shift solenoid wire harness (see page 14-216), whichever failed the test, then go to step 16.

16. Reconnect all connectors.

17. Turn the ignition switch to ON (II).

18. Clear the DTC with the HDS.

19. Start the engine with the shift lever in P, and wait for at least 1 second. Then shift to N, and wait for at least 1 second.

20. Check for Temporary DTCs or DTCs with the HDS.

Is DTC P0985 indicated?

YES—Check for intermittent short to body ground in the wire between shift solenoid valve E and the PCM, then go to step 1.

NO—Go to step 21.

21. Monitor the OBD STATUS for P0985 in the DTCs MENU with the HDS.

Does the HDS indicate PASSED?

YES—Troubleshooting is complete. If any other Temporary DTCs or DTCs were indicated in step 20, go to the indicated DTC's troubleshooting. ■

NO—If the HDS indicates FAILED, check for intermittent short to body ground in the wire between shift solenoid valve E and the PCM, then go to step 1. If the HDS indicates NOT COMPLETED, go to step 19.

22. Reconnect all connectors.

23. Update the PCM if it does not have the latest software (see page 11-215), or substitute a known-good PCM (see page 14-8).

24. Start the engine with the shift lever in P, and wait for at least 1 second. Then shift to N, and wait for at least 1 second.

25. Check for Temporary DTCs or DTCs with the HDS.

Is DTC P0985 indicated?

YES—Check for intermittent short to body ground in the wire between shift solenoid valve E and the PCM. If the PCM was updated, substitute a known-good PCM (see page 14-8), then go to step 24. If the PCM was substituted, go to step 1.

NO—Go to step 26.

26. Monitor the OBD STATUS for P0985 in the DTCs MENU with the HDS.

Does the HDS indicate PASSED?

YES—If the PCM was updated, troubleshooting is complete. If the PCM was substituted, replace the original PCM (see page 11-216). If any other Temporary DTCs or DTCs were indicated in step 25, go to the indicated DTC's troubleshooting. ■

NO—If the HDS indicates FAILED, check for intermittent short to body ground in the wire between shift solenoid valve E and the PCM. If the PCM was updated, substitute a known-good PCM (see page 14-8), then go to step 24. If the PCM was substituted, go to step 1. If the HDS indicates NOT COMPLETED, go to step 24.

DTC P0986: Open in Shift Solenoid Valve E Circuit

NOTE:
- Before you troubleshoot, record all freeze data and any on-board snapshot with the HDS, and review General Troubleshooting Information (see page 14-4).
- This code is caused by an electrical circuit problem and cannot be caused by a mechanical problem in the transmission.

1. Turn the ignition switch to ON (II).

2. Clear the DTC with the HDS.

3. Start the engine with the shift lever in N, and wait for at least 1 second.

4. Check for Temporary DTCs or DTCs with the HDS.

Is DTC P0986 indicated?

YES—Go to step 8.

NO—Go to step 5.

5. Select Shift Solenoid Valve E in the Miscellaneous Test Menu, and test shift solenoid valve E with the HDS.

Is a clicking sound heard?

YES—Go to step 6.

NO—Go to step 8.

6. Start the engine with the shift lever in N, and wait for at least 1 second.

7. Monitor the OBD STATUS for P0986 in the DTCs MENU with the HDS.

Does the HDS indicate FAILED?

YES—Go to step 8.

NO—If the HDS indicates PASSED, intermittent failure, the system is OK at this time. Check for poor connections or loose terminals between shift solenoid valve E and the PCM. If the HDS indicates NOT COMPLETED, go to step 5.

(cont'd)

DTC Troubleshooting (cont'd)

8. Turn the ignition switch to LOCK (0).
9. Jump the SCS line with the HDS.
10. Disconnect PCM connectors B (49P) and C (49P).
11. Measure the resistance between PCM connector terminals B25 and C44.

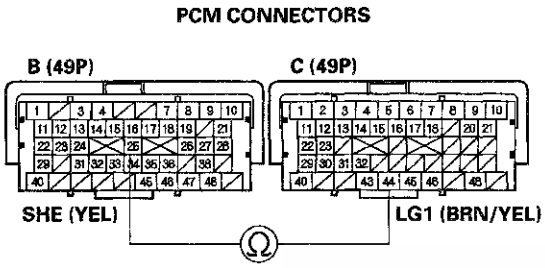

Terminal side of female terminals

Is there 12–25 Ω ?

YES—Go to step 22.

NO—Go to step 12.

12. Disconnect the shift solenoid wire harness connector.
13. Check for continuity between PCM connector terminal B25 and shift solenoid wire harness connector terminal No. 3.

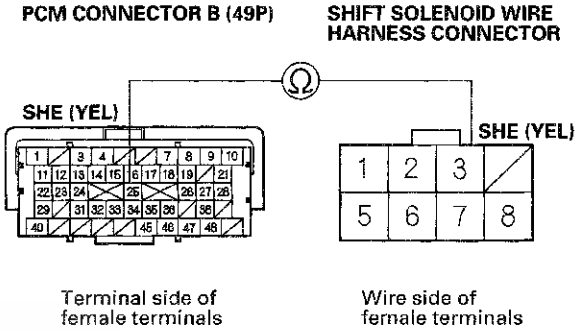

Is there continuity?

YES—Go to step 14.

NO—Repair open in the wire between PCM connector terminal B25 and the shift solenoid wire harness connector, then go to step 16.

14. Remove the shift solenoid wire harness (see page 14-216).

15. Check for continuity between shift solenoid wire harness connector terminal No. 3 and the shift solenoid valve E connector terminal.

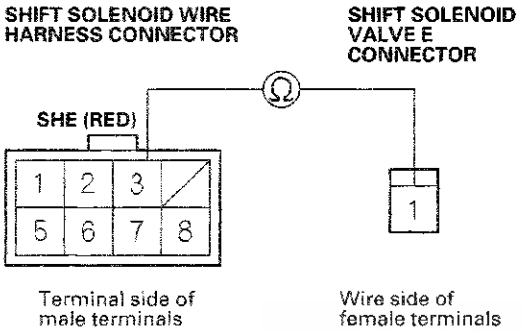

Is there continuity?

YES—Replace shift solenoid valve E (see page 14-216), then go to step 16.

NO—Replace the shift solenoid wire harness (see page 14-216), then go to step 16.

16. Reconnect all connectors.

17. Turn the ignition switch to ON (II).

18. Clear the DTC with the HDS.

19. Start the engine, with the shift lever in P, and wait for at least 1 second. Then shift to N, and wait for at least 1 second.

20. Check for Temporary DTCs or DTCs with the HDS.

Is DTC P0986 indicated?

YES—Check for poor connections or loose terminals between shift solenoid valve E and the PCM, then go to step 1.

NO—Go to step 21.

21. Monitor the OBD STATUS for P0986 in the DTCs MENU with the HDS.

Does the HDS indicate PASSED?

YES—Troubleshooting is complete. If any other Temporary DTCs or DTCs were indicated in step 20, go to the indicated DTC's troubleshooting. ■

NO—If the HDS indicates FAILED, check for poor connections or loose terminals between shift solenoid valve E and the PCM, then go to step 1. If the HDS indicates NOT COMPLETED, go to step 19.

(cont'd)

DTC Troubleshooting (cont'd)

22. Reconnect all connectors.

23. Update the PCM if it does not have the latest software (see page 11-215), or substitute a known-good PCM (see page 14-8).

24. Start the engine, with the shift lever in P, and wait for at least 1 second. Then shift to N, and wait for at least 1 second.

25. Check for Temporary DTCs or DTCs with the HDS.

    Is DTC P0986 indicated?

    YES—Check for poor connections or loose terminals between shift solenoid valve E and the PCM. If the PCM was updated, substitute a known-good PCM (see page 14-8), then go to step 24. If the PCM was substituted, go to step 1.

    NO—Go to step 26.

26. Monitor the OBD STATUS for P0986 in the DTCs MENU with the HDS.

    Does the HDS indicate PASSED?

    YES—If the PCM was updated, troubleshooting is complete. If the PCM was substituted, replace the original PCM (see page 11-216). If any other Temporary DTCs or DTCs were indicated in step 25, go to the indicated DTC's troubleshooting. ■

    NO—If the HDS indicates FAILED, check for poor connections or loose terminals between shift solenoid valve E and the PCM. If the PCM was updated, substitute a known-good PCM (see page 14-8), then go to step 24. If the PCM was substituted, go to step 1. If the HDS indicates NOT COMPLETED, go to step 24.

DTC P16C0: PCM A/T Control System Incomplete Update

NOTE:
- Before you troubleshoot, record all freeze data and any on-board snapshot with the HDS, and review General Troubleshooting Information (see page 14-4).
- This code is indicated when PCM updating is incomplete.
- Do not turn the ignition switch to LOCK (0) or ACCESSORY (I) while updating the PCM. If you turn the ignition switch to LOCK (0) or ACCESSORY (I) before completion, the PCM can be damaged.

1. Update the PCM (see page 11-215).

2. Check for Temporary DTCs or DTCs with the HDS.

   Is DTC P16C0 indicated?

   YES—Replace the PCM (see page 11-216). ■

   NO—PCM updating is complete. ■

DTC P1717: Open in Transmission Range Switch ATPRVS Switch Circuit

NOTE:
- Before you troubleshoot, record all freeze data and any on-board snapshot with the HDS, and review General Troubleshooting Information (see page 14-4).
- This code is caused by an electrical circuit problem and cannot be caused by a mechanical problem in the transmission.

1. Turn the ignition switch to ON (II).

2. Shift to R, and check the A/T R Switch in the Data List with the HDS.

   Is the A/T R Switch ON?

   YES—Go to step 3.

   NO—Check for proper transmission range switch installation (see page 14-280), adjust the shift cable (see page 14-272), then recheck. ■

3. Check the Reverse Switch (ATPRVS) in the Data List with the HDS.

   Is the Reverse Switch (ATPRVS) ON?

   YES—Intermittent failure, the system is OK at this time. ■

   NO—Go to step 4.

4. Turn the ignition switch to LOCK (0).

5. Disconnect the transmission range switch connector.

6. Check for continuity between transmission range switch connector terminal No. 10 and body ground.

TRANSMISSION RANGE SWITCH CONNECTOR

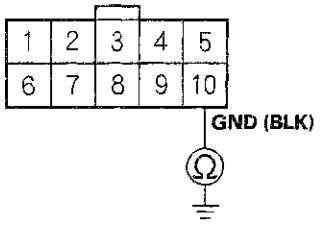

Wire side of female terminals

Is there continuity?

YES—Go to step 7.

NO—Repair open in the wire between transmission range switch connector terminal No. 10 and body ground (G101) (see page 22-22), or repair poor ground (G101), then go to step 10.

7. Turn the ignition switch to ON (II).

8. Measure the voltage between transmission range switch connector terminals No. 1 and No. 10.

TRANSMISSION RANGE SWITCH CONNECTOR

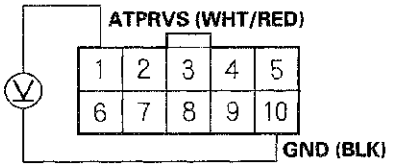

Wire side of female terminals

Is there battery voltage?

YES—Go to step 9.

NO—Repair open in the wire between PCM connector terminal B23 and the transmission range switch, then go to step 10.

(cont'd)

DTC Troubleshooting (cont'd)

9. Check for continuity between transmission range switch connector terminals No. 1 and No. 10 when the shift lever is in R, and when the shift lever is shifted to any position other than R.

TRANSMISSION RANGE SWITCH CONNECTOR

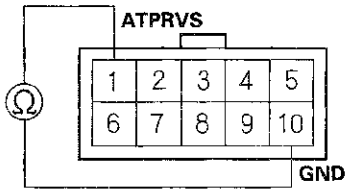

Terminal side of male terminals

Is there continuity when the shift lever is in R, and no continuity when the shift lever is shifted to any position other than R?

YES—Go to step 16.

NO—Replace the transmission range switch (see page 14-280), then go to step 10.

10. Reconnect all connectors.

11. Turn the ignition switch to ON (II).

12. Clear the DTC with the HDS.

13. Start the engine with the shift lever in P. Shift to N from P, then shift to R, and wait for at least 2 seconds.

14. Check for Temporary DTCs or DTCs with the HDS.

Is DTC P1717 indicated?

YES—Check for poor connections or loose terminals between the transmission range switch and the PCM, then go to step 1.

NO—Go to step 15.

15. Monitor the OBD STATUS for P1717 in the DTCs MENU with the HDS.

Does the HDS indicate PASSED?

YES—Troubleshooting is complete. If any other Temporary DTCs or DTCs were indicated in step 14, go to the indicated DTC's troubleshooting. ■

NO—If the HDS indicates FAILED, check for poor connections or loose terminals between the transmission range switch and the PCM, then go to step 1. If the HDS indicates NOT COMPLETED, go to step 13.

16. Reconnect all connectors.

17. Update the PCM if it does not have the latest software (see page 11-215), or substitute a known-good PCM (see page 14-8).

18. Start the engine with the shift lever in P. Shift to N from P, then shift to R, and wait for at least 2 seconds.

19. Check for Temporary DTCs or DTCs with the HDS.

Is DTC P1717 indicated?

YES—Check for poor connections or loose terminals between the transmission range switch and the PCM. If the PCM was updated, substitute a known-good PCM (see page 14-8), then go to step 18. If the PCM was substituted, go to step 1.

NO—Go to step 20.

20. Monitor the OBD STATUS for P1717 in the DTCs MENU with the HDS.

Does the HDS indicate PASSED?

YES—If the PCM was updated, troubleshooting is complete. If the PCM was substituted, replace the original PCM (see page 11-216). If any other Temporary DTCs or DTCs were indicated in step 19, go to the indicated DTC's troubleshooting. ■

NO—If the HDS indicates FAILED, check for poor connections or loose terminals between the transmission range switch and the PCM. If the PCM was updated, substitute a known-good PCM (see page 14-8), then go to step 18. If the PCM was substituted, go to step 1. If the HDS indicates NOT COMPLETED, go to step 18.

DTC P1730: Problem in Shift Control System:

- Shift Solenoid Valves A or D Stuck OFF
- Shift Solenoid Valve B Stuck ON
- Shift Valves A, B, or D Stuck

NOTE: Before you troubleshoot, record all freeze data and any on-board snapshot with the HDS, and review the General Troubleshooting Information (see page 14-4).

1. Warm up the engine to normal operating temperature (the radiator fan comes on).

2. Make sure that the transmission is filled to the proper level, and check for fluid leaks.

3. Drain the ATF (see step 3 on page 14-231) through a strainer. Inspect the strainer for metal debris or excessive clutch material.

   Does the strainer have metal debris or excessive clutch material?

   YES—Replace the transmission, then go to step 16.

   NO—Replace the ATF (see page 14-231), then go to step 4.

4. Turn the ignition switch to ON (II).

5. Clear the DTC with the HDS.

6. Test-drive the vehicle with the shift lever in D, and let the transmission shift through all five gears.

7. Monitor the OBD STATUS for P1730 in the DTCs MENU with the HDS.

   Does the HDS indicate FAILED?

   YES—Go to step 8.

   NO—If the HDS indicates PASSED, intermittent failure, the system is OK at this time. If the HDS indicates NOT COMPLETED, go to step 6.

(cont'd)

DTC Troubleshooting (cont'd)

8. Clear the DTC with the HDS.

9. Select Shift Solenoid Valve A in the Miscellaneous Test Menu, and check that shift solenoid valve A operates with the HDS.

   Is a clicking sound heard?

   YES—Go to step 10.

   NO—Replace shift solenoid valve A (see page 14-216), then go to step 14.

10. Select Shift Solenoid Valve B in the Miscellaneous Test Menu, and check that shift solenoid valve B operates with the HDS.

    Is a clicking sound heard?

    YES—Go to step 11.

    NO—Replace shift solenoid valve B (see page 14-216), then go to step 14.

11. Select Shift Solenoid Valve D in the Miscellaneous Test Menu, and check that shift solenoid valve D operates with the HDS.

    Is a clicking sound heard?

    YES—Go to step 12.

    NO—Replace shift solenoid valve D (see page 14-216), then go to step 14.

12. Test-drive the vehicle with the shift lever in D, and let the transmission shift through all five gears.

13. Monitor the OBD STATUS for P1730 in the DTCs MENU with the HDS.

    Does the HDS indicate FAILED?

    YES—Repair the hydraulic system related to shift valves A, B, and D, or replace the transmission, then go to step 16.

    NO—If the HDS indicates PASSED, intermittent failure, the system is OK at this time. If the HDS indicates NOT COMPLETED, go to step 12.

14. Turn the ignition switch to ON (II).

15. Clear the DTC with the HDS.

16. Test-drive the vehicle with the shift lever in D, and let the transmission shift through all five gears.

17. Check for Temporary DTCs or DTCs with the HDS.

    Is DTC P1730 indicated?

    YES—Go to step 8.

    NO—Go to step 18.

18. Monitor the OBD STATUS for P1730 in the DTCs MENU with the HDS.

    Does the HDS indicate PASSED?

    YES—Troubleshooting is complete. If any other Temporary DTCs or DTCs were indicated in step 17, go to the indicated DTC's troubleshooting. ■

    NO—If the HDS indicates FAILED, go to step 8. If the HDS indicates NOT COMPLETED, go to step 16.

DTC P1731: Problem in Shift Control System:

- Shift Solenoid Valve E Stuck ON
- Shift Valve E Stuck
- A/T Clutch Pressure Control Solenoid Valve A Stuck OFF

NOTE: Before you troubleshoot, record all freeze data and any on-board snapshot with the HDS, and review General Troubleshooting Information (see page 14-4).

1. Warm up the engine to normal operating temperature (the radiator fan comes on).

2. Make sure that the transmission is filled to the proper level, and check for fluid leaks.

3. Drain the ATF (see step 3 on page 14-231) through a strainer. Inspect the strainer for metal debris or excessive clutch material.

   Does the strainer have metal debris or excessive clutch material?

   YES—Replace the transmission, then go to step 14.

   NO—Replace the ATF (see page 14-231), then go to step 4.

4. Turn the ignition switch to ON (II).

5. Clear the DTC with the HDS.

6. Test-drive the vehicle with the shift lever in D, and let the transmission shift through all five gears.

7. Monitor the OBD STATUS for P1731 in the DTCs MENU with the HDS.

   Does the HDS indicate FAILED?

   YES—Go to step 8.

   NO—If the HDS indicates PASSED, intermittent failure, the system is OK at this time. If the HDS indicates NOT COMPLETED, go to step 6.

8. Clear the DTC with the HDS.

9. Select Shift Solenoid Valve E in the Miscellaneous Test Menu, and check that shift solenoid valve E operates with the HDS.

   Is a clicking sound heard?

   YES—Go to step 10.

   NO—Replace shift solenoid valve E (see page 14-216), then go to step 12.

10. Select Clutch Pressure Control (Linear) Solenoid Valve A in the Miscellaneous Test Menu, and test A/T clutch pressure control solenoid valve A with the HDS.

    Does the HDS indicate NORMAL?

    YES—Intermittent failure, the system is OK at this time. ■

    NO—Follow the instructions indicated on the HDS according to the test result, if the HDS has not determined the cause of the failure, go to step 11. If any part was replaced, go to step 12.

11. Inspect A/T clutch pressure control solenoid valve A (see page 14-218).

    Does A/T clutch pressure control solenoid valve A work properly?

    YES—Repair the hydraulic system related to shift valve E, or replace the transmission, then go to step 14.

    NO—Replace A/T clutch pressure control solenoid valve A (see page 14-220), then go to step 12.

(cont'd)

DTC Troubleshooting (cont'd)

12. Turn the ignition switch to ON (II).

13. Clear the DTC with the HDS.

14. Test-drive the vehicle with the shift lever in D, and let the transmission shift through all five gears.

15. Check for Temporary DTCs or DTCs with the HDS.

    Is DTC P1731 indicated?

    YES—Go to step 8.

    NO—Go to step 16.

16. Monitor the OBD STATUS for P1731 in the DTCs MENU with the HDS.

    Does the HDS indicate PASSED?

    YES—Troubleshooting is complete. If any other Temporary DTCs or DTCs were indicated in step 15, go to the indicated DTC's troubleshooting. ■

    NO—If the HDS indicates FAILED, go to step 8. If the HDS indicates NOT COMPLETED, go to step 14.

DTC P1732: Problem in Shift Control System:

- Shift Solenoid Valves B or C Stuck ON
- Shift Valves B or C Stuck

NOTE: Before you troubleshoot, record all freeze data and any on-board snapshot with the HDS, and review General Troubleshooting Information (see page 14-4).

1. Warm up the engine to normal operating temperature (the radiator fan comes on).

2. Make sure that the transmission is filled to the proper level, and check for fluid leaks.

3. Drain the ATF (see step 3 on page 14-231) through a strainer. Inspect the strainer for metal debris or excessive clutch material.

   Does the strainer have metal debris or excessive clutch material?

   YES—Replace the transmission, then go to step 15.

   NO—Replace the ATF (see page 14-231), then go to step 4.

4. Turn the ignition switch to ON (II).

5. Clear the DTC with the HDS.

6. Test-drive the vehicle with the shift lever in D, and let the transmission shift through all five gears.

7. Monitor the OBD STATUS for P1732 in the DTCs MENU with the HDS.

   Does the HDS indicate FAILED?

   YES—Go to step 8.

   NO—If the HDS indicates PASSED, intermittent failure, the system is OK at this time. If the HDS indicates NOT COMPLETED, go to step 6.

8. Clear the DTC with the HDS.

9. Select Shift Solenoid Valve B in the Miscellaneous Test Menu, and check that shift solenoid valve B operates with the HDS.

   Is a clicking sound heard?

   YES—Go to step 10.

   NO—Replace shift solenoid valve B (see page 14-216), then go to step 13.

10. Select Shift Solenoid Valve C in the Miscellaneous Test Menu, and check that shift solenoid valve C operates with the HDS.

    Is a clicking sound heard?

    YES—Go to step 11.

    NO—Replace shift solenoid valve C (see page 14-216), then go to step 13.

11. Test-drive the vehicle with the shift lever in D, and let the transmission shift through all five gears.

12. Monitor the OBD STATUS for P1732 in the DTCs MENU with the HDS.

    Does the HDS indicate FAILED?

    YES—Repair the hydraulic system related to shift valves B and C, or replace the transmission, then go to step 15.

    NO—If the HDS indicates PASSED, intermittent failure, the system is OK at this time. If the HDS indicates NOT COMPLETED, go to step 11.

13. Turn the ignition switch to ON (II).

14. Clear the DTC with the HDS.

15. Test-drive the vehicle with the shift lever in D, and let the transmission shift through all five gears.

16. Check for Temporary DTCs or DTCs with the HDS.

    Is DTC P1732 indicated?

    YES—Go to step 8.

    NO—Go to step 17.

17. Monitor the OBD STATUS for P1732 in the DTCs MENU with the HDS.

    Does the HDS indicate PASSED?

    YES—Troubleshooting is complete. If any other Temporary DTCs or DTCs were indicated in step 16, go to the indicated DTC's troubleshooting. ■

    NO—If the HDS indicates FAILED, go to step 8. If the HDS indicates NOT COMPLETED, go to step 15.

DTC Troubleshooting (cont'd)

DTC P1733: Problem in Shift Control System:

- Shift Solenoid Valve D Stuck ON
- Shift Valve D Stuck
- A/T Clutch Pressure Control Solenoid Valve C Stuck OFF

NOTE: Before you troubleshoot, record all freeze data and any on-board snapshot with the HDS, and review General Troubleshooting Information (see page 14-4).

1. Warm up the engine to normal operating temperature (the radiator fan comes on).

2. Make sure that the transmission is filled to the proper level, and check for fluid leaks.

3. Drain the ATF (see step 3 on page 14-231) through a strainer. Inspect the strainer for metal debris or excessive clutch material.

   Does the strainer have metal debris or excessive clutch material?

   YES—Replace the transmission, then go to step 14.

   NO—Replace the ATF (see page 14-231), then go to step 4.

4. Turn the ignition switch to ON (II).

5. Clear the DTC with the HDS.

6. Test-drive the vehicle with the shift lever in D, and let the transmission shift through all five gears.

7. Monitor the OBD STATUS for P1733 in the DTCs MENU with the HDS.

   Does the HDS indicate FAILED?

   YES—Go to step 8.

   NO—If the HDS indicates PASSED, intermittent failure, the system is OK at this time. If the HDS indicates NOT COMPLETED, go to step 6.

8. Clear the DTC with the HDS.

9. Select Shift Solenoid Valve D in the Miscellaneous Test Menu, and check that shift solenoid valve D operates with the HDS.

   Is a clicking sound heard?

   YES—Go to step 10.

   NO—Replace shift solenoid valve D (see page 14-216), then go to step 12.

10. Select Clutch Pressure Control (Linear) Solenoid Valve C in the Miscellaneous Test Menu, and test A/T clutch pressure control solenoid valve C with the HDS.

    Does the HDS indicate NORMAL?

    YES—Go to step 11.

    NO—Follow the instructions indicated on the HDS according to the test result, if the HDS has not determined the cause of the failure, go to step 11. If any part was replaced, go to step 12.

11. Inspect A/T clutch pressure control solenoid valve C (see page 14-223).

    Does A/T clutch pressure control solenoid valve C work properly?

    YES—Repair the hydraulic system related to shift valve D, or replace the transmission, then go to step 14.

    NO—Replace A/T clutch pressure control solenoid C (see page 14-225), then go to step 12.

12. Turn the ignition switch to ON (II).

13. Clear the DTC with the HDS.

14. Test-drive the vehicle with the shift lever in D, and let the transmission shift through all five gears.

15. Check for Temporary DTCs or DTCs with the HDS.

    Is DTC P1733 indicated?

    YES—Go to step 8.

    NO—Go to step 16.

16. Monitor the OBD STATUS for P1733 in the DTCs MENU with the HDS.

    Does the HDS indicate PASSED?

    YES—Troubleshooting is complete. If any other Temporary DTCs or DTCs were indicated in step 15, go to the indicated DTC's troubleshooting. ■

    NO—If the HDS indicates FAILED, go to step 8. If the HDS indicates NOT COMPLETED, go to step 14.

DTC P1734: Problem in Shift Control System:

- Shift Solenoid Valves B or C Stuck OFF
- Shift Valves B or C Stuck

NOTE: Before you troubleshoot, record all freeze data and any on-board snapshot with the HDS, and review General Troubleshooting Information (see page 14-4).

1. Warm up the engine to normal operating temperature (the radiator fan comes on).

2. Make sure that the transmission is filled to the proper level, and check for fluid leaks.

3. Drain the ATF (see step 3 on page 14-231) through a strainer. Inspect the strainer for metal debris or excessive clutch material.

   Does the strainer have metal debris or excessive clutch material?

   YES—Replace the transmission, then go to step 15.

   NO—Replace the ATF (see page 14-231), then go to step 4.

4. Turn the ignition switch to ON (II).

5. Clear the DTC with the HDS.

6. Test-drive the vehicle with the shift lever in D, and let the transmission shift through all five gears.

7. Monitor the OBD STATUS for P1734 in the DTCs MENU with the HDS.

   Does the HDS indicate FAILED?

   YES—Go to step 8.

   NO—If the HDS indicates PASSED, intermittent failure, the system is OK at this time. If the HDS indicates NOT COMPLETED, go to step 6.

(cont'd)

DTC Troubleshooting (cont'd)

8. Clear the DTC with the HDS.

9. Select Shift Solenoid Valve B in the Miscellaneous Test Menu, and check that shift solenoid valve B operates with the HDS.

   Is a clicking sound heard?

   YES—Go to step 10.

   NO—Replace shift solenoid valve B (see page 14-216), then go to step 13.

10. Select Shift Solenoid Valve C in the Miscellaneous Test Menu, and check that shift solenoid valve C operates with the HDS.

    Is a clicking sound heard?

    YES—Go to step 11.

    NO—Replace shift solenoid valve C (see page 14-216), then go to step 13.

11. Test-drive the vehicle with the shift lever in D, and let the transmission shift through all five gears.

12. Monitor the OBD STATUS for P1734 in the DTCs MENU with the HDS.

    Does the HDS indicate FAILED?

    YES—Repair the hydraulic system related to shift valves B and C, or replace the transmission, then go to step 15.

    NO—If the HDS indicates PASSED, intermittent failure, the system is OK at this time. If the HDS indicates NOT COMPLETED, go to step 11.

13. Turn the ignition switch to ON (II).

14. Clear the DTC with the HDS.

15. Test-drive the vehicle with the shift lever in D, and let the transmission shift through all five gears.

16. Check for Temporary DTCs or DTCs with the HDS.

    Is DTC P1734 indicated?

    YES—Go to step 8.

    NO—Go to step 17.

17. Monitor the OBD STATUS for P1734 in the DTCs MENU with the HDS.

    Does the HDS indicate PASSED?

    YES—Troubleshooting is complete. If any other Temporary DTCs or DTCs were indicated in step 16, go to the indicated DTC's troubleshooting. ■

    NO—If the HDS indicates FAILED, go to step 8. If the HDS indicates NOT COMPLETED, go to step 15.

DTC U0029: F-CAN Malfunction (F-CAN BUS-OFF (PCM))

NOTE: Before you troubleshoot, record all freeze data and any on-board snapshot with the HDS, and review General Troubleshooting Information (see page 14-4).

1. Turn the ignition switch to ON (II).

2. Clear the DTC with the HDS.

3. Check for Temporary DTCs or DTCs in the PGM-FI SYSTEM with the HDS.

   Is DTC U0029 indicated in the PGM-FI SYSTEM?

   YES—Go to the DTC U0029 troubleshooting in the PGM-FI SYSTEM (see page 11-177). ■

   NO—Go to step 4.

4. Check for Temporary DTCs or DTCs in the A/T SYSTEM with the HDS.

   Is DTC U0029 indicated in the A/T SYSTEM?

   YES—Go to step 5.

   NO—Intermittent failure, the system is OK at this time. If any other Temporary DTCs or DTCs were indicated, go to the indicated DTC's troubleshooting. ■

5. Update the PCM if it does not have the latest software (see page 11-215), or substitute a known-good PCM (see page 14-8).

6. Start the engine, and wait for at least 2 minutes.

7. Check for Temporary DTCs or DTCs in the A/T SYSTEM with the HDS.

   Is DTC U0029 indicated in the A/T SYSTEM?

   YES—Check for poor connections or loose terminals at the PCM. If the PCM was updated, substitute a known-good PCM (see page 14-8), then go to step 6. If the PCM was substituted, go to step 1.

   NO—Go to step 8.

8. Monitor the OBD STATUS for U0029 in the DTCs MENU with the HDS.

   Does the HDS indicate PASSED?

   YES—If the PCM was updated, troubleshooting is complete. If the PCM was substituted, replace the original PCM (see page 11-216). If any other Temporary DTCs or DTCs were indicated in step 7, go to the indicated DTC's troubleshooting. ■

   NO—If the HDS indicates FAILED, check for poor connections or loose terminals at the PCM. If the PCM was updated, substitute a known-good PCM (see page 14-8), then go to step 6. If the PCM was substituted, go to step 1. If the HDS indicates NOT COMPLETED, go to step 6.

DTC Troubleshooting (cont'd)

DTC U0122: F-CAN Malfunction (PCM-VSA Modulator-Control Unit)

NOTE: Before you troubleshoot, record all freeze data and any on-board snapshot with the HDS, and review General Troubleshooting Information (see page 14-4).

1. Turn the ignition switch to ON (II).
2. Clear the DTC with the HDS.
3. Check for Temporary DTCs or DTCs in the PGM-FI SYSTEM with the HDS.

   Is DTC U0122 indicated in the PGM-FI SYSTEM?

   YES—Go to the DTC U0122 troubleshooting in the PGM-FI SYSTEM (see page 11-177).■

   NO—Go to step 4.
4. Check for Temporary DTCs or DTCs in the A/T SYSTEM with the HDS.

   Is DTC U0122 indicated in the A/T SYSTEM?

   YES—Go to step 5.

   NO—Intermittent failure, the system is OK at this time. If any other Temporary DTCs or DTCs were indicated, go to the indicated DTC's troubleshooting.■
5. Update the PCM if it does not have the latest software (see page 11-215), or substitute a known-good PCM (see page 14-8).
6. Start the engine, and wait for at least 2 minutes.
7. Check for Temporary DTCs or DTCs in the A/T SYSTEM with the HDS.

   Is DTC U0122 indicated in the A/T SYSTEM?

   YES—Check for poor connections or loose terminals between the VSA modulator-control unit and the PCM. If the PCM was updated, substitute a known-good PCM (see page 14-8), then go to step 6. If the PCM was substituted, go to step 1.

   NO—Go to step 8.
8. Monitor the OBD STATUS for U0122 in the DTCs MENU with the HDS.

   Does the HDS indicate PASSED?

   YES—If the PCM was updated, troubleshooting is complete. If the PCM was substituted, replace the original PCM (see page 11-216). If any other Temporary DTCs or DTCs were indicated in step 7, go to the indicated DTC's troubleshooting.■

   NO—If the HDS indicates FAILED, check for poor connections or loose terminals between the VSA modulator-control unit and the PCM. If the PCM was updated, substitute a known-good PCM (see page 14-8), then go to step 6. If the PCM was substituted, go to step 1. If the HDS indicates NOT COMPLETED, go to step 6.

DTC U0155: F-CAN Malfunction (PCM-Gauge Control Module)

NOTE: Before you troubleshoot, record all freeze data and any on-board snapshot with the HDS, and review General Troubleshooting Information (see page 14-4).

1. Turn the ignition switch to ON (II).

2. Clear the DTC with the HDS.

3. Check for Temporary DTCs or DTCs in the PGM-FI SYSTEM with the HDS.

   Is DTC U0155 indicated in the PGM-FI SYSTEM?

   YES—Go to the DTC U0155 troubleshooting in the PGM-FI SYSTEM (see page 11-179).■

   NO—Go to step 4.

4. Check for Temporary DTCs or DTCs in the A/T SYSTEM with the HDS.

   Is DTC U0155 indicated in the A/T SYSTEM?

   YES—Go to step 5.

   NO—Intermittent failure, the system is OK at this time. If any other Temporary DTCs or DTCs were indicated, go to the indicated DTC's troubleshooting.■

5. Update the PCM if it does not have the latest software (see page 11-215), or substitute a known-good PCM (see page 14-8).

6. Start the engine, and wait for at least 2 minutes.

7. Check for Temporary DTCs or DTCs in the A/T SYSTEM with the HDS.

   Is DTC U0155 indicated in the A/T SYSTEM?

   YES—Check for poor connections or loose terminals between the gauge control module and the PCM. If the PCM was updated, substitute a known-good PCM (see page 14-8), then go to step 6. If the PCM was substituted, go to step 1.

   NO—Go to step 8.

8. Monitor the OBD STATUS for U0155 in the DTCs MENU with the HDS.

   Does the HDS indicate PASSED?

   YES—If the PCM was updated, troubleshooting is complete. If the PCM was substituted, replace the original PCM (see page 11-216). If any other Temporary DTCs or DTCs were indicated in step 7, go to the indicated DTC's troubleshooting.■

   NO—If the HDS indicates FAILED, check for poor connections or loose terminals between the gauge control module and the PCM. If the PCM was updated, substitute a known-good PCM (see page 14-8), then go to step 6. If the PCM was substituted, go to step 1. If the HDS indicates NOT COMPLETED, go to step 6.

Road Test

1. Start the engine, and warm it up to normal operating temperature (the radiator fan comes on).

2. Apply the parking brake, and block both rear wheels. Start the engine, then shift to D while pressing the brake pedal. Press the accelerator pedal, and release it suddenly. The engine should not stall.

3. Repeat step 2 in all shift lever positions.

4. Connect the HDS to the DLC (A) located under the driver's side of the dashboard.

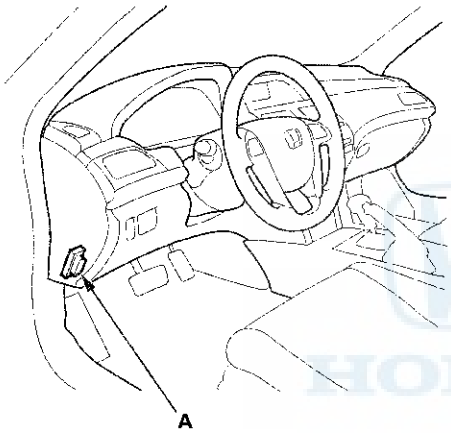

5. Turn the ignition switch to ON (II), and go to the A/T Data List. Make sure the HDS communicates with the PCM. If it does not, go to the DLC circuit troubleshooting (see page 11-192).

6. Prepare the HDS to take a HIGH SPEED SNAPSHOT (refer to the HDS user's guide for more details if needed):

   - Select the High Speed icon.
   - Select these parameters:
     - Vehicle Speed
     - Output Shaft (Countershaft) Speed (rpm)
     - Input Shaft (Mainshaft) Speed (rpm)
     - Engine Speed
     - Relative TP Sensor
     - APP Sensor A (V)
     - ATF Temp Sensor (V)
     - Battery Voltage
     - Shift Control
     - Brake Switch
   - Set the Trigger Type to Parameter.
   - Adjust the Parameter setting to APP Sensor A above 1.2 V.
   - Set the recording time to 60 seconds.
   - Set the trigger point to —30 seconds.

7. Find a suitable level road. When you are ready to begin the test, press OK on the HDS.

8. Monitor the HDS and accelerate quickly until the APP Sensor A reads 1.3 V. Maintain a steady throttle until the transmission shifts to 5th gear, then slow the vehicle and come to a stop.

9. Save the snapshot if the entire event was recorded or increase the recording time setting as necessary and repeat step 8.

10. Adjust the parameter setting to 2.4 V. Test-drive the vehicle again. While monitoring the HDS, accelerate quickly until the APP Sensor A reads 2.5 V. Maintain a steady throttle until the transmission shifts to 5th gear (or reasonable speed), then slow the vehicle and come to a stop.

11. Save the snapshot if the entire event was recorded or increase the recording time setting as necessary and repeat step 10.

12. Accelerate quickly until the accelerator pedal is to the floor. Maintain a steady pedal until the transmission shifts to 3rd gear, then slow to a stop, and save the snapshot.

13. Review each snapshot individually, and compare the Shift Control, the APP Sensor A voltage, and the Vehicle Speed to following the table.

Upshift: D position (K24Z2 Engine Model)

APP Sensor A voltage: 1.3 V	
1st → 2nd	9—11 mph (14—18 km/h)
2nd → 3rd	17—21 mph (27—33 km/h)
3rd → 4th	25—30 mph (41—49 km/h)
4th → 5th	39—45 mph (62—72 km/h)
Lock-up ON	30—35 mph (48—56 km/h)
APP Sensor A voltage: 2.5 V	
1st → 2nd	19—23 mph (31—37 km/h)
2nd → 3rd	38—44 mph (61—71 km/h)
3rd → 4th	55—63 mph (89—101 km/h)
4th → 5th	109—119 mph (176—192 km/h)
Lock-up ON	116—126 mph (186—202 km/h)
Fully-opened throttle APP Sensor A voltage: 4.5 V	
1st → 2nd	37—43 mph (59—69 km/h)
2nd → 3rd	67—73 mph (106—118 km/h)
3rd → 4th	102—112 mph (164—180 km/h)

Upshift: D position (K24Z3 Engine Model)

APP Sensor A voltage: 1.3 V	
1st → 2nd	9—11 mph (14—18 km/h)
2nd → 3rd	17—21 mph (27—33 km/h)
3rd → 4th	25—30 mph (41—49 km/h)
4th → 5th	39—45 mph (62—72 km/h)
Lock-up ON	30—35 mph (48—56 km/h)
APP Sensor A voltage: 2.5 V	
1st → 2nd	21—25 mph (34—40 km/h)
2nd → 3rd	40—45 mph (64—72 km/h)
3rd → 4th	65—72 mph (104—116 km/h)
4th → 5th	114—124 mph (184—200 km/h)
Lock-up ON	119—130 mph (192—210 km/h)
Fully-opened throttle APP Sensor A voltage: 4.5 V	
1st → 2nd	39—45 mph (62—72 km/h)
2nd → 3rd	65—72 mph (104—116 km/h)
3rd → 4th	102—112 mph (164—180 km/h)

Downshift: D position (K24Z2 Engine Model)

APP Sensor A voltage: 1.3 V	
Lock-up OFF	29—34 mph (47—55 km/h)
5th → 4th	29—35 mph (47—57 km/h)
4th → 3rd	18—22 mph (29—35 km/h)
3rd → 1st	4—8 mph (7—13 km/h)
APP Sensor A voltage: 2.5 V	
Lock-up OFF	71—80 mph (115—129 km/h)
Fully-opened throttle APP Sensor A voltage: 4.5 V	
5th → 4th	113—123 mph (182—198 km/h)
4th → 3rd	86—94 mph (138—152 km/h)
3rd → 2nd	51—58 mph (82—94 km/h)
2nd → 1st	25—31 mph (40—50 km/h)

Downshift: D position (K24Z3 Engine Model)

APP Sensor A voltage: 1.3 V	
Lock-up OFF	29—34 mph (47—55 km/h)
5th → 4th	29—35 mph (47—57 km/h)
4th → 3rd	18—22 mph (29—35 km/h)
3rd → 1st	4—8 mph (7—13 km/h)
APP Sensor A voltage: 2.5 V	
Lock-up OFF	84—93 mph (135—149 km/h)
Fully-opened throttle APP Sensor A voltage: 4.5 V	
5th → 4th	113—123 mph (182—198 km/h)
4th → 3rd	83—91 mph (133—147 km/h)
3rd → 2nd	51—58 mph (82—94 km/h)
2nd → 1st	25—31 mph (40—50 km/h)

14. Drive the vehicle in 4th or 5th gear with the shift lever in D, then shift into 2nd gear. The vehicle should immediately begin to slow down from the engine braking, then slow to a stop.

15. Shift to R, accelerate from a stop at full throttle momentarily, and check for abnormal noise and clutch slippage.

16. Park the vehicle on an upward slope (about 16-degrees), apply the brake, and shift into P. Release the brake; the vehicle should not move.

    NOTE: Always use the parking brake to hold the vehicle when stopped on an incline in gear. Depending on the grade of the incline, the vehicle could roll backwards if the brake is released.

Stall Speed Test

1. Make sure the transmission fluid is filled to the proper level (see page 14-230).

2. Apply the parking brake, and block all four wheels.

3. Connect the HDS to the DLC (A) located under the driver's side of the dashboard.

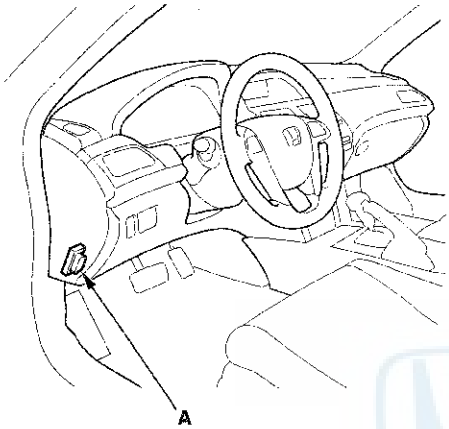

4. Turn the ignition switch to ON (II), and go to the A/T Data List. Make sure the HDS communicates with the PCM. If it does not, go to the DLC circuit troubleshooting (see page 11-192).

5. Make sure the A/C switch is OFF.

6. Start the engine, and warm it up to normal operating temperature (the radiator fan comes on).

7. Shift to 2 while pressing the brake pedal firmly, then press the accelerator pedal for 6 to 8 seconds, and note the engine speed. Do not move the shift lever or take your foot off of the brake pedal, while raising the engine speed.

8. Allow 2 minutes for cooling, then repeat the test with the shift lever in D, 1, and R.

   NOTE:
   - Do not test stall speed for more than 10 seconds at a time.
   - Stall speed tests should be used for diagnostic purposes only.
   - Stall speed test results should be the same in D, 2, 1, and R.
   - Do not test stall speed with the A/T oil pressure gauges installed.

   Stall Speed rpm
   Specification: 2,100 rpm
   Service Limit: 1,950—2,250 rpm

9. If the stall speeds are out of the service limit, problems and probable causes are listed in the table.

Problem	Probable Causes
Stall speed rpm high in D, 2, 1, and R	• ATF pump output low • Clogged ATF strainer • Regulator valve stuck • Slipping clutch
Stall speed rpm high in 1	Slippage of 1st clutch
Stall speed rpm high in 2	Slippage of 2nd clutch
Stall speed rpm high in R	Slippage 4th clutch
Stall speed rpm low in D, 2, 1, and R	• Engine output low • Engine throttle valve closed • Torque converter one-way clutch slipping

Pressure Test

Special Tools Required
- A/T oil pressure gauge set 07406-0020400 or 07406-0020401
- A/T pressure hose, 2,210 mm 07MAJ-PY4011A
- A/T pressure hose adapter 07MAJ-PY40120

NOTE:
- Disable the VSA (if equipped) by pressing the VSA OFF switch.
- VSA DTC(s) may come on during the test-drive. If the VSA DTC(s) come on, clear the DTC(s) with the HDS.

1. Make sure the transmission fluid is filled to the proper level (see page 14-230).
2. Raise the vehicle on a lift, or apply the parking brake, block the rear wheels, and raise the front of the vehicle. Make sure it is securely supported.
3. Allow the front wheels to rotate freely.
4. Remove the splash shield.
5. Connect the HDS to the DLC (A) located under the driver's side of the dashboard.

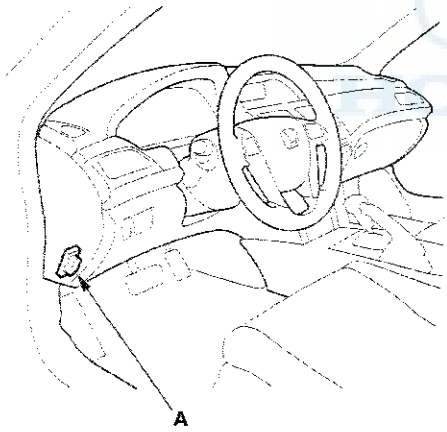

6. Turn the ignition switch to ON (II), and go to the A/T Data List. Make sure the HDS communicates with the PCM. If it does not, go to the DLC circuit troubleshooting (see page 11-192).
7. Connect the A/T oil pressure gauge to the line pressure inspection port (A). Do not allow dust or other foreign particles to enter the port while connecting the gauge.

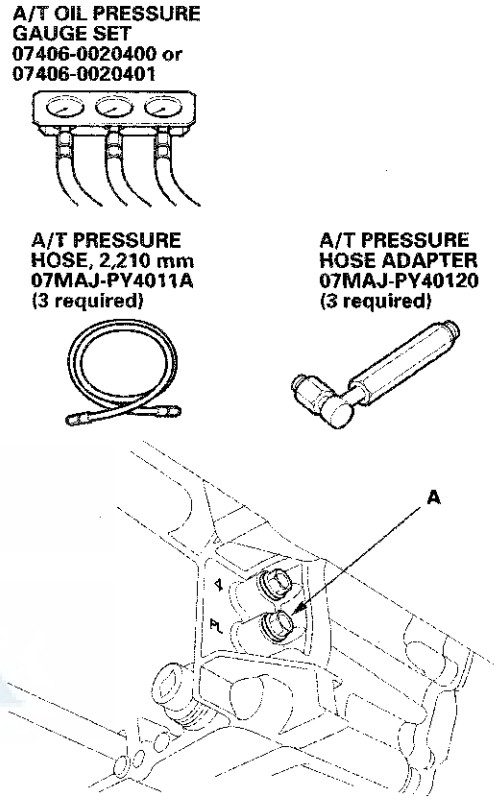

8. Start the engine, and warm it up to normal operating temperature (the radiator fan comes on).
9. Hold the engine speed at 2,000 rpm with the shift lever in P or N.
10. Measure the line pressure at the line pressure inspection port (A).

    NOTE: Higher pressure may be indicated if measurements are made in shift lever positions other than P or N.

Pressure	Fluid Pressure	
	Standard	Service Limit
Line (A)	927–985 kPa (9.45–10.05 kgf/cm², 134–143 psi)	877 kPa (8.95 kgf/cm², 127 psi)

(cont'd)

Pressure Test (cont'd)

11. Turn the engine off, then disconnect the A/T oil pressure gauge from the line pressure inspection port.

12. Install the sealing bolt in the line pressure inspection port with a new sealing washer, and tighten the sealing bolt to 18 N·m (1.8 kgf·m, 13 lbf·ft). Do not reuse the old sealing washer.

13. Connect the A/T oil pressure gauge to the 1st clutch pressure inspection port (B).

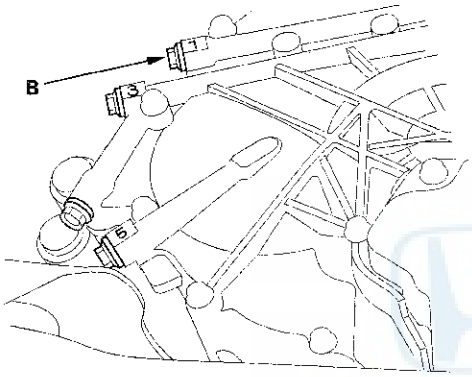

14. Remove the intake air duct and the air cleaner assembly, and connect the A/T oil pressure gauge to the 2nd clutch pressure inspection port (C). Then temporarily install the air cleaner assembly and the intake air duct.

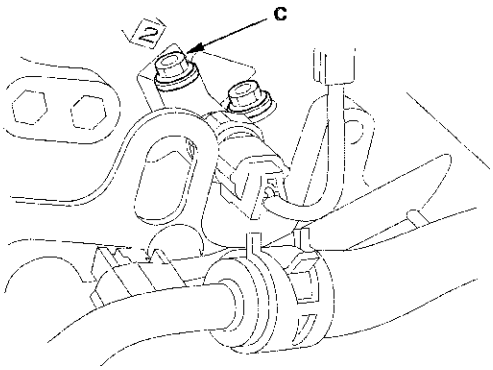

15. Start the engine, and shift into D.

16. Shift to 1st gear, and measure the 1st clutch pressure at the 1st clutch pressure inspection port (B) while holding engine speed at 2,000 rpm.

17. Shift up to 2nd gear, and measure the 2nd clutch pressure at the 2nd clutch pressure inspection port (C) while holding engine speed at 2,000 rpm.

Pressure	Fluid Pressure	
	Standard	Service Limit
1st clutch (B) 2nd clutch (C)	917–995 kPa (9.35–10.15 kgf/cm², 133–144 psi)	867 kPa (8.85 kgf/cm², 126 psi)

18. Turn the engine off, then disconnect the A/T oil pressure gauges from the 1st clutch pressure and the 2nd clutch pressure inspection ports.

19. Install the sealing bolts in the 1st clutch pressure and the 2nd clutch pressure inspection ports with new sealing washers, and tighten the sealing bolts to 18 N·m (1.8 kgf·m, 13 lbf·ft). Do not reuse the old sealing washers.

20. Connect the A/T oil pressure gauge to the 3rd clutch pressure inspection port (D) and the 5th clutch pressure inspection port (F).

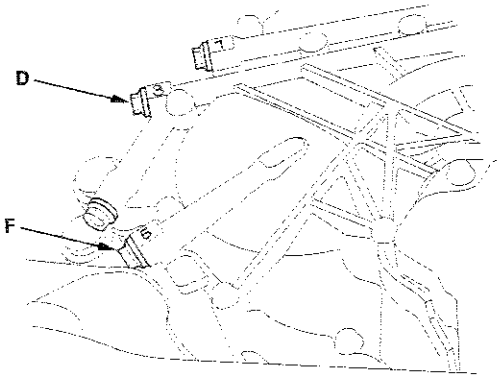

21. Connect the A/T oil pressure gauge to the 4th clutch pressure inspection port (E).

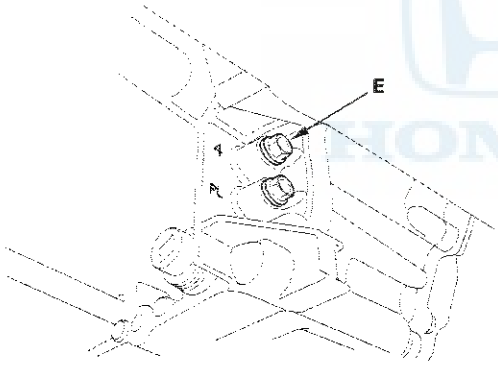

22. Start the engine with the shift lever in P, while pressing the brake pedal.

23. Shift to D, and release the brake pedal; the transmission is in 1st gear.

24. Press the accelerator pedal to increase the engine speed to 2,500 rpm, then shift to 2nd gear.

25. Release the accelerator pedal slowly to close the throttle over 5 seconds; the engine speed decreases to 1,000 rpm with the transmission in 2nd gear.

26. Press the accelerator pedal very slowly to increase the engine speed to 2,000 rpm over 5 seconds, and hold the accelerator. Shift to 3rd gear, and measure the 3rd clutch pressure at the 3rd clutch pressure inspection port (D) while holding engine speed at 2,000 rpm.

27. Shift to 4th gear, and measure the 4th clutch pressure at the 4th clutch pressure inspection port (E).

28. Shift to 5th gear, and measure 5th clutch pressure at the 5th clutch pressure inspection port (F) while holding engine speed at 2,000 rpm.

Pressure	Fluid Pressure	
	Standard	Service Limit
3rd clutch (D) 4th clutch (E) 5th clutch (F)	917–995 kPa (9.35–10.15 kgf/cm², 133–144 psi)	867 kPa (8.85 kgf/cm², 126 psi)

29. Bring the engine back to an idle, then apply the brake pedal to stop the wheels from rotating.

30. Shift to R, then release the brake pedal. Raise the engine speed to 2,000 rpm, and measure 4th clutch pressure at the 4th clutch pressure inspection port (E).

Pressure	Fluid Pressure	
	Standard	Service Limit
4th clutch (E) in R	917–995 kPa (9.35–10.15 kgf/cm², 133–144 psi)	867 kPa (8.85 kgf/cm², 126 psi)

31. Turn the engine off, then disconnect the A/T oil pressure gauges from the 3rd, 4th, and 5th clutch pressure inspection ports.

32. Install the sealing bolts in the 3rd, 4th, and 5th clutch pressure inspection ports with new sealing washers, and tighten the sealing bolts to 18 N·m (1.8 kgf·m, 13 lbf·ft). Do not reuse the old sealing washers.

(cont'd)

Pressure Test (cont'd)

33. If the pressures are out of the service limit, problems and probable causes are listed in the table.

Problem	Probable causes
No or low line pressure	• Torque converter • ATF pump • Regulator valve • Torque converter check valve • Clogged ATF strainer
No or low 1st clutch pressure	• 1st clutch • O-rings
No or low 2nd clutch pressure	• 2nd clutch • O-rings
No or low 3rd clutch pressure	• 3rd clutch • O-rings
No or low 4th clutch pressure	• 4th clutch • O-rings
No or low 5th clutch pressure	• 5th clutch • O-rings
No or low 4th clutch pressure in R	• Servo valve • 4th clutch • O-rings

34. Install the air cleaner assembly and the intake air duct.

35. Install the splash shield.

36. Check the ATF level (see page 14-230).

Shift Solenoid Valve Test

1. Connect the HDS to the DLC (A) located under the driver's side of the dashboard.

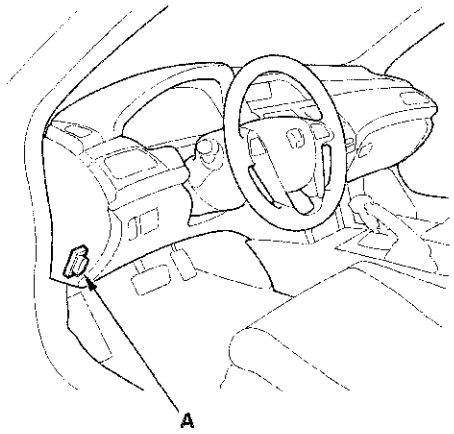

2. Turn the ignition switch to ON (II). Make sure the HDS communicates with the PCM. If it does not, go to the DLC circuit troubleshooting (see page 11-192).

3. Select Shift Solenoid Valves A, B, C, D, and E in the Miscellaneous Test Menu on the HDS.

4. Check that shift solenoid valves A, B, C, D, and E operate with the HDS. A clicking sound should be heard.

   - If a clicking sound is heard, the valves are OK. The test is complete, disconnect the HDS.
   - If no clicking sound is heard, go to step 5.

5. Raise the vehicle on a lift, or apply the parking brake, block the rear wheels, and raise the front of the vehicle. Make sure it is securely supported.

6. Remove the splash shield.

7. Disconnect the shift solenoid wire harness connector.

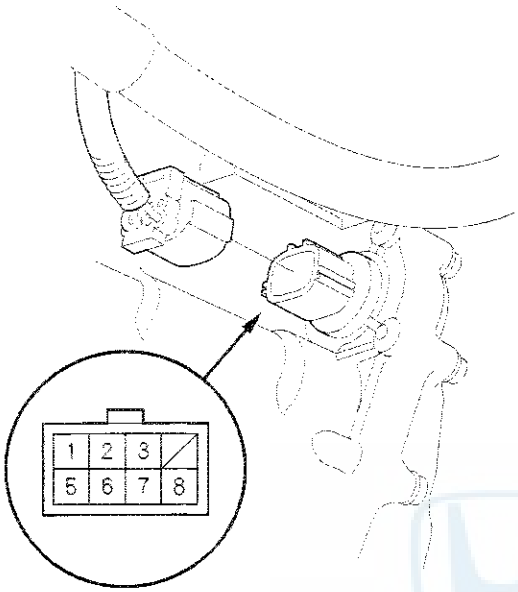

Terminal side of male terminals

8. Measure the resistance between each of the following terminals and body ground:

   - No. 1 terminal: Shift solenoid valve C
   - No. 2 terminal: Shift solenoid valve B
   - No. 3 terminal: Shift solenoid valve E
   - No. 5 terminal: Shift solenoid valve A
   - No. 8 terminal: Shift solenoid valve D

   Standard: 12—25 Ω

   - If the resistance is within the standard, go to step 9.
   - If the resistance is out of standard, go to step 10.

9. Connect a jumper wire from the battery positive terminal to each shift solenoid wire harness connector terminal individually. A clicking sound should be heard.

   - If a clicking sound is heard, the valves are OK. The test is complete, reconnect the connector.
   - If no clicking sound is heard, go to step 10.

10. Remove the drain plug (A), and drain the automatic transmission fluid (ATF).

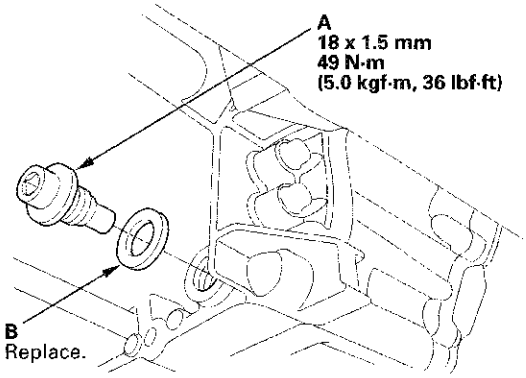

11. Reinstall the drain plug with a new sealing washer (B).

12. Remove the left front wheel.

13. Remove the shift solenoid valve cover (A), the dowel pins (B), and the gasket (C).

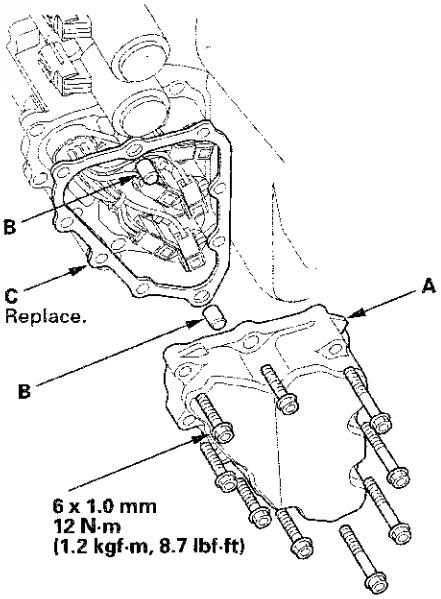

(cont'd)

Shift Solenoid Valve Test (cont'd)

14. Disconnect the shift solenoid valve connectors.

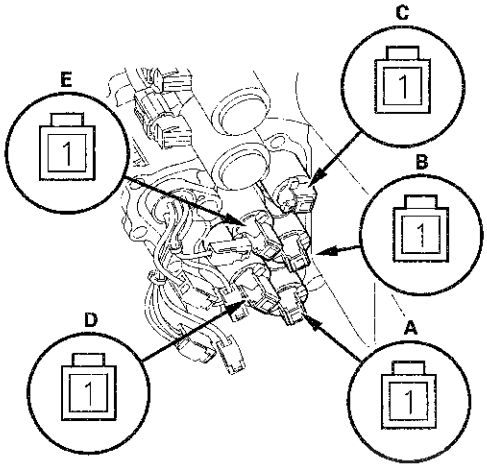

15. Measure the resistance of each shift solenoid valve between the connector terminals and body ground:

    Standard: 12—25 Ω

    - If the resistance is within the standard, go to step 16.
    - If the resistance is out of standard, go to step 18.

16. Connect a jumper wire from the positive battery terminal to each shift solenoid valve terminal individually.

    - If a clicking sound is heard, go to step 17.
    - If no clicking sound is heard, go to step 18.

17. Disconnect the shift solenoid wire harness connector (A), and remove the bolt securing the shift solenoid wire harness (B). Install a new O-ring (C) on a new shift solenoid wire harness, and install the shift solenoid wire harness in the transmission housing. Then go to step 23.

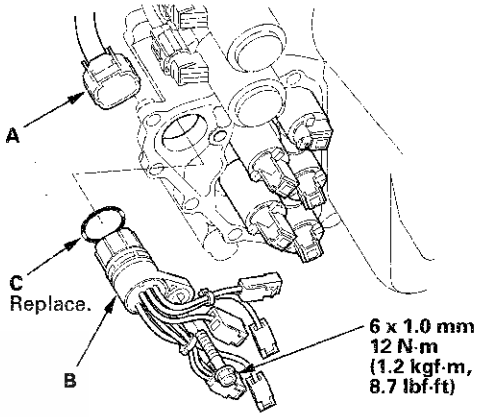

18. Remove the mounting bolts (F), then hold the shift solenoid valve body, and remove the shift solenoid valves. Do not hold the connector to remove the shift solenoid valves.

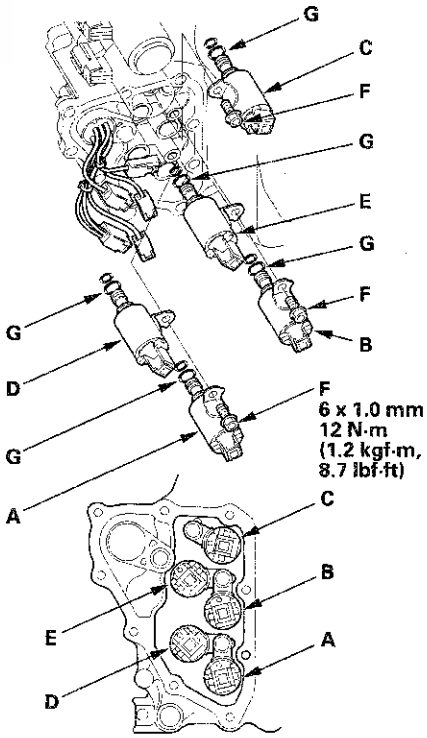

19. Install new O-rings (two O-rings per shift solenoid valve) (G) on the shift solenoid valves.

    NOTE: A new shift solenoid valve comes with new O-rings. If you install a new shift solenoid valve, use the O-rings provided with it.

20. Install shift solenoid valve C (brown connector), shift solenoid valve D (black connector), and shift solenoid valve E (black connector) by holding the shift solenoid valve body; make sure the mounting bracket contacts the servo body.

    NOTE: Do not hold the shift solenoid valve connector to install the shift solenoid valve. Be sure to hold the shift solenoid valve body.

21. Install shift solenoid valve A (brown connector) by holding the shift solenoid valve body; make sure the mounting bracket contacts the bracket of shift solenoid valve D.

    NOTE: Do not install shift solenoid valve A before installing shift solenoid valve D. If shift solenoid valve A is installed before installing shift solenoid valve D, it may damage the hydraulic control system.

22. Install shift solenoid valve B (brown connector) by holding the shift solenoid valve body; make sure the mounting bracket contacts the bracket of shift solenoid valve E.

    NOTE: Do not install shift solenoid valve B before installing shift solenoid valve E. If shift solenoid valve B is installed before installing shift solenoid valve E, it may damage the hydraulic control system.

23. Connect the shift solenoid valve connectors:

    - RED wire connector to shift solenoid valve E.
    - GRN wire connector to shift solenoid valve C.
    - ORN wire connector to shift solenoid valve B.
    - BLU wire connector to shift solenoid valve A.
    - YEL, WHT, and WHT wire connector to shift solenoid valve D.

24. Install a new gasket, the dowel pins, and the shift solenoid valve cover.

25. Refill the transmission with ATF (see step 4 on page 14-231).

26. Install the splash shield.

27. Install the left front wheel.

Shift Solenoid Valve and Shift Solenoid Wire Harness Replacement

1. Raise the vehicle on a lift, or apply the parking brake, block the rear wheels, and raise the front of the vehicle. Make sure it is securely supported.
2. Remove the left front wheel.
3. Remove the splash shield.
4. Remove the drain plug (A), and drain the automatic transmission fluid (ATF).

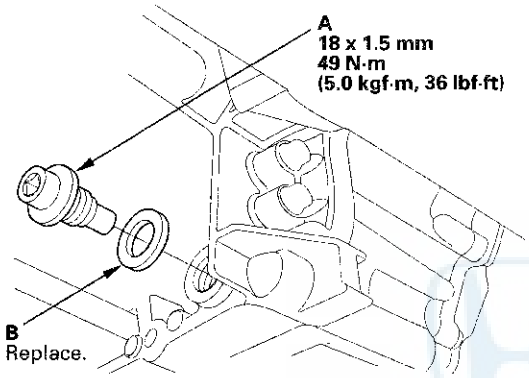

5. Reinstall the drain plug with a new sealing washer (B).
6. Remove the shift solenoid valve cover (A), the dowel pins (B), and the gasket (C).

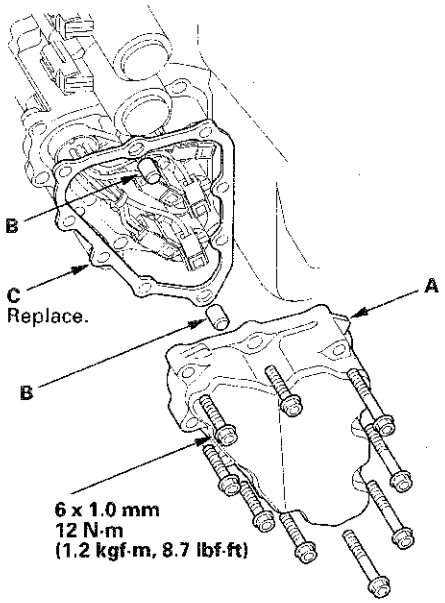

7. Disconnect the shift solenoid valve connectors.
   - If replacing shift solenoid valve(s), go to step 8.
   - If replacing the shift solenoid wire harness (A), remove the shift solenoid wire harness. Install a new O-ring (B) on the shift solenoid wire harness connector, and install it in the transmission housing, then go to step 13.

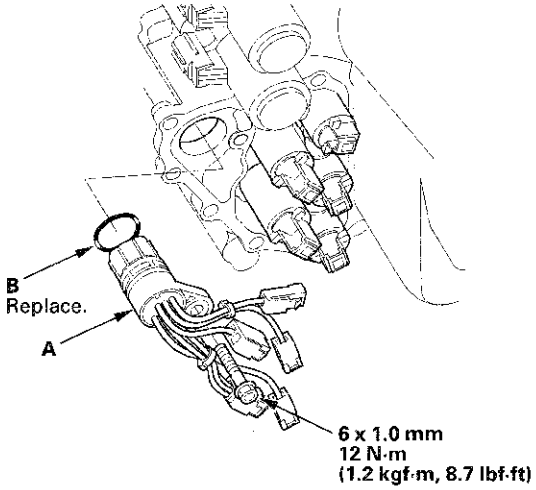

8. Remove the mounting bolts (F), then hold the shift solenoid valve body, and remove the shift solenoid valves. Do not hold the connector to remove the shift solenoid valve.

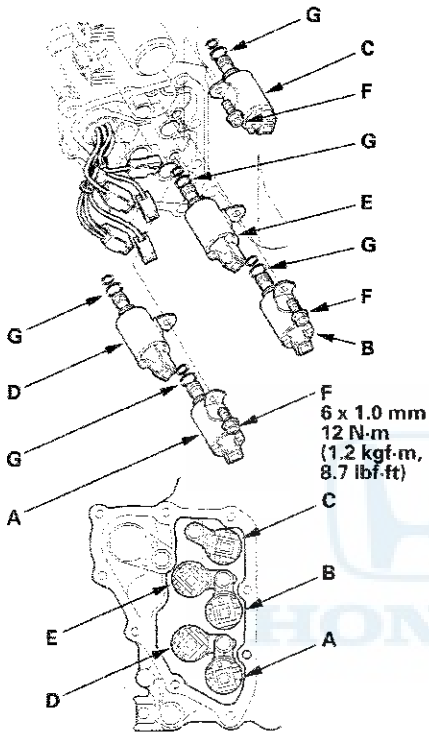

9. Install new O-rings (two O-rings per shift solenoid valve) (G) on the shift solenoid valve.

   NOTE: A new shift solenoid valve comes with new O-rings. If you install a new shift solenoid valve, use the O-rings provided with it.

10. Install shift solenoid valve C (brown connector), shift solenoid valve D (black connector), and shift solenoid valve E (black connector) by holding the shift solenoid valve body; make sure the mounting bracket contacts the servo body.

    NOTE: Do not hold the shift solenoid valve connector to install the shift solenoid valve. Be sure to hold the shift solenoid valve body.

11. Install shift solenoid valve B (brown connector) by holding the solenoid valve body; make sure the mounting bracket contacts the bracket of shift solenoid valve E.

    NOTE: Do not install shift solenoid valve B before installing shift solenoid valve E. If shift solenoid valve B is installed before installing shift solenoid valve E, it may damage the hydraulic control system.

12. Install shift solenoid valve A (brown connector) by holding the shift solenoid valve body; make sure the mounting bracket contacts the bracket of shift solenoid valve D.

    NOTE: Do not install shift solenoid valves A before installing shift solenoid valves D. If shift solenoid valve A is installed before installing shift solenoid valve D, it may damage the hydraulic control system.

13. Connect the shift solenoid valve connectors:

    - RED wire connector to shift solenoid valve E.
    - GRN wire connector to shift solenoid valve C.
    - ORN wire connector to shift solenoid valve B.
    - BLU wire connector to shift solenoid valve A.
    - YEL, WHT, and WHT wire connector to shift solenoid valve D.

14. Install a new gasket, the dowel pins, and the shift solenoid valve cover.

15. Check the connector for rust, dirt, or oil, clean or repair as needed, then connect the connector securely.

16. Refill the transmission with ATF (see step 4 on page 14-231).

17. Install the splash shield.

18. Install the left front wheel.

A/T Clutch Pressure Control Solenoid Valve A Test

1. Connect the HDS to the DLC (A) located under the driver's side of the dashboard.

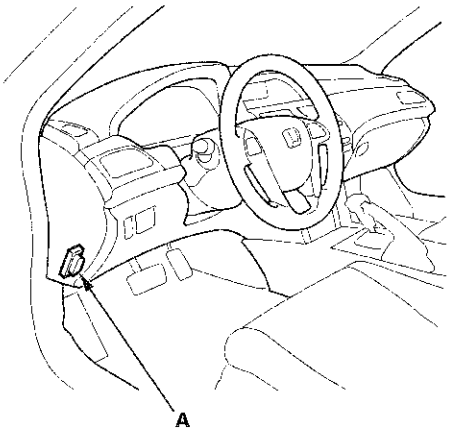

2. Turn the ignition switch to ON (II). Make sure the HDS communicates with the PCM. If it does not, go to the DLC circuit troubleshooting (see page 11-192).

3. Select Clutch Pressure Control (Linear) Solenoid Valve A in the Miscellaneous Test Menu on the HDS.

4. Test A/T clutch pressure control solenoid valve A with the HDS.

   - If the valve tests OK, the test is complete. Disconnect the HDS.
   - If the valve does not test OK, follow the instructions on the HDS.
   - If the valve does not test OK, and the HDS does not determine the cause, go to step 5.

5. Remove the intake air duct.

6. Disconnect the A/T clutch pressure control solenoid valve A connector.

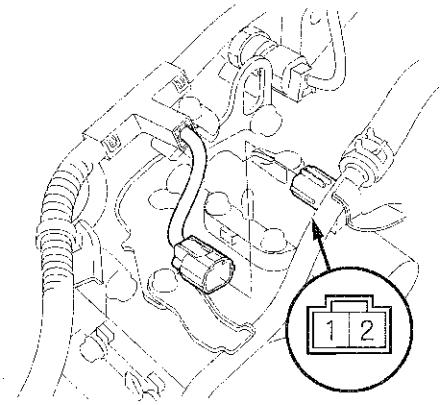

7. Measure the resistance between A/T clutch pressure control solenoid valve A connector terminals No. 1 and No. 2.

   Standard: 3—10 Ω

   - If the resistance is within the standard, go to step 8.
   - If the resistance is out of standard, replace A/T clutch pressure control solenoid valve A (see page 14-220).

8. Connect a jumper wire from the negative battery terminal to A/T clutch pressure control solenoid valve A connector terminal No. 2, and connect another jumper wire from the positive battery terminal to A/T clutch pressure control solenoid valve A connector terminal No. 1.

   - If a clicking sound is heard, the valve is OK, and the test is complete, go to step 18.
   - If no clicking sound is heard, go to step 9.

9. Remove the bolts securing the ATF cooler inlet line brackets (B), then remove A/T clutch pressure control solenoid valve A.

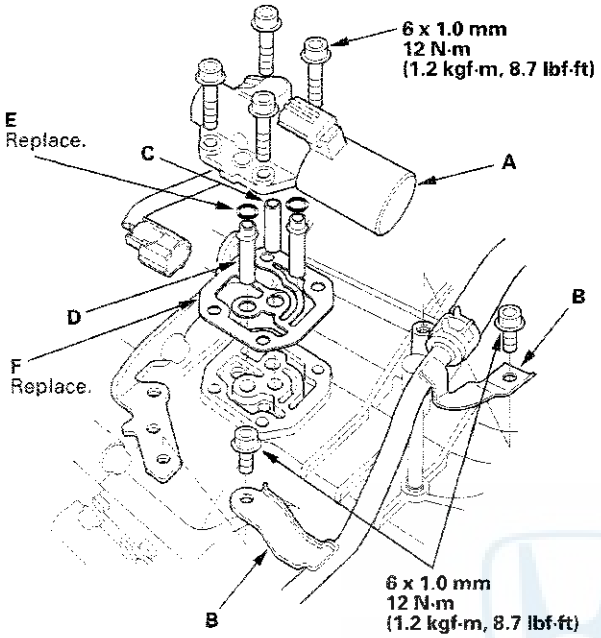

10. Remove the ATF pipe (C), the ATF joint pipes (D), the O-rings (E), and the gasket (F).

11. Check the fluid passage of A/T clutch pressure control solenoid valve A for contamination.

12. Connect a jumper wire from the negative battery terminal to A/T clutch pressure control solenoid valve A connector terminal No. 2, and connect another jumper wire from the positive battery terminal to A/T clutch pressure control solenoid valve A connector terminal No. 1. Make sure A/T clutch pressure control solenoid valve A moves.

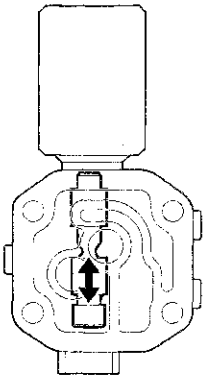

13. Disconnect one of the jumper wires, and check the valve movement at the fluid passage in the valve body mounting surface. If the valve binds or moves sluggishly, or if the solenoid valve does not operate, replace A/T clutch pressure control solenoid valve A.

14. Clean the mounting surface and the fluid passage of the A/T clutch pressure control solenoid valve body and the transmission housing.

15. Install a new gasket on the transmission housing, and install the ATF pipe and the ATF joint pipes. Install new O-rings over the ATF joint pipes.

    NOTE: Be sure to install a new gasket with the blue side toward the transmission housing.

16. Install A/T clutch pressure control solenoid valve A.

17. Secure the ATF cooler inlet line brackets with the bolts.

18. Check the connector for rust, dirt, or oil, clean or repair if necessary. Then connect the connector securely.

19. Install the intake air duct.

A/T Clutch Pressure Control Solenoid Valve A Replacement

1. Remove the intake air duct.

2. Disconnect the A/T clutch pressure control solenoid valve A connector.

3. Remove the bolts securing the ATF cooler inlet line brackets (B).

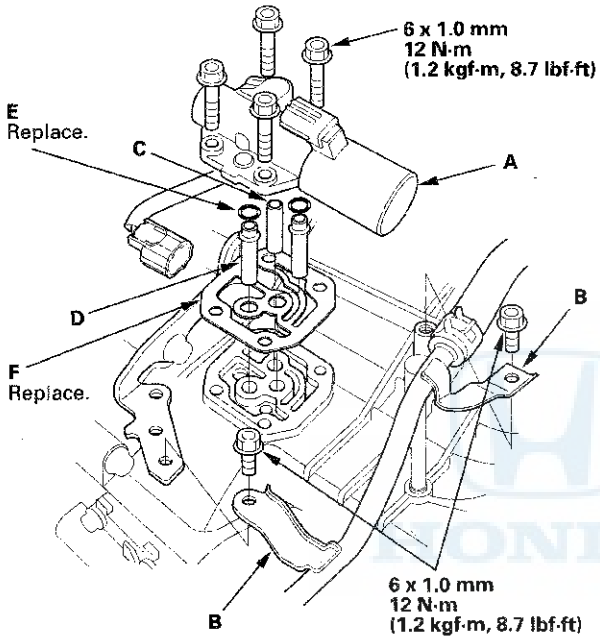

4. Remove A/T clutch pressure control solenoid valve A.

5. Remove the ATF pipe (C), the ATF joint pipes (D), the O-rings (E), and the gasket (F).

6. Clean the mounting surface and the fluid passages of the transmission housing.

7. Install a new gasket on the transmission housing, and install the ATF pipe and the ATF joint pipes.

   NOTE: Be sure to install a new gasket with the blue side toward the transmission housing.

8. Install new O-rings over the ATF joint pipes.

9. Install a new A/T clutch pressure control solenoid valve A.

10. Secure the ATF cooler inlet line brackets with the bolts.

11. Check the connector for rust, dirt, or oil, and clean or repair if necessary. Then connect the connector securely.

12. Install the intake air duct.

A/T Clutch Pressure Control Solenoid Valve B Test

1. Connect the HDS to the DLC (A) located under the driver's side of the dashboard.

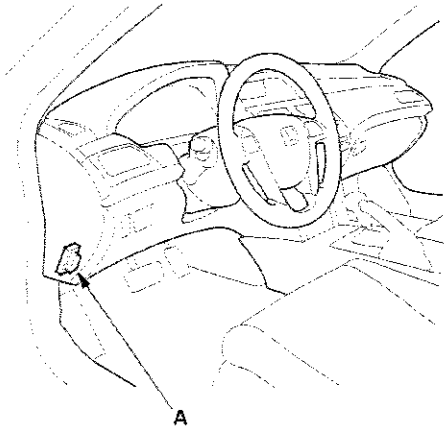

2. Turn the ignition switch to ON (II). Make sure the HDS communicates with the PCM. If it does not, go to the DLC circuit troubleshooting (see page 11-192).

3. Select Clutch Pressure Control (Linear) Solenoid Valve B in the Miscellaneous Test Menu on the HDS.

4. Test A/T clutch pressure control solenoid valve B with the HDS.

   - If the valve tests OK, the test is complete. Disconnect the HDS.
   - If the valve does not test OK, follow the instructions on the HDS.
   - If the valve does not test OK, and the HDS does not determine the cause, go to step 5.

5. Do the battery removal procedure (see page 22-90).

6. Loosen the two bolts located behind the battery base, and remove the two bolts securing the battery base, then remove the battery base.

7. Disconnect the A/T clutch pressure control solenoid valve B connector.

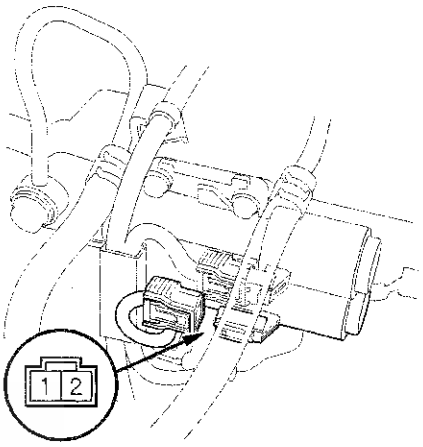

8. Measure the resistance between A/T clutch pressure control solenoid valve B connector terminals No. 1 and No. 2.

   Standard: 3—10 Ω

   - If the resistance is within the standard, go to step 9.
   - If the resistance is out of standard, replace A/T clutch pressure control solenoid valve B (see page 14-225).

9. Connect a jumper wire from the negative battery terminal to A/T clutch pressure control solenoid valve B connector terminal No. 2, and connect another jumper wire from the positive battery terminal to A/T clutch pressure control solenoid valve B connector terminal No. 1.

   - If a clicking sound is heard, the valve is OK, and the test is complete, go to step 18.
   - If no clicking sound is heard, go to step 10.

(cont'd)

A/T Clutch Pressure Control Solenoid Valve B Test (cont'd)

10. Disconnect the A/T clutch pressure control solenoid valve C connector, then remove A/T clutch pressure control solenoid valves B and C.

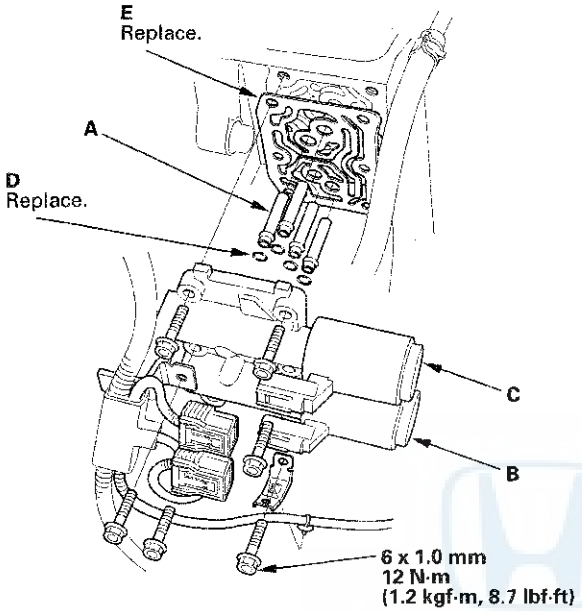

11. Remove the ATF joint pipes (A), the O-rings (D), and the gasket (E).

12. Check the fluid passage of A/T clutch pressure control solenoid valves B and C for contamination.

13. Connect a jumper wire from the negative battery terminal to A/T clutch pressure control solenoid valve B connector terminal No. 2, and connect another jumper wire from the positive battery terminal to connector terminal No. 1. Make sure A/T clutch pressure control solenoid valve B moves.

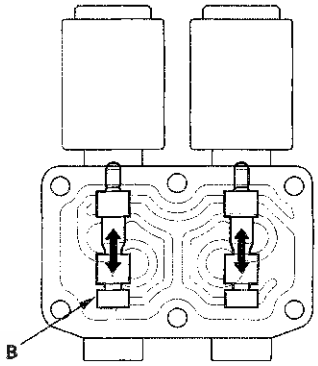

14. Disconnect one of the jumper wires, and check the valve movement at the fluid passage in the valve body mounting surface. If the valve binds or moves sluggishly, or if the solenoid valve does not operate, replace A/T clutch pressure control solenoid valves B and C.

15. Clean the mounting surface and the fluid passage of the solenoid valve body and the transmission housing.

16. Install a new gasket on the transmission housing, and install the ATF joint pipes. Install new O-rings over the ATF joint pipes.

    NOTE: Be sure to install a new gasket with the blue side toward the transmission housing.

17. Install A/T clutch pressure control solenoid valves B and C.

18. Check the connectors for rust, dirt, or oil, clean or repair if necessary. Then connect the connectors securely.

19. Install the battery base.

20. Do the battery installation procedure (see page 22-90).

A/T Clutch Pressure Control Solenoid Valve C Test

1. Connect the HDS to the DLC (A) located under the driver's side of the dashboard.

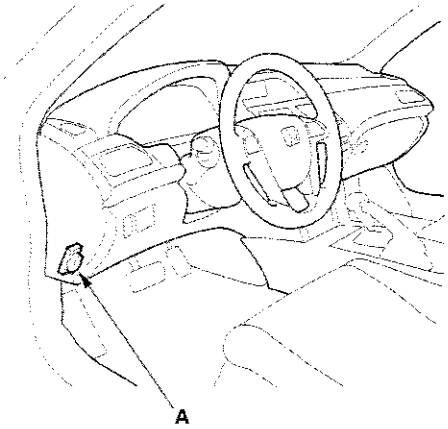

2. Turn the ignition switch to ON (II). Make sure the HDS communicates with the PCM. If it does not, go to the DLC circuit troubleshooting (see page 11-192).

3. Select Clutch Pressure Control (Linear) Solenoid Valve C in the Miscellaneous Test Menu on the HDS.

4. Test A/T clutch pressure control solenoid valve C with the HDS.

   - If the valve tests OK, the test is complete. Disconnect the HDS.
   - If the valve does not test OK, follow the instructions on the HDS.
   - If the valve does not test OK, and the HDS does not determine the cause, go to step 5.

5. Do the battery removal procedure (see page 22-90).

6. Loosen the two bolts located behind the battery base, and remove the two bolts securing the battery base, then remove the battery base.

7. Disconnect the A/T clutch pressure control solenoid valve C connector.

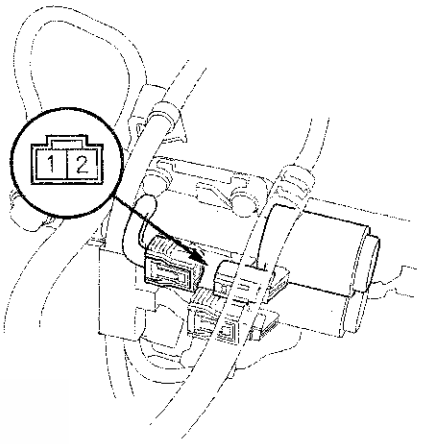

8. Measure the resistance between A/T clutch pressure control solenoid valve C connector terminals No. 1 and No. 2.

   Standard: 3—10 Ω

   - If the resistance is within the standard, go to step 9.
   - If the resistance is out of standard, replace A/T clutch pressure control solenoid valve C (see page 14-225).

9. Connect a jumper wire from the negative battery terminal to A/T clutch pressure control solenoid valve C connector terminal No. 2, and connect another jumper wire from the positive battery terminal to A/T clutch pressure control solenoid valve C connector terminal No. 1.

   - If a clicking sound is heard, the valve is OK, and the test is complete, go to step 18.
   - If no clicking sound is heard, go to step 10.

(cont'd)

A/T Clutch Pressure Control Solenoid Valve C Test (cont'd)

10. Disconnect the A/T clutch pressure control solenoid valve B connector then remove A/T clutch pressure control solenoid valves B and C.

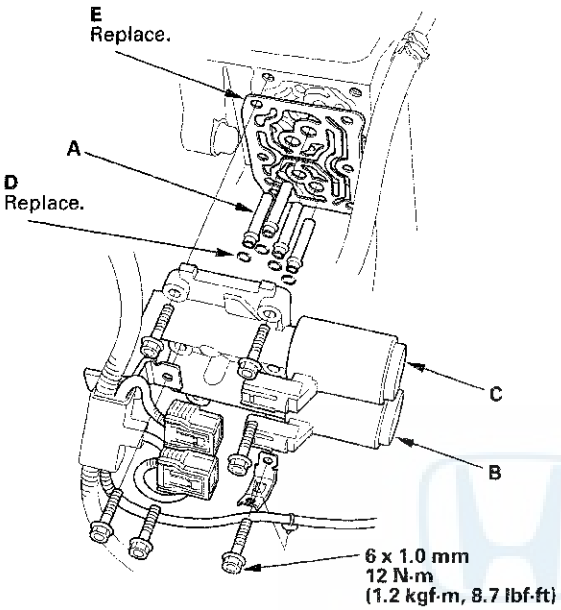

11. Remove the ATF joint pipes (A), the O-rings (D), and the gasket (E).

12. Check the fluid passage of A/T clutch pressure control solenoid valves B and C for contamination.

13. Connect a jumper wire from the negative battery terminal to A/T clutch pressure control solenoid valve C connector terminal No. 2, and connect another jumper wire from the positive battery terminal to connector terminal No. 1. Make sure A/T clutch pressure control solenoid valve C moves.

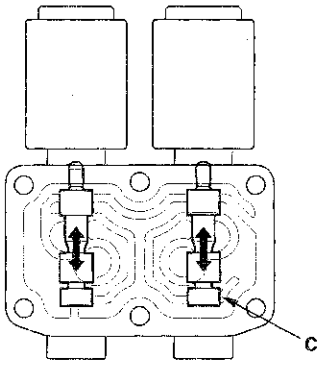

14. Disconnect one of the jumper wires, and check the valve movement at the fluid passage in the valve body mounting surface. If the valve binds or moves sluggishly, or if the solenoid valve does not operate, replace A/T clutch pressure control solenoid valves B and C.

15. Clean the mounting surface and the fluid passage of the solenoid valve body and the transmission housing.

16. Install a new gasket on the transmission housing, and install the ATF joint pipes. Install new O-rings over the ATF joint pipes.

    NOTE: Be sure to install a new gasket with the blue side toward the transmission housing.

17. Install A/T clutch pressure control solenoid valves B and C.

18. Check the connectors for rust, dirt, or oil, clean or repair if necessary. Then connect the connectors securely.

19. Install the battery base.

20. Do the battery installation procedure (see page 22-90).

A/T Clutch Pressure Control Solenoid Valve B and C Replacement

1. Do the battery removal procedure (see page 22-90).

2. Loosen the two bolts located behind the battery base, and remove the two bolts securing the battery base, then remove the battery base.

3. Disconnect the A/T clutch pressure control solenoid valves B and C connectors.

4. Remove A/T clutch pressure control solenoid valves B and C.

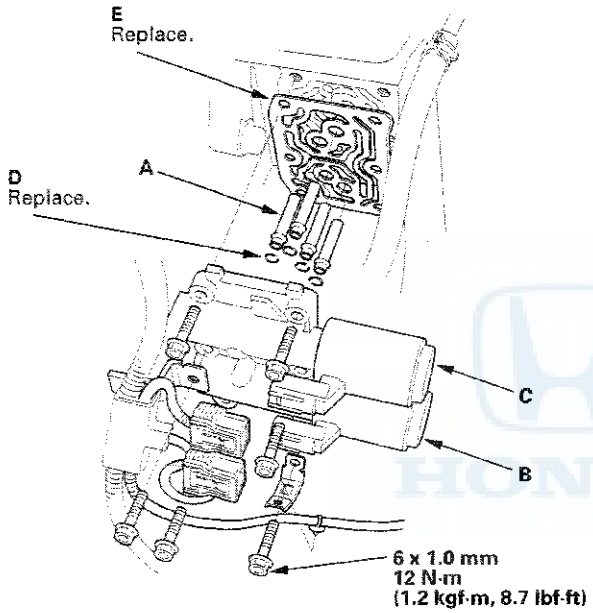

5. Remove the ATF joint pipes (A), the O-rings (D), and the gasket (E).

6. Clean the mounting surface and the fluid passages of the transmission housing.

7. Install a new gasket on the transmission housing, and install the ATF joint pipes.

   NOTE: Be sure to install a new gasket with the blue side toward the transmission housing.

8. Install new O-rings over the ATF joint pipes.

9. Install new A/T clutch pressure control solenoid valves B and C.

10. Check the connectors for rust, dirt, or oil, and clean or repair if necessary. Then connect the connectors securely.

11. Install the battery base.

12. Do the battery installation procedure (see page 22-90).

Input Shaft (Mainshaft) Speed Sensor Replacement

1. Remove the nut securing the under-hood fuse/relay box, and swing it out of the way.
2. Remove the intake air duct and the air cleaner assembly.
3. Disconnect the input shaft (mainshaft) speed sensor connector, and remove the input shaft (mainshaft) speed sensor (A).

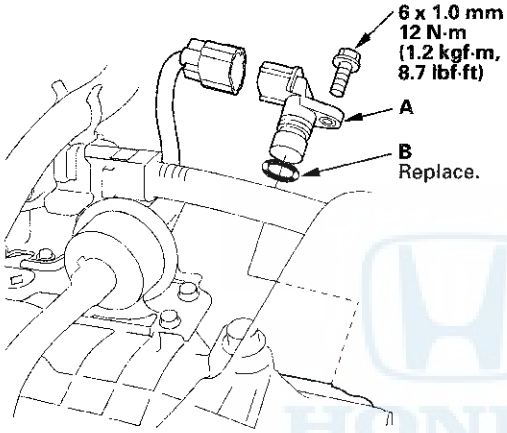

4. Install a new O-ring (B) on a new input shaft (mainshaft) speed sensor, then install the input shaft (mainshaft) speed sensor in the transmission housing.
5. Check the connector for rust, dirt, or oil, and clean or repair if necessary, then connect the connector securely.
6. Install the intake air duct and the air cleaner assembly.
7. Install the under-hood fuse/relay box.

Output Shaft (Countershaft) Speed Sensor Replacement

1. Remove the nut securing the under-hood fuse/relay box, and swing it out of the way.
2. Remove the intake air duct and the air cleaner assembly.
3. Disconnect the output shaft (countershaft) speed sensor connector, and remove the output shaft (countershaft) speed sensor (A).

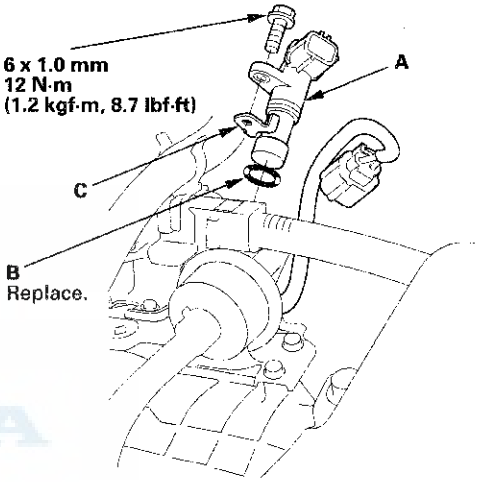

4. Install a new O-ring (B) on a new output shaft (countershaft) speed sensor with the speed sensor washer (C), then install the output shaft (countershaft) speed sensor in the transmission housing.
5. Check the connector for rust, dirt, or oil, and clean or repair if necessary, then connect the connector securely.
6. Install the intake air duct and the air cleaner assembly.
7. Install the under-hood fuse/relay box.

2nd Clutch Transmission Fluid Pressure Switch Replacement

1. Remove the intake air duct.

2. Disconnect the connector (A) from the 2nd clutch transmission fluid pressure switch (B), and remove the 2nd clutch transmission fluid pressure switch.

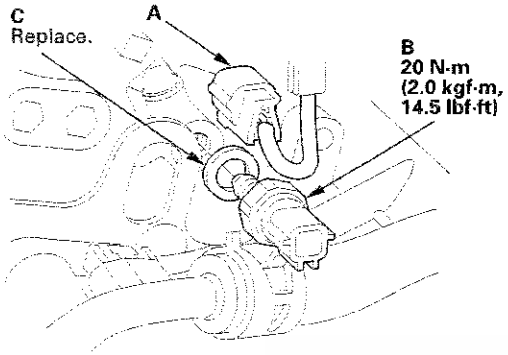

3. Install a new 2nd clutch transmission fluid pressure switch with a new sealing washer (C), and tighten the 2nd clutch transmission fluid pressure switch to the specified torque by turning the metal part, not the plastic part.

4. Check the connector for rust, dirt, or oil, and clean or repair if necessary, then connect the connector securely.

5. Install the intake air duct.

3rd Clutch Transmission Fluid Pressure Switch Replacement

1. Raise the vehicle on a lift, or apply the parking brake, block the rear wheels, and raise the front of the vehicle. Make sure it is securely supported.

2. Remove the splash shield.

3. Disconnect the connector (A) from the 3rd clutch transmission fluid pressure switch (B), then remove the 3rd clutch transmission fluid pressure switch.

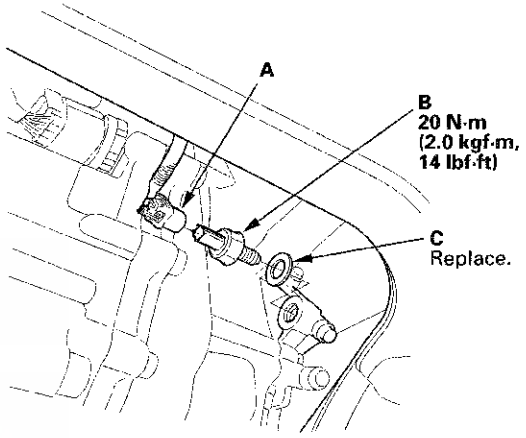

4. Install a new 3rd clutch transmission fluid pressure switch with a new sealing washer (C), and tighten the 3rd clutch transmission fluid pressure switch to the specified torque by turning the metal part, not the plastic part.

5. Check the connector for rust, dirt, or oil, and clean or repair if necessary, then connect the connector securely.

6. Install the splash shield.

ATF Temperature Sensor Test/Replacement

1. Raise the vehicle on a lift, or apply the parking brake, block the rear wheels, and raise the front of the vehicle. Make sure it is securely supported.

2. Remove the left front wheel.

3. Remove the splash shield.

4. Remove the drain plug (A), and drain the automatic transmission fluid (ATF).

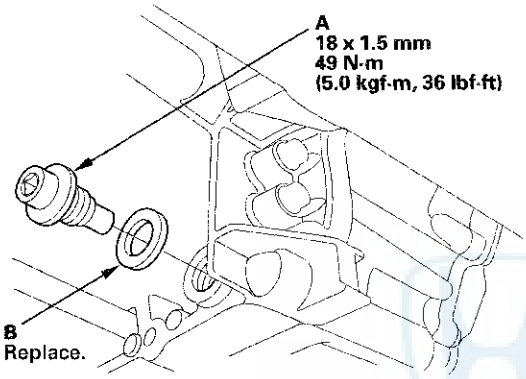

5. Reinstall the drain plug with a new sealing washer (B).

6. Remove the shift solenoid valve cover (A), the dowel pins (B), and the gasket (C).

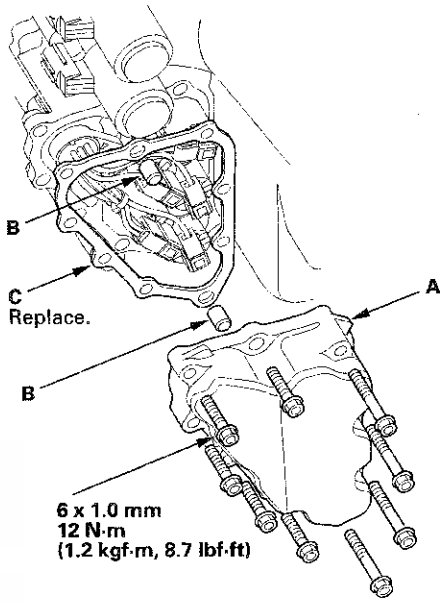

7. Disconnect the shift solenoid wire harness connector, and remove the shift solenoid wire harness from the transmission housing.

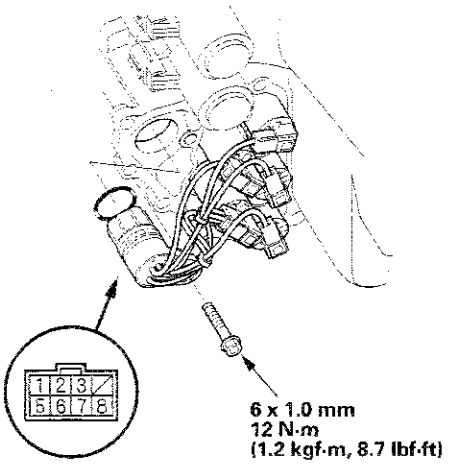

8. Measure the ATF temperature sensor resistance between shift solenoid wire harness connector terminals No. 6 and No. 7.

Standard: 50 Ω —25 kΩ

- If the resistance is within the standard, install the shift solenoid wire harness and a new O-ring, then go to step 11.
- If the resistance is out of the standard, go to step 9.

9. Disconnect the connectors from the shift solenoid valves. Then replace the ATF temperature sensor and the O-ring (F) with new ones.

NOTE: The ATF temperature sensor is not available separately from the shift solenoid wire harness (G).

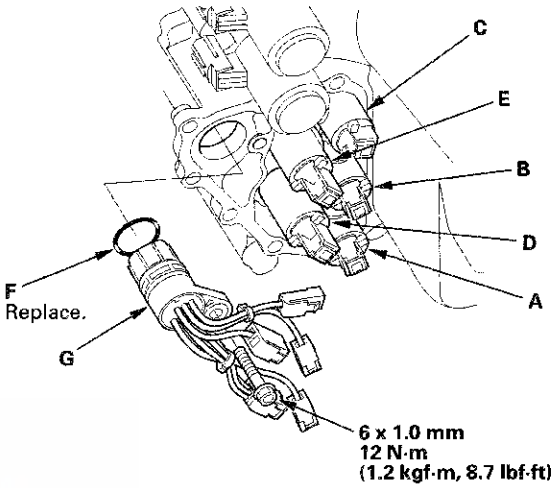

10. Connect the shift solenoid valve connectors:

- BLU wire connector to shift solenoid valve A.
- ORN wire connector to shift solenoid valve B.
- GRN wire connector to shift solenoid valve C.
- YEL, WHT, and WHT wire connector to shift solenoid valve D.
- RED wire connector to shift solenoid valve E.

11. Install a new gasket, the dowel pins, and the shift solenoid valve cover.

12. Check the connector for rust, dirt, or oil, clean or repair if necessary, then connect the connector securely.

13. Refill the transmission with ATF (see step 4 on page 14-231).

14. Install the splash shield.

15. Install the left front wheel.

ATF Level Check

NOTE: Keep all foreign particles out of the transmission.

1. Park the vehicle on level ground.

2. Warm up the engine to normal operating temperature (the radiator fan comes on), and turn the engine off. Do not allow the engine to warm up more than two cycles of the cooling fan.

   NOTE: Check the ATF level within 60—90 seconds after turning the engine off. Higher ATF level may be indicated if the radiator fan comes on twice or more.

3. Remove the ATF dipstick (yellow loop) (A) from the transmission, and wipe it with a clean cloth.

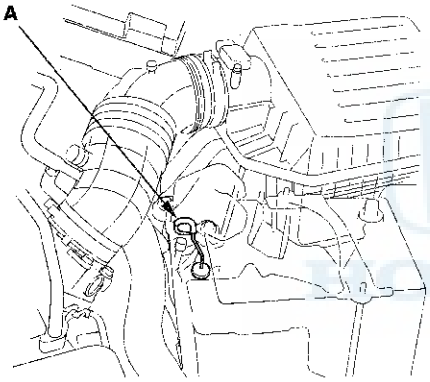

4. Insert the dipstick into the transmission.

5. Remove the dipstick, and check the ATF level. It should be between the upper mark (A) and the lower mark (B).

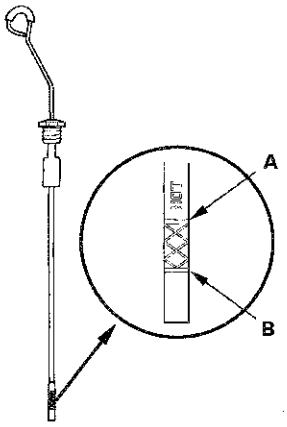

6. If the ATF level is below the lower mark, check for fluid leaks at the transmission, the ATF cooler hoses and the line joints, and the cooler lines. If a problem is found, fix it before filling the transmission with ATF.

   NOTE: If the vehicle is driven when the ATF level is below the lower mark, one or more of these symptoms may occur:
   - Transmission damage will result.
   - Vehicle does not move in any gear.
   - Vehicle accelerates poorly, and flares when starting off in D and R.
   - Vibration when the engine is idling.

7. If the level is above the upper mark, drain the ATF to proper level (see step 3 on page 14-231).

   NOTE: If the vehicle is driven when the ATF level is above the upper mark, the vehicle may creep forward in N, or have problems shifting.

8. If necessary, fill the transmission with ATF through the dipstick hole to bring the fluid level between the upper mark and the lower mark of the dipstick. Do not fill the fluid above the upper mark. Always use Honda ATF-Z1 automatic transmission fluid (ATF). Using a non-Honda ATF can affect shift quality.

9. Insert the dipstick (A) back into the transmission with the letters "ATF" pointing toward the front of the vehicle.

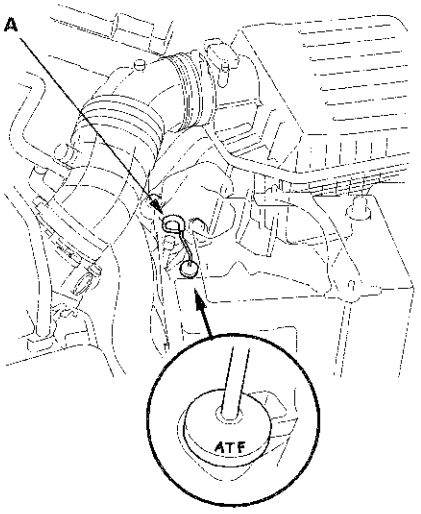

ATF Replacement

NOTE: Keep all foreign particles out of the transmission.

1. Warm up the engine to normal operating temperature (the radiator fan comes on).

2. Park the vehicle on level ground, and turn the engine off.

3. Remove the drain plug (A), and drain the automatic transmission fluid (ATF). Then reinstall the drain plug with a new sealing washer (B).

   NOTE: If ATF cooler cleaning is necessary, refer to ATF cooler cleaning (see page 14-258).

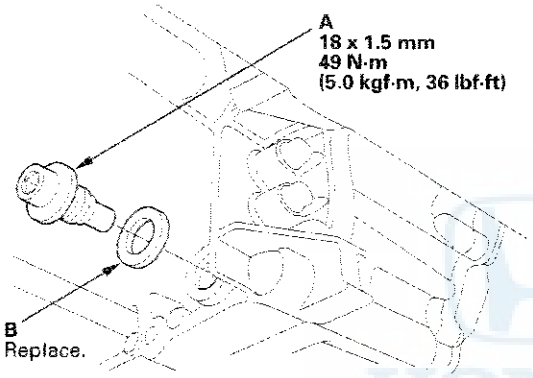

4. Remove the ATF dipstick, and refill the transmission with the recommended fluid amount through the dipstick hole to bring the fluid level between the upper mark and the lower mark of the dipstick. Always use Honda ATF-Z1 automatic transmission fluid (ATF). Using a non-Honda ATF can affect shift quality.

   Automatic Transmission Fluid Capacity:
   2.5 L (2.6 US qt) at change
   6.5 L (6.9 US qt) at overhaul

5. Insert the dipstick (A) back into the transmission with the letters "ATF" pointing toward the front of the vehicle.

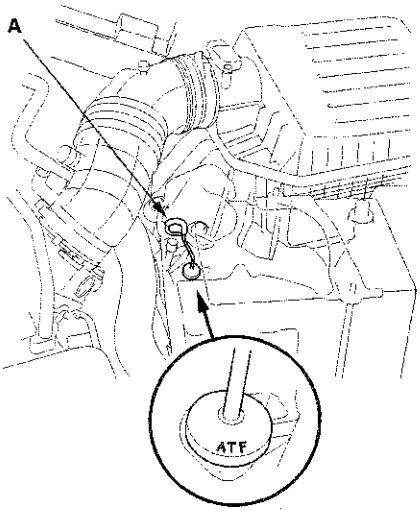

6. Check the ATF level (see page 14-230).

Transmission Removal

Special Tools Required
- Engine hanger adapter VSB02C000015
- Engine support hanger, A and Reds AAR-T1256
- Front subframe adapter VSB02C000016

These special tools are available through the Honda Tool and Equipment Program 888-424-6857.

NOTE:
- Use fender covers to avoid damaging painted surfaces.
- Special tool Reds engine support hanger AAR-T1256 must be used with the side engine mount installed.

1. Secure the hood in the wide open position with the support rod.
2. Do the battery removal procedure (see page 22-90).
3. Remove the front grille cover.
4. Remove the strut brace (A).

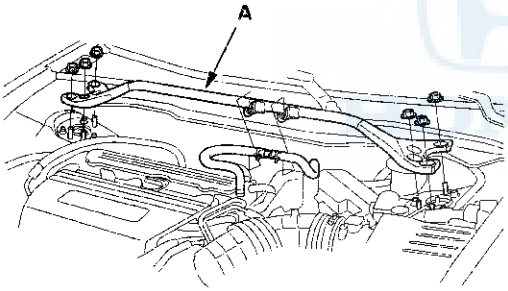

5. Remove the air cleaner assembly (see page 11-359) and the intake air duct.
6. Remove the nut securing the under-hood fuse/relay box, and swing it out of the way.
7. Loosen the two bolts located behind the battery base, and remove the two bolts securing the battery base, then remove the battery base.
8. Raise the vehicle on a lift, and make sure it is securely supported.
9. Remove the front wheels.
10. Remove the splash shield.
11. Remove the drain plug (A), and drain the automatic transmission fluid (ATF).

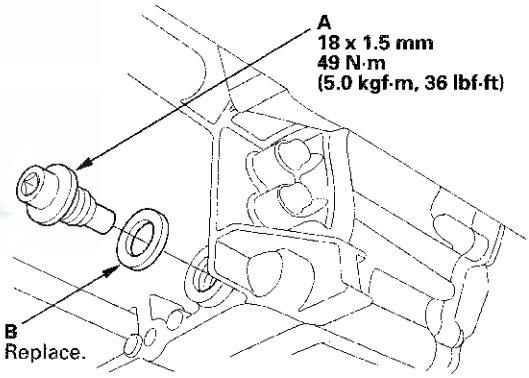

12. Reinstall the drain plug with a new sealing washer (B).

13. Disconnect the A/T clutch pressure control solenoid valve A connector (A) and the 2nd clutch transmission fluid pressure switch connector (B), and remove the harness clamps (C) from the clamp brackets (D).

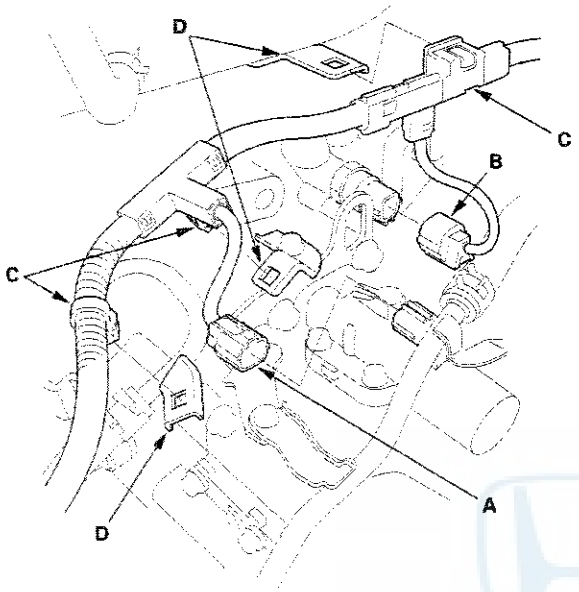

14. Remove the transmission range switch subharness connector (A) from its bracket (B), then disconnect it.

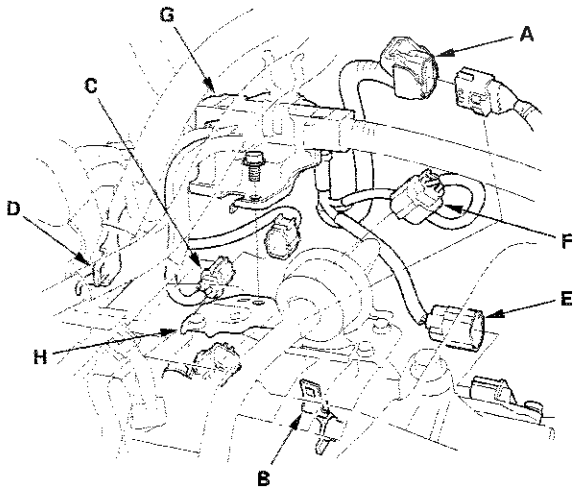

15. Remove the A/F sensor connector (C) from its bracket (D), then disconnect it.

16. Disconnect the input shaft (mainshaft) speed sensor connector (E) and the output shaft (countershaft) speed sensor connector (F).

17. Remove the harness cover mounting bolt, and remove the engine wire harness cover (G) from the ATF filter bracket (H).

18. Disconnect the shift solenoid wire harness connector (A), the A/T clutch pressure control solenoid valve B connector (B), the A/T clutch pressure control solenoid valve C connector (C), and remove the harness clamp (D) from the clamp bracket (E).

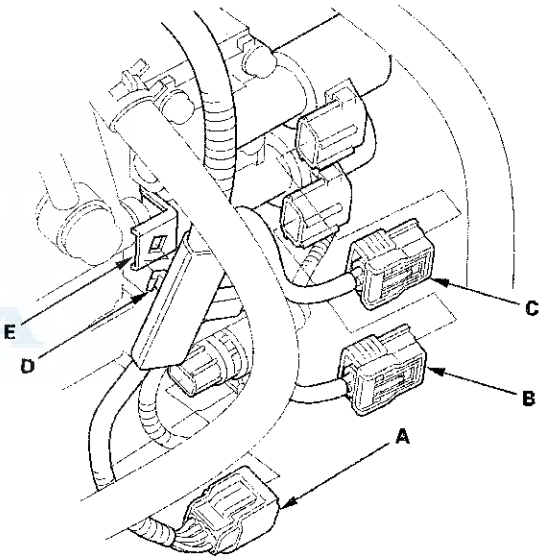

(cont'd)

Transmission Removal (cont'd)

19. Remove the ATF cooler hoses (A) from the ATF cooler lines (B). Turn the ends of the ATF cooler hoses up to prevent ATF from flowing out, then plug the ATF cooler hoses and the lines.

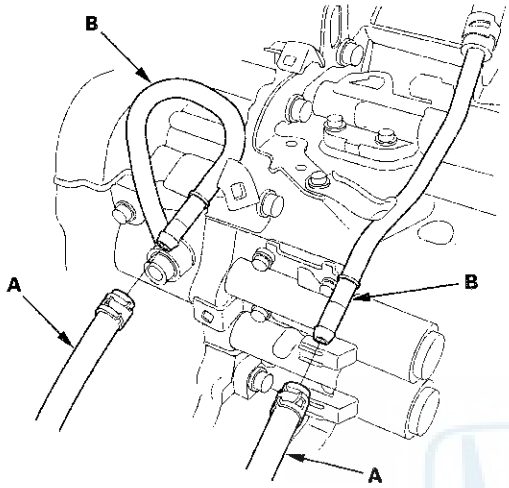

20. Check for any signs of leakage at the hose joints.

21. Disconnect the 3rd clutch transmission fluid pressure switch connector (A), and remove the harness clamp (B) from the clamp bracket (C).

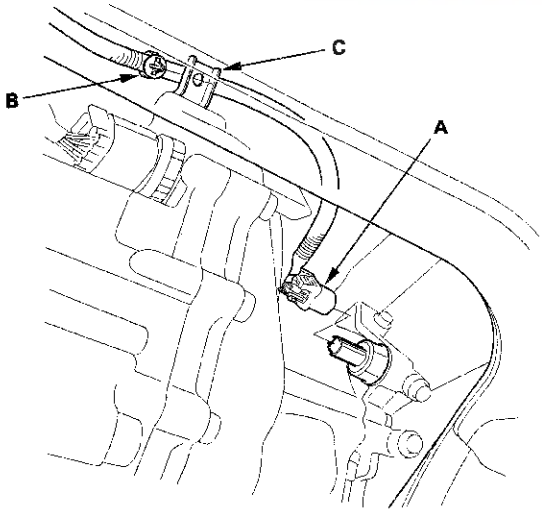

22. Remove the vacuum hose (A).

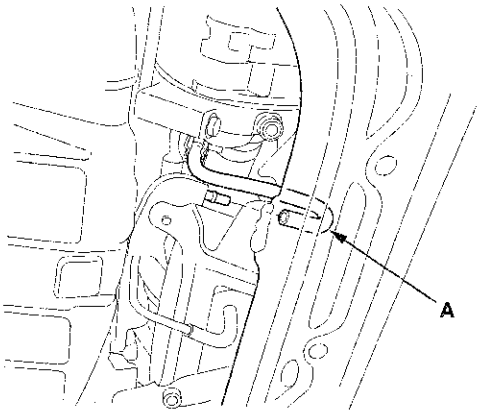

23. Disconnect the ATF cooler hose (A) from the ATF line (B). Turn the end of the ATF cooler hose up to prevent ATF from flowing out, then plug the hose and line.

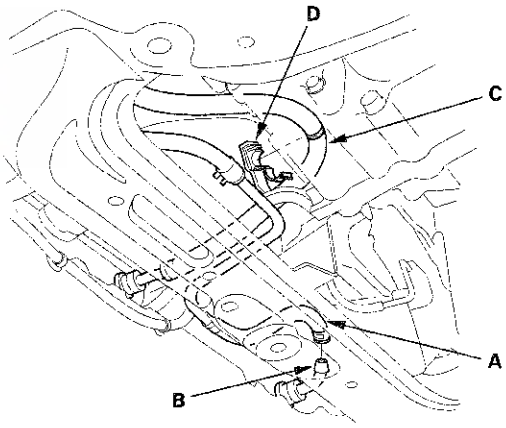

24. Remove the ATF cooler hose (C) from the hose clamp (D).

25. Remove the upper transmission mount bracket bolts.

NOTE: Do not remove the TORX bolt (A) from the upper transmission mount. If the TORX bolt is removed, the upper transmission mount must be replaced as an assembly.

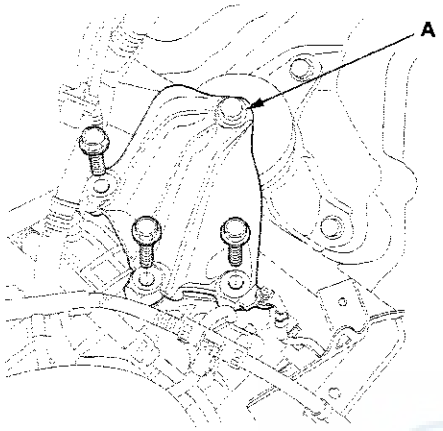

26. Attach the engine hanger adapter (VSB02C000015) to the threaded hole located on the rear side of the cylinder head.

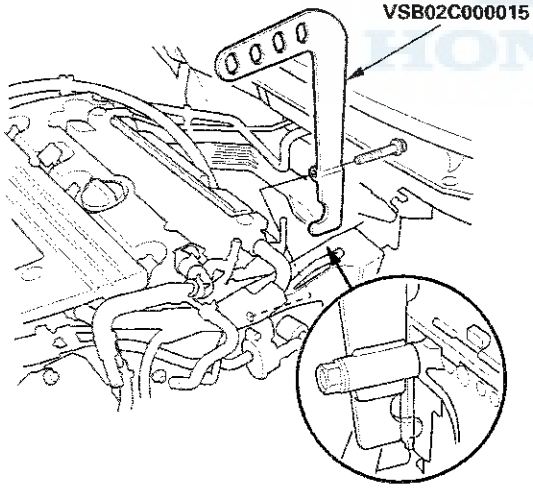

27. Install the engine support hanger (AAR-T1256) to the vehicle, and attach the hook (A) to the slotted hole in the engine hanger adapter (VSB02C000015). Tighten the wing nut (B) by hand to lift and support the engine.

NOTE:
- Be careful when working around the windshield.
- Be careful not to damage the hood opener cable when installing the engine support hanger (AAR-T1256) at the front bulkhead.

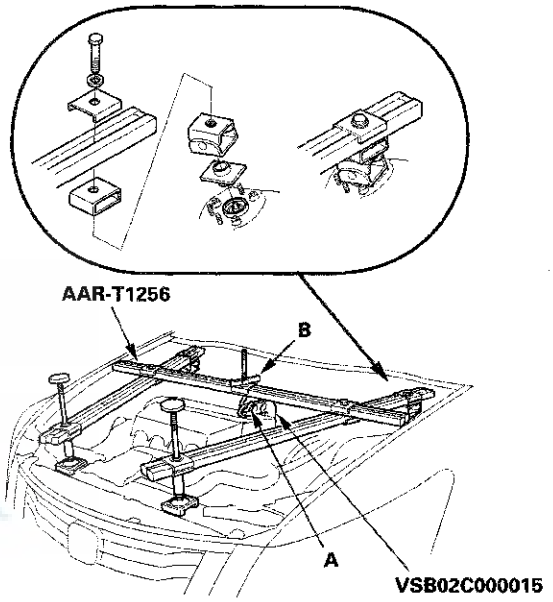

(cont'd)

Transmission Removal (cont'd)

28. Remove the vacuum hose (A) from its clamp (B).

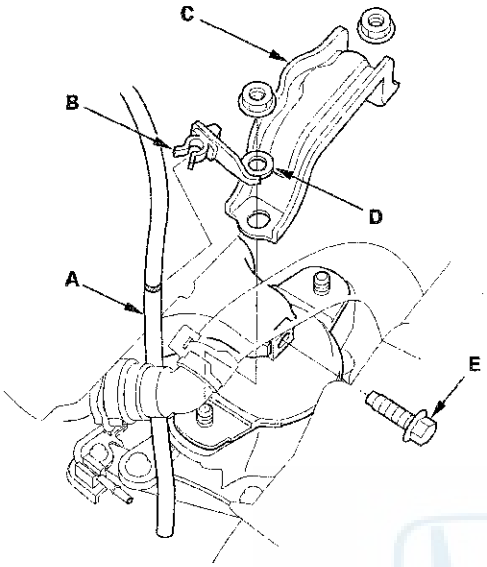

29. Remove the front mount stop (C) and the clamp bracket (D), and remove the front mount bolt (E).

30. Remove the heat shield mounting bolts (A), then remove the heat shield (B).

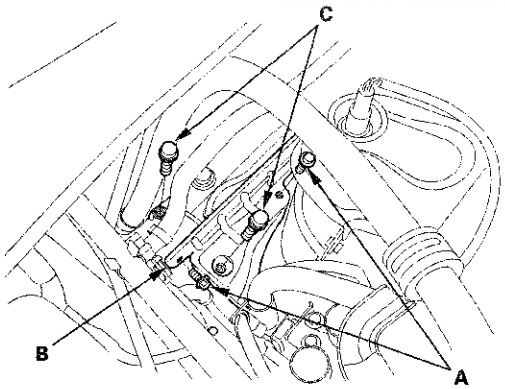

31. Remove the steering gearbox mounting bracket bolts (C).

32. Remove the power steering fluid return hose clamp bolt (A).

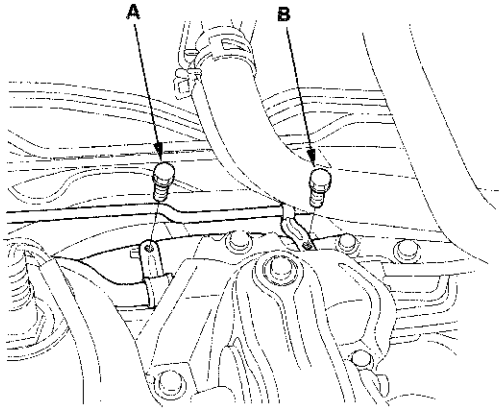

33. Remove the power steering fluid line clamp bolt (B).

34. Remove the rear engine mount bolts (A), then remove the rear engine mount (B).

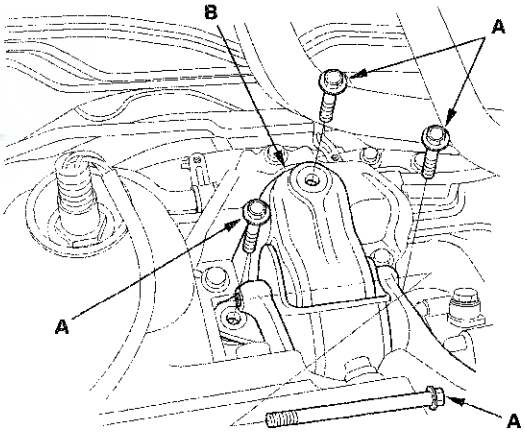

35. Remove the mounting bolts (A), then remove the rear engine mount upper bracket (B).

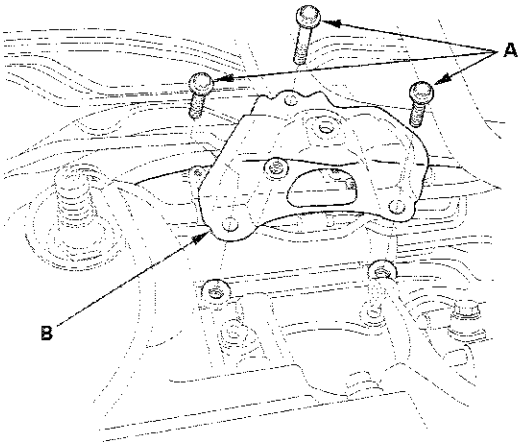

36. Remove the steering gearbox stiffeners.

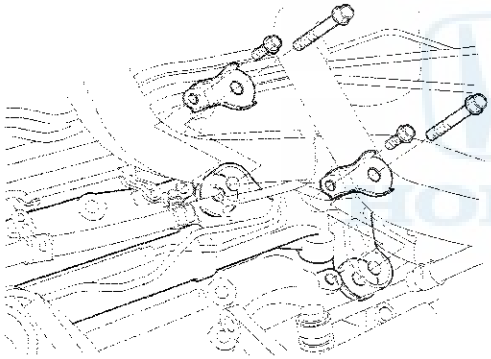

37. Remove the power steering fluid line clamp bolt (A).

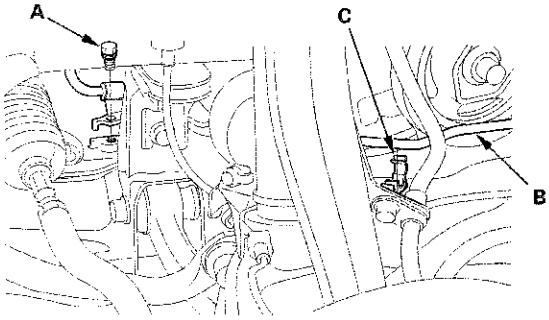

38. Remove the power steering fluid line (B) from its clamp (C).

39. Remove the bolts (B), and the self-locking nuts (C).

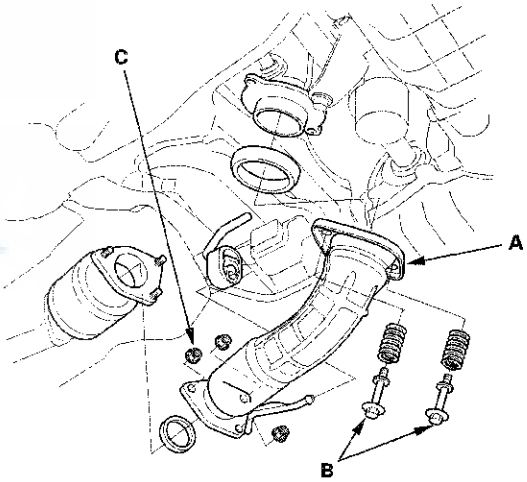

40. Remove exhaust pipe A.

(cont'd)

Transmission Removal (cont'd)

41. Remove the cotter pins (A), the castle nuts (B), the damper pinch bolts (C), the damper fork mounting nuts (D), the bolts (E), and the damper forks (F), then separate the ball joints (G) from the lower arms (see page 18-21).

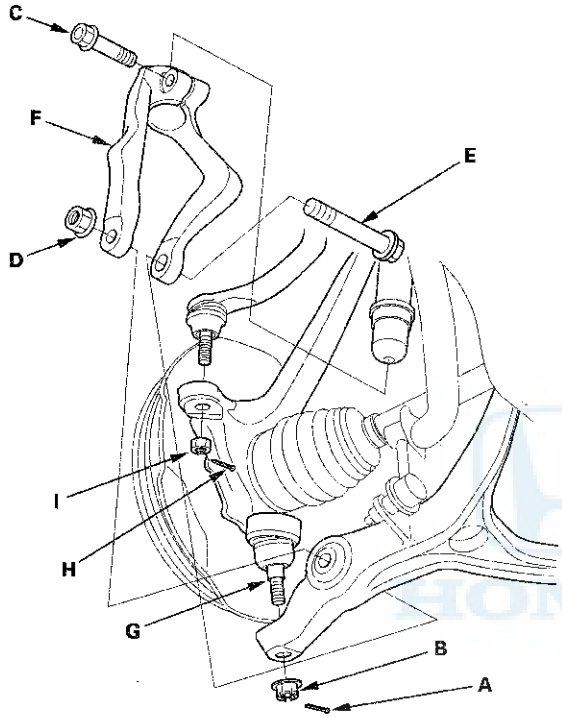

42. Remove the cotter pins (H) and the nuts (I), then separate the tie-rod end ball joints from the knuckles (see step 26 on page 17-40).

43. Remove the torque converter cover (A), and remove the drive plate bolts (B) (8) while rotating the crankshaft pulley.

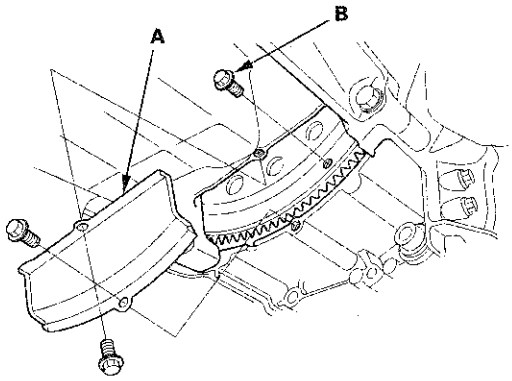

44. VIN begins with JHM: Remove the shift cable cover (A), then remove the two bolts securing the shift cable bracket (B).

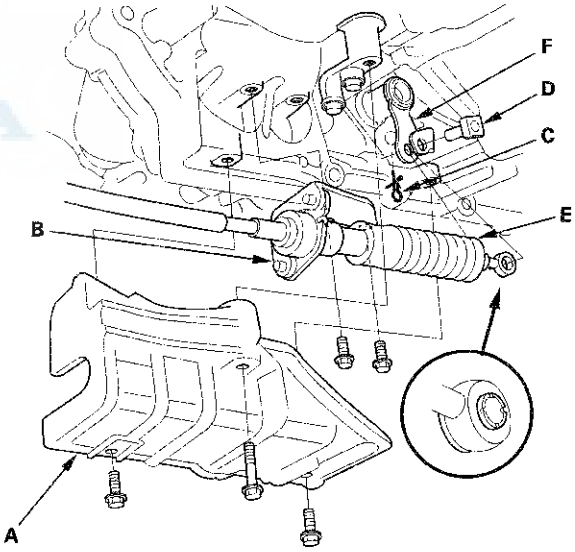

45. VIN begins with JHM: Remove the spring clip (C) and the control pin (D), then separate the shift cable (E) from the selector control lever (F). Do not bend the shift cable excessively.

46. VIN begins with IHG: Remove the shift cable cover (A), and remove the two bolts securing the shift cable bracket (B).

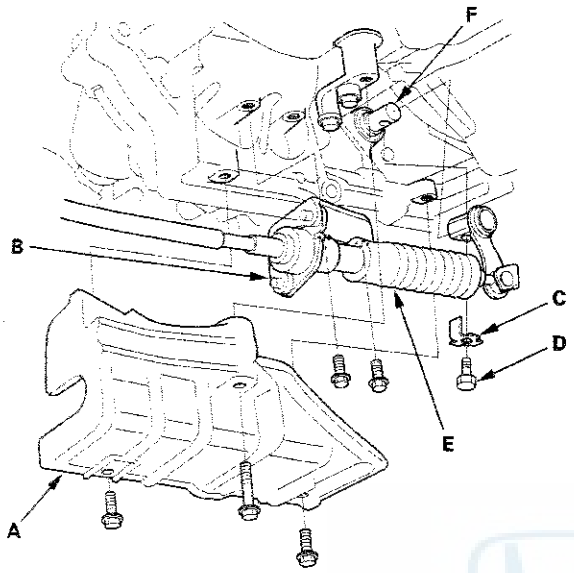

47. VIN begins with IHG: Pry up the lock tab of the lock washer (C), and remove the lock bolt (D) and the lock washer, then separate the shift cable (E) from the selector control shaft (F). Do not bend the shift cable excessively.

48. Remove the transmission lower mount nuts.

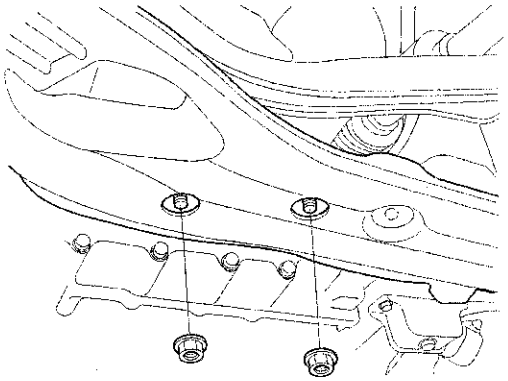

49. Remove both front subframe mid-mount bolts.

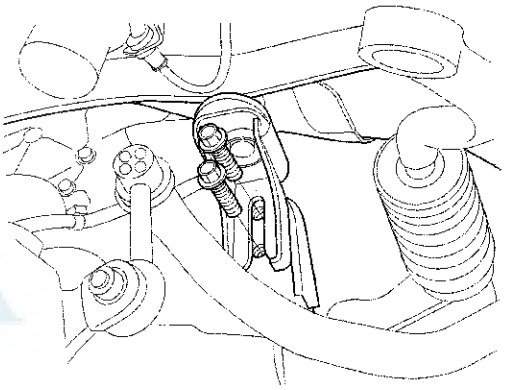

(cont'd)

Transmission Removal (cont'd)

50. Hang the steering gearbox to the body with a strap.

51. Attach the front subframe adapter (VSB02C000016) to the front subframe by looping the strap (A) over the front of the front subframe, then secure the strap with the stop (B), then tighten the wing nut (C).

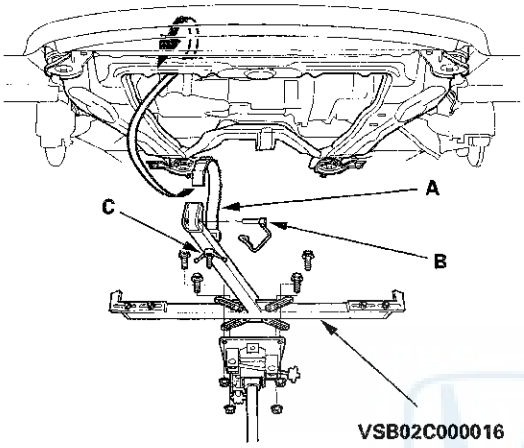

52. Raise a jack and line up the slots in the arms with the bolt holes on the corner of the jack base, then tighten the bolts.

53. Remove the four bolts (A) securing the stiffeners, and remove the four bolts (B) securing the front subframe, then lower the front subframe.

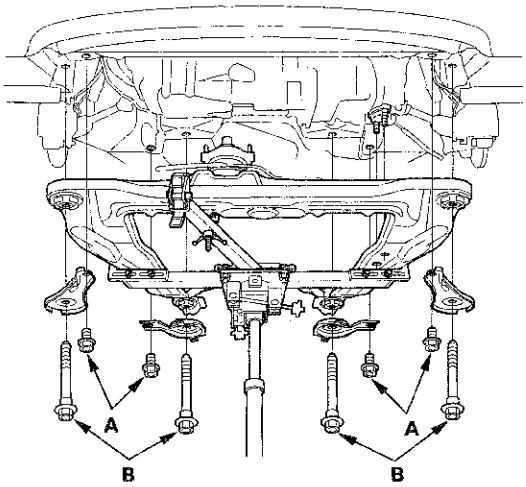

54. Place a jack under the transmission.

55. Remove the transmission lower mount.

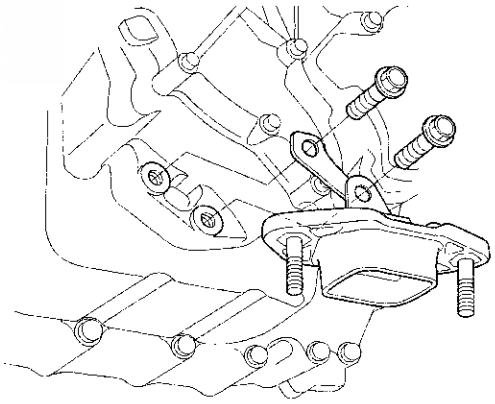

56. Remove the left side driveshaft from the differential and the right side driveshaft from the intermediate shaft. Coat all precision machined surfaces with clean engine oil, then put plastic bags over the driveshaft ends. Hang the driveshafts to the body with a strap.

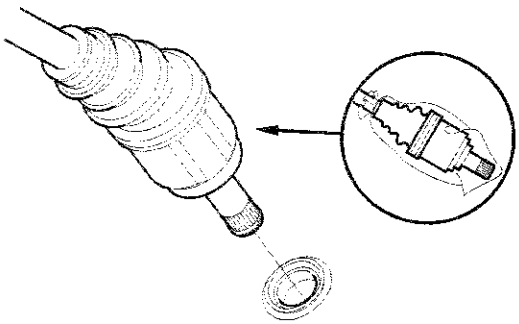

57. Remove the intermediate shaft. Coat all precision machined surfaces with clean engine oil, then put plastic bags over the intermediate shaft ends.

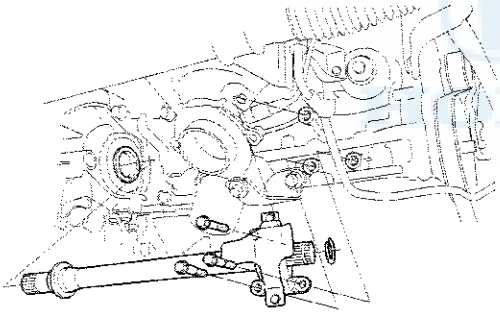

58. Remove the rear engine mount bracket.

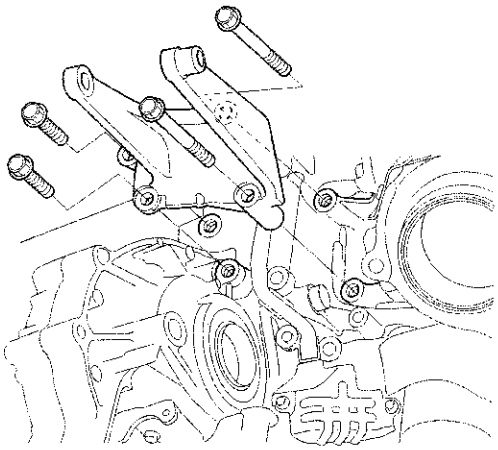

(cont'd)

Transmission Removal (cont'd)

59. Remove the front engine mount bracket.

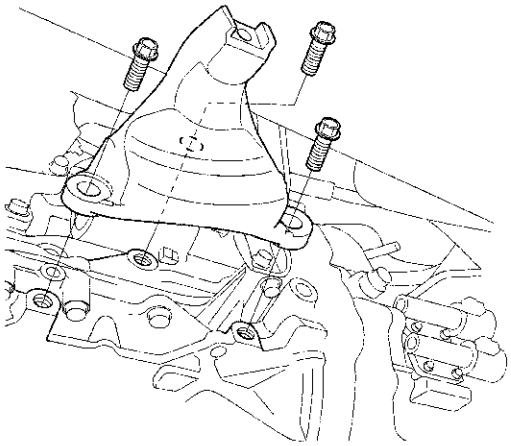

60. Remove the jack.

61. Remove the upper transmission housing mounting bolts.

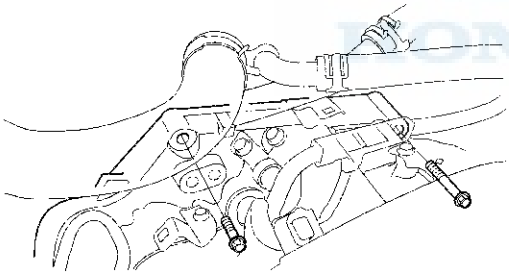

62. Lower the transmission by loosening the wing nut on the engine support hanger, and tilt the engine just enough for the transmission to clear the side frame. Check that the transmission is completery free of the ATF and coolant hoses, vacuum hoses, and the electrical wiring.

63. Place the jack under the transmission.

64. Remove the front transmission housing mounting bolts.

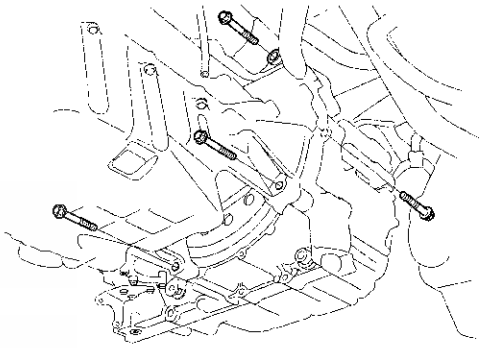

65. Remove the crankshaft position (CKP) sensor cover.

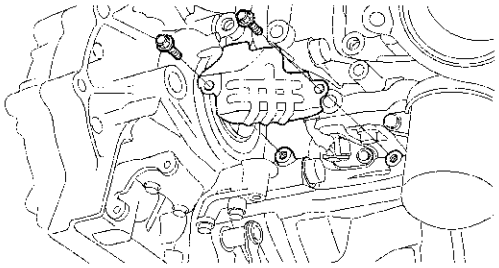

66. Remove the rear transmission housing mounting bolts.

NOTE: Be careful not to damage the CKP sensor and the sensor harness.

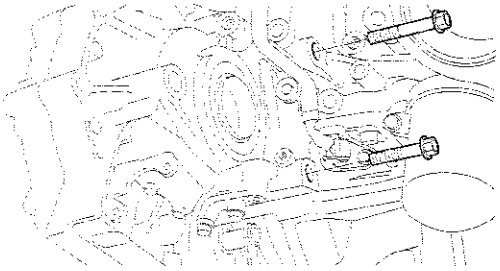

67. Check once again that the transmission is free of vacuum hoses, ATF and coolant hoses, and electrical wiring.

68. Slide the transmission away from the engine to remove it from the vehicle.

69. Remove the torque converter, the O-ring, and the dowel pins.

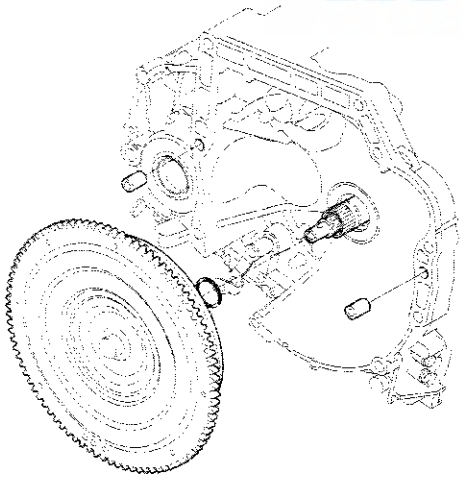

70. Inspect the drive plate, and replace it if it is damaged.

Transmission Installation

Special Tools Required
- Engine hanger adapter VSB02C000015
- Engine support hanger, A and Reds AAR-T1256
- Front subframe adapter VSB02C000016
- Subframe alignment pin 070AG-SJAA10S

These special tools are available through the Honda Tool and Equipment Program 888-424-6857.

NOTE: Use fender covers to avoid damaging painted surfaces.

1. If you did not clean the ATF cooler when you removed the transmission, and you are installing an overhauled or remanufactured transmission, clean the ATF cooler (see page 14-258).

2. Install a new O-ring (A) on the torque converter (B), then install the torque converter on the mainshaft (C).

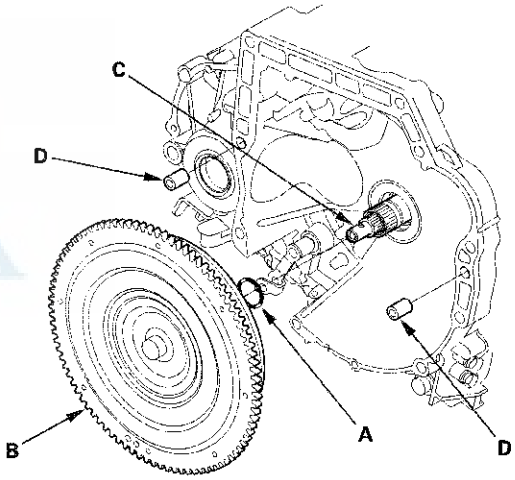

3. Install the 14 x 20 mm dowel pins (D) in the torque converter housing.

4. Place the transmission on a jack, and raise the transmission to the engine level, then fit the transmission to the engine.

(cont'd)

Transmission Installation (cont'd)

5. Install the rear transmission housing mounting bolts.

   NOTE: Be careful not to damage the crankshaft position (CKP) sensor and the sensor harness.

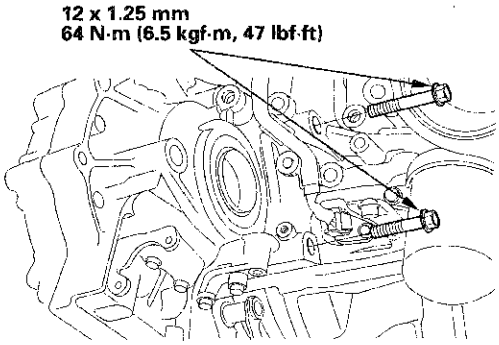

6. Install the CKP sensor cover.

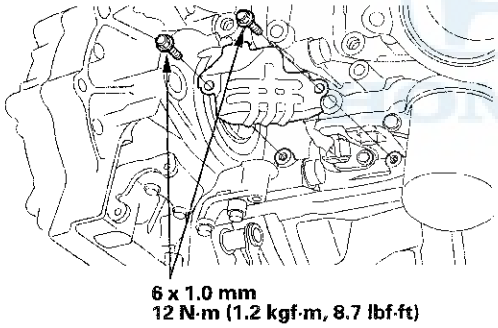

7. Install the front transmission housing mounting bolts.

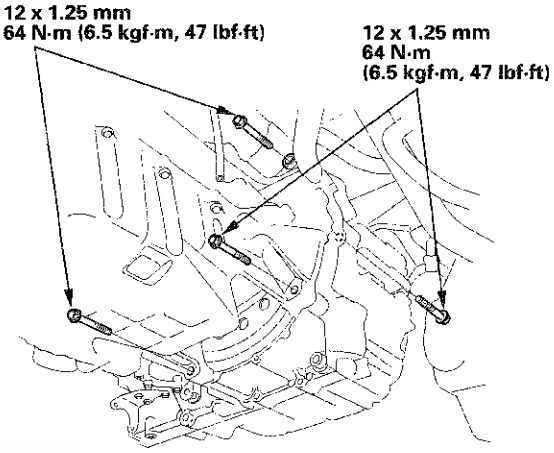

8. Remove the jack.

9. Install the upper transmission housing mounting bolts.

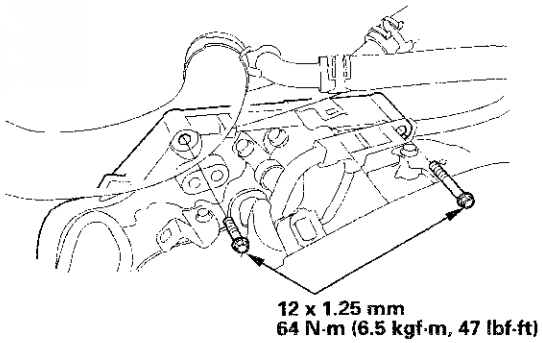

10. Place the jack under the transmission.

11. Install the front engine mount bracket with new bolts.

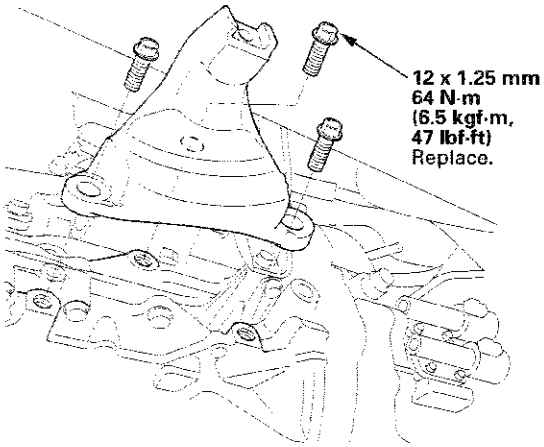

12. Install the rear engine mount bracket with new bolts.

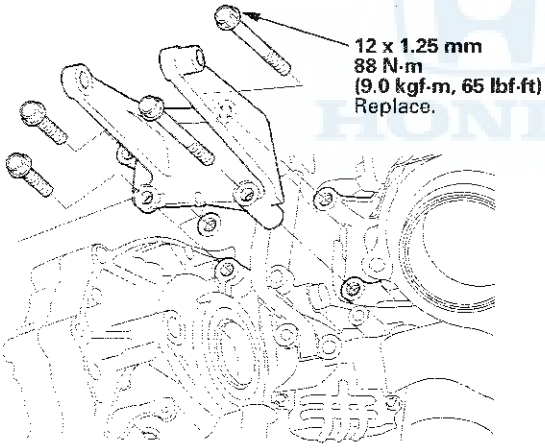

13. Install a new set ring (A) on the intermediate shaft (B).

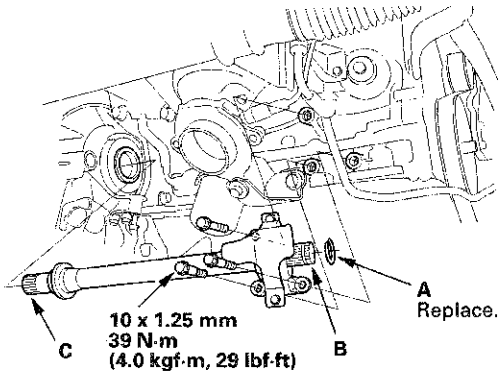

14. Clean the areas where the intermediate shaft contacts the transmission (differential) with solvent, and dry with compressed air. Apply ATF to the intermediate shaft splines (C), then install the intermediate shaft. Be sure not to allow dust or other foreign particles to enter the transmission.

15. Install new set ring (A) on the left driveshaft (B).

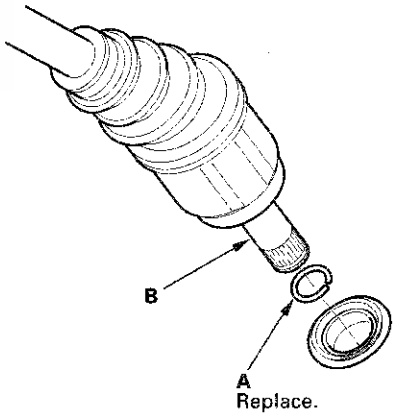

(cont'd)

Transmission Installation (cont'd)

16. Clean the areas where the left driveshaft contacts the transmission (differential) with solvent, and dry with compressed air. Then install the left driveshaft. Be sure not to allow dust or other foreign particles to enter the transmission. Turn the steering knuckle fully outward, and slide the driveshaft into the differential until you feel its set ring fully engage the side gear.

17. Apply the super high-temp urea grease (P/N 08798-9002) to the right driveshaft inboard-joint splines.

18. Slide the right driveshaft over the intermediate shaft splines until you feel the driveshaft fully engage the intermediate shaft set ring.

19. Install the transmission lower mounts with new bolts.

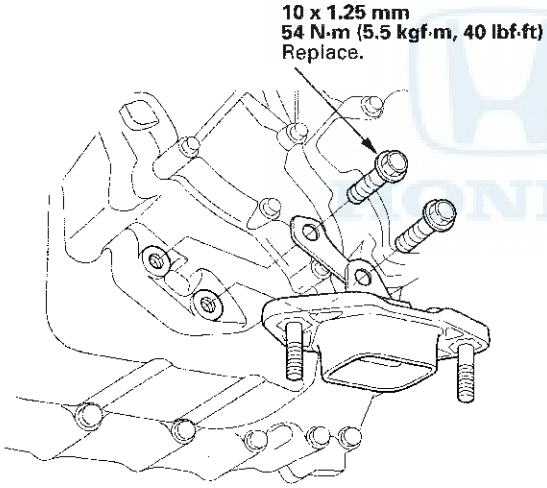

20. Set the front subframe adapter (VSB02C000016) to the front subframe by looping the strap (A) over the front of the front subframe, then secure the strap with the stop (B), then tighten the wing nut (C).

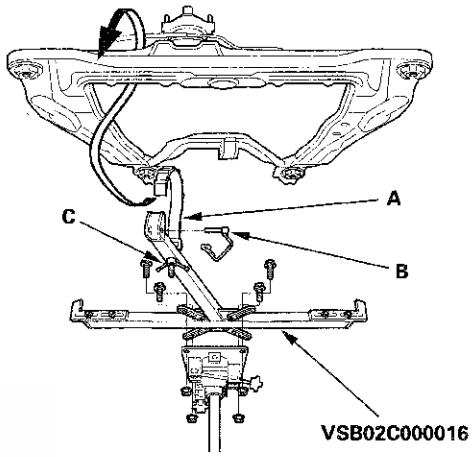

21. Raise the front subframe up to the body, then loosely install new front subframe mounting bolts (A), the stiffener mounting bolts (B), and new stiffener mounting bolts (C).

NOTE: Be careful when connecting these items:
- Front engine mount and its bracket
- Transmission lower mount and front subframe
- Damper forks and lower arms

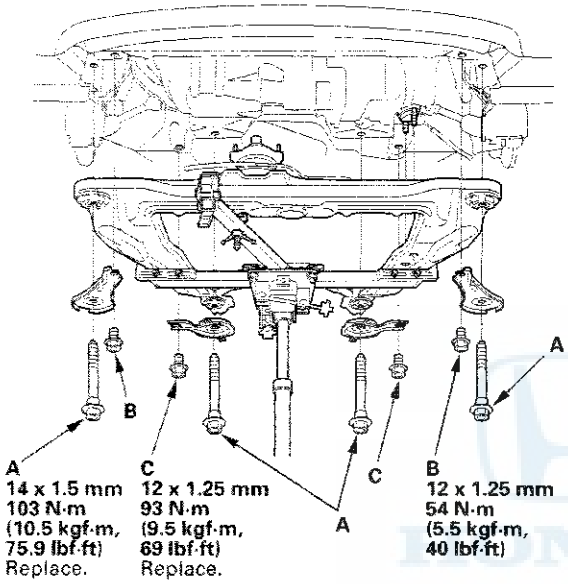

22. Loosely tighten the front subframe mounting bolt (A) in the right rear stiffener until the front subframe insulator contacts the body; insert the subframe alignment pin (070AG-SJAA10S) through the positioning slot (B) on the right rear stiffener, through the positioning hole (C) on the front subframe, and into the positioning hole on the body.

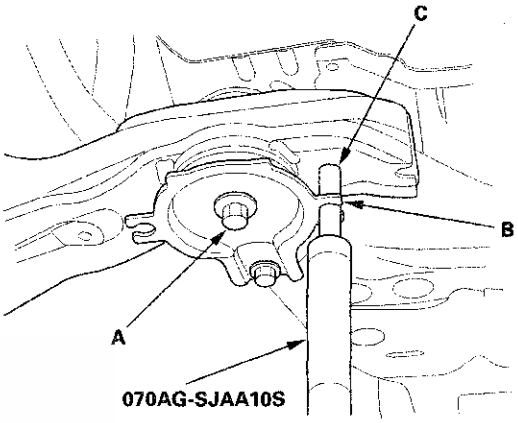

23. Loosely tighten the front subframe mounting bolt in the left rear stiffener in the same manner in step 22.

24. Reinsert the subframe alignment pin through the positioning slot on the right rear stiffener, through the positioning hole on the front subframe, and into the positioning hole on the body, then tighten the front subframe mounting bolt to the specified torque.

25. Tighten the subframe mounting bolt in the left rear stiffener in the same manner in step 24.

26. Tighten the front subframe mounting bolts in the right front stiffener and the left front stiffener to the specified torque.

(cont'd)

Transmission Installation (cont'd)

27. Check that the positioning holes and slots are aligned using the subframe alignment pin.

28. Tighten the rear and front stiffener mounting bolts to the specified torque.

29. Remove the jack and the front subframe adapter.

30. Replace the front subframe mid-mount mounting bolts.

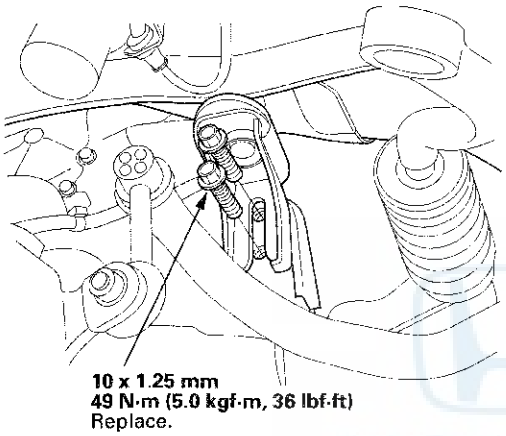

31. Install the transmission lower mount nuts.

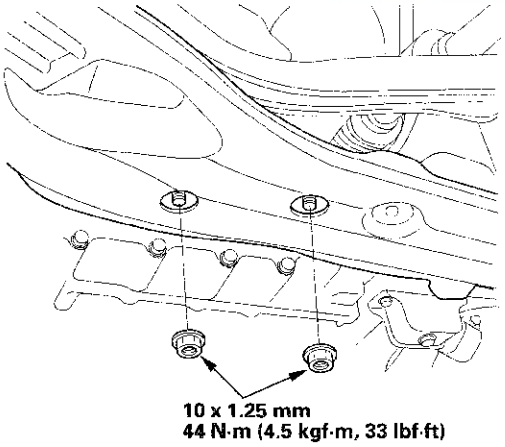

32. VIN begins with JHM: Apply molybdenum grease to the hole in the bushing (A) in the shift cable end (B). Attach the shift cable end to the control lever (C), then insert the control pin (D) into the control lever hole through the shift cable end, and secure the control pin with the spring clip (E). Do not bend the shift cable excessively.

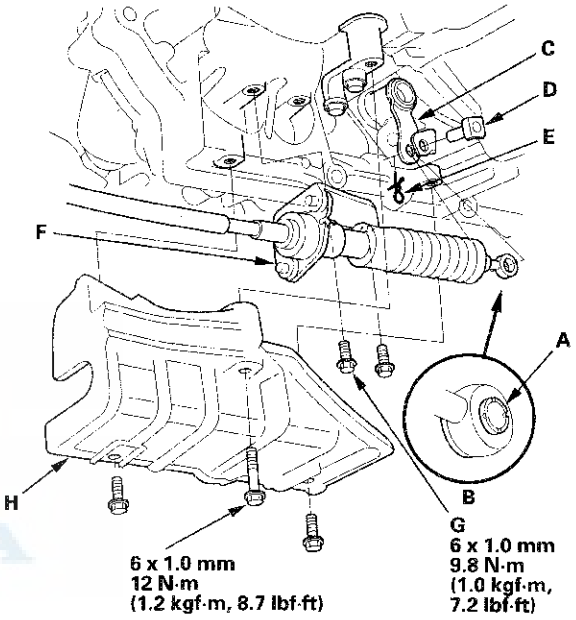

33. VIN begins with JHM: Install the shift cable bracket (F) with the bolts (G).

34. VIN begins with JHM: Install the shift cable cover (H).

35. VIN begins with IHG: Install the control lever (A) over the selector control shaft (B). Secure the control lever with a new lock washer (C) and the lock bolt (D), then bend the lock tab of the lock washer against the bolt head.

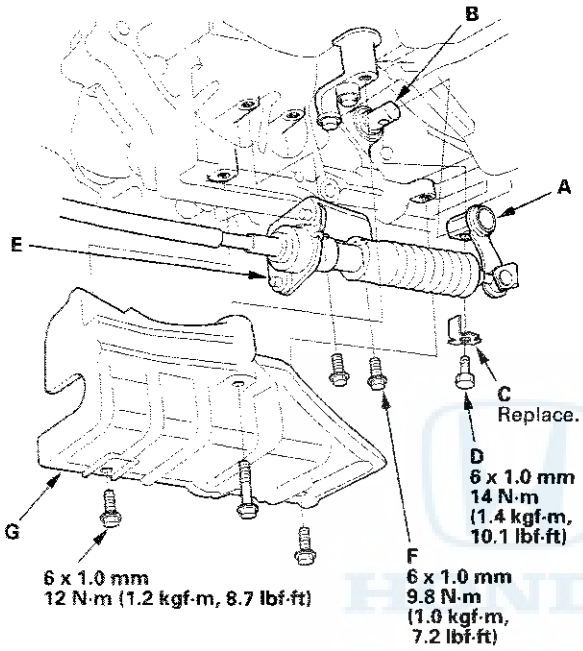

36. VIN begins with IHG: Install the shift cable bracket (E) with the bolts (F).

37. VIN begins with IHG: Install the shift cable cover (G).

38. Attach the torque converter to the drive plate with the eight bolts (A). Rotate the crankshaft pulley as necessary to tighten the bolts to 1/2 of the specified torque, then to the final torque, in a crisscross pattern. After tightening the last bolt, check that the crankshaft rotates freely.

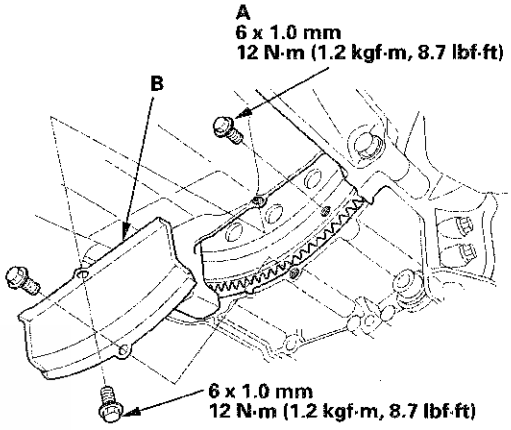

39. Install the torque converter cover (B).

(cont'd)

Transmission Installation (cont'd)

40. Install exhaust pipe A with the bolts, new self-locking nuts, and new gaskets (B) (C).

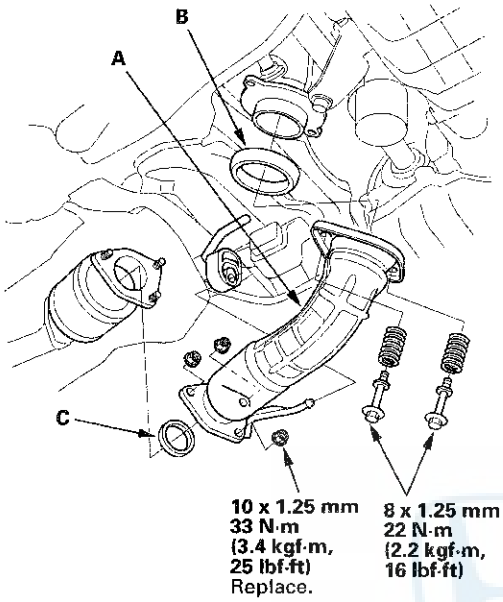

41. Install the damper forks (A) over the driveshaft and onto the lower arms (B) (see step 4 on page 18-33). Loosely install the damper pinch bolts (C) into the damper forks.

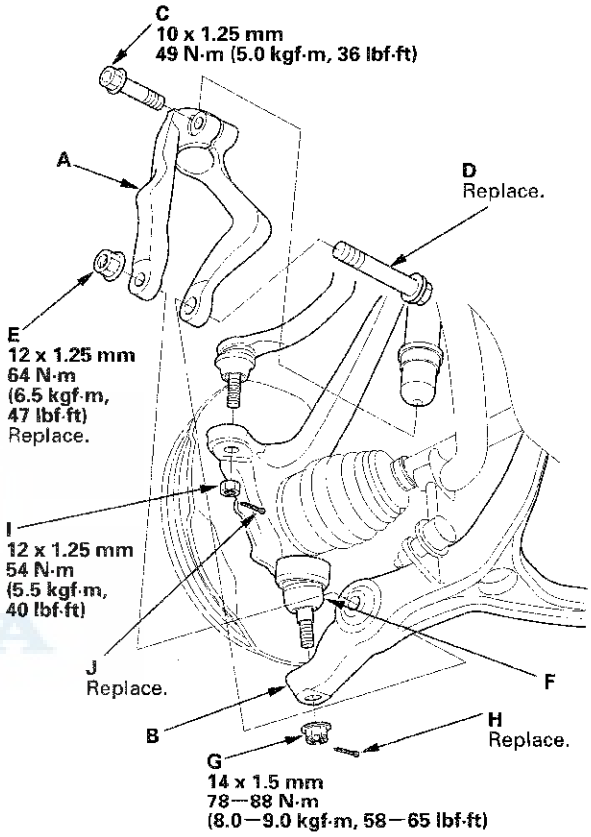

42. Connect the damper forks and the lower arms with new damper fork mounting bolts (D), then loosely tighten a new mounting nuts (E).

43. Install the ball joints (F) on the lower arms with the castle nuts (G) (see page 18-21).

    NOTE: Do not install the new cotter pins (H) onto the castle nuts until the castle nuts tightened to the specified torque.

44. Install the tie-rod end ball joints to each knuckle with the nuts (I) and new cotter pins (J) (see step 32 on page 17-62).

45. Position the steering gearbox on the rear engine mount base bracket.

46. Secure the power steering fluid line clamp (A) with the bolt.

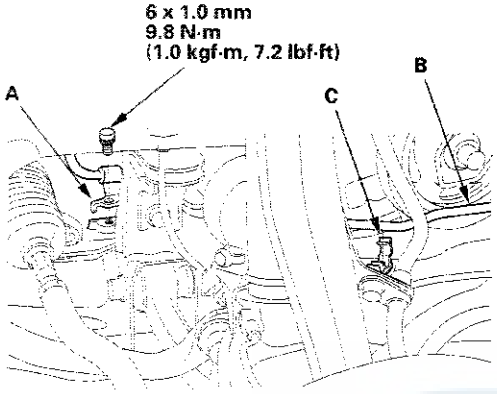

47. Secure the power steering fluid line (B) with the clamp (C).

48. Install the washers (A) between the steering gearbox and the rear engine mount base bracket, then install the gearbox stiffeners (B) and the bolts on the left side of the steering gearbox, and loosely tighten the bolts.

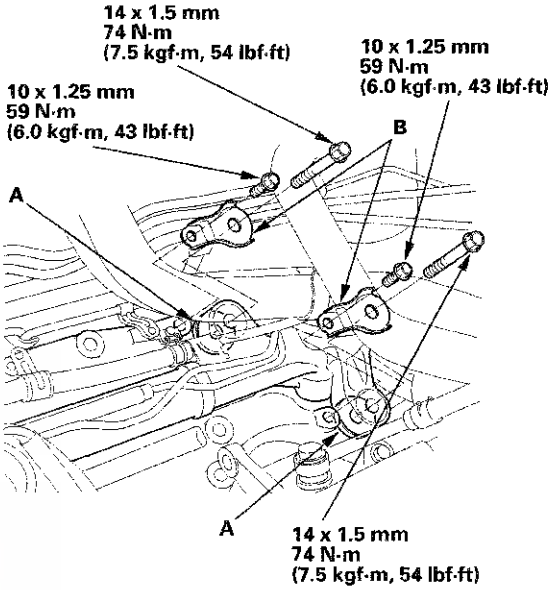

49. Install the steering gearbox mounting bracket bolts (A), then tighten the bolts on the left side of the steering gearbox to the specified torque.

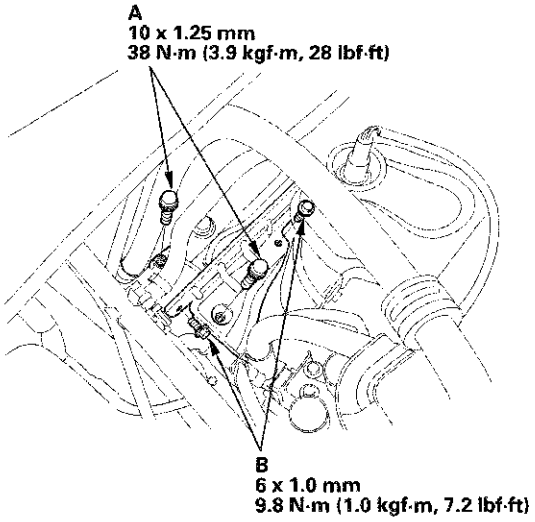

50. Install the heat shield with the bolts (B).

(cont'd)

Transmission Installation (cont'd)

51. Install the rear engine mount upper bracket (A), the bolts (B), and a new bolt (C), and tighten the bolts.

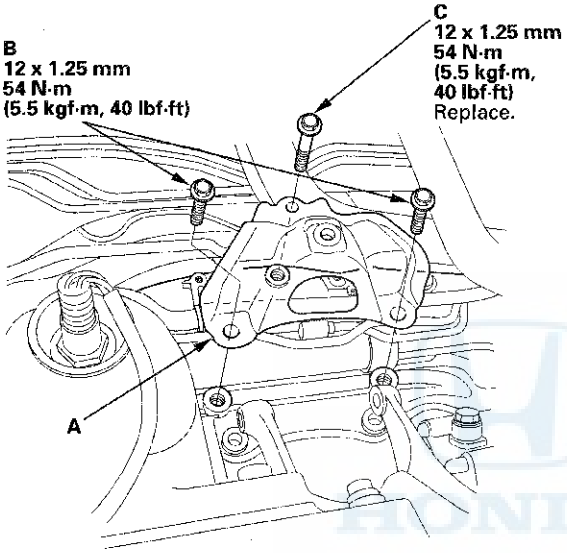

52. Install the rear engine mount with new bolts (A).

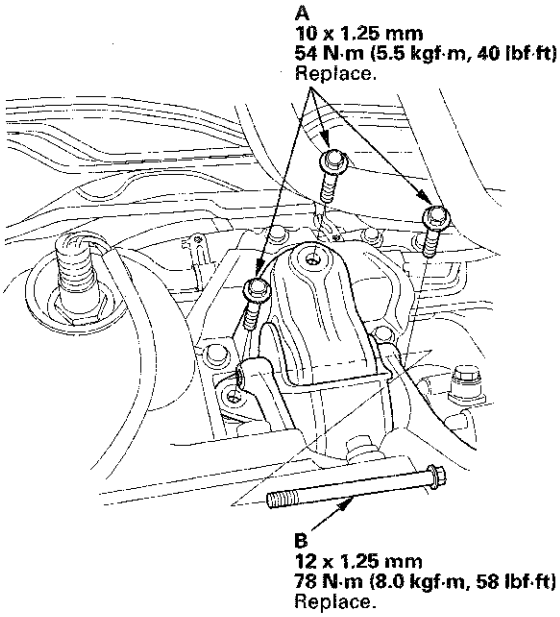

53. Loosely install a new rear engine mount bolt (B).

54. Secure the power steering fluid line clamp (A) and the fluid return hose clamp (B) with the bolts.

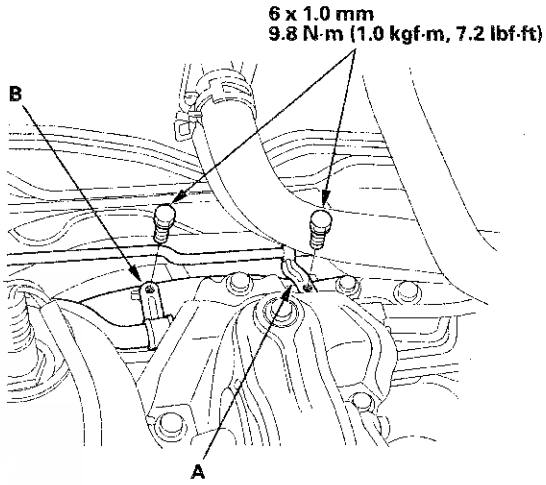

55. Loosely install a new front engine mount bolt (A).

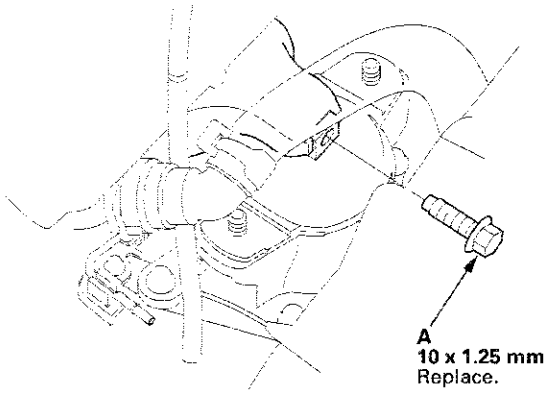

56. Loosely install new transmission upper mount bracket bolts.

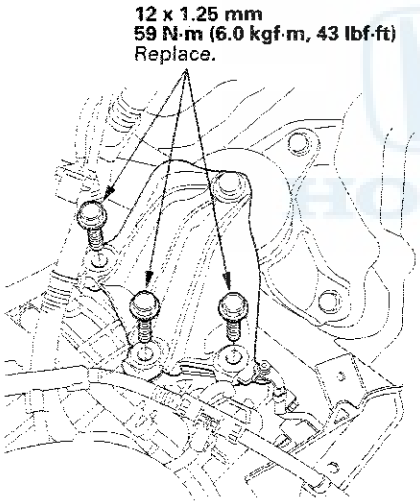

57. Remove the engine support hanger.

58. Remove the engine hanger adapter (VSB02C000015) from the cylinder head.

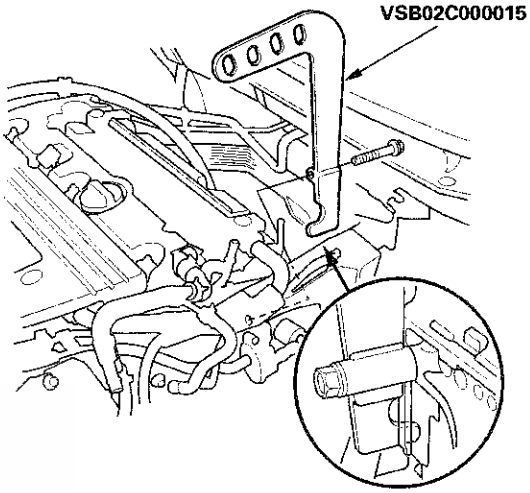

(cont'd)

Transmission Installation (cont'd)

59. Tighten the front engine mount bolt (A).

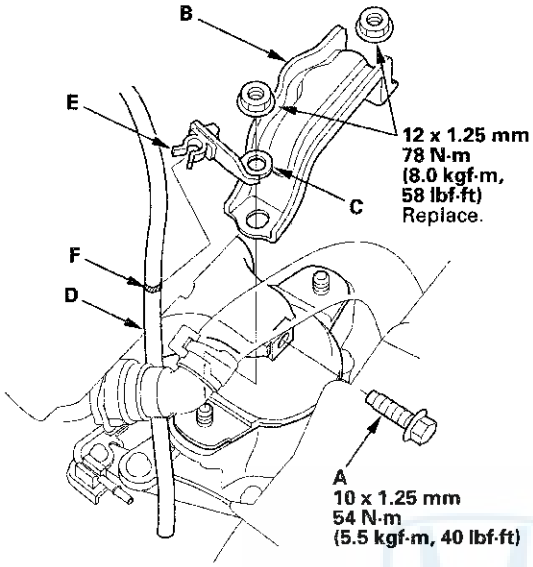

60. Install the front engine mount stop (B) and the vacuum hose clamp bracket (C).

61. Install the vacuum hose (D) on its clamp (E) at the mark (F).

62. Tighten the rear engine mount bolt to 78 N·m (8.0 kgf·m, 58 lbf·ft).

63. Tighten the transmission upper mount bolts to 59 N·m (6.0 kgf·m, 43 lbf·ft).

64. Connect the ATF cooler hose (A) to the ATF cooler line (B), and secure it with the clip (see page 14-260).

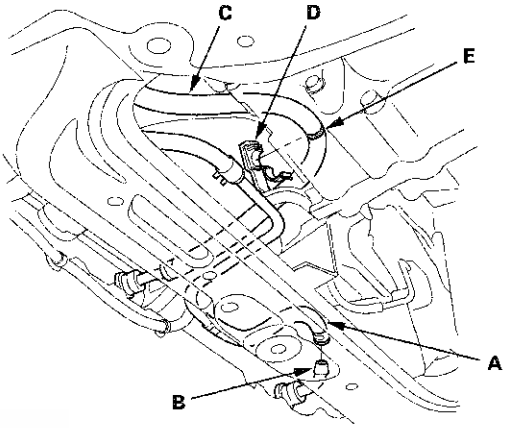

65. Install the ATF cooler hose (C) on the clamp (D) at the mark (E).

66. Install the vacuum hose (A).

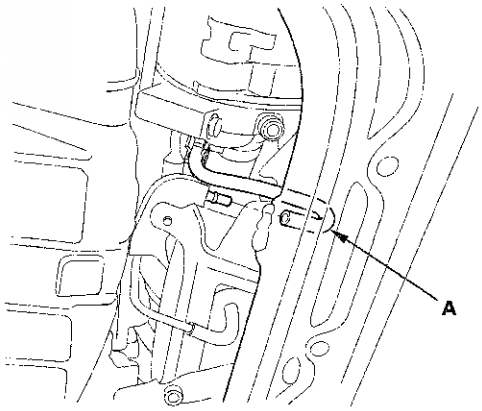

67. Connect the 3rd clutch transmission fluid pressure switch connector (A), and install the harness clamp (B) on the clamp bracket (C).

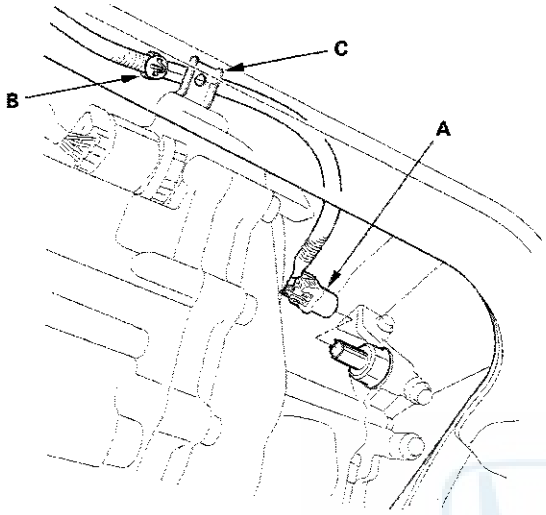

68. Connect the ATF cooler hoses (A) to the ATF cooler lines (B), and secure the hoses with the clips (see page 14-260).

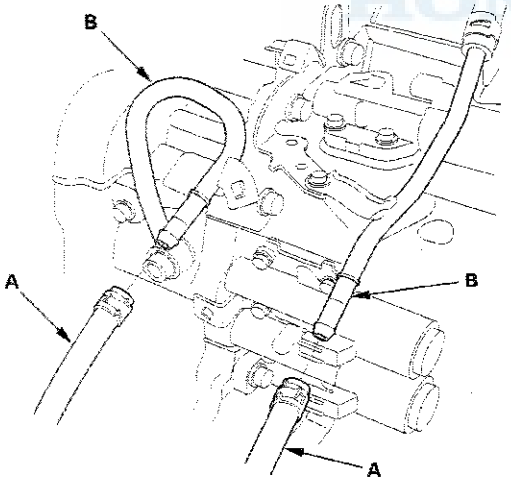

69. Connect the shift solenoid wire harness connector (A), the A/T clutch pressure control solenoid valve B connector (B), and the A/T clutch pressure control solenoid valve C connector (C), and install the harness clamp (D) on the clamp bracket (E).

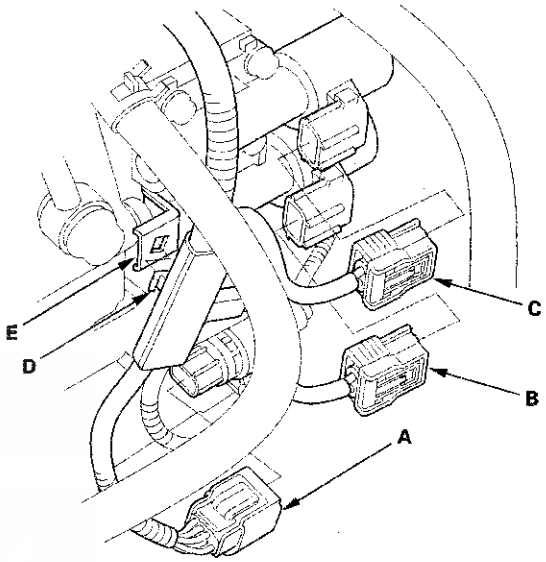

70. Connect the output shaft (countershaft) speed sensor connector (A) and the input shaft (mainshaft) speed sensor connector (B).

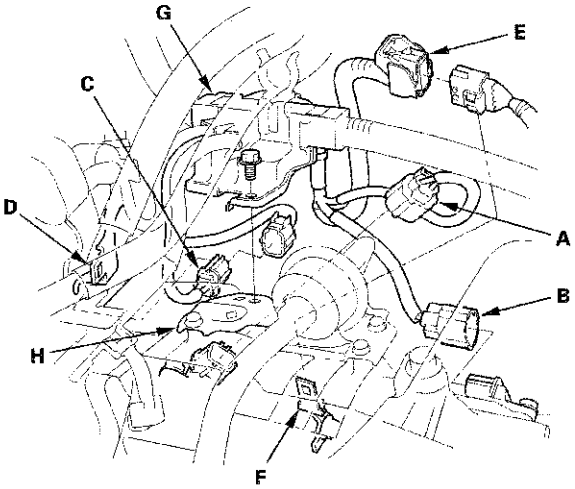

(cont'd)

Transmission Installation (cont'd)

71. Connect the A/F sensor connector (C), then install it on its bracket (D).

72. Connect the transmission range switch subharness connector (E), then install it on its bracket (F).

73. Install the engine wire harness cover (G) on the ATF filter bracket (H).

74. Connect the A/T clutch pressure control solenoid valve A connector (A) and the 2nd clutch transmission fluid pressure switch connector (B), and install the harness clamps (C) on the harness clamp brackets (D).

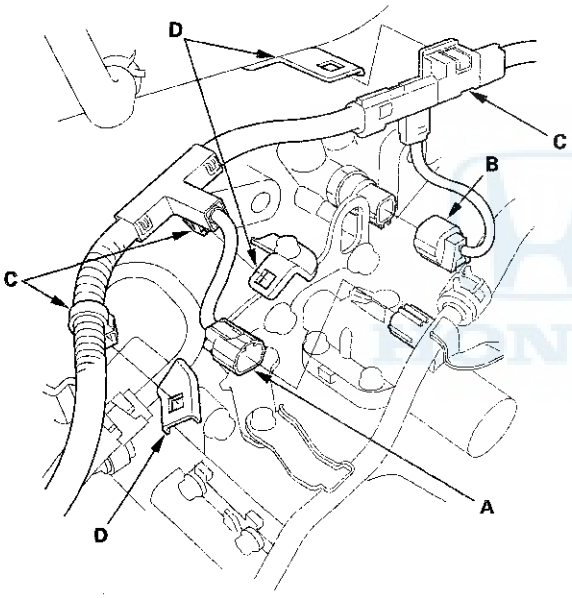

75. Install the under-hood fuse/relay box.

76. Refill the transmission with ATF (see step 4 on page 14-231).

77. Install the battery base.

78. Install the air cleaner assembly (see page 11-359) and the intake air duct.

79. Do the battery installation procedure (see page 22-90).

80. Loosely install the front strut brace mounting nuts (A) on the front strut brace (B), and install the hose (C) on its clamps (D).

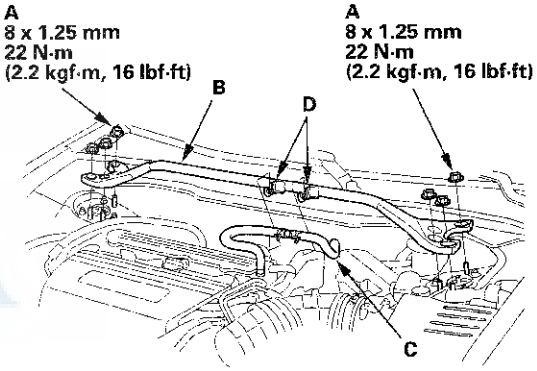

81. Set the parking brake. Start the engine, and shift the transmission through all gears three times.

82. Check the shift lever operation, the A/T gear position indicator operation, and the shift cable adjustment.

83. Place a floor jack under the lower arm, and raise the front suspension to load it with the vehicle's weight. Do not place the jack against the ball joint pin of the knuckle.
Tighten the damper pinch bolt and the damper fork mounting nut while holding the mounting bolt to the specified torque.

84. Tighten the lower arm mounting castle nuts to the specified torque, then install the new cotter pins onto the castle nuts (see step 5 on page 18-21).

85. Tighten the front strut brace mounting nuts on top of the damper to the specified torque.

86. Install the front wheels.

87. Install the splash shield.

88. Install the front grille cover.

89. Check and adjust the front wheel alignment (see page 18-5).

90. Start the engine with the shift lever in P or N, and warm it up to normal operating temperature (the radiator fan comes on).

91. Turn the engine off, and check the ATF level (see page 14-230).

92. Do the road test (see page 14-206).

Drive Plate Removal and Installation

1. Remove the transmission assembly (see page 14-232).

2. Remove the drive plate (A) and the washer (B) from the engine.

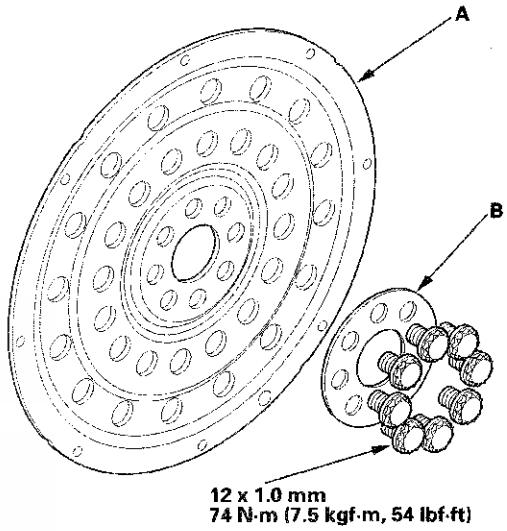

3. Install the drive plate and the washer on the engine, and tighten the eight bolts in a crisscross pattern in at least two steps.

4. Install the transmission assembly (see page 14-243).

ATF Cooler Cleaning

Special Tools Required
- ATF cooler cleaner GHTTTCF6H
- Magnetic nonbypass spin-on filter GTHGNBP2

These special tools are available through the Honda Tool and Equipment Program 888-424-6857.

Before installing an overhauled or remanufactured automatic transmission, you must thoroughly clean the ATF cooler to prevent system contamination. Failure to do so could cause a repeat automatic transmission failure.

The cleaning procedure involves heated ATF-Z1 delivered under high pressure (100 psi). Check the security of all hoses and connections. Always wear safety glasses or a face shield, along with gloves and protective clothing. If you get ATF in your eyes or on your skin, rinse with water immediately.

⚠ WARNING

- Improper use of the ATF cooler cleaner can result in burns and other serious injuries.
- Always wear eye protection and protective clothing, and follow this procedure.

1. Check the fluid in the cooler cleaner tank. (The fluid level should be 4.5 inches from the top of the filler neck.) Adjust the level if needed; do not overfill. Use only Honda ATF-Z1; do not use any additives.

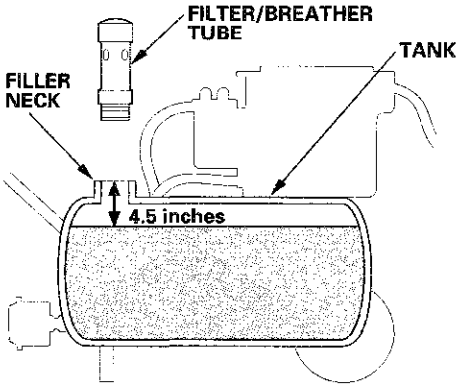

2. Plug the cooler cleaner into a 110 V grounded electrical outlet.

NOTICE
Make sure the outlet has no other appliances (light fixtures, drop lights, extension cords) plugged into it. Also, never plug the cooler cleaner into an extension cord or drop light; you could damage the unit.

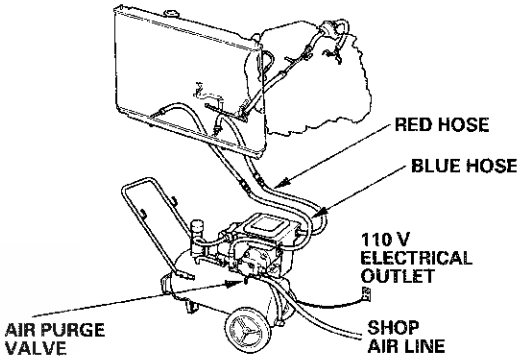

3. Flip the HEAT toggle switch to ON; the green indicator above the toggle switch comes on. Wait 1 hour for the cooler cleaner to reach its operating temperature. (The cooler cleaner is ready to use when the temperature gauge reads 140 °F to 150 °F.)

   NOTE: If the red indicator above the HEAT toggle switch comes on, the fluid level in the tank is too low for the tank heater to work (see step 1 of this procedure).

4. Select the appropriate pair of fittings, and attach them to the radiator, to the hoses, or to the banjo bolts for flow through the ATF cooler cleaner.

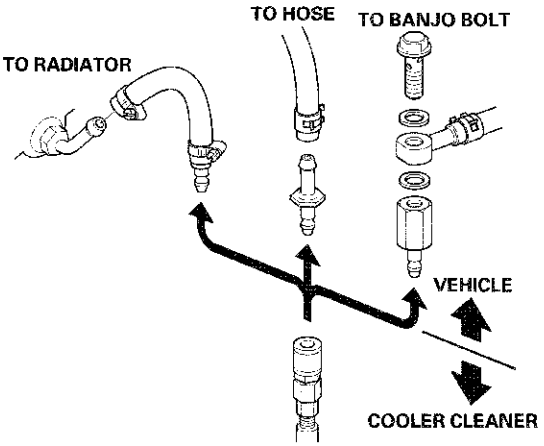

5. Connect the red hose to the cooler outlet line (the line that normally goes to the external filter on the transmission).

6. Connect the blue hose to the cooler inlet line.

7. Connect a shop air hose (regulated to 100 to 125 psi) to the air purge valve.

NOTICE
The quick-connect fitting has a one-way check valve to keep ATF from entering your shop's air system. Do not remove or replace the fitting. Attach the coupler provided with the cooler cleaner to your shop air line if your coupler is not compatible.

8. Flip the MOTOR toggle switch to ON; the green indicator above the toggle switch comes on. Let the pump run for 5 minutes. While the pump is running, open and close the air purge valve periodically to cause agitation and improve the cleaning process. Always open the valve slowly. At the end of the 5-minute cleaning period, leave the air purge valve open.

   NOTE: While the pump is running with the air purge valve open, it is normal to see vapor coming from the filler/breather tube vents.

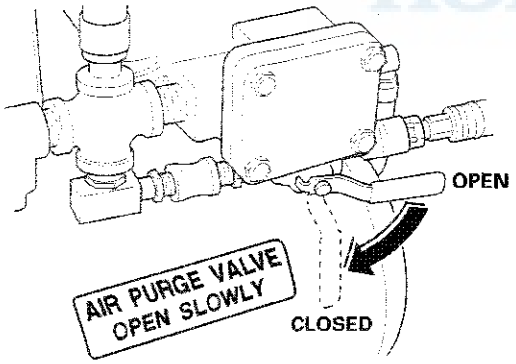

9. With the air purge valve open, flip the MOTOR toggle switch to OFF; the green indicator goes off. Leave the air purge valve open for at least 15 seconds to purge the lines and hoses of residual ATF, then close the valve.

10. Disconnect the red and blue hoses from the ATF cooler. Now connect the red hose to the cooler inlet line.

11. Now connect the blue hose to the cooler outlet line.

12. Flip the MOTOR toggle switch to ON, and let the pump run for 5 minutes. While the pump is running, open and close the air purge valve periodically. Always open the valve slowly. At the end of the 5-minute cleaning period, leave the air purge valve open.

    NOTE: While the pump is running with the air purge valve open, it is normal to see vapor coming from the filler/breather tube vents.

13. With the air purge valve open, flip the MOTOR toggle switch to OFF. Leave the air purge valve open for at least 15 seconds to purge the lines and hoses of residual ATF, then close the valve.

14. Disconnect the red and blue hoses from the ATF cooler lines.

15. Connect the red and blue hoses to each other.

16. Disconnect the shop air from the air purge valve. Disconnect and stow the coupler if used.

17. Disconnect and stow the fittings from the ATF cooler inlet and outlet lines.

18. Unplug the cooler cleaner from the 110 V outlet.

Tool Maintenance

Follow these instructions to keep the ATF cooler cleaner working properly:

- Replace the two magnetic nonbypass spin-on filters after every 20 hours of use. Based on the hour-meter, or when you notice a restriction in the ATF flow.
- Check the level and the condition of the fluid in the tank before each use.
- Replace the ATF in the tank when it looks dark or dirty.

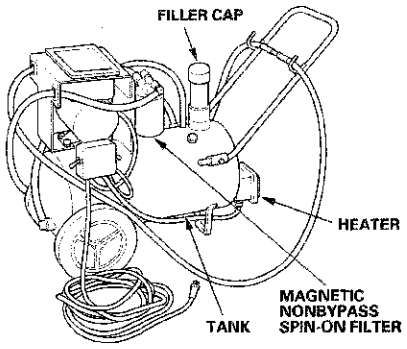

ATF Cooler Hose Replacement

Exploded View

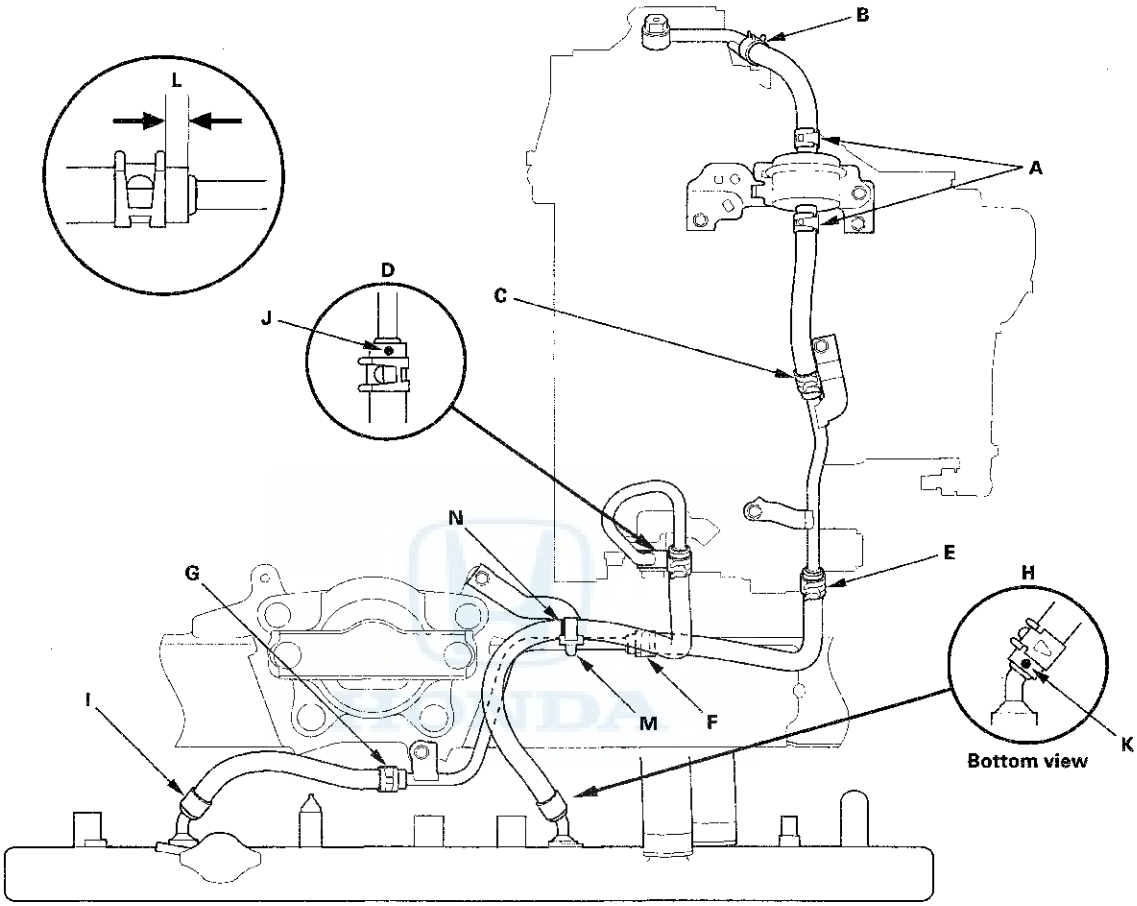

NOTE: When installing the hose clamps, make sure not to interfere to the surrounding parts.

1. Install the ATF cooler hoses over the ATF cooler lines with the clips at appropriate points in reference to the following list. Align the pink paint mark (J) to the upside, and the white paint mark (K) to the downside.

Point	Distance from Hose End to Clip (L)	Hose End Contact Point
A	6—8 mm (0.24—0.31 in.)	ATF Filter
B	6—8 mm (0.24—0.31 in.)	Bulge
C		
D		
E		
F		
G		
H	2—4 mm (0.08—0.16 in.)	Bulge
I		

2. Secure the ATF cooler hose with the clamp (M) at the pink paint line (N).

3. Refill the transmission with ATF to the proper level (see page 14-230).

ATF Filter Replacement

NOTE: The ATF filter is not a scheduled maintenance item. Replace the filter only if it is leaking, or contaminated, or when the transmission is being overhauled or replaced with a remanufactured unit.

1. Raise the vehicle on a lift, or apply the parking brake, block the rear wheels, and raise the front of the vehicle. Make sure it is securely supported.

2. Remove the splash shield.

3. Remove the drain plug (A), and drain the transmission fluid (ATF).

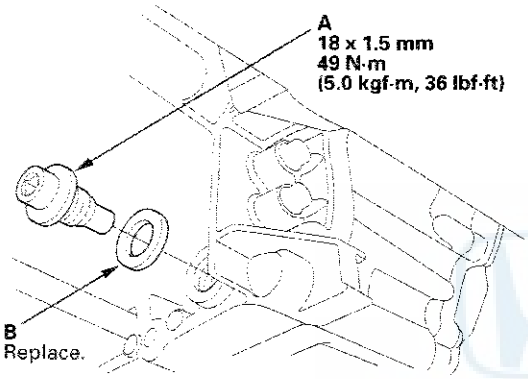

4. Reinstall the drain plug with a new sealing washer (B).

5. Disconnect the ATF cooler hoses (A) from the ATF filter (B).

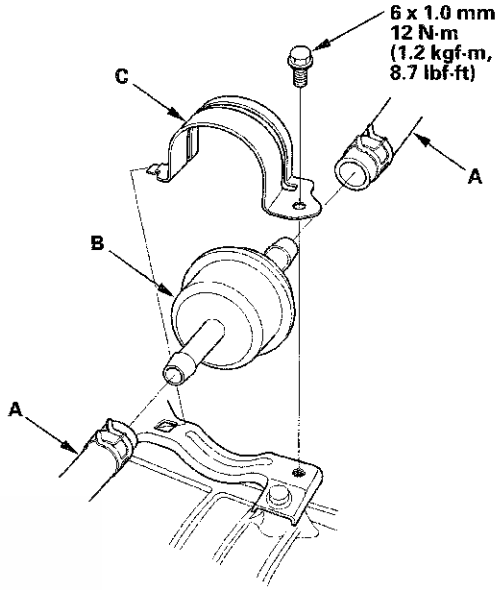

6. Remove the ATF filter holder (C), and remove the ATF filter.

7. Install a new ATF filter, and secure it with its holder and bolt.

8. Connect the ATF cooler hoses to the ATF filter, and secure the hoses with the clips (see page 14-260).

9. Install the splash shield.

10. Refill the transmission with ATF (see step 4 on page 14-231).

Shift Lever Removal

1. Remove the center console (see page 20-148).
2. Move the shift lever to R.
3. Remove the nut securing the shift cable end.

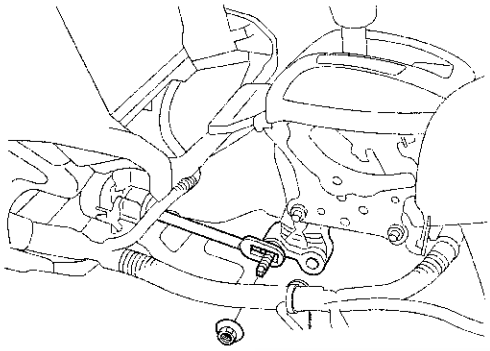

4. Unlock the retainer (A).

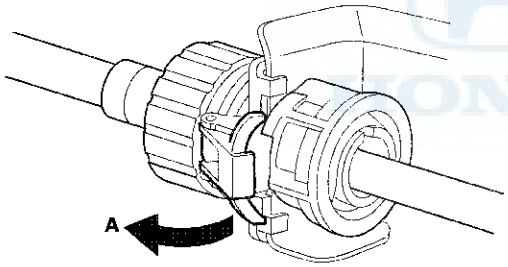

5. Rotate the socket holder retainer (A) counterclockwise (B) until it stops, and push the retainer lock (C) into the socket holder retainer to lock the retainer.

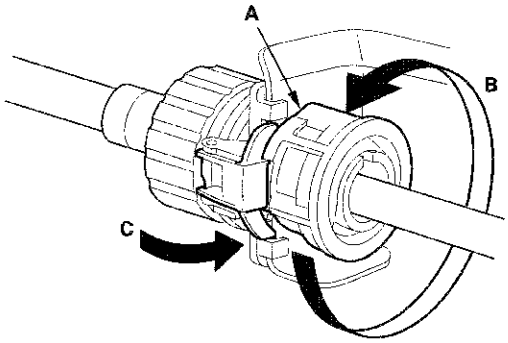

6. Slide (A) the socket holder (B) to remove the shift cable (C) from the shift cable bracket (D). Do not remove the shift cable by pulling the shift cable guide (E).

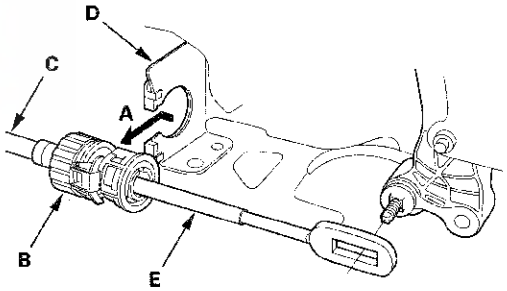

7. Disconnect the shift lock solenoid connector (A) and the park pin switch/A/T gear position indicator panel light connector (B).

Type A Shift Lever

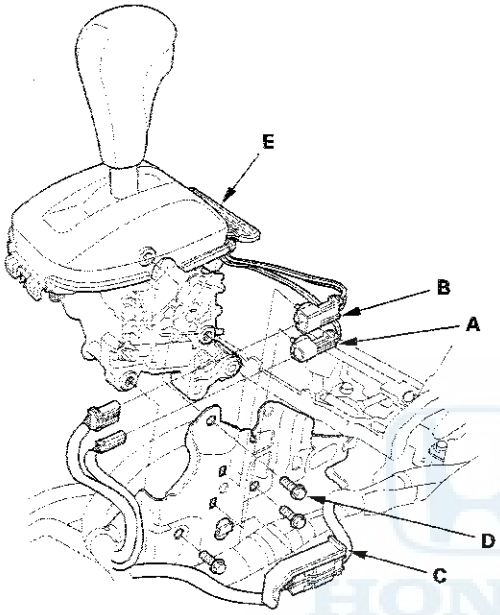

Type B Shift Lever

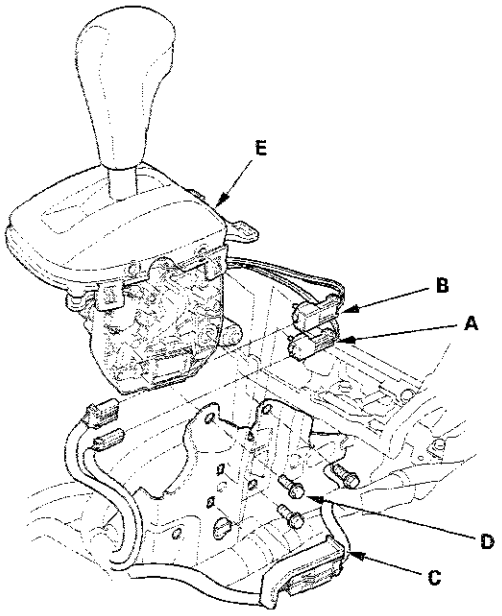

8. Remove the shift lock solenoid connector, the park pin switch/A/T gear position indicator panel light connector, and the harness cover (C) from the shift lever bracket base.

9. Remove the shift lever mounting bolts (D), then remove the shift lever assembly (E).

Shift Lever Installation

1. Install the shift lever assembly (A).

Type A Shift Lever

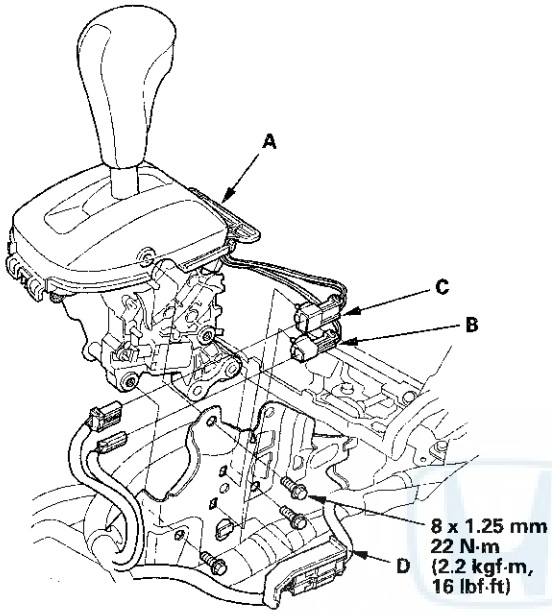

Type B Shift Lever

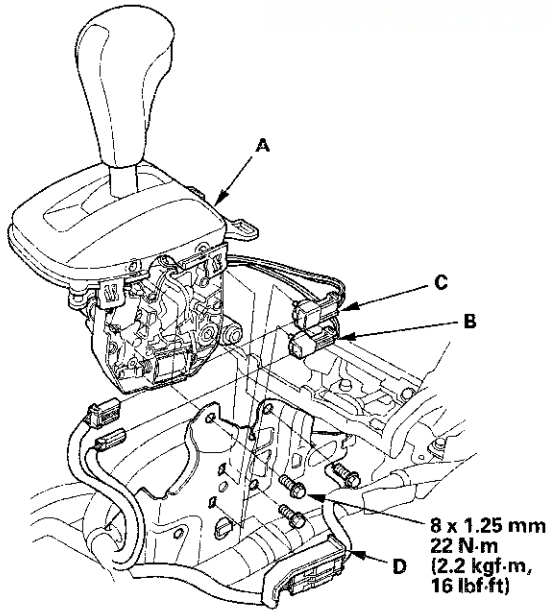

2. Connect the shift lock solenoid connector (B) and the park pin switch/A/T gear position indicator panel light connector (C), and install the harness cover (D) on the shift lever bracket base.

3. Push the shift cable (A) until it stops, then release it. Pull the shift cable back one step so that the shift position is in R. Do not hold the shift cable guide (B) to adjust the shift cable.

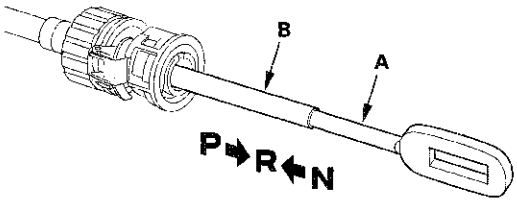

4. Turn the ignition switch to ON (II), and check that the R position indicator comes on.

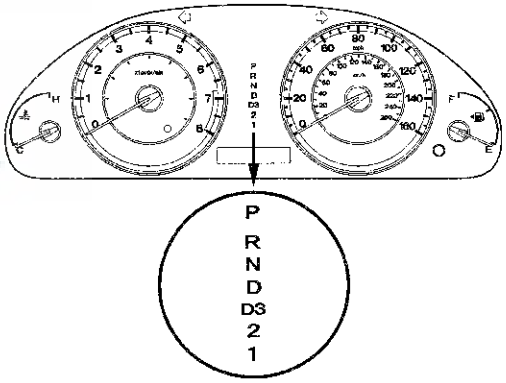

5. Turn the ignition switch to LOCK (0).

6. Place the shift lever in R, then insert a 6.0 mm (0.24 in.) pin (A) into the positioning hole (B) on the shift lever, through the positioning hole on the shift lever, and into the positioning hole on the bracket. Use only a 6.0 mm (0.24 in.) pin with no burrs.

Type A Shift Lever

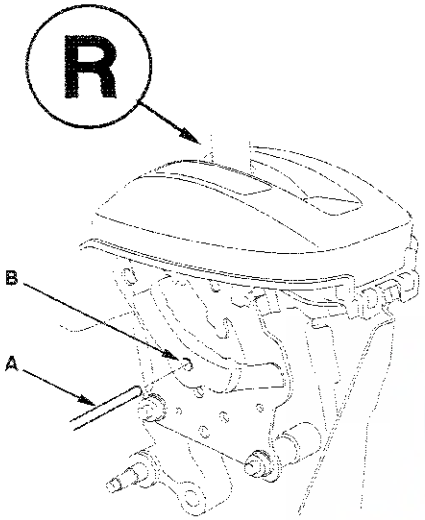

Type B Shift Lever

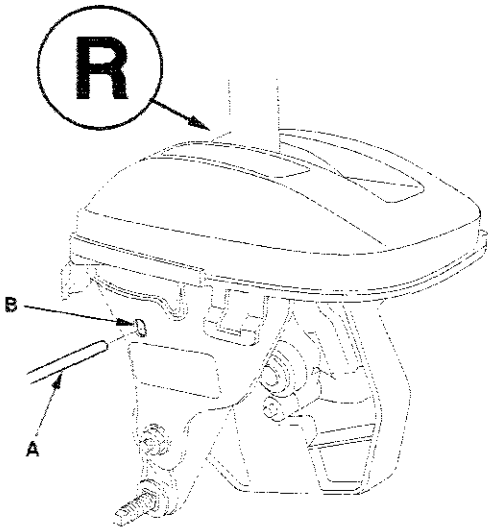

7. Align the clearance (A) between the socket holder (B) and the socket holder retainer (C) with the opening (D) in the shift cable bracket (E), then slide the holder into the bracket while installing the shift cable end (F) over the mounting stud (G) by aligning its square hole (H) with the square fitting (I) at the bottom of the stud. Do not install the shift cable by holding the shift cable guide (J).

NOTE: When the socket holder is installed in the shift cable bracket, the retainer lock is unhinged and releases the holder retainer lock, then the holder retainer returns under spring force to secure the shift cable.

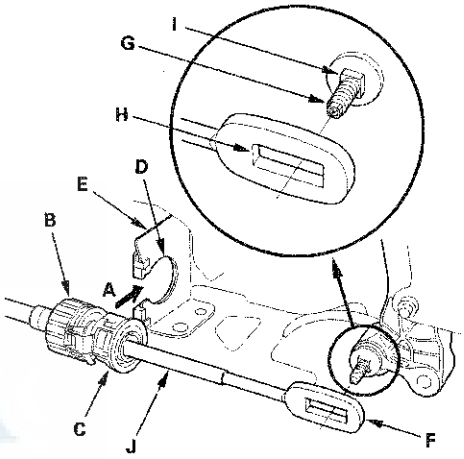

8. Push the retainer lock (A) fully to lock the socket holder retainer (B), and make sure that the retainer lock fits into the hinged-joint (C). If the retainer lock does not fit with the edge of the hinged-joint, rotate the holder retainer counterclockwise while pushing the retainer lock until it locks.

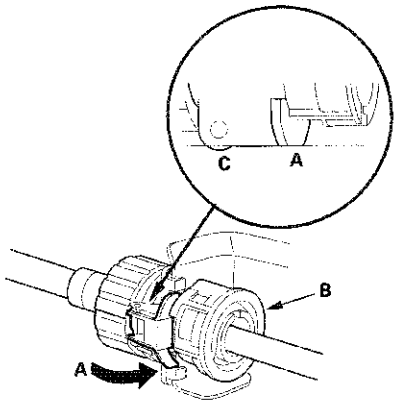

(cont'd)

Shift Lever Installation (cont'd)

9. Check that the shift cable end (A) is properly installed on the mounting stud (B).

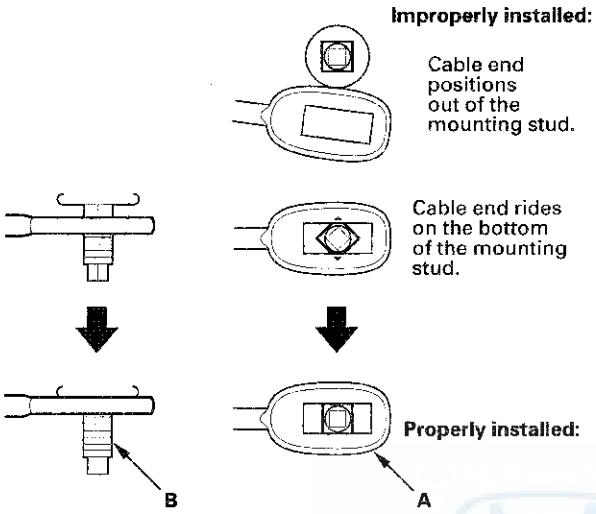

10. If improperly installed, remove the shift cable from the shift lever bracket base, and reinstall the shift cable. Do not install the shift cable end on the mounting stud while the shift cable is on the shift lever bracket base.

11. Install and tighten the nut on the shift cable end.

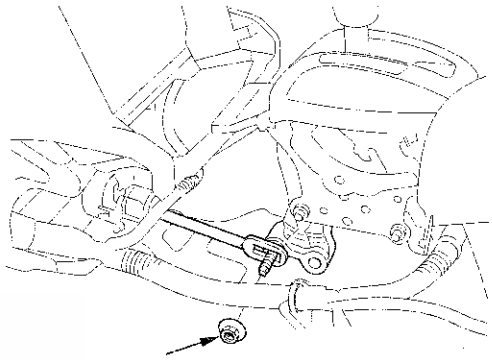

12. Remove the 6.0 mm (0.24 in.) pin that was installed to hold the shift lever.

13. Turn the ignition switch to ON (II). Move the shift lever to each position, and check that the A/T gear position indicator follows the transmission range switch.

14. Shift the shift lever to P, and check that the shift lock works properly. Push the shift lock release, and check that the shift lever releases, and also check that the shift lever locks when it is shifted back to P.

15. Reinstall the center console (see page 20-148).

Shift Lever Disassembly/Reassembly

Type A Shift Lever

NOTE: Make sure not to get any silicone grease on the terminal part of the connectors and switches, especially if you have silicone grease on your hands of gloves.

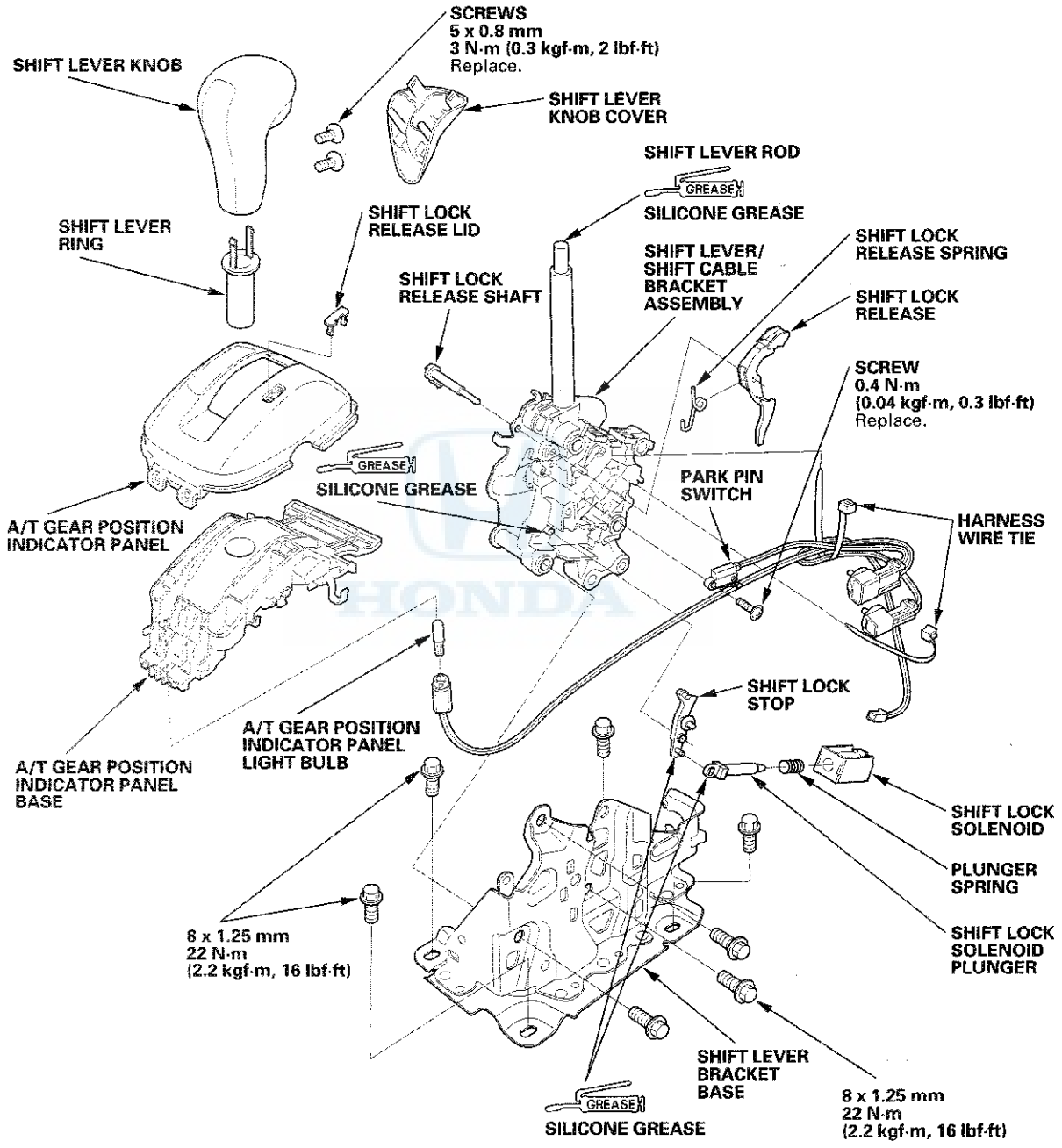

(cont'd)

Shift Lever Disassembly/Reassembly (cont'd)

Type B Shift Lever

NOTE: Make sure not to get any silicone grease on the terminal part of the connectors and switches, especially if you have silicone grease on your hands of gloves.

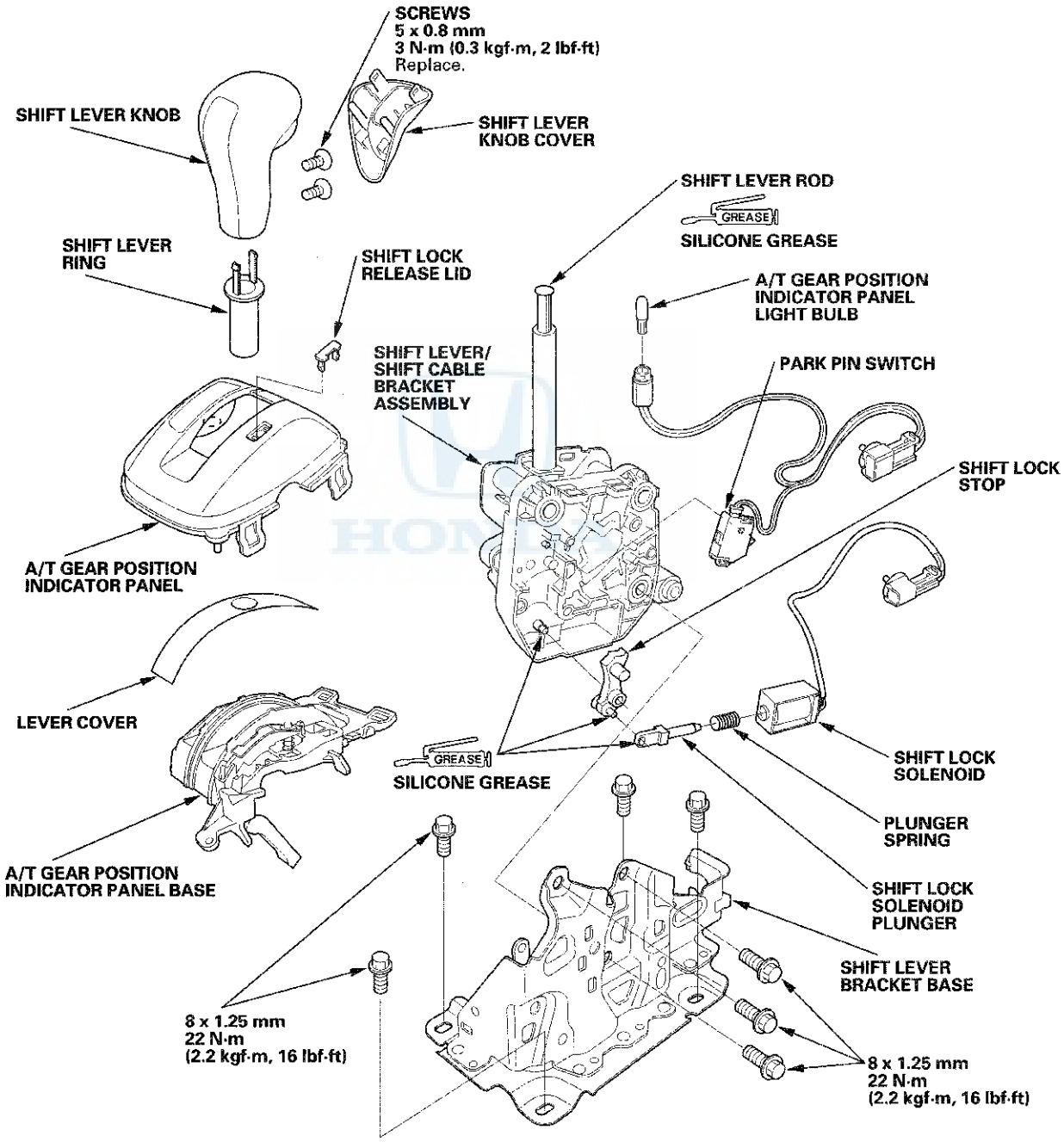

Shift Cable Replacement

1. Raise the vehicle on a lift, or apply the parking brake, block the rear wheels, and raise the front of the vehicle. Make sure it is securely supported.

2. Remove the center console (see page 20-148).

3. Move the shift lever to R.

4. Remove the nut securing the shift cable end.

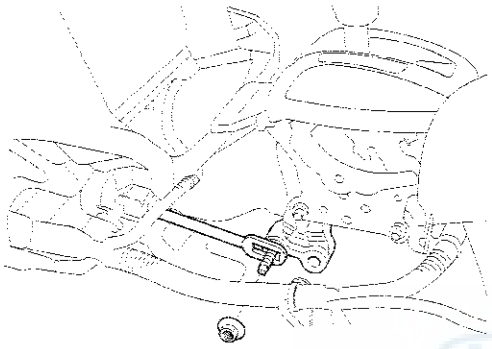

5. Unlock the retainer (A).

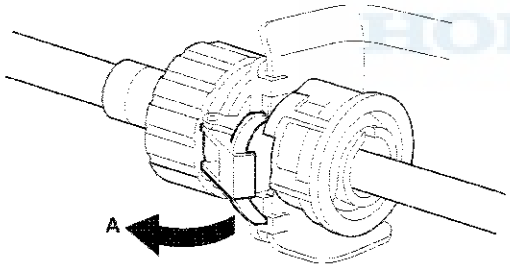

6. Rotate the socket holder retainer (A) counterclockwise (B) until it stops, and push the retainer lock (C) into the retainer to lock the retainer.

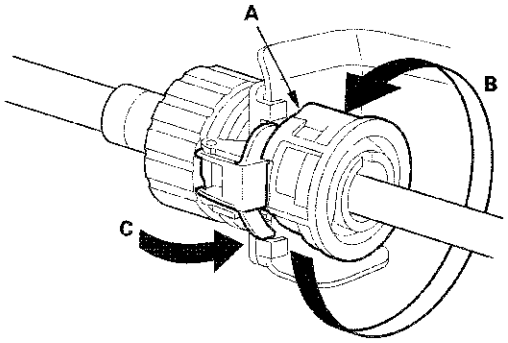

7. Slide (A) the socket holder (B) to remove the shift cable (C) from the shift cable bracket (D). Do not remove the shift cable by pulling the shift cable guide (E).

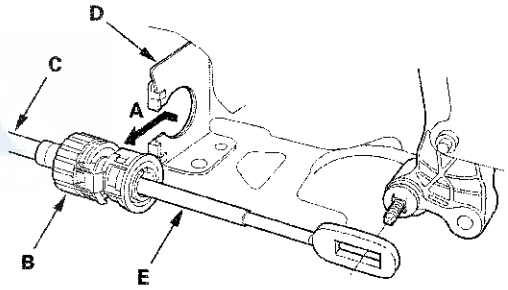

(cont'd)

Shift Cable Replacement (cont'd)

8. VIN begins with JHM: Remove the shift cable cover (A).

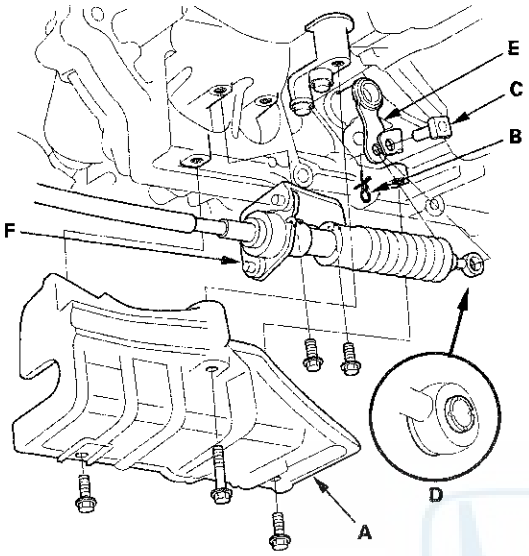

9. VIN begins with JHM: Remove the spring clip (B) and the control pin (C), and separate the shift cable end (D) from the control lever (E). Remove the two bolts securing the shift cable bracket (F).

10. VIN begins with IHG: Remove the shift cable cover (A), and remove the two bolts securing the shift cable bracket (B).

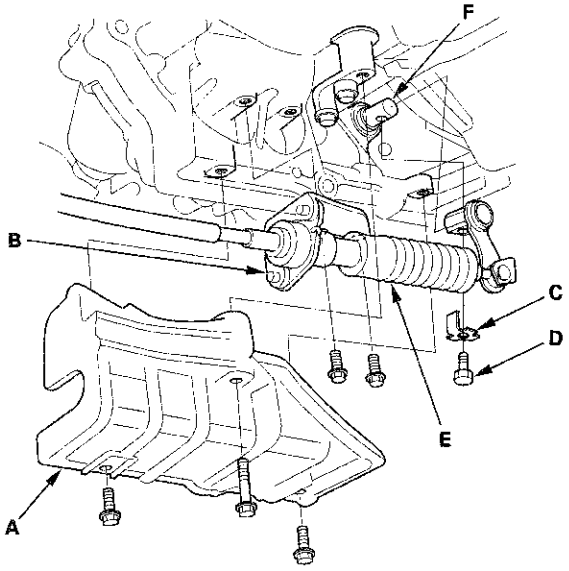

11. VIN begins with IHG: Pry up the lock tab of the lock washer (C), and remove the lock bolt (D) and the lock washer, then separate the shift cable (E) from the control shaft (F).

12. Remove the heat shield.

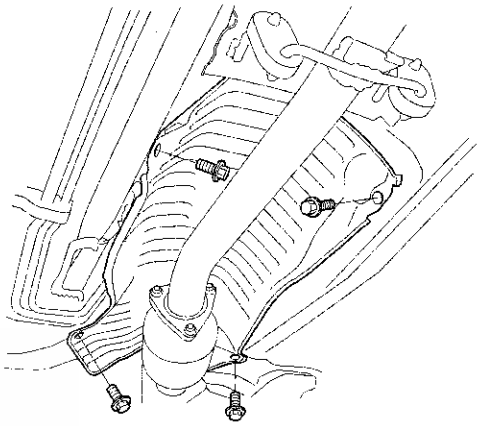

13. Remove the bolts securing the shift cable bracket (A).

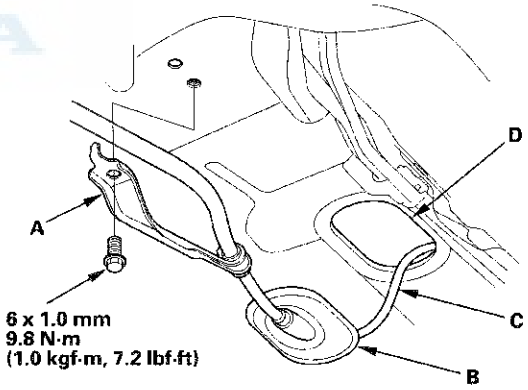

14. Remove the shift cable grommet (B), and pull out the shift cable (C).

15. Insert a new shift cable through the grommet hole (D), and install the grommet in its hole. Do not bend the shift cable excessively.

16. Secure the shift cable grommet.

17. Install the shift cable bracket.

18. VIN begins with JHM: Apply molybdenum grease to the hole in the bushing (A) in the shift cable end (B). Attach the shift cable end to the control lever (C), then insert the control pin (D) into the control lever hole through the shift cable end, and secure the control pin with the spring clip (E). Do not bend the shift cable excessively.

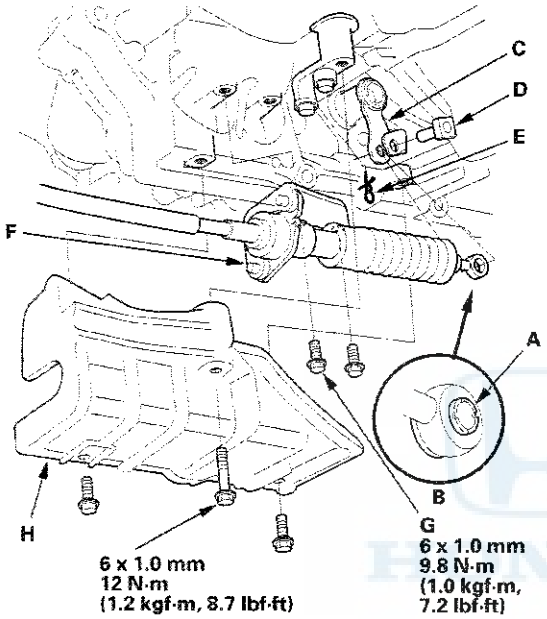

19. VIN begins with JHM: Install the shift cable bracket (F) with the bolts (G).

20. VIN begins with JHM: Install the shift cable cover (H).

21. VIN begins with IHG: Install the control lever (A) over the selector control shaft (B). Secure the control lever with a new lock washer (C) and the lock bolt (D), then bend the lock tab of the lock washer against the bolt head. Do not bend the shift cable excessively.

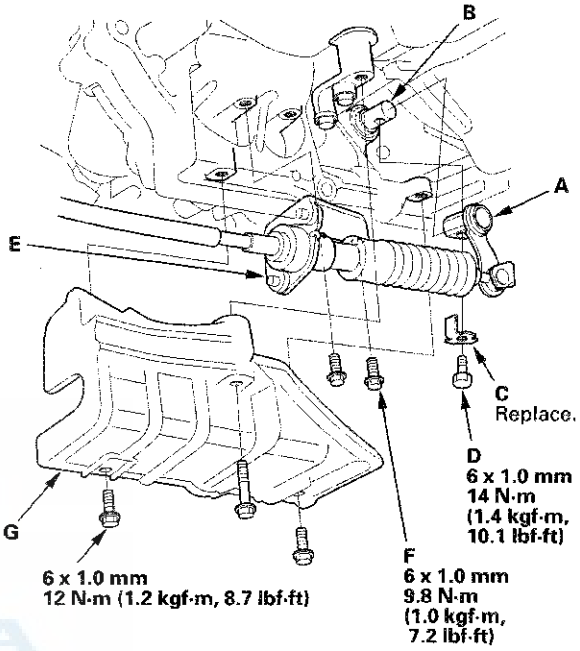

22. VIN begins with IHG: Install the shift cable bracket (E) with the bolts (F).

23. VIN begins with IHG: Install the shift cable cover (G).

24. Install the shift cable on the shift lever, and adjust the shift cable (see page 14-272).

25. Install the center console (see page 20-148).

Shift Cable Adjustment

1. Remove the center console (see page 20-148).
2. Move the shift lever to R.
3. Remove the nut securing the shift cable end.

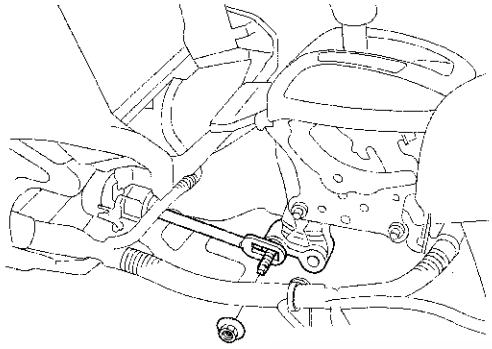

4. Unlock the retainer (A).

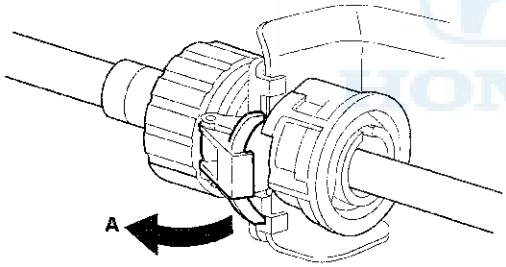

5. Rotate the socket holder retainer (A) counterclockwise (B) until it stops, and push the retainer lock (C) into the retainer to lock the retainer.

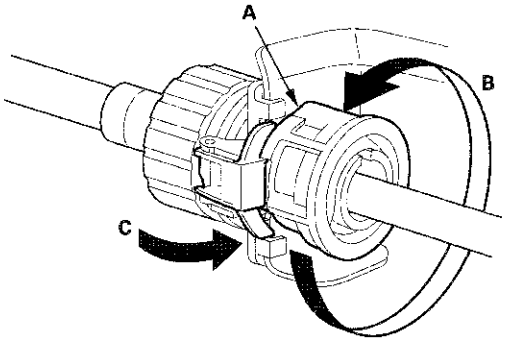

6. Slide (A) the socket holder (B) to remove the shift cable (C) from the shift cable bracket (D). Do not remove the shift cable by pulling the shift cable guide (E).

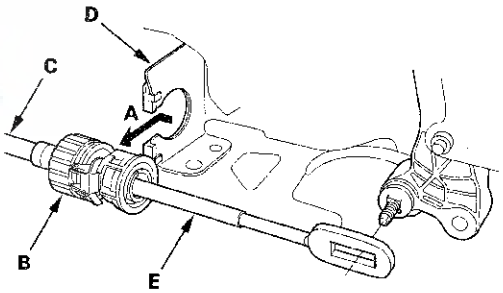

7. Push the shift cable (A) until it stops, then release it. Pull the shift cable back one step so that the shift position is in R. Do not hold the shift cable guide (B) to adjust the shift cable.

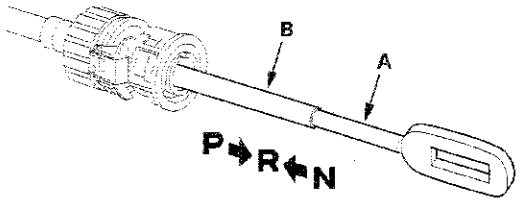

8. Turn the ignition switch to ON (II), and check that the R position indicator comes on.

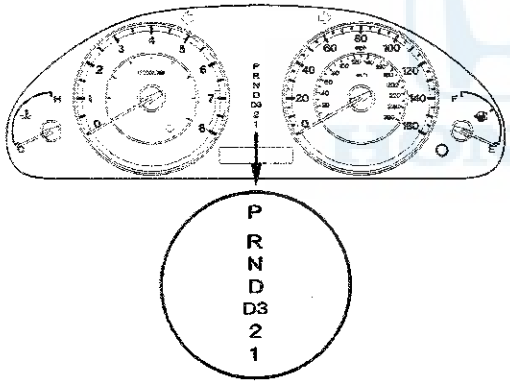

9. Turn the ignition switch to LOCK (0).

10. Place the shift lever in R, then insert a 6.0 mm (0.24 in.) pin (A) into the positioning hole (B) on the shift lever, through the positioning hole on the shift lever, and into the positioning hole on the bracket. Use only a 6.0 mm (0.24 in.) pin with no burrs.

Type A Shift Lever

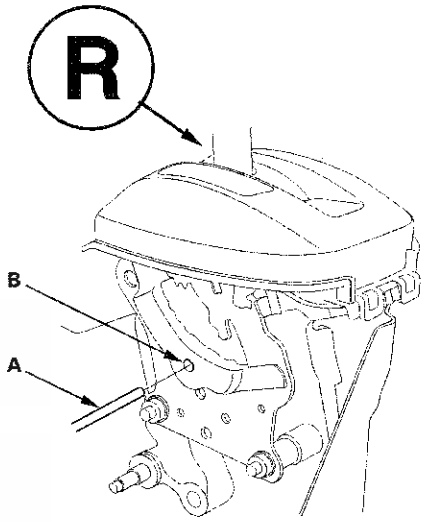

Type B Shift Lever

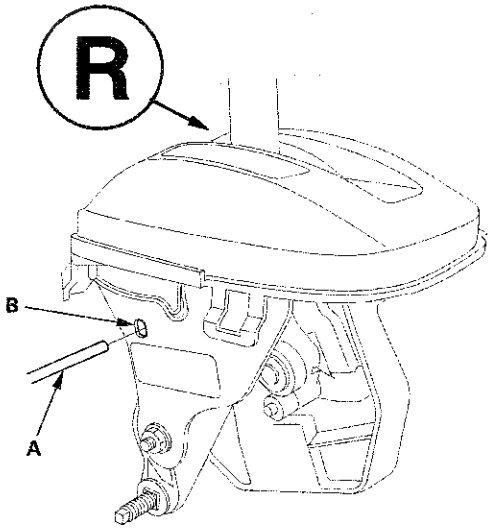

(cont'd)

Shift Cable Adjustment (cont'd)

11. Check that the shift lever is secured in R.

12. Unlock the retainer (A).

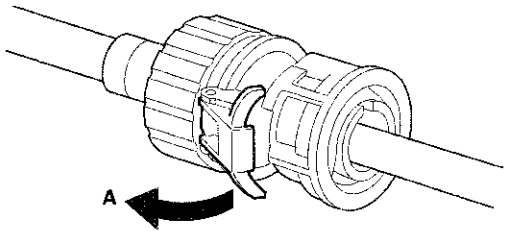

13. Rotate the socket holder retainer (A) counterclockwise (B) until it stops to create clearance (C) between the socket holder (D) and the holder retainer, and push in the retainer (E) to lock it.

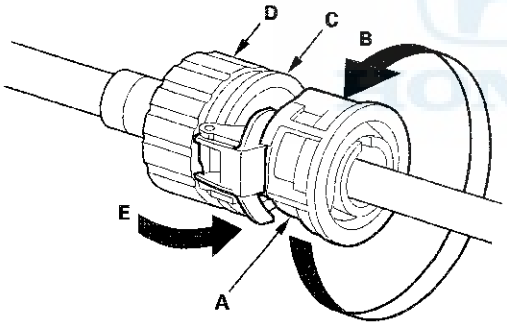

14. Align the clearance (A) between the socket holder (B) and the socket holder retainer (C) with the opening (D) in the shift cable bracket (E), then slide the holder into the bracket while installing the shift cable end (F) over the mounting stud (G) by aligning its square hole (H) with the square fitting (I) at the bottom of the stud. Do not install the shift cable by holding the shift cable guide (J).

NOTE: When the socket holder is installed in the shift cable bracket, the retainer lock is unhinged and releases the holder retainer lock, then the holder retainer returns under spring force to secure the shift cable.

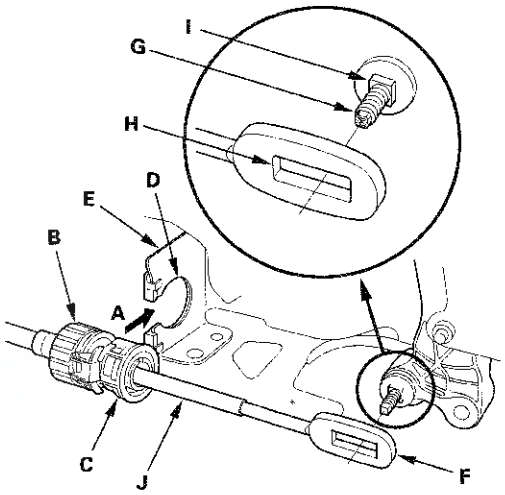

15. Push the retainer lock (A) fully to lock the socket holder retainer (B), and make sure that the retainer lock fits into the hinged-joint (C). If the retainer lock does not fit with the edge of the hinged-joint, rotate the holder retainer counterclockwise while pushing the retainer lock until it locks.

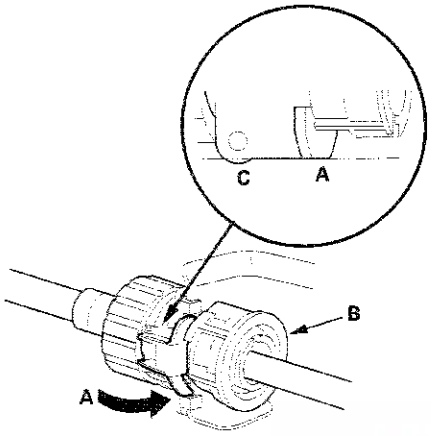

16. Check that the shift cable end is properly installed on the mounting stud.

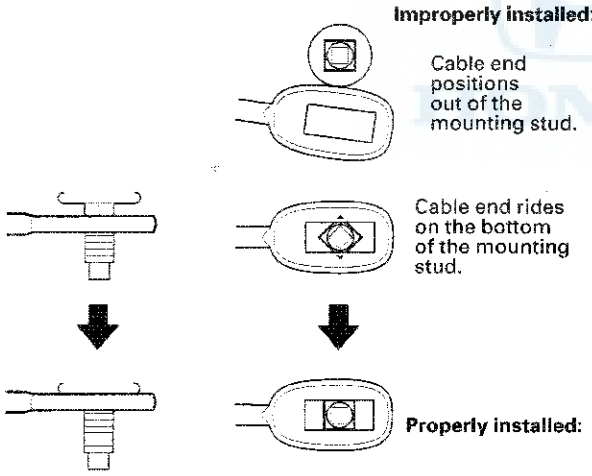

17. If the cable end is out of position on the mounting stud, remove the shift cable from the bracket, and reinstall the shift cable. Do not install the shift cable end on the mounting stud while the shift cable is on the bracket.
If the cable end rides on the bottom of the mounting stud, rotate the stud and align the square fitting with the hole.

18. Install and tighten the nut on the shift cable end.

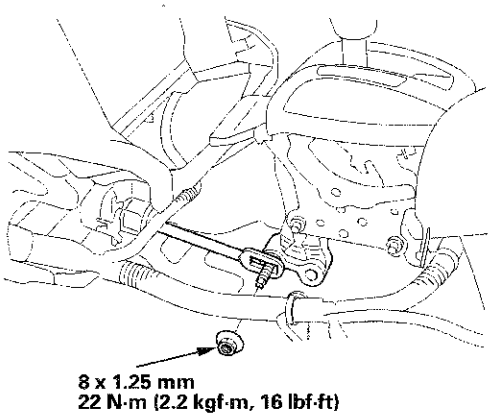

19. Remove the 6.0 mm (0.24 in.) pin that was installed to hold the shift lever.

20. Turn the ignition switch to ON (II). Move the shift lever to each position, and check that the A/T gear position indicator follows the transmission range switch.

21. Shift the shift lever to P, and check that the shift lock works properly. Push the shift lock release, and check that the shift lever releases, and also check that the shift lever locks when it is shifted back to P.

22. Install the center console (see page 20-148).

A/T Gear Position Indicator

Component Location Index

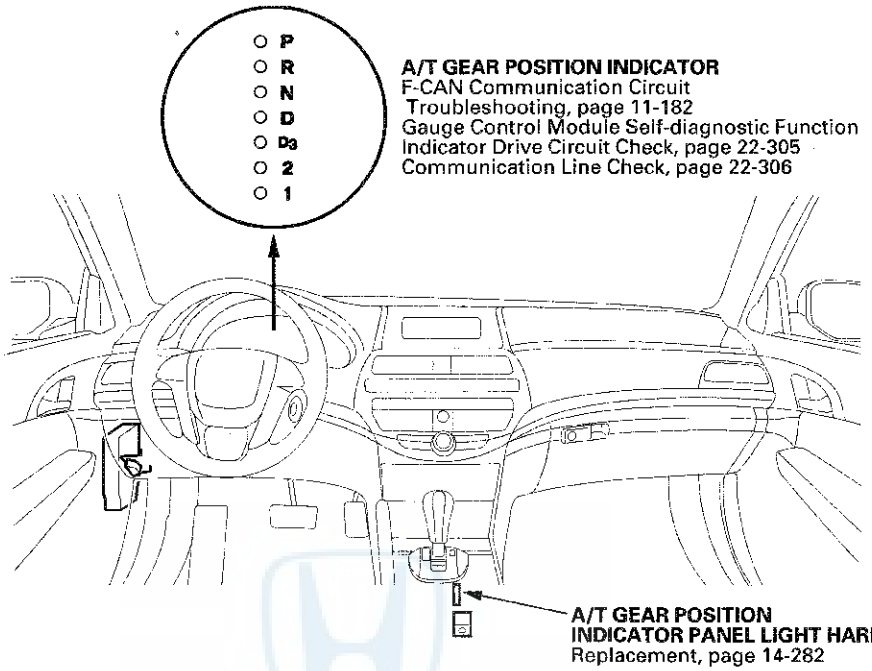

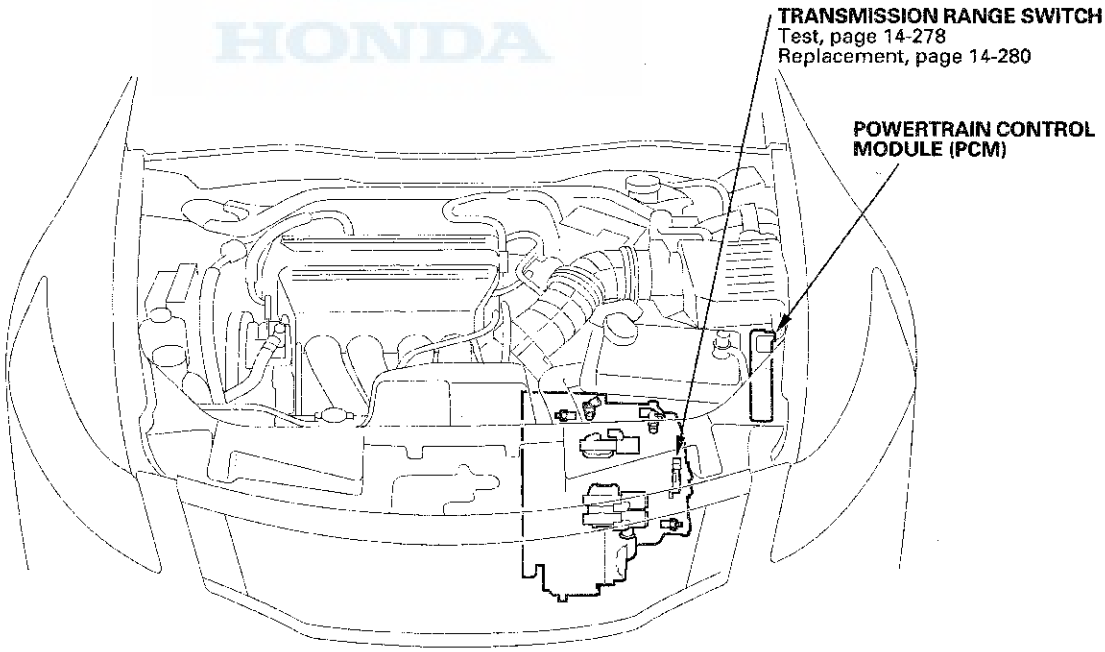

Circuit Diagram

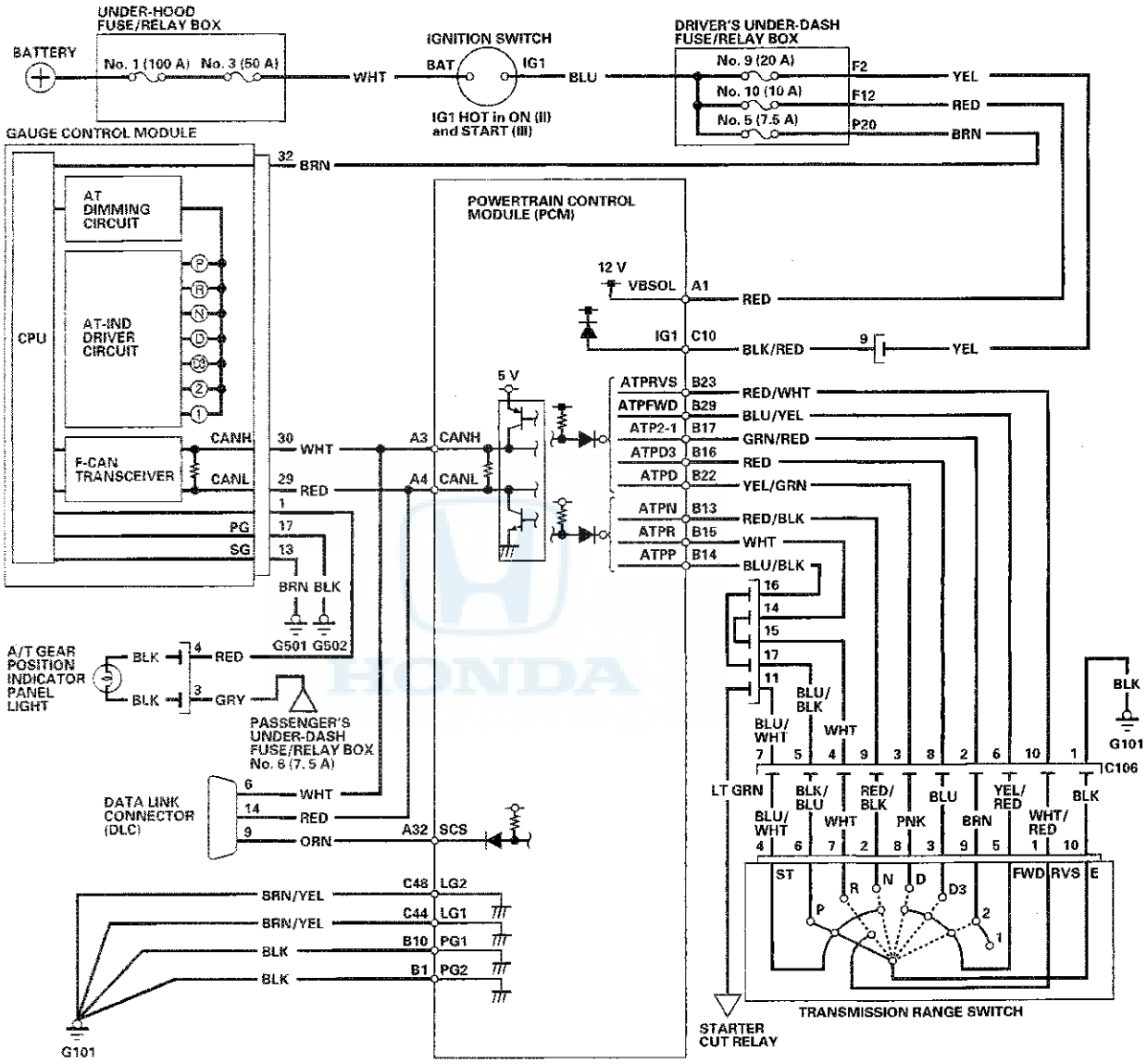

PCM Connector Terminal Locations

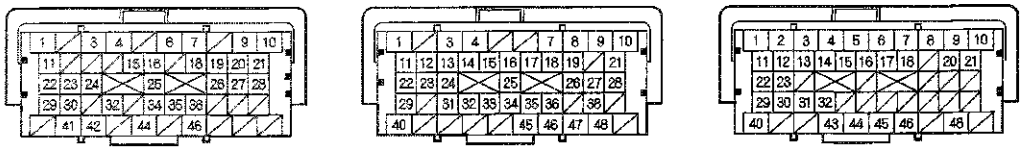

A □ (49P) B △ (49P) C ○ (49P)

Terminal side of female terminals

Transmission Range Switch Test

1. Raise the vehicle on a lift, or apply the parking brake, block the rear wheels, and raise the front of the vehicle. Make sure it is securely supported.

2. Remove the left front wheel.

3. Disconnect the transmission range switch subharness connector (A), then remove the connector from the connector bracket (B).

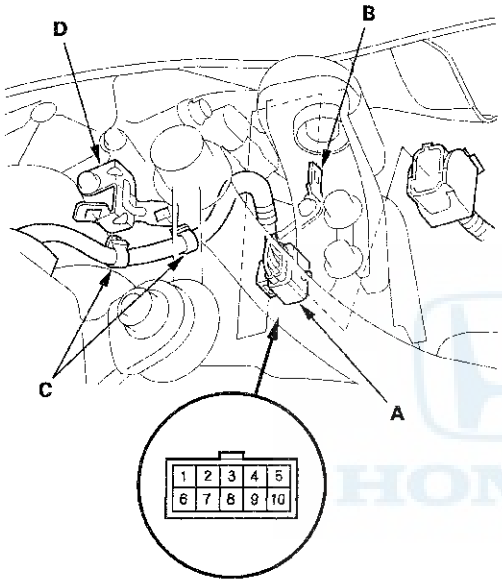

4. Remove the harness clamps (C) from the clamp bracket (D).

5. Check for continuity between the terminals at the harness connector. There should be continuity between the terminals in the following table for each switch position.

Transmission Range Switch Subharness Connector

Position/Connector Terminal/Signal Connections										
	1	2	3	4	5	6	7	8	9	10
	GND	ATP 2-1	D	R	P	ATP FWD	ATP NP	D3	N	ATP RVS
P	○				○		○			
R	○			○						○
N	○						○		○	
D	○		○			○				
D3	○					○		○		
2	○	○				○				
1	○	○								

6. Transmission range switch test is completed if the test results are OK.
If there is no continuity between any terminals, go to step 7.

7. Remove the transmission range switch cover.

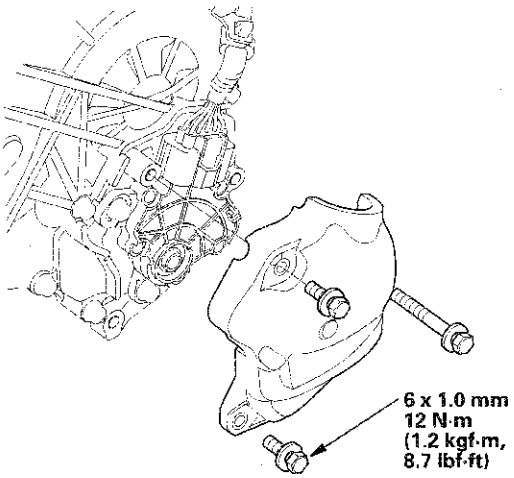

8. Disconnect the transmission range switch connector.

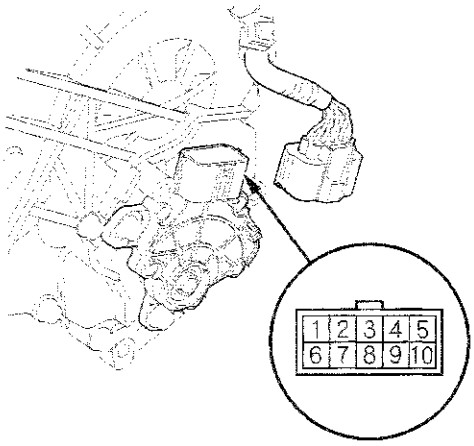

9. Check for continuity between the terminals at the transmission range switch connector. There should be continuity between the terminals in the following table for each transmission range switch position.

Transmission Range Switch Connector

Position/Connector Terminal/Signal Connections										
	1	2	3	4	5	6	7	8	9	10
	ATP RVS	N	D3	ATP NP	ATP FWD	P	R	D	ATP 2-1	GND
P				○		○				○
R	○						○			○
N		○		○						○
D					○			○		○
D3			○		○					○
2					○				○	○
1									○	○

10. If the transmission range switch continuity check is OK, replace the faulty transmission range switch subharness.
If there is no continuity between any terminals, go to step 11.

11. Remove the transmission range switch, and check the end of the selector control shaft (A).

Selector Control Shaft Specifications:
Width (B): 6.1—6.2 mm (0.240—0.244 in.)
End Gap (C): 1.8—2.0 mm (0.07—0.08 in.)

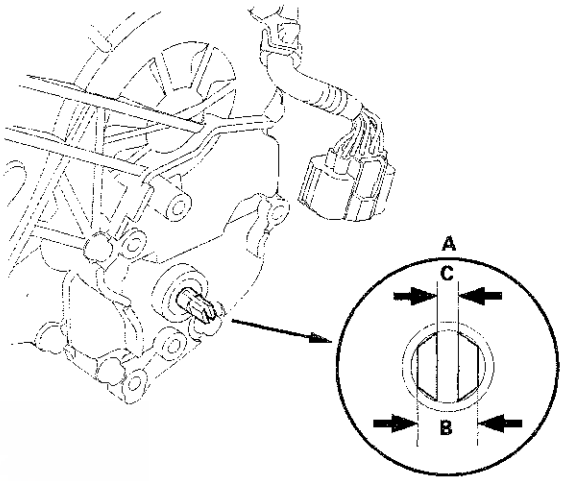

12. If the measurements of the selector control shaft end are within the standard, replace the transmission range switch (see page 14-280). If the measurements are out of the standard, repair the selector control shaft end, and recheck the transmission range switch continuity.

13. Check the connectors for rust, dirt, or oil, and clean or repair if necessary. Then connect the connector securely.

14. Install the harness clamps to the clamp bracket.

15. Install the transmission range switch cover.

16. Install the left front wheel.

Transmission Range Switch Replacement

1. Raise the vehicle on a lift, or apply the parking brake, block the rear wheels, and raise the front of the vehicle. Make sure it is securely supported.

2. Remove the left front wheel.

3. Move the shift lever to N.

4. Remove the transmission range switch cover.

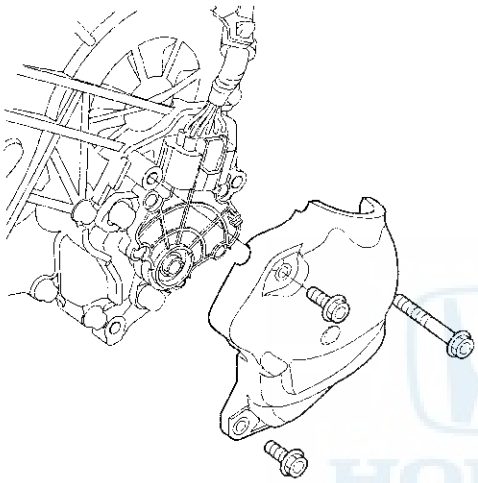

5. Disconnect the transmission range switch connector.

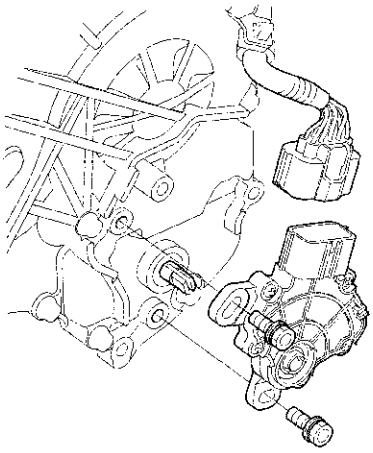

6. Remove the transmission range switch.

7. Make sure the selector control shaft is in the N position. If necessary, move the shift lever from P to N.

   NOTE: Do not use the selector control shaft to adjust the shift position. If the selector control shaft tips are squeezed together it will cause a faulty signal or position due to play between the selector control shaft and the transmission range switch.

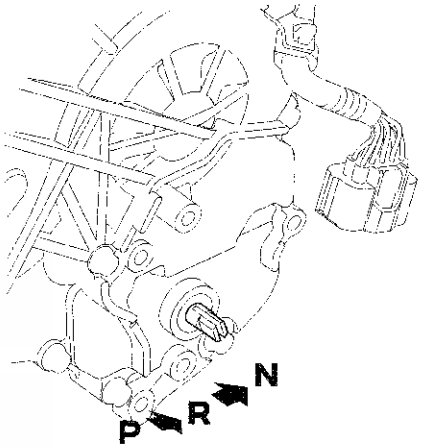

8. Set a new transmission range switch (A) to the N position. Align the cutouts (B) on the rotary-frame with the neutral positioning cutouts (C) on the transmission range switch. Then put a 2.0 mm (0.08 in.) feeler gauge blade (D) in the cutouts to hold the transmission range switch in the N position.

   NOTE: Be sure to use a 2.0 mm (0.08 in.) blade or equivalent to hold the transmission range switch in the N position.

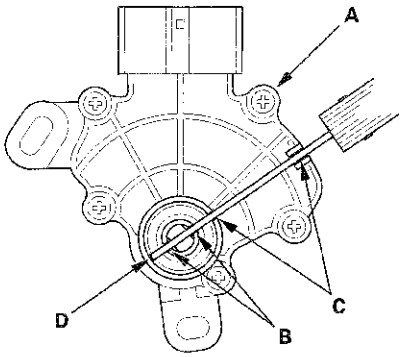

9. Install the transmission range switch (A) gently on the selector control shaft (B) while holding it in the N position with the 2.0 mm (0.08 in.) blade (C).

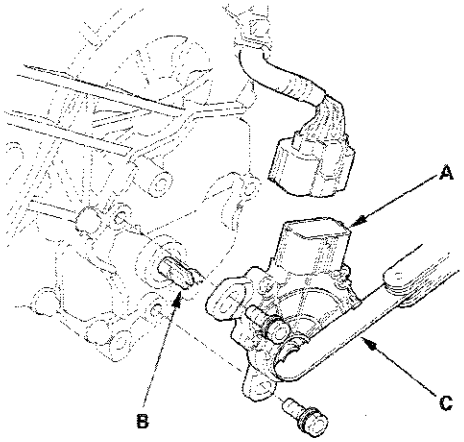

10. Tighten the bolts on the transmission range switch while you continue to hold the N position. Do not move the transmission range switch when tightening the bolts. Then remove the feeler gauge.

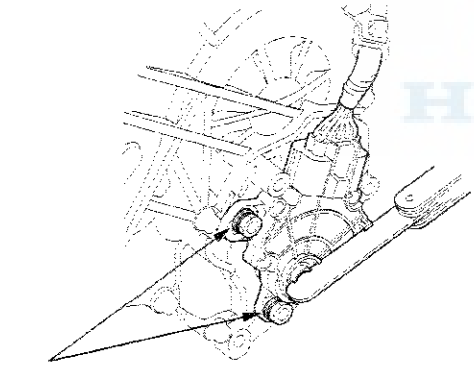

11. Check the connector for rust, dirt, or oil, and clean or repair if necessary. Then connect the transmission range switch connector securely.

12. Turn the ignition switch to ON (II). Move the shift lever through all positions, and check the transmission range switch synchronization with the A/T gear position indicator.

13. Check that the engine will start with the shift lever in P and N, and will not start in any other shift lever position.

14. Check that the back-up lights come on when the shift lever is in R.

15. Allow the front wheels to rotate freely, then start the engine, and check the shift lever operation.

16. Install the transmission range switch cover (A).

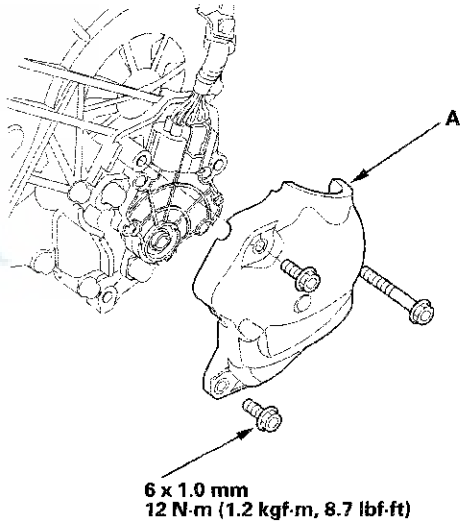

17. Install the left front wheel.

A/T Gear Position Indicator Panel Light Harness Replacement

Type A Shift Lever

NOTE: The A/T gear position indicator panel light harness and the park pin switch are not available separately. Replace the A/T gear position indicator panel light harness and the park pin switch as a set.

1. Remove the center console (see page 20-148).
2. Remove the shift lever assembly (see page 14-262).
3. Wrap the end of a flat-tip screwdriver with tape, pry off the shift lever knob cover locks, and remove the shift lever knob cover (A).

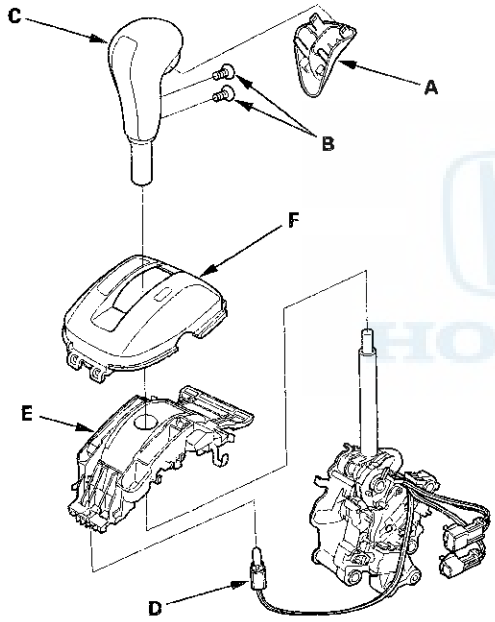

4. Remove the screws (B), and remove the shift lever knob (C) from the shift lever.
5. Remove the A/T gear position indicator panel light socket (D) from the panel base (E).
6. Remove the A/T gear position indicator panel (F), and disassemble the indicator panel and the panel base.
7. Release the lock (A) of the shift lock release, and remove the shift lock release and the release spring (B).

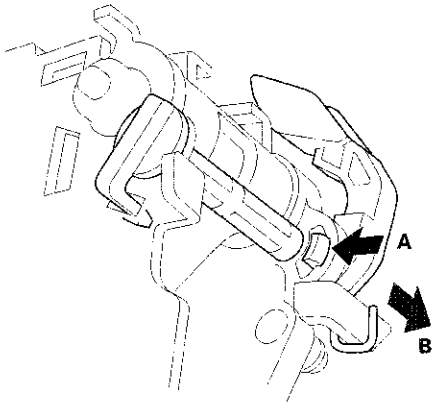

8. Remove the screw (A), the harness wire tie (B), and remove the light bulb (C) from the socket.

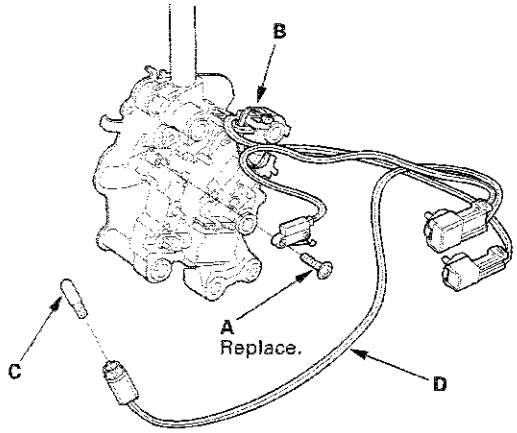

9. Remove the park pin switch/A/T gear position indicator panel light harness (D).

10. Install a new park pin switch, and secure the switch with a new screw.

11. Tie the harnesses of the park pin switch/A/T gear position indicator panel light and the shift lock solenoid at the guide with the harness wire tie.

12. Install the A/T gear position indicator panel light bulb in the socket.

13. Install the shift lock release spring (A) in the shift lock release (B).

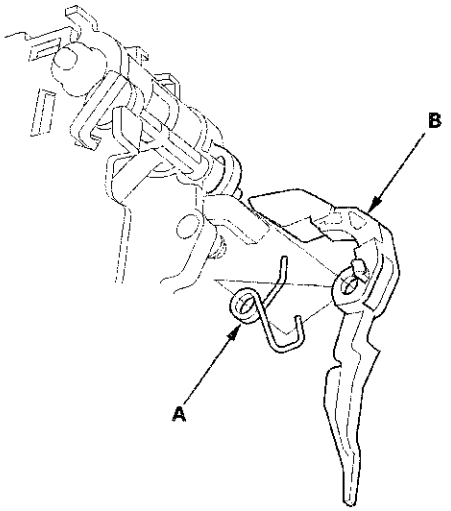

14. Install the shift lock release and the release spring on the release shaft end.

(cont'd)

A/T Gear Position Indicator Panel Light Harness Replacement (cont'd)

15. Make sure that the release spring end (A) is installed in the shift lock release (B), and the hooked end (C) is on the stop (D).

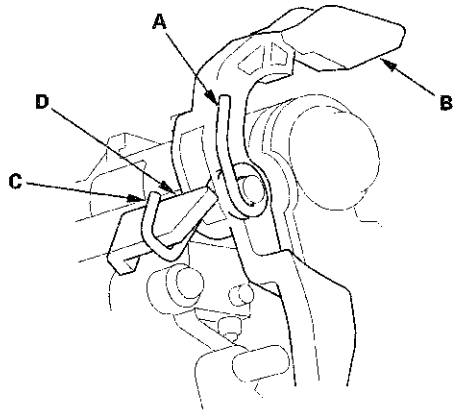

16. Install the A/T gear position indicator panel base (A).

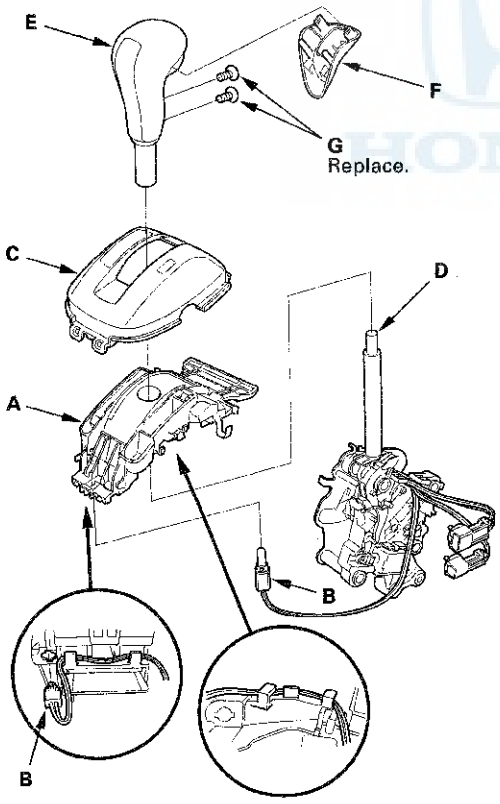

17. Install the A/T gear position indicator panel light socket (B) in the indicator panel base.

18. Route the park pin switch/A/T gear position indicator panel light harnesses. Take the slack out of the harnesses, and secure the harnesses with the harness wire tie at the guide.

19. Install the A/T gear position indicator panel (C).

20. Apply silicone grease to the top (D) of the shift lever rod.

    NOTE: Make sure not to get any silicone grease on the terminal part of the connectors and switches, especially if you have silicone grease on your hands of gloves.

21. Install the shift lever knob (E) over the shift lever.

22. Install the shift lever knob cover (F) on the shift lever knob with new screws (G).

23. Install the shift lever (see page 14-264).

24. Install the center console (see page 20-148).

Type B Shift Lever

NOTE: The A/T gear position indicator panel light harness and the park pin switch are not available separately. Replace the A/T gear position indicator panel light harness and the park pin switch as a set.

1. Remove the center console (see page 20-148).
2. Remove the shift lever assembly (see page 14-262).
3. Wrap the end of a flat-tip screwdriver with tape, pry the shift lever knob cover locks, and remove the shift lever knob cover (A).

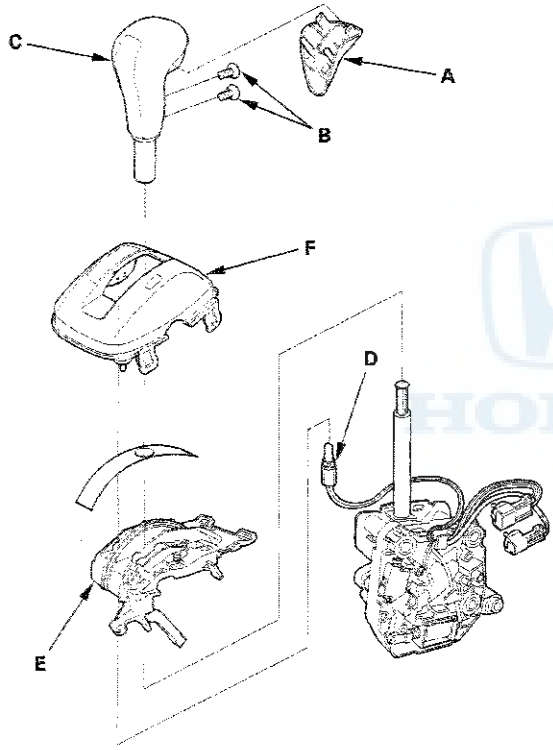

4. Remove the screws (B), and remove the shift lever knob (C) from the shift lever.
5. Remove the A/T gear position indicator panel light socket (D) from the indicator panel base (E).
6. Remove the A/T gear position indicator panel (F), and disassemble the indicator panel and the panel base.
7. Remove the light bulb (A) from the socket.

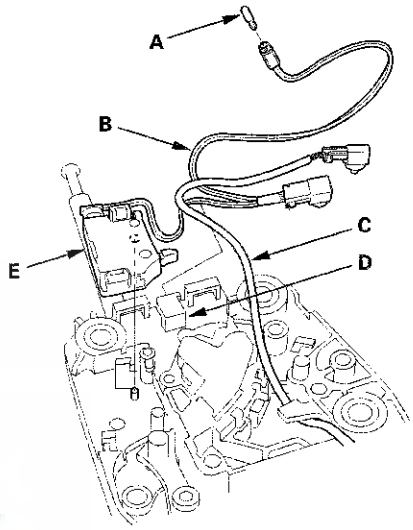

8. Remove the park pin switch/A/T gear position indicator panel light harness (B) and the shift lock solenoid harness (C) from the harness guide (D).
9. Install a new park pin switch (E).
10. Route the park pin switch/A/T gear position indicator panel light harness and the shift lock solenoid harness in the harness guide.
11. Install the A/T gear position indicator panel light bulb in the socket.

(cont'd)

A/T Gear Position Indicator Panel Light Harness Replacement (cont'd)

12. Install the A/T gear position indicator panel base (A).

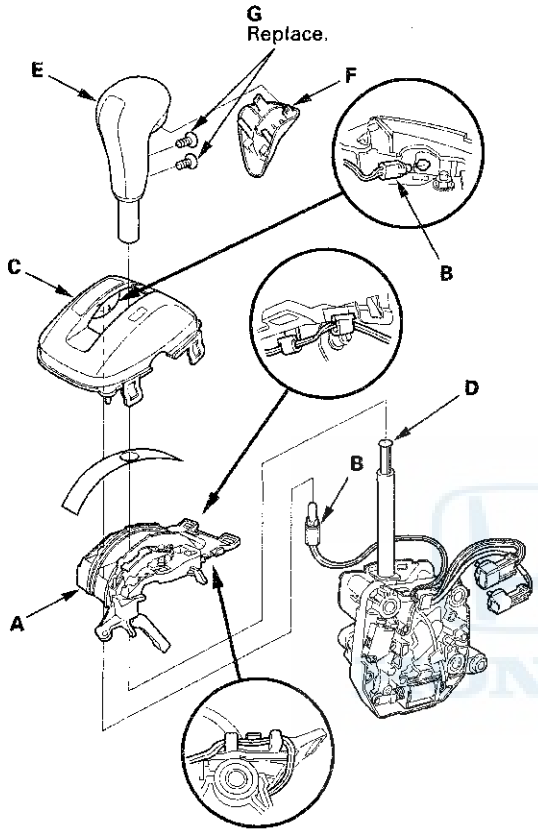

13. Install the A/T gear position indicator panel light socket (B) in the indicator panel base.

14. Route the park pin switch/A/T gear position indicator panel light harnesses. Take the slack out of the harnesses, and secure the harnesses in the guide.

15. Install the A/T gear position indicator panel (C).

16. Apply silicone grease to the top (D) of the shift lever rod.

    NOTE: Make sure not to get any silicone grease on the terminal part of the connectors and switches, especially if you have silicone grease on your hands of gloves.

17. Install the shift lever knob (E) over the shift lever.

18. Install the shift lever knob cover (F) on the shift lever knob with new screws (G).

19. Install the shift lever assembly (see page 14-264).

20. Install the center console (see page 20-148).

Component Location Index

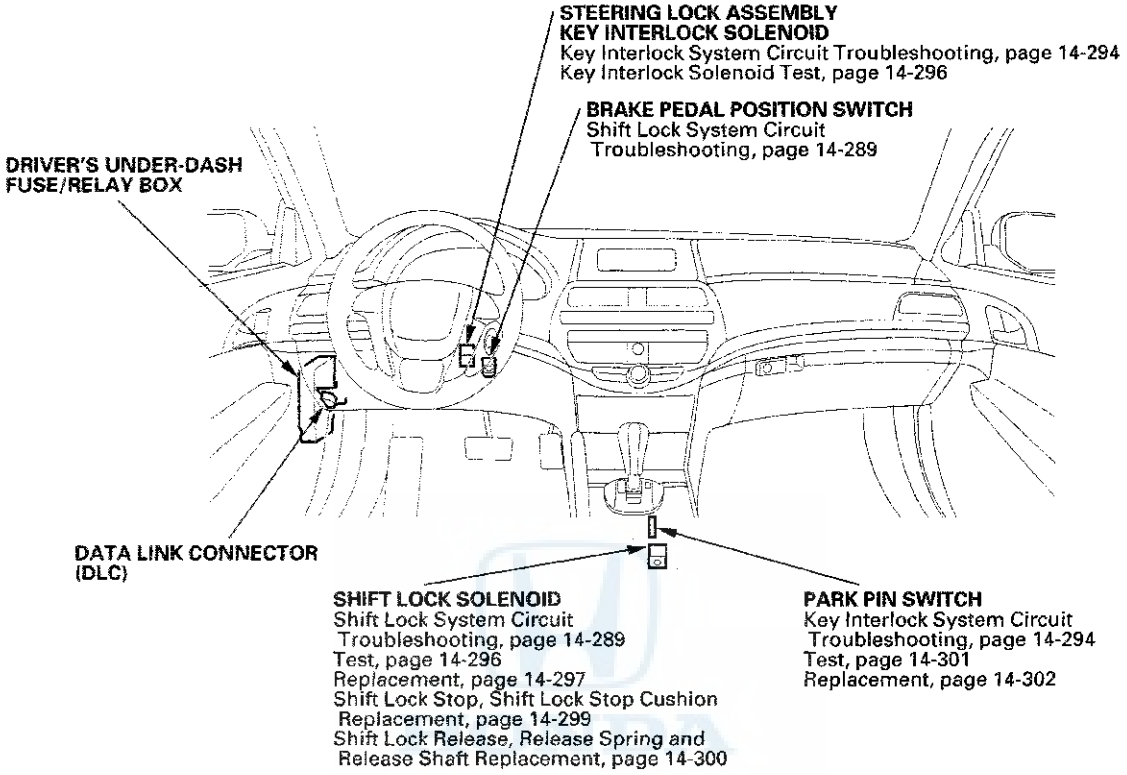

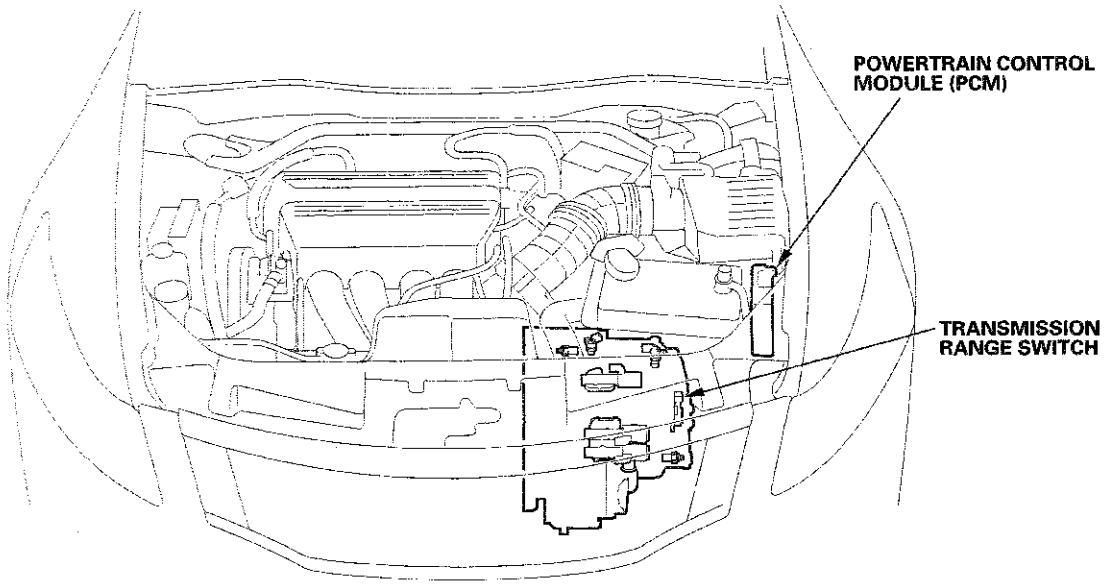

A/T Interlock System

Circuit Diagram

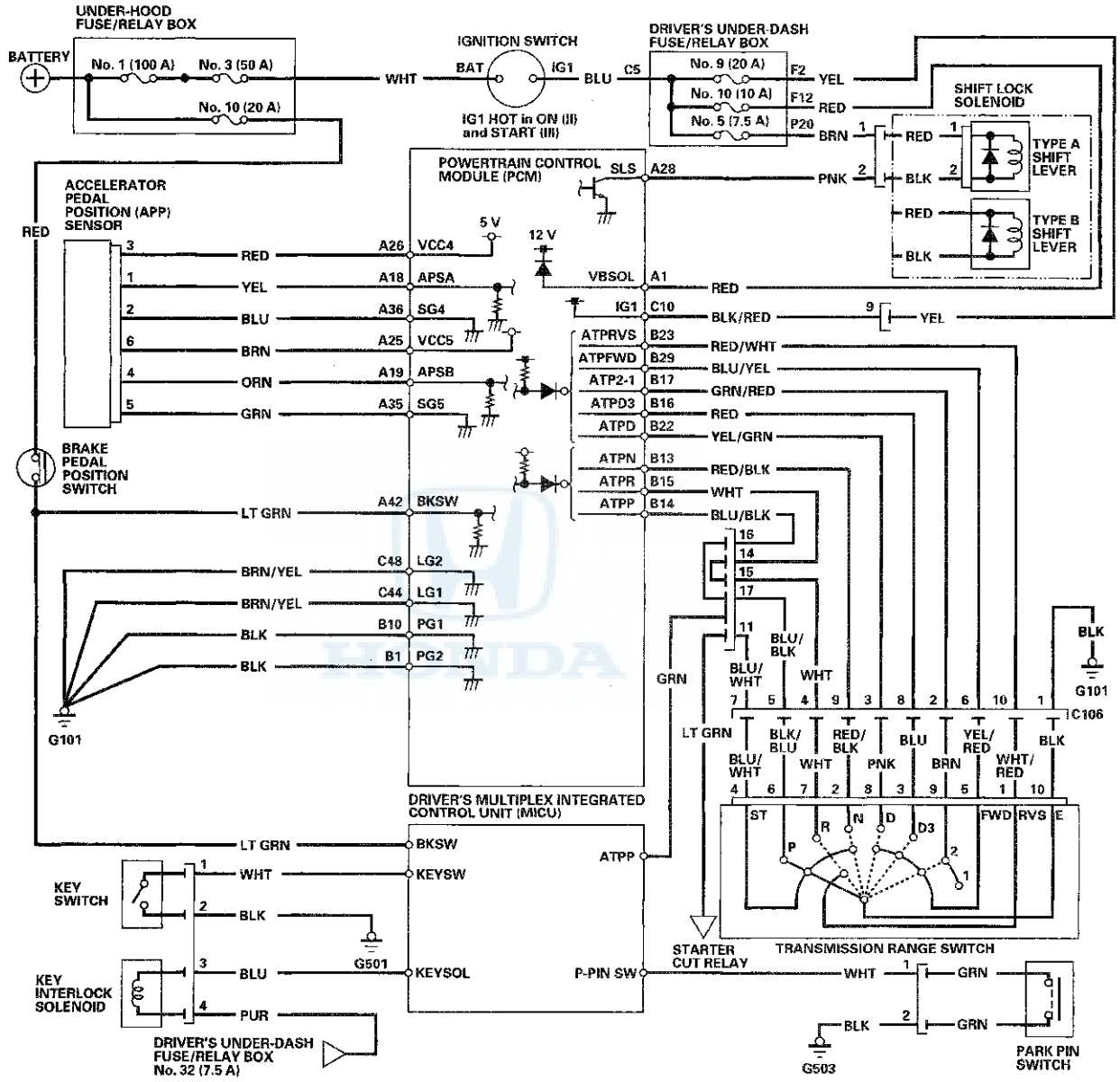

PCM Connector Terminal Locations

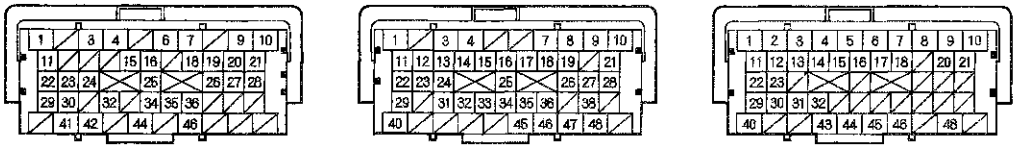

A □ (49P) B △ (49P) C ○ (49P)

Terminal side of female terminals

Shift Lock System Circuit Troubleshooting

1. Connect the HDS to the DLC (A) located under the driver's side of the dashboard.

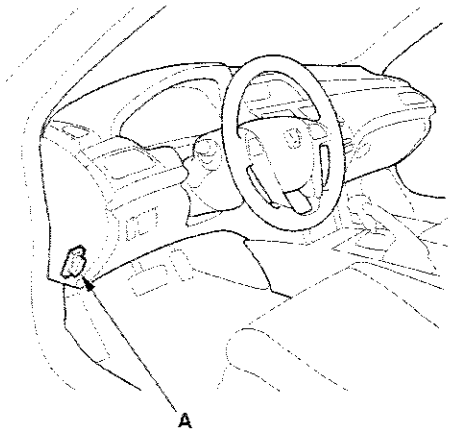

2. Turn the ignition switch to ON (II). Make sure the HDS communicates with the PCM. If it does not, go to the DLC circuit troubleshooting (see page 11-192).

3. Select Shift Lock Solenoid Test in the Miscellaneous Test Menu, and check that the shift lock solenoid operates with the HDS.

   Does the shift lock solenoid work properly?

   YES—Go to step 16.

   NO—Go to step 4.

4. Turn the ignition switch to LOCK (0).

5. Remove the shift lever assembly (see page 14-262).

6. Disconnect the shift lock solenoid connector (see page 14-297).

7. Turn the ignition switch to ON (II).

8. Measure the voltage between shift lock solenoid connector terminal No. 1 and body ground.

SHIFT LOCK SOLENOID CONNECTOR

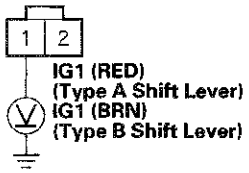

Wire side of female terminals

   Is there battery voltage?

   YES—Go to step 9.

   NO—Check for a blown No. 5 (7.5 A) fuse in the driver's under-dash fuse/relay box. If the fuse is OK, repair open in the wire between the shift lock solenoid connector and the driver's under-dash fuse/relay box. ■

9. Shift the shift lever to P, and press the brake pedal. Do not press the accelerator.

10. Measure the voltage between shift lock solenoid connector terminals No. 1 and No. 2 while pressing the brake pedal.

SHIFT LOCK SOLENOID CONNECTOR

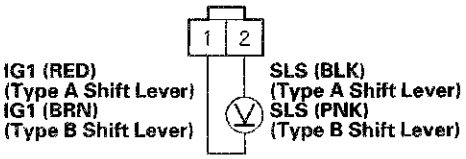

Wire side of female terminals

   Is there battery voltage?

   YES—Go to step 11.

   NO—Go to step 12.

(cont'd)

Shift Lock System Circuit Troubleshooting (cont'd)

11. Release the brake pedal, and measure the voltage between shift lock solenoid connector terminals No. 1 and No. 2. The shift lever must be in P.

SHIFT LOCK SOLENOID CONNECTOR

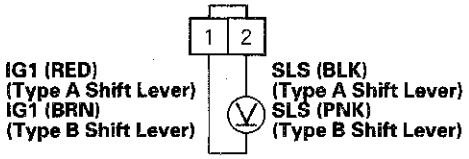

Wire side of female terminals

Is there battery voltage?

YES—Repair short to body ground in the wire between PCM connector terminal A28 and the shift lock solenoid. ■

NO—Check the shift lock mechanism. If the mechanism is OK, replace the shift lock solenoid (see page 14-297). ■

12. Turn the ignition switch to LOCK (0).

13. Jump the SCS line with the HDS.

14. Disconnect PCM connector A (49P).

15. Check for continuity between PCM connector terminal A28 and shift lock solenoid connector terminal No. 2.

SHIFT LOCK SOLENOID CONNECTOR **PCM CONNECTOR A (49P)**

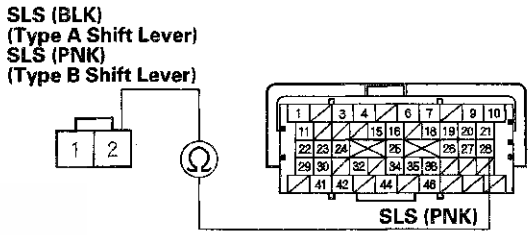

Wire side of female terminals

Terminal side of female terminals

Is there continuity?

YES—Reconnect all connectors. Then update the PCM if it does not have the latest software (see page 11-215), or substitute a known-good PCM (see page 14-8), then recheck. If the symptom goes away with a known-good PCM, replace the original PCM (see page 11-216). ■

NO—Repair open in the wire between PCM connector terminal A28 and the shift lock solenoid connector. ■

16. Monitor the Brake Switch in the Data List with the HDS, and press the brake pedal.

    Is the Brake Switch ON?

    YES—Go to step 22.

    NO—If the brake lights come on, go to step 17. If the brake lights do not work, repair the faulty brake light circuit.

17. Turn the ignition switch to LOCK (0).

18. Jump the SCS line with the HDS.

19. Disconnect PCM connector A (49P).

20. Turn the ignition switch to ON (II).

21. Measure the voltage between PCM connector terminal A42 and body ground when pressing the brake pedal and when the brake pedal is released.

PCM CONNECTOR A (49P)

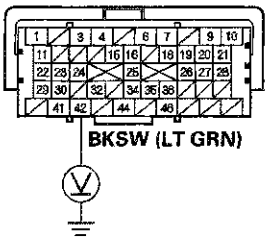

Terminal side of female terminals

Is there battery voltage when pressing the brake pedal, and about 0 V when the pedal is released?

YES—Reconnect all connectors. Then update the PCM if it does not have the latest software (see page 11-215), or substitute a known-good PCM (see page 14-8), then recheck. If the symptom goes away with a known-good PCM, replace the original PCM (see page 11-216).■

NO—Repair open in the wire between PCM connector terminal A42 and the brake pedal position switch.■

(cont'd)

Shift Lock System Circuit Troubleshooting (cont'd)

22. Monitor the A/T P Switch in the Data List with the HDS with the shift lever in P.

    Is the A/T P Switch ON?

    YES—Go to step 34.

    NO—Go to step 23.

23. Turn the ignition switch to LOCK (0).

24. Disconnect the transmission range switch connector.

25. Turn the ignition switch to ON (II).

26. Measure the voltage between transmission range switch connector terminals No. 6 and No. 10.

TRANSMISSION RANGE SWITCH CONNECTOR

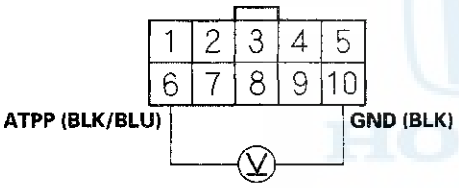

Wire side of female terminals

Is there battery voltage?

YES—Go to step 27.

NO—Go to step 28.

27. Inspect the transmission range switch (see page 14-278).

    Is the switch ON?

    YES—Check for poor connections or loose terminals at the transmission range switch. ■

    NO—Replace the transmission range switch (see page 14-280). ■

28. Turn the ignition switch to LOCK (0).

29. Jump the SCS line with the HDS.

30. Disconnect PCM connector A (49P).

31. Check for continuity between PCM connector terminal B14 and body ground.

PCM CONNECTOR B (49P)

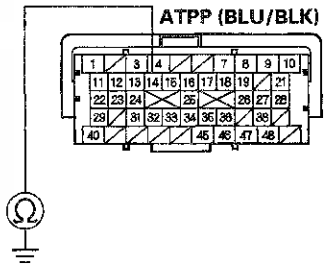

Terminal side of female terminals

Is there continuity?

YES—Repair short to body ground in the wire between PCM connector terminal B14 and the transmission range switch connector. ■

NO—Go to step 32.

32. Check for continuity between PCM connector terminal B14 and transmission range switch connector terminal No. 6.

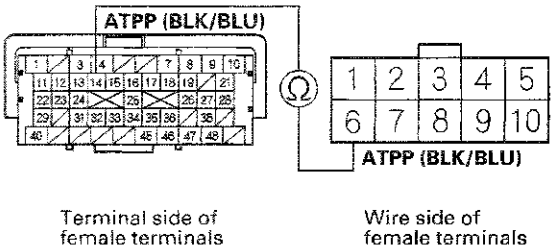

Is there continuity?

YES—Go to step 33.

NO—Repair open in the wire between PCM connector terminal B14 and the transmission range switch connector. ■

33. Check for continuity between transmission range switch connector terminal No. 10 and body ground.

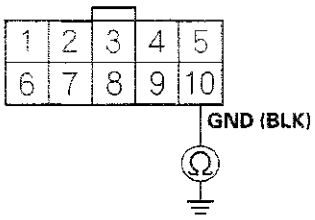

Is there continuity?

YES—Reconnect all connectors. Then update the PCM if it does not have the latest software (see page 11-215), or substitute a known-good PCM (see page 14-8), then recheck. If the symptom goes away with a known-good PCM, replace the original PCM (see page 11-216). ■

NO—Repair open in the wire between transmission range switch connector terminal No. 10 and body ground (G101), or repair poor ground (G101). ■

34. Check the APP SENSOR in the Data List with the HDS. Do not press the accelerator.

Is the accelerator pedal position sensor opening 5 % and above, or the sensor voltage 1.16 V and above?

YES—Check the APP SENSOR (see page 11-258). ■

NO—Reconnect all connectors. Then update the PCM if it does not have the latest software (see page 11-215), or substitute a known-good PCM (see page 14-8), then recheck. If the symptom goes away with a known-good PCM, replace the original PCM (see page 11-216). ■

Key Interlock System Circuit Troubleshooting

SRS components are located in this area. Review the SRS component locations for 4-door (see page 24-19), for 2-door (see page 24-21) and the precautions and procedures (see page 24-23) before doing repair or service.

1. Remove the dashboard lower cover (see page 20-153), and the column cover (see page 20-168).
2. Turn the ignition switch to ACCESSORY (I). The shift lever must be in P.
3. Disconnect the steering lock assembly 6P connector.
4. Check if the ignition switch can be turned to LOCK (0).

   Can the ignition switch be turned to LOCK (0)?

   YES—Go to step 4.

   NO—Replace the ignition key cylinder/steering lock assembly (see page 17-34). ■
5. Make sure the ignition switch is turned to LOCK (0).
6. Move the shift lever out of P.
7. Check for continuity between steering lock assembly 6P connector terminal No. 3 and body ground.

STEERING LOCK ASSEMBLY 6P CONNECTOR

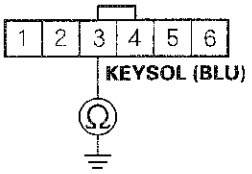

Wire side of female terminals

Is there continuity?

YES—Repair short to body ground in the wire between the key interlock solenoid and the driver's MICU. ■

NO—Go to step 8.

8. Remove the shift lever assembly (see page 14-262).
9. Check for continuity between park pin switch/A/T gear position indicator panel light connector terminal No. 1 and body ground.

PARK PIN SWITCH/ A/T GEAR POSITION INDICATOR PANEL LIGHT CONNECTOR

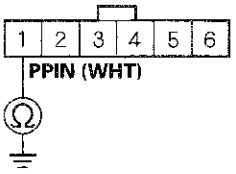

Wire side of female terminals

Is there continuity?

YES—Repair short to body ground in the wire between park pin switch/A/T gear position indicator panel light connector terminal No. 1 and the driver's MICU. ■

NO—Go to step 10.

10. Shift the shift lever to P.

11. Check for continuity between park pin switch/A/T gear position indicator panel light connector terminals No. 1 and No. 2. Do not push the shift lever button.

PARK PIN SWITCH/ A/T GEAR POSITION INDICATOR PANEL LIGHT CONNECTOR

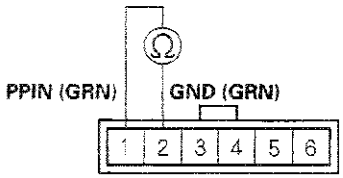

Terminal side of male terminals

Is there continuity?

YES—Replace the park pin switch (see page 14-302). ■

NO—Go to step 12.

12. Disconnect driver's under-dash fuse/relay box connector F (33P).

13. Turn the ignition switch to ON (II).

14. Measure the voltage between driver's under-dash fuse/relay box connector F (33P) terminal No. 4 and body ground.

DRIVER'S UNDER-DASH FUSE/ RELAY BOX CONNECTOR F (33P)

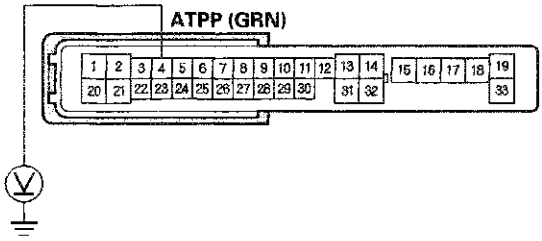

Wire side of female terminals

Is there about 0 V when the shift lever is in P, and is there battery voltage when the shift lever is out of P?

YES—Substitute a known-good driver's MICU and recheck. If the symptom goes away with a known-good driver's MICU, replace the original driver's MICU (see page 22-84). ■

NO—Repair or short to body ground in the wire between PCM connector terminal B14, the transmission range switch, and the driver's MICU. ■

15. Install the dashboard lower cover (see page 20-153), and the column cover (see page 20-168).

Key Interlock Solenoid Test

SRS components are located in this area. Review the SRS component locations for 4-door (see page 24-19), for 2-door (see page 24-21) and the precautions and procedures (see page 24-23) before doing repairs or service.

1. Remove the driver's dashboard lower cover (see page 20-153) and the column cover (see page 20-168).
2. Disconnect the steering lock assembly 6P connector.
3. Insert the ignition key in the key cylinder, then turn the ignition key to ACCESSORY (I).
4. Connect the positive battery terminal to steering lock assembly 6P connector terminal No. 4, and connect the negative battery terminal to No. 3 terminal. Check that the ignition key cannot be turned to LOCK (0). Release the battery terminals, and check that the key can be turned to LOCK (0) and removed from the cylinder.

STEERING LOCK ASSEMBLY 6P CONNECTOR

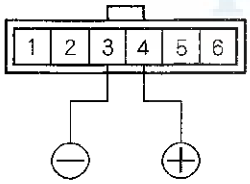

Terminal side of male terminals

5. If the key interlock solenoid works improperly, replace the ignition key cylinder/steering lock assembly (see page 17-34).
6. Install the driver's dashboard lower cover (see page 20-153) and the column cover (see page 20-168).

Shift Lock Solenoid Test

1. Connect the HDS to the DLC (A) located under the driver's side of the dashboard.

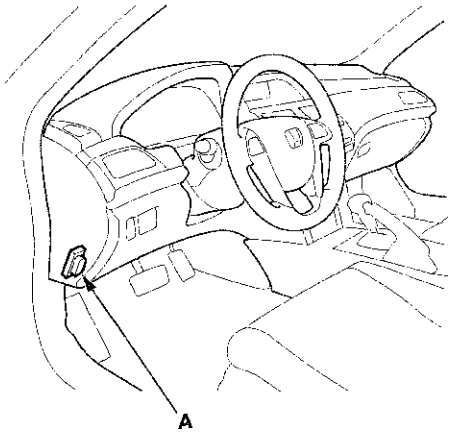

2. Turn the ignition switch to ON (II). Make sure the HDS communicates with the PCM. If it does not, go to the DLC circuit troubleshooting (see page 11-192).
3. Select Shift Lock Solenoid Test in the Miscellaneous Test Menu, and check that the shift lock solenoid operates with the HDS.
4. Check that the shift lever can be moved out of P when the Shift Lock Solenoid is ON. Move the shift lever back to P, and check that it locks with the Shift Lock Solenoid is OFF.
5. Check that the shift lock releases when the shift lock release is pushed, and check that it locks when the shift lock release is released.
6. If the shift lock solenoid does not work properly, go to the shift lock system troubleshooting (see page 14-289).

Shift Lock Solenoid Replacement

Type A Shift Lever

1. Remove the shift lever assembly (see page 14-262).

2. Release the lock tabs (A) retaining the shift lock solenoid using thin-bladed screwdrivers.

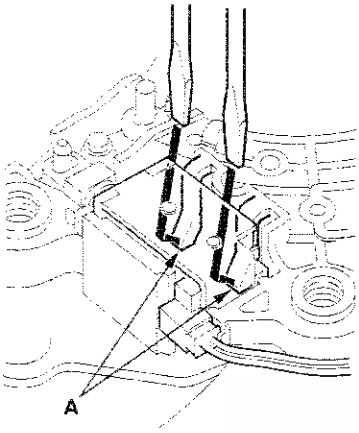

3. Insert a 6.0 mm (0.24 in.) pin (A) into the guide hole (B), and push the shift lock solenoid (C) out.

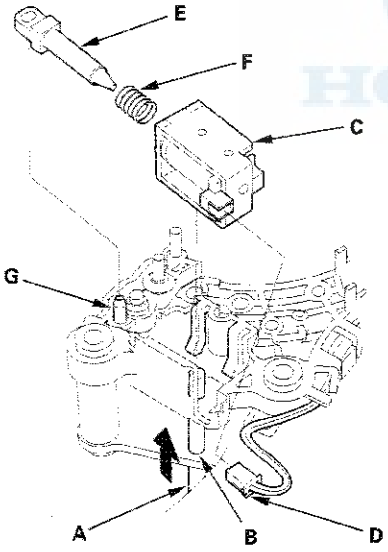

4. Disconnect the shift lock solenoid connector (D).

5. Replace the shift lock solenoid, the solenoid plunger (E), and the plunger spring (F) assembly.

6. Apply silicone grease to the tip (G) of the shift lock stop and the solenoid plunger.

   NOTE: Make sure not to get any silicone grease on the terminal part of the connectors and switches, especially if you have silicone grease on your hands or gloves.

7. Connect the shift lock solenoid connector.

8. Install the shift lock solenoid by aligning the joint of the shift lock solenoid plunger with the tip of the shift lock stop, then push the shift lock solenoid into the shift lever securely.

9. Install the shift lever assembly (see page 14-264).

(cont'd)

Shift Lock Solenoid Replacement (cont'd)

Type B Shift Lever

1. Remove the shift lever assembly (see page 14-262).
2. Remove the A/T gear position indicator panel from the shift lever (see page 14-268).
3. Remove the shift lock solenoid harness (A) from the harness guide.

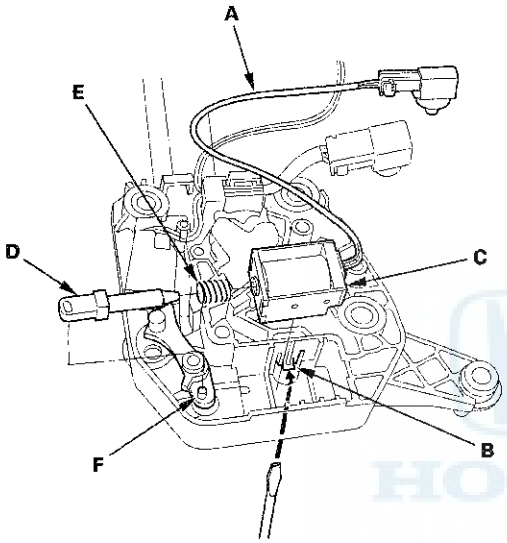

4. Release the lock tab (B) retaining the shift lock solenoid using a thin-bladed screwdriver.
5. Replace the shift lock solenoid (C), the solenoid plunger (D), and the plunger spring (E) assembly.
6. Apply silicone grease to the tip (F) of the shift lock stop and the solenoid plunger.

   NOTE: Make sure not to get any silicone grease on the terminal part of the connectors and switches, especially if you have silicone grease on your hands or gloves.

7. Install the shift lock solenoid by aligning the joint of the shift lock solenoid plunger with the tip of the shift lock stop, then push the shift lock solenoid into the shift lever securely.
8. Install the A/T gear position indicator panel on the shift lever (see page 14-268).
9. Tie the harnesses of the park pin switch/A/T gear position indicator panel light and the shift lock solenoid at the harness clamp.
10. Install the shift lever assembly (see page 14-268).

Shift Lock Stop, Shift Lock Stop Cushion Replacement

Type A Shift Lever

1. Remove the shift lock solenoid (see page 14-297).

2. Remove the shift lock stop (A) and the stop cushion as a set.

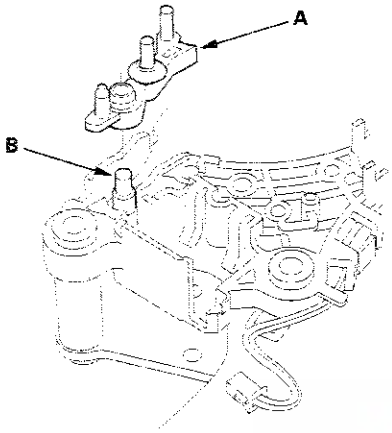

3. Apply silicone grease to the pin (B) on the shift lever bracket, and install the shift lock stop over the pin.

   NOTE: Make sure not to get any silicone grease on the terminal part of the connectors and switches, especially if you have silicone grease on your hands or gloves.

4. Install a new shift lock stop.

5. Install the shift lock solenoid (see page 14-296).

Type B Shift Lever

1. Remove the shift lever assembly (see page 14-262).

2. Release the lock tab (A) retaining the shift lock solenoid using a thin-bladed screwdriver.

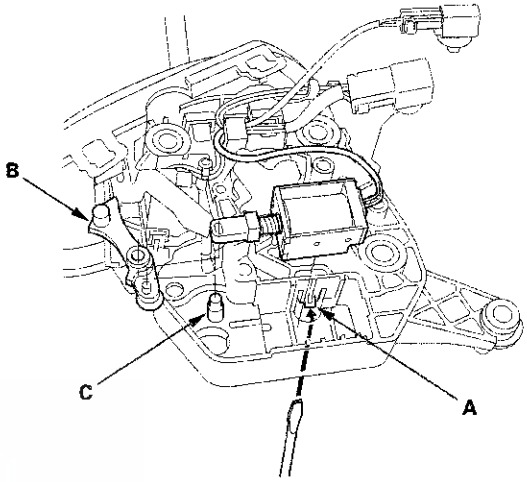

3. Remove the shift lock stop (B) and the stop cushion as a set.

4. Apply silicone grease to the pin (C) on the shift lever bracket, and install the shift lock stop over the pin.

   NOTE: Make sure not to get any silicone grease on the terminal part of the connectors and switches, especially if you have silicone grease on your hands or gloves.

5. Install a new shift lock stop.

6. Install the shift lock solenoid by aligning the joint of the shift lock solenoid plunger with the tip of the shift lock stop, then push the shift lock solenoid into the shift lever securely.

7. Install the shift lever assembly (see page 14-264).

Shift Lock Release, Release Spring, and Release Shaft Replacement

Type A Shift Lever

1. Remove the shift lever assembly (see page 14-262).
2. Remove the A/T gear position indicator panel from the shift lever.
3. Release the lock (A) of the shift lock release, and remove the shift lock release and the release spring (B).

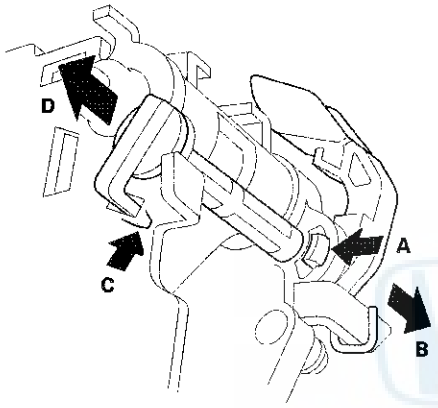

4. Release the lock (C) of the shift lock release shaft, and remove the shaft (D).
5. Replace the shift lock release, the release spring, or the release shaft.
6. Install the shift lock release spring (A) in the shift lock release (B).

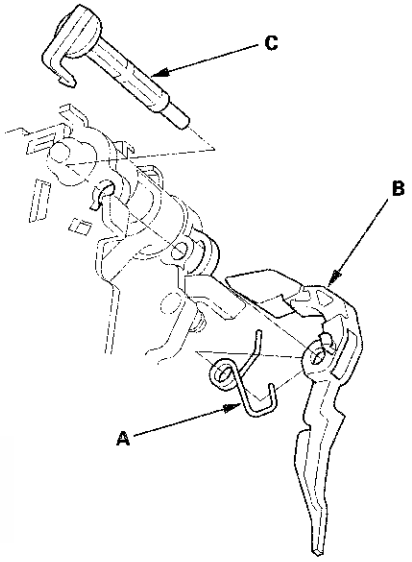

7. Install the shift lock release shaft (C) in the shift lever, and install the shift lock release and the release spring on the release shaft end.
8. Make sure that the release spring end (A) is installed in the shift lock release (B), and the hooked end (C) is on the stop (D).

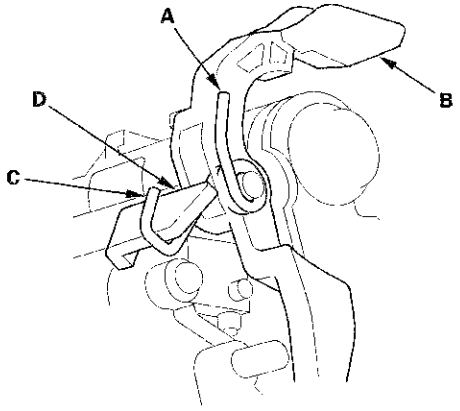

9. Install the A/T gear position indicator panel on the shift lever.
10. Install the shift lever assembly (see page 14-264).

Park Pin Switch Test

1. Remove the center console (see page 20-148).

2. Disconnect the park pin switch/A/T gear position indicator panel light connector.

3. Shift the shift lever to P, and check for continuity between park pin switch/A/T gear position indicator panel light connector terminals No. 1 and No. 2. There should be no continuity.

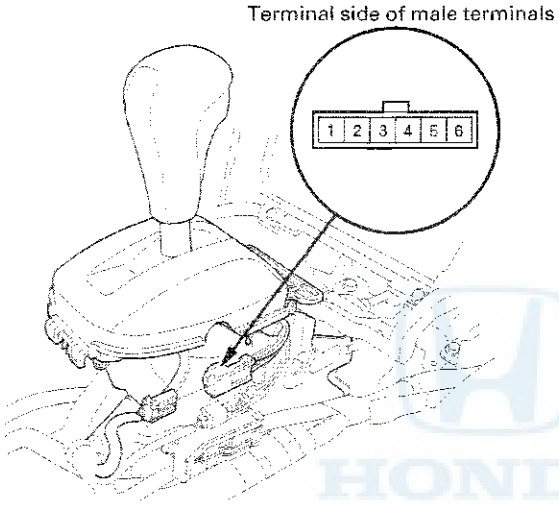

4. Shift out of P, and check for continuity between connector terminals No. 1 and No. 2. There should be continuity.

5. If the park pin switch tests OK, go to step 6. If the park pin switch fails the test, replace the park pin switch (see page 14-302).

6. Install the center console (see page 20-148).

Park Pin Switch Replacement

Type A Shift Lever

NOTE: The A/T gear position indicator panel light harness and the park pin switch are not available separately. Replace the A/T gear position indicator panel light harness and the park pin switch as a set.

1. Remove the center console (see page 20-148).
2. Remove the shift lever assembly (see page 14-262).
3. Wrap the end of a flat-tip screwdriver with tape, pry the shift lever knob cover locks, and remove the shift lever knob cover (A).

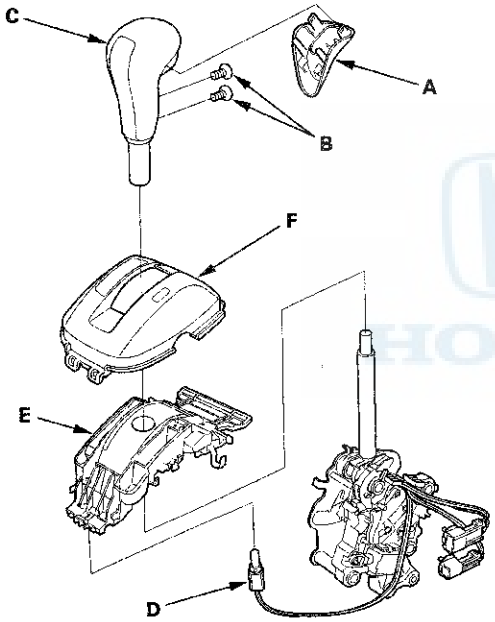

4. Remove the screws (B), and remove the shift lever knob (C) from the shift lever.
5. Remove the A/T gear position indicator panel light socket (D) from the indicator panel base (E).
6. Remove the A/T gear position indicator panel (F), and disassemble the indicator panel and the panel base.
7. Release the lock (A) of the shift lock release, and remove the shift lock release and the release spring (B).

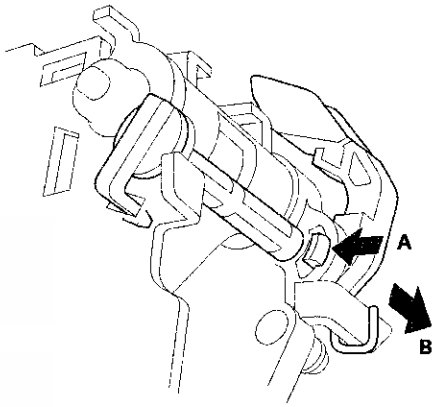

8. Remove the screw (A), the harness wire tie (B), and remove the light bulb (C) from the socket.

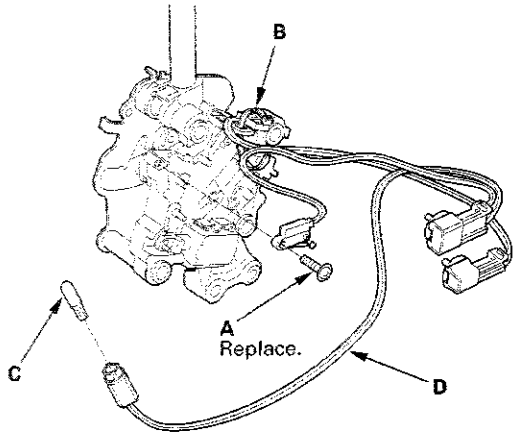

9. Remove the park pin switch/A/T gear position indicator panel light harness (D).

10. Install a new park pin switch, and secure the switch with a new screw.

11. Tie the harnesses of the park pin switch/A/T gear position indicator panel light and the shift lock solenoid at the guide with the harness wire tie.

12. Install the A/T gear position indicator panel light bulb in the socket.

13. Install the shift lock release spring (A) in the shift lock release (B).

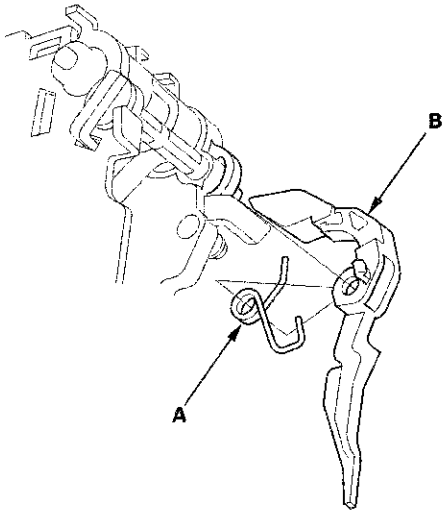

14. Install the shift lock release and the release spring on the release shaft end.

(cont'd)

Park Pin Switch Replacement (cont'd)

15. Make sure that the release spring end (A) is installed in the shift lock release (B), and the hooked end (C) is on the stop (D).

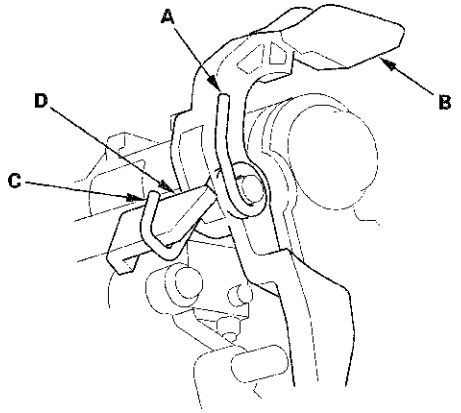

16. Install the A/T gear position indicator panel base (A).

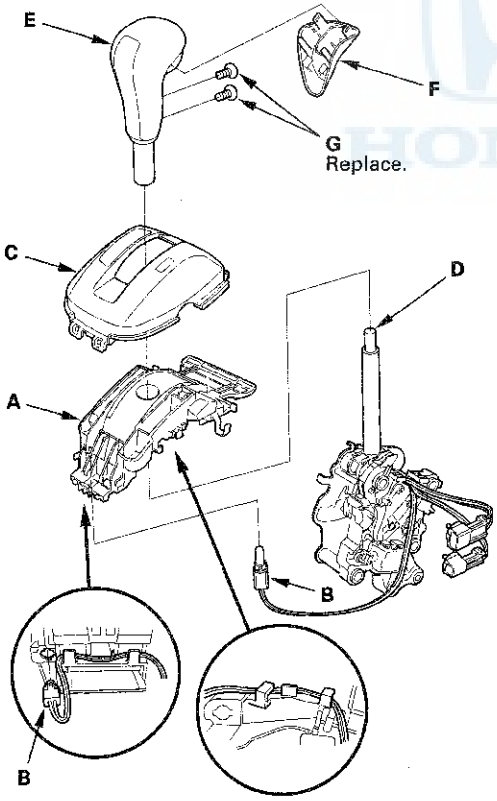

17. Install the A/T gear position indicator panel light socket (B) in the indicator panel base.

18. Route the park pin switch/A/T gear position indicator panel light harnesses. Take the slack out of the harnesses, and secure the harnesses with the harness wire tie at the guide.

19. Install the A/T gear position indicator panel (C).

20. Apply silicone grease to the top (D) of the shift lever rod.

    NOTE: Make sure not to get any silicone grease on the terminal part of the connectors and switches, especially if you have silicone grease on your hands or gloves.

21. Install the shift lever knob (E) over the shift lever.

22. Install the shift lever knob cover (F) on the shift lever knob with new screws (G).

23. Install the shift lever assembly (see page 14-264).

24. Install the center console (see page 20-148).

Type B Shift Lever

NOTE: The A/T gear position indicator panel light harness and the park pin switch are not available separately. Replace the A/T gear position indicator panel light harness and the park pin switch as a set.

1. Remove the center console (see page 20-148).
2. Remove the shift lever assembly (see page 14-262).
3. Wrap the end of a flat-tip screwdriver with tape, pry the shift lever knob cover locks, and remove the shift lever knob cover (A).

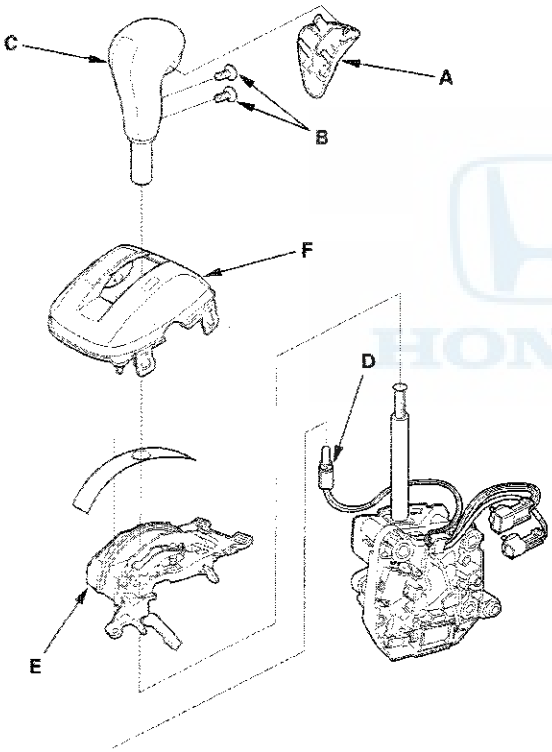

4. Remove the screws (B), and remove the shift lever knob (C) from the shift lever.
5. Remove the A/T gear position indicator panel light socket (D) from the indicator panel base (E).
6. Remove the A/T gear position indicator panel (F), and disassemble the indicator panel and the panel base.
7. Remove the light bulb (A) from the socket.

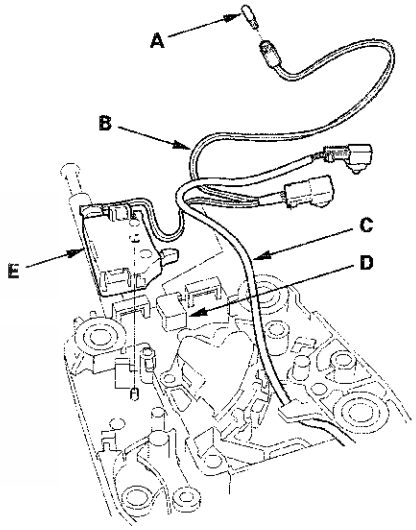

8. Remove the park pin switch/A/T gear position indicator panel light harness (B) and the shift lock solenoid harness (C) from the harness guide (D).
9. Install a new park pin switch (E).
10. Route the park pin switch/A/T gear position indicator panel light harness and the shift lock solenoid harness in the harness guide.
11. Install the A/T gear position indicator panel light bulb in the socket.

(cont'd)

Park Pin Switch Replacement (cont'd)

12. Install the A/T gear position indicator panel base (A).

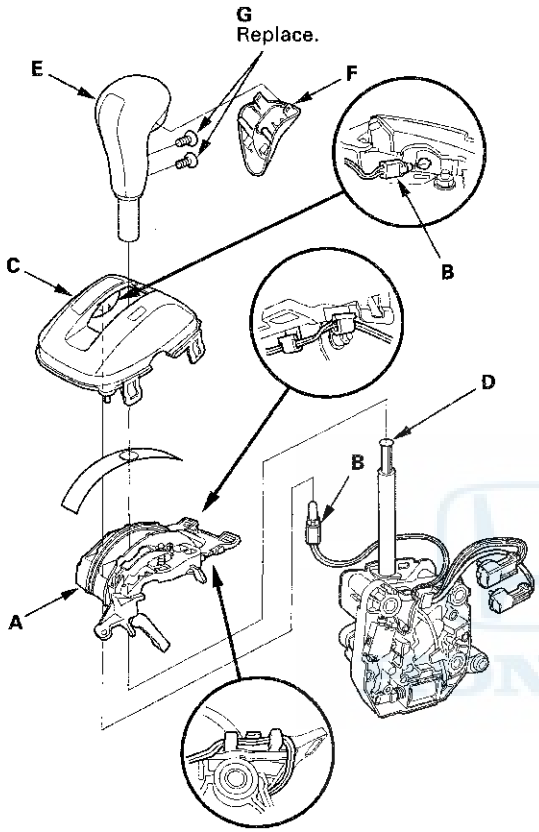

13. Install the A/T gear position indicator panel light socket (B) in the indicator panel base.

14. Route the park pin switch/A/T gear position indicator panel light harnesses. Take the slack out of the harnesses, and secure the harnesses in the guide.

15. Install the A/T gear position indicator panel (C).

16. Apply silicone grease to the top (D) of the shift lever rod.

    NOTE: Make sure not to get any silicone grease on the terminal part of the connectors and switches, especially if you have silicone grease on your hands or gloves.

17. Install the shift lever knob (E) over the shift lever.

18. Install the shift lever knob cover (F) on the shift lever knob with new screws (G).

19. Install the shift lever assembly (see page 14-264).

20. Install the center console (see page 20-148).

End Cover Removal

Special Tools Required
Mainshaft holder 07GAB-PF50101

1. Remove the three bolts (D) securing the ATF cooler inlet line brackets, the ATF filter bracket bolts (E), the ATF cooler line banjo bolts (F), and remove the ATF cooler line/ATF filter (G) and the filter brackets (H).

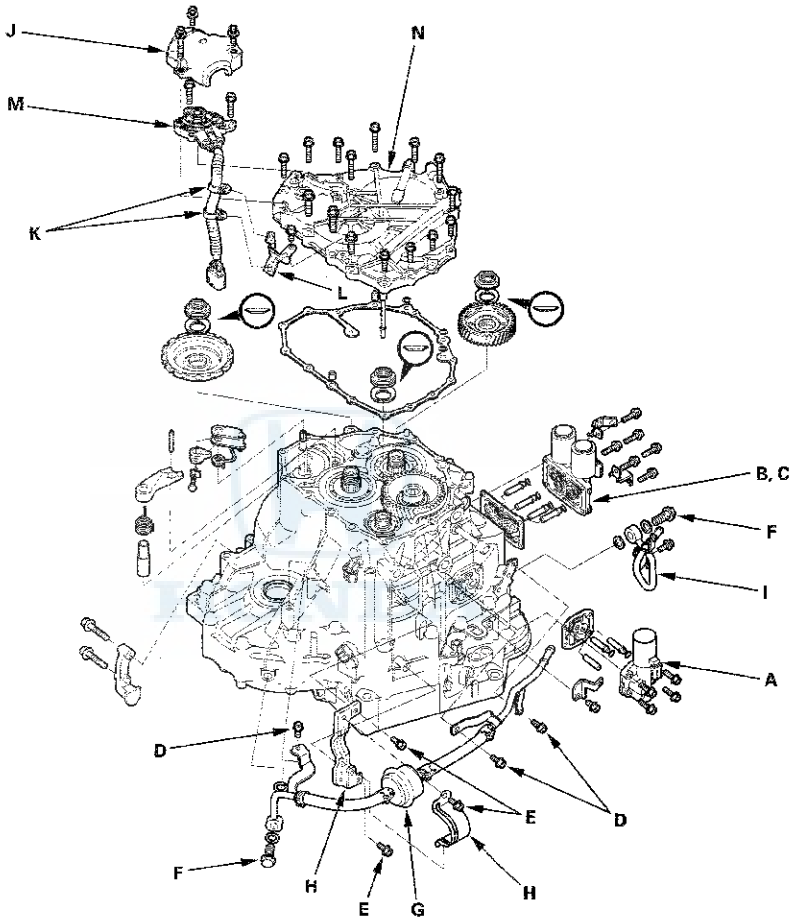

2. Remove the ATF cooler outlet line (I).

3. Remove A/T clutch pressure control solenoid valve A, the ATF joint pipes, the O-rings, the ATF pipe, and the gasket.

4. Remove A/T clutch pressure control solenoid valves B and C with the harness brackets, the ATF joint pipes, the O-rings, and the gasket.

5. Remove the transmission range switch cover (J).

6. Remove the transmission range switch harness clamps (K) from the clamp bracket (L), then remove the transmission range switch (M).

7. Remove the end cover (N), the dowel pins, the O-rings, and the end cover gasket.

(cont'd)

End Cover Removal (cont'd)

8. Install the mainshaft holder onto the mainshaft.

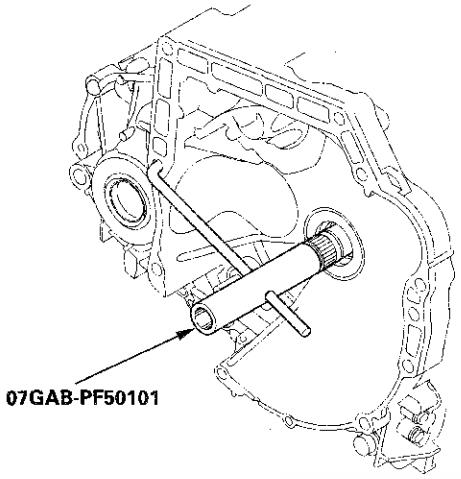

9. Engage the park pawl with the park gear.

10. Cut the lock tab (A) of the each shaft locknut (B) using a chisel (C). Then remove the locknuts and the conical spring washers from each shaft.

    NOTE:
    - Countershaft and secondary shaft locknuts have left-hand threads.
    - Keep all of the chiseled particles out of the transmission.
    - Clean the old mainshaft and the old countershaft locknuts; they are used to install the press fit idler gear on the mainshaft, and the park gear on the countershaft.

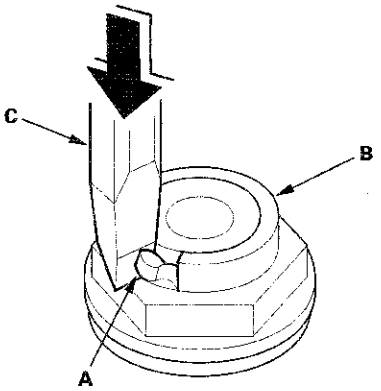

11. Remove the mainshaft holder from the mainshaft.

12. Set a two-jaw (or three-jaw) puller (A) on the countershaft (B) with a spacer (C) between the puller and the countershaft, then remove the park gear (D).

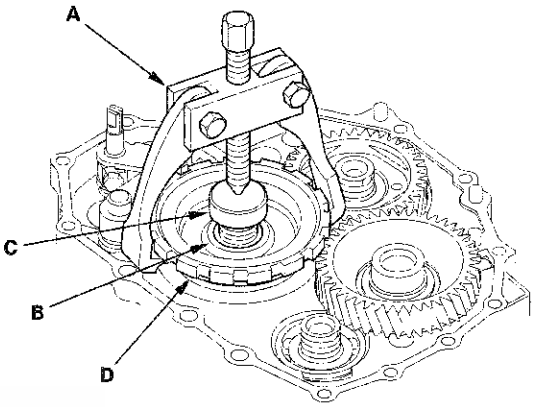

13. Install a puller (A) with two 6 x 1.0 mm bolts (B) on the mainshaft idler gear (C). Set a spacer (D) between the puller and the mainshaft (E), then remove the mainshaft idler gear.

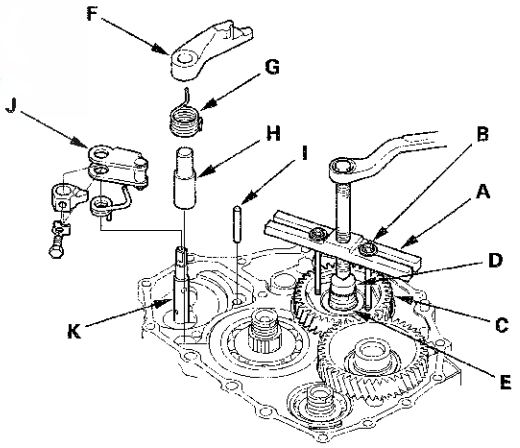

14. Remove the park pawl (F), the park pawl spring (G), the park pawl shaft (H), and the stop shaft (I).

15. Remove the park lever (J) from the control shaft (K).

Park Lever Stop Inspection and Adjustment

1. Set the park lever in the P position.

2. Measure the distance (A) between the park pawl shaft (B) and the park lever roller pin (C).

   Standard: 57.7—58.7 mm (2.27—2.31 in.)

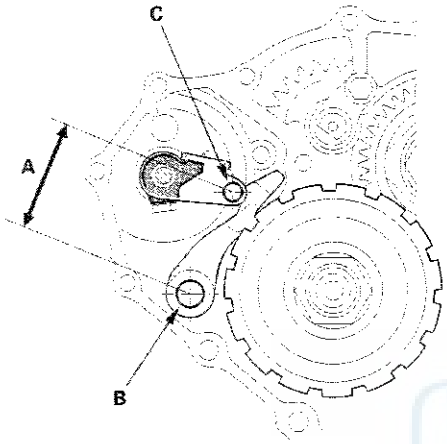

3. If the measurement is out of standard, select and install the appropriate park lever stop (A) from the table.

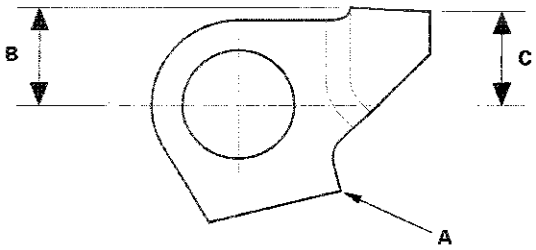

PARK LEVER STOP

Mark	Part Number	B	C
1	24537-PA9-003	11.00 mm (0.433 in.)	11.00 mm (0.433 in.)
2	24538-PA9-003	10.80 mm (0.425 in.)	10.65 mm (0.419 in.)
3	24539-PA9-003	10.60 mm (0.417 in.)	10.30 mm (0.406 in.)

4. After replacing the park lever stop, make sure the distance is within tolerance.

Idler Gear Shaft Bearing Replacement

Special Tools Required
- Adjustable bearing puller, 25—40 mm 07736-A01000B or 07736-A01000A
- Driver 07749-0010000
- Attachment, 52 x 55 mm 07746-0010400

1. Remove the idler gear shaft bearing (A) from the end cover (B) using the 25—40 mm adjustable bearing puller and a commercially available 3/8 "-16 slide hammer (C).

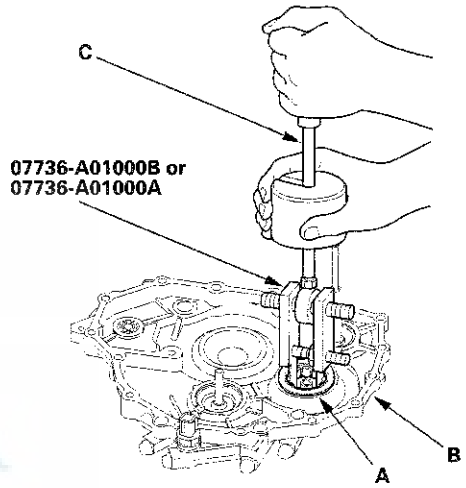

2. Install a new bearing in the end cover using the driver and the 52 x 55 mm attachment.

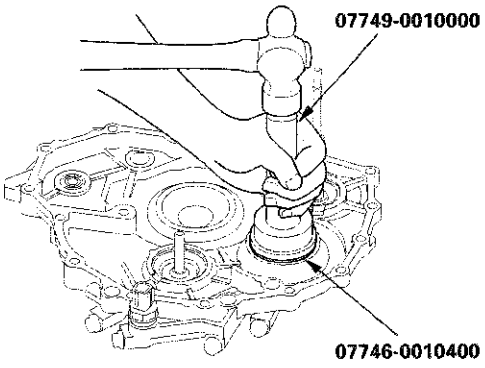

Selector Control Shaft Oil Seal Replacement

Special Tools Required
- Driver 07749-0010000
- Attachment, 22 x 24 mm 07746-001A800

1. Remove the oil seal (A) from the end cover (B).

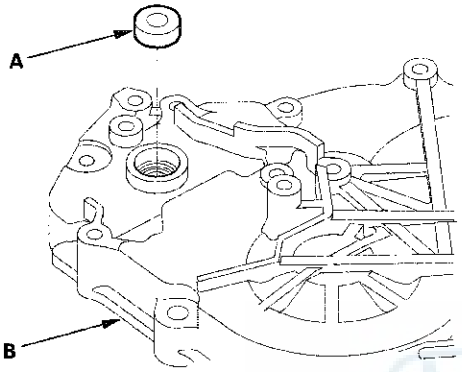

2. Install a new oil seal flush to the end cover using the driver and the 22 x 24 mm attachment.

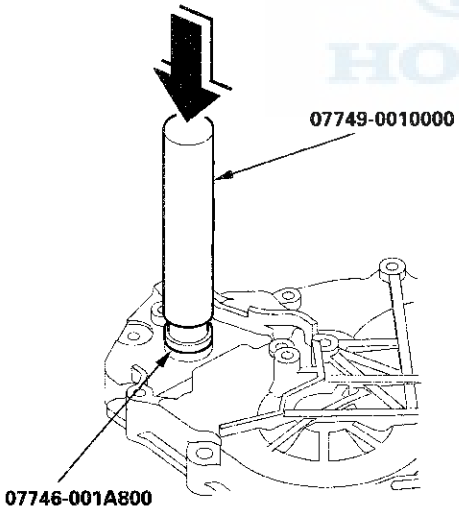

Selector Control Shaft Bearing Replacement

Special Tools Required
- Driver 07749-0010000
- Attachment, 22 x 24 mm 07746-001A800

1. Remove the oil seal from the end cover, then remove the bearing.

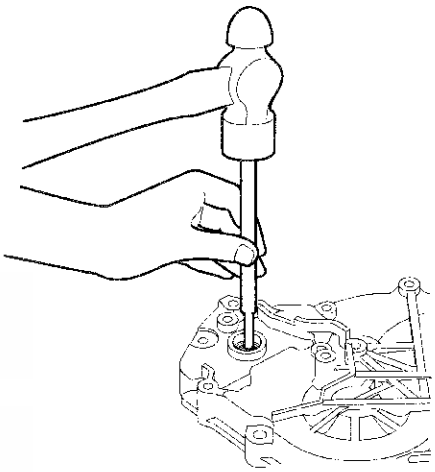

2. Install a new bearing flush to the end cover using the driver and the 22 x 24 mm attachment.

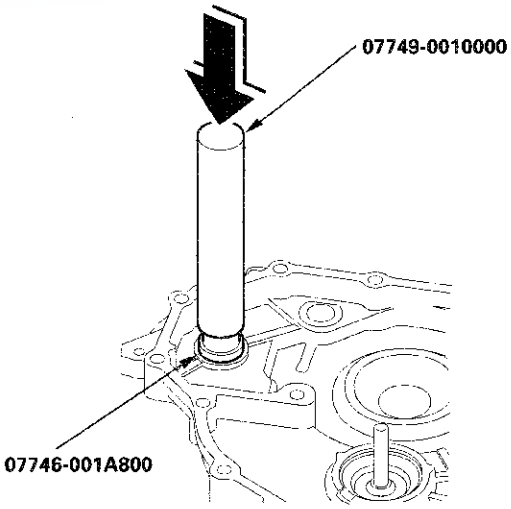

3. Install a new oil seal.

ATF Feed Pipe Replacement

1. Remove the snap rings (A), the ATF feed pipes (B), and the feed pipe flanges (C) from the end cover (D).

   NOTE: Replace the end cover, if the 1st clutch ATF feed pipe (E) replacement is required.

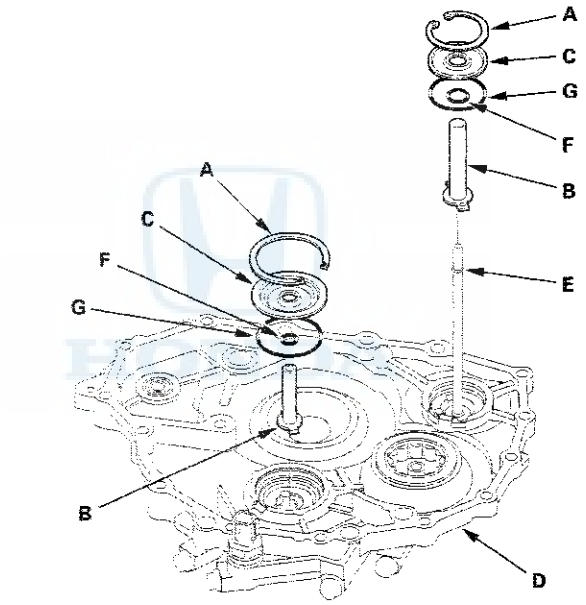

2. Install new O-rings (F) over the ATF feed pipes.

3. Install the ATF feed pipes in the end cover by aligning the feed pipe tabs with the indentations in the end cover.

4. Install new O-rings (G) in the end cover, then install the feed pipe flanges over the ATF feed pipes.

5. Secure the ATF feed pipes and the feed pipe flanges with the snap rings.

Transmission Housing

Housing and Shaft Assembly Removal

Special Tools Required
Housing puller 07HAC-PK40102

1. Remove the ATF feed pipe (A) from the idler gear shaft, and remove the ATF lubrication pipe (B) from the transmission housing.

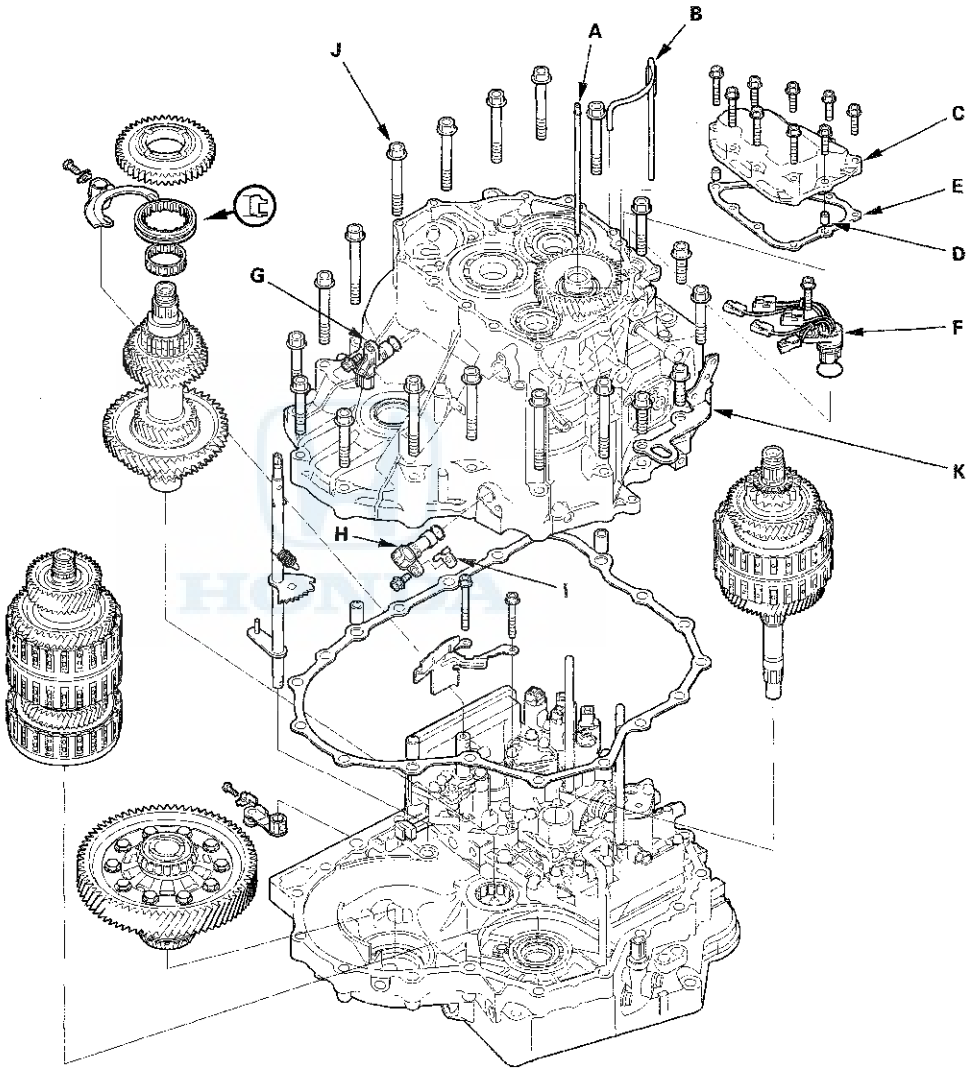

2. Remove the shift solenoid valve cover (C), the dowel pins (D), and the gasket (E).

3. Disconnect the connectors from the shift solenoid valves, and remove the shift solenoid wire harness (F) with the O-ring.

4. Remove the input shaft (mainshaft) speed sensor (G) with the O-ring, and remove the output shaft (countershaft) speed sensor (H) with the O-ring and the washer (I).

5. Remove the transmission housing mounting bolts (19 bolts) (J) and the transmission hanger (K).

6. Align the spring pin (A) on the selector control shaft (B) with the transmission housing groove (C) by turning the selector control shaft with the selector control lever.

   NOTE: Do not squeeze the end of the selector control shaft tips together when turning the selector control shaft.

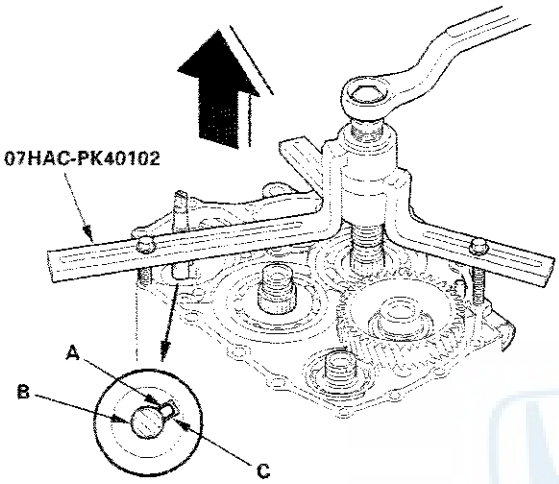

7. Install the housing puller over the mainshaft, then remove the transmission housing.

8. Remove the countershaft reverse gear and the needle bearing.

9. Remove the lock bolt securing the reverse shift fork, then remove the reverse shift fork with the reverse selector together.

10. Remove the selector control lever from the selector control shaft.

11. Unlock the detent spring (A) from the detent arm (B).

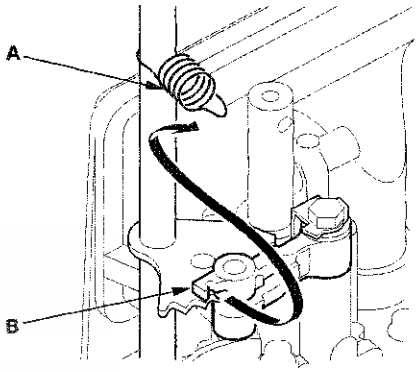

(cont'd)

Housing and Shaft Assembly Removal (cont'd)

12. Remove the selector control shaft (A) from the torque converter housing.

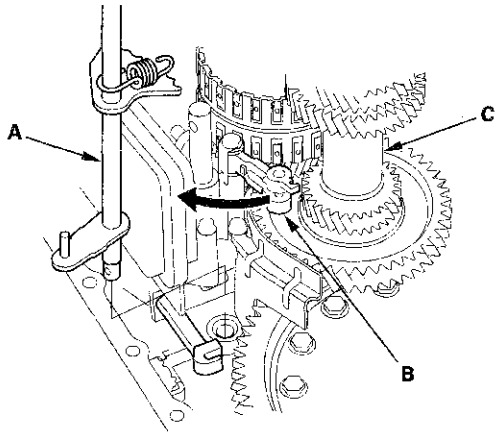

13. Turn the detent arm (B) away from the countershaft (C).

14. Remove the mainshaft subassembly (A), the countershaft subassembly (B) and the secondary shaft subassembly (C) together. Do not bump the countershaft on the baffle plate (D).

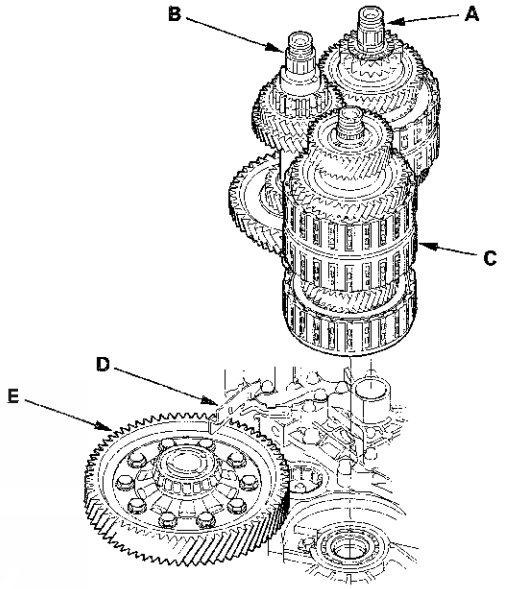

15. Remove the baffle plate.

16. Remove the differential assembly (E).

Bearing Removal

Special Tools Required
- Attachment, 78 x 80 mm 07NAD-PX40100
- Driver 07749-0010000
- Attachment, 42 x 47 mm 07746-0010300

1. Remove the idler gear shaft (see page 14-342) when removing the mainshaft bearing and the idler gear shaft bearing.

   NOTE: If you are only removing the countershaft bearing, the idler gear shaft removal is not needed.

2. To remove the mainshaft bearing and the countershaft bearing from the transmission housing, expand each snap ring using snap ring pliers, then drive the bearing out using the driver and the 78 x 80 mm attachment.

   NOTE: Do not remove the snap ring unless it's necessary to clean the grooves in the transmission housing.

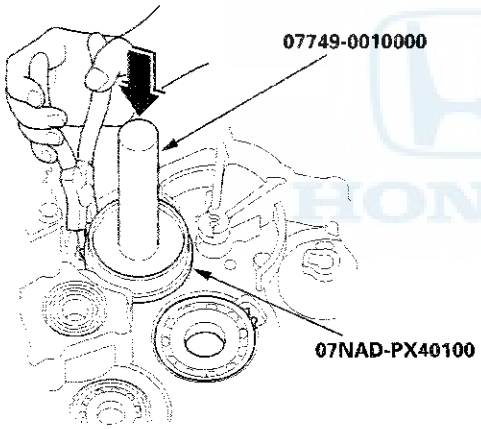

3. To remove the secondary shaft bearing and the idler gear shaft bearing, expand each snap ring using snap ring pliers, then drive the bearing out using the driver and the 42 x 47 mm attachment.

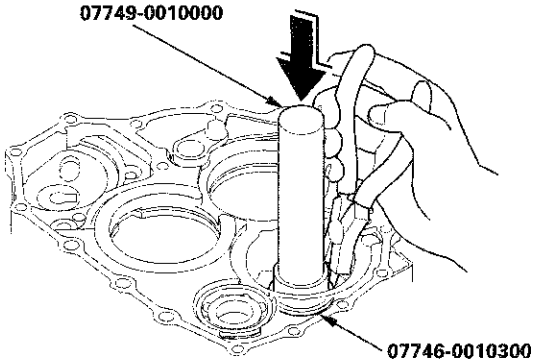

Bearing Installation

Special Tools Required
- Attachment, 78 x 80 mm 07NAD-PX40100
- Driver 07749-0010000
- Attachment, 42 x 47 mm 07746-0010300

1. Install the bearings in the direction shown.

2. Expand each snap ring using snap ring pliers, and install the mainshaft bearing (A) and the countershaft bearing (B) part-way into the housing using the driver and the 78 x 80 mm attachment.

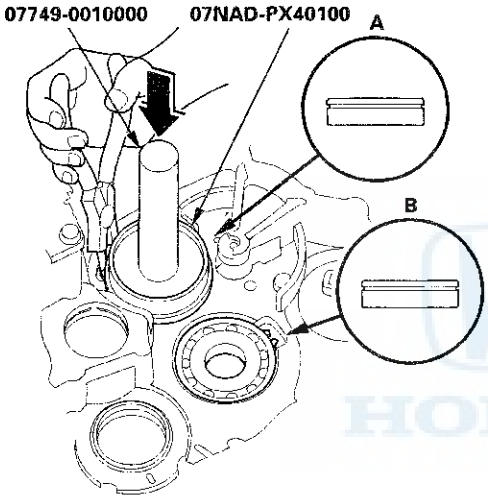

3. Release the snap ring pliers, then push the bearing down into the transmission housing until the snap ring snaps in place around it.

4. Expand the snap ring of the secondary shaft bearing (A) the idler gear shaft bearing (B) using the snap ring pliers, and install the bearing part-way into the housing using the driver and the 42 x 47 mm attachment.

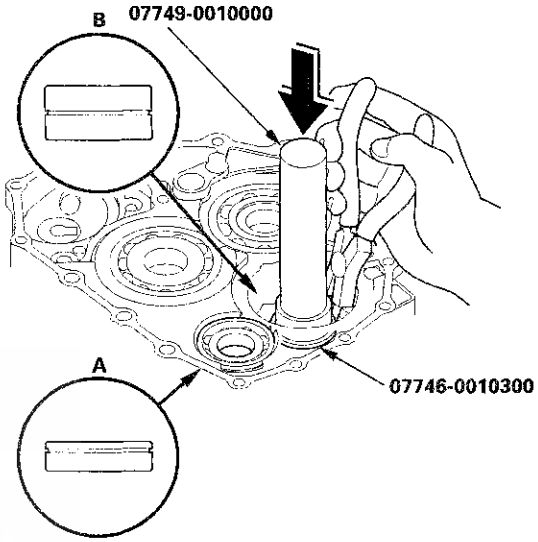

5. Release snap ring pliers, then push the bearings down into the housing until the snap ring snaps in place around it.

6. After installing the bearings check that the snap rings (A) are seated in the bearing and the transmission housing grooves, and that the snap ring end gaps (B) are correct.

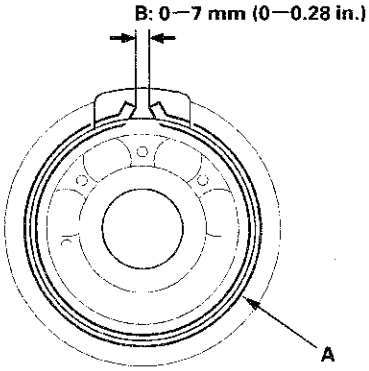

7. Install the idler gear shaft (see page 14-342).

Reverse Idler Gear Removal and Installation

Removal

1. Remove the bolt (A) securing the reverse idler gear shaft holder (B).

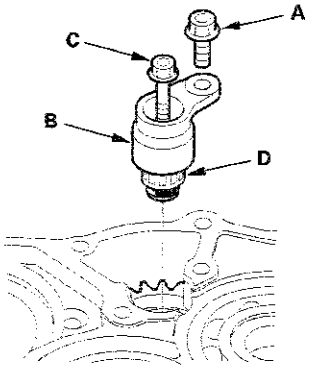

2. Install a 5 x 0.8 mm bolt (C) in the reverse idler gear shaft (D), and pull it to remove the reverse idler gear shaft and the reverse idler gear shaft holder together.

3. Remove the reverse idler gear (A).

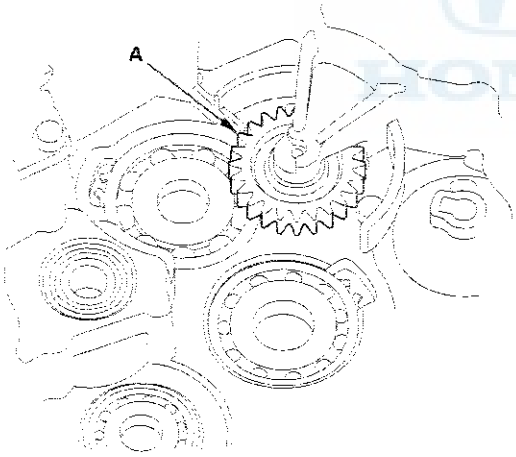

Installation

1. Install the reverse idler gear in the transmission housing.

2. Lightly coat the reverse idler gear shaft (A), needle bearing (B), and new O-rings (C) with lithium grease.

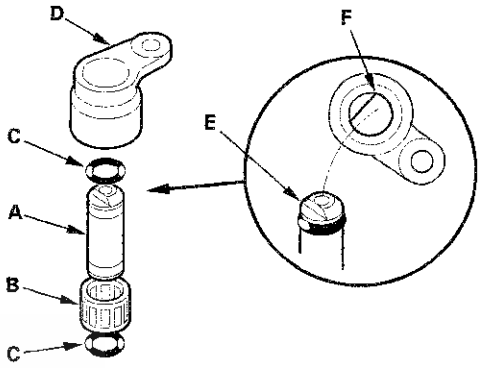

3. Assemble new O-rings and the needle bearing on the reverse idler gear shaft, then install the reverse idler gear shaft in the reverse idler gear shaft holder (D). Align the D-shaped cut out (E) of the reverse idler gear shaft with the D-shaped area (F) of the reverse idler gear shaft holder.

4. Install the reverse idler gear shaft/holder assembly on the transmission housing.

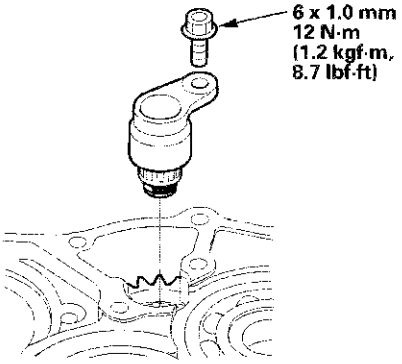

Valve Body and ATF Strainer Removal

1. Remove the ATF feed pipes (A) and the ATF joint pipes (B).

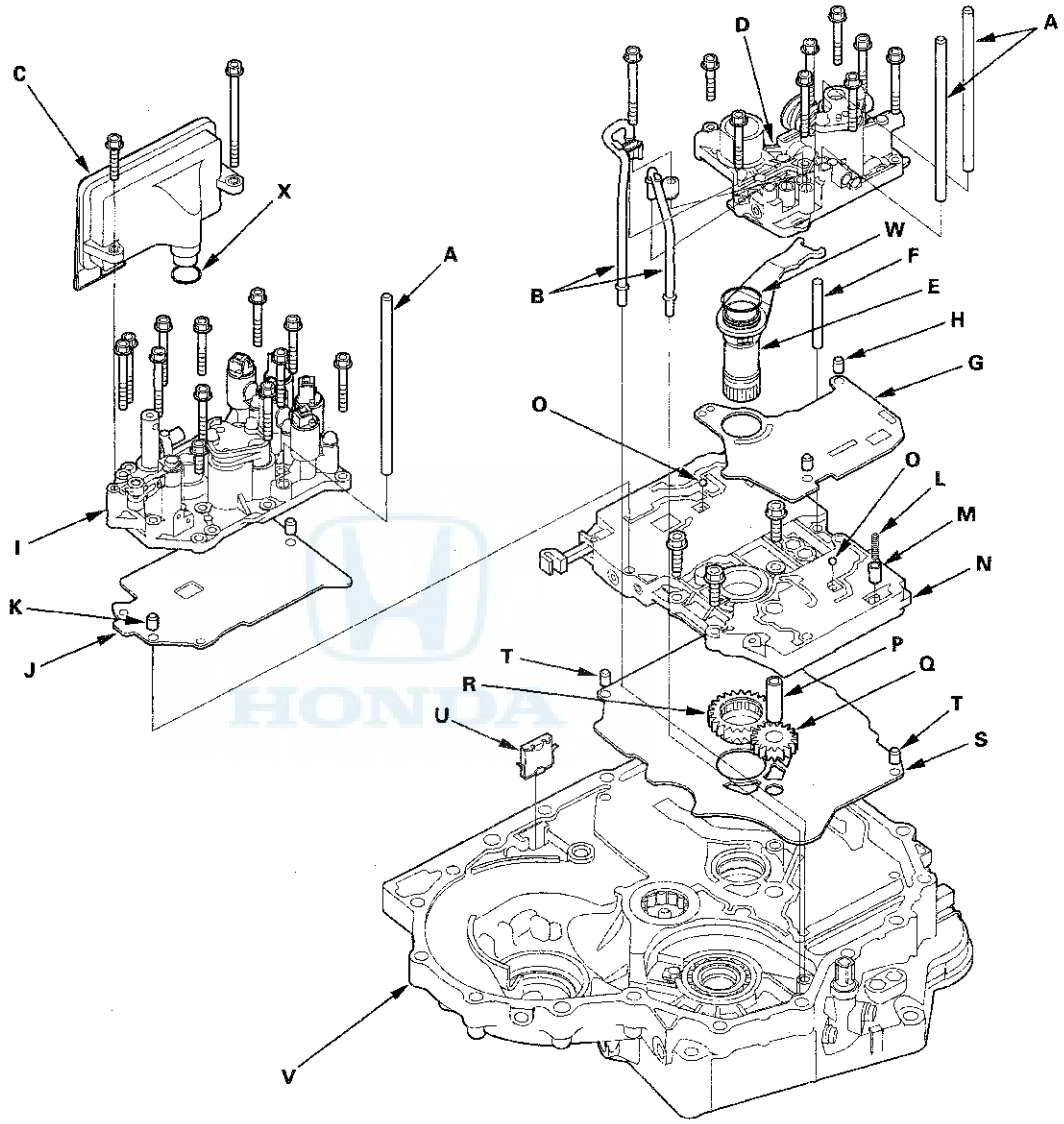

2. Remove the ATF strainer (C) (two bolts).

3. Remove the regulator valve body (D) (eight bolts).

4. Remove the stator shaft (E) and the stator shaft stop (F), then remove the regulator separator plate (G) and the two dowel pins (H).

5. Remove the servo body (I) (12 bolts), then remove the servo separator plate (J) and the two dowel pins (K).

6. Remove the cooler check valve spring (L) and the cooler check valve (M), then remove the main valve body (N) (three bolts). Do not let the two check balls (O) fall out, and do not use a magnet to remove the check balls, it may magnetize them.

7. Remove the ATF pump driven gear shaft (P), then remove the ATF pump driven gear (Q) and the ATF pump drive gear (R).

8. Remove the main separator plate (S) and the two dowel pins (T).

9. Remove the ATF magnet (U), clean and reinstall it in the torque converter housing (V).

10. Clean the inlet opening (A) of the ATF strainer (B) thoroughly with compressed air, then check that it is in good condition and that the inlet opening is not clogged.

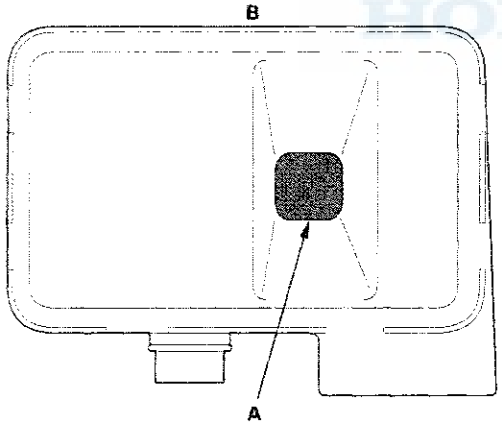

11. Test the ATF strainer by pouring clean ATF through the inlet opening, and replace it if it is clogged or damaged.

12. Remove the O-rings (W) (X) from the stator shaft and the ATF strainer. Install new ones when installing the valve bodies.

Valve Body Repair

NOTE: This repair is only necessary if one or more of the valves in a valve body do not slide smoothly in their bores. Use this procedure to free the valves.

1. Soak a sheet of #600 abrasive paper in ATF for about 30 minutes.

2. Carefully tap the valve body so the sticking valve drops out of its bore. It may be necessary to use a small screwdriver to pry the valve free. Be careful not to scratch the bore.

3. Inspect the valve for any scuff marks. Use the ATF-soaked #600 paper to polish off any burrs that are on the valve, then wash the valve in solvent and dry it with compressed air.

4. Roll up half a sheet of ATF-soaked #600 paper and insert it in the valve bore of the sticking valve. Twist the paper slightly, so that it unrolls and fits the bore tightly, then polish the bore by twisting the paper as you push it in and out.

   NOTE: The valve body is aluminum and does not require much polishing to remove any burrs.

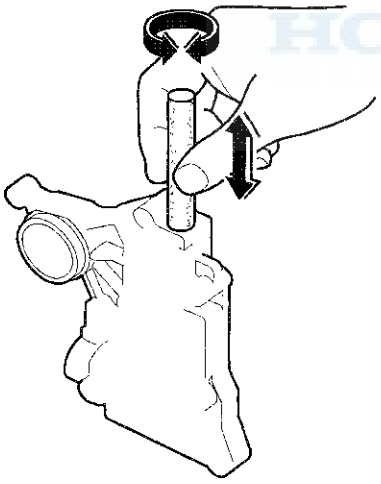

5. Remove the #600 paper. Thoroughly wash the entire valve body in solvent, then dry it with compressed air.

6. Coat the valve with ATF, then drop it into its bore. It should drop to the bottom of the bore under its own weight. If not, repeat step 4, then retest. If the valve still sticks, replace the valve body.

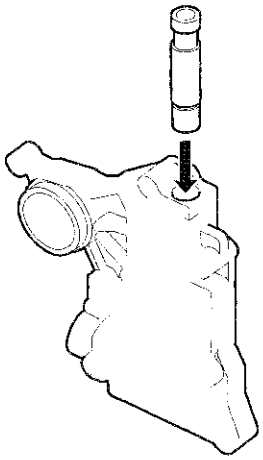

7. Remove the valve, and thoroughly clean it and the valve body with solvent. Dry all parts with compressed air, then reassemble using ATF as a lubricant.

Valve Body Valve Installation

1. Coat all parts with ATF before assembly.

2. Install the valves and the springs in the sequence shown for the main valve body (see page 14-322), the regulator valve body (see page 14-324), and the servo body (see page 14-325). Refer to the following valve cap illustrations, and install each valve cap so the end shown facing up will be facing the outside of the valve body.

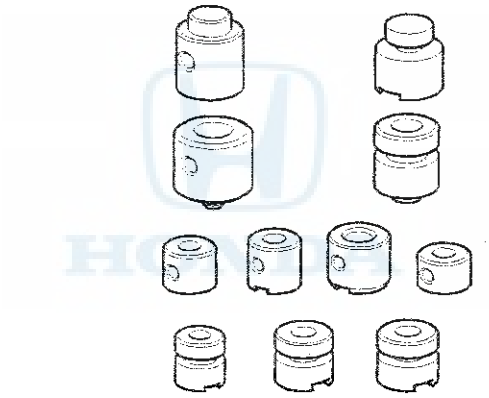

3. Install all the springs and the seats. Insert the spring (A) in the valve, then install the valve in the valve body (B). Push the spring in using a screwdriver, then install the spring seat (C).

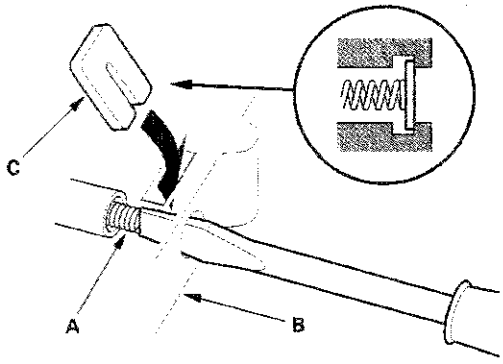

Main Valve Body Disassembly, Inspection, and Reassembly

1. Clean all parts thoroughly in solvent, and dry them with compressed air. Blow out all passages.
2. Do not use a magnet to remove the check balls, it may magnetize the balls.
3. Inspect the valve body for scoring and damage.
4. Check all valves for free movement. If any fail to slide freely, do the valve body repair procedure (see page 14-320).
5. Coat all parts with ATF during assembly.

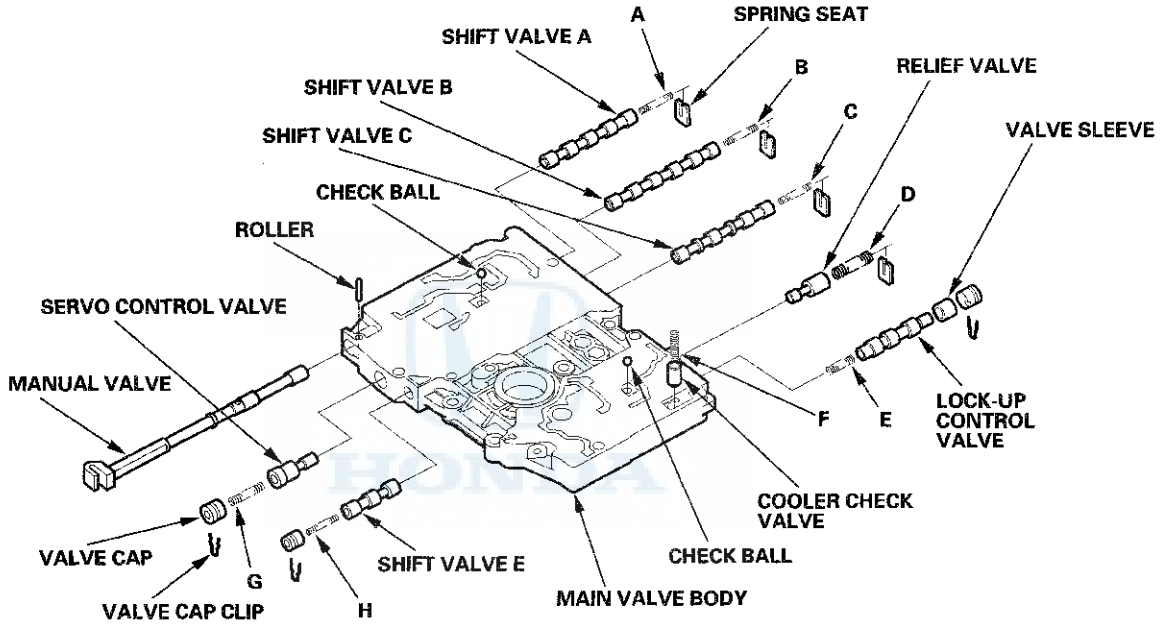

SPRING SPECIFICATIONS

Springs		Standard (New)-Unit: mm (in.)			
		Wire Diameter	O.D.	Free Length	No. of Coils
A	Shift valve A spring	0.8 (0.031)	5.6 (0.220)	28.1 (1.106)	15.9
B	Shift valve B spring	0.8 (0.031)	5.6 (0.220)	28.1 (1.106)	15.9
C	Shift valve C spring	0.8 (0.031)	5.6 (0.220)	28.1 (1.106)	15.9
D	Relief valve spring	1.0 (0.039)	9.6 (0.378)	34.1 (1.343)	10.2
E	Lock-up control valve spring	0.65 (0.026)	7.1 (0.280)	23.1 (0.909)	12.7
F	Cooler check valve spring	0.85 (0.033)	6.6 (0.260)	27.0 (1.063)	11.3
G	Servo control valve spring	0.7 (0.028)	6.6 (0.260)	35.7 (1.406)	17.2
H	Shift valve E spring	0.8 (0.031)	5.6 (0.220)	28.1 (1.106)	15.9

ATF Pump Inspection

1. Install the ATF pump drive gear (A), the driven gear (B), and the ATF pump driven gear shaft (C) in the main valve body (D). Lubricate all parts with ATF, and install the ATF pump driven gear with its grooved and chamfered side facing up.

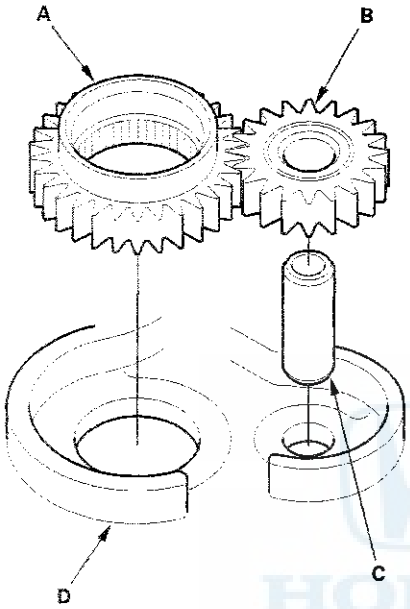

2. Measure the side clearance of the ATF pump drive gear (A) and the driven gear (B).

ATF Pump Gears Side (Radial) Clearance
Standard (New)
ATF Pump Drive Gear:
0.210—0.265 mm (0.0083—0.0104 in.)
ATF Pump Driven Gear:
0.070—0.125 mm (0.0028—0.0049 in.)

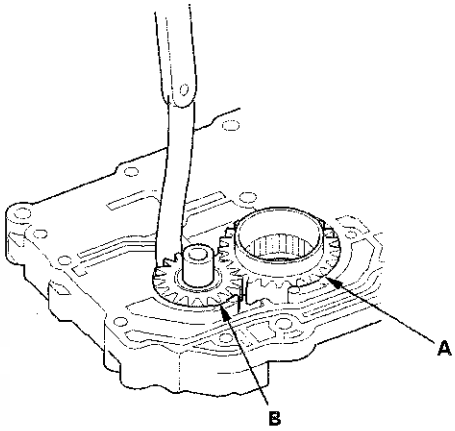

3. Remove the ATF pump driven gear shaft. Measure the thrust clearance between the ATF pump driven gear (A) and the main valve body (B) using a straight edge (C) and a feeler gauge (D).

ATF Pump Drive/Driven Gear Thrust (Axial) Clearance
Standard (New): 0.03—0.06 mm (0.001—0.002 in.)
Service Limit: 0.07 mm (0.003 in.)

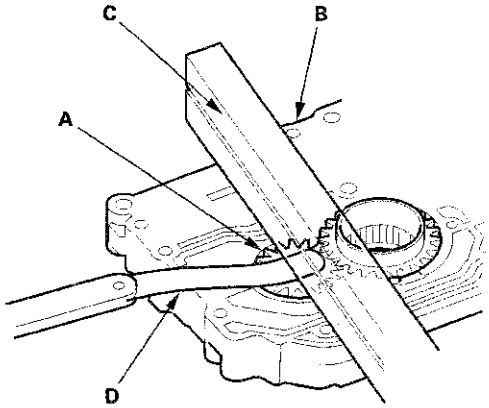

Regulator Valve Body Disassembly, Inspection, and Reassembly

1. Clean all parts thoroughly in solvent, and dry them with compressed air. Blow out all passages.
2. Inspect the valve body for scoring and damage.
3. Check all valves for free movement. If any fail to slide freely, do the valve body repair procedure (see page 14-320).
4. Hold the regulator spring cap in place while removing the stop bolt. The regulator spring cap is spring loaded.
5. Coat all parts with ATF during assembly.
6. Replace the O-rings with new ones.
7. When reassembling the valve body, align the hole in the regulator spring cap with the hole in the valve body, then press the spring cap into the valve body, and tighten the stop bolt.

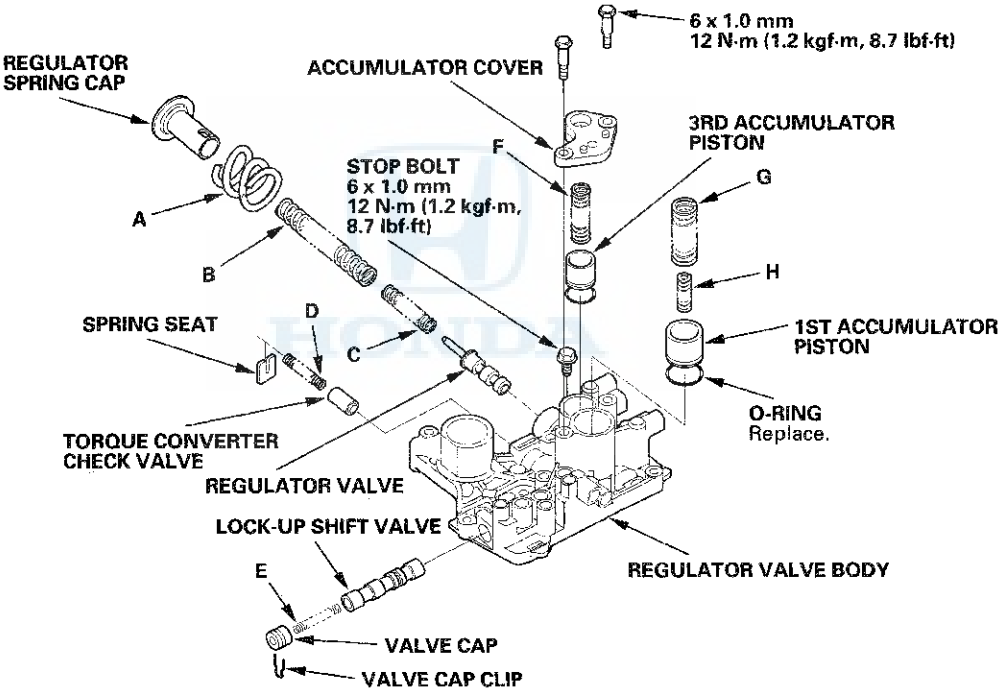

SPRING SPECIFICATIONS

Springs		Standard (New)-Unit: mm (in.)			
		Wire Diameter	O.D.	Free Length	No. of Coils
A	Stator reaction spring	4.5 (0.177)	35.4 (1.394)	30.3 (1.193)	1.92
B	Regulator valve spring A	1.85 (0.073)	14.7 (0.579)	83.0 (3.268)	16.9
C	Regulator valve spring B	1.6 (0.063)	9.2 (0.362)	44.0 (1.732)	12.5
D	Torque converter check valve spring	1.2 (0.047)	8.6 (0.339)	33.8 (1.331)	12.2
E	Lock-up shift valve spring	1.0 (0.039)	6.6 (0.260)	35.5 (1.398)	18.2
F	3rd accumulator spring	2.5 (0.098)	14.6 (0.575)	29.4 (1.157)	4.9
G	1st accumulator spring A	2.4 (0.094)	18.6 (0.732)	49.0 (1.929)	7.1
H	1st accumulator spring B	2.3 (0.091)	12.2 (0.480)	31.5 (1.240)	6.6

Servo Body Disassembly, Inspection, and Reassembly

1. Clean all parts thoroughly in solvent, and dry them with compressed air. Blow out all passages.
2. Inspect the valve body for scoring and damage.
3. Check shift valve D for free movement. If it fails to slide freely, do the valve body repair procedure (see page 14-320).
4. When removing and installing the shift solenoid valves, refer to the shift solenoid valves removal and installation (see page 14-326).
5. Coat all parts with ATF during assembly.
6. Replace the O-rings with new ones.

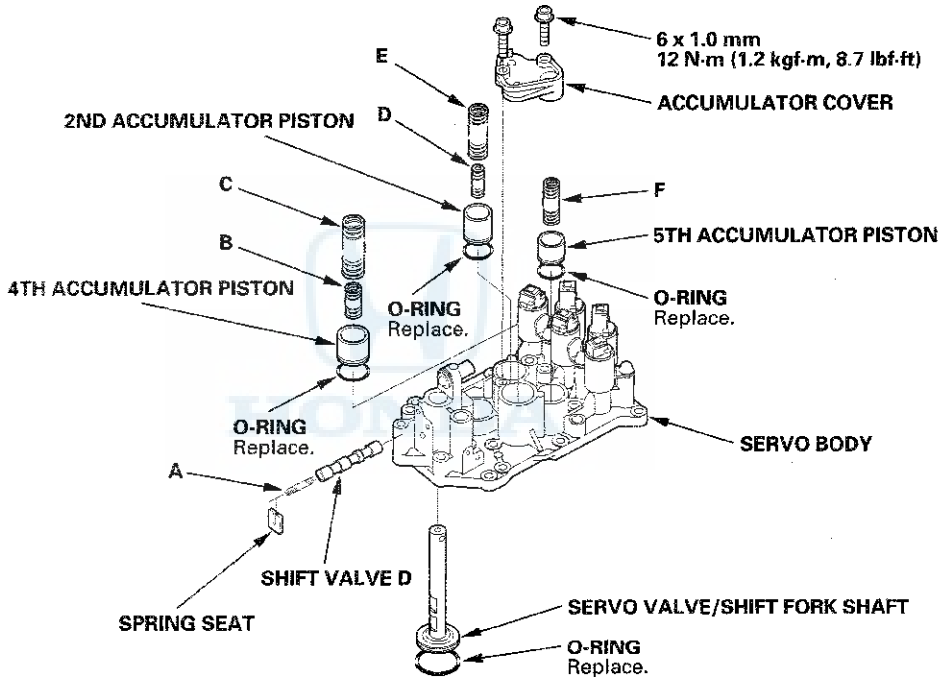

SPRING SPECIFICATIONS

Springs		Standard (New)-Unit: mm (in.)			
		Wire Diameter	O.D.	Free Length	No. of Coils
A	Shift valve D spring	0.8 (0.031)	5.6 (0.220)	28.1 (1.106)	15.9
B	4th accumulator spring B	2.3 (0.091)	12.2 (0.480)	31.5 (1.240)	6.6
C	4th accumulator spring A	2.4 (0.094)	18.6 (0.732)	49.0 (1.929)	7.1
D	2nd accumulator spring B	2.1 (0.083)	10.8 (0.425)	34.0 (1.339)	8.2
E	2nd accumulator spring A	2.1 (0.083)	16.6 (0.654)	48.7 (1.917)	8.4
F	5th accumulator spring	2.5 (0.098)	14.6 (0.575)	29.9 (1.177)	4.9

Shift Solenoid Valve Removal and Installation

NOTE:
- Do not hold the shift solenoid valve connector to remove and to install the shift solenoid valves. Hold the shift solenoid valve body.
- Do not install the shift solenoid valve A before installing the shift solenoid valve D, and do not install shift solenoid valve B before shift solenoid valve E. If shift solenoid valves A and B are installed before shift solenoid valves D and E, it may damage the hydraulic control system.

1. Remove the shift solenoid valves by holding the solenoid valve body.

2. Install new O-rings (two O-rings per shift solenoid valve) (F) on the shift solenoid valves.

   NOTE: A new solenoid valve comes with new O-rings. If you install a new solenoid valve, use the O-rings provided with it.

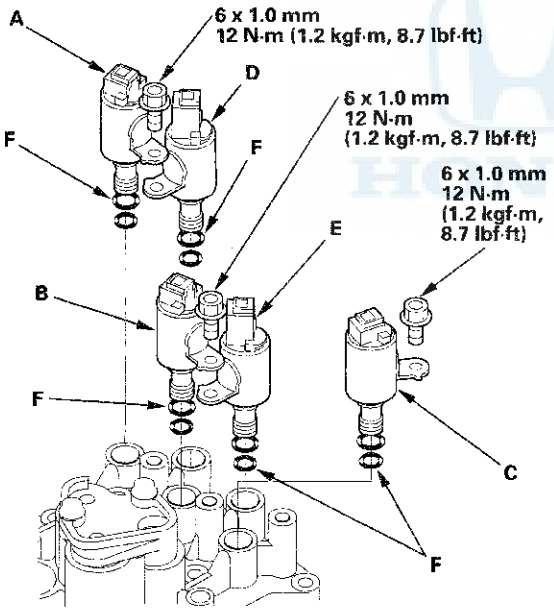

3. Install shift solenoid valve D by holding the shift solenoid valve body; be sure that the mounting bracket contacts the servo body.

4. Install shift solenoid valve A by holding the shift solenoid valve body; be sure that the mounting bracket contacts the bracket on shift solenoid valve D.

5. Install shift solenoid valve E by holding the shift solenoid valve body; be sure that the mounting bracket contacts the servo body.

6. Install shift solenoid valve B by holding the shift solenoid valve body; be sure that the mounting bracket contacts the bracket on shift solenoid valve E.

7. Install shift solenoid valve C by holding the shift solenoid valve body; be sure that the mounting bracket contacts the servo body.

Mainshaft Bearing and Oil Seal Replacement

Special Tools Required
- Adjustable bearing puller, 25—40 mm 07736-A01000B or 07736-A01000A
- Driver 07749-0010000
- Attachment, 62 x 68 mm 07746-0010500
- Attachment, 72 x 75 mm 07746-0010600

1. Remove the mainshaft bearing and the oil seal using the adjustable bearing puller and a commercially available 3/8 "-16 slide hammer (A).

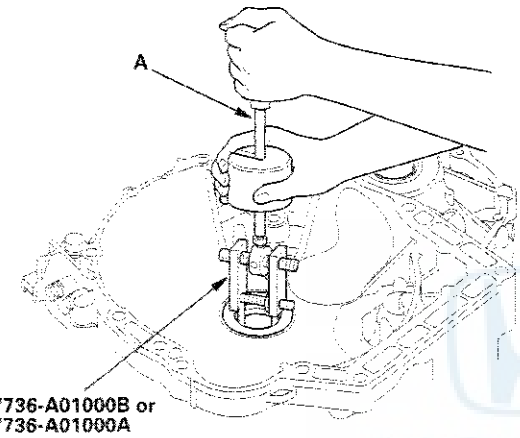

2. Install a new mainshaft bearing until it bottoms in the torque converter housing using the driver and the 62 x 68 mm attachment.

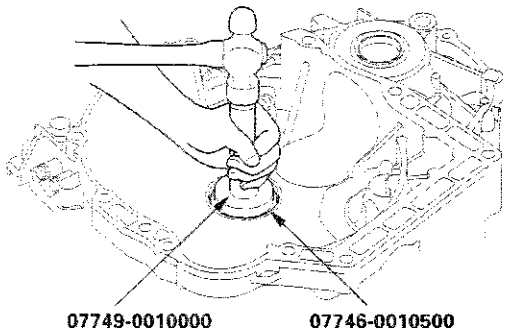

3. Install a new oil seal flush with the torque converter housing using the driver and the 72 x 75 mm attachment.

   NOTE: Do not drive the oil seal into the torque converter housing until it bottoms out; it will block the fluid return passage and cause transmission damage.

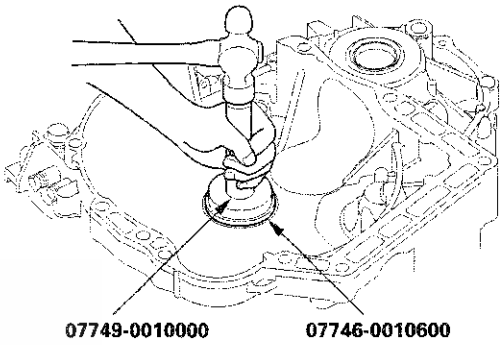

Countershaft Bearing Replacement

Special Tools Required
- Adjustable bearing puller, 25—40 mm 07736-A01000B or 07736-A01000A
- Driver 07749-0010000
- Attachment, 62 x 68 mm 07746-0010500

1. Remove the countershaft bearing using the adjustable bearing puller and a commercially available 3/8 "-16 slide hammer (A).

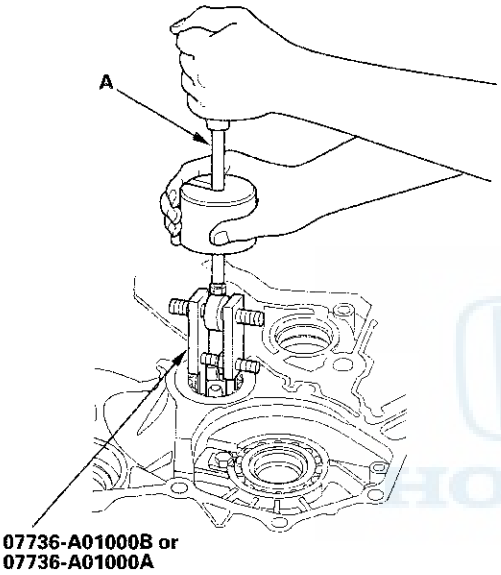

2. Remove the ATF guide plate (A), and check it for wear and damage. If the guide plate is worn or damaged, replace it.

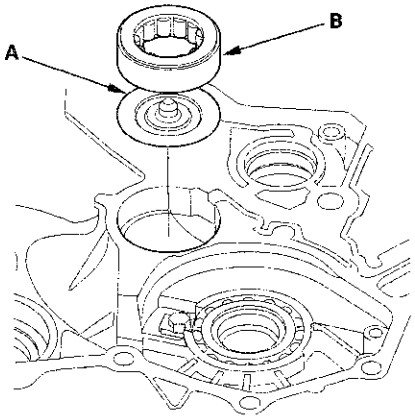

3. Install the ATF guide plate in the torque converter housing, and install a new countershaft bearing (B).

4. Install the countershaft bearing securely in the torque converter housing using the driver and the 62 x 68 mm attachment.

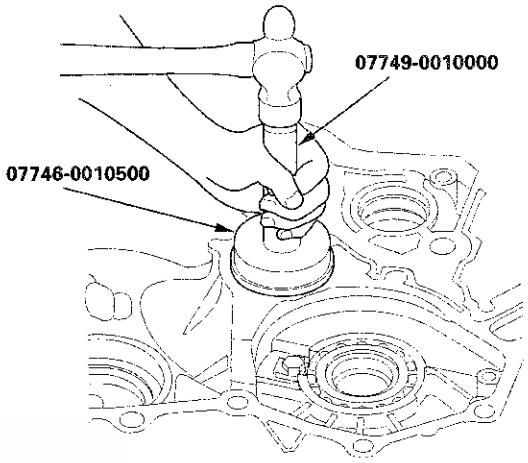

5. Make sure that the bearing outer race notch-cut (A) is installed at a height of 0—0.05 mm (0—0.002 in.) (B) above the torque converter housing surface (C). Do not install the countershaft bearing higher than 0.05 mm (0.002 in.) above the torque converter housing surface.

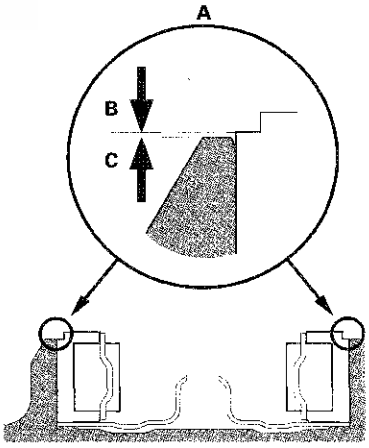

Secondary Shaft Bearing Replacement

Special Tools Required
- Driver 07749-0010000
- Attachment, 62 x 68 mm 07746-0010500

1. Remove the set plate bolt, then remove the lock washer (A) and the bearing set plate (B).

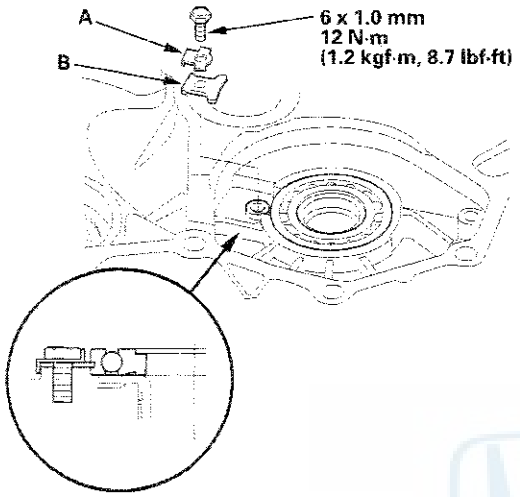

2. Remove the secondary shaft bearing (A) by heating the torque converter housing to about 212 °F (100 °C) using a heat gun (B). Do not heat the torque converter housing more than 212 °F (100 °C).

   NOTE: Let the torque converter housing cool to normal temperature before installing the secondary shaft bearing.

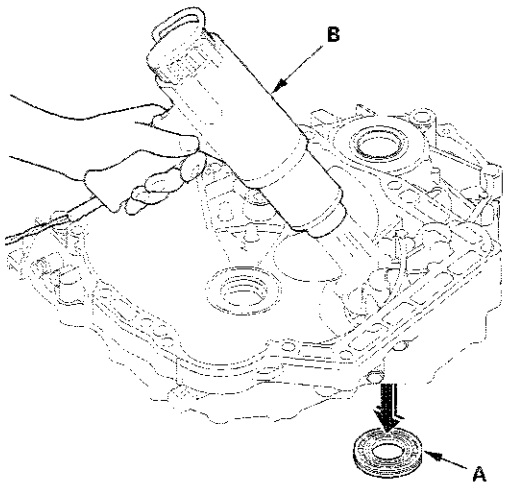

3. Remove the ATF guide collar with the O-rings. Clean and dry the ATF guide collar surfaces and the torque converter housing if necessary.

4. Install new O-rings (A) on the ATF guide collar (B), then install the ATF guide collar in the torque converter housing.

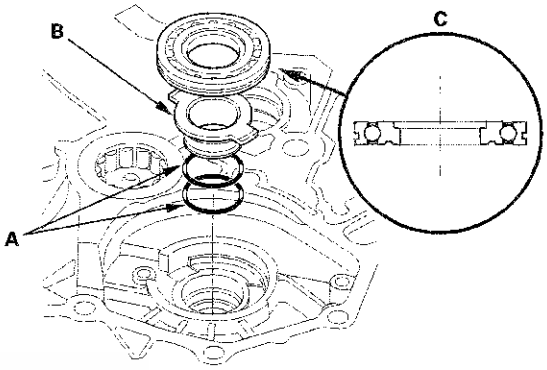

5. Install a new secondary shaft bearing (C) in the direction shown.

6. Install the secondary shaft bearing using the driver and the 62 x 68 mm attachment, and install it securely in the torque converter housing.

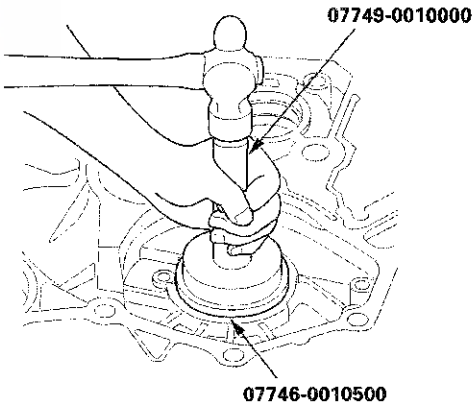

7. Check that the bearing groove aligns with the torque converter housing surface, then install the bearing set plate with aligning the bearing groove.

8. Install a new lock washer and set plate bolt, then bend the lock tab of the lock washer against the bolt head.

Selector Control Shaft Oil Seal Replacement

Special Tools Required
- Driver 07749-0010000
- Oil seal driver attachment 07947-ZV00100

1. Remove the oil seal (A) from the torque converter housing (B).

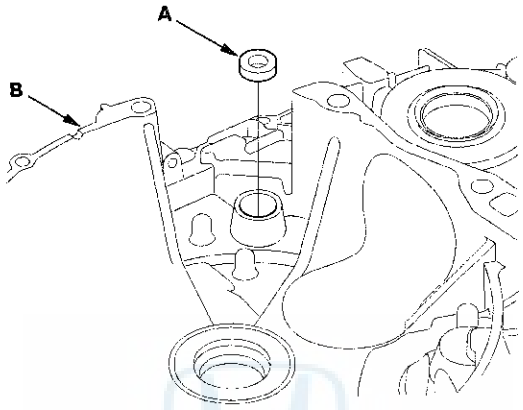

2. Install a new oil seal (A) in the torque converter housing to a depth (B) of 0.5—1.5 mm (0.02—0.06 in.) below the torque converter housing surface using the driver and the oil seal driver attachment.

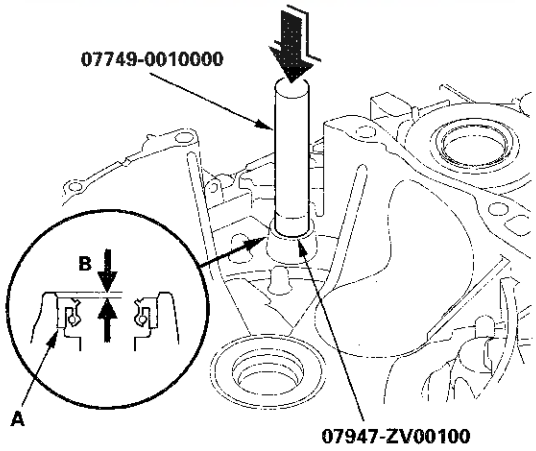

Mainshaft Disassembly, Inspection, and Reassembly

1. Inspect the thrust needle bearings and the needle bearings for galling and rough movement.

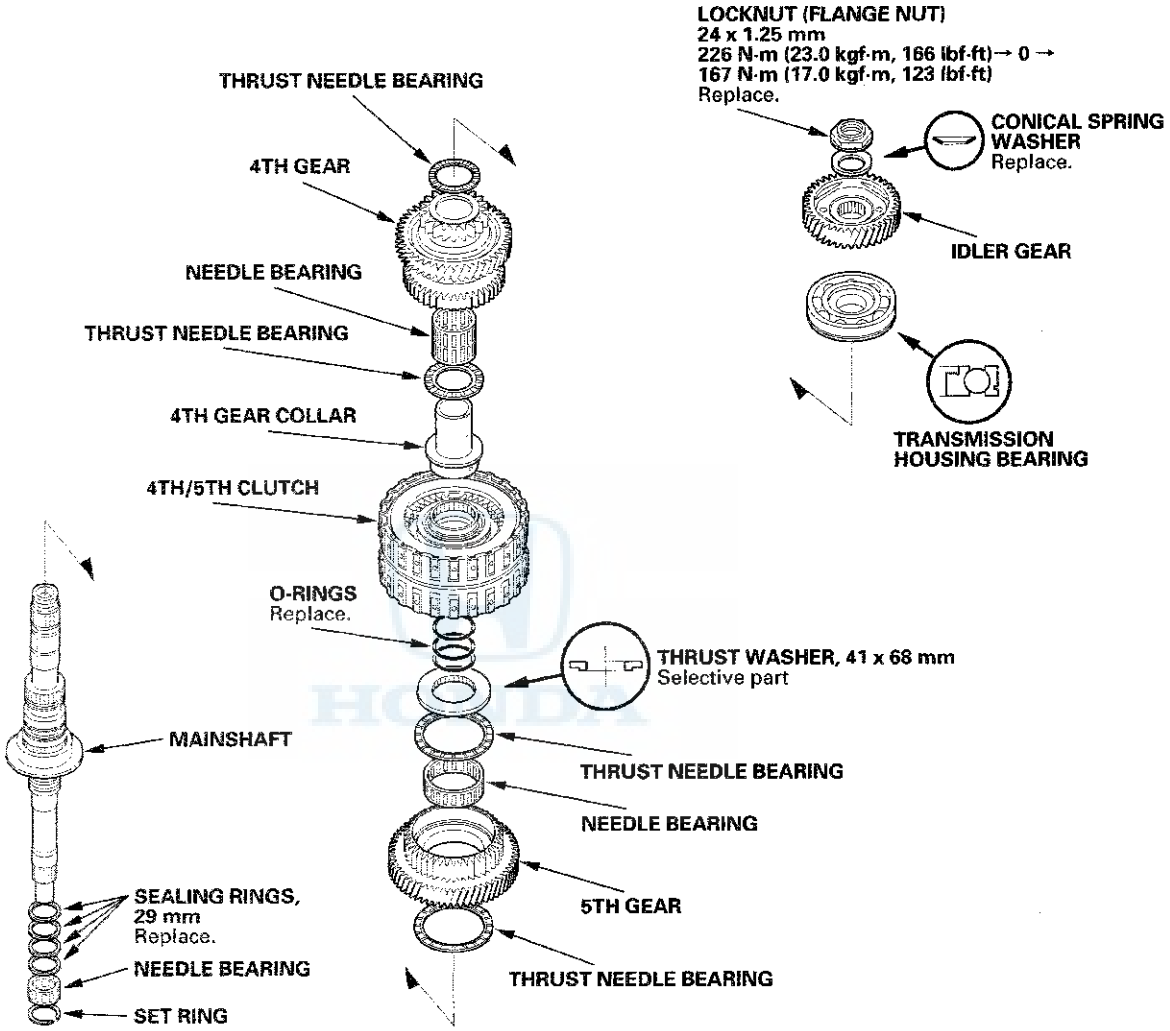

2. Inspect the splines for excessive wear and damage.
3. Check the shaft bearing surface for scoring and excessive wear.
4. Before installing new O-rings, wrap the shaft splines with tape to prevent the O-ring damage.
5. Lubricate all parts with ATF during assembly.
6. Install the conical spring washer and the 41 x 68 mm thrust washer in the direction shown.
7. Replace the locknut and the conical spring washer with new ones when assembling the transmission.
8. Check the clearance of 5th gear (see page 14-332).

Mainshaft 5th Gear Axial Clearance Inspection

1. Remove the mainshaft transmission housing bearing (see page 14-315).

2. Install the thrust needle bearing (A), 5th gear (B), the needle bearing (C), the thrust needle bearing (D), the 41 x 68 mm thrust washer (E), the 4th/5th clutch (F), the 4th gear collar (G), and the transmission housing bearing (H) on the mainshaft (I). Do not install the O-rings during inspection.

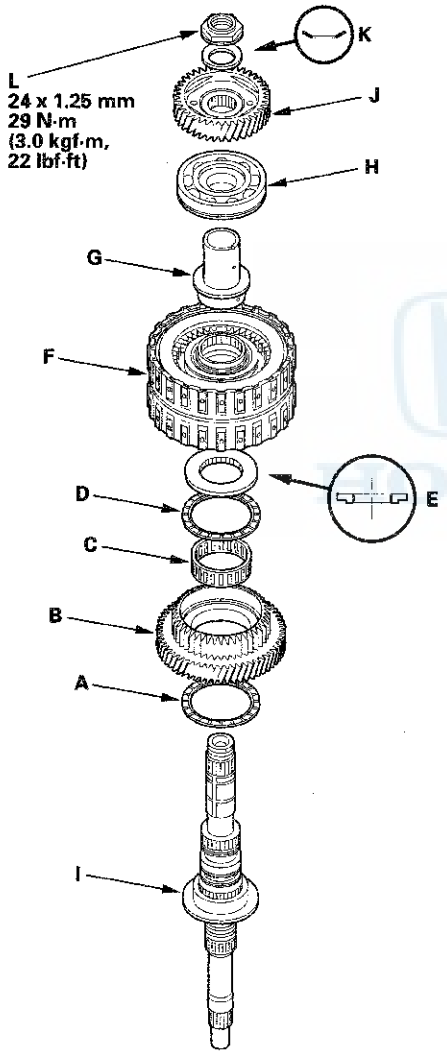

3. Install the idler gear (J) on the mainshaft with a press, then install the conical spring washer (K) and the locknut (L).

4. Tighten the locknut to 29 N·m (3.0 kgf·m, 22 lbf·ft).

5. Set the dial indicator (A) on 5th gear (B).

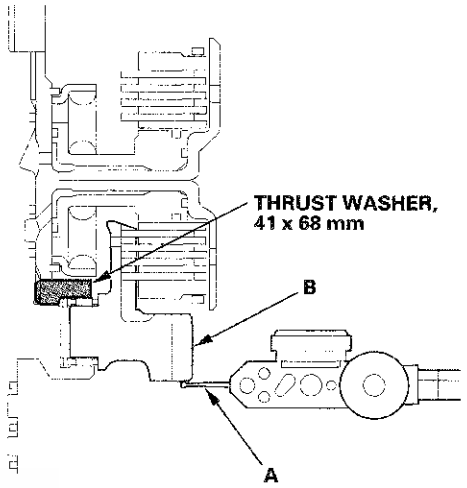

6. Lift 5th gear (A) up while holding the mainshaft, and use the dial indicator (B) to read the 5th gear axial clearance.

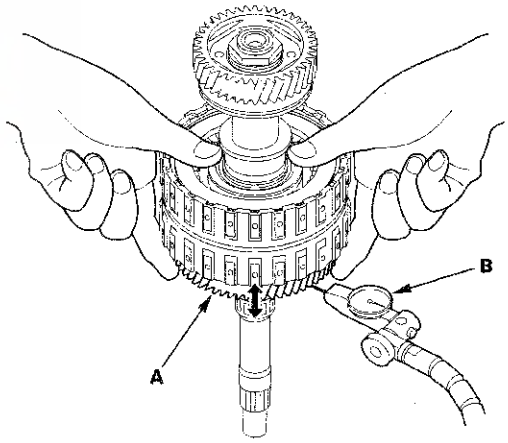

7. Measure the 5th gear axial clearance in at least three places while moving 5th gear. Use the average as the actual clearance.

Standard: 0.04—0.10 mm (0.002—0.004 in.)

8. If the clearance is out of standard, remove the 41 x 68 mm thrust washer and measure its thickness (A).

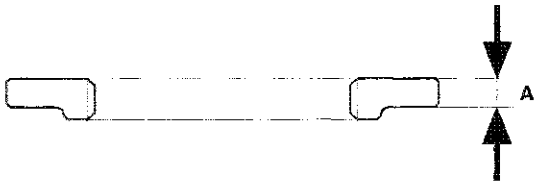

9. Select and install a new thrust washer, then recheck.

THRUST WASHER, 41 x 68 mm

No.	Part Number	Thickness
1	90414-RCT-000	4.450 mm (0.1752 in.)
2	90415-RCT-000	4.475 mm (0.1762 in.)
3	90416-RCT-000	4.500 mm (0.1772 in.)
4	90417-RCT-000	4.525 mm (0.1781 in.)
5	90418-RCT-000	4.550 mm (0.1791 in.)
6	90419-RCT-000	4.575 mm (0.1801 in.)
7	90420-RCT-000	4.600 mm (0.1811 in.)
8	90421-RCT-000	4.625 mm (0.1821 in.)
9	90422-RCT-000	4.650 mm (0.1831 in.)
10	90423-RCT-000	4.675 mm (0.1841 in.)
11	90424-RCT-000	4.700 mm (0.1850 in.)
12	90425-RCT-000	4.725 mm (0.1860 in.)
13	90426-RCT-000	4.750 mm (0.1870 in.)
14	90427-RCT-000	4.775 mm (0.1880 in.)
15	90428-RCT-000	4.800 mm (0.1890 in.)

10. After replacing the thrust washer, make sure the clearance is within the standard.

11. Disassemble the installed parts from the mainshaft.

12. Reinstall the transmission housing bearing in the transmission housing (see page 14-316).

Countershaft Disassembly, Inspection, and Reassembly

1. Inspect the needle bearings for galling and rough movement.

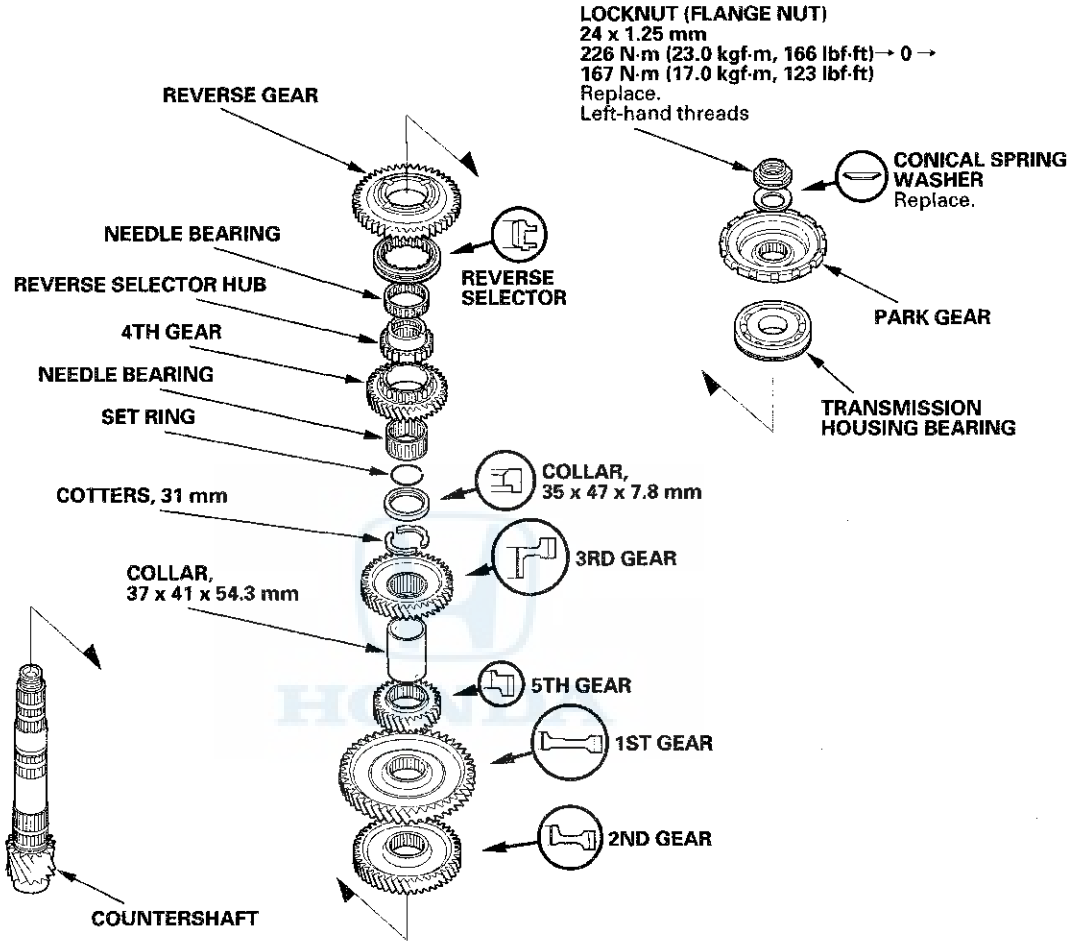

2. Inspect the splines for excessive wear and damage.

3. Check the shaft bearing surface for scoring and excessive wear.

4. Lubricate all parts with ATF during assembly.

5. Install the conical spring washer, the reverse selector, the 35 x 47 x 7.8 mm collar, and all gears in the direction shown.

6. Replace the locknut and the conical spring washer with new ones when assembling the transmission. The countershaft locknut has left-hand threads.

7. Some reverse selector hubs and 3rd gears are press-fitted to the countershaft; special tools are needed to remove them (see page 14-335) and to install them (see page 14-336).

Countershaft Reverse Selector Hub and 3rd Gear Removal

1. Install a commercially available bearing separator on 4th gear (A). Set the countershaft (B) on a press with a spacer (C) between the press and the countershaft, and remove the reverse selector hub (D).

   NOTE: Some reverse selector hubs are not press-fitted, and can be removed without using the bearing separator and a press.

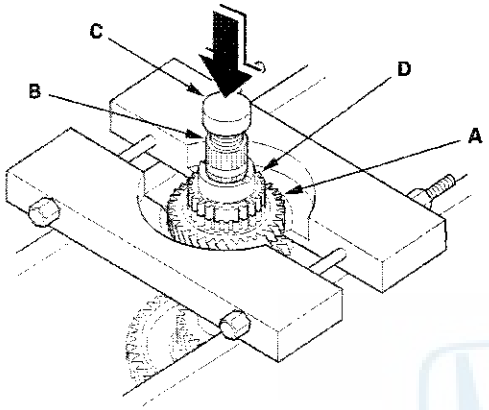

2. Remove the needle bearing, the set ring, the 35 x 47 x 7.8 mm collar, and the 31 mm cotters.

3. Set the countershaft (A) on a press with a spacer (B) between the press and the countershaft, and remove 3rd gear (C).

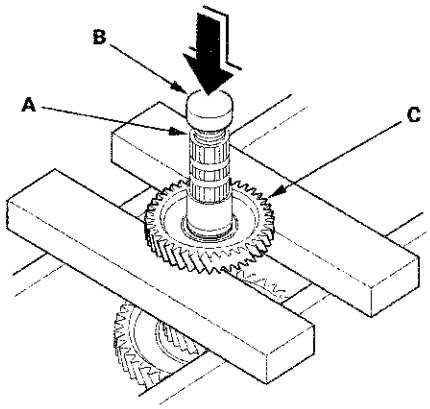

4. Remove the 37 x 41 x 54.3 mm collar, 5th gear, 1st gear, and 2nd gear.

Countershaft 3rd Gear and Reverse Selector Hub Installation

Special Tools Required
Driver handle, 40 mm I.D. 07746-0030100

1. Install 2nd gear, 1st gear, 5th gear, and the 37 x 41 x 54.3 mm collar on the countershaft.

2. Slide 3rd gear (A) over the countershaft, and press it in place using the 40 mm driver and a press.

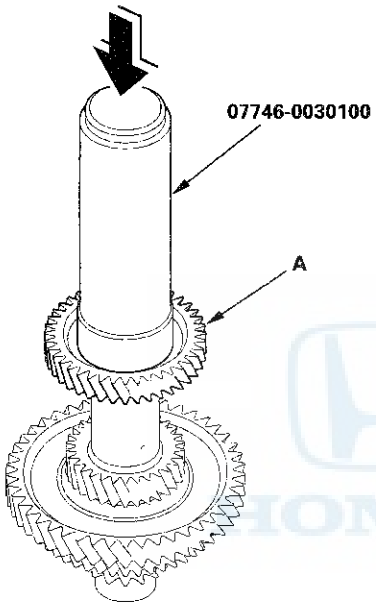

3. Install the 31 mm cotters, the 35 x 47 x 7.8 mm collar, the set ring, the needle bearing, and 4th gear.

4. Slide the reverse selector hub (A) over the countershaft, then press it in place using the 40 mm driver and a press.

   NOTE: Some reverse selector hubs are not press-fitted, and can be installed without using the 40 mm driver and a press.

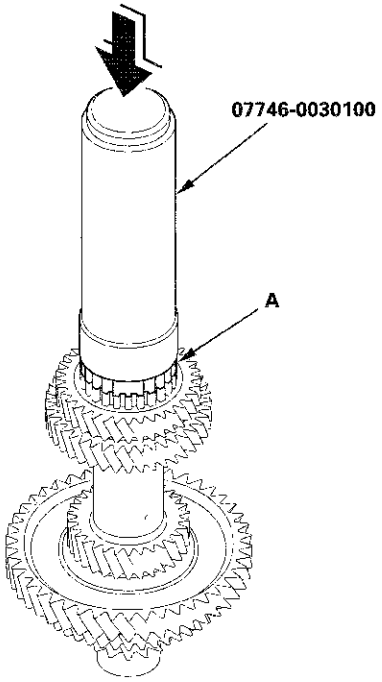

Secondary Shaft Disassembly, Inspection, and Reassembly

1. Inspect the thrust needle bearings and the needle bearings for galling and rough movement.

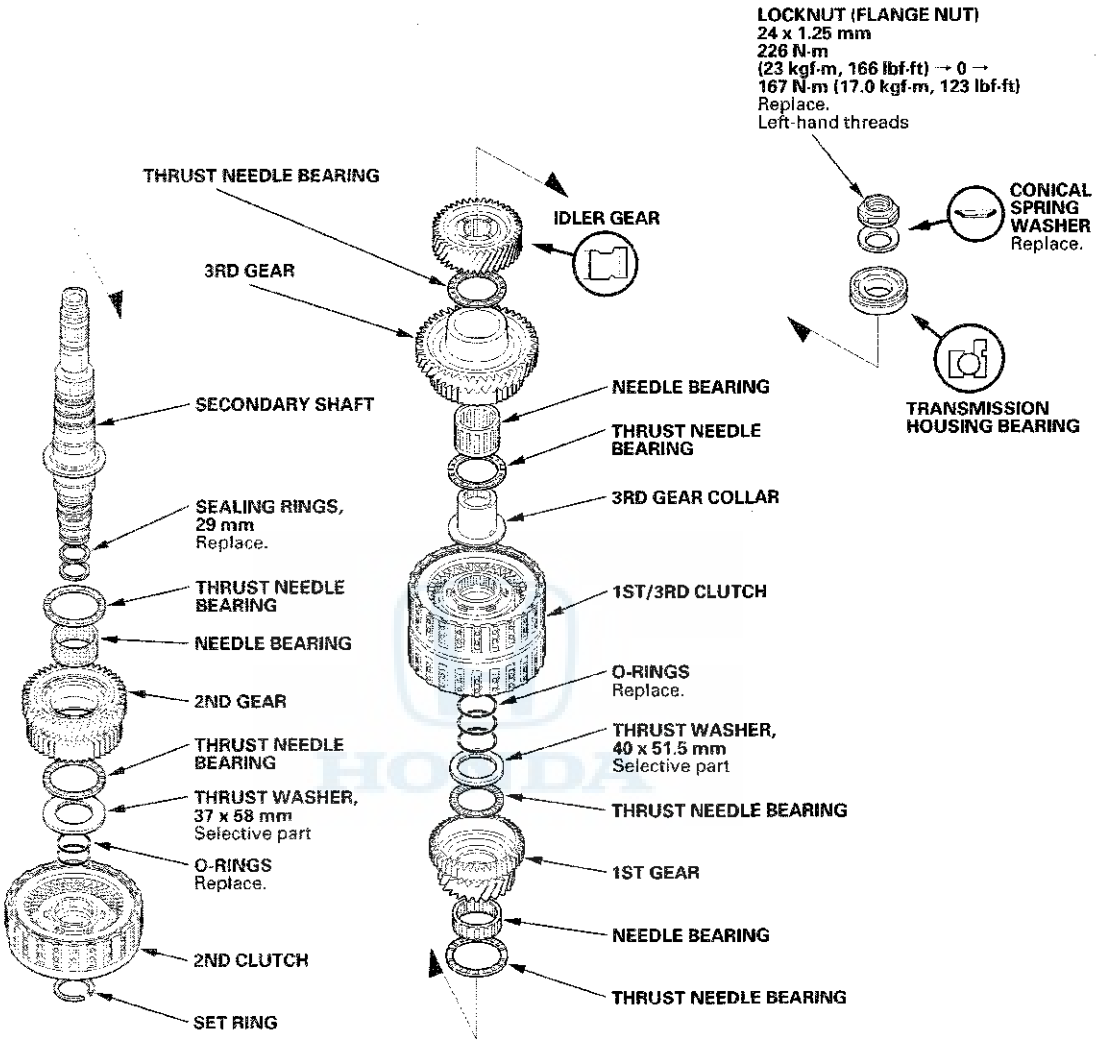

2. Inspect the splines for excessive wear and damage.

3. Check the shaft bearing surface for scoring and excessive wear.

4. Before installing new O-rings, wrap the shaft splines with tape to prevent O-ring damage.

5. Lubricate all parts with ATF during assembly.

6. Install the conical spring washer, and the idler gear in the direction shown.

7. Replace the locknut and the conical spring washer with new ones when assembling the transmission. The locknut has left-hand threads.

8. Check the clearance of 2nd gear (see page 14-339) and 1st gear (see page 14-340).

Secondary Shaft Idler Gear Removal and Installation

Special Tools Required
Attachment, 42 mm I.D. 07QAD-P0A0100

Removal

Place a spacer (A) on the secondary shaft (B), and set a puller (C) under the idler gear (D), then remove the idler gear.

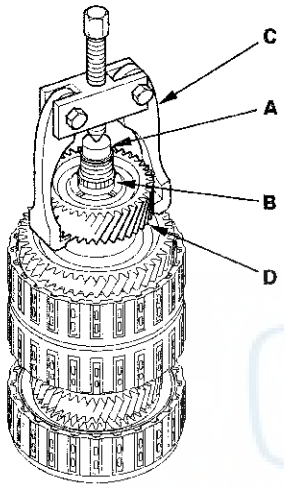

Installation

Install the idler gear (A) in the direction shown on the secondary shaft (B) using the 42 mm attachment and a press.

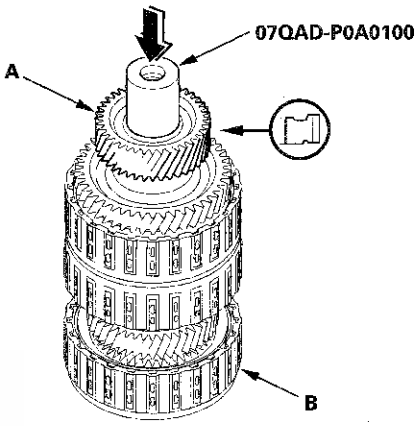

Secondary Shaft 2nd Gear Axial Clearance Inspection

1. Install the thrust needle bearing (A), the needle bearing (B), 2nd gear (C), the thrust needle bearing (D), the 37 x 58 mm thrust washer (E), and the 2nd clutch (F) on the secondary shaft (G), then secure them with the set ring (H). Do not install the O-rings during inspection.

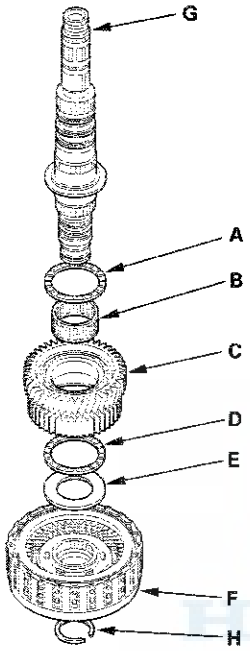

2. Measure the clearance between the set ring (A) and the 2nd clutch guide (B) using a feeler gauge (C), in at least three places. Use the average as the actual clearance.

Standard: 0.04—0.12 mm (0.002—0.005 in.)

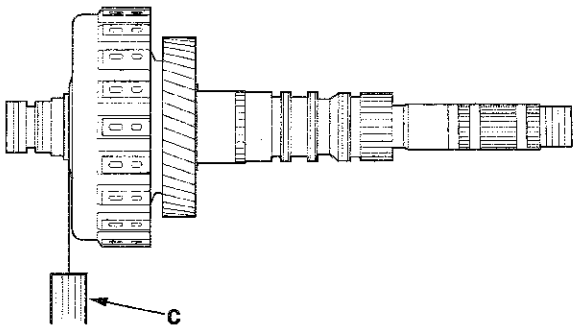

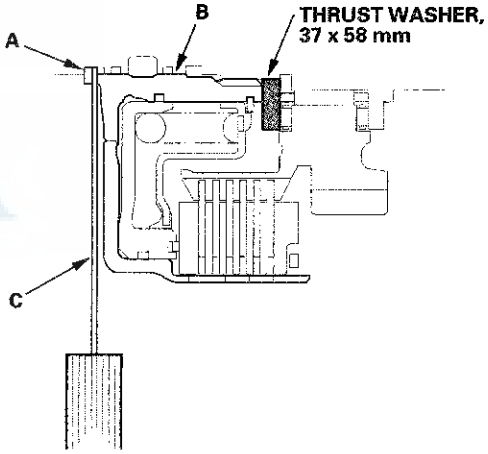

(cont'd)

Secondary Shaft 2nd Gear Axial Clearance Inspection (cont'd)

3. If the clearance is out of standard, remove the 37 x 58 mm thrust washer, and measure its thickness.

4. Select and install a new thrust washer, then recheck.

THRUST WASHER, 37 x 58 mm

No.	Part Number	Thickness
1	90511-PRP-010	3.900 mm (0.154 in.)
2	90512-PRP-010	3.925 mm (0.155 in.)
3	90513-PRP-010	3.950 mm (0.156 in.)
4	90514-PRP-010	3.975 mm (0.156 in.)
5	90515-PRP-010	4.000 mm (0.157 in.)
6	90516-PRP-010	4.025 mm (0.158 in.)
7	90517-PRP-010	4.050 mm (0.159 in.)
8	90518-PRP-010	4.075 mm (0.160 in.)
9	90519-PRP-010	4.100 mm (0.161 in.)
10	90520-PRP-010	4.125 mm (0.162 in.)
11	90521-PRP-010	4.150 mm (0.163 in.)
12	90522-PRP-010	4.175 mm (0.164 in.)
13	90523-PRP-000	4.200 mm (0.165 in.)
14	90524-PRP-000	4.225 mm (0.166 in.)
15	90525-PRP-000	4.250 mm (0.167 in.)
16	90526-PRP-000	4.275 mm (0.168 in.)
17	90527-PRP-000	4.300 mm (0.169 in.)
18	90528-PRP-000	4.325 mm (0.170 in.)
19	90529-PRP-000	4.350 mm (0.171 in.)
20	90530-PRP-000	4.375 mm (0.172 in.)

5. After replacing the thrust washer, make sure the clearance is within standard.

6. Disassemble the installed parts from the secondary shaft.

Secondary Shaft 1st Gear Axial Clearance Inspection

Special Tools Required
Attachment, 42 mm I.D. 07QAD-P0A0100

1. Remove the secondary shaft transmission housing bearing (see page 14-315).

2. Install the thrust needle bearing (A), the needle bearing (B), 1st gear (C), the thrust needle bearing (D), the 40 x 51.5 mm thrust washer (E), the 1st/3rd clutch (F), and the 3rd gear collar (G) on the secondary shaft (H). Do not install the O-rings during inspection.

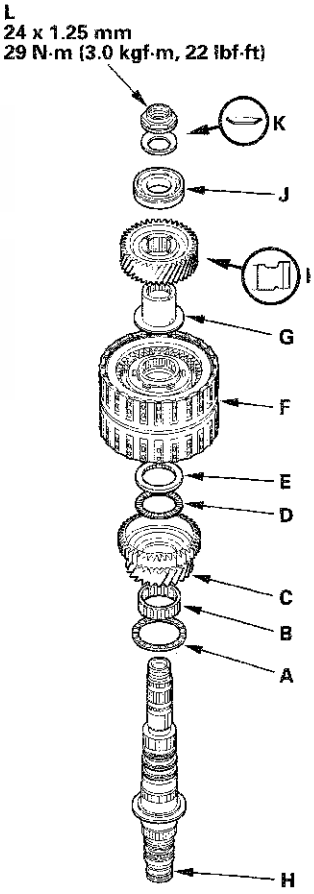

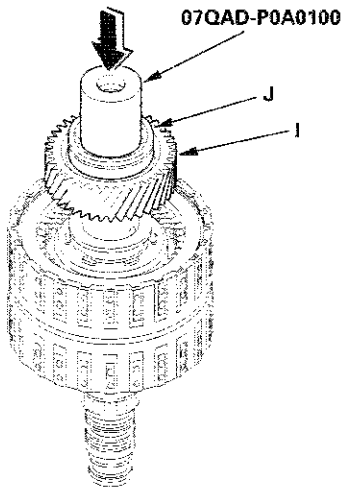

3. Install the idler gear (I), then install the transmission housing bearing (J) on the idler gear using the 42 mm I.D. attachment and a press.

4. Install the conical spring washer (K) and the locknut (L), then tighten the locknut to 29 N·m (3.0 kgf·m, 22 lbf·ft).

5. Turn the secondary shaft assembly upside down, and set the dial indicator (A) on 1st gear (B).

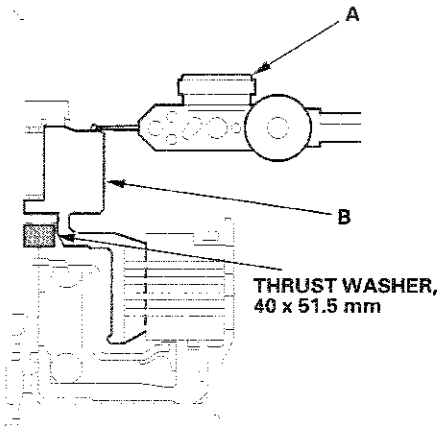

6. Lift 1st gear (A) up while holding the secondary shaft, and use the dial indicator (B) to read the 1st gear axial clearance.

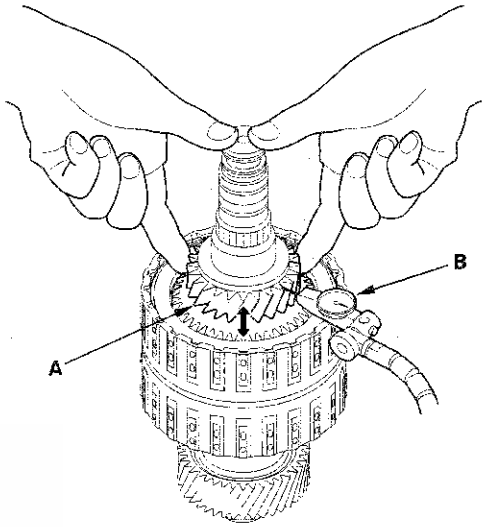

7. Measure the 1st gear axial clearance in at least three places while moving 1st gear. Use the average as the actual clearance.

Standard: 0.04—0.12 mm (0.002—0.005 in.)

(cont'd)

Secondary Shaft 1st Gear Axial Clearance Inspection (cont'd)

8. If the clearance is out of standard, remove the 40 x 51.5 mm thrust washer and measure its thickness.

9. Select and install a new thrust washer, then recheck.

THRUST WASHER, 40 x 51.5 mm

No.	Part Number	Thickness
1	90503-RCT-000	4.80 mm (0.189 in.)
2	90504-RCT-000	4.85 mm (0.191 in.)
3	90505-RCT-000	4.90 mm (0.193 in.)
4	90506-RCT-000	4.95 mm (0.195 in.)
5	90507-RCT-000	5.00 mm (0.197 in.)
6	90508-RCT-000	5.05 mm (0.199 in.)

10. After replacing the thrust washer, make sure the clearance is within standard.

11. Disassemble the installed parts from the secondary shaft.

12. Reinstall the transmission housing bearing in the transmission housing (see page 14-316).

Idler Gear Shaft Removal and Installation

1. Remove the snap ring (A), the cotter retainer (B), and the 17 mm cotters (C). Do not distort the snap ring.

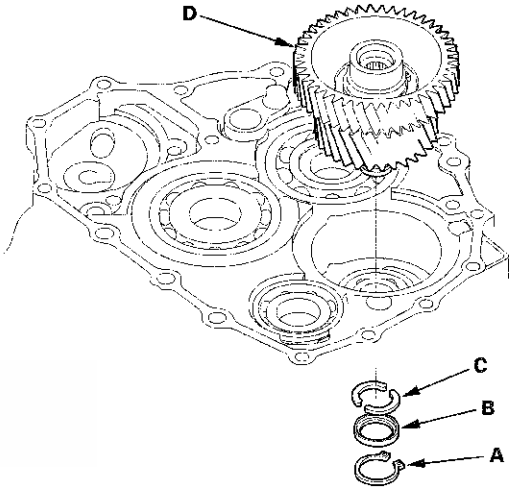

2. Remove the idler gear shaft/idler gear assembly (D) from the transmission housing.

3. Check the snap ring and the cotter retainer for wear and damage. Replace them if they are worn, distorted, or damaged.

4. Install the idler gear shaft/idler gear assembly in the reverse order of removal.

Idler Gear/Idler Gear Shaft Replacement

Special Tools Required
- Driver 07749-0010000
- Attachment, 32 x 35 mm 07746-0010100

1. Remove the snap ring from the idler gear/idler shaft assembly. Do not distort the snap ring.

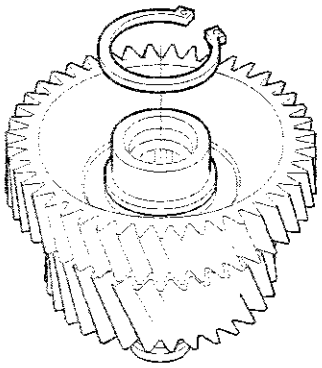

2. Check the snap ring for wear and damage. Replace it if it is worn, distorted, or damaged.

3. Remove the idler gear shaft (A) from the idler gear (B) using the driver, the 32 x 35 mm attachment, and a press.

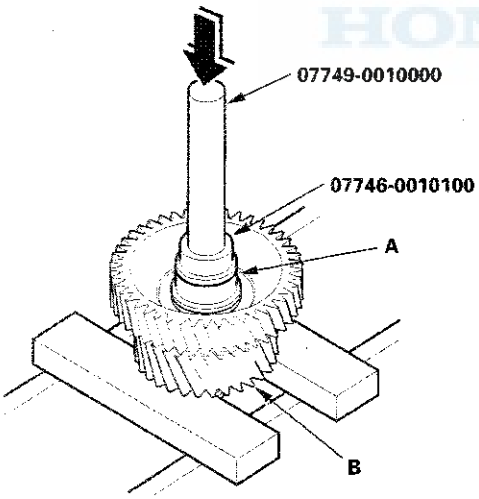

4. Replace the idler gear and/or the idler gear shaft, and attach the idler gear shaft to the idler gear.

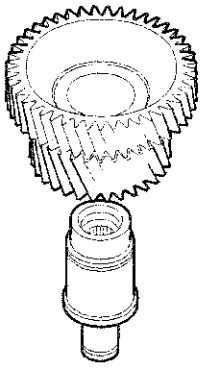

5. Install the idler gear shaft (A) in the idler gear (B) using the driver, the 32 x 35 mm attachment, and a press.

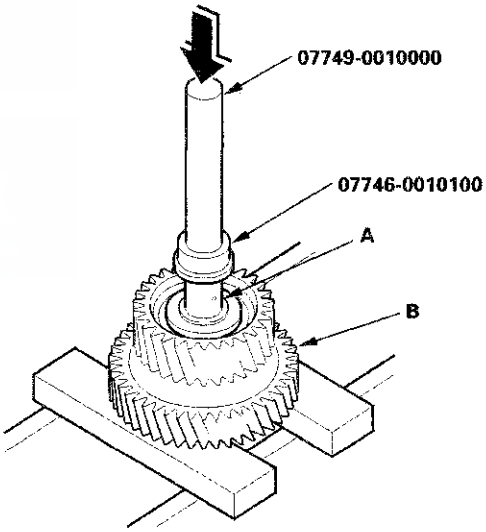

6. Install the snap ring.

Clutch Disassembly

Special Tools Required
Clutch spring compressor set 07LAE-PX40000

1. Remove the snap ring using a screwdriver.

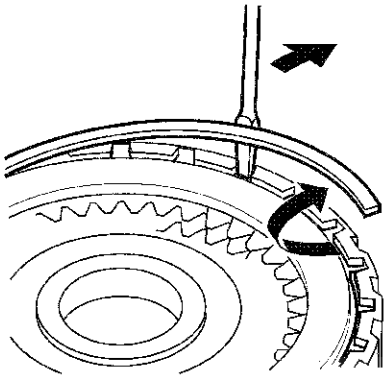

2. Remove the clutch end-plate (A), the clutch discs (B) (5), the clutch wave-plates (C) (4), the clutch flat-plate (D), and the waved spring (E) from the 1st clutch drum (F).

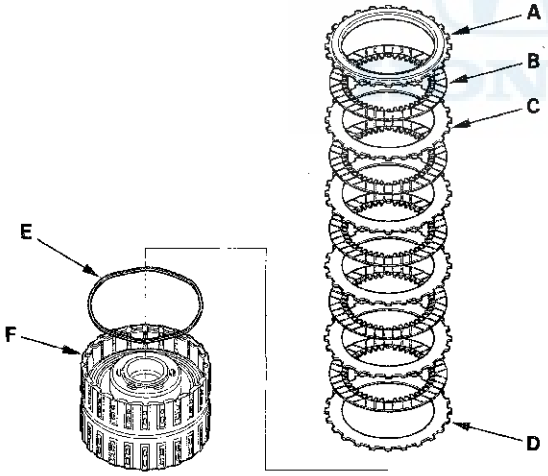

3. Make a reference mark on the clutch flat-plate.

4. Remove the clutch end-plate (A), the clutch discs (B) (6), the clutch wave-plates (C) (5), the flat-plate (D), and the waved spring (E) from the 2nd clutch drum (F).

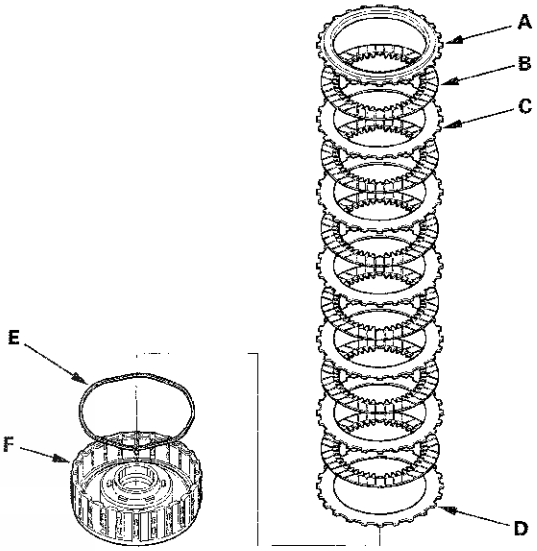

5. Make a reference mark on the flat-plate.

6. Remove the clutch end-plate (A), the clutch discs (B) (6), the clutch wave-plates (C) (5), the clutch flat-plate (D), and the waved spring (E) from the 3rd clutch drum (F).

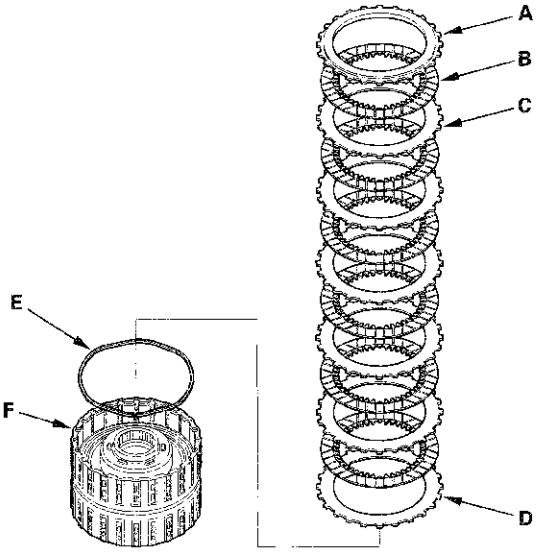

7. Make reference marks on the clutch flat-plate.

8. Remove the clutch end-plate (A), the clutch discs (B) (4), the clutch wave-plates (C) (4), and the waved spring (D) from the 4th clutch drum (E).

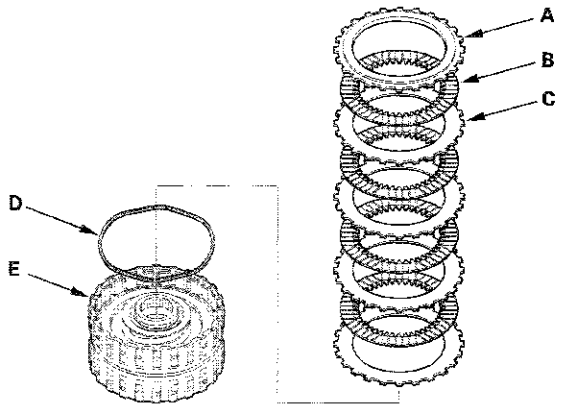

9. Remove the clutch end-plate (A), the clutch discs (B) (4), the clutch wave-plates (C) (4), and the waved spring (D) from the 5th clutch drum (E).

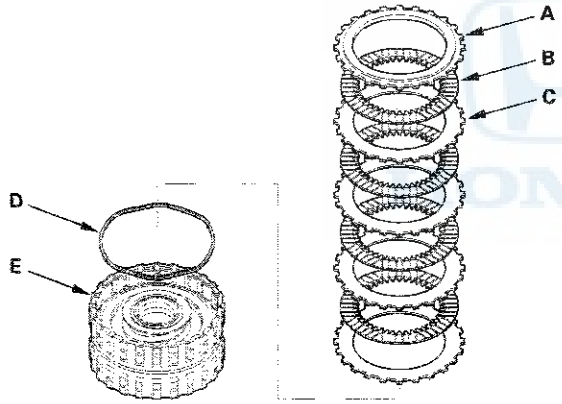

10. Install the clutch spring compressor set.

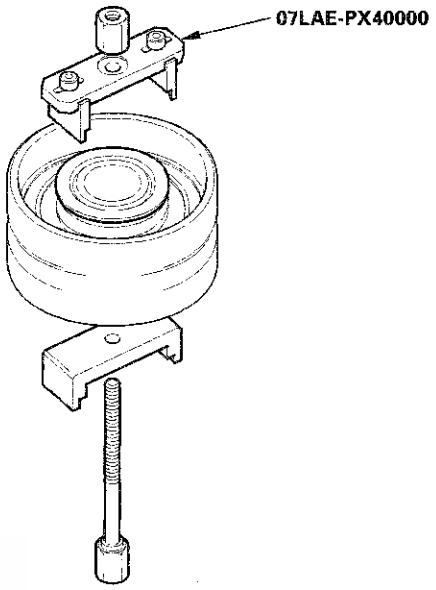

11. Set the clutch spring compressor attachment (A) on the spring retainer (B) of the 1st, 2nd, and 3rd clutches so that it pushes on the clutch return spring (C).

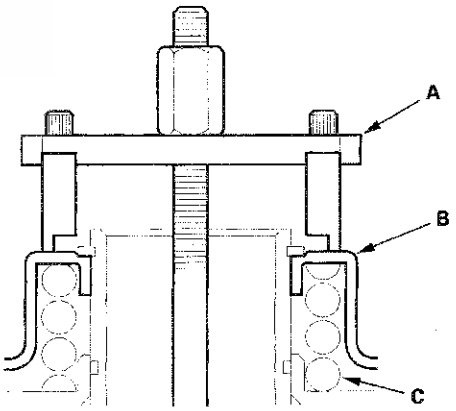

(cont'd)

Clutch Disassembly (cont'd)

12. Be sure the clutch spring compressor attachment (A) is adjusted to have full contact with the spring retainer (B) on the 4th and 5th clutches.

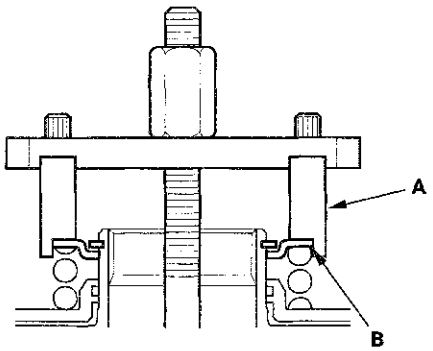

13. Check the placement of the clutch spring compressor attachment. If either end of the clutch spring compressor attachment is set over an area of the spring retainer which is unsupported by the return spring, the spring retainer may be damaged.

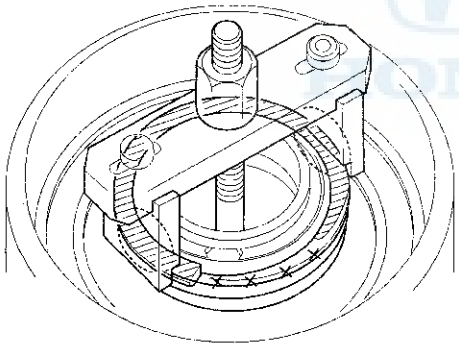

14. Compress the return spring until the snap ring can be removed.

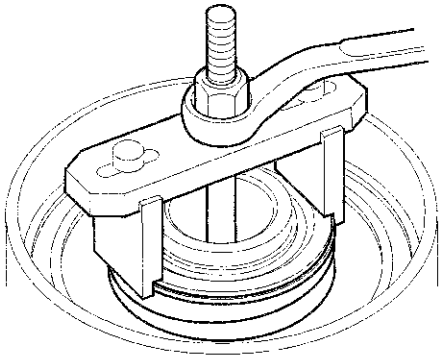

15. Remove the snap ring using snap ring pliers.

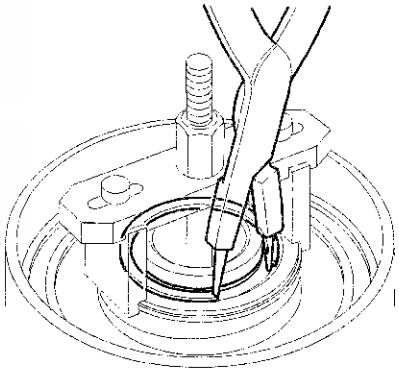

16. Remove the clutch spring compressor set.

17. Remove the snap ring (A), the spring retainer (B), and the return spring (C).

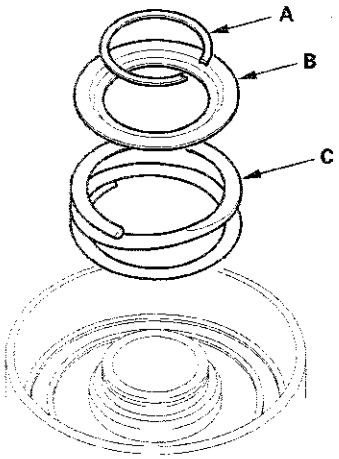

18. Wrap a shop rag around the clutch drum (A), and apply air pressure to the fluid passage to remove the piston (B). Place a finger tip on the other passage while applying air pressure.

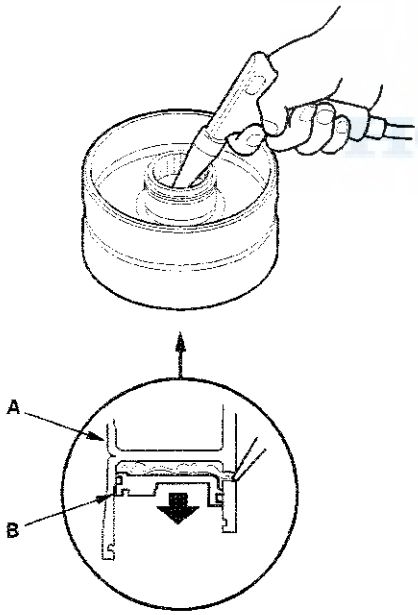

19. 1st, 2nd, and 3rd clutches:
Remove the clutch piston (A), remove the O-ring (B) from the piston, and remove the O-ring (C) from the clutch drum (D).

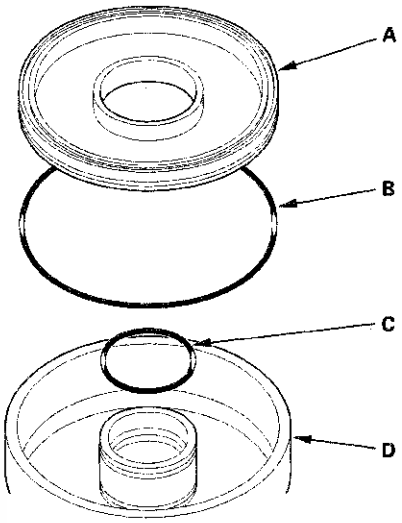

20. 4th and 5th clutches:
Remove the clutch piston (A), and remove the outer O-ring (B) and the inner O-ring (C) from the piston.

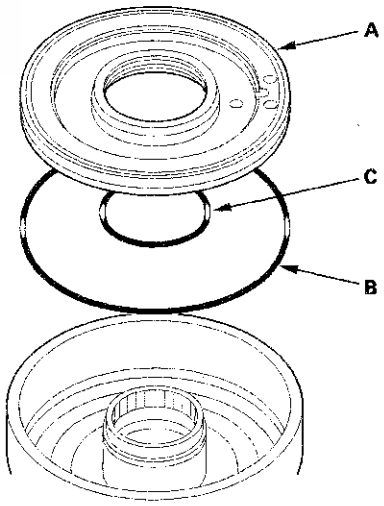

Clutch Inspection

1. Inspect the 4th and 5th clutch pistons and the clutch piston check valves (A).

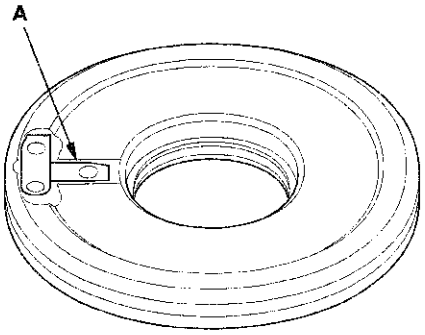

2. If the clutch piston check valve is loose or damaged, replace the clutch piston.

3. Check the spring retainer for wear and damage.

4. If the spring retainer is worn or damaged, replace it.

5. Check the oil seal (A) on the spring retainer of the 1st, 2nd, and 3rd clutches for wear, damage, and peeling.

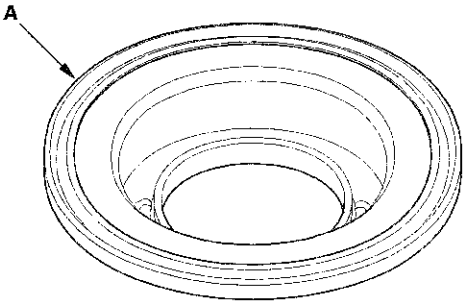

6. If the oil seal is worn, damaged, or peeling, replace the spring retainer.

7. Inspect the clutch discs, the clutch plates, and the clutch end-plate for wear, damage, and discoloration.

Clutch Discs for All Models
Standard Thickness: 1.94 mm (0.076 in.)

Clutch Plates
Standard Thickness:

1st Clutch	**Wave-plates:**	**1.6 mm (0.063 in.)**
	Flat-plates:	**1.6 mm (0.063 in.)**
2nd Clutch	**Wave-plates:**	**2.0 mm (0.079 in.)**
	Flat-plate:	**2.0 mm (0.079 in.)**
3rd Clutch	**Wave-plates:**	**1.6 mm (0.063 in.)**
	Flat-plates:	**1.6 mm (0.063 in.)**
4th Clutch (wave-plates):		**2.0 mm (0.079 in.)**
5th Clutch (wave-plates):		**2.0 mm (0.079 in.)**

8. If the clutch discs are worn or damaged, replace them as a set. If the clutch discs are replaced, do the clutch clearance inspection (see page 14-350).

9. If any plate is worn, damaged, or discolored, replace the damaged plate with a new plate, and inspect the other wave-plates for a phase difference (see page 14-349). If the clutch plate is replaced, do the clutch clearance inspection (see page 14-350).

10. If the clutch end-plate is worn, damaged, or discolored, do the clutch clearance inspection (see page 14-350), then replace the clutch end-plate.

Clutch Wave-plate Phase Difference Inspection

1. Place the clutch wave-plate (A) on a surface plate, and set a dial indicator (B) on the wave-plate.

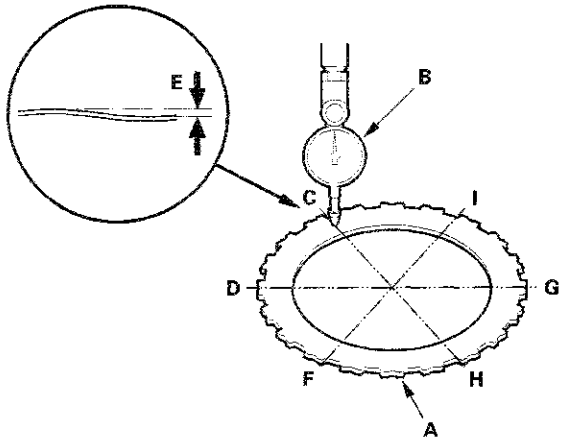

2. Find the bottom (C) of a phase difference of the wave-plate, zero the dial indicator and make a reference mark on the bottom of the wave-plate.

3. Rotate the wave-plate about 60-degrees apart from the bottom while holding the wave-plate by its edges. The dial indicator should be at the top (D) of a phase difference. Do not rotate the wave-plate while holding its surface, always rotate it while holding its edges.

4. Read the dial indicator. The dial indicator reads the phase difference (E) of the wave-plate between bottom and top.

   Standard Phase Difference:
   1st Clutch: 0.15—0.20 mm (0.006—0.008 in.)
   2nd Clutch: 0.1—0.2 mm (0.004—0.008 in.)
   3rd Clutch: 0.1—0.2 mm (0.004—0.008 in.)
   4th Clutch: 0.1—0.2 mm (0.004—0.008 in.)
   5th Clutch: 0.1—0.2 mm (0.004—0.008 in.)

5. Rotate the wave-plate about 60-degrees. The dial indicator should be at the bottom of a phase difference (F and G), and zero the dial indicator.

6. Measure the phase difference at the other two tops (H and I) of the wave-plate by following steps 3 thru 5.

7. If two of the three measurements are within the standard, the wave-plate is OK. If two of the three measurements are out of the standard, replace the wave-plate.

Clutch Clearance Inspection

Special Tools Required
Clutch compressor attachment 07ZAE-PRP0100

1. Inspect the clutch piston, the clutch discs, the clutch plates, and the clutch end-plate for wear and damage (see page 14-348), and inspect the clutch wave-plate phase difference (see page 14-349), if necessary.

2. Install the clutch piston in the clutch drum. Do not install the O-rings during inspection.

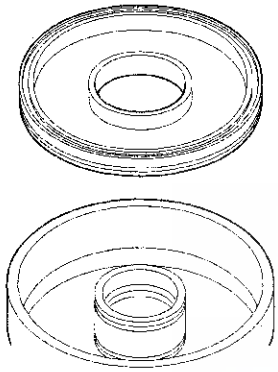

3. Install the waved spring (A) in the 1st clutch drum (B). Install the clutch flat-plate (C), then starting with the clutch disc, alternately install the clutch discs (D) (5) and the clutch wave-plates (E) (4), then install the clutch end-plate (F) with the flat side toward the top disc.

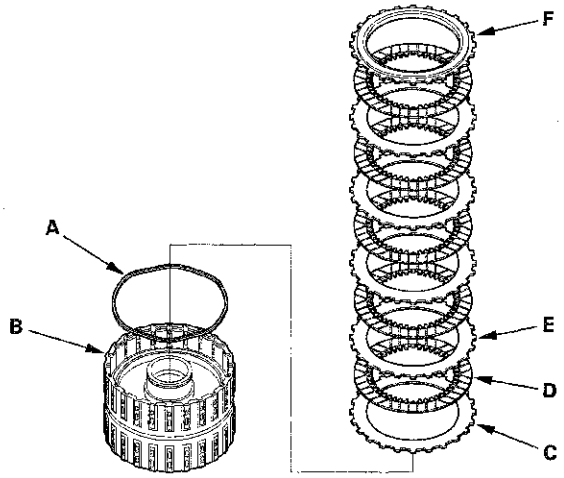

4. Install the waved spring (A) in the 2nd clutch drum (B). Install the flat-plate (C), then starting with the clutch disc, alternately install the clutch discs (D) (6) and the wave-plates (E) (5), then install the clutch end-plate (F) with the flat side toward the top disc.

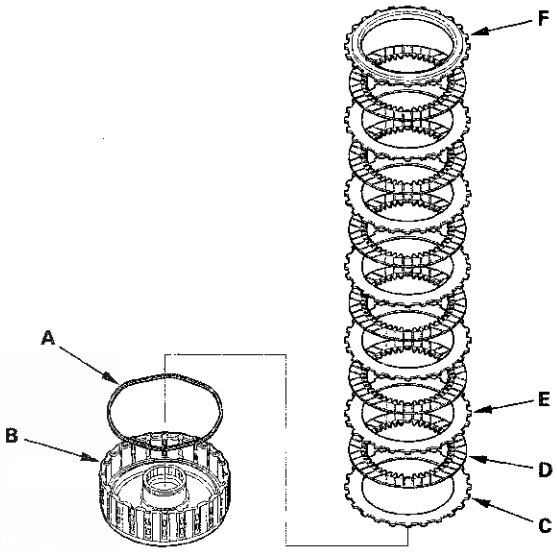

5. Install the waved spring (A) in the 3rd clutch drum (B). Install the clutch flat-plate (C), then starting with the clutch disc, alternately install the clutch discs (D) (6) and the clutch wave-plates (E) (5), then install the clutch end-plate (F) with the flat side toward the top disc.

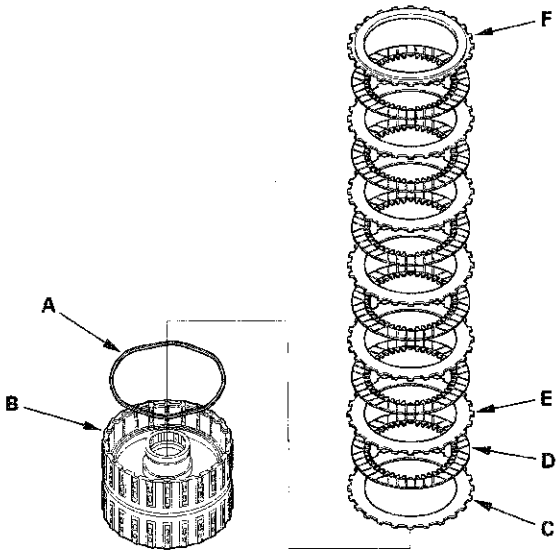

6. Install the waved spring (A) in the 4th clutch drum (B). Starting with the clutch wave-plate, alternately install the clutch wave-plates (C) (4) and the clutch discs (D) (4), then install the clutch end-plate (E) with the flat side toward the top disc.

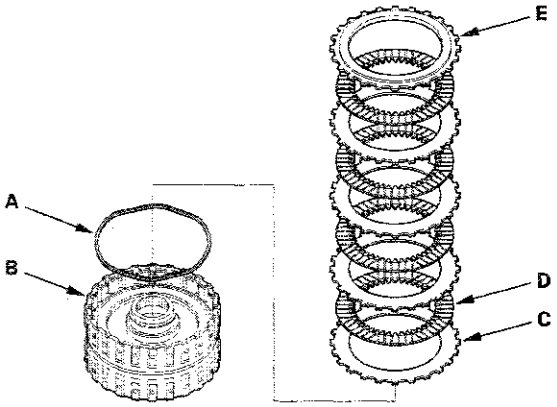

7. Install the waved spring (A) in the 5th clutch drum (B). Starting with the clutch wave-plate, alternately install the clutch wave-plates (C) (4) and the clutch discs (D) (4), then install the clutch end-plate (E) with the flat side toward the top disc.

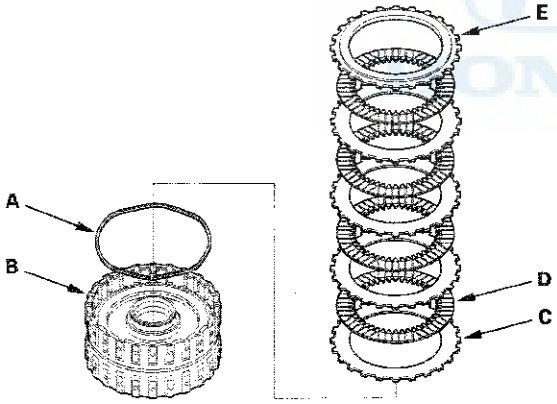

8. Install the snap ring using a screwdriver.

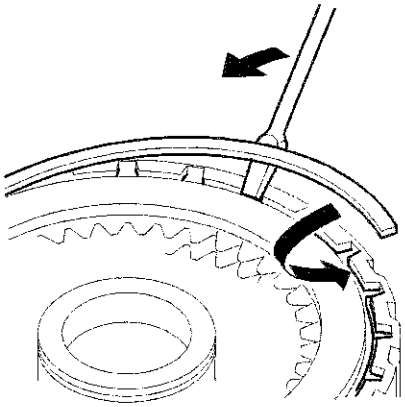

9. Set a dial indicator (A) on the clutch end-plate (B).

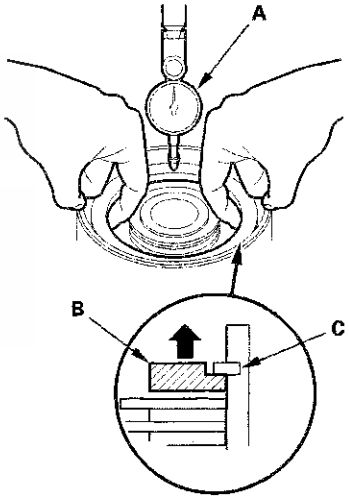

10. Zero the dial indicator with the clutch end-plate lifted up to the snap ring (C).

(cont'd)

Clutch Clearance Inspection (cont'd)

11. Release the clutch end-plate to lower the clutch end-plate, then put the clutch compressor attachment on the clutch end-plate (A).

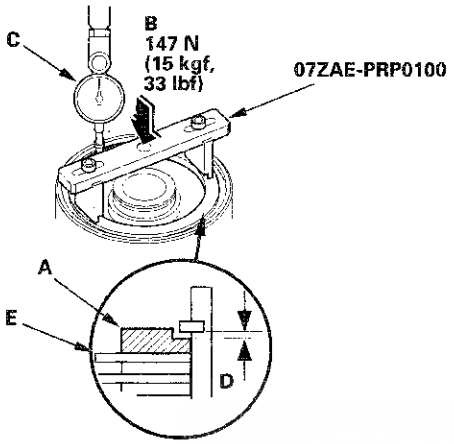

12. Press the clutch compressor attachment down with 147 N (15 kgf, 33 lbf) (B) using a force gauge, and read the dial indicator (C).

13. The dial indicator reads the clearance (D) between the clutch end-plate and the top disc (E). Take measurements in at least three places, and use the average as the actual clearance.

    Clearance between Clutch End-Plate and Top Disc
    Standard:
    1st Clutch: 1.38—1.58 mm (0.054—0.062 in.)
    2nd Clutch: 1.14—1.34 mm (0.045—0.053 in.)
    3rd Clutch: 1.23—1.43 mm (0.048—0.056 in.)
    4th Clutch: 0.93—1.13 mm (0.037—0.044 in.)
    5th Clutch: 0.93—1.13 mm (0.037—0.044 in.)

14. If the clearance is out of the standard, select a new clutch end-plate from the following table.

1ST CLUTCH END-PLATES

Mark	Part Number	Thickness (t)
1	22571-R90-003 or 22571-RZH-003	2.6 mm (0.102 in.)
2	22572-R90-003 or 22572-RZH-003	2.7 mm (0.106 in.)
3	22573-R90-003 or 22573-RZH-003	2.8 mm (0.110 in.)
4	22574-R90-003 or 22574-RZH-003	2.9 mm (0.114 in.)
5	22575-R90-003 or 22575-RZH-003	3.0 mm (0.118 in.)
6	22576-R90-003 or 22576-RZH-003	3.1 mm (0.122 in.)
7	22577-R90-003 or 22577-RZH-003	3.2 mm (0.126 in.)
8	22578-R90-003 or 22578-RZH-003	3.3 mm (0.130 in.)
9	22579-R90-003 or 22579-RZH-003	3.4 mm (0.134 in.)

2ND CLUTCH END-PLATES

Mark	Part Number	Thickness (t)
10	22569-R90-003 or 22569-RZH-003	2.4 mm (0.094 in.)
11	22570-R90-003 or 22570-RZH-003	2.5 mm (0.098 in.)
1	22571-R90-003 or 22571-RZH-003	2.6 mm (0.102 in.)
2	22572-R90-003 or 22572-RZH-003	2.7 mm (0.106 in.)
3	22573-R90-003 or 22573-RZH-003	2.8 mm (0.110 in.)
4	22574-R90-003 or 22574-RZH-003	2.9 mm (0.114 in.)
5	22575-R90-003 or 22575-RZH-003	3.0 mm (0.118 in.)
6	22576-R90-003 or 22576-RZH-003	3.1 mm (0.122 in.)
7	22577-R90-003 or 22577-RZH-003	3.2 mm (0.126 in.)

3RD CLUTCH END-PLATES

Mark	Part Number	Thickness (t)
1	22551-R90-003 or 22551-RZH-003	2.1 mm (0.083 in.)
2	22552-R90-003 or 22552-RZH-003	2.2 mm (0.087 in.)
3	22553-R90-003 or 22553-RZH-003	2.3 mm (0.091 in.)
4	22554-R90-003 or 22554-RZH-003	2.4 mm (0.094 in.)
5	22555-R90-003 or 22555-RZH-003	2.5 mm (0.098 in.)
6	22556-R90-003 or 22556-RZH-003	2.6 mm (0.102 in.)
7	22557-R90-003 or 22557-RZH-003	2.7 mm (0.106 in.)
8	22558-R90-003 or 22558-RZH-003	2.8 mm (0.110 in.)
9	22559-R90-003 or 22559-RZH-003	2.9 mm (0.114 in.)

4TH and 5TH CLUTCH END-PLATES

Mark	Part Number	Thickness (t)
1	22581-R90-003 or 22581-R91-003	2.1 mm (0.083 in.)
2	22582-R90-003 or 22582-R91-003	2.2 mm (0.087 in.)
3	22583-R90-003 or 22583-R91-003	2.3 mm (0.091 in.)
4	22584-R90-003 or 22584-R91-003	2.4 mm (0.094 in.)
5	22585-R90-003 or 22585-R91-003	2.5 mm (0.098 in.)
6	22586-R90-003 or 22586-R91-003	2.6 mm (0.102 in.)
7	22587-R90-003 or 22587-R91-003	2.7 mm (0.106 in.)
8	22588-R90-003 or 22588-R91-003	2.8 mm (0.110 in.)
9	22589-R90-003 or 22589-R91-003	2.9 mm (0.114 in.)

15. Install a new clutch end-plate, and recheck the clearance. If the thickest clutch end-plate is installed, but the clearance is still over the service limit, replace the clutch discs and the clutch plates.

1st, 2nd, and 3rd Clutch Reassembly

Special Tools Required
Clutch spring compressor set 07LAE-PX40000

NOTE: Hold the spring compressor attachment in a vise with soft jaws. Be careful not to damage the clutch drum.

1. Soak the clutch discs thoroughly in ATF for at least 30 minutes.

2. Install a new O-ring (A) in the 1st, 2nd, and 3rd clutch pistons (B), and install a new O-ring (C) on the clutch drums (D).

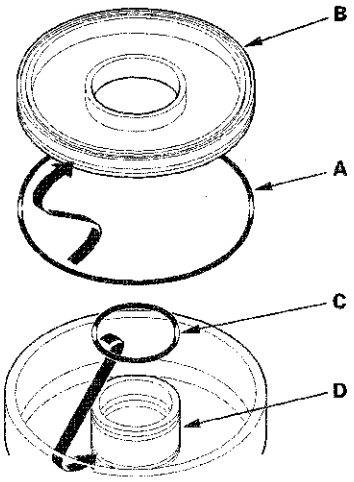

(cont'd)

1st, 2nd, and 3rd Clutch Reassembly (cont'd)

3. Install the clutch piston (A) in the clutch drum (B). Apply pressure and rotate to ensure proper seating. Lubricate the piston O-ring with ATF before installing. Do not pinch the O-ring by installing the piston with too much force.

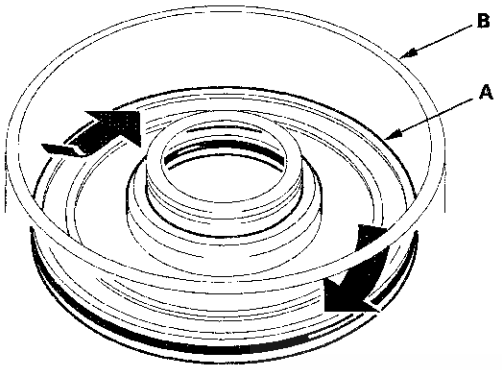

4. Set the return spring (A) and the spring retainer (B) on the clutch piston, and position the snap ring (C) on the spring retainer.

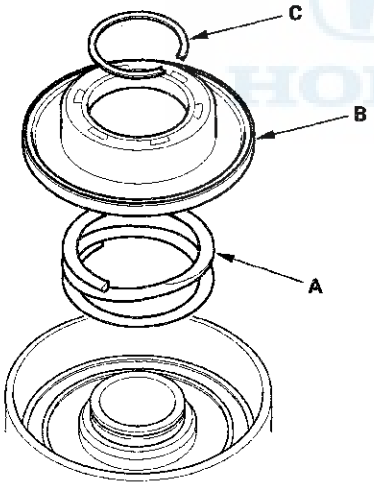

5. Install the clutch spring compressor set.

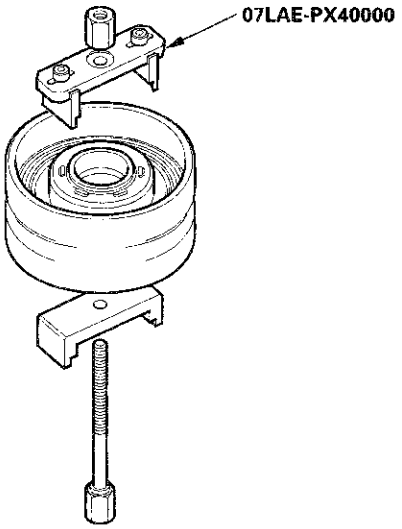

6. Set the clutch spring compressor attachment (A) on the spring retainer (B) so that it compresses the clutch return spring (C).

NOTE: Coat the circumference of the spring retainer and areas where the spring retainer contacts the clutch piston with ATF before installation.

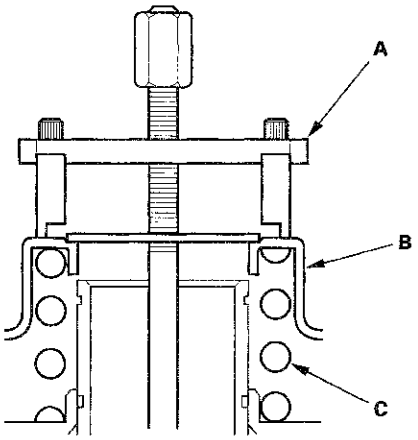

7. Compress the return spring carefully until the snap ring can be installed. Check that the spring retainer (A) is properly installed on the clutch hub (B). If improperly installed, change the position of the spring compressor attachment and the spring retainer.

   NOTE: Insert the spring retainer so it can be adjusted (center of tolerance) to prevent damaging the spring retainer oil seal.

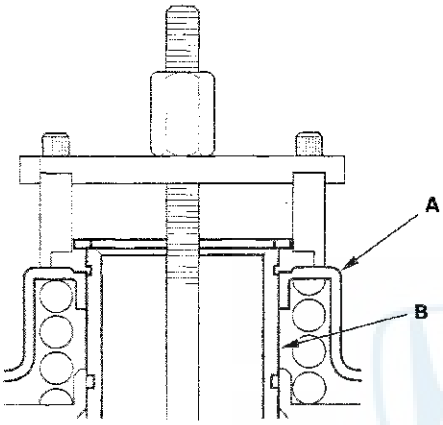

8. Install the snap ring using snap ring pliers.

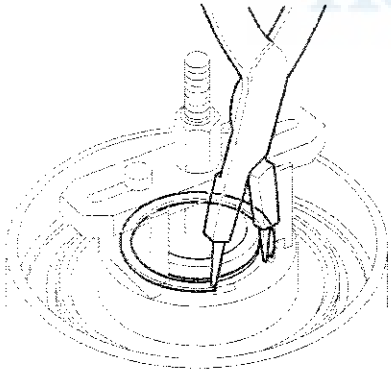

9. Remove the clutch spring compressor set.

10. Make sure the oil seal of the spring retainer (A) is properly installed on the clutch piston (B). If the oil seal was damaged or cracked, replace the spring retainer.

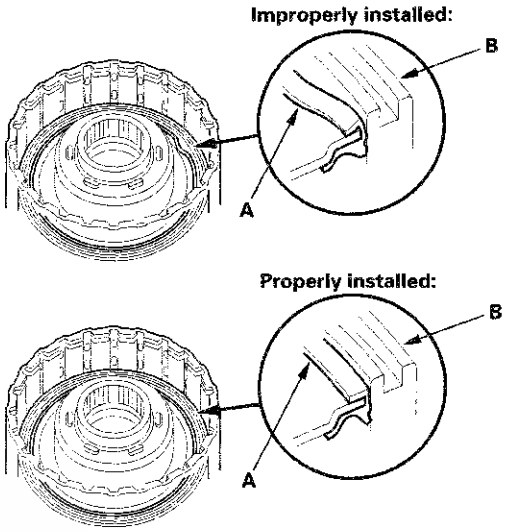

(cont'd)

1st, 2nd, and 3rd Clutch Reassembly (cont'd)

11. Install the wave spring (A) in the 1st clutch drum (B). Install the clutch flat-plate (C), then starting with the clutch disc, alternately install the clutch discs (D) (5) and the wave-plates (E) (4). Install the clutch end-plate (F) with the flat side toward the top disc.

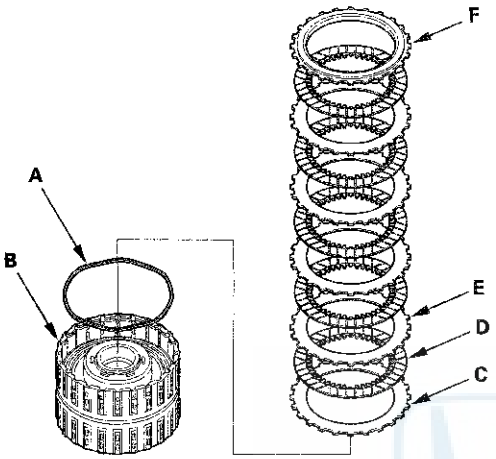

12. Install the wave spring (A) in the 2nd clutch drum (B). Install the clutch flat-plate (C), then starting with the clutch disc, alternately install the clutch discs (D) (6) and the wave-plates (E) (5). Install the clutch end-plate (F) with the flat side toward the top disc.

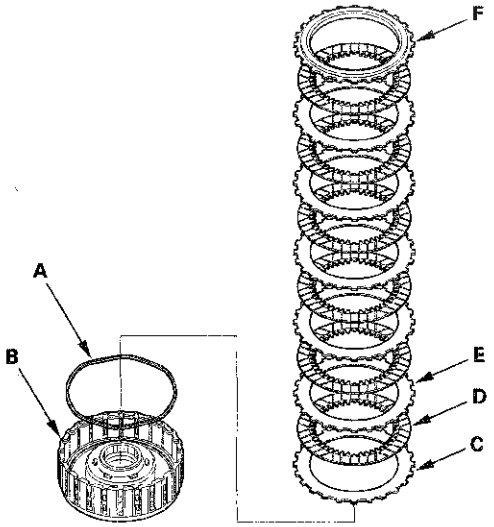

13. Install the wave spring (A) in the 3rd clutch drum (B). Install the clutch flat-plate (C), then starting with the clutch disc, alternately install the clutch discs (D) (6) and the wave-plates (E) (5). Install the clutch end-plate (F) with the flat side toward the top disc.

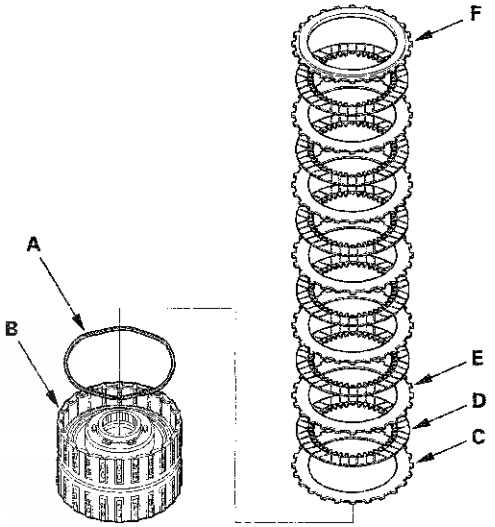

14. Install the snap ring using a screwdriver to secure the clutch end-plate.

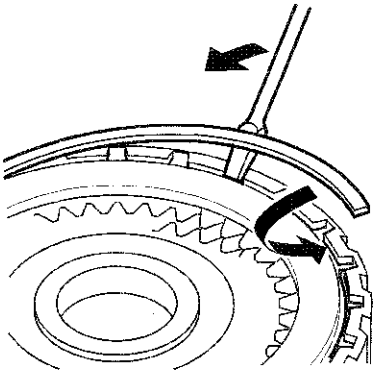

15. Check that the clutch piston moves by applying air pressure into fluid passage.

4th and 5th Clutch Reassembly

Special Tools Required
Clutch spring compressor set 07LAE-PX40000

1. Soak the clutch discs thoroughly in ATF for at least 30 minutes.

2. Install new O-rings (A) on the clutch piston (B). Do not twist the O-rings.

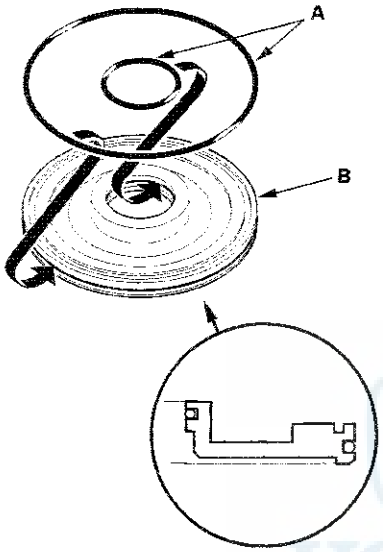

3. Install the clutch piston (A) in the clutch drum (B) while applying pressure and rotating to ensure proper seating. Do not pinch the O-ring.

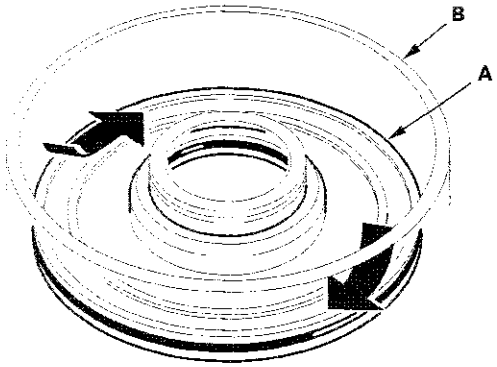

4. Set the return spring (A) and spring retainer (B) on the clutch piston, and position the snap ring (C) on the spring retainer.

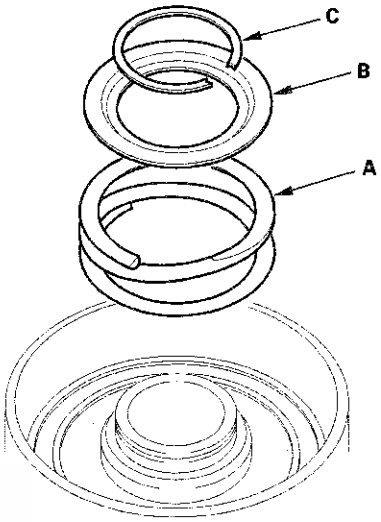

5. Install the clutch spring compressor set.

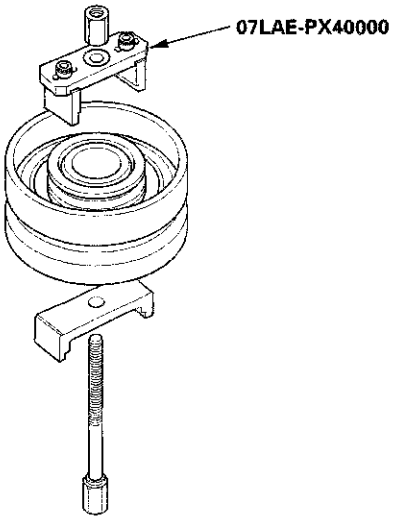

(cont'd)

4th and 5th Clutch Reassembly (cont'd)

6. Be sure the clutch spring compressor attachment (A) is adjusted to have full contact with the spring retainer (B).

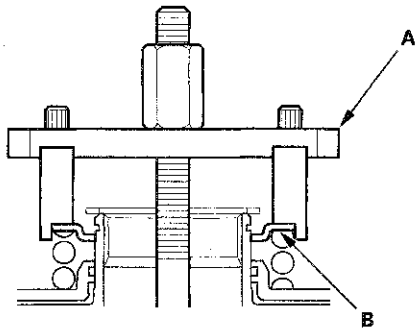

7. Check the placement of the clutch spring compressor attachment. If either end of the clutch spring compressor attachment is set over an area of the spring retainer that is unsupported by the return spring, the retainer may be damaged.

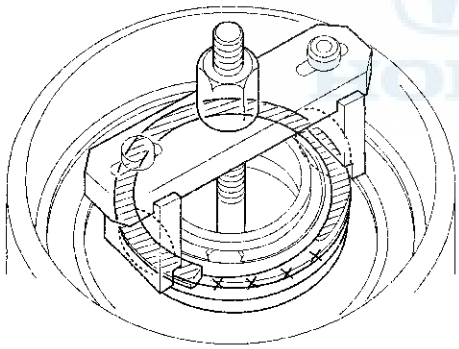

8. Compress the return spring until the snap ring can be installed.

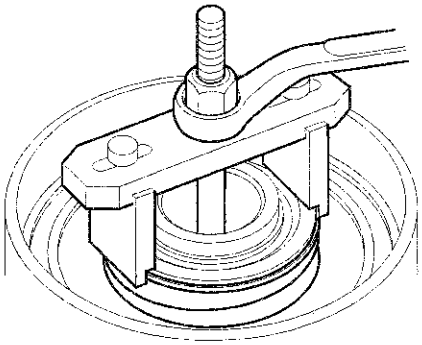

9. Install the snap ring using snap ring pliers.

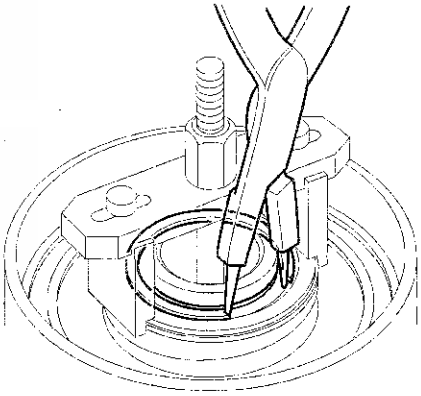

10. Remove the clutch spring compressor set.

11. Install the wave spring (A) in the 4th clutch drum (B). Starting with the clutch wave-plate, alternately install the wave-plates (C) (4) and the clutch discs (D) (4). Install the clutch end-plate (E) with the flat side toward the top disc.

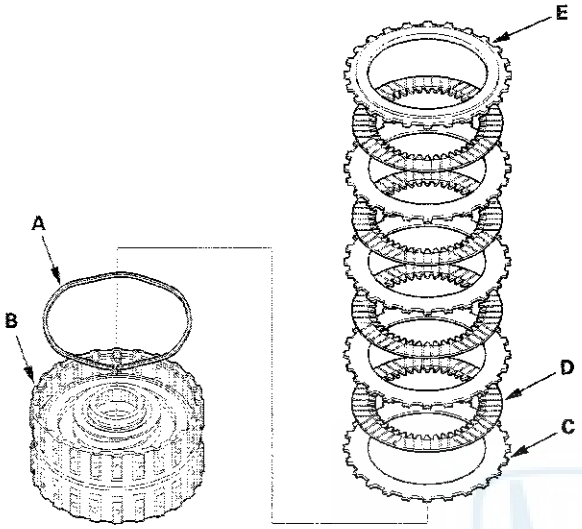

12. Install the wave spring (A) in the 5th clutch drum (B). Starting with the clutch wave-plate, alternately install the wave-plates (C) (4) and the clutch discs (D) (4). Install the clutch end-plate (E) with the flat side toward the top disc.

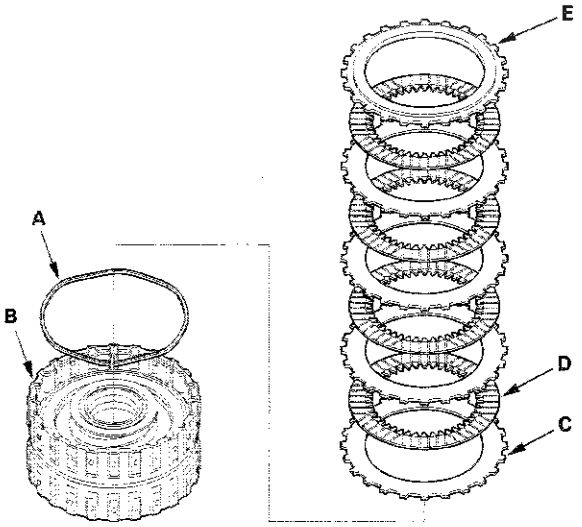

13. Install the snap ring using a screwdriver to secure the clutch end-plate.

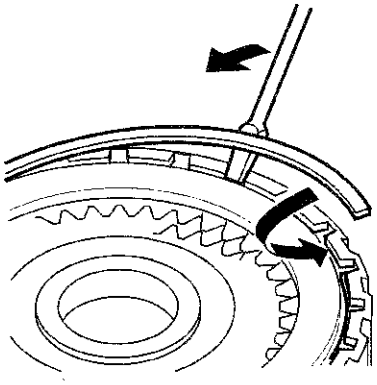

14. Check that the clutch piston moves by applying air pressure into fluid passage.

Valve Body and ATF Strainer Installation

Exploded View

Torque Specifications:
6 x 1.0 mm: 12 N·m (1.2 kgf·m, 8.7 lbf·ft)
8 x 1.25 mm: 18 N·m (1.8 kgf·m, 13 lbf·ft)

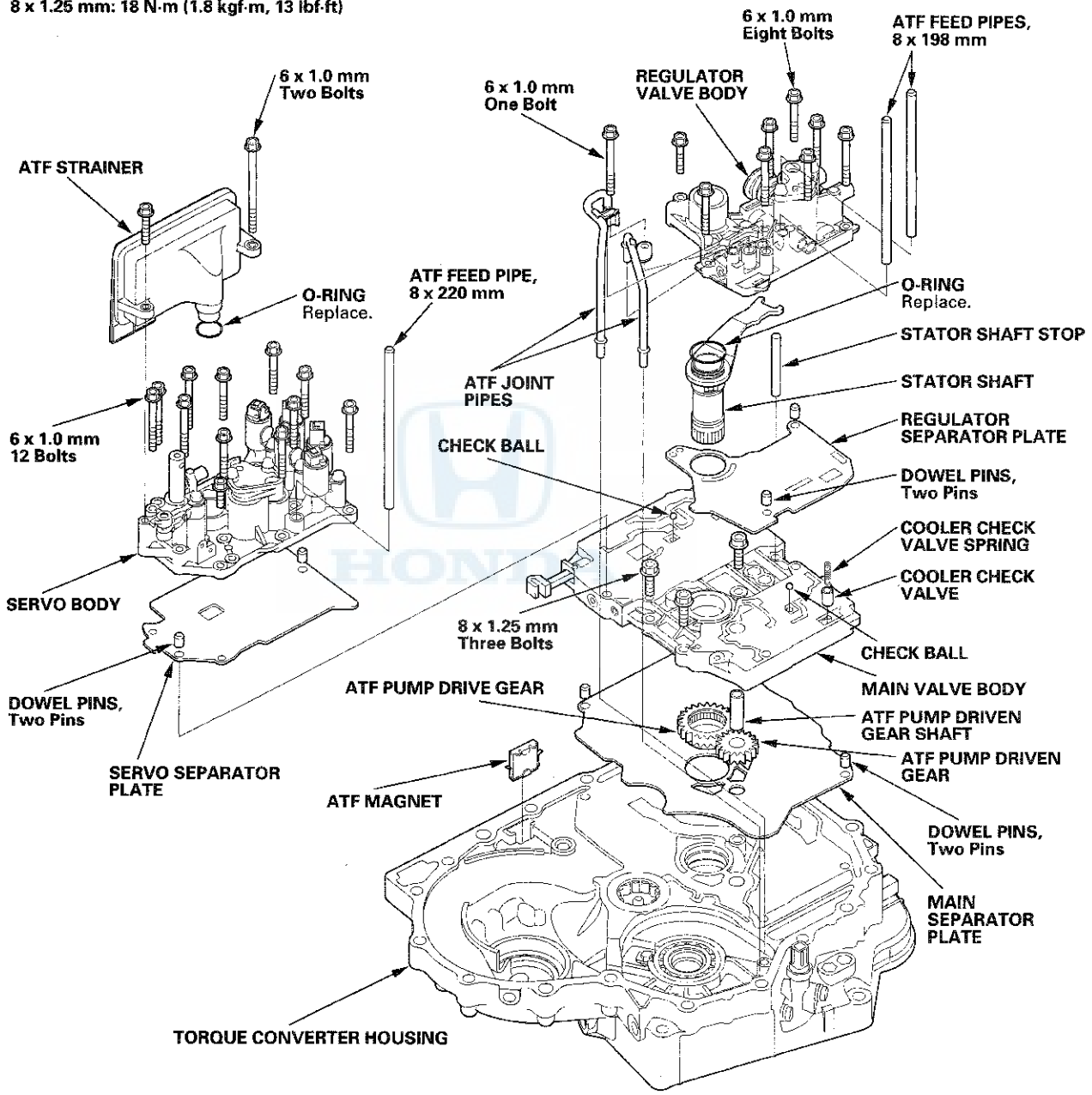

NOTE: Refer to the Exploded View as needed during the following procedures.

1. Make sure that the ATF magnet is clean and installed in the torque converter housing.

2. Install the main separator plate (A) and the two dowel pins on the torque converter housing. Then install the ATF pump drive gear (B), the ATF pump driven gear (C), and the ATF pump driven gear shaft (D). Install the ATF pump driven gear with its grooved and chamfered side facing down.

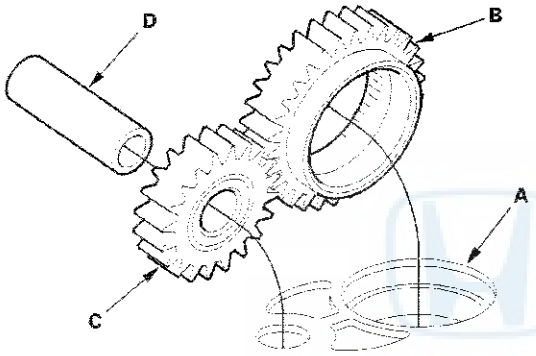

3. Install the main valve body (three bolts).

4. Make sure the ATF pump drive gear (A) rotates smoothly in the normal operating direction, and the ATF pump driven gear shaft (B) moves smoothly in the axial and normal operating direction.

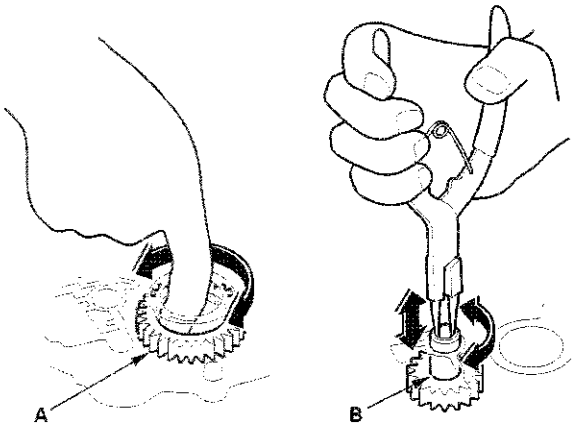

5. If the ATF pump drive gear and the ATF pump driven gear shaft do not move smoothly, loosen the main valve body bolts. Realign the ATF pump driven gear shaft, and retighten the bolts to the specified torque, then recheck. Failure to align the ATF pump driven gear shaft correctly will result in a seized ATF pump drive gear or ATF pump driven gear shaft.

6. Make sure that the two check balls and the cooler check valve are in the main valve body, then install the cooler check valve spring in the cooler check valve.

7. Install the servo separator plate and the two dowel pins on the main valve body.

8. Install the servo body (12 bolts).

9. Install a new O-ring on the ATF strainer, and install the ATF strainer (two bolts) on the servo body.

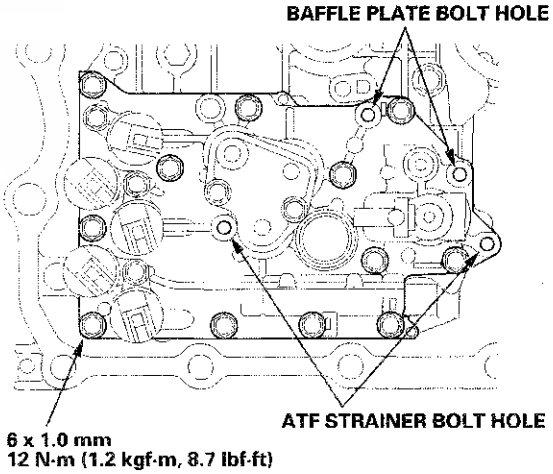

10. Install the regulator separator plate and the two dowel pins on the main valve body.

11. Install a new O-ring on the stator shaft, and install the stator shaft and the stator shaft stop.

12. Install the regulator valve body (eight bolts).

13. Install the ATF joint pipes (one bolt).

14. Install the ATF feed pipes in the regulator valve body and the servo body.

Shaft Assembly and Housing Installation

Exploded View

Torque Specifications:
6 x 1.0 mm: 12 N·m (1.2 kgf·m, 8.7 lbf·ft)

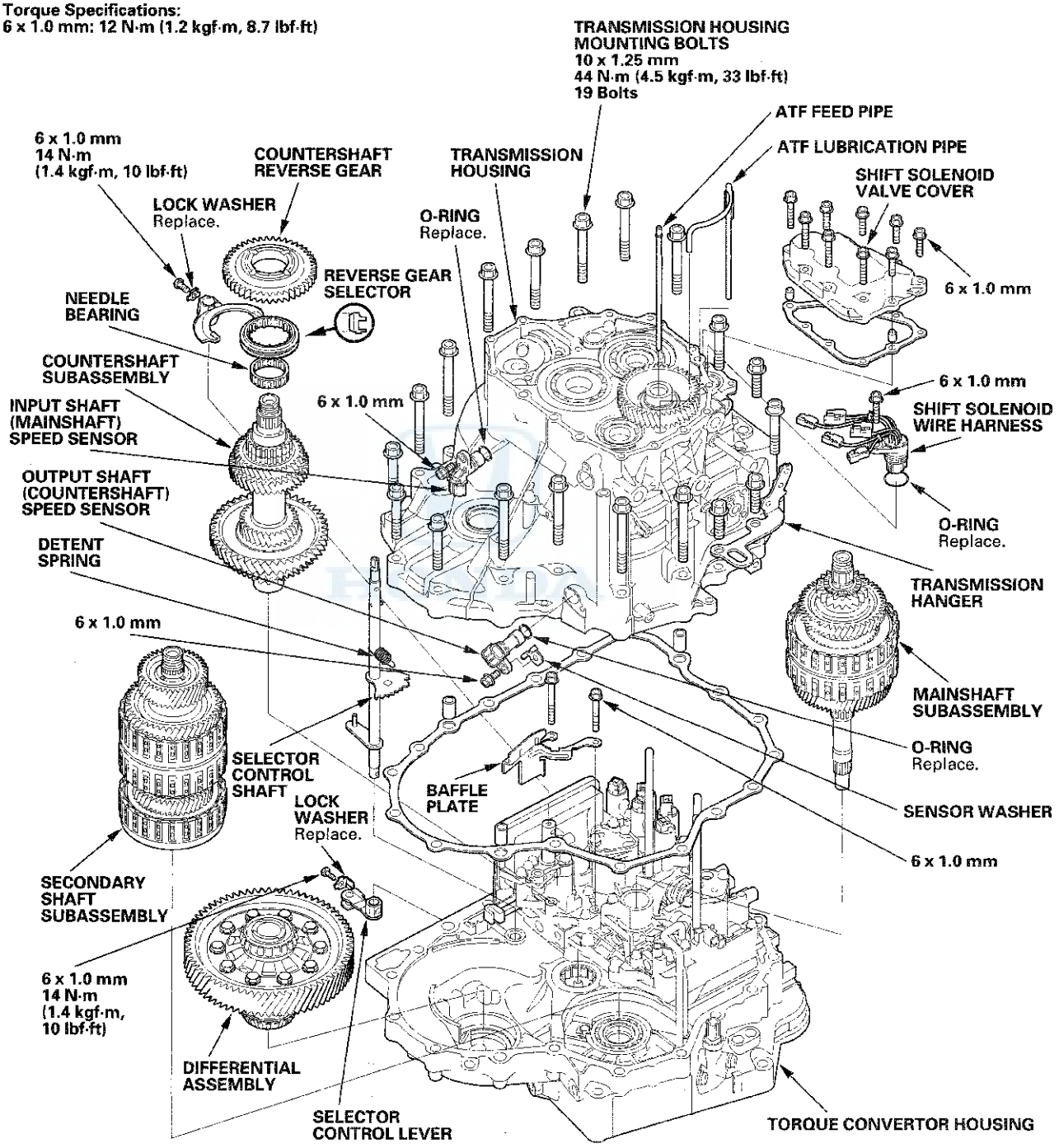

NOTE: Refer to the Exploded View as needed during the following procedure.

1. Install the differential assembly in the torque converter housing.

2. Install the baffle plate on the servo body (see step 9 on page 14-361).

3. Assemble the mainshaft, the countershaft, and the secondary shaft.

4. Join the mainshaft subassembly (A), the countershaft subassembly (B), and the secondary shaft subassembly (C) together. Then install them in the torque converter housing. Do not bump the countershaft on the baffle plate (D).

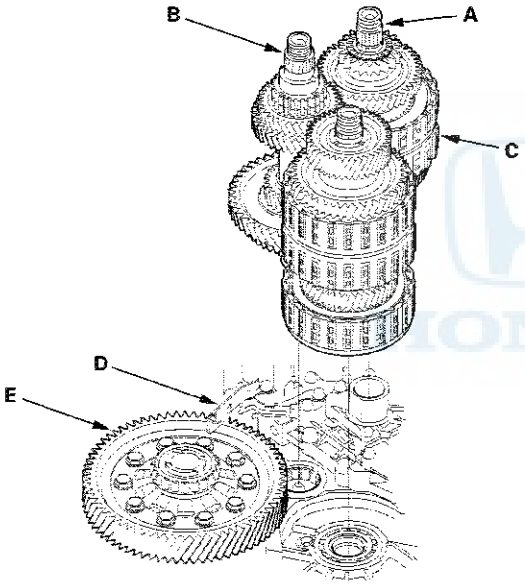

5. Make sure the countershaft subassembly and the differential assembly (E) are clear of the baffle plate.

6. If the detent arm was removed, install the detent arm (A) with the arm collar (B) on the servo body (C), and install a new lock washer (D) by aligning its cutout (E) with the alignment tab (F) of the servo body. Install and tighten the bolt, then bend the lock tab of the lock washer against the bolt head.

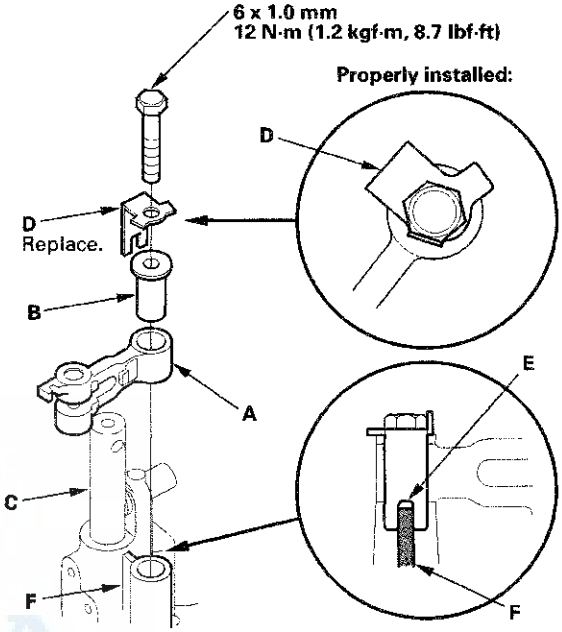

(cont'd)

Shaft Assembly and Housing Installation (cont'd)

7. Install the selector control shaft (A) in the torque converter housing aligning the manual valve lever pin (B) on the selector control shaft with the guide of the manual valve (C). Pull the manual valve gently when aligning the manual valve with the selector control shaft.

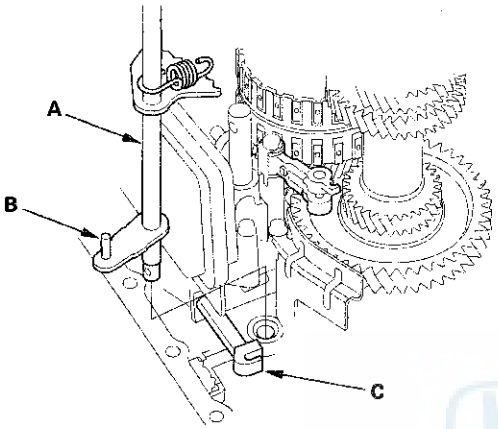

8. Hook the detent spring (A) to the detent arm (B).

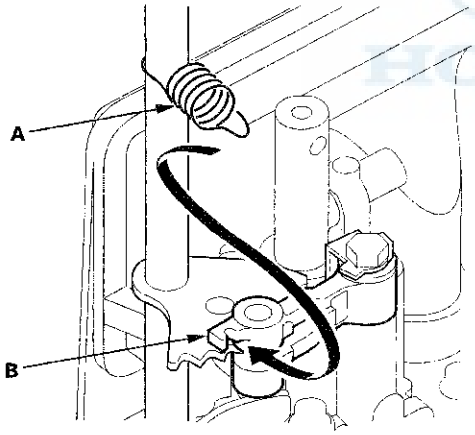

9. Turn the shift fork shaft (A) so the large chamfered hole (B) is facing the fork bolt hole (C) of the reverse shift fork (D).

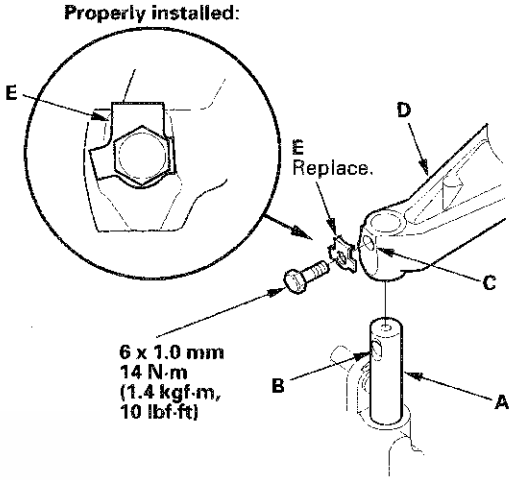

10. Install the reverse shift fork and the reverse selector together on the shift fork shaft and the countershaft subassembly. Secure the reverse shift fork to the shift fork shaft with the lock bolt and a new lock washer (E), then bend the lock tab of the lock washer against the bolt head.

11. Install the needle bearing and the countershaft reverse gear on the countershaft subassembly.

12. Install the reverse idler gear in the transmission housing (see page 14-317) if it was removed.

13. Install the idler gear shaft/idler gear assembly (see page 14-342), if it was removed.

14. Install the three dowel pins (A) and a new gasket (B) on the torque converter housing (C).

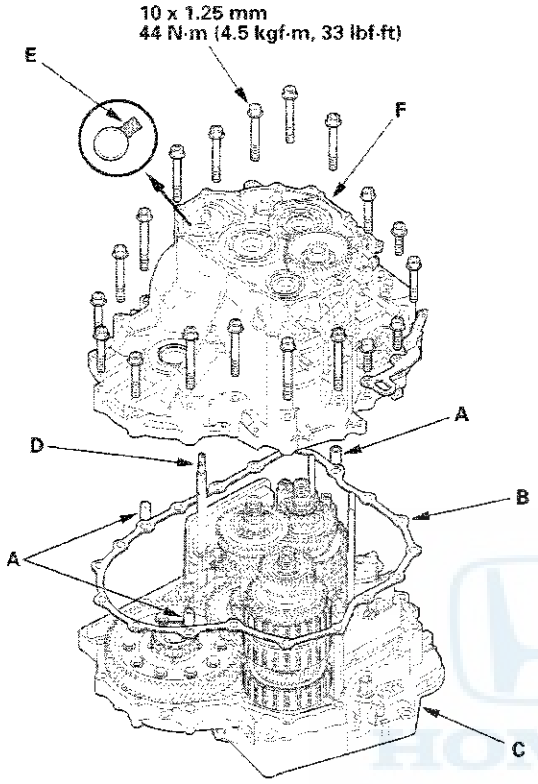

15. Align the spring pin of the selector control shaft (D) with the transmission housing groove (E) by turning the selector control shaft. Do not squeeze the end of the selector control shaft tips together when turning the selector control shaft. If the tips are squeezed together, it will cause a faulty shift position signal or position due to the play between the selector control shaft and the transmission range switch.

16. Place the transmission housing (F) on the torque converter housing. Do not install the mainshaft and countershaft speed sensors before installing the transmission housing on the torque converter housing.

17. Wrap a screwdriver tip with tape to prevent damage to the reverse idler gear teeth. Engage the reverse idler gear with reverse gears by rotating the reverse idler gear using the screwdriver.

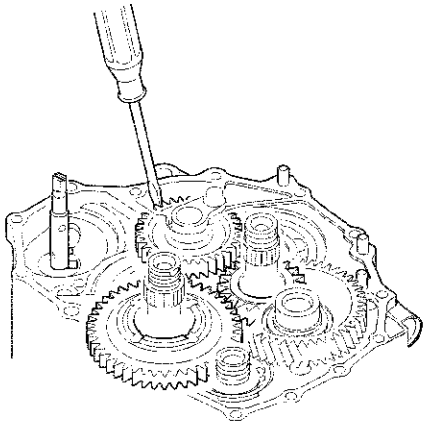

18. Install the transmission housing mounting bolts, and tighten the 19 bolts to 44 N·m (4.5 kgf·m, 33 lbf·ft) in at least two steps, in a crisscross pattern.

(cont'd)

Shaft Assembly and Housing Installation (cont'd)

19. Install a new O-ring (A) on the input shaft (mainshaft) speed sensor (B), and install the input shaft (mainshaft) speed sensor in the transmission housing.

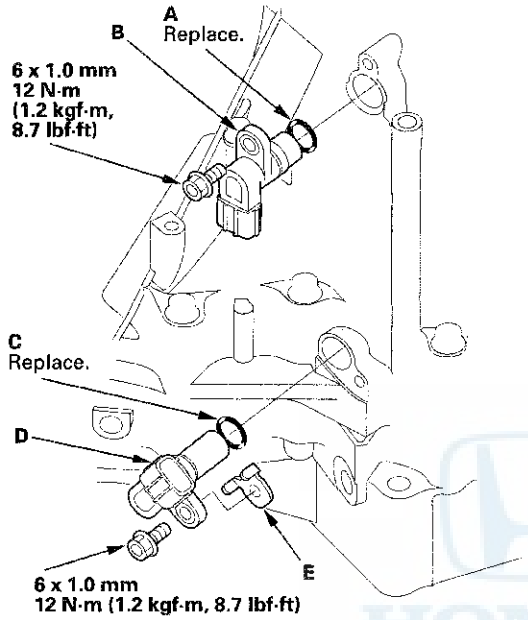

20. Install a new O-ring (C) on the output shaft (countershaft) speed sensor (D), and install the output shaft (countershaft) speed sensor with the washer (E).

21. Install the shift solenoid wire harness (F) in the transmission housing with a new O-ring (G).

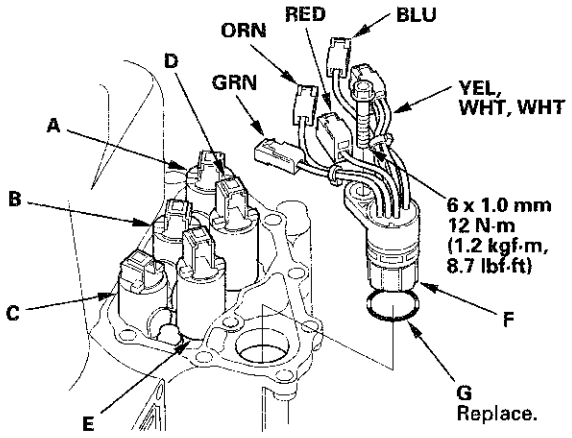

22. Connect the shift solenoid wire harness connectors to the shift solenoid valves:

- BLU wire connector to shift solenoid valve A.
- ORN wire connector to shift solenoid valve B.
- GRN wire connector to shift solenoid valve C.
- YEL, WHT, and WHT wire connector to shift solenoid valve D.
- RED wire connector to shift solenoid valve E.

23. Install a new gasket (A) and the dowel pins (B), then secure the shift solenoid valve cover (C) with the bolts.

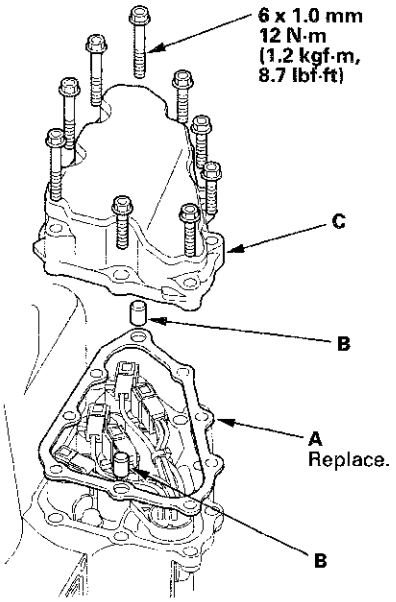

End Cover Installation

Exploded View

Torque Specifications:
6 x 1.0 mm: 12 N·m (1.2 kgf·m, 8.7 lbf·ft)

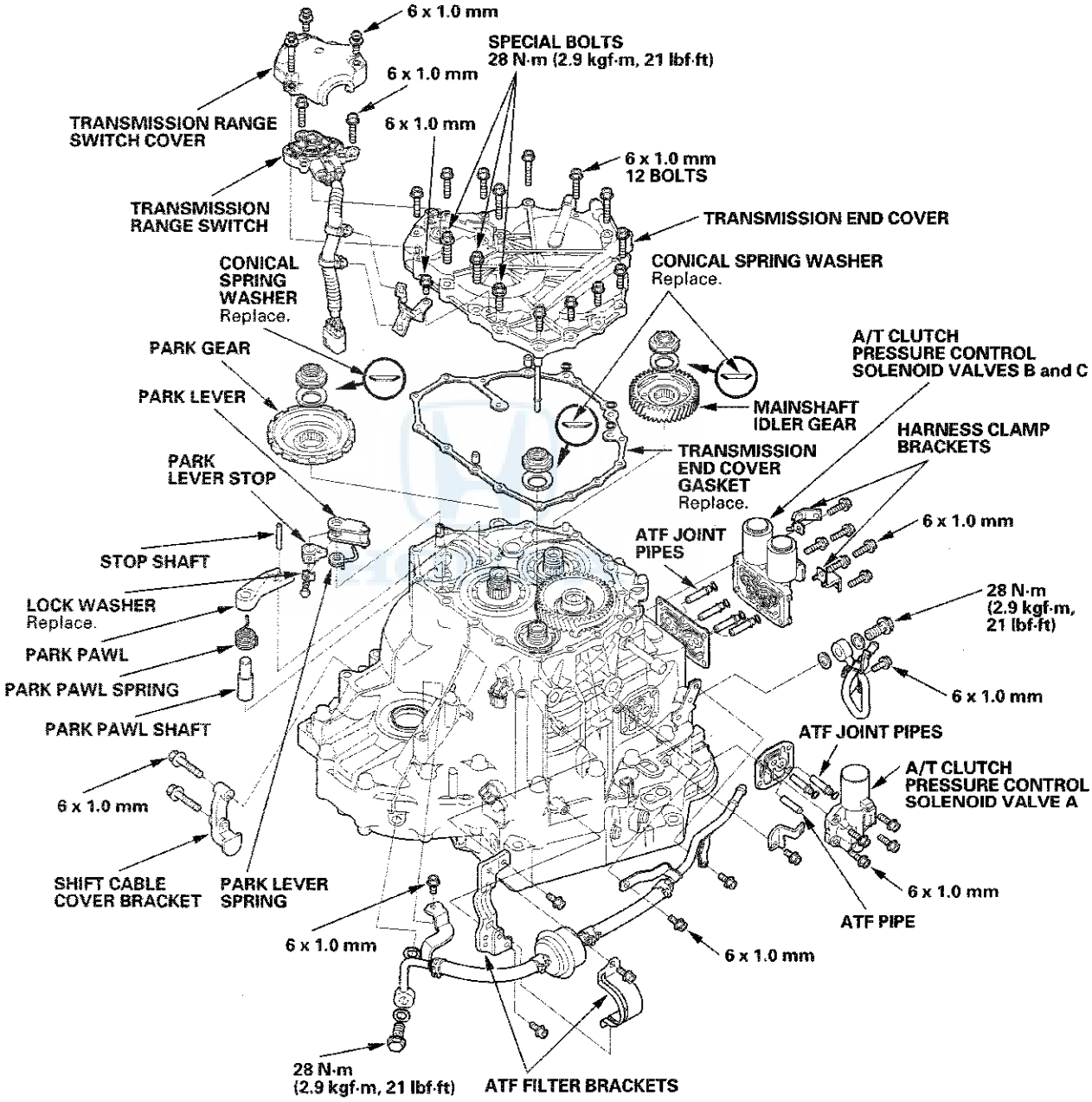

(cont'd)

End Cover Installation (cont'd)

Special Tool Required
Mainshaft holder 07GAB-PF50101

NOTE: Refer to the Exploded View as needed during the following procedure.

1. Install the mainshaft holder onto the mainshaft.

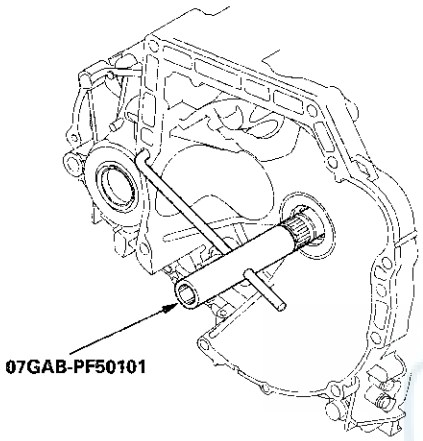

2. Lubricate the following parts with ATF:
   - Splines and threads of the mainshaft.
   - Splines of the mainshaft idler gear.
   - The old conical spring washer and the old locknut.

3. Install the mainshaft idler gear (A), the old conical spring washer (B), and the old locknut (C) on the mainshaft (D), and tighten the locknut to 226 N·m (23.0 kgf·m, 166 lbf·ft).

   NOTE:
   - Do not tap the mainshaft idler gear to install.
   - Use a torque wrench to tighten the locknut. Do not use an impact wrench.

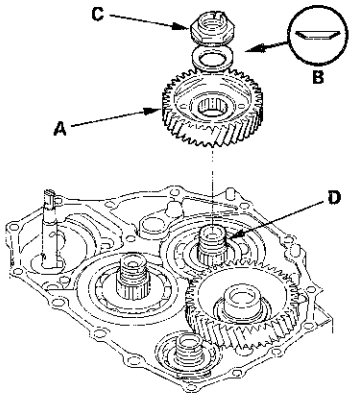

4. Install the park lever spring (A), the park lever (B), and the park lever stop (C) on the selector control shaft (D), then install the lock bolt with a new lock washer (E). Do not bend the lock tab of the lock washer until step 18.

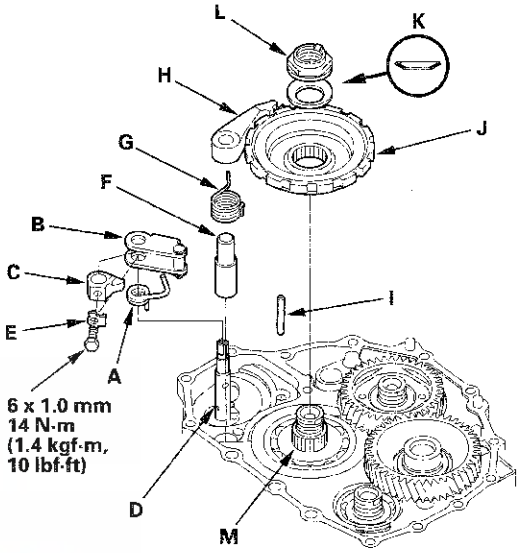

5. Install the park pawl shaft (F), the park pawl spring (G), the park pawl (H), and the stop shaft (I) on the transmission housing.

6. Lubricate the following parts with ATF:
   - Threads and splines of the countershaft.
   - The old conical spring washer and the old locknut.
   - Areas where the park gear contacts the conical spring washer.

7. Install the park gear (J), the old conical spring washer (K), and the old locknut (L) on the countershaft (M).

8. Lift the park pawl up, and engage it with the park gear, then tighten the locknut to 226 N·m (23.0 kgf·m, 166 lbf·ft).

   NOTE:
   - Do not tap the park gear to install.
   - Use a torque wrench to tighten the locknut. Do not use an impact wrench.
   - Countershaft locknut has left-hand threads.

9. Remove the locknuts and the conical spring washers from the mainshaft and the countershaft.

10. Lubricate the threads of the shafts, new locknuts, and new conical spring washers with ATF.

11. Install new conical spring washers (A) with facing stamped mark side up in the direction shown, and install a new mainshaft locknut (B), a new countershaft locknut (C), and a new secondary shaft locknut (D).

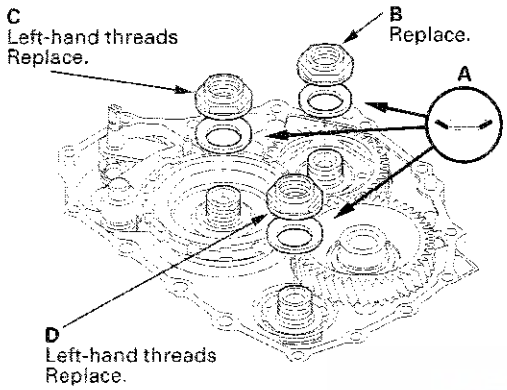

12. Tighten the locknuts to 167 N·m (17.0 kgf·m, 123 lbf·ft).

NOTE:
- Be sure to install the conical spring washers in the direction shown.
- Use a torque wrench to tighten the locknut. Do not use an impact wrench.
- Countershaft and secondary shaft locknuts have left-hand threads.

13. Remove the mainshaft holder from the mainshaft.

14. Stake the locknuts into the shafts to a depth (A) of 0.7—1.3 mm (0.03—0.05 in.) using a 3.5 mm punch (B).

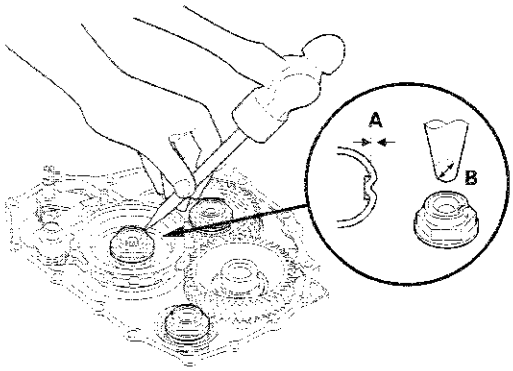

15. VIN begins with JHM: Install the selector control lever (A) on the selector control shaft (B), and install the bolt with a new lock washer (C), then bend the lock tab of the lock washer against the bolt head.

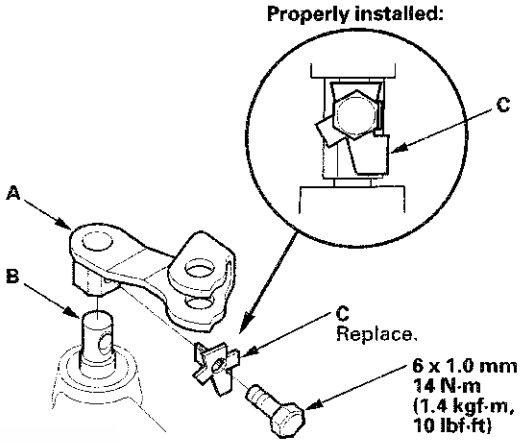

16. Set the park lever in the P position, then check that the park pawl (A) engages the park gear (B).

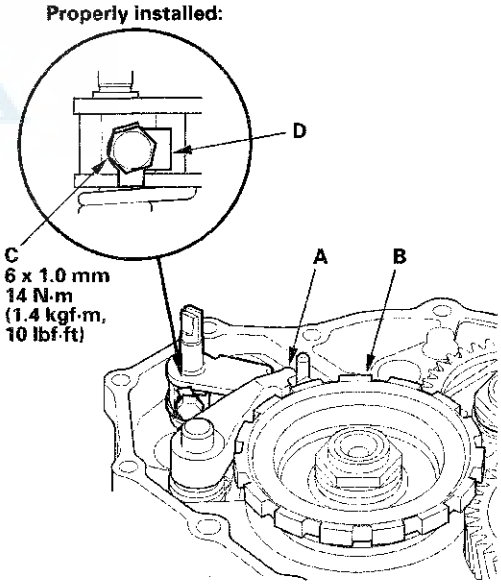

17. If the park pawl does not engage fully, do the park lever stop inspection and adjustment (see page 14-309).

18. Tighten the lock bolt (C), and bend the lock tab of the lock washer (D) against the bolt head.

(cont'd)

End Cover Installation (cont'd)

19. Install the ATF feed pipe (A) into the idler gear shaft, and install the ATF lubrication pipe (B) into the transmission housing.

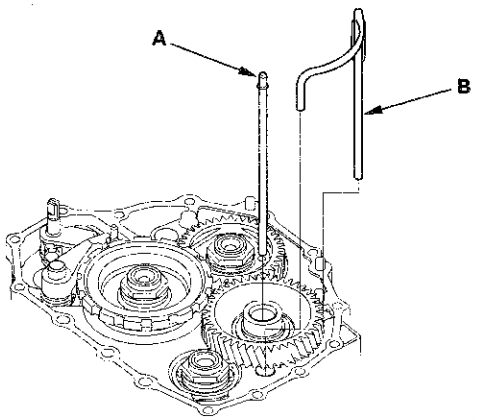

20. Install a new gasket (A) on the transmission housing, and install the two dowel pins (B) and new O-rings (C) over the top of the ATF feed pipes.

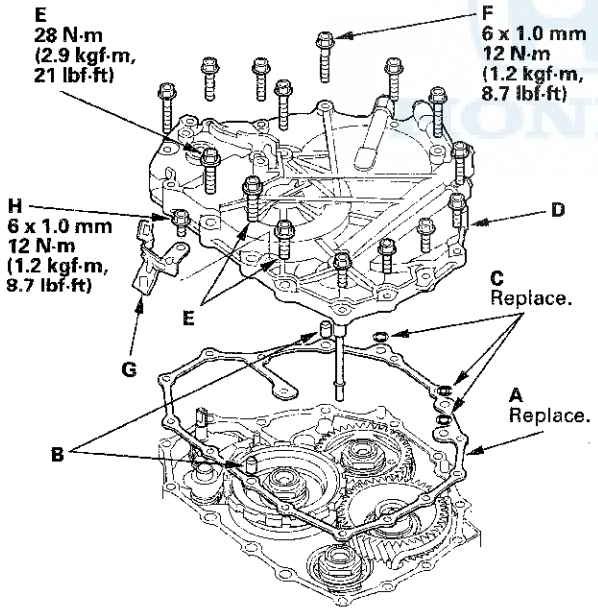

21. Install the end cover (D), and tighten the three special bolts (E) and the 6 x 1.0 mm bolts (F) (12 bolts).

22. Install the harness clamp bracket (G) on the end cover with the bolt (H).

23. Move the selector control shaft (A) from the P position to the N position by turning the selector control shaft on the torque converter side.

NOTE: Do not squeeze the end of the selector control shaft tips together when turning the shaft. If the tips are squeezed together it will cause a faulty shift position signal or position due to the play between the selector control shaft and the transmission range switch.

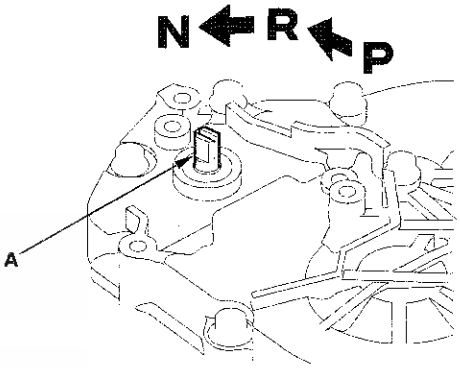

24. Align the cutouts (A) on the rotary-frame with the neutral positioning cutouts (B) on the transmission range switch (C), then put a 2.0 mm (0.08 in.) feeler gauge blade (D) in the cutouts to hold in the N position.

NOTE: Be sure to use a 2.0 mm (0.08 in.) blade or equivalent to hold the transmission range switch in the N position.

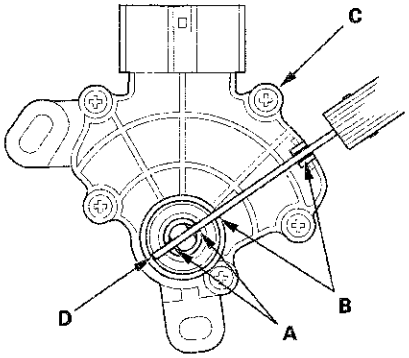

25. Install the transmission range switch (A) gently on the selector control shaft (B) while holding it in the N position with the 2.0 mm (0.08 in.) blade (C).

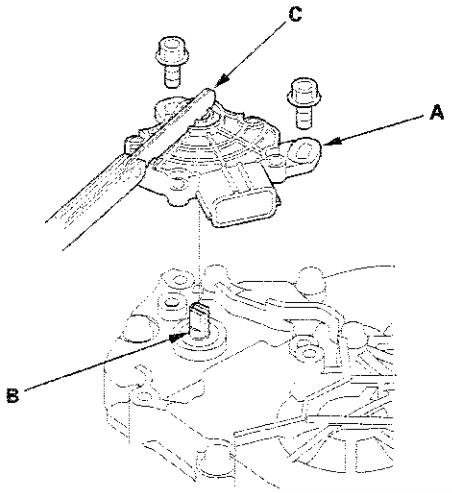

26. Tighten the bolts on the transmission range switch while you continue to hold it in the N position. Do not move the transmission range switch when tightening the bolts. Remove the feeler gauge.

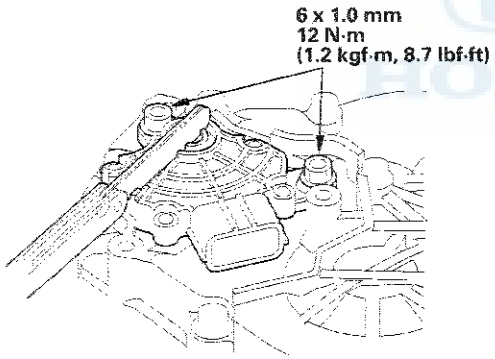

27. Connect the transmission range switch connector (A) securely, then install the harness clamps (B) on the clamp bracket (C).

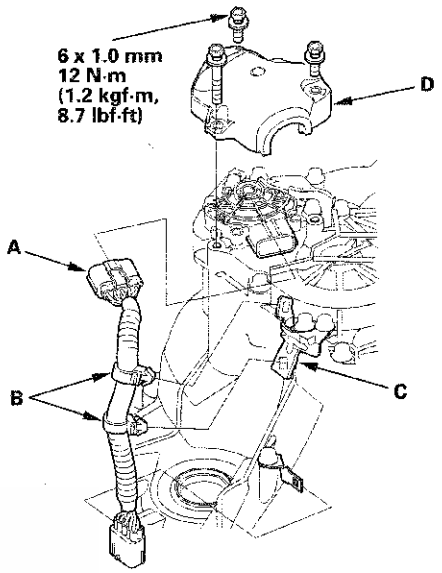

28. Install the transmission range switch cover (D).

(cont'd)

End Cover Installation (cont'd)

29. Clean the mounting surface and the fluid passage of A/T clutch pressure control solenoid valve A and the transmission housing.

30. Install a new gasket (B) on the transmission housing, and install the ATF pipe (C) and the ATF joint pipes (D).

    NOTE: Be sure to install a new gasket with the blue side toward the transmission housing.

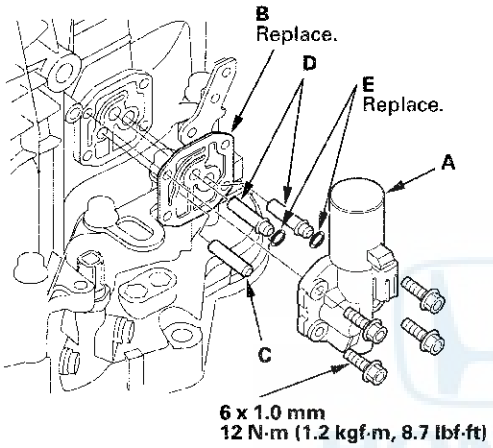

31. Install a new O-rings (E) over the ATF joint pipes, and install A/T clutch pressure control solenoid valve A.

32. Clean the mounting surface and the fluid passage of A/T clutch pressure control solenoid valves B and C and the transmission housing.

33. Install a new gasket (A) and the ATF joint pipes (D) on the transmission housing, and install new O-rings (E) over the ATF joint pipes.

    NOTE: Be sure to install a new gasket with the blue side toward the transmission housing.

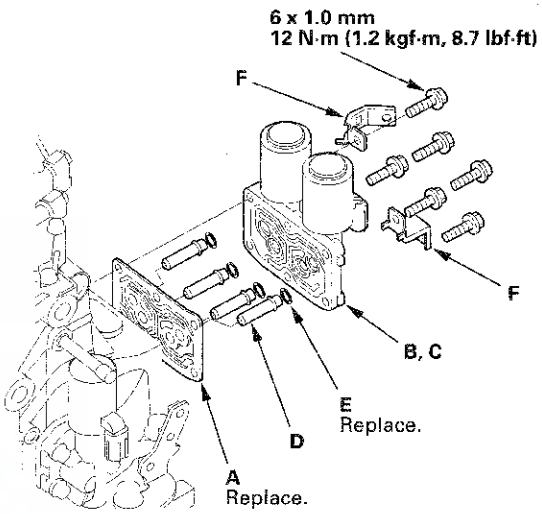

34. Install A/T clutch pressure control solenoid valves B and C with the harness clamp brackets (F).

35. Install the ATF filter bracket (A) on the transmission housing, then install the ATF cooler line/ATF filter (B) with the line banjo bolt (C) and new sealing washers (D). Secure the ATF filter with its bracket (E).

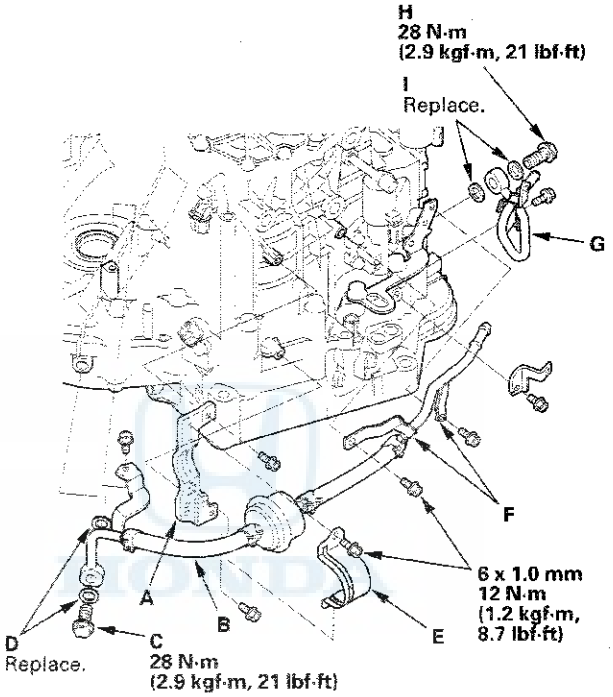

36. Secure the line brackets (F) with two bolts.

37. Install the ATF cooler outlet line (G) with the line banjo bolt (H) and new sealing washers (I).

38. Install the breather cap (A) on the breather pipe (B).

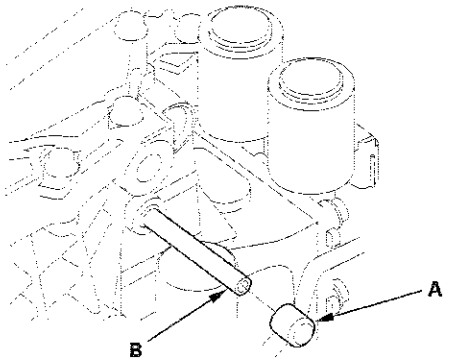

39. Install the dipstick.

A/T Differential

Component Location Index

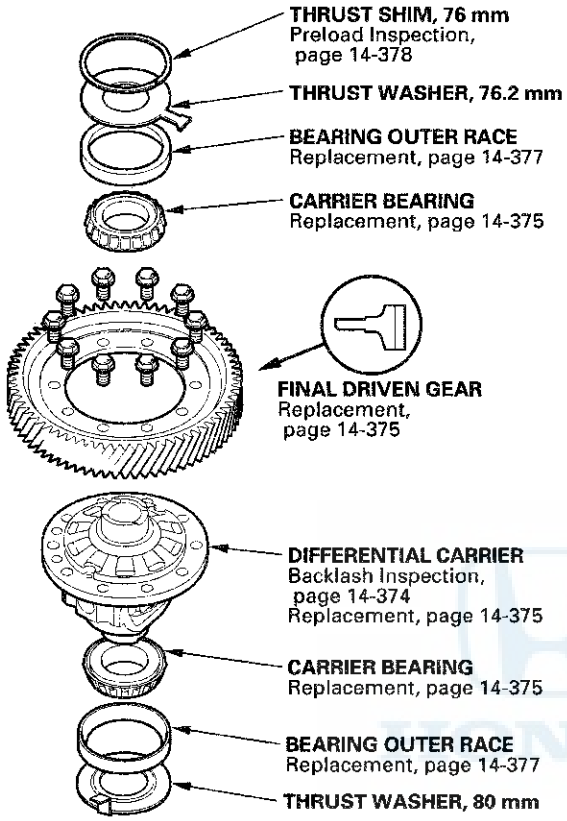

Backlash Inspection

1. Install both axles into the A/T differential, then place the axles on V-blocks.
2. Check the backlash of the pinion gears (A) using a dial indicator (B).

   Standard: 0.05—0.15 mm (0.002—0.006 in.)

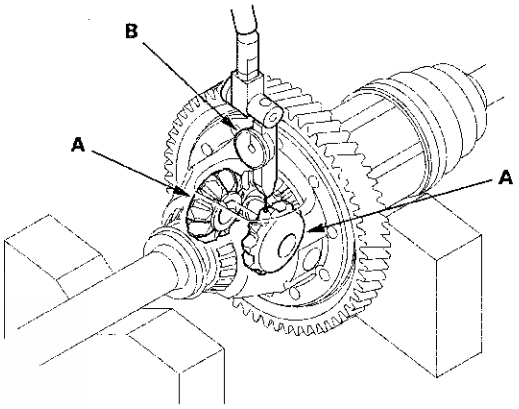

3. If the backlash is out of standard, replace the differential carrier (see page 14-375).

Carrier Bearing Replacement

Special Tools Required
Attachment, 40 mm 07LAD-PW50601

NOTE:
- The bearing and the bearing outer race should be replaced as a set.
- Inspect and adjust the carrier bearing preload whenever bearing is replaced.
- Check the bearing for wear and rough rotation. If the bearing is OK, removal is not necessary.

1. Remove the carrier bearing (A) using a commercially available puller (B), a bearing separator (C), and a spacer (D).

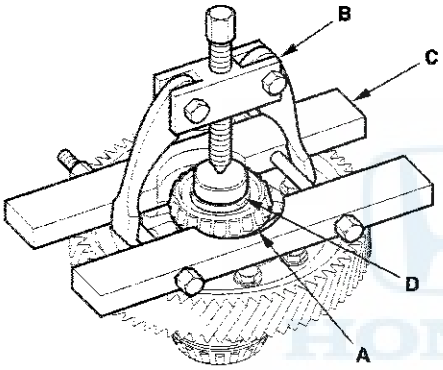

2. Install new carrier bearings using the 40 mm attachment with the small end and a press. Press the carrier bearing on securely so there is no clearance between the carrier bearing and the differential carrier.

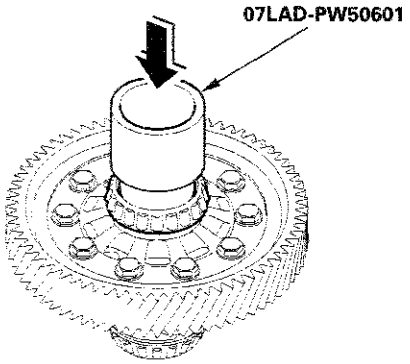

Differential Carrier and Final Driven Gear Replacement

1. Remove the final driven gear (A) from the differential carrier (B).

   NOTE: Differential carrier bolts have left-hand threads.

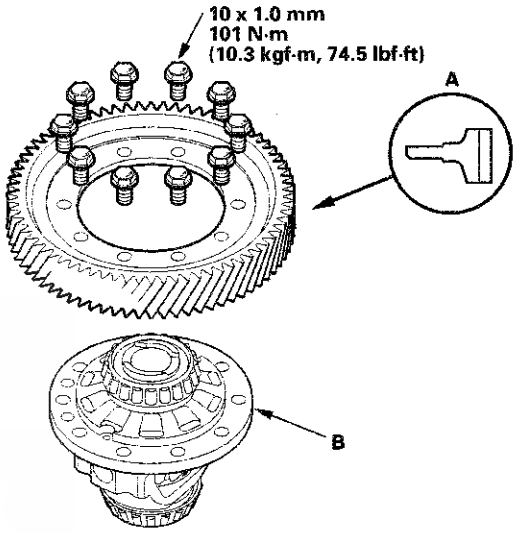

2. Install the final driven gear in the direction shown on the differential carrier.

3. Secure the final driven gear and the differential carrier with the bolts. Tighten the bolts to the specified torque in a crisscross pattern in at least two steps.

Oil Seal Replacement

Special Tools Required
- Driver 07749-0010000
- Oil seal driver attachment 07947-SD90101
- Oil seal driver attachment 07JAD-PH80101

1. Remove the oil seal from the transmission housing.

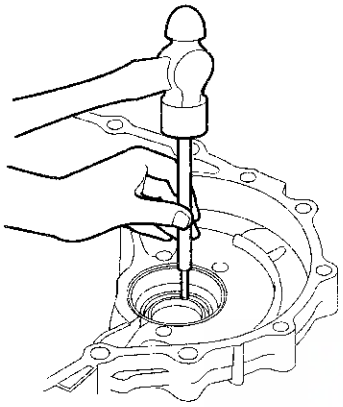

2. Remove the oil seal from the torque converter housing.

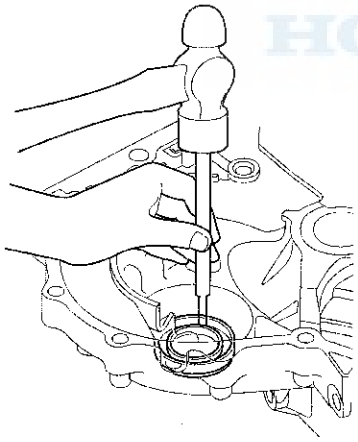

3. Install a new oil seal (A) flush with the transmission housing using the driver and the oil seal driver attachment.

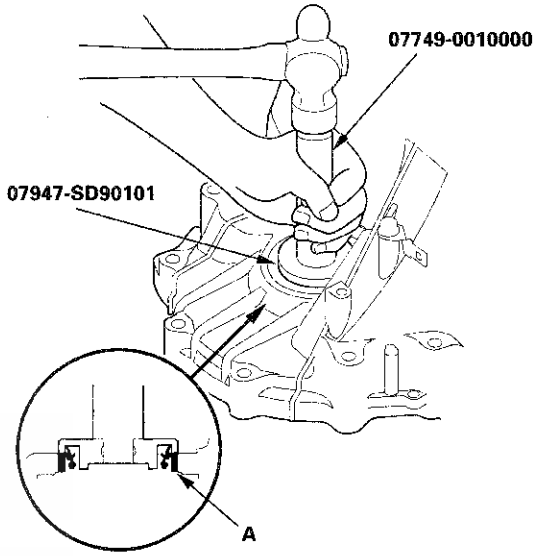

4. Install a new oil seal (A) flush with the torque converter housing using the driver and the oil seal driver attachment.

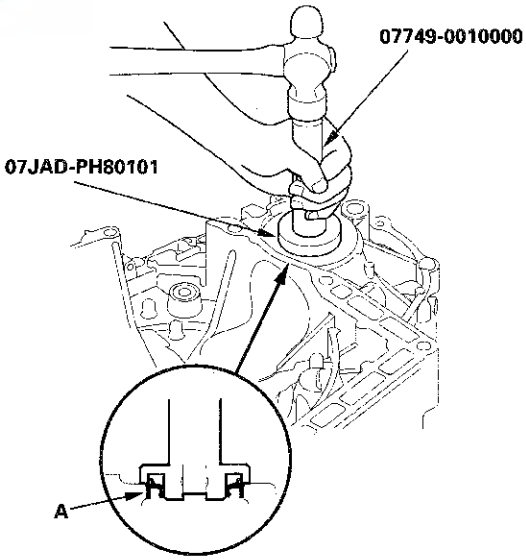

Carrier Bearing Outer Race Replacement

Special Tools Required
- Driver 07749-0010000
- Attachment, 78 x 80 mm 07NAD-PX40100
- Attachment, 72 x 75 mm 07746-0010600

NOTE:
- The bearing and the bearing outer race should be replaced as a set.
- Replace the bearing with a new one whenever the outer race is replaced.
- Do not use the thrust shim from the torque converter housing.
- Adjust bearing preload after replacing the bearing and the outer race.
- Cost all parts with ATF during installation.

1. Remove the bearing outer race (A), the 76.2 mm thrust washer (B), and the 76 mm thrust shim (C) from the transmission housing (D) by heating the transmission housing to about 212 °F (100 °C) using a heat gun (E). Do not heat the transmission housing more than 212 °F (100 °C).

   NOTE: Let the transmission housing cool to room temperature before installing the bearing outer race.

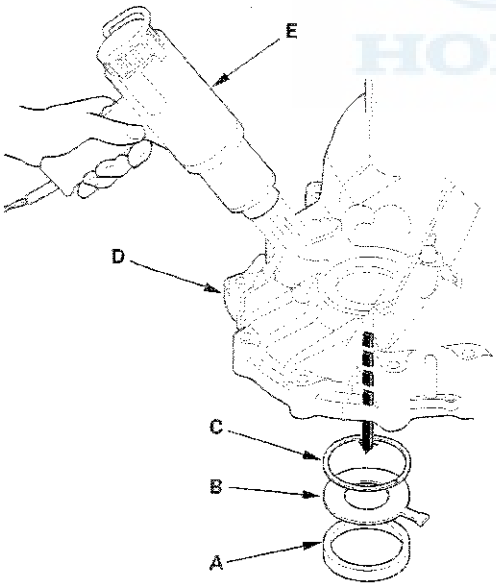

2. Remove the bearing outer race (A) and the 80 mm thrust washer (B) from the torque converter housing (C).

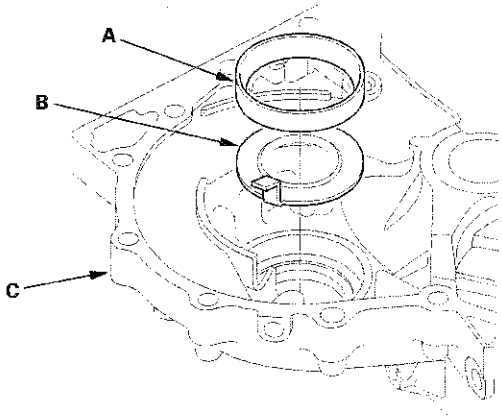

3. Install the 80 mm thrust washer and a new bearing outer race in the torque converter housing.

4. Install the bearing outer race securely in the torque converter housing using the driver and the 78 x 80 mm attachment.

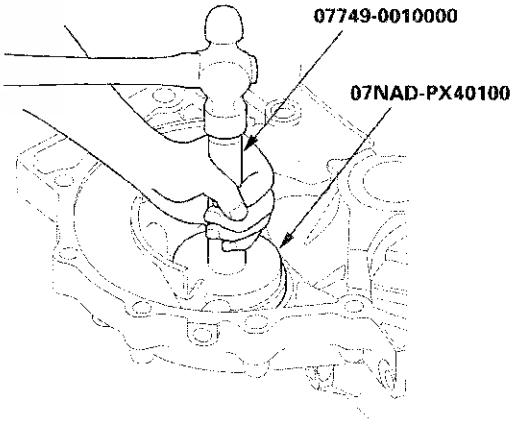

(cont'd)

Carrier Bearing Outer Race Replacement (cont'd)

5. Install the 76 mm thrust shim (A), the 76.2 mm thrust washer (B), and a new bearing outer race (C) in the transmission housing (D).

   NOTE: Be sure to install the 76.2 mm thrust washer with the "41382 RKY" mark facing downward.

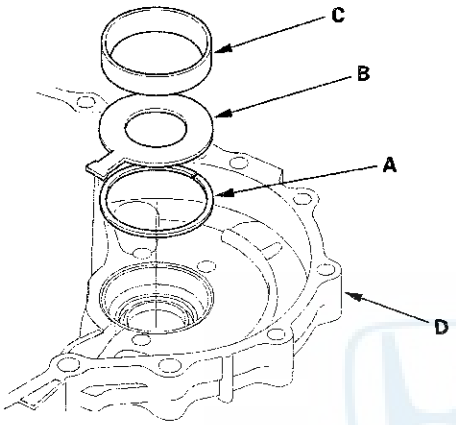

6. Install the bearing outer race securely so there is no clearance between the bearing outer race, the 76.2 mm thrust washer, the 76 mm thrust shim, and the transmission housing, using the driver and the 72 x 75 mm attachment.

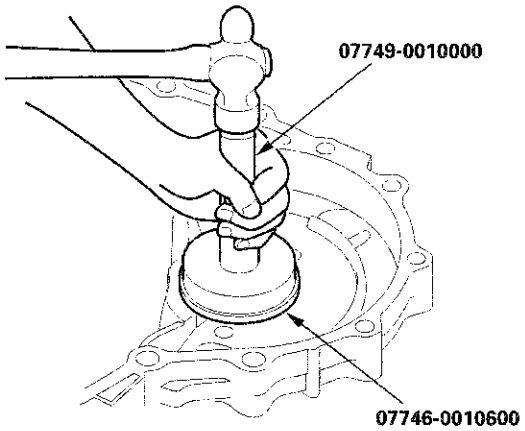

Carrier Bearing Preload Inspection

Special Tools Required
- Driver 07749-0010000
- Attachment, 72 x 75 mm 07746-0010600
- Preload inspection tool 07HAJ-PK40201

NOTE:
- If the transmission housing, the torque converter housing, the differential carrier, the carrier bearing and the outer race, or the thrust shim were replaced, the bearing preload must be adjusted.
- Coat all parts with ATF during installation.
- Do not use the thrust shim from the torque converter housing.

1. Remove the bearing outer race (A), the 76.2 mm thrust washer (B), and the 76 mm thrust shim (C) from the transmission housing (D) by heating the transmission housing to about 212 °F (100 °C) using a heat gun (E). Do not heat the transmission housing more than 212 °F (100 °C).

   NOTE: Let the transmission housing cool to room temperature before adjusting the bearing preload.

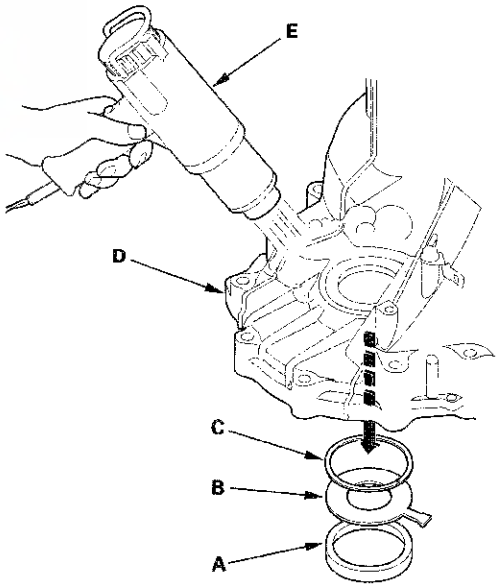

2. Install the 76 mm thrust shim (A) in the transmission housing (B). If you replace the 76 mm thrust shim with a new one, use the same thickness shim as the old one.

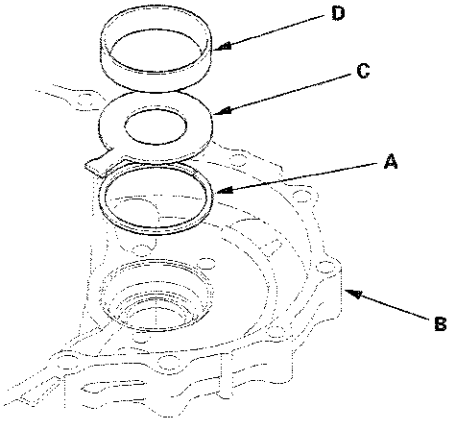

3. Install the 76.2 mm thrust washer (C) and the bearing outer race (D) in the transmission housing.

   NOTE: Be sure to install the 76.2 mm thrust washer with the "41382 RKY" mark facing downward.

4. Install the bearing outer race securely so there is no clearance between the bearing outer race, the 76.2 mm thrust washer, the 76 mm thrust shim, and the transmission housing, using the driver and the 72 x 75 mm attachment.

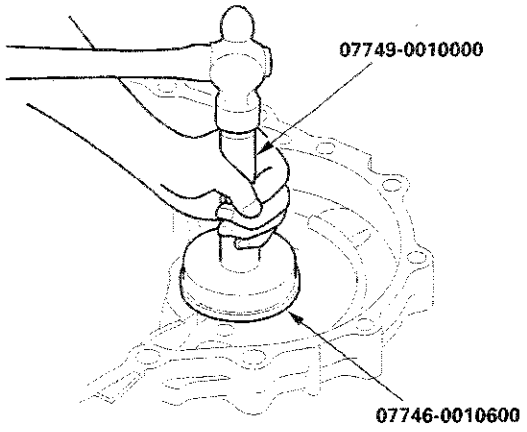

5. Install the differential assembly (A) in the torque converter housing (B), and install the gasket (C) and the dowel pins (D) on the torque converter housing.

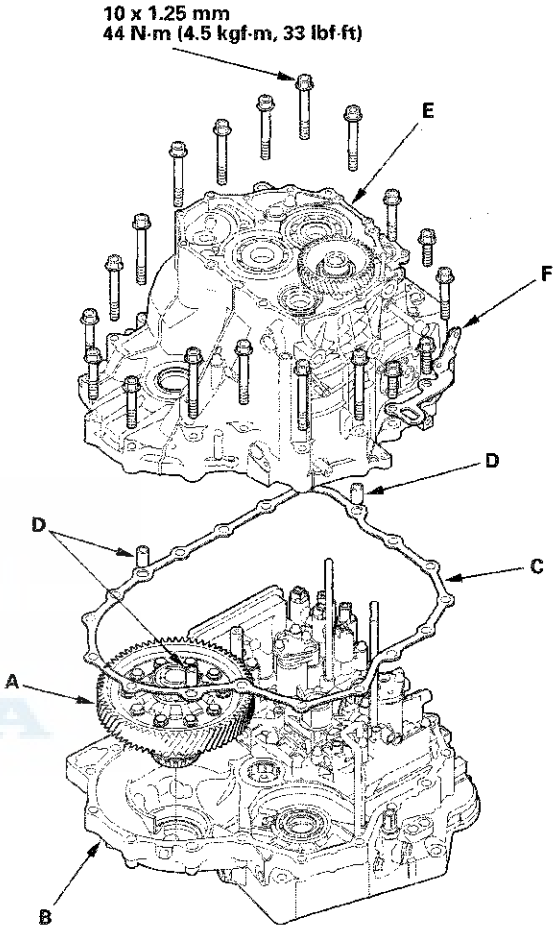

6. Install the transmission housing (E) and the transmission hanger (F), then tighten the bolts.

(cont'd)

Carrier Bearing Preload Inspection (cont'd)

7. Rotate the differential assembly in both directions to seat the bearings.

8. Measure the starting torque of the differential assembly in both directions using the preload inspection tool, a torque wrench (A), and a socket (B) at normal room temperature.

Standard
New Bearing: 2.7—3.9 N·m (28—40 kgf·cm, 24—35 lbf·in.)
Reused Bearing: 2.5—3.6 N·m (25—37 kgf·cm, 22—32 lbf·in.)

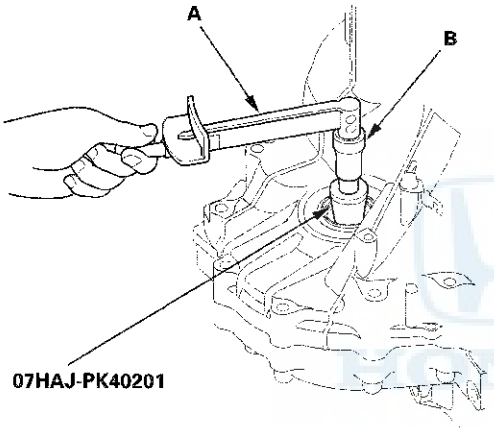

9. If the starting torque is out of standard, remove the 76 mm thrust shim and select a 76 mm thrust shim from the following table. Install a new 76 mm thrust shim and recheck. To increase the starting torque, increase the thickness of the 76 mm thrust shim. To decrease the starting torque, decrease the thickness of the 76 mm thrust shim. Changing the 76 mm thrust shim to the next size will increase or decrease starting torque about 0.3—0.4 N·m (3—4 kgf·cm, 2—3 lbf·in.).

THRUST SHIM, 76 mm

No.	Part Number	Thickness
S	41438-PX4-700	2.05 mm (0.080 in.)
T	41439-PX4-700	2.10 mm (0.082 in.)
U	41440-PX4-700	2.15 mm (0.084 in.)
A	41441-PK4-000	2.20 mm (0.086 in.)
B	41442-PK4-000	2.25 mm (0.088 in.)
C	41443-PK4-000	2.30 mm (0.090 in.)
D	41444-PK4-000	2.35 mm (0.092 in.)
E	41445-PK4-000	2.40 mm (0.094 in.)
F	41446-PK4-000	2.45 mm (0.096 in.)
G	41447-PK4-000	2.50 mm (0.098 in.)
H	41448-PK4-000	2.55 mm (0.099 in.)
I	41449-PK4-000	2.60 mm (0.101 in.)
J	41450-PK4-000	2.65 mm (0.103 in.)
K	41451-PK4-000	2.70 mm (0.105 in.)
L	41452-PK4-000	2.75 mm (0.107 in.)
M	41453-PK4-000	2.80 mm (0.109 in.)
N	41454-PK4-000	2.85 mm (0.111 in.)
O	41455-PK4-000	2.90 mm (0.113 in.)
P	41456-PK4-000	2.95 mm (0.115 in.)
Q	41457-PK4-000	3.00 mm (0.117 in.)
R	41458-PK4-000	3.05 mm (0.119 in.)
0A	41428-PRP-000	1.55 mm (0.061 in.)
0B	41429-PRP-000	1.60 mm (0.063 in.)
0C	41430-PRP-000	1.65 mm (0.065 in.)
0D	41431-PRP-000	1.70 mm (0.067 in.)
0E	41432-PRP-000	1.75 mm (0.069 in.)
0F	41433-PRP-000	1.80 mm (0.071 in.)
0G	41434-PRP-000	1.85 mm (0.073 in.)
0H	41435-PRP-000	1.90 mm (0.075 in.)
0I	41436-PRP-000	1.95 mm (0.077 in.)
0J	41437-PRP-000	2.00 mm (0.079 in.)

(cont'd)

THRUST SHIM, 76 mm (cont'd)

No.	Part Number	Thickness
A	41428-PAX-000	1.575 mm (0.062 in.)
B	41429-PAX-000	1.625 mm (0.064 in.)
C	41430-PAX-000	1.675 mm (0.066 in.)
D	41431-PAX-000	1.725 mm (0.068 in.)
E	41432-PAX-000	1.775 mm (0.070 in.)
F	41433-PAX-000	1.825 mm (0.072 in.)
G	41434-PAX-000	1.875 mm (0.074 in.)
H	41435-PAX-000	1.925 mm (0.076 in.)
I	41436-PAX-000	1.975 mm (0.078 in.)
J	41437-PAX-000	2.025 mm (0.080 in.)
K	41438-PAX-000	2.075 mm (0.082 in.)
L	41439-PAX-000	2.125 mm (0.084 in.)
M	41440-PAX-000	2.175 mm (0.086 in.)
N	41441-PAX-000	2.225 mm (0.088 in.)
O	41442-PAX-000	2.275 mm (0.090 in.)
P	41443-PAX-000	2.325 mm (0.092 in.)
Q	41444-PAX-000	2.375 mm (0.094 in.)
R	41445-PAX-000	2.425 mm (0.095 in.)
S	41446-PAX-000	2.475 mm (0.097 in.)
T	41447-PAX-000	2.525 mm (0.099 in.)
U	41448-PAX-000	2.575 mm (0.101 in.)
V	41449-PAX-000	2.625 mm (0.103 in.)
W	41450-PAX-000	2.675 mm (0.105 in.)
X	41451-PAX-000	2.725 mm (0.107 in.)
Y	41452-PAX-000	2.775 mm (0.109 in.)
Z	41453-PAX-000	2.825 mm (0.111 in.)
0A	41454-PAX-000	2.875 mm (0.113 in.)
0B	41455-PAX-000	2.925 mm (0.115 in.)
0C	41456-PAX-000	2.975 mm (0.117 in.)
0D	41457-PAX-000	3.025 mm (0.119 in.)

Navigation Tools: Click on the “Table of Contents” below, or use the Bookmarks to the left.

Driveline/Axle

Driveline/Axle

Special Tools 16-2
Component Location Index 16-3
Driveshaft Inspection 16-4
Driveshaft Removal 16-4
Driveshaft Disassembly 16-7
Dynamic Damper Replacement 16-10
Driveshaft Reassembly 16-11
Driveshaft Installation 16-20
Intermediate Shaft Removal 16-23
Intermediate Shaft Disassembly 16-23
Intermediate Shaft Reassembly 16-25
Intermediate Shaft Installation 16-28

Special Tools

Ref. No.	Tool Number	Description	Qty
①	07GAD-PH70201	Oil Seal Driver, 64 mm	1
②	07MAC-SL0A202	Ball Joint Remover, 28 mm	1
③	07MAD-PR90100	Installer Attachment, 45 mm	1
④	07NAF-SR30101	Half Shaft Base	1
⑤	07XAC-001030A	Threaded Adapter, 26 x 1.5 mm	1
⑥	07746-0010400	Bearing Driver Attachment, 52 x 55 mm	1
⑦	07746-0030400	Inner Bearing Driver Attachment, 35 mm	1
⑧	07749-0010000	Driver Handle, 15 x 135L	1
⑨	07947-SB00100	Oil Seal Driver, 44.5 mm	1

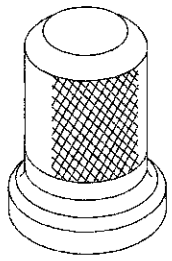
①, ⑨

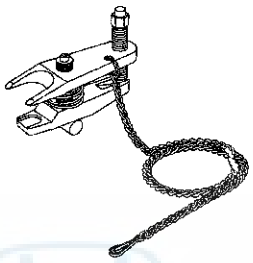
②

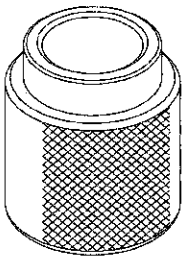
③

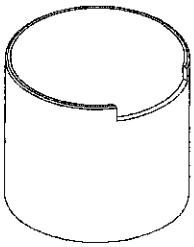
④

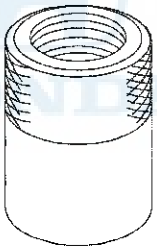
⑤

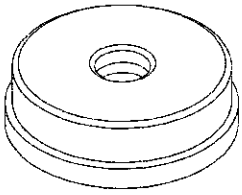
⑥

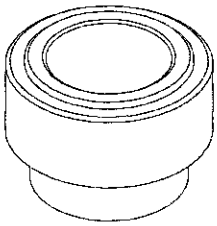
⑦

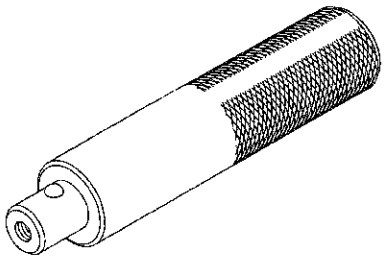
⑧

Component Location Index

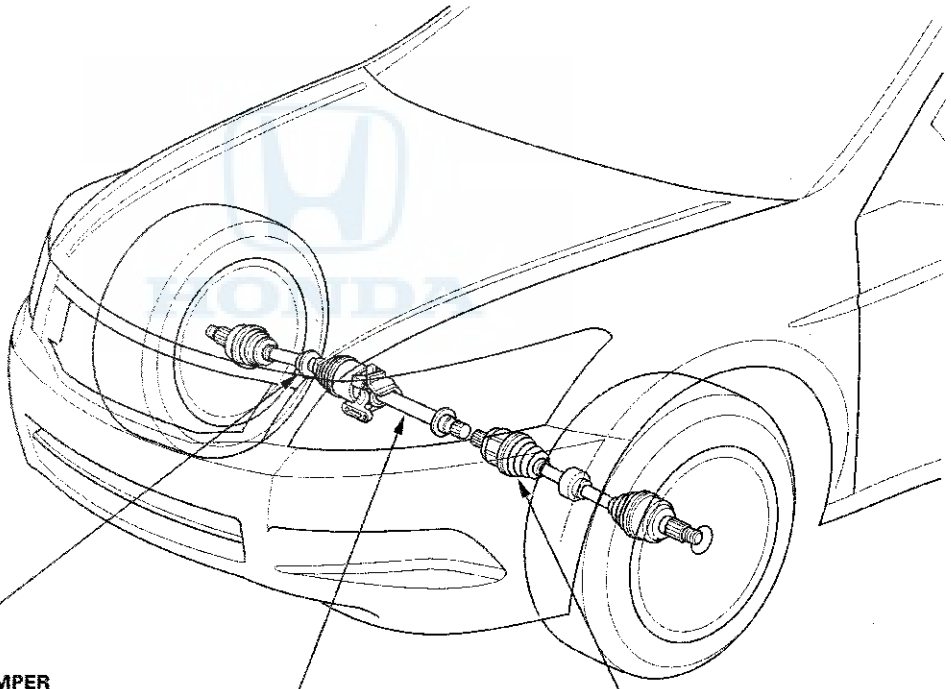

DYNAMIC DAMPER
Replacement, page 16-10

INTERMEDIATE SHAFT
Removal, page 16-23
Disassembly, page 16-23
Reassembly, page 16-25
Installation, page 16-28

DRIVESHAFT
Inspection, page 16-4
Removal, page 16-4
Disassembly, page 16-7
Reassembly, page 16-11
Installation, page 16-20

Driveshaft Inspection

1. Check the inboard boot (A) and the outboard boot (B) on the driveshaft (C) for cracks, damage, leaking grease, and loose boot bands (D). If any damage is found, replace the boot and boot bands.

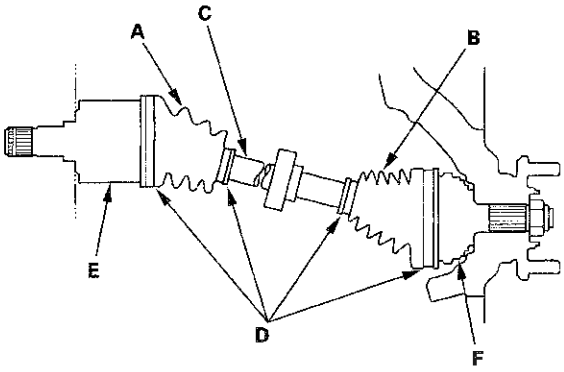

2. Check the driveshaft for cracks and damage. If any damage is found, replace the driveshaft.

3. Check the inboard joint (E) and the outboard joint (F) for cracks and damage. If any damage is found, replace the inboard joint or the outboard joint as an assembly.

4. Hold the inboard joint and turn the front wheel by hand, then make sure the joint is not excessively loose. If necessary, replace the inboard joint or the outboard joint as an assembly.

Driveshaft Removal

Special Tools Required
Ball joint remover, 28 mm 07MAC-SL0A202

1. Raise the vehicle on a lift.

2. Remove the front wheels.

3. Pry up the locking tab (A) on the spindle nut (B), then remove the nut.

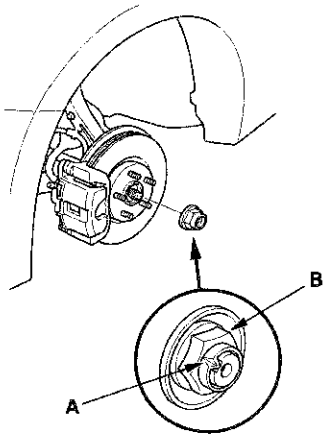

4. Drain the transmission fluid, then reinstall the drain plug with a new sealing washer:

   - Manual transmission (see page 13-5)
   - Automatic transmission (see page 14-231)

5. Hold the stabilizer link joint pin (A) with a hex wrench (B), and remove the flange nut (C). Separate the front stabilizer link (D) from the lower arm.

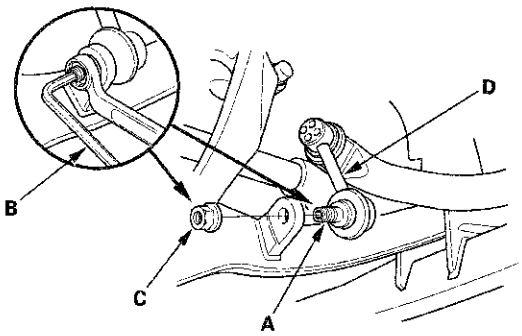

6. Remove the damper fork mounting nut (A), the damper fork mounting bolt (B), and the damper pinch bolt (C), then remove the damper fork (D).

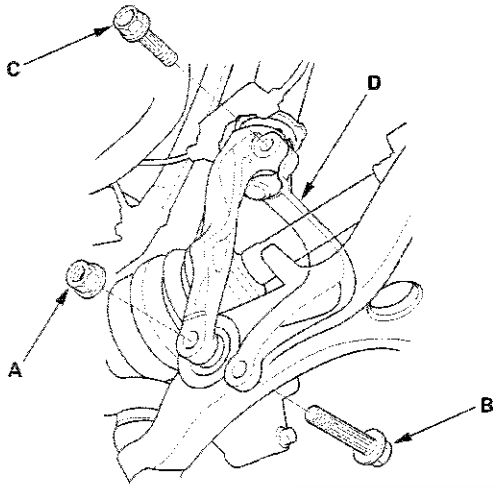

7. Remove the cotter pin (A) from the knuckle ball joint, then remove the castle nut (B). Separate the ball joint from the lower arm (C) using the ball joint remover (see page 18-11).

NOTE:
- Be careful not to damage the ball joint boot when installing the remover.
- Do not force or hammer on the lower arm, or pry between the lower arm and the knuckle. You could damage the ball joint.

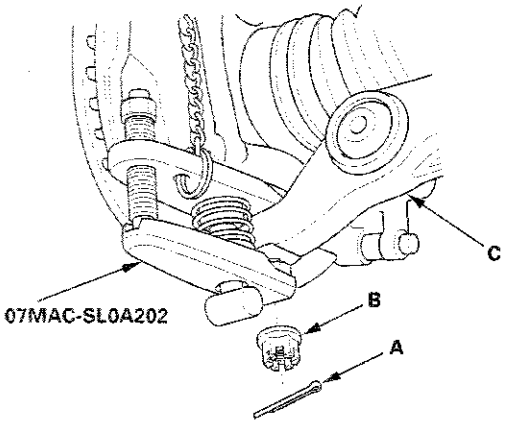

8. Pull the knuckle outward, and separate the outboard joint from the front hub using a plastic hammer.

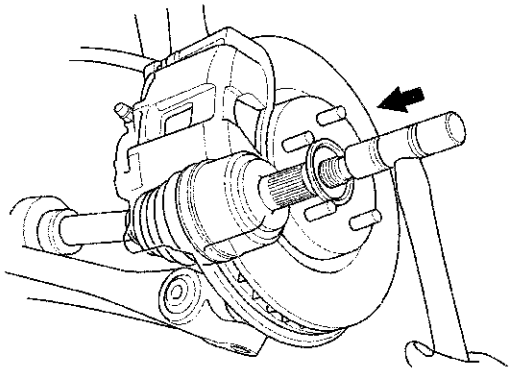

9. Left driveshaft: Pry the inboard joint (A) from the differential with a prybar. Remove the driveshaft as an assembly.

NOTE:
- Do not pull on the driveshaft (B), or the inboard joint may come apart. Pull the inboard joint straight out to avoid damaging the oil seal.
- Be careful not to damage the oil seal with the prybar.

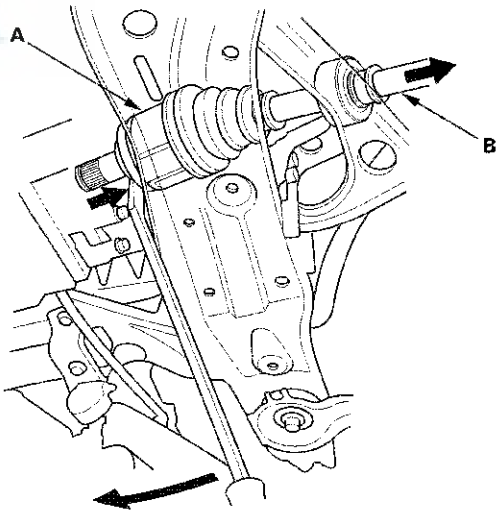

(cont'd)

Driveshaft Removal (cont'd)

10. Right driveshaft: Drive the inboard joint (A) off of the intermediate shaft using a drift and a hammer. Remove the driveshaft as an assembly.

    NOTE: Do not pull on the driveshaft (B), or the inboard joint may come apart.

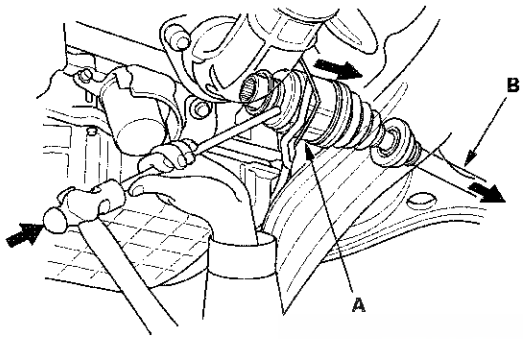

11. Remove the set ring (A) from the left driveshaft inboard joint.

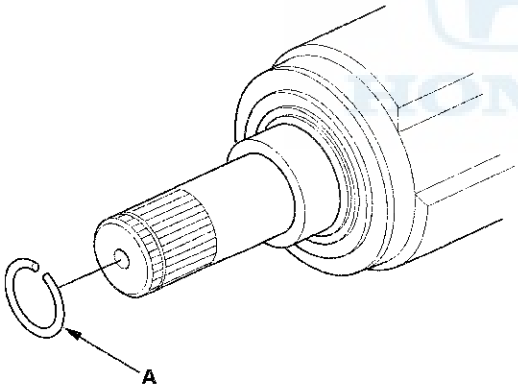

12. Remove the set ring (A) from the intermediate shaft.

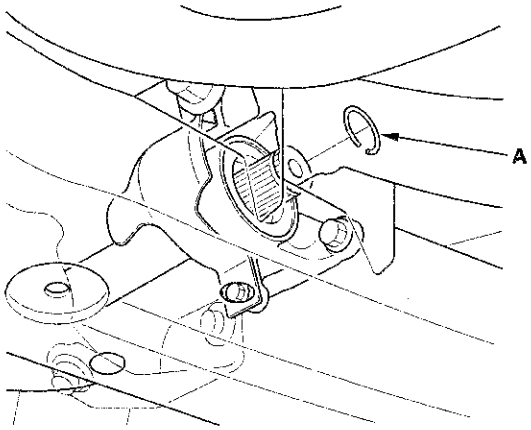

Driveshaft Disassembly

Special Tools Required
- Threaded adapter, 26 x 1.5 mm 07XAC-001030A
- Slide hammer, 5/8"-18 UNF, commercially available
- Puller, commercially available
- Boot band pliers, commercially available

Inboard Joint Side

1. Remove the boot bands. Be careful not to damage the boot.

   - If the boot band is a welded type (A), cut the boot band.
   - If the boot band is a double loop type (B), lift up the band end (C), and push it into the clip (D).
   - If the boot band is a low profile type (E), pinch the boot band using commercially available boot band pliers (F).

Welded type

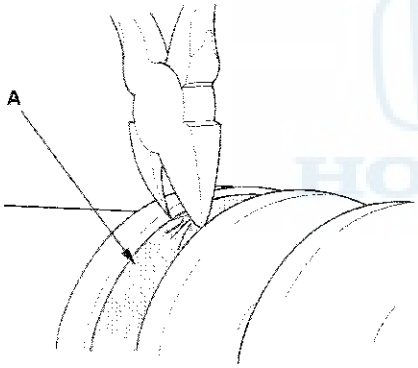

Double loop type

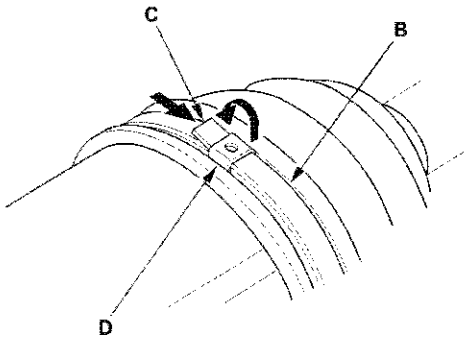

Low profile type

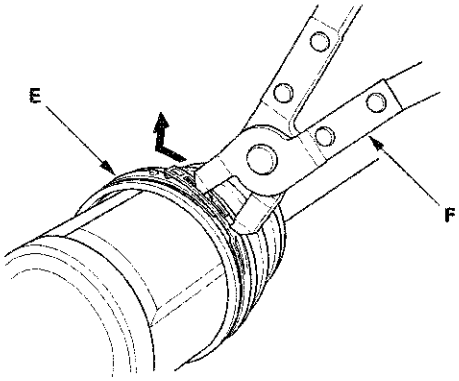

2. Make marks (A) on each roller (B) and the inboard joint (C) to identify the locations of the rollers to the grooves in the inboard joint. Then remove the inboard joint on a clean shop towel (D). Be careful not to drop the rollers when separating them from the inboard joint.

   NOTE: Do not engrave or scribe any marks on the rolling surface.

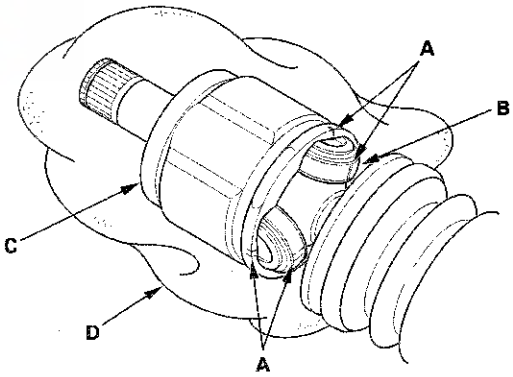

(cont'd)

Driveshaft Disassembly (cont'd)

3. Make marks (A) on the rollers (B) and the spider (C) to identify the locations of the rollers on the spider, then remove the rollers.

   NOTE: Do not engrave or scribe any marks on the rolling surface.

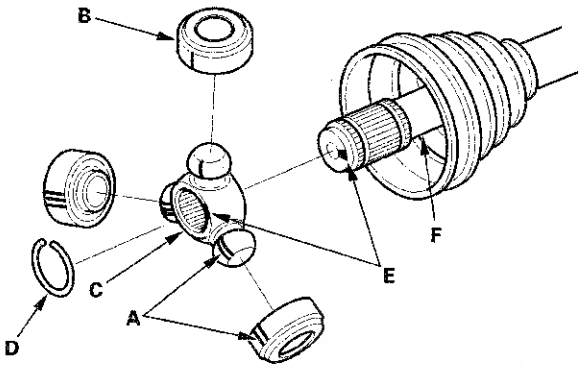

4. Remove the circlip (D).

5. Make marks (E) on the spider and driveshaft (F) to identify the position of the spider on the shaft.

6. Remove the spider.

   NOTE: If necessary, use a commercially available puller.

7. Wrap the splines on the driveshaft with vinyl tape (A) to prevent damaging the boot.

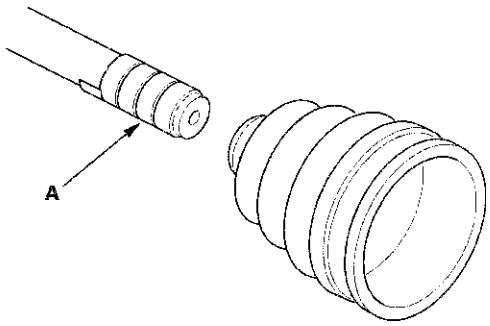

8. Remove the inboard boot. Be careful not to damage the boot.

9. Remove the vinyl tape.

Outboard Joint Side

1. Remove the boot bands (A). Lift up the three tabs (B) with a screwdriver, then release the band. Be careful not to damage the boot.

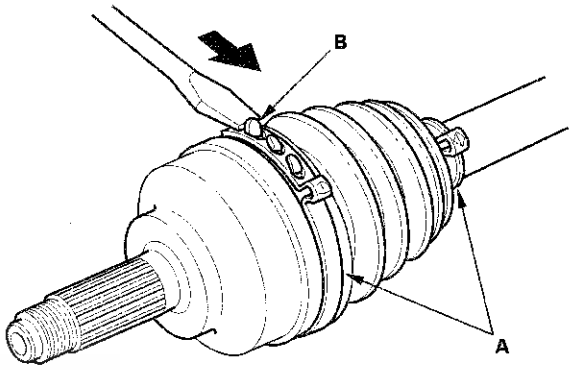

2. Slide the outboard boot (A) partially to the inboard joint side. Be careful not to damage the boot.

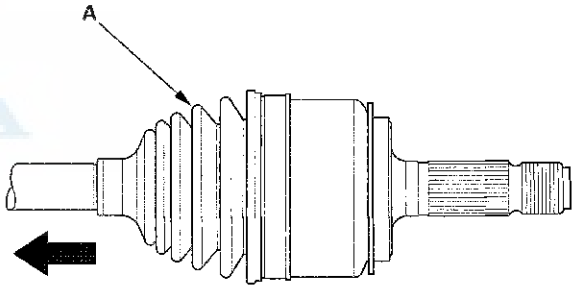

3. Wipe off the grease to expose the driveshaft and the outboard joint inner race.

4. Make a mark (A) on the driveshaft (B) at the same level as the outboard joint rim (C).

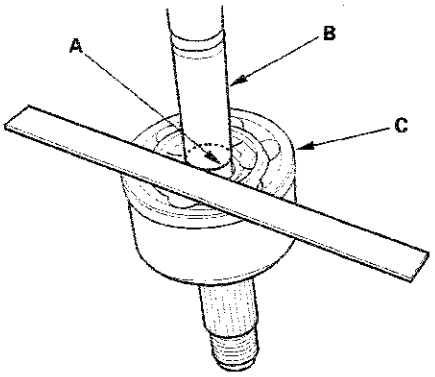

5. Securely clamp the driveshaft in a bench vise with a shop towel.

6. Remove the outboard joint (A) using the 26 x 1.5 mm threaded adapter (B) and a commercially available 5/8"-18 UNF slide hammer (C).

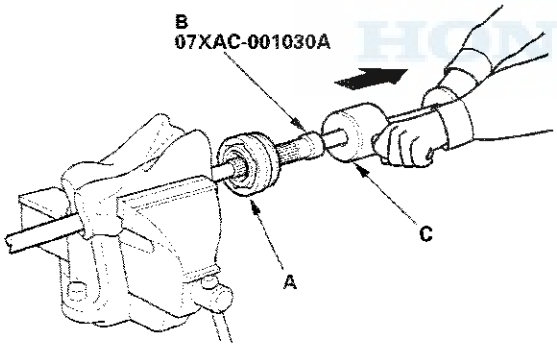

7. Remove the driveshaft from the bench vise.

8. Remove the stop ring from the driveshaft.

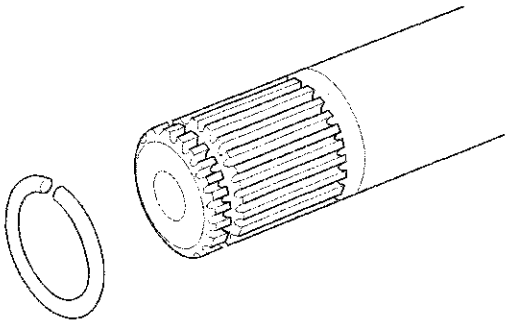

9. Wrap the splines on the driveshaft with vinyl tape (A) to prevent damaging the boot.

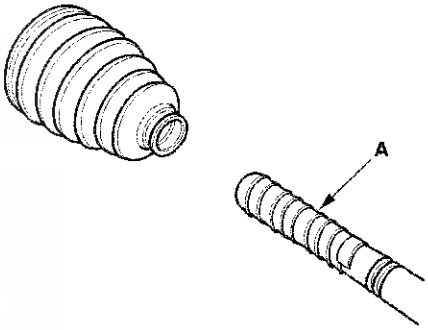

10. Remove the outboard boot. Be careful not to damage the boot.

11. Remove the vinyl tape.

Dynamic Damper Replacement

1. Remove the inboard joint (see page 16-7).
2. Remove the dynamic damper band (see step 1 on page 16-7).
3. Remove the dynamic damper (A).

Left driveshaft

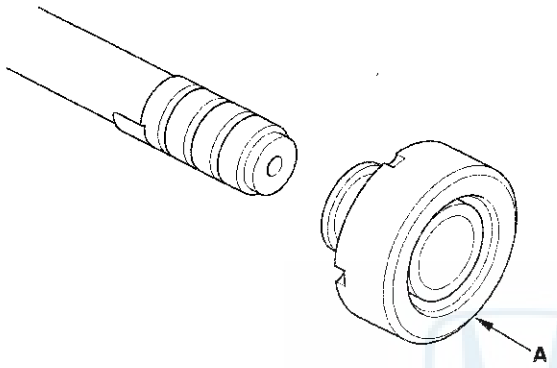

Right driveshaft

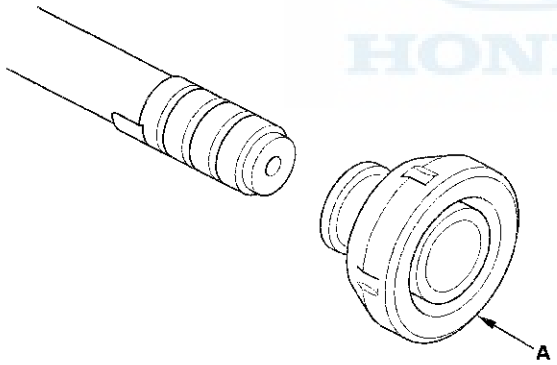

4. Install the new dynamic damper.

   NOTE: Be careful not to swap the dynamic dampers. Check the type of dynamic damper by its shape.

5. Adjust the specified distance (A) between the outboard joint side and the dynamic damper edge.

   NOTE: Check the type of dynamic damper by its shape.

Left drivershaft

A: 298.5—303.5 mm (11.75—11.95 in.)

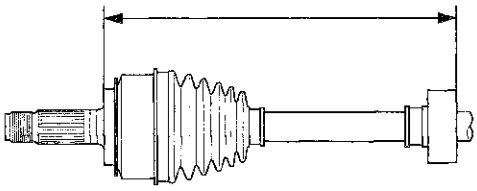

Right drivershaft

A: 292.5—297.5 mm (11.52—11.71 in.)

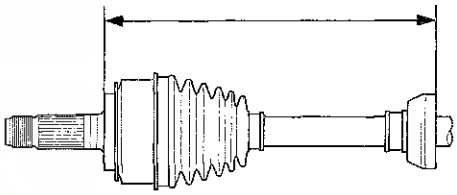

6. Install the dynamic damper band (see step 10 on page 16-14).
7. Install the inboard joint (see page 16-12).

Driveshaft Reassembly

Exploded View

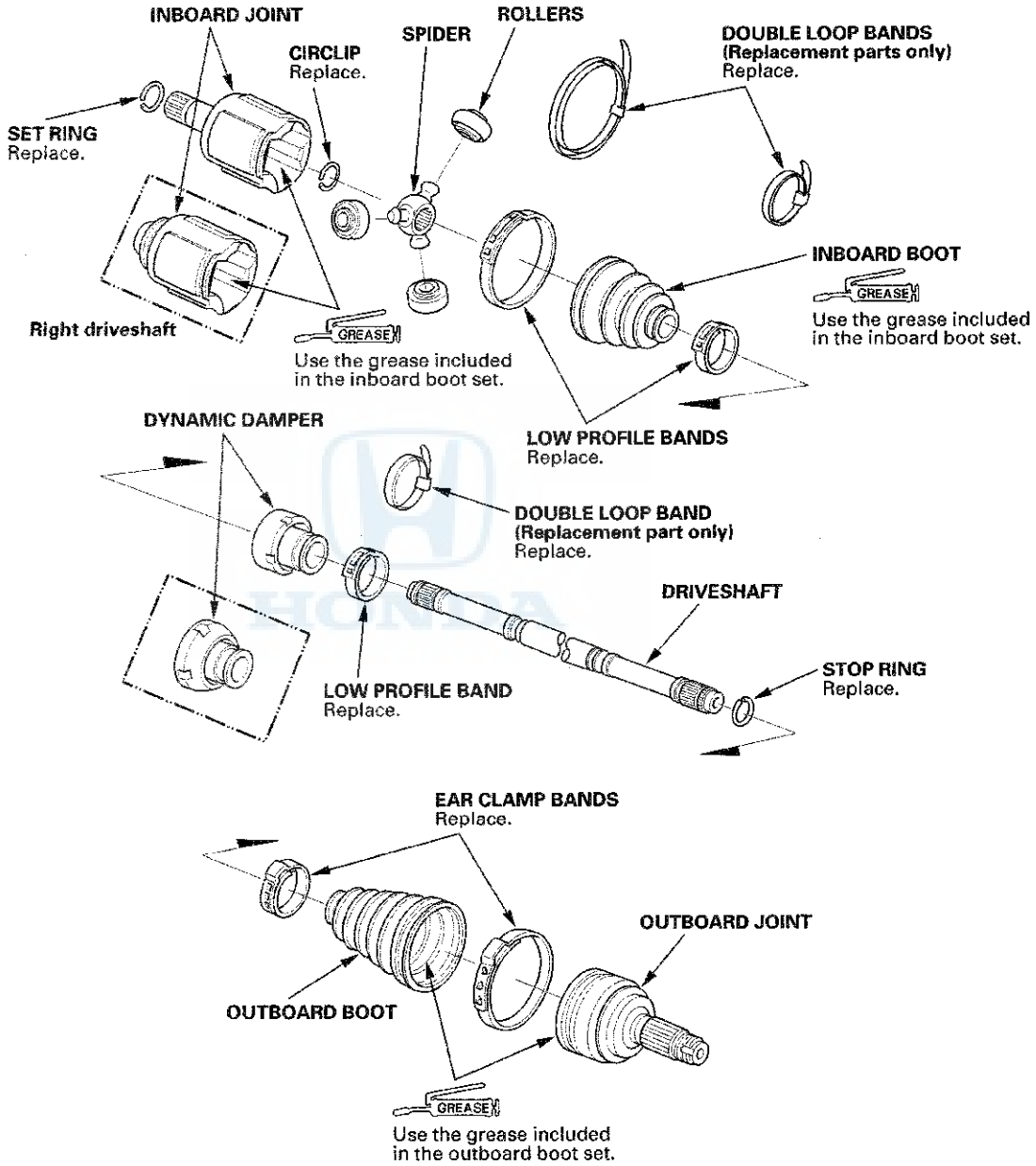

(cont'd)

Driveshaft Reassembly (cont'd)

Special Tools Required
- Boot band tool, KD-3191 or equivalent, commercially available
- Boot band pliers, Kent-Moore J-35910 or equivalent, commercially available
- Boot band pliers, commercially available

NOTE: Refer to the Exploded View, as needed, during this procedure.

Inboard Joint Side

1. Wrap the splines with vinyl tape (A) to prevent damaging the inboard boot.

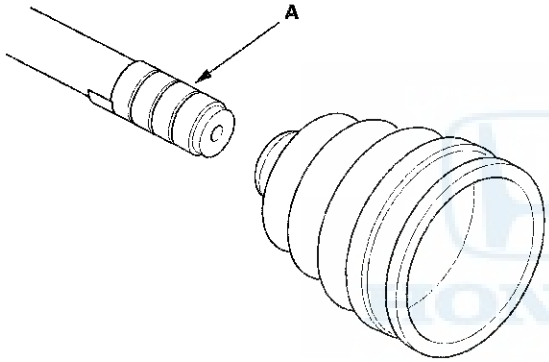

2. Install the inboard boot onto the driveshaft, then remove the vinyl tape. Be careful not to damage the inboard boot.

3. Install the spider (A) onto the driveshaft by aligning the marks (B) you made on the spider and the end of the driveshaft.

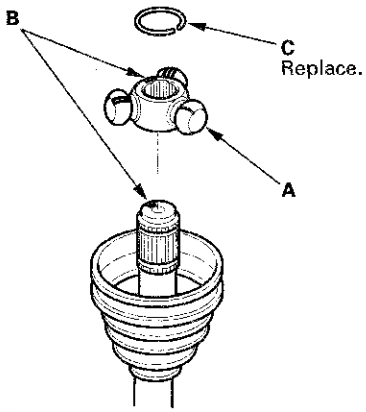

4. Install a new circlip (C) into the driveshaft groove. Always rotate the circlip in its groove to make sure it is fully seated.

5. Fit the rollers (A) onto the spider (B) with the high shoulders facing outward and note these items:
   - Reinstall the rollers in their original positions on the spider by aligning the marks (C) you made.
   - Hold the driveshaft pointed up to prevent the rollers from falling off.

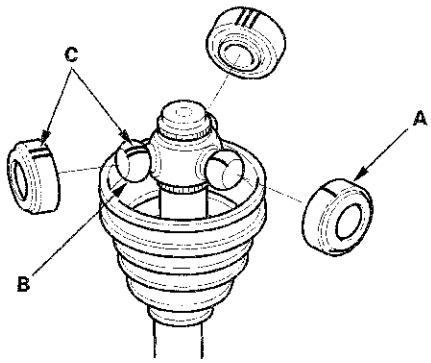

6. Pack the inboard joint with the joint grease included in the new inboard boot set.

Grease quantity
Inboard joint:

Model		Quantity
K24Z2 engine model	M/T	150—160 g (5.3—5.6 oz)
	A/T	130—140 g (4.6—4.9 oz)
K24Z3 engine model		150—160 g (5.3—5.6 oz)

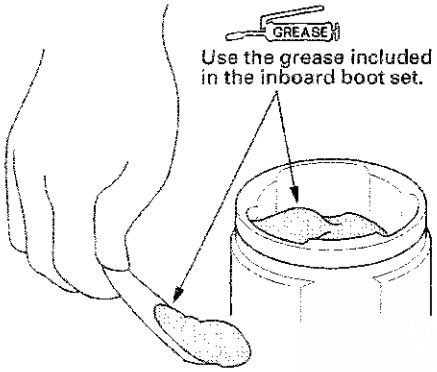

7. Fit the inboard joint onto the driveshaft and note these items:

- Reinstall the inboard joint onto the driveshaft by aligning the marks (A) you made on the inboard joint and the rollers.
- Hold the driveshaft so the inboard joint is pointing up to prevent it from falling off.

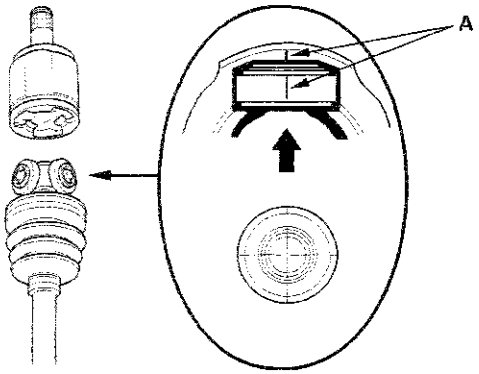

8. Fit the boot ends (A) onto the driveshaft (B) and the inboard joint (C).

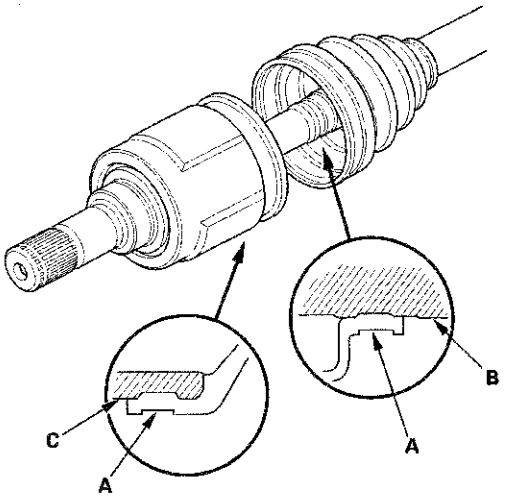

(cont'd)

Driveshaft Reassembly (cont'd)

9. Adjust the length (A) of the driveshafts to the figure as shown, then adjust the boots to halfway between full compression and full extension. Bleed excess air from the boots by inserting a flat-tipped screwdriver between the boot and the joint.

Left driveshaft

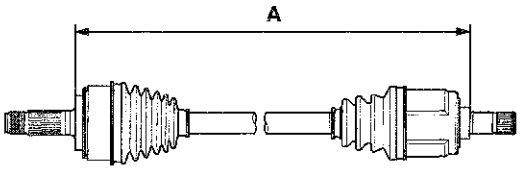

Right driveshaft

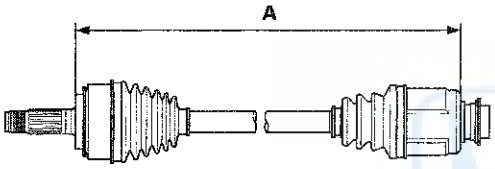

Model		Left/Right Driveshaft	Specified Length (A)
K24Z2 engine model	M/T	Left	554—559 mm (21.81—22.01 in.)
		Right	480—485 mm (18.90—19.09 in.)
	A/T	Left	554—559 mm (21.81—22.01 in.)
		Right	477—482 mm (18.78—18.98 in.)
K24Z2 engine model		Left	554—559 mm (21.81—22.01 in.)
		Right	480—485 mm (18.90—19.09 in.)

10. Install new boot bands.

- For the double loop type, go to step 11.
- For the low profile type, go to step 20.

11. Fit the boot ends onto the driveshaft and the inboard joint, then install a new double loop band (A) onto the boot (B).

NOTE: Pass the end of the new double loop band through the clip (C) twice in the direction of the forward rotation of the driveshaft.

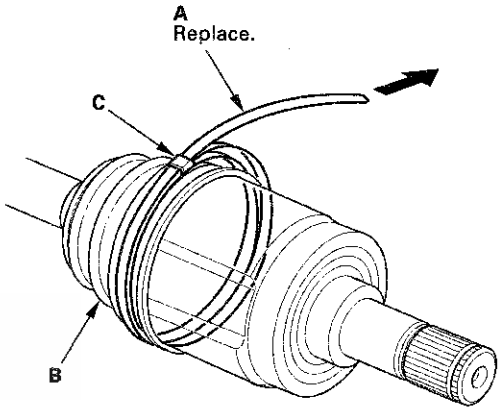

12. Pull up the slack in the band by hand.

13. Mark position (A) on the band 10—14 mm (0.4—0.6 in.) from the clip (B).

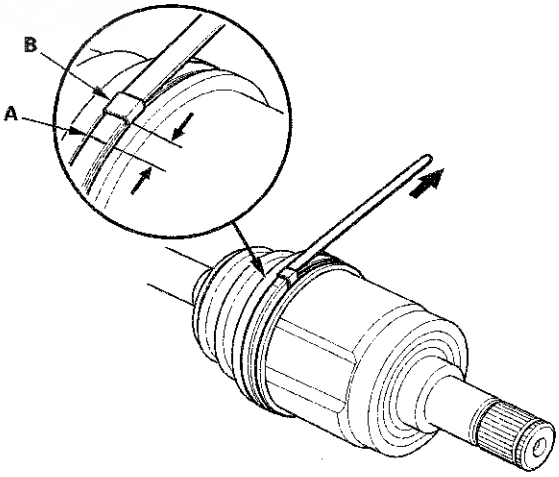

14. Thread the free end of the band through the nose section of the commercially available boot band tool KD-3191 or equivalent (A), and into the slot on the winding mandrel (B).

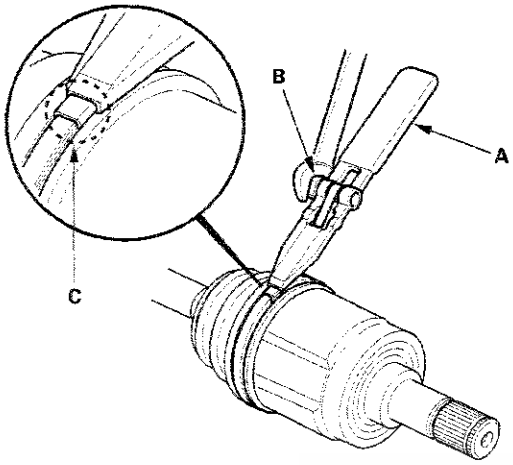

15. Using a wrench on the winding mandrel of the boot band tool, tighten the band until the marked spot (C) on the band meets the edge of the clip.

16. Lift up the boot band tool to bend the free end of the band 90 degrees to the clip. Center-punch the clip, then fold over the remaining tail onto the clip.

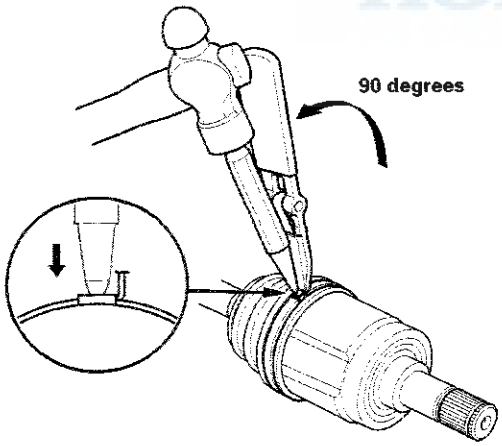

17. Unwind the boot band tool, and cut off the excess free end of the band to leave a 5—10 mm (0.2—0.4 in.) tail protruding from the clip.

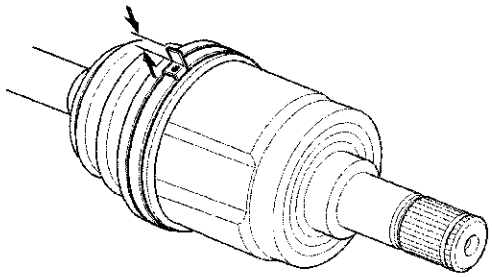

18. Bend the band end (A) by tapping it down with a hammer.

NOTE:
- Make sure the band and the clip do not interfere with anything on the vehicle and the band does not move.
- Clean any grease remaining on the surrounding surfaces.

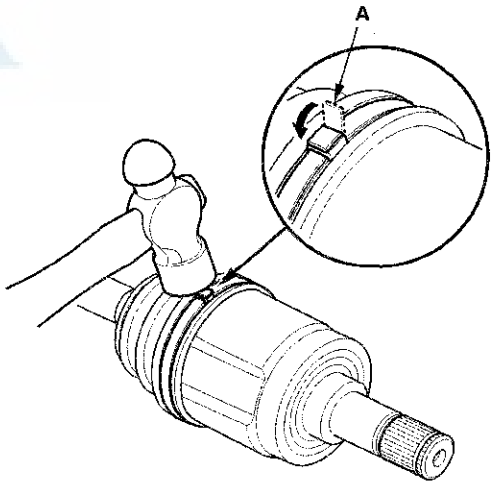

19. Repeat steps 11 through 18 for the band on the other end of the boot.

(cont'd)

Driveshaft Reassembly (cont'd)

20. Install the new low profile band (A) onto the boot (B), then hook the tab (C) of the band.

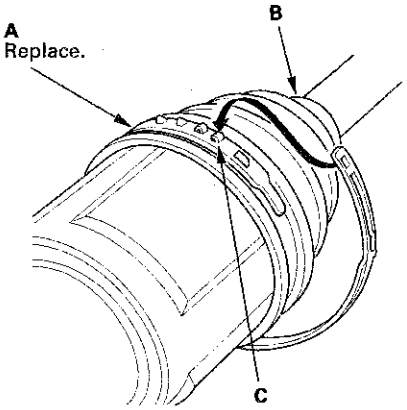

21. Close the hook portion of the band with commercially available boot band pliers (A), then hook the tabs (B) of the band.

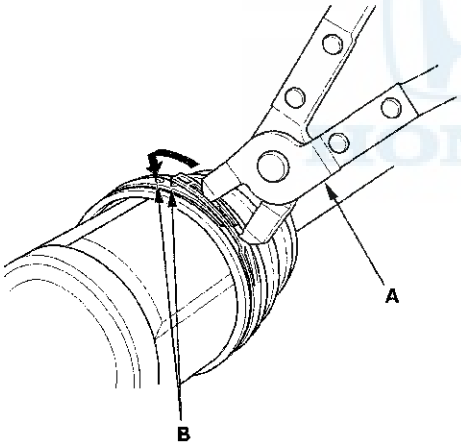

22. Install the boot band on the other end of the boot, and repeat steps 20 and 21.

Outboard Joint Side

1. Wrap the splines with vinyl tape (A) to prevent damaging the outboard boot.

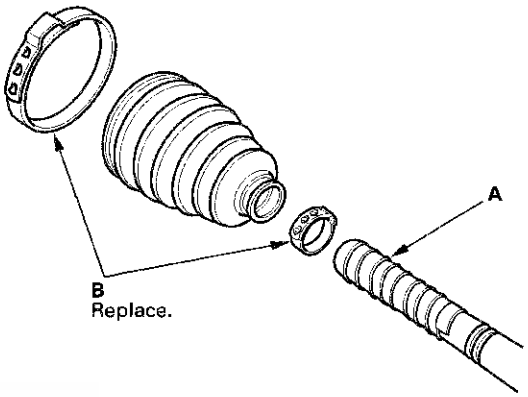

2. Install the new ear clamp bands (B) and the outboard boot, then remove the vinyl tape. Be careful not to damage the outboard boot.

3. Install a new stop ring (A) in the driveshaft groove (B).

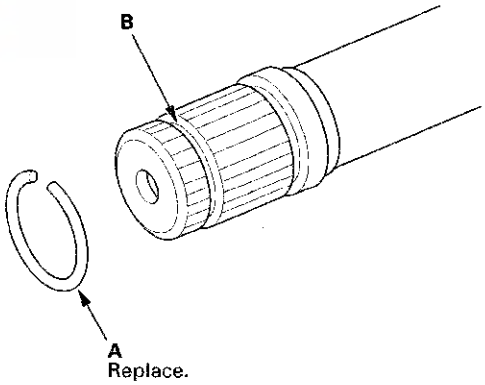

4. Pack about 35 g (1.2 oz) grease included in the new outboard boot set into the driveshaft hole in the outboard joint.

   NOTE: If you are installing a new outboard joint, the grease is already installed.

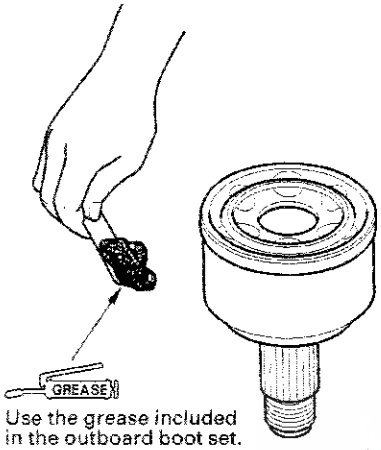

Use the grease included in the outboard boot set.

5. Insert the driveshaft (A) into the outboard joint (B) until the stop ring (C) is close to the joint.

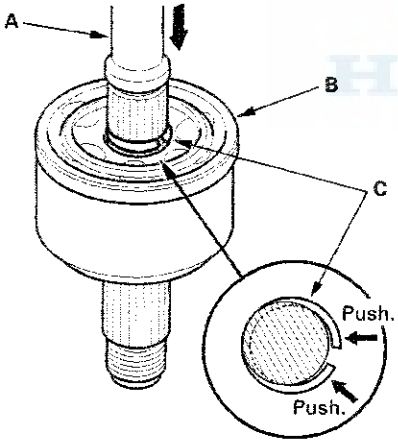

6. To completely seat the outboard joint, pick up the driveshaft and joint, and tap or hit the assembly onto a hard surface from a height of about 10 cm (4 in.).

   NOTE: Do not use a hammer as excessive force may damage the driveshaft. Be careful not to damage the threaded section (A) of the outboard joint.

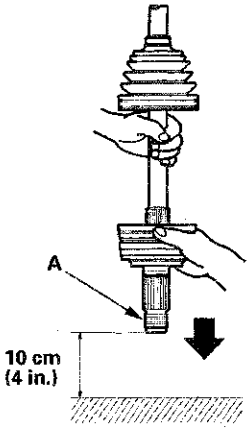

7. Check the alignment of the paint mark (A) you made with the outboard joint rim (B).

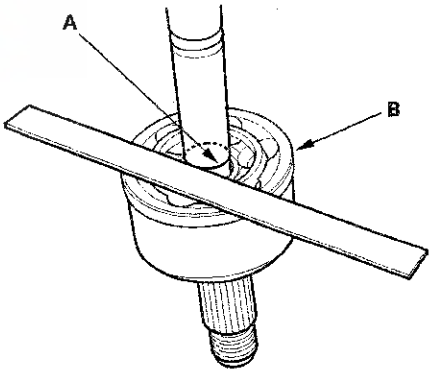

(cont'd)

Driveshaft Reassembly (cont'd)

8. Pack the outboard joint (A) with the remaining joint grease included in the new outboard boot set.

Total grease quantity
Outboard joint:

Model		Quantity
K24Z2 engine model	M/T	140—150 g (4.9—5.3 oz)
	A/T	105—115 g (3.7—4.1 oz)
K24Z3 engine model		140—150 g (4.9—5.3 oz)

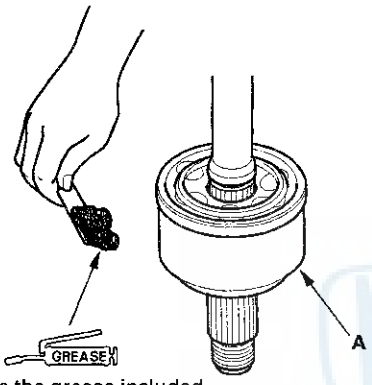

Use the grease included in the outboard boot set.

9. Fit the boot ends (A) onto the driveshaft (B) and the outboard joint (C). Bleed any excess air from the boot by inserting a flat-tipped screwdriver between the boot and the joint.

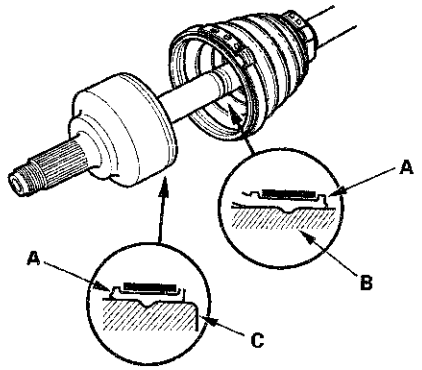

10. Inspect the length (A) of the driveshafts to the figure as shown, then adjust the boots to halfway between full compression and full extension.

Left driveshaft

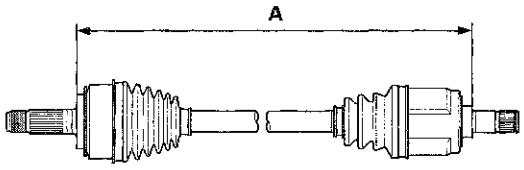

Right driveshaft

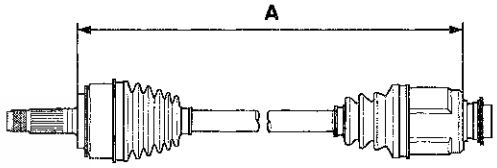

Model		Left/Right Driveshaft	Specified Length (A)
K24Z2 engine model	M/T	Left	554—559 mm (21.81—22.01 in.)
		Right	480—485 mm (18.90—19.09 in.)
	A/T	Left	554—559 mm (21.81—22.01 in.)
		Right	477—482 mm (18.78—18.98 in.)
K24Z3 engine model		Left	554—559 mm (21.81—22.01 in.)
		Right	480—485 mm (18.90—19.09 in.)

11. Close the ear portion (A) of the band with commercially available boot band pliers (Kent-Moore J-35910 or equivalent) (B).

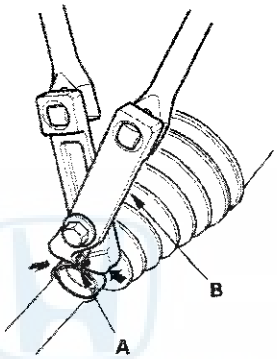

12. Check the clearance between the closed ear portion of the band. If the clearance is not within the standard, close the ear portion of the band tighter.

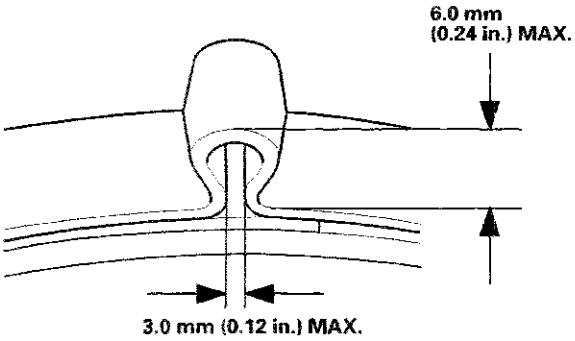

13. Repeat steps 11 and 12 for the band on the other end of the boot.

Driveshaft Installation

NOTE: Before starting installation, make sure the mating surfaces of the joint and the splined section are clean.

1. Apply about 5 g (0.18 oz) moly 60 paste (P/N 08734-0001) to the contact area (A) of the outboard joint and the front wheel bearing.

   NOTE: The paste helps to prevent noise and vibration.

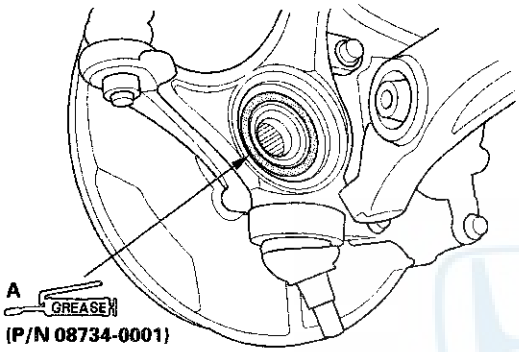

2. Install a new set ring (A) onto the set ring groove (B) of the left driveshaft inboard joint.

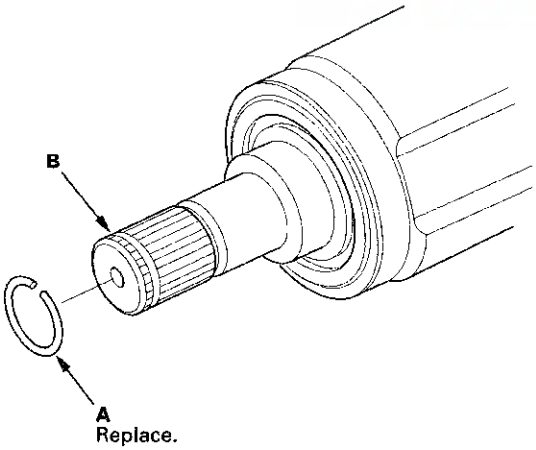

3. Install a new set ring (A) onto the set ring groove (B) of the intermediate shaft.

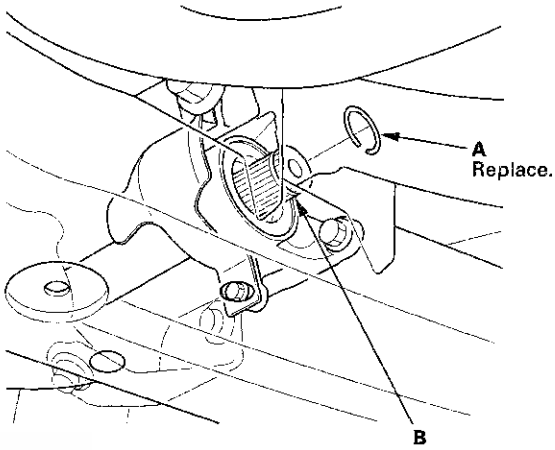

4. Apply 0.5—1.0 g (0.02—0.04 oz) of super high temp urea grease (P/N 08798-9002) to the whole splined surface (A) of the right driveshaft. After applying grease, remove the grease from the splined grooves at intervals of 2—3 splines and from the set ring groove (B) so that air can bleed from the intermediate shaft.

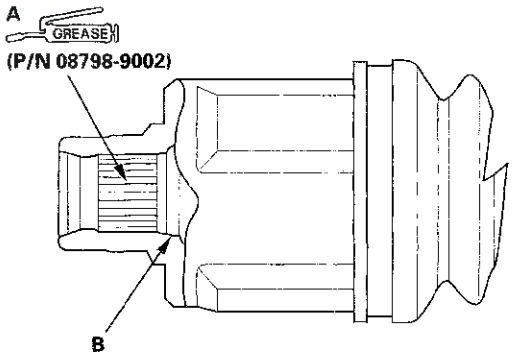

5. Clean the areas where the driveshaft contacts the differential thoroughly with solvent or brake cleaner, and dry with compressed air.

   NOTE: Do not wash the rubber parts with solvent.

6. Insert the inboard end (A) of the driveshaft into the differential (B) or intermediate shaft (C) until the set ring (D) locks in the groove (E).

   NOTE: Insert the driveshaft horizontally to prevent damaging the oil seal.

Left

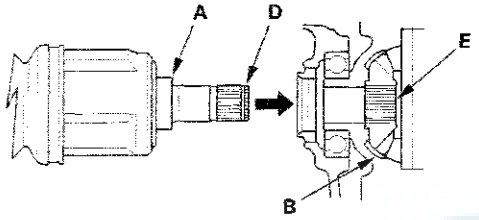

Right

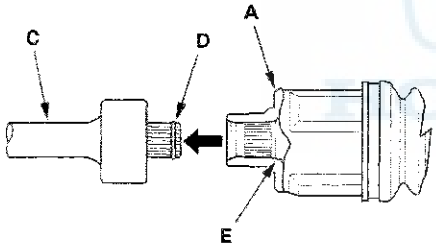

7. Install the outboard joint (A) into the front hub on the knuckle.

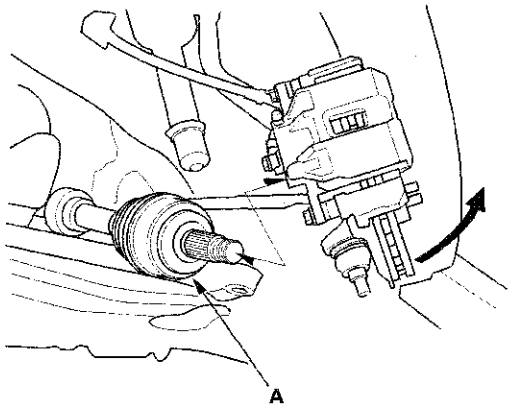

8. Wipe off any grease contamination from the ball joint tapered section and threads, then install the knuckle (A) onto the lower arm (B). Be careful not to damage the ball joint boot (C). Wipe off the grease before tightening the nut at the ball joint. Torque the castle nut (D) to the lower torque specification, then tighten it only far enough to align the slot with the ball joint pin hole.

   NOTE:
   - Make sure the ball joint boot is not damaged or cracked.
   - Do not align the nut by loosening it.

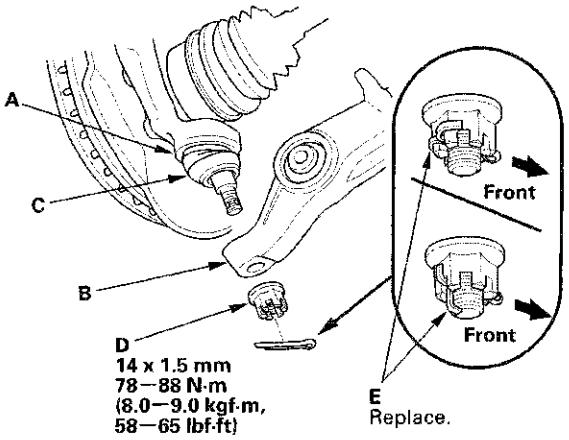

9. Install a new cotter pin (E) into the ball joint pin hole, and bend the cotter pin as shown.

(cont'd)

Driveshaft Installation (cont'd)

10. Install the damper fork (A) over the driveshaft and onto the lower arm. Install the damper in the damper fork so the aligning tab (B) is aligned with the slot in the damper fork. Loosely install the damper pinch bolt (C).

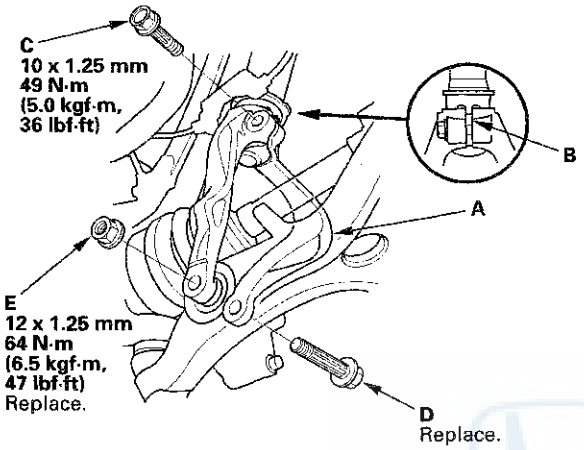

11. Loosely install a new damper fork mounting bolt (D) and a new damper fork mounting nut (E).

12. Connect the front stabilizer link (A) to the lower arm, and loosely install a new flange nut. Hold the stabilizer link joint pin (B) with a hex wrench (C), and tighten the new flange nut (D).

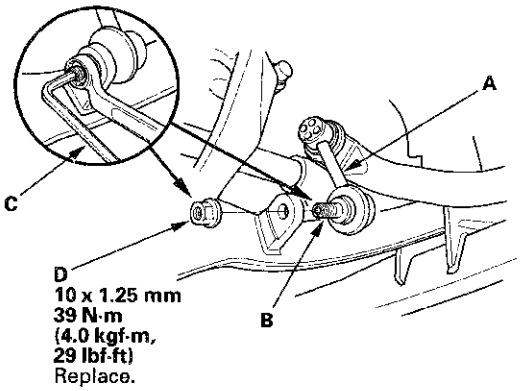

13. Place a floor jack under the lower arm, and raise the suspension to load it with the vehicle's weight.

    NOTE: Do not put the floor jack under the ball joint.

14. Tighten the damper pinch bolt and the damper fork mounting nut while holding the damper fork mounting bolt to the specified torque values.

15. Apply a small amount of engine oil to the seating surface of the new spindle nut (A).

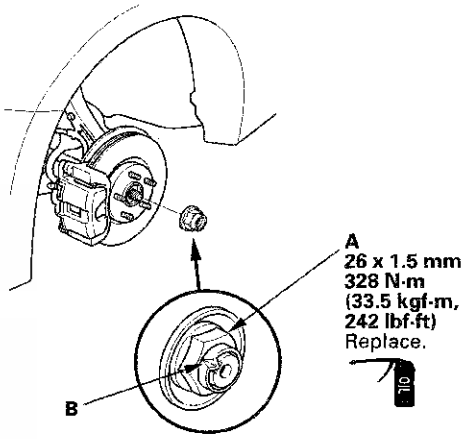

16. Install the spindle nut, then tighten it. After tightening, use a drift to stake the spindle nut shoulder (B) against the driveshaft.

17. Clean the mating surfaces of the brake disc and the wheel, then install the front wheels.

18. Turn the wheel by hand, and make sure there is no interference between the driveshaft and surrounding parts.

19. Refill the transmission with the recommended transmission fluid:

    - Manual transmission (see page 13-5)
    - Automatic transmission (see page 14-231)

20. Remove the floor jack, then lower the vehicle on the lift.

21. Check the wheel alignment, and adjust it if necessary (see page 18-5).

22. Test-drive the vehicle.

Intermediate Shaft Removal

1. Drain the transmission fluid. Reinstall the drain plug using a new sealing washer:

   - Manual transmission (see page 13-5)
   - Automatic transmission (see page 14-231)

2. Remove the right driveshaft (see page 16-4).

3. Remove the flange bolt (A) and the two dowel bolts (B).

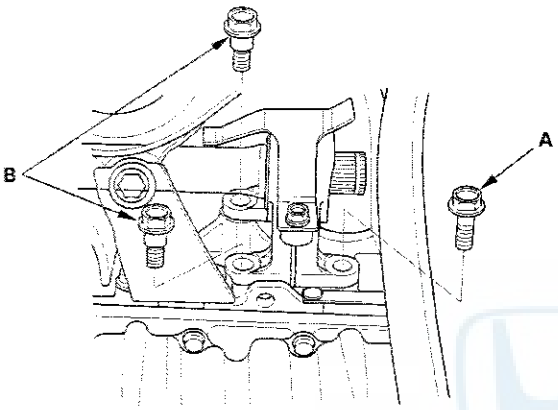

4. Remove the intermediate shaft (A) from the differential. Hold the intermediate shaft horizontally until it is clear of the differential to prevent damaging the oil seal (B).

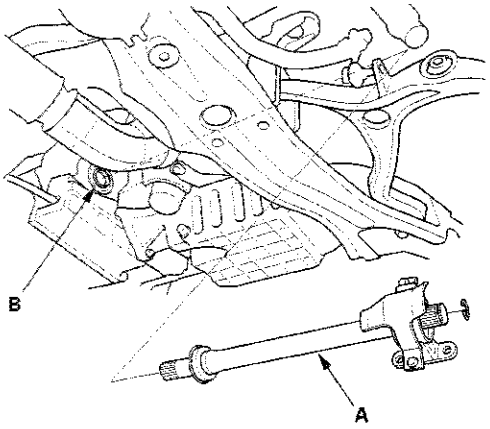

Intermediate Shaft Disassembly

Special Tools Required
- Half shaft base 07NAF-SR30101
- Oil seal driver, 44.5 mm 07947-SB00100

1. Remove the heat shield (A).

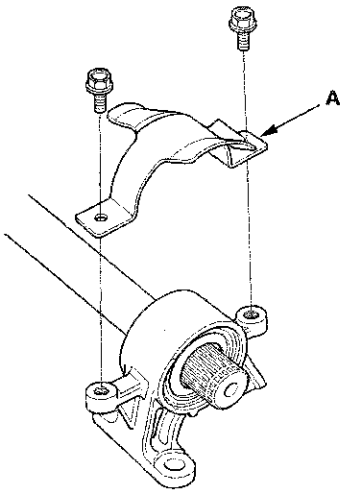

2. Remove the outer seal (A) and the external snap ring (B) from the intermediate shaft (C).

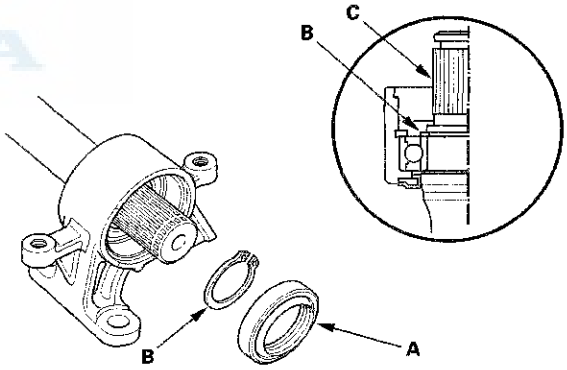

(cont'd)

Intermediate Shaft Disassembly (cont'd)

3. Press the intermediate shaft (A) out of the intermediate shaft bearing (B) using the half shaft base (C) and a press. Be careful not to damage the bearing support ring (D) on the intermediate shaft during disassembly.

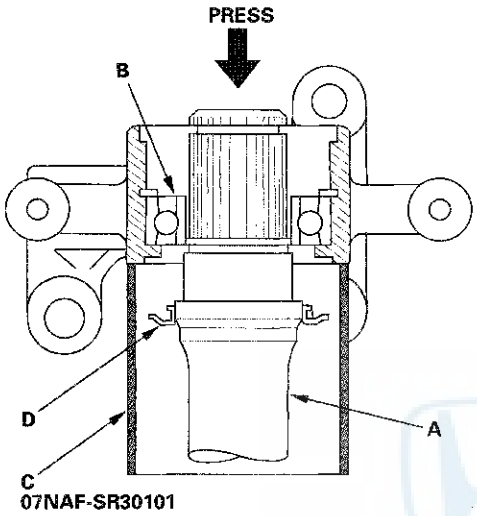

4. Remove the internal snap ring (A) from the bearing support (B).

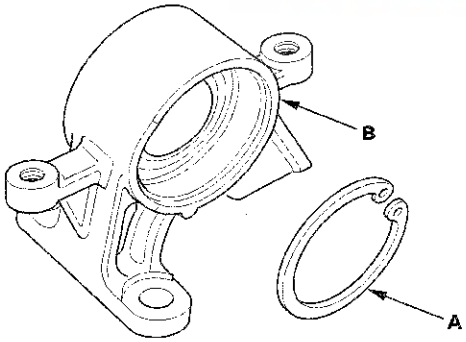

5. Press the intermediate shaft bearing (A) out of the bearing support (B) using the 44.5 mm oil seal driver (C), the half shaft base (D), and a press.

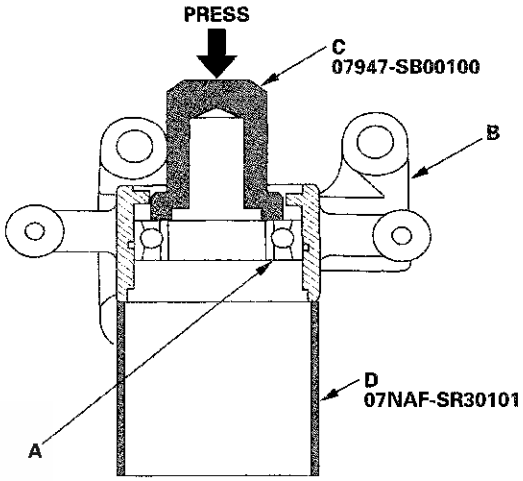

Intermediate Shaft Reassembly

Exploded View

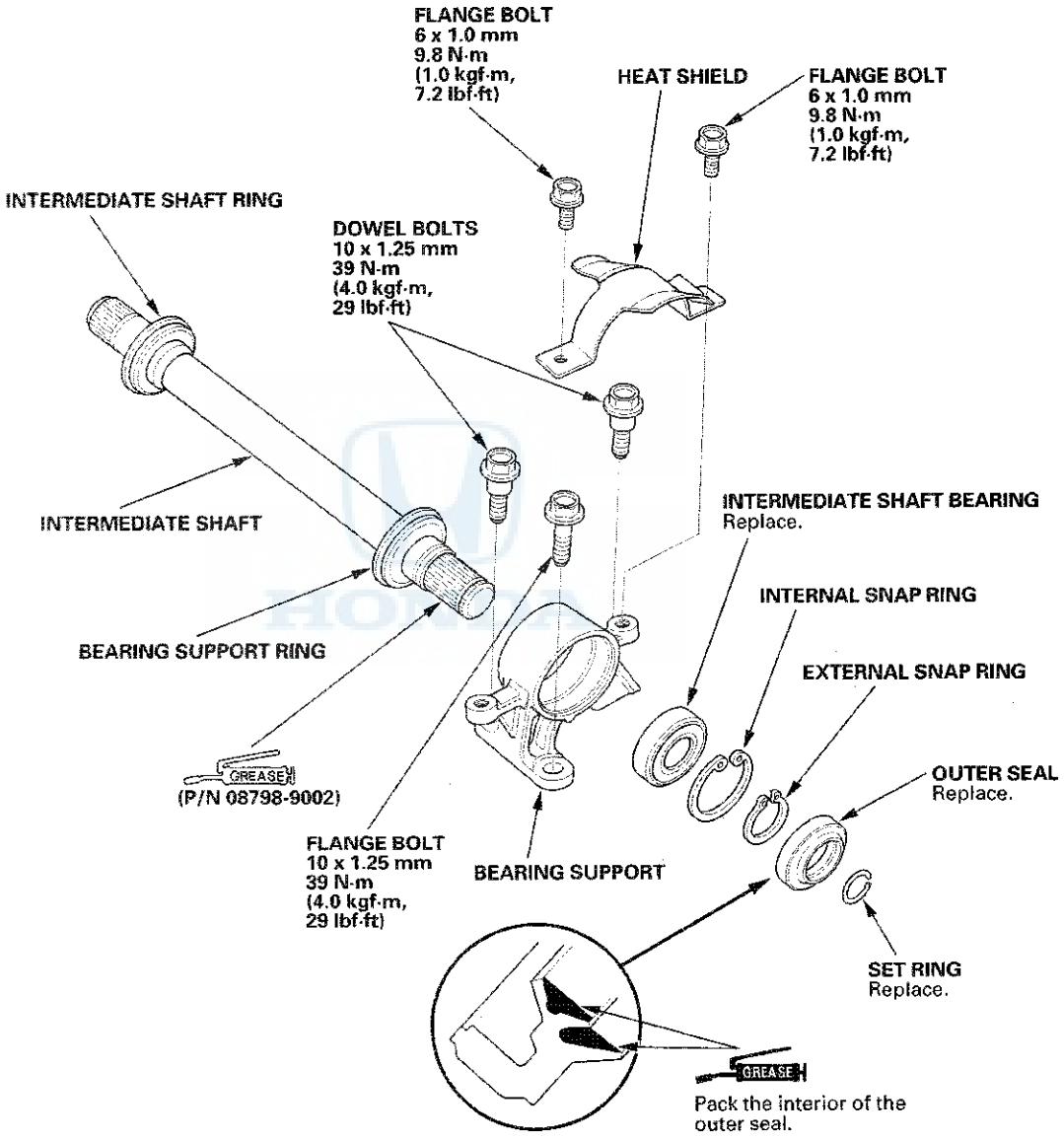

(cont'd)

Intermediate Shaft Reassembly (cont'd)

Special Tools Required
- Oil seal driver, 64 mm 07GAD-PH70201
- Half shaft base 07NAF-SR30101
- Bearing driver attachment, 52 x 55 mm 07746-0010400
- Inner bearing driver attachment, 35 mm 07746-0030400
- Driver handle, 15 x 135L 07749-0010000
- Installer attachment, 45 mm 07MAD-PR90100

NOTE: Refer to the Exploded View, as needed, during this procedure.

1. Clean the disassembled parts with solvent, and dry them with compressed air.

   NOTE: Do not wash the rubber parts with solvent.

2. Press the new intermediate shaft bearing (A) into the bearing support (B) using the 52 x 55 mm bearing driver attachment (C), the 15 x 135L driver handle (D), the half shaft base (E), and a press.

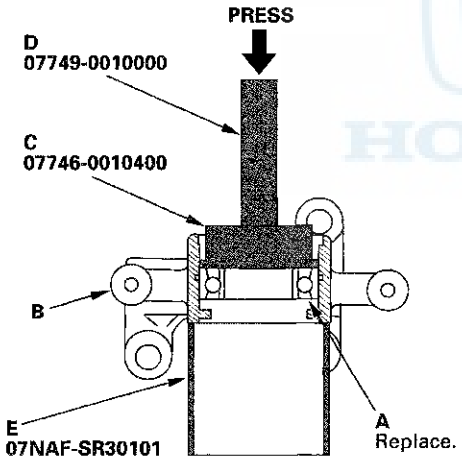

3. Install the internal snap ring (A) in the groove (B) of the bearing support.

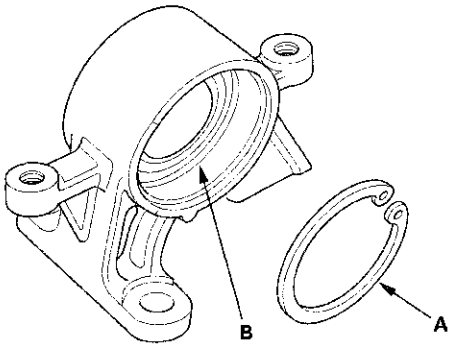

4. Press the intermediate shaft (A) into the shaft bearing (B) using the 35 mm inner bearing driver attachment (C) and a press.

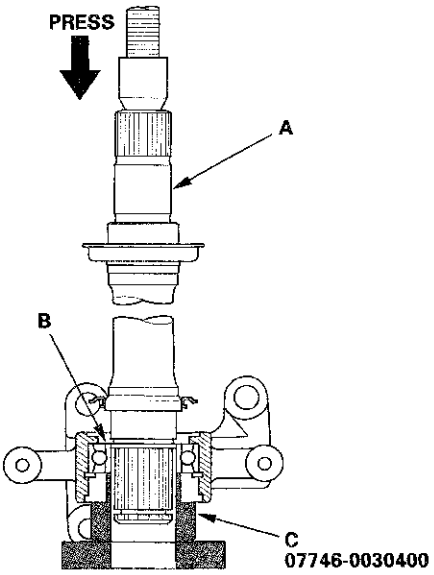

5. Install the external snap ring (A) in the groove of the intermediate shaft (B).

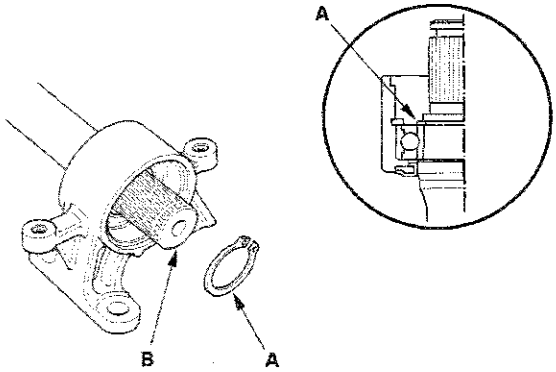

6. Install a new outer seal (A) into the bearing support (B) using the 45 mm installer attachment (C), 64 mm oil seal driver (D), the half shaft base (E), and a press. Press in the seal until it is 4 ± 0.2 mm (0.16 ±0.008 in.) (F) below the surface of the bearing support end.

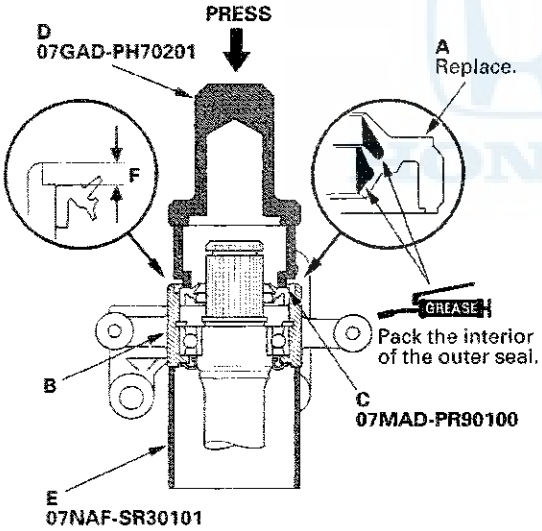

7. Install the heat shield (A).

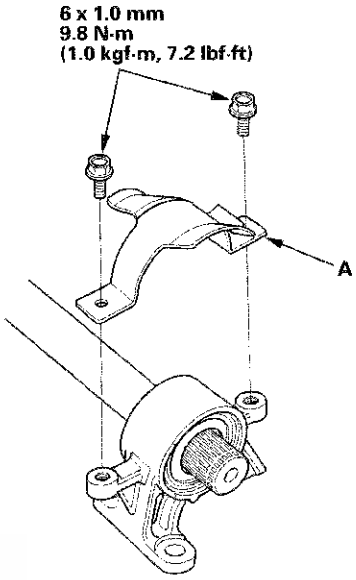

Intermediate Shaft Installation

1. Clean the areas where the intermediate shaft contacts the differential thoroughly with solvent or brake cleaner, and dry with compressed air.

   NOTE: Do not wash the rubber parts with solvent.

2. Install a new set ring (A) onto the set ring groove (B) of the intermediate shaft (C).

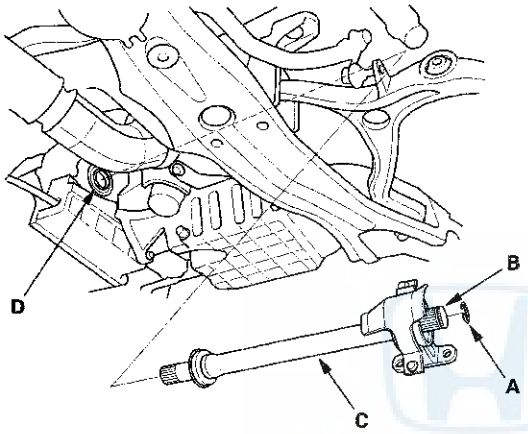

3. Insert the intermediate shaft into the differential correctly.

   NOTE: Insert the intermediate shaft carefully to prevent damaging the oil seal (D).

4. Install the flange bolt (A) and two dowel bolts (B).

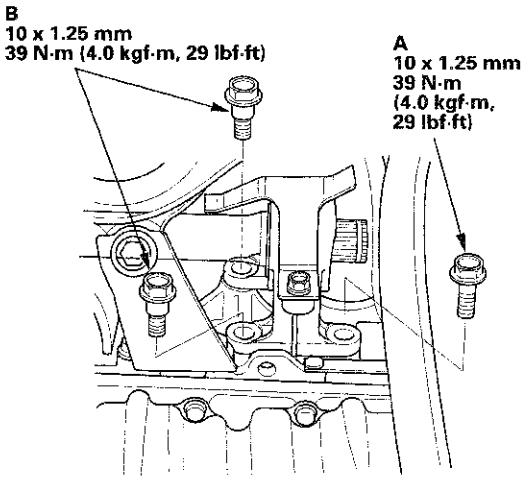

5. Install the right driveshaft (see page 16-20).

6. Refill the transmission with the recommended transmission fluid:

   - Manual transmission (see page 13-5)
   - Automatic transmission (see page 14-231)

7. Check the wheel alignment, and adjust it if necessary (see page 18-5).

8. Test-drive the vehicle.

HONDA

NOTES

HONDA

NOTES

NOTES

HONDA

" Portions of materials contained herein have been reprinted under license from America Honda Motor Co., Inc. License Agreement AH220 ."

Navigation Tools: Click on the "Table of Contents" below, or use the Bookmarks to the left.

INTRODUCTION

How to Use This Manual

This manual is divided into multiple sections. The first page of each section is marked with a black tab that lines up with its corresponding thumb index tab on this page and the back cover. You can quickly find the first page of each section without looking through a full table of contents. The symbols printed at the top corner of each page can also be used as a quick reference system.

Each section includes:

1. A table of contents, or an exploded view index showing:
   - Parts disassembly sequence.
   - Bolt torques and thread sizes.
   - Page references to descriptions in text.
2. Disassembly/assembly procedures and tools.
3. Inspection.
4. Testing/troubleshooting.
5. Repair.
6. Adjustments.

Safety Messages

Your safety, and the safety of others, is very important. To help you make informed decisions, we have provided safety messages, and other safety information throughout this manual. Of course, it is not practical or possible to warn you about all the hazards associated with servicing this vehicle. You must use your own good judgment.

You will find important safety information in a variety of forms including:

- **Safety Labels** — on the vehicle.
- **Safety Messages** — preceded by a safety alert symbol ⚠ and one of three signal words, DANGER, WARNING, or CAUTION. These signal words mean:

⚠ DANGER	You WILL be KILLED or SERIOUSLY HURT if you don't follow instructions.
⚠ WARNING	You CAN be KILLED or SERIOUSLY HURT if you don't follow instructions.
⚠ CAUTION	You CAN be HURT if you don't follow instructions.

- **Instructions** — how to service this vehicle correctly and safely.

All information contained in this manual is based on the latest product information available at the time of printing. We reserve the right to make changes at anytime without notice. No part of this publication may be reproduced, or stored in a retrieval system, or transmitted, in any form by any means, electronic, mechanical, photocopying, recording, or otherwise, without the prior written permission of the publisher. This includes text, figures, and tables.

As you read this manual, you will find information that is preceded by a NOTICE symbol. The purpose of this message is to help prevent damage to your vehicle, other property, or the environment.

First Edition 11/2008
All Rights Reserved
Specifications apply to USA and Canada

HONDA MOTOR CO., LTD.
Service Publication Office

As sections with * include SRS components; special precautions are required when servicing.

marked sections are not included in this manual, see Volume 1.

General Information
Specifications
Maintenance
*Engine Electrical
Engine Mechanical
Engine Cooling
Fuel and Emissions
*Transaxle
*Steering
Suspension (Including TPMS)
Brakes (Including VSA)
*Body
*Heating, Ventilation, and Air Conditioning
*Body Electrical
*Audio, Navigation, and Telematics
*Restraints

2008-09 Accord

SUPPLEMENTAL RESTRAINT SYSTEM (SRS) (If steering maintenance is required)

The Accord SRS includes a driver's airbag in the steering wheel hub, a passenger's airbag in the dashboard above the glove box, seat belt tensioners in the front seat belt retractors, side curtain airbags in the sides of the roof, and side airbags in the front seat-backs. Information necessary to safely service the SRS is included in this Service Manual. Items marked with an asterisk (*) on the contents page include or are located near SRS components. Servicing, disassembling, or replacing these items requires special precautions and tools, and should be done by an authorized Honda dealer.

- To avoid rendering the SRS inoperative, which could lead to personal injury or death in the event of a severe frontal or side collision, all SRS service work should be done by an authorized Honda dealer.
- Improper service procedures, including incorrect removal and installation of the SRS, could lead to personal injury caused by unintentional deployment of the airbags, side airbags, and/or side curtain airbags.
- Do not bump or impact the SRS unit, front impact sensors, side impact sensors, or rear safing sensor when the ignition switch is in ON (II), or for at least 3 minutes after the ignition switch is turned to LOCK (0); otherwise, the system may fail in a collision, or the airbags may deploy.
- SRS electrical connectors are identified by yellow color coding. Related components are located in the steering column, front console, dashboard, dashboard lower panel, in the dashboard above the glove box, in the front seats, in the roof side, and around the floor. Do not use electrical test equipment on these circuits.

Navigation Tools: Click on the "Table of Contents" below, or use the Bookmarks to the left.

Steering

Power Steering

Special Tools 17-2
Component Location Index 17-3
Symptom Troubleshooting Index 17-4
Symptom Troubleshooting 17-7
Steering Wheel Rotational Play Check 17-9
Power Assist Check 17-9
Steering Linkage and Gearbox Inspection 17-10
Pump Pressure Test with T/N 07406-0010001 17-11
Pump Pressure Test with T/N 07406-001000A or T/N 07406-001A101 17-12
Fluid Leakage Inspection 17-13
Fluid Replacement 17-14
Power Steering Hose, Line, and Pressure Switch Replacement 17-15
Pump Replacement 17-16
Pump Overhaul 17-17
* Steering Wheel Removal 17-24
Steering Wheel Disassembly/Reassembly 17-25
* Steering Wheel Installation 17-27
* Steering Column Removal and Installation 17-28
Steering Column Inspection 17-32
Steering Lock Replacement 17-34
Rack Guide Adjustment 17-35
Steering Gearbox Removal 17-36
Steering Gearbox Overhaul 17-43
Steering Gearbox Installation 17-58
Tie-rod Ball Joint Boot Replacement 17-66
Gearbox Mount Cushion Replacement 17-67

Special Tools

Ref. No.	Tool Number	Description	Qty
①	07HAG-SF1020A	Piston Seal Ring Sizing Tool	1
②	07JAD-PL9A100	Oil seal Driver 65 mm	1
③	07MAA-SL00100	Locknut Wrench, 40 mm	1
④	07MAC-SL0A202	Ball Joint Remover, 28 mm	1
⑤	07NAG-SR3090A	Valve Seal Ring Sizing Tool	1
⑥	07YAG-S2X0100	Sleeve Seal Ring Guide	1
⑦	07ZAG-S5A0100	Sleeve Seal Ring Sizing Tool, 36 mm	1
⑧	07RAK-S040111	P/S Joint Adapter (Pump)	1
⑨	07RAK-S040122	P/S Joint Adapter (Hose)	1
⑩	07TAF-SZ50100	Cylinder End Seal Remover Attachment	1
⑪	07XAG-S0KA200	Piston Seal Ring Guide	1
⑫	070AG-SJAA10S	Subframe Alignment Pin	1
⑬	07406-0010001	P/S Pressure Gauge	1
⑭	07406-001000A or 07406-001A101	P/S Pressure Gauge	1
⑮	07746-0010100	Attachment, 32 x 35 mm	1
⑯	07746-0030300	Attachment, 30 mm I.D.	1
⑰	07946-1870100	Attachment, 28 x 30 mm	1
⑱	07749-0010000	Driver Handle, 15 x 135 L	1
⑲	07965-SA50500	Front Hub Dis/Assembly Tool	1

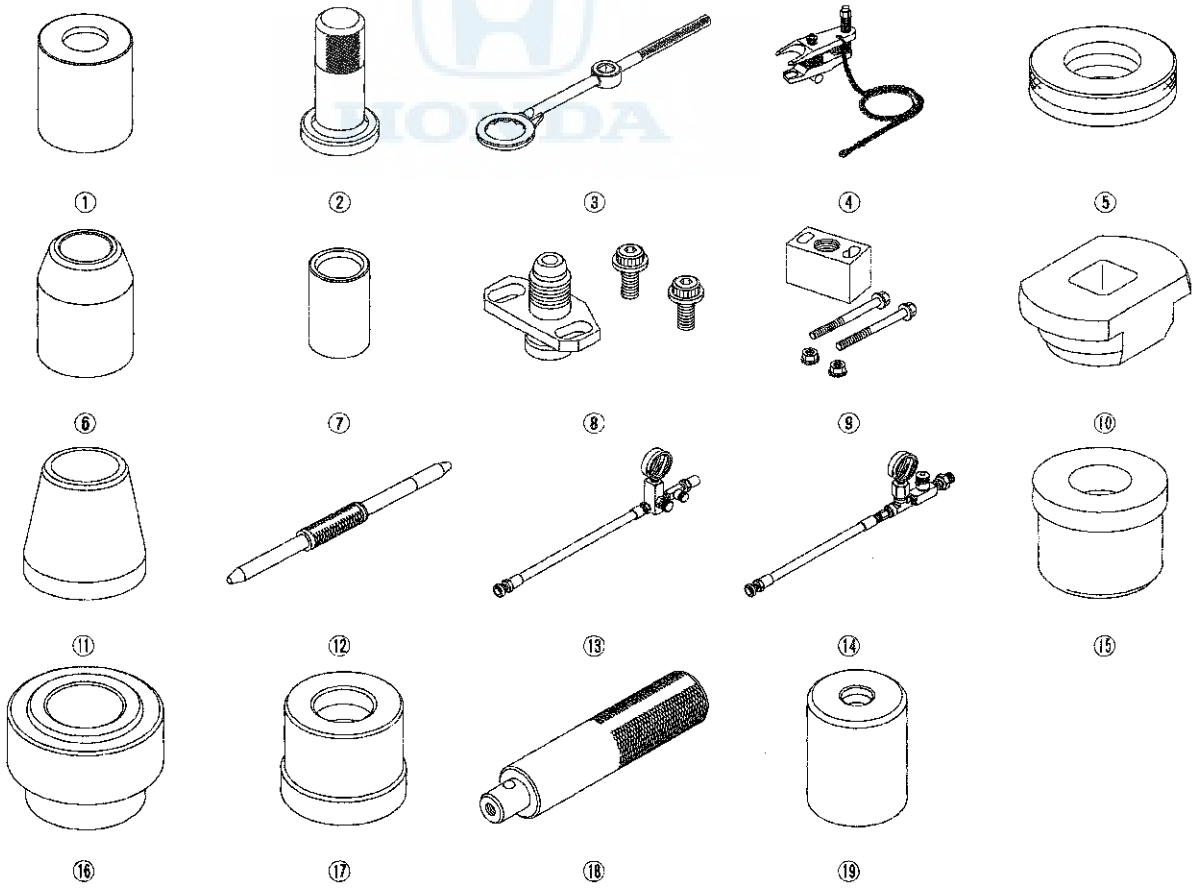

Component Location Index

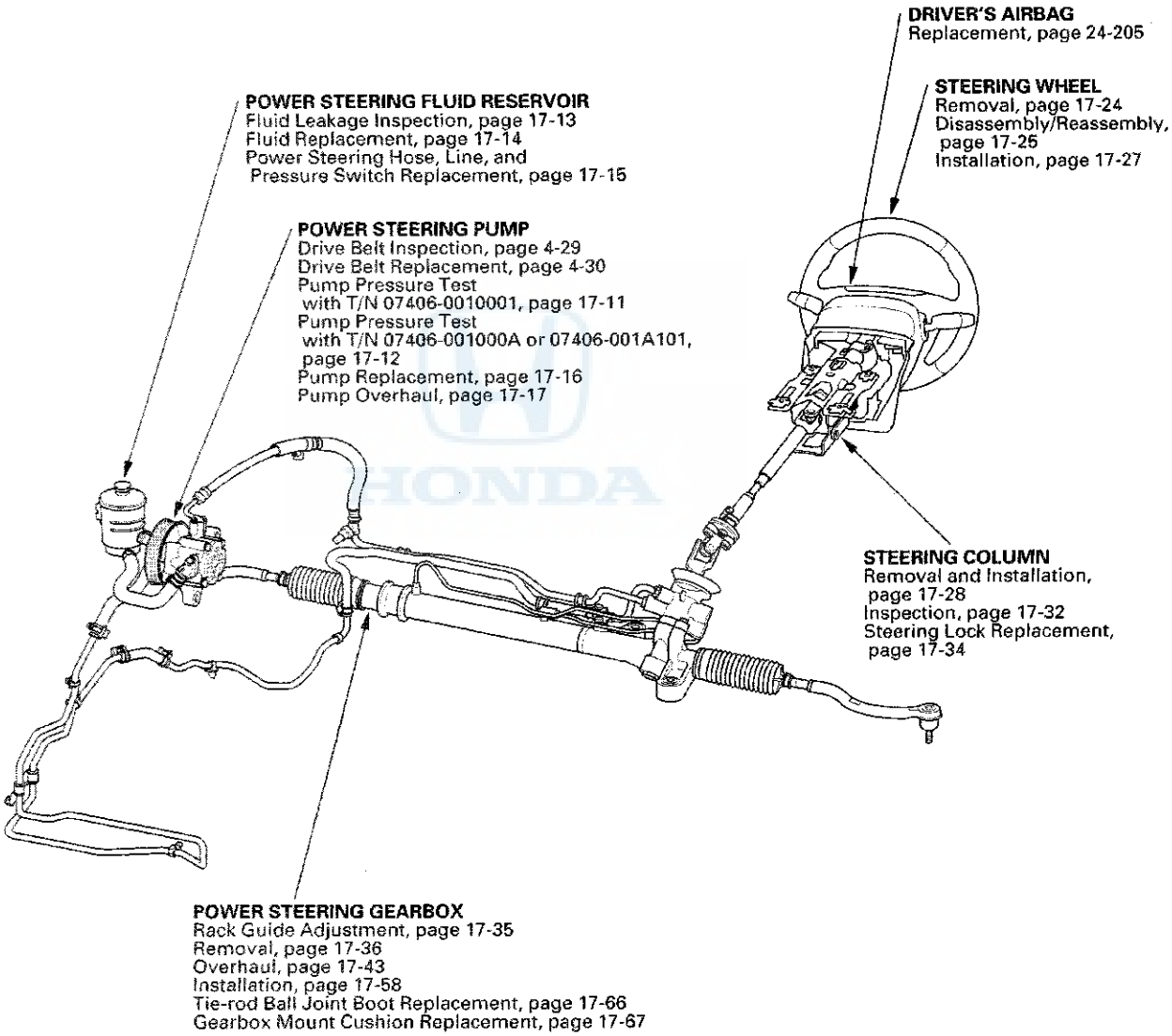

Symptom Troubleshooting Index

Find the symptom in the chart below, and do the related procedures in the order listed until you find the cause.

Symptom	Procedure(s)	Also check for
Hard steering	Troubleshoot the system (see page 17-7).	• Modified suspension • Damaged suspension • Incorrect tire sizes, tire varieties, and air pressure
Assist (excessively light steering at high speed)	Check the rack guide adjustment (see page 17-35).	Front wheel alignment (see page 18-5)
Shock or vibration when the steering wheel is turned to full lock	1. Check the drive belt for slippage (see page 4-30). 2. Check the power steering pump fluid pressure with T/N 07406-0010001 (see page 17-11), T/N 07406-001000A or T/N 07406-001A101 (see page 17-12). 3. Check the rack guide adjustment (see page 17-35). 4. Overhaul the steering gearbox (see page 17-43).	
Steering wheel will not return smoothly	1. Check cylinder lines for deformation (see page 17-15). 2. Check the ball joints for binding. 3. Check wheel alignment (see page 18-5). 4. Overhaul the steering gearbox (see page 17-43).	Damaged suspension
Uneven or rough steering	1. Check for low fluid level in the power steering reservoir due to possible leaks in system (see page 17-14). 2. Check the drive belt (see page 4-30). 3. Check for low or erratic engine idle speed (see page 11-316). 4. Check for air in the power steering system due to air entering the inlet side of the pump. 5. Check the rack guide adjustment (see page 17-35). 6. Overhaul the steering gearbox (see page 17-43).	
Steering wheel kicks back during wide turns	1. Check for low fluid level in the power steering reservoir due to possible leaks in the system (see page 17-14). 2. Check the drive belt (see page 4-30). 3. Check the power steering pump fluid pressure with T/N 07406-0010001 (see page 17-11), T/N 07406-001000A or T/N 07406-001A101 (see page 17-12).	

Symptom	Procedure(s)	Also check for
Humming noise from the power steering system	1. Check when the noise occurs: • If the noise is heard during the first 2—3 minutes after starting the engine in cold weather, this is normal. • If the noise is heard when the wheel is turned with the vehicle stopped, this is normal due to the fluid pulsation. 2. Check for air bubbles in the power steering fluid, leak on the inlet side of the pump. 3. Check for particle contamination of fluid and a restricted filter in the reservoir. 4. Check for the high-pressure hose touching the subframe or body. 5. Check for automatic transmission torque converter noise.	• Pump pressure • Fluid contamination – Restriction in the high-pressure line – Restriction in the low-pressure line
Power steering rack rattle or chattering	1. Check for loose steering components (tie-rod and ball joints). Tighten or replace as necessary. 2. Check the steering column shaft for wobbling. If the steering column wobbles, replace the steering column assembly (see page 17-28). 3. Check the power steering pump pulley on the shaft comp, for damage and deterioration, replace the shaft comp, if necessary (see page 17-17). 4. Check the rack guide adjustment (see page 17-35).	
Hissing from the power steering system/foaming fluid	• Check the fluid level. If low, fill the reservoir to the proper level and check for leaks (see page 17-14). • Check the reservoir for leaks. • Check for crushed inlet hose or loose hose clamp allowing air into the suction side of the system (see page 17-15). • Check the power steering pump shaft oil seal for leaks.	• Air in the P/S fluid • Fluid contamination
Noise from the power steering pump	• Compare the pump noise at normal operating temperature to another like vehicle (pump noise during the first 2—3 minutes after starting the engine in cold weather is normal). • Remove and inspect the pump for wear and damage (see page 17-16).	• P/S pump pressure • Air in the P/S fluid
Squeaking from the power steering pump	Check the drive belt (see page 4-30).	
Fluid leaks from the steering gearbox	• Fluid leaks from the top of the valve body unit. Overhaul the valve body unit (see step 23 on page 17-48). • Fluid leaks from the driver's side boot. Replace the valve oil seal on the pinion shaft. Replace the cylinder end seal on the gearbox side (see page 17-43). • Fluid leaks from the passenger's side boot. Replace the cylinder end seal on the cylinder side (see page 17-43). • Fluid leaks from pinion shaft near the lower steering joint bolt. Overhaul the valve body unit (see step 23 on page 17-48). • Fluid leaks from the steering damping valve covers on the valve body unit. Replace the valve housing.	Fluid contamination

(cont'd)

Symptom Troubleshooting Index (cont'd)

Symptom	Procedure(s)	Also check for
Fluid leaks from the power steering line	• Fluid leaks from the cylinder line connections (flare nuts). Tighten the connection and retest (see page 17-15). • Fluid leaks from a damaged cylinder line(s). Replace the cylinder line(s) (see page 17-15). • Fluid leaks from the pump outlet hose or return line fitting on the valve body unit (flare nuts). Tighten the fitting and retest. If it still leaks, replace the hose, the line (see page 17-15), or valve body unit as necessary.	Fluid contamination
Fluid leaks from the power steering pump	• Fluid leaks from the pump seal. Replace the pump seal (see page 17-17). • Fluid leaks from the power steering pump housing. Replace the leaking O-rings or seals (see page 17-17), and if necessary replace the power steering pump (see page 17-16).	Fluid contamination
Fluid leaks from the power steering reservoir	• Fluid leaks from around the reservoir cap because fluid level is too high. Drain the reservoir to the proper level (see page 17-14). If the fluid is aerated check for an air leak on the inlet side of pump. • Fluid leaks from reservoir. Check the reservoir for cracks and replace as necessary.	Fluid contamination
Fluid leaks from the power steering pump outlet hose (high-pressure)	• Check the fitting for loose bolts. If the bolts are tight, replace the fitting O-ring (see page 17-15). • Fluid leaks at the swagged joint. Replace the pump outlet hose (see page 17-15).	Fluid contamination
Fluid leaks from the power steering pump inlet hose (low-pressure)	Check the hose for damage, deterioration, or improper assembly (see page 17-15). Replace or repair as necessary.	Fluid contamination

Symptom Troubleshooting

Hard Steering

NOTE:
- Compare to a known-good vehicle that is the same trim level.
- Check for suspension damage.
- Check the steering alignment.
- Check the tire condition and pressure.

1. Check the power assist (see page 17-9).

   Is the initial turning load more than 29 N (3.0 kgf, 6.6 lbf)?

   YES—Go to step 2.

   NO—Power assist is OK at this time. Compare to a known-good vehicle.■

2. Connect the P/S joint adapter (pump), P/S joint adapter (hose), and P/S pressure gauge T/N 07406-0010001 (see page 17-11), T/N 07406-001000A or T/N 07406-001A101 (see page 17-12) to the pump.

3. Measure steady-state fluid pressure from the pump at idle.

   Is the pressure 1,470 kPa (15 kgf/cm², 213 psi) or less?

   YES—Go to step 4.

   NO—Go to step 8.

4. Measure the pump relief pressure at idle.

   Is the pressure 8,140—8,830 kPa (83—90 kgf/cm², 1,180—1,280 psi) or more?

   YES—Go to step 5.

   NO—Go to step 9.

5. Using a spring scale, measure the power assist in both directions, to the left and to the right.

   Are the two measurements within 5.0 N (0.51 kgf, 1.12 lbf) of each other?

   YES—Go to step 6.

   NO—Go to step 11.

6. Measure the fluid pressure with both pressure gauge valves open (if so equipped), while turning the steering wheel fully to the left and fully to the right.

   Is the pressure 8,140—8,830 kPa (83—90 kgf/cm², 1,180—1,280 psi) or more in both directions?

   YES—Go to step 7.

   NO—Faulty steering gearbox. Overhaul the steering gearbox (see page 17-43).■

(cont'd)

Symptom Troubleshooting (cont'd)

7. Adjust the rack guide (see page 17-35), and retest.

   Is the steering OK?

   YES—Repair is completed. ■

   NO—Faulty steering gearbox. Overhaul the steering gearbox (see page 17-43). ■

8. Check the outlet and return hoses and lines between the pump and the steering gearbox for clogging and deformation.

   Are the lines clogged or deformed?

   YES—Replace the lines. ■

   NO—Faulty valve body unit. Overhaul the steering gearbox (see page 17-43). ■

9. Disassemble the pump (see page 17-17).

10. Check the flow control valve for smooth movement and leaks (see step 12 on page 17-18).

    Is the flow control valve OK?

    YES—Faulty pump assembly. Replace the pump assembly (see page 17-16). ■

    NO—Faulty flow control valve. Replace the flow control valve (see page 17-17). ■

11. Check the cylinder lines for deformation (see page 17-15).

    Are any of the line(s) deformed?

    YES—Replace the deformed line(s). ■

    NO—Go to step 12.

12. Check for a bent rack shaft or misadjusted rack guide (too tight).

    Is the rack shaft bent or the rack guide adjusted too tight?

    YES—Replace the rack shaft, or readjust the rack guide preload. ■

    NO—Faulty valve body unit. Replace the valve body unit. ■

HONDA

Steering Wheel Rotational Play Check

1. Turn the front wheels to the straight ahead position.

2. Measure how far you can turn the steering wheel left and right without moving the front wheels.

   - If the play is within the limit, the steering gearbox and the steering linkages are OK.
   - If the play exceeds the limit, adjust the rack guide (see page 17-35). If the play is still excessive after rack guide adjustment, inspect the steering linkage and steering gearbox (see page 17-10).

Rotational play: 0—10 mm (0—0.39 in.)

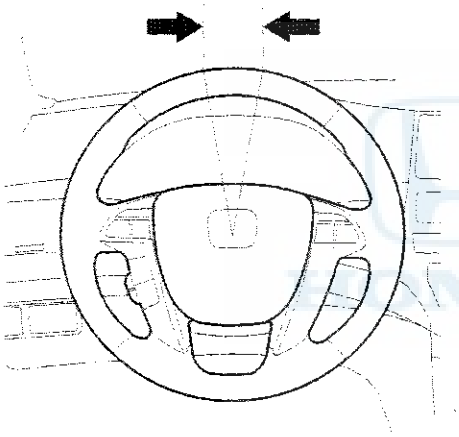

Power Assist Check

NOTE: This test should be done with original equipment tires and wheels at the correct tire pressure.

1. Check the power steering fluid level (see page 17-14).

2. Start the engine, let it idle, and turn the steering wheel from lock-to-lock several times to warm up the fluid.

3. Attach a commercially available spring scale to the steering wheel. With the engine idling and the vehicle on a clean, dry floor, pull the scale as shown and read it as soon as the tires begin to turn.

   - If the scale reads no more than the specification, the steering gearbox and pump are OK.
   - If the scale reads more than the specification, troubleshoot the steering system (see page 17-7).

Initial turning load: 29 N (3.0 kgf, 6.6 lbf)

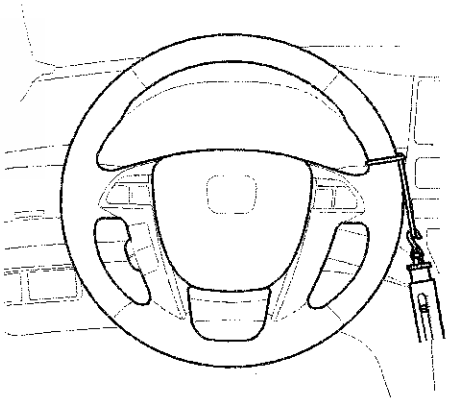

Steering Linkage and Gearbox Inspection

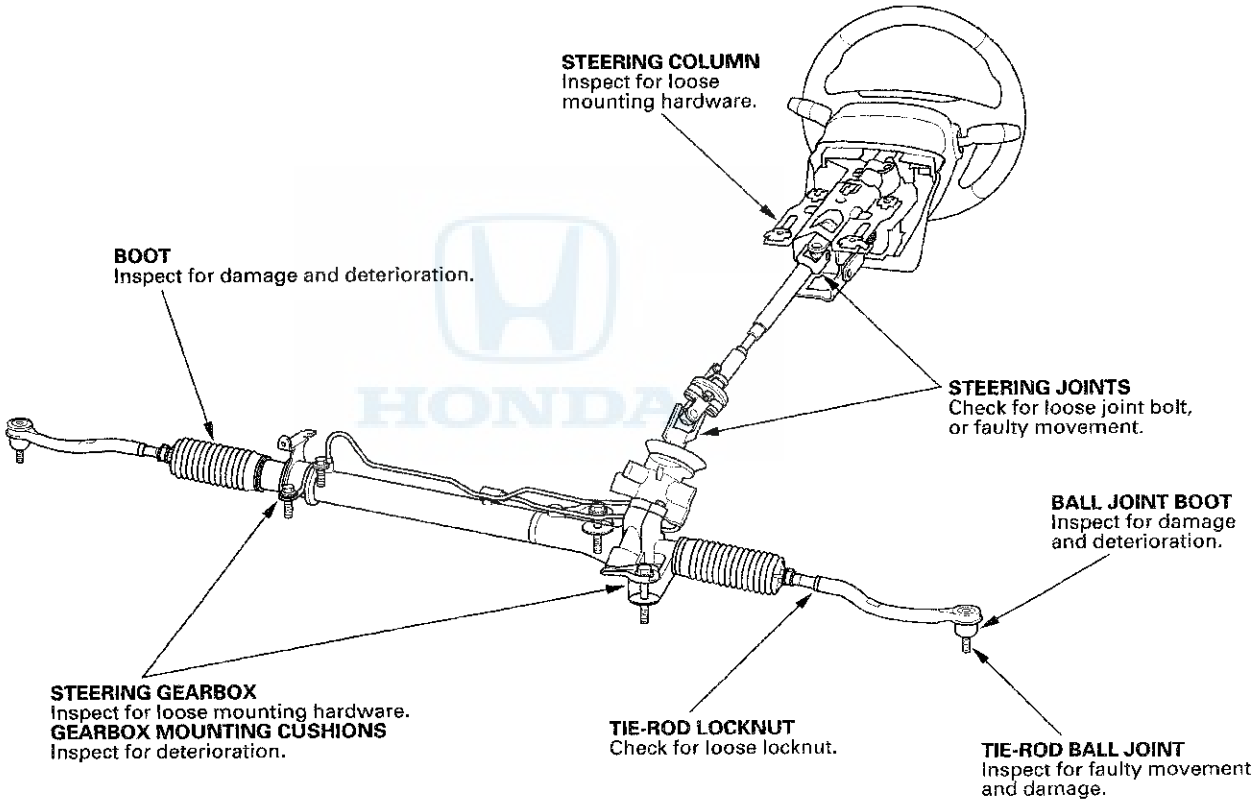

Pump Pressure Test with T/N 07406-0010001

Special Tools Required
- P/S joint adapter (pump) 07RAK-S040111
- P/S joint adapter (hose) 07RAK-S040122
- P/S pressure gauge 07406-0010001

Check the fluid pressure as follows to determine whether the trouble is in the pump or steering gearbox.

1. Check the power steering fluid level (see page 17-14).

2. Disconnect the pump outlet hose (A) from the pump outlet with care so as not to spill the power steering fluid on the frame and other parts, then install the P/S joint adapter (pump) on the pump outlet (B).

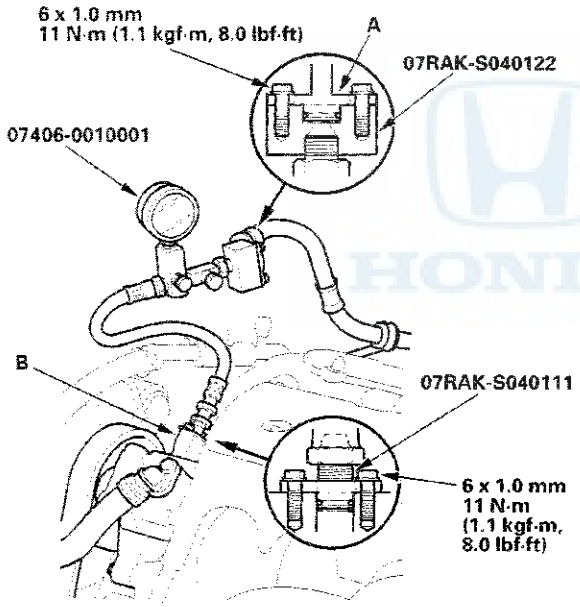

3. Connect the P/S joint adapter (hose) to the P/S pressure gauge, then connect the pump outlet hose to the P/S joint adapter (hose).

4. Install the P/S pressure gauge to the P/S joint adapter (pump).

5. Fully open the shut-off valve (A).

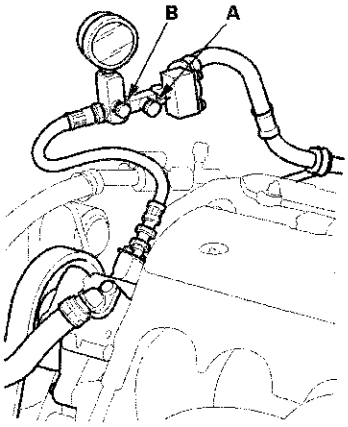

6. Fully open the pressure control valve (B).

7. Start the engine, and let it idle.

8. Turn the steering wheel from lock-to-lock several times to warm the fluid to operating temperature at 158 °F (70 °C).

9. Measure steady-state fluid pressure while the engine is idling. If the pump is in good condition, the gauge should read no more than 1,470 kPa (15 kgf/cm², 213 psi).
   If the reading is high, check for:

   - Clogged or deformed inlet or return line between the pump and the steering gearbox.
   - Clogged valve body unit.

10. Close the shut-off valve, then close the pressure control valve gradually until the pressure gauge needle is stable. Read the pressure.

    NOTICE
    Do not keep the shut-off valve closed more than 5 seconds or the pump could be damaged by over-heating.

11. Immediately open the shut-off valve fully.
    If the pump is in good condition, the gauge should read at least 8,140—8,830 kPa (83—90 kgf/cm², 1,180—1,280 psi). A low reading means the pump output is too low for full assist. Repair or replace the pump.

Pump Pressure Test with T/N 07406-001000A or T/N 07406-001A101

Special Tools Required
- P/S joint adapter (pump) 07RAK-S040111
- P/S joint adapter (hose) 07RAK-S040122
- P/S pressure gauge 07406-001000A or 07406-001A101

Check the fluid pressure as follows to determine whether the trouble is in the pump or steering gearbox.

1. Check the power steering fluid level (see page 17-14).

2. Disconnect the pump outlet hose (A) from the pump outlet with care so as not to spill the power steering fluid on the frame and other parts, then install the P/S joint adapter (pump) on the pump outlet (B).

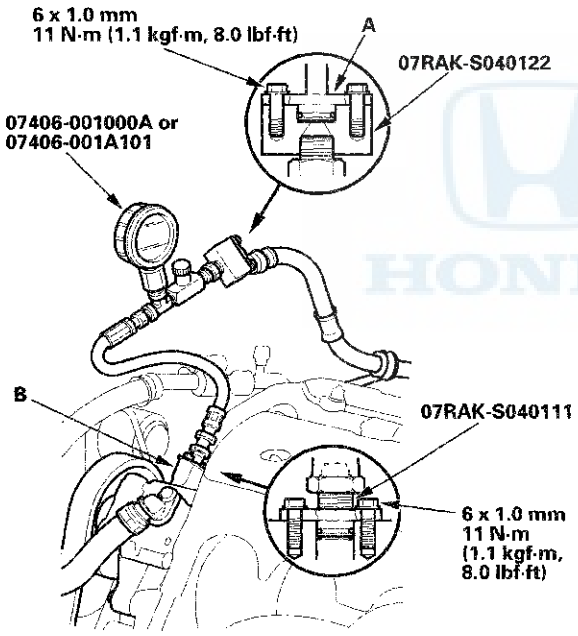

3. Connect the P/S joint adapter (hose) to the P/S pressure gauge, then connect the pump outlet hose to the P/S joint adapter (hose).

4. Install the P/S pressure gauge to the P/S joint adapter (pump).

5. Fully open the shut-off valve (A).

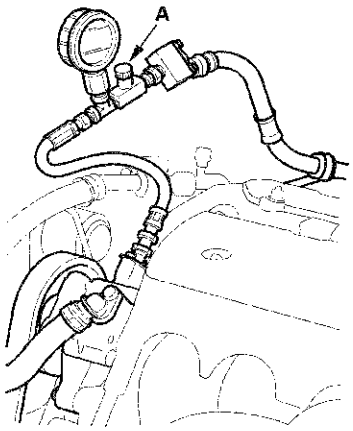

6. Start the engine, and let it idle.

7. Turn the steering wheel from lock-to-lock several times to warm the fluid to operating temperature at 158 °F (70 °C).

8. Measure steady-state fluid pressure while the engine is idling. If the pump is in good condition, the gauge should read no more than 1,470 kPa (15 kgf/cm², 213 psi).
   If the reading is high, check for:
   - Clogged or deformed inlet or return line between the pump and the steering gearbox.
   - Clogged valve body unit.

9. Close the shut-off valve gradually, and read the pressure.

   NOTICE
   Do not keep the shut-off valve closed more than 5 seconds or the pump could be damaged by over-heating.

10. Immediately open the shut-off valve fully.
    If the pump is in good condition, the gauge should read at least 8,140—8,830 kPa (83—90 kgf/cm², 1,180—1,280 psi). A low reading means the pump output is too low for full assist. Repair or replace the pump.

Fluid Leakage Inspection

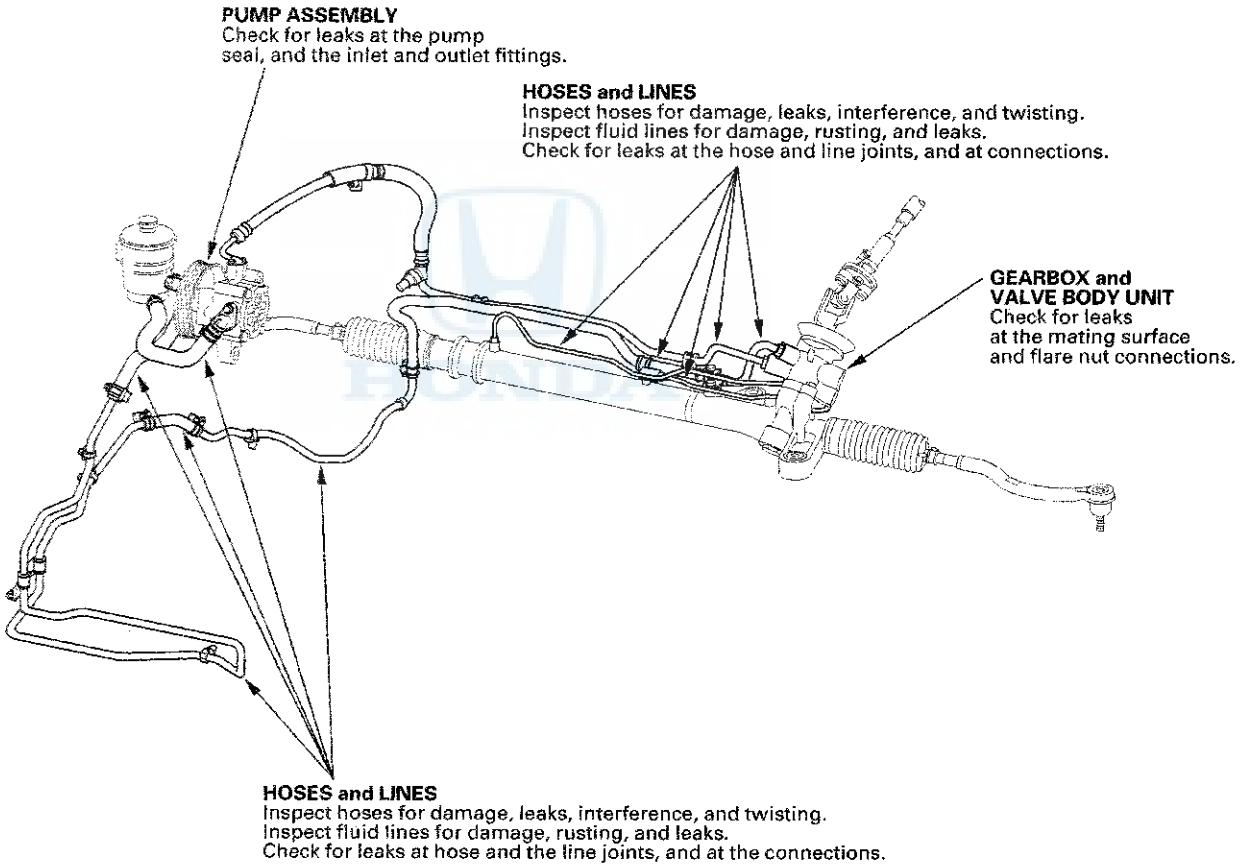

Fluid Replacement

Check the reservoir (A) at regular intervals, and add the recommended fluid as necessary. Always use Honda Power Steering Fluid. Using any other type of power steering fluid or automatic transmission fluid can cause increased wear, fluid leaks, and poor steering in cold weather.

NOTE: If the fluid is contaminated, the screen in the reservoir may be partially blocked. Inspect the reservoir screen for any debris. If the reservoir screen is clogged, replace the reservoir.

System capacity:
1.05 L (1.11 US. qt) at disassembly
Reservoir capacity:
0.32 L (0.34 US. qt)

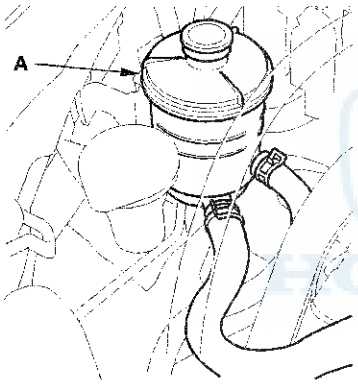

1. Remove the reservoir from its holder. Raise the reservoir, then disconnect the return hose (A) to drain the reservoir. Take care not to spill the fluid on the vehicle. Wipe off any spilled fluid at once.

   NOTE: Inspect the reservoir screen for any debris. If the reservoir screen is clogged, replace the reservoir.

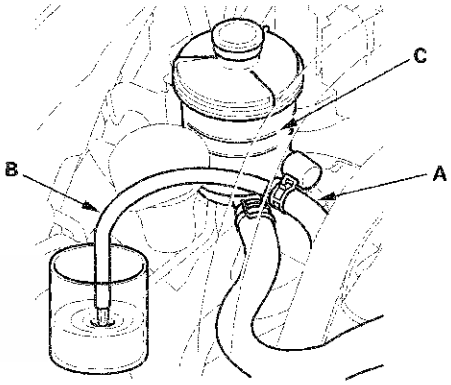

2. Connect a hose (B) of suitable diameter to the disconnected return hose, and put the hose end in a suitable container.

3. Start the engine, let it run at idle, and turn the steering wheel from lock-to-lock several times. When fluid stops running out of the hose, shut off the engine. Discard the fluid.

   NOTE: Stop the motor immediately once the fluid stops running out of the hose to prevent pump damage.

4. Reinstall the return hose on the reservoir.

5. Fill the reservoir to the upper level line (C).

6. Start the engine and run it at idle, then turn the steering from lock-to-lock several times to bleed air from the system.

7. Recheck the fluid level and add some if necessary. Do not fill the reservoir beyond the upper level line.

8. If the fluid is contaminated, dark, or discolored, repeat the procedure as necessary until the system is clean.

Power Steering Hose, Line, and Pressure Switch Replacement

Note these items during installation:

- Connect each hose to the corresponding line securely until it contacts the stop on the line. Install the clamp or adjustable clamp at the specified distance from the hose end as shown.
- Check all clamps for deterioration or deformation; replace the clamps with new ones if necessary.
- Add the recommended power steering fluid to the specified level on the reservoir and check for leaks.

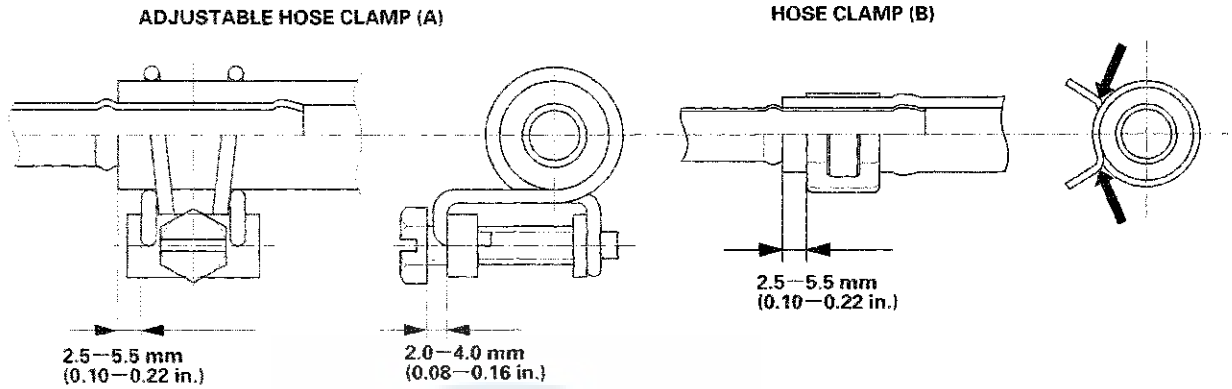

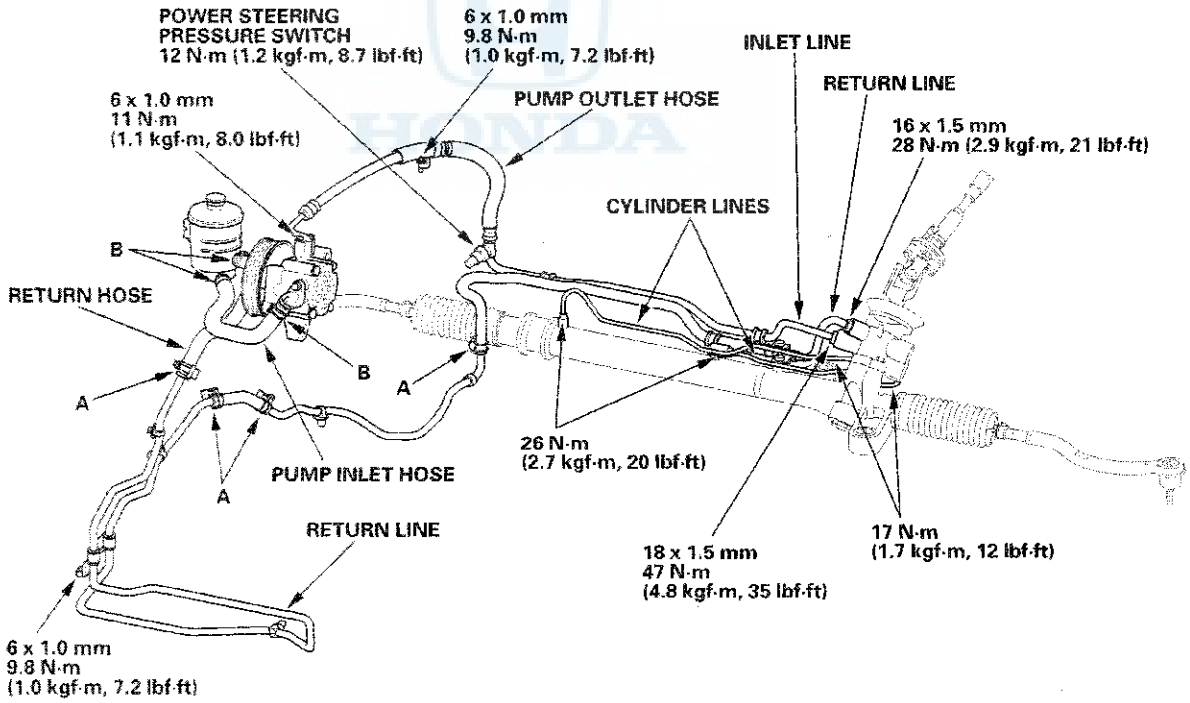

Pump Replacement

1. Place a suitable container under the vehicle to catch any spilled fluid.

2. Drain the power steering fluid from the reservoir (see page 17-14).

3. Remove the drive belt (A) from the pump pulley (see page 4-30).

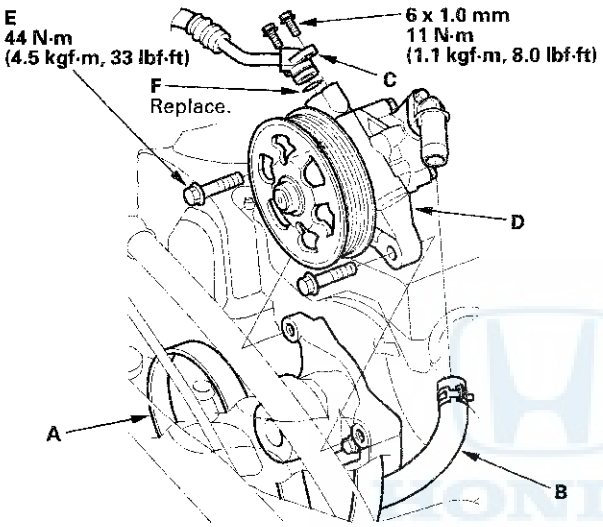

4. Cover the auto-tensioner, alternator, and A/C compressor with several shop towels to protect them from spilled power steering fluid. Disconnect the pump inlet hose (B) and pump outlet hose (C) from the pump (D), and plug them. Take care not to spill the fluid on the body or parts. Wipe off any spilled fluid at once. Do not turn the steering wheel with the pump removed.

5. Remove the pump mounting bolts (E).

6. Cover the opening of the pump with a piece of tape to prevent foreign material from entering the pump.

7. Transfer the pump inlet hose and pump outlet hose from the original pump onto the new pump with a new O-ring (F).

8. Loosely install the pump in the pump bracket with the mounting bolts, then tighten the pump fittings to the specified torque.

9. Tighten the pump mounting bolts to the specified torque.

10. Install the drive belt (A).

    Note these items during drive belt installation:
    - Inspect the belt for wear and cracks. Replace the belt if necessary.
    - Make sure that the belt is properly positioned on the pulleys (B).
    - Do not get power steering fluid or grease on the auto-tensioner, alternator, A/C compressor, and drive belt, or pulley faces. Clean off any fluid or grease before installation.

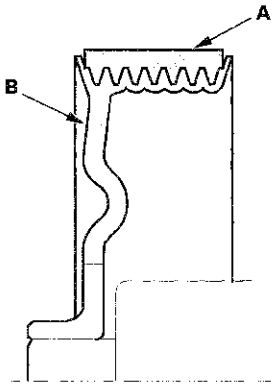

11. Fill the reservoir to the upper level line (see page 17-14).

12. Start the engine, and check for fluid leaks.

Pump Overhaul

Exploded View

Replace the pump as an assembly if any of the parts indicated with an asterisk (*) are worn or damaged.

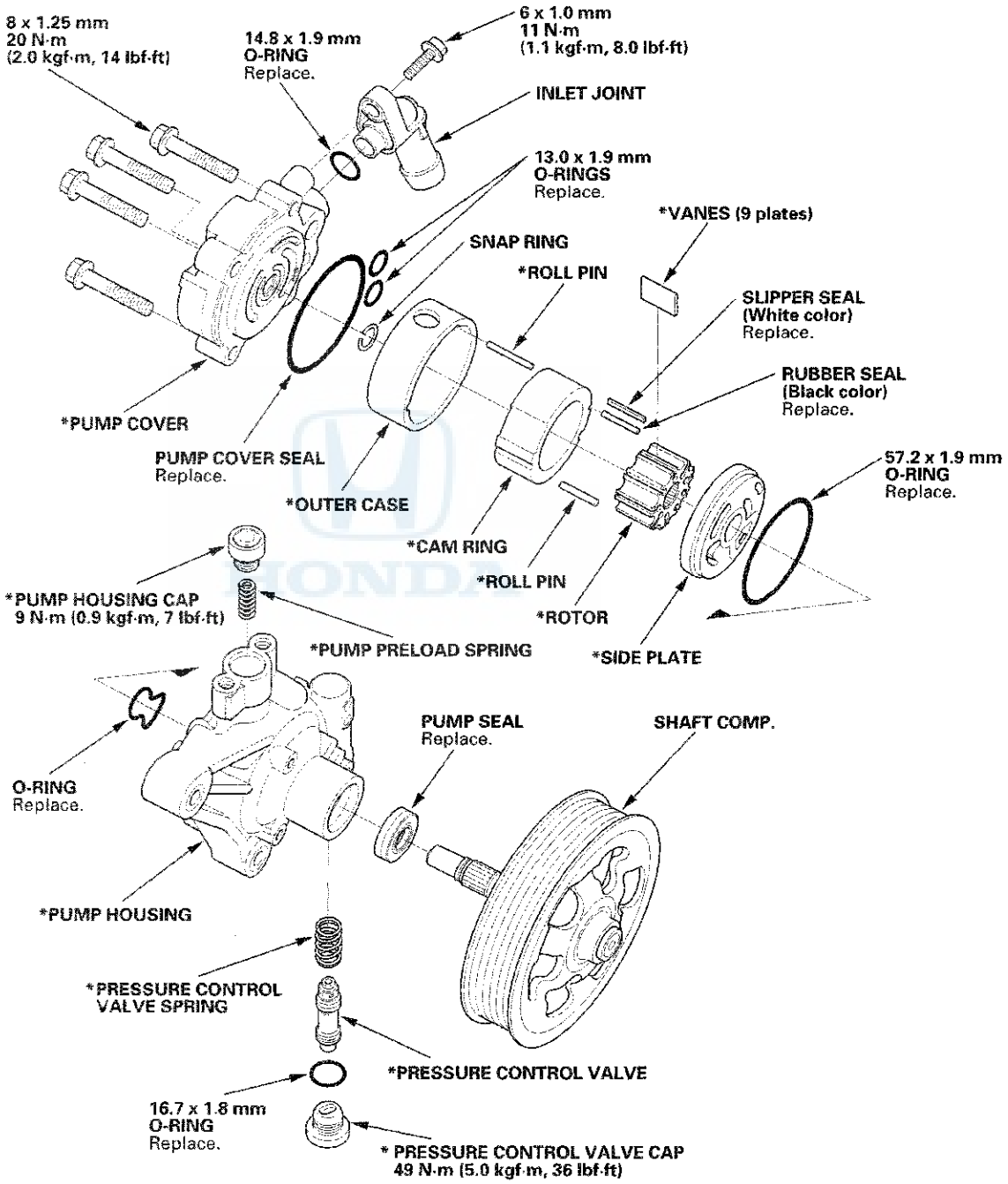

(cont'd)

Pump Overhaul (cont'd)

Special Tools Required
- Attachment, 32 x 35 mm 07746-0010100
- Driver handle, 15 x 135 L 07749-0010000

Disassembly

NOTE: Refer to the Exploded View as needed during the following procedure.

1. Remove the power steering pump (see page 17-16).
2. Drain the remaining fluid from the power steering pump.
3. Remove the inlet joint and O-ring.
4. Remove the pressure control valve cap, O-ring, pressure control valve, and spring.
5. Remove the pump housing cap and pump preload spring.
6. Remove the pump cover, pump cover seal, and O-rings.
7. Remove the snap ring, then remove the rotor, vanes, cam ring, outer case, side plate, and O-rings.
8. Remove the shaft comp. by tapping the shaft end with a soft face hammer.
9. Remove the pump seal from the pump housing.

Inspection

10. Check the pressure control valve for wear, burrs, and other damage to the edges of the grooves in the valve.

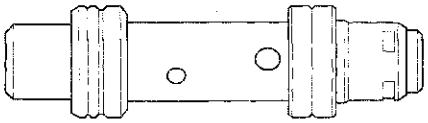

11. Inspect the bore of the pressure control valve on the pump housing for scratches and wear.
12. Slip the pressure control valve back in the pump housing, and check that it moves in and out smoothly. If OK, go to step 13; if not, replace the pump as an assembly. The pressure control valve (A) is not available separately.

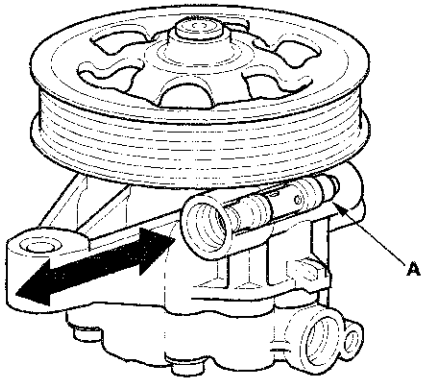

13. Attach a hose (A) to the end of the pressure control valve (B) as shown. Then submerge the pressure control valve in a container of power steering fluid (C), and apply compressed air in the hose.

    - If air bubbles leak through the valve at less than 98 kPa (1.0 kgf/cm^2, 14.2 psi), replace the pump as an assembly. The pressure control valve is not available separately.
    - If the pressure control valve is OK, set it aside for reassembly later.

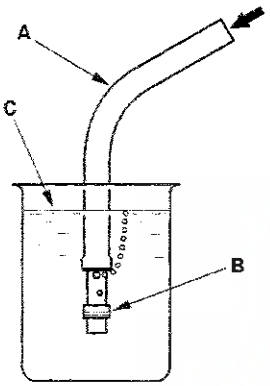

Reassembly

14. Install the new pump seal (A) (with its grooved side facing in) into the pump housing (B) by hand, then drive it in using the driver handle and attachment until the pump seal is flush with the pump housing, and the seal is fully seated in the pump housing.

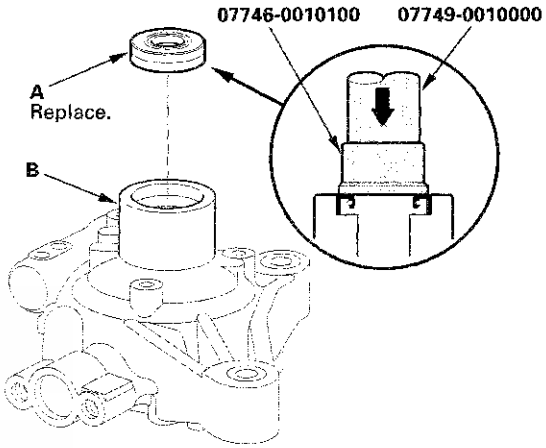

15. Install the shaft comp. into the pump housing.

16. Coat the new O-ring (A) with power steering fluid, and install it into the groove in the pump housing (B).

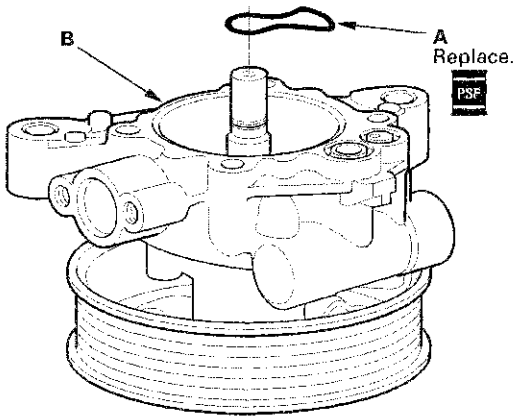

(cont'd)

Pump Overhaul (cont'd)

17. Coat the new 57.2 mm O-ring (A) with power steering fluid, and install it into the groove in the side plate (B).

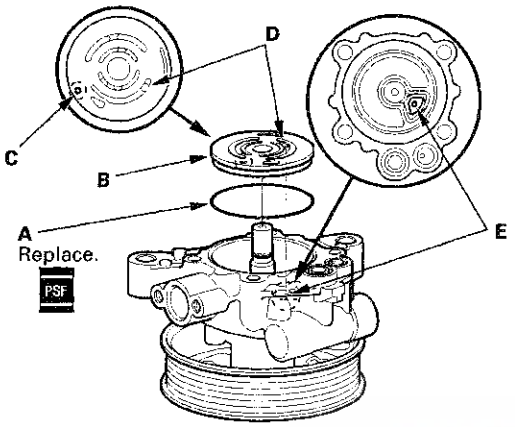

18. Set the side plate with the slot (C) facing up, and align the hole (D) in the side plate and the slot (E) in the pump housing.

19. Install the outer case (A) by aligning the slot (B) inside the pump housing with the roll pin hole (C) on the side plate.

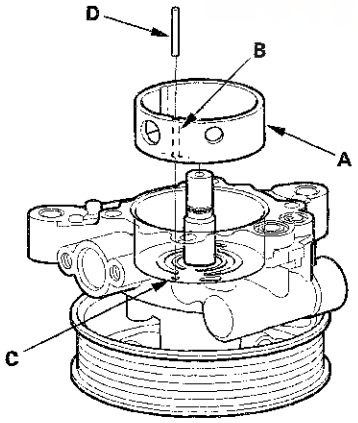

20. Install the roll pin (D) into the set hole.

21. Install the cam ring (A) by aligning the slot (B) outside of the cam ring with the slot (C) in the outer case.

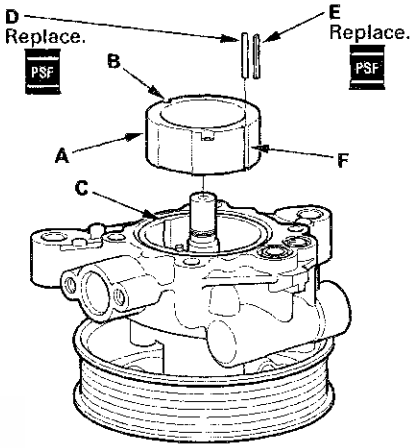

22. Apply power steering fluid to the rubber seal (D) (black) and slipper seal (E) (white), and install them in the slot (F) of the cam ring.

23. Install the roll pin (A) into the slots between the cam ring (B) and outer case (C), then push the roll pin into the set hole.

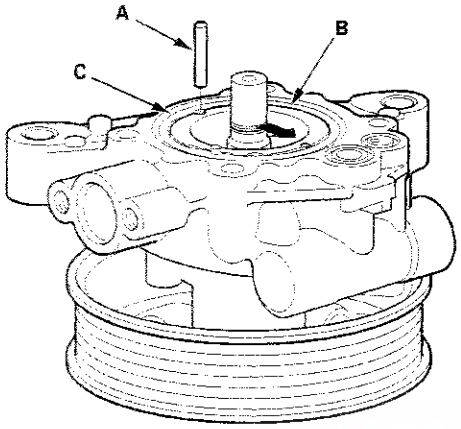

24. Install the rotor (A) in the cam ring (B).

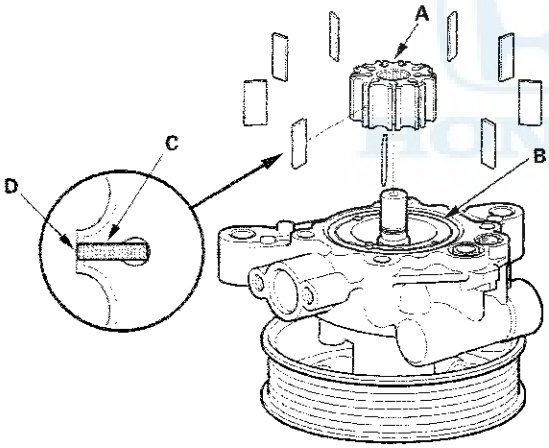

25. Set the 9 vanes (C) into the grooves in the rotor. Make sure that the gold-colored ends (D) of the vanes are in contact with the sliding surface of the cam ring.

26. Install the snap ring (A).

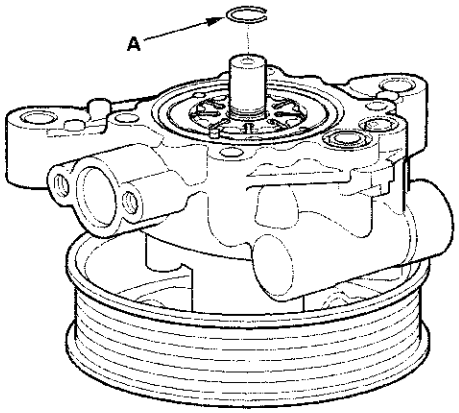

27. Coat the new 13.0 mm O-rings (A) with power steering fluid, and install them into the grooves in the pump housing (B).

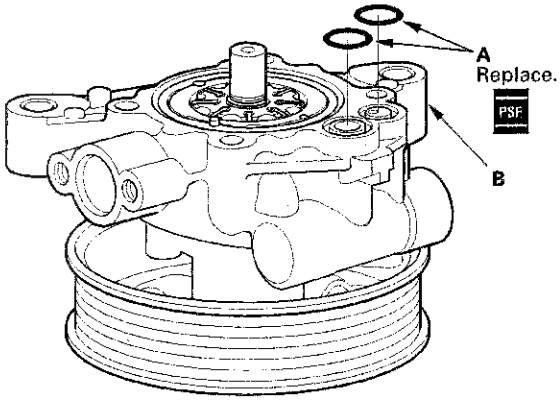

(cont'd)

Pump Overhaul (cont'd)

28. Push in the cam ring (A) from the pump housing cap hole (B) with a flat-tip screwdriver to make sure the cam ring is fully seated against the outer case.

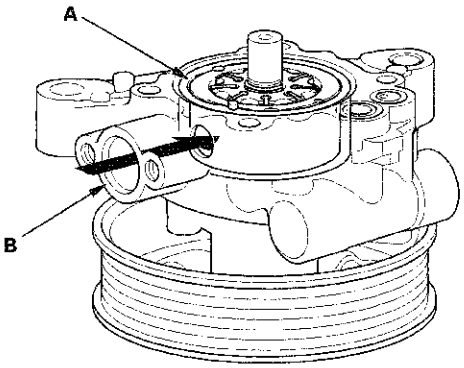

29. Coat the new pump cover seal (A) with power steering fluid, and install it into the groove in the pump cover (B).

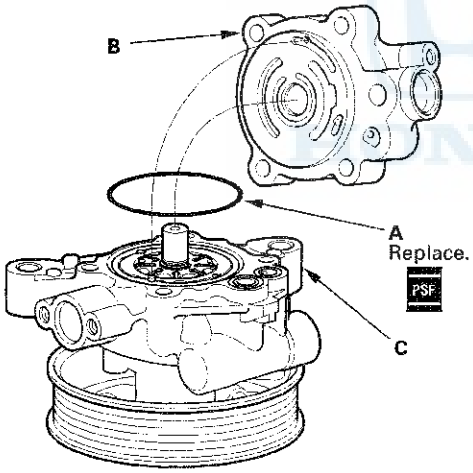

30. Install the pump cover assembly over the pump housing (C).

31. Align the bolt holes in the cover (A) with the threaded holes in the pump housing. Install the flange bolts loosely first, then tighten the flange bolts to the specified torque alternately in two or more steps.

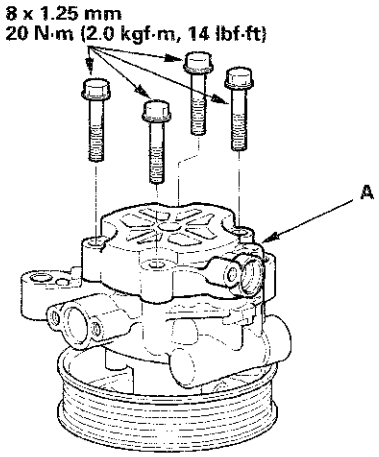

32. Install the pump preload spring (A) in the pump housing (B).

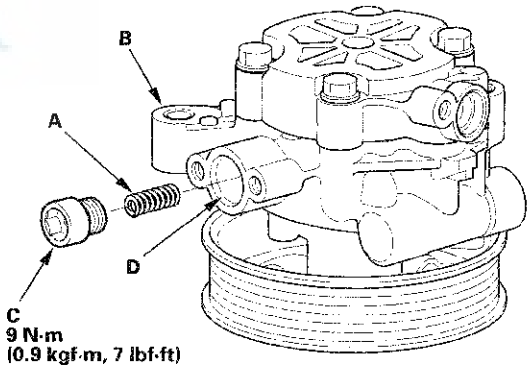

33. Install the pump housing cap (C) on the pump housing, and tighten it to the specified torque.

NOTE: Be careful not to damage the pump outlet hose connecting surface (D) pump housing when installing the housing cap.

34. Install the spring (A) in the pump housing.

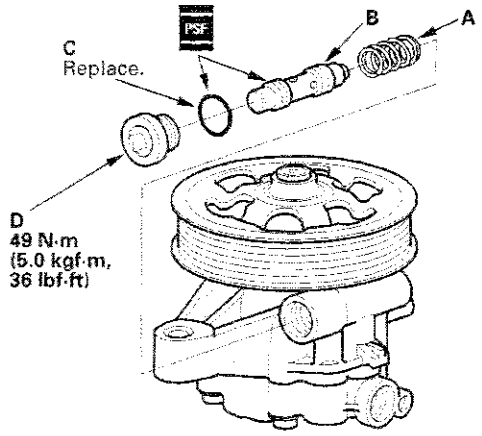

35. Coat the pressure control valve (B) with power steering fluid, and install it in the pump housing.

36. Coat the new 16.7 mm O-ring (C) with power steering fluid, and install it on the pressure control valve cap (D).

37. Install the pressure control valve cap on the pump housing, and tighten it to the specified torque.

38. Coat the new 14.8 mm O-ring (A) with power steering fluid, and install it on the inlet joint (B). Install the inlet joint with a flange bolt (C) on the pump housing, and tighten to the specified torque.

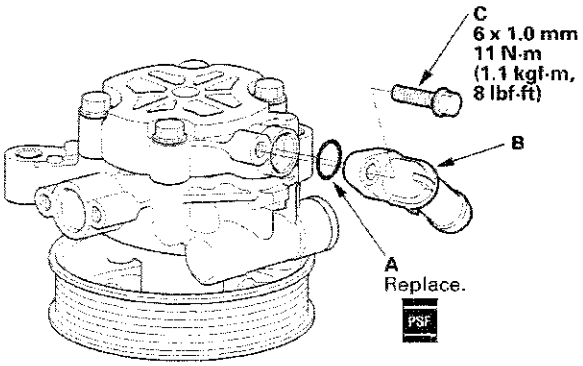

39. Check that the power steering pump turns smoothly by turning the pulley by hand. If it is hard to turn, loosen the four flange bolts on the pump cover, then retighten them in the same manner as in step 31. Retest. If the power steering pump is still hard to turn, replace the power steering pump.

40. Reinstall the power steering pump (see page 17-16).

Steering Wheel Removal

SRS components are located in this area. Review the SRS component locations: 4-door (see page 24-19), 2-door (see page 24-21) and the precautions and procedures (see page 24-23) before doing repairs or service.

1. Do the battery terminal disconnection procedure (see page 22-89).

2. Align the front wheels straight ahead, then remove the driver's airbag from the steering wheel (see page 24-205).

3. Disconnect the cable reel subharness connector (A).

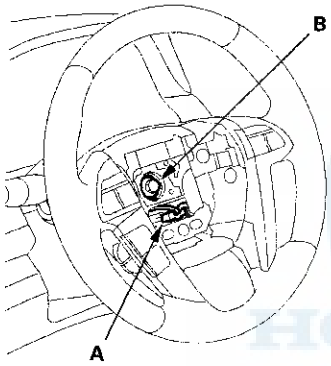

4. Loosen the steering wheel bolt (B).

5. Install a commercially available steering wheel puller (A) on the steering wheel (B). Free the steering wheel from the steering column shaft by turning the pressure bolt (C) of the puller.

   Note these items when removing the steering wheel:
   - Do not tap on the steering wheel or the steering column shaft when removing the steering wheel.
   - If you thread the puller bolts (D) into the wheel hub more than five threads, the bolts will hit the cable reel and damage it. To prevent this, install a pair of jam nuts five threads up on each puller bolt.

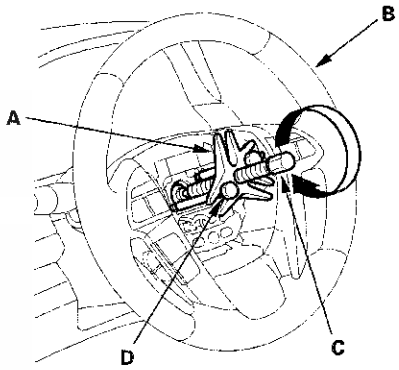

6. Remove the steering wheel puller, then remove the steering wheel bolt and steering wheel from the steering column.

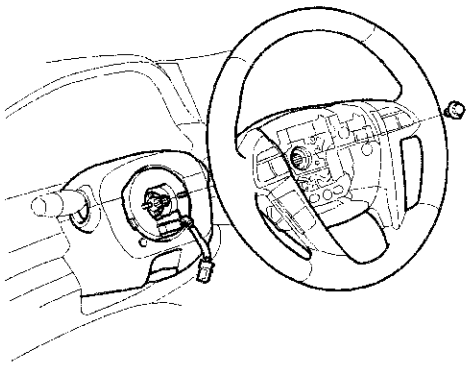

Steering Wheel Disassembly/Reassembly

4-door

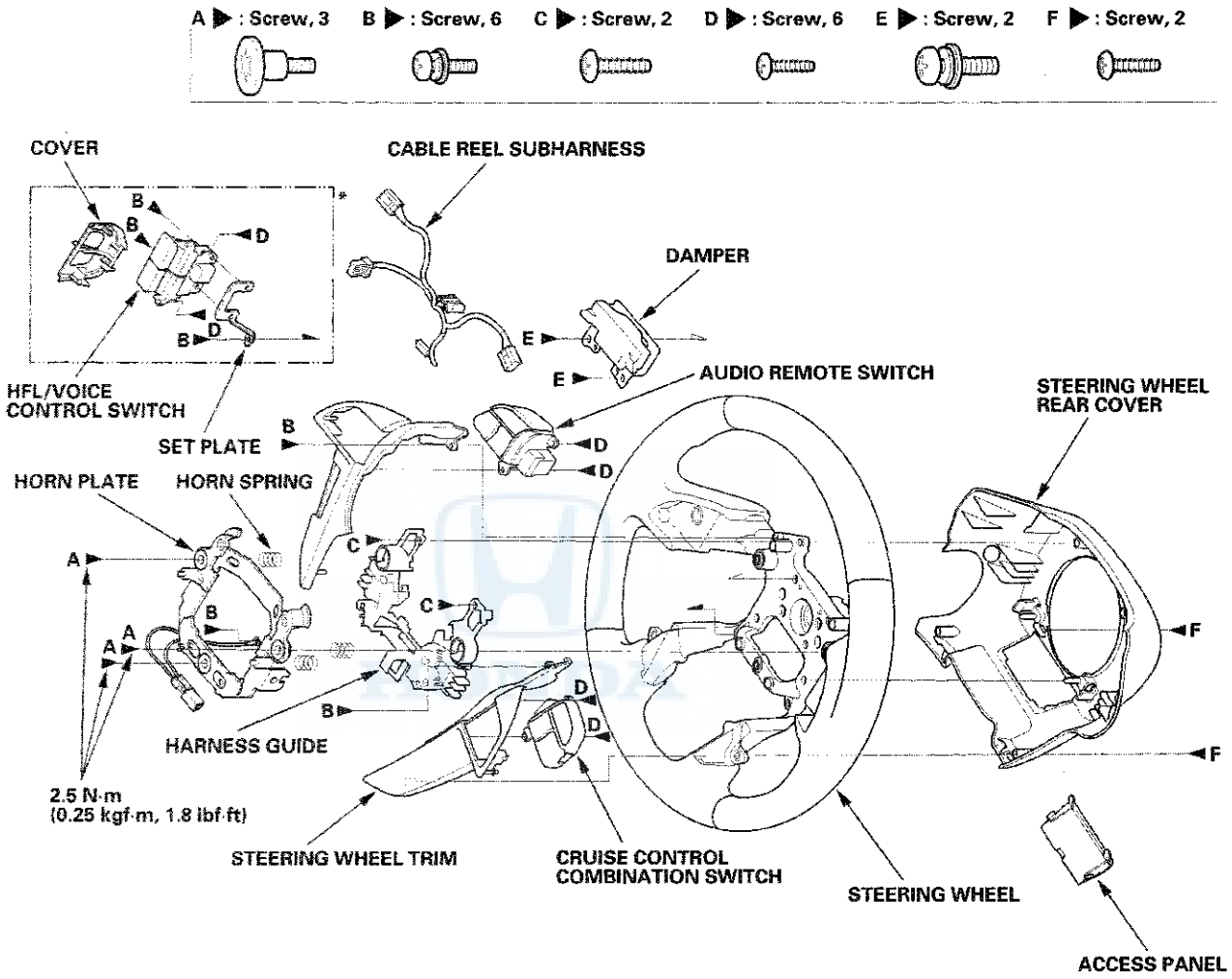

*: With Navigation

(cont'd)

Steering Wheel Disassembly/Reassembly (cont'd)

2-door

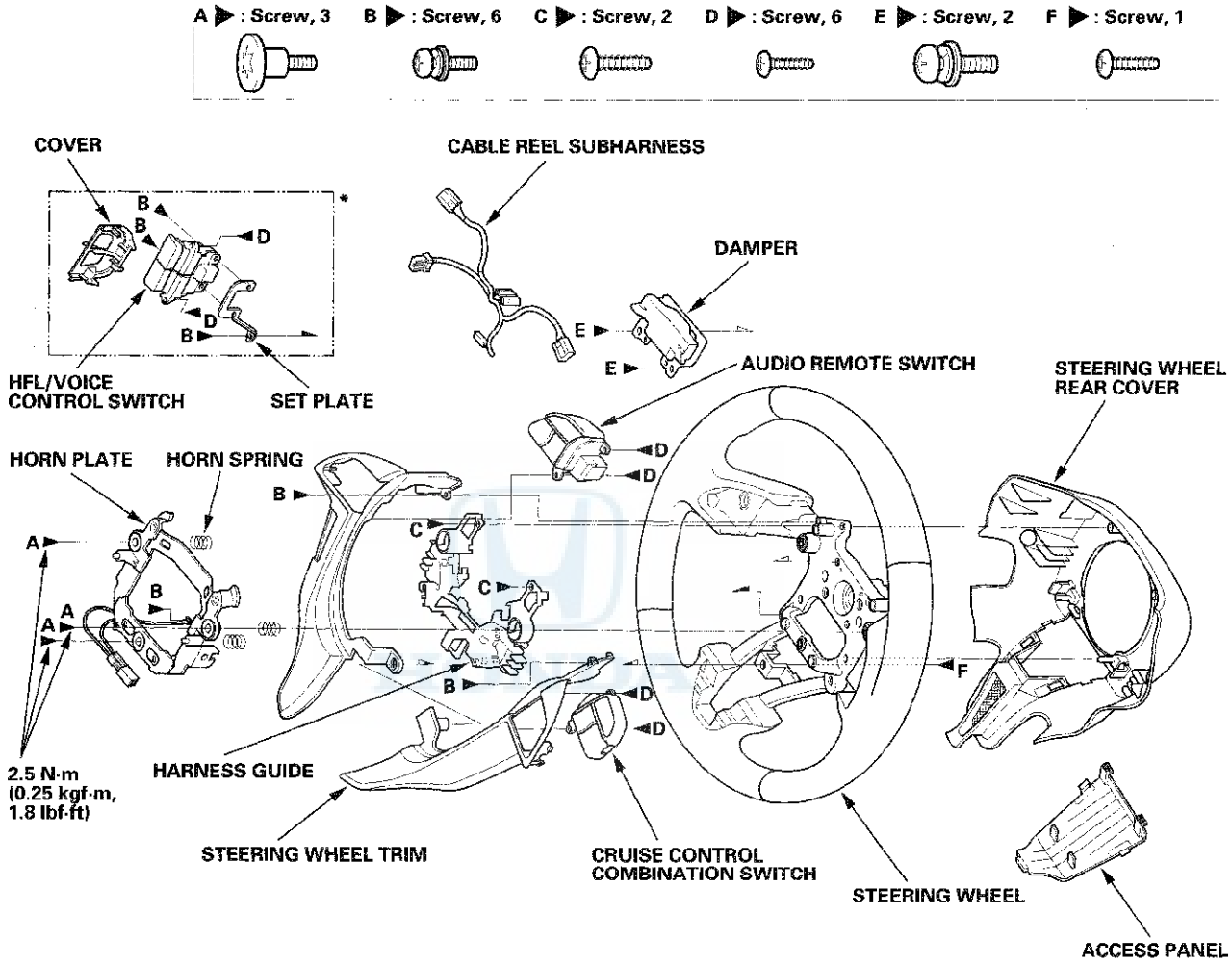

*: With Navigation

Steering Wheel Installation

1. Before installing the steering wheel, make sure the front wheels are pointing straight ahead, then center the cable reel (A). Do this by first rotating the cable reel clockwise until it stops. Then rotate it counterclockwise about three full turns. The arrow mark (B) on the cable reel label should point straight up.

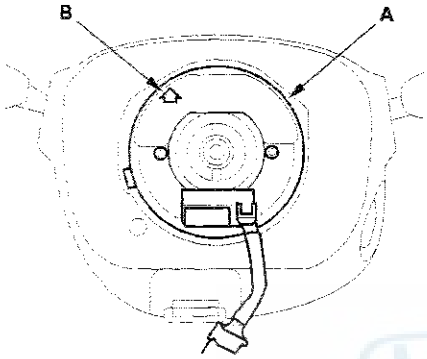

2. Position the two tabs (A) of the turn signal canceling sleeve (B) as shown. Install the steering wheel on to the steering column shaft, making sure the steering wheel hub (C) engages the pins (D) of the cable reel and tabs of the turn signal canceling sleeve. Do not tap on the steering wheel or steering column shaft when installing the steering wheel.

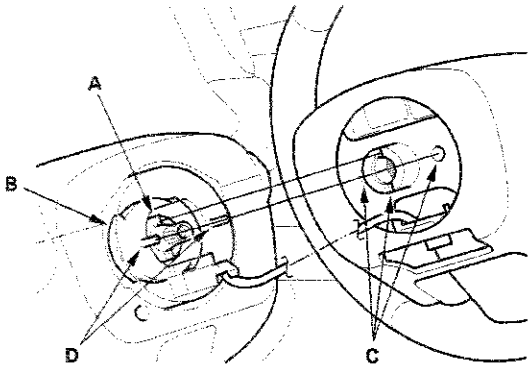

3. Install the steering wheel bolt (A), and tighten it to the specified torque. Connect the cable reel subharness connector (B). Make sure the wire harness is routed and fastened properly.

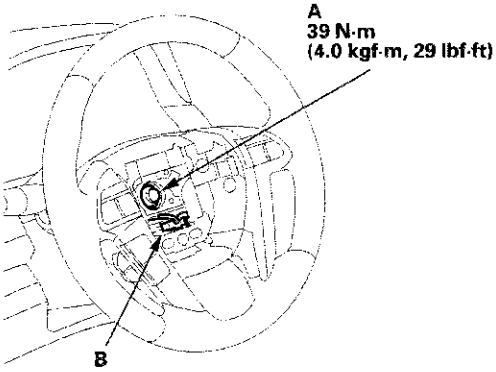

4. Install the driver's airbag (see page 24-205).

5. Do the battery terminal reconnection procedure (see page 22-89), and do these tasks:

   - Turn the ignition switch to ON (II) and check that the SRS indicator comes on for about 6 seconds and then goes off.
   - Make sure the horn and turn signal switches work properly.
   - Make sure the steering wheel switches work properly.

6. After installation, check the steering wheel spoke angle. If the steering spoke angles to the right and left are not equal (steering wheel is not centered), correct the engagement of the wheel/column shaft splines.

Steering Column Removal and Installation

SRS components are located in this area. Review the SRS component locations: 4-door (see page 24-19), 2-door (see page 24-21) and the precautions and procedures (see page 24-23) before doing repairs or service.

Removal

1. Adjust the steering column to the full tilt down position, and to the full telescopic out position.
2. Do the battery terminal disconnection procedure (see page 22-89).
3. Remove the driver's airbag (see page 24-205), and the steering wheel (see page 17-24).
4. Remove the steering column covers (see page 20-168).
5. Remove the steering joint cover (A).

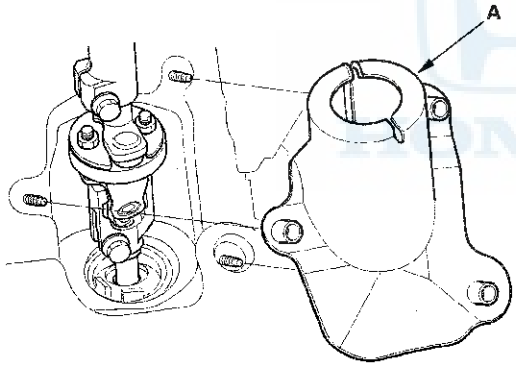

6. Loosen the upper steering joint bolt (A), and remove the lower steering joint bolt (B). Disconnect the steering joint (C) by moving the steering joint toward the column. Do not disconnect the steering joint from the column shaft (D).

   NOTE:
   - If the center guide (E) is in place and has not moved, leave it in place.
   - If the center guide has come off, discard it.

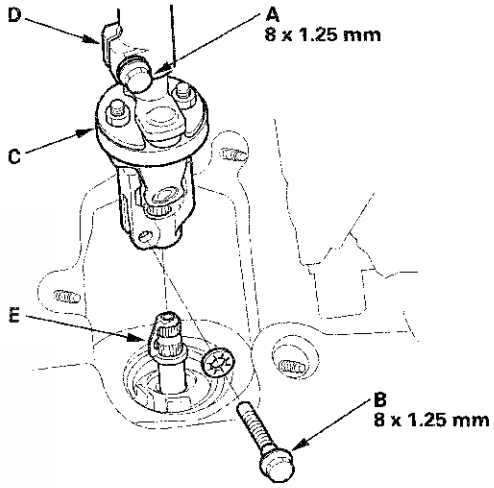

7. Disconnect the wire harness connectors from the combination switch assembly/cable reel (A).

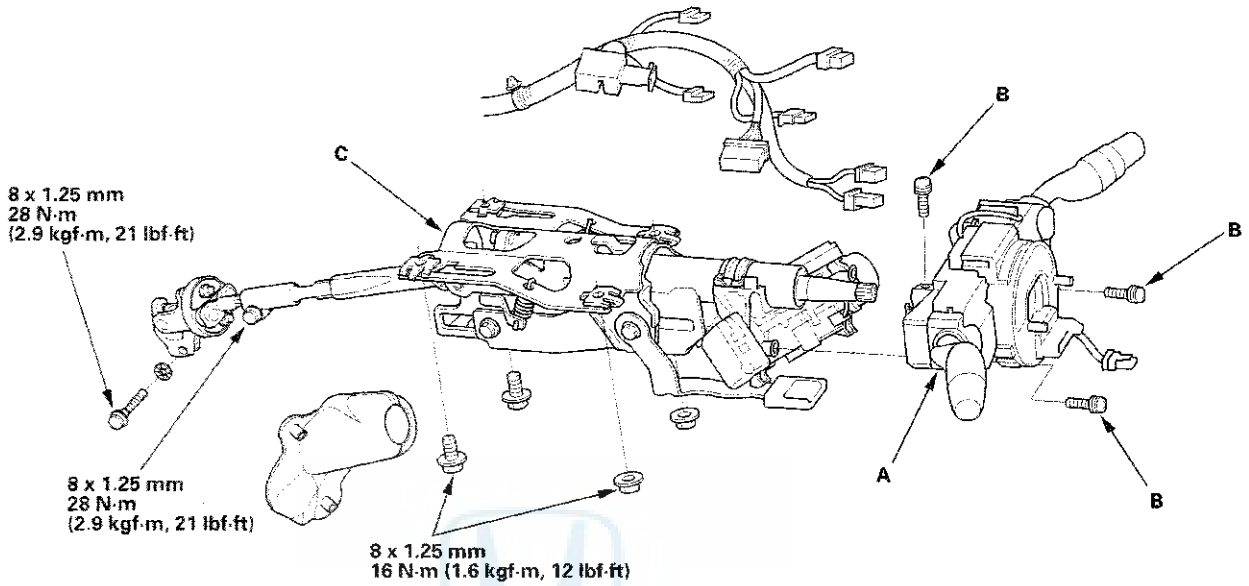

8. Remove the combination switch assembly/cable reel from the steering column shaft by removing the three screws (B).

9. Disconnect the connectors from the ignition switch, and release the wire harness clips from the steering column.

10. Remove the steering column (C) by removing the attaching nuts and bolts.

(cont'd)

Steering Column Removal and Installation (cont'd)

Installation

1. Install the steering column in the reverse order of removal, and note these items:

   - Make sure the wires are not caught or pinched by any parts.
   - Tighten the three screws (A) in the sequence shown.

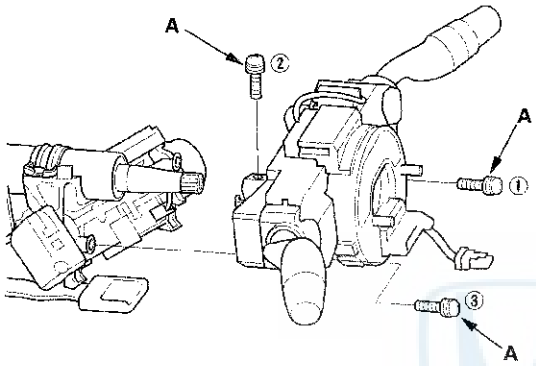

2. Center the steering rack within its stroke.

3. Slip the lower end of the steering joint (A) on to the pinion shaft (B).

   NOTE:
   - Pinion shaft with center guide; install the steering joint by aligning the center guide.
   - Pinion shaft without center guide; position the steering column by aligning the gap (C) within the angle.

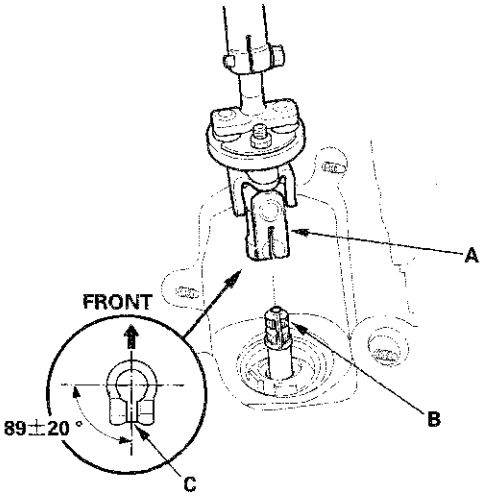

4. Align the bolt hole (A) on the steering joint with the groove (B) around the pinion shaft, then loosely install the lower steering joint bolt (C). Be sure that the joint bolt is securely in the groove in the pinion shaft.

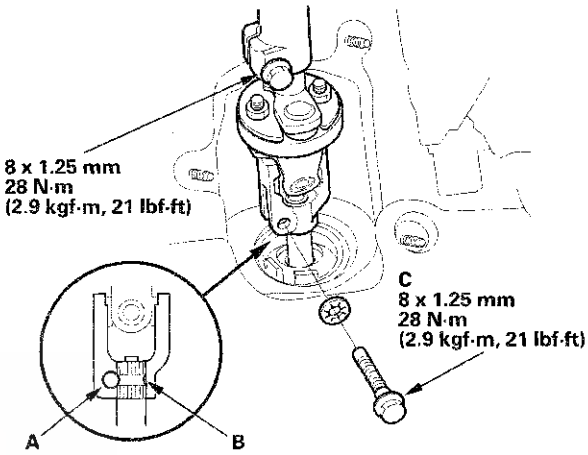

5. Pull on the steering joint to make sure that the steering joint is fully seated, then tighten the lower joint bolt to the specified torque.

6. Tighten the upper steering joint bolt to the specified torque.

7. Install the steering joint cover (A).

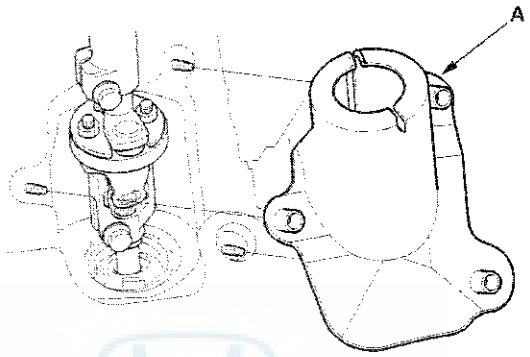

8. Install the steering wheel (see page 17-27), and the driver's airbag (see page 24-205).

9. Install the steering column covers (see page 20-168).

10. Do the battery terminal reconnection procedure (see page 22-89), and do these tasks:

    - Turn the ignition switch to ON (II) and check that the SRS indicator comes on for about 6 seconds and then goes off.
    - Make sure the horn and turn signal switches work properly.
    - Make sure the steering wheel switches work properly.

11. After installation, do these checks:

    - Check the steering wheel spoke angle. If the steering spoke angles to the right and left are not equal (steering wheel and rack are not centered), correct the engagement of the joint/pinion shaft splines.
    - Set the steering column to the center tilt position, and to the center telescopic position, then do the front toe inspection (see page 18-5).

Steering Column Inspection

Inspection

1. Remove the steering column (see page 17-28).

2. Do these checks:

   - Check for loose bearing mounting nuts (A). If they are loose, replace the column as an assembly.
   - Check the steering column ball bearings (B) and the steering joints (C) for play and proper movement. If any bearing is noisy or has excessive play, replace the steering column as an assembly.
   - Check the sliding capsules (D) for distortion or breakage. If there is distortion or breakage, replace the steering column as an assembly.
   - Check the tilt mechanism and telescopic mechanism for movement and damage.

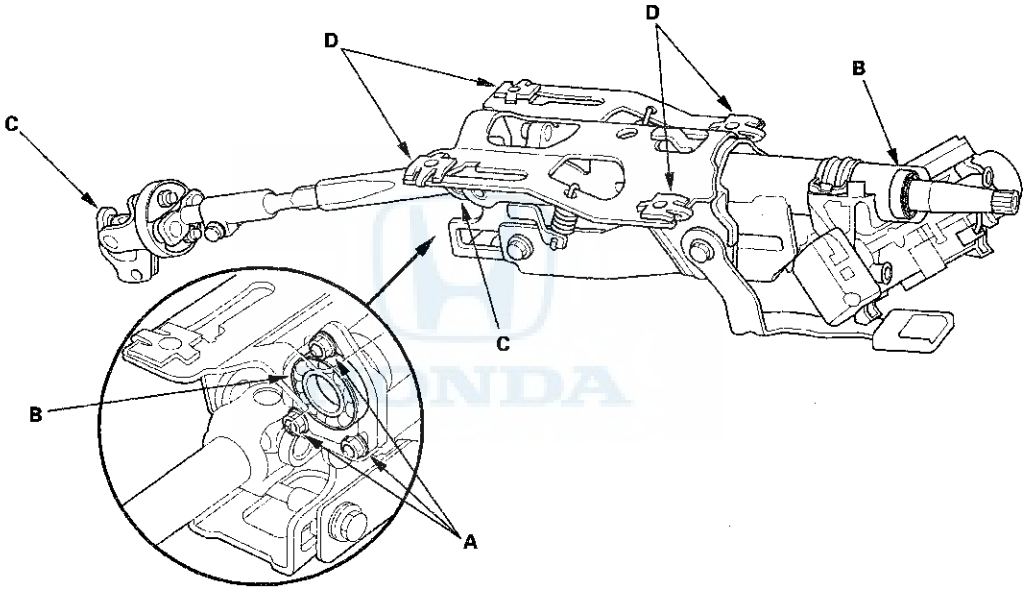

3. Install the steering column (see page 17-30).

Check of Tilting Force

1. Set the steering wheel in the straight ahead driving position, and loosen the lock lever fully.

2. Attach the spring scale to the highest point of the steering wheel, and tilt the steering column to the lowest position.

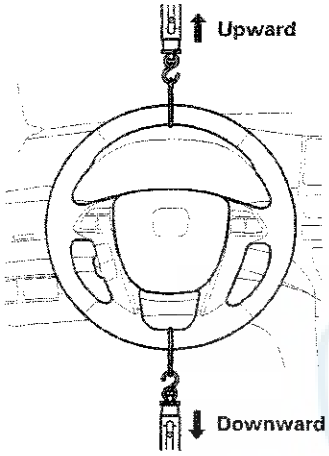

3. Pull the spring scale straight up, and read the force required to move the steering column.

4. Attach the spring scale to the lowest point of the steering wheel.

5. Pull the spring scale straight down, and read the force required to move the steering column.

   Tilting force (upward/downward):
   Standard: 70 N (7.1 kgf, 15 lbf) max.

6. If the measurement is higher than specified, replace the steering column as an assembly (see page 17-28).

Check of Telescoping Force

1. Set the steering wheel in the straight ahead driving position, and loosen the lock lever fully.

2. Attach the spring scale to the center point of the steering wheel as shown.

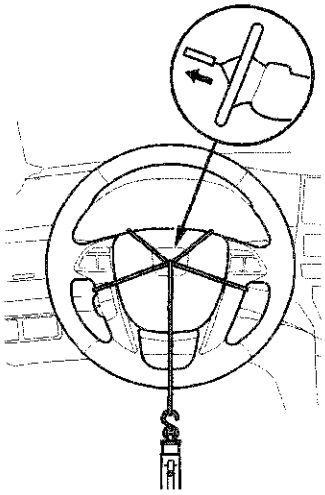

3. Pull the spring scale, and read the force required to move the steering column during telescoping.

   Telescoping force:
   Standard: 135 N (13.8 kgf, 30.3 lbf) max.

4. If the measurement is higher than specified, replace the steering column as an assembly (see page 17-28).

(cont'd)

Steering Column Inspection (cont'd)

Check of Lock Lever Force

1. Move the lock lever (A) from the loosened position to the locked position three to five times, then release the lock lever. Adjust the steering column to the center tilt position and also to the full telescopic out position, and hold the steering wheel.

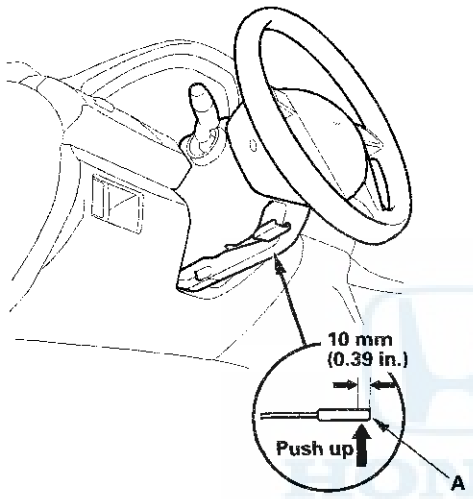

2. Using a commercially available push-pull gauge, push up the lock lever at 10 mm (0.39 in.) from its end, and measure the force required to move the lock lever.

   Lock lever force:
   50—85 N (5.1—8.7 kgf, 11—19 lbf) min.

3. If the measurement is higher than specified, replace the steering column as an assembly (see page 17-28).

Steering Lock Replacement

1. Remove the steering column (see page 17-28).
2. Center-punch both of the two shear bolts, and drill their heads off with a 5 mm (3/16 in.) drill bit. Be careful not to damage the switch body when removing the shear bolts.

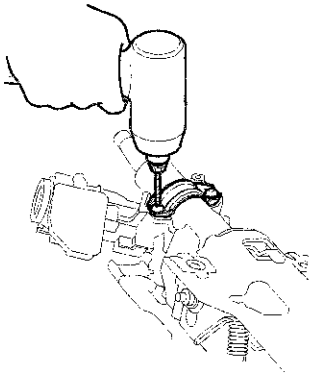

3. Remove the shear bolts from the switch body.
4. Install the switch body without the key inserted.
5. Loosely tighten the new shear bolts.
6. Insert the ignition key, and check for proper operation of the steering wheel lock and that the ignition key turns freely.
7. Tighten the shear bolts (A) until the hex heads (B) twist off.

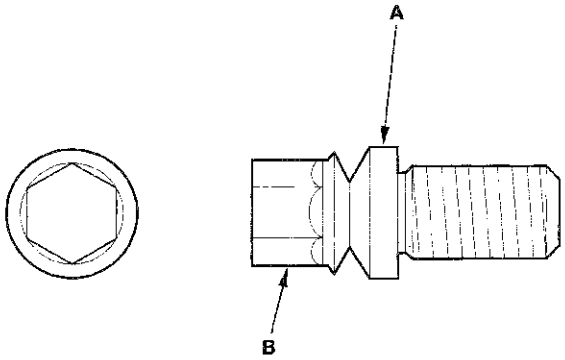

8. Rewrite the new immobilizer control unit-receiver (see page 22-402), and make sure the immobilizer system works properly.
9. Install the steering column (see page 17-30).

Rack Guide Adjustment

Special Tools Required
Locknut wrench, 40 mm 07MAA-SL00100

1. Set the wheels in the straight ahead position.

2. Loosen the rack guide screw locknut (A) with the locknut wrench, then remove the rack guide screw (B).

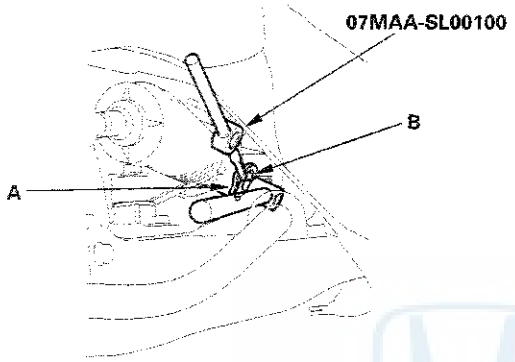

3. Remove the old sealant from the rack guide screw (A), and apply new sealant (Three Bond 1215 or Loctite 5699) to the middle of the threads (B). Loosely install the rack guide screw on the steering gearbox.

   NOTE: If more than 5 minutes has passed after applying the sealant, remove the old sealant and residue, and reapply new sealant.

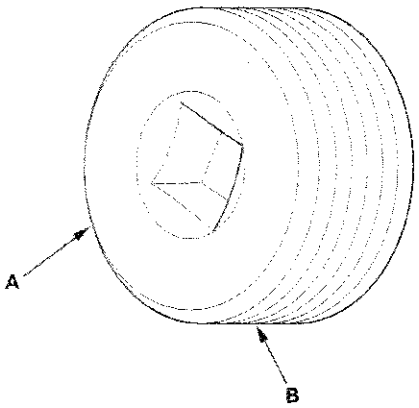

4. Tighten the rack guide screw (A) to 25 N·m (2.5 kgf·m, 18 lbf·ft), then loosen it.

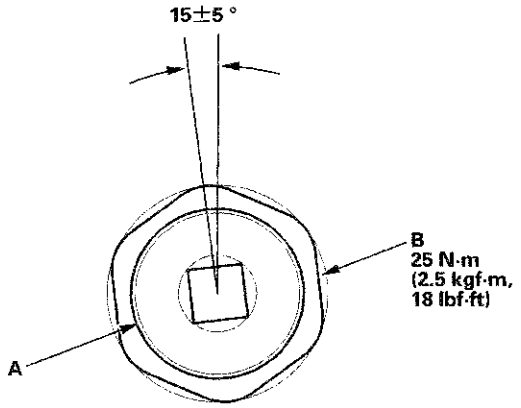

5. Retighten the rack guide screw to 3.9 N·m (0.4 kgf·m, 4 lbf·ft), then back it off to the specified angle.

   Specified return angle: 15±5 °

6. Hold the rack guide screw stationary with a wrench, and tighten the locknut by hand until it's fully seated.

7. Install the locknut wrench on the locknut (B), and hold the rack guide screw stationary with a wrench. Tighten the locknut to the specified torque.

8. Check for unusual steering effort through the complete turning range.

9. Check the steering wheel rotation play (see page 17-9) and the power assist (see page 17-9).

Steering Gearbox Removal

Special Tools Required
- Ball joint remover, 28 mm 07MAC-SL0A202
- Engine hanger adapter VSB02C000015 *
- Front subframe adapter VSB02C000016 *
- Engine support hanger, A and Reds AAR-T1256 *

* : These special tools are available through the Honda Tool and Equipment Program, 888-424-6857.

Note these items during removal:
- Using solvent and a brush, wash any oil and dirt off the valve body unit, it's lines, and the end of the steering gearbox. Blow dry with compressed air.
- Be sure to remove the steering wheel before disconnecting the steering joint, or damage to the cable reel can occur.
- Lower the front subframe from the body and remove the steering gearbox through the gap produced by lowering the front subframe.

1. Drain the power steering fluid (see page 17-14).
2. Do the battery terminal disconnection procedure (see page 22-89).
3. Raise the vehicle, and support it with safety stands in the proper locations (see page 1-11).
4. Remove the front wheels.
5. Remove the driver's airbag (see page 24-205), and the steering wheel (see page 17-24).
6. Remove steering joint cover (A).

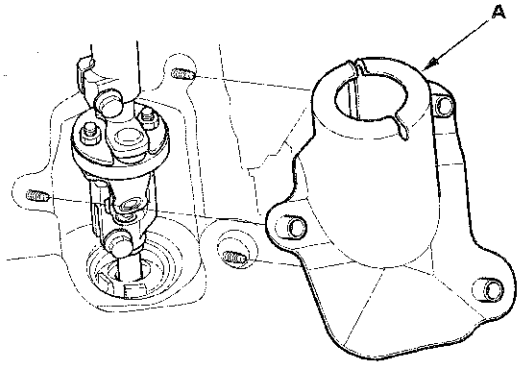

7. Loosen the upper steering joint bolt (A), and remove the lower steering joint bolt (B). Disconnect the steering joint (C) by moving the steering joint toward the column. Do not disconnect the steering joint from the column shaft (D).

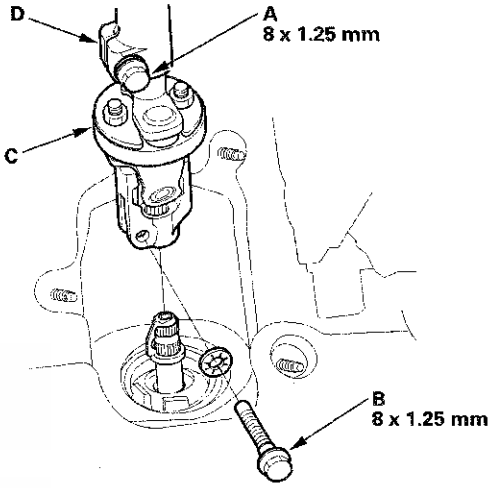

8. Remove the center guide (A) (if equipped) from the top of the pinion shaft (B), and discard it. The center guide is for factory assembly use only.

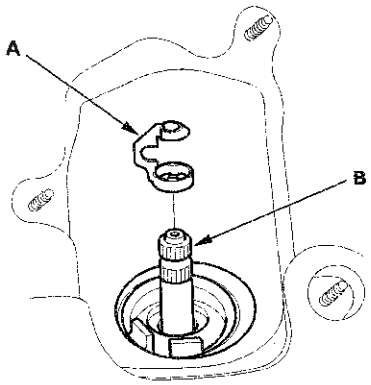

9. Apply vinyl tape to the splines on the pinion shaft.

10. Remove the hood support rod, then use it as shown to prop the hood in the wide-open position.

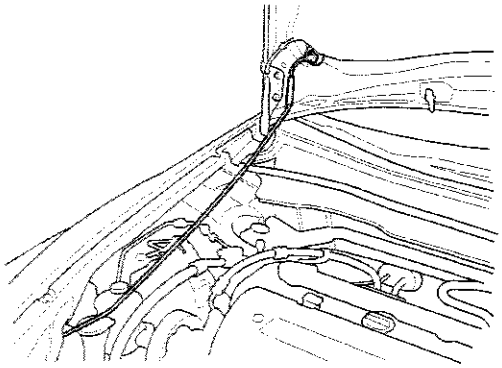

11. Remove the front grille cover:

- 2-door (see page 20-257)
- 4-door (see page 20-257)

12. Remove the strut brace (if equipped) (see page 20-289).

13. Remove the P/S heat shield (A).

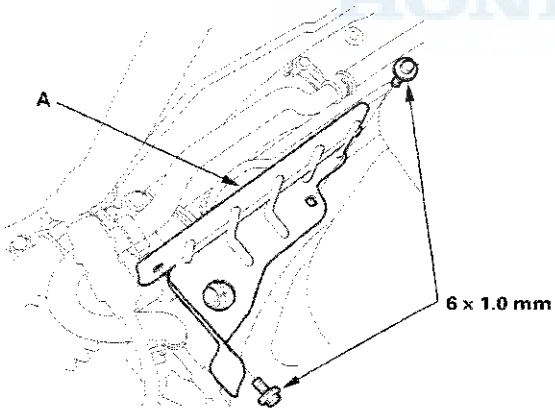

14. Attach the engine hanger adapter (VSB02C000015) to the threaded hole in the cylinder head.

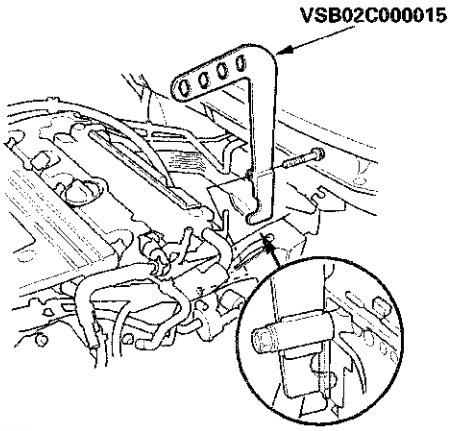

15. Install the engine support hanger (AAR-T1256), then attach the hook to the slotted hole in the hanger adapter. Tighten the wing nut (A) by hand to lift and support the engine/transmission.

NOTE: Be careful when working around the windshield.

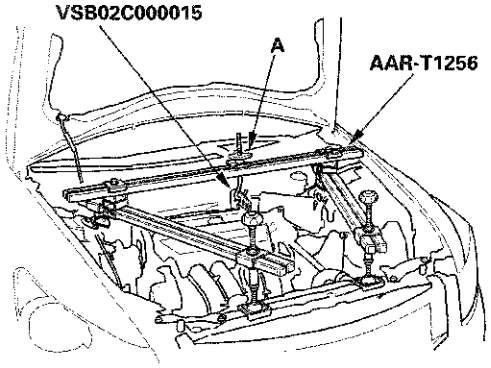

(cont'd)

Steering Gearbox Removal (cont'd)

16. Remove the rear engine mount (A).

A/T

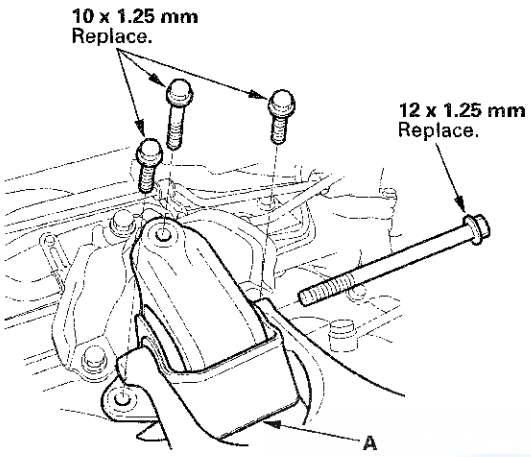

M/T

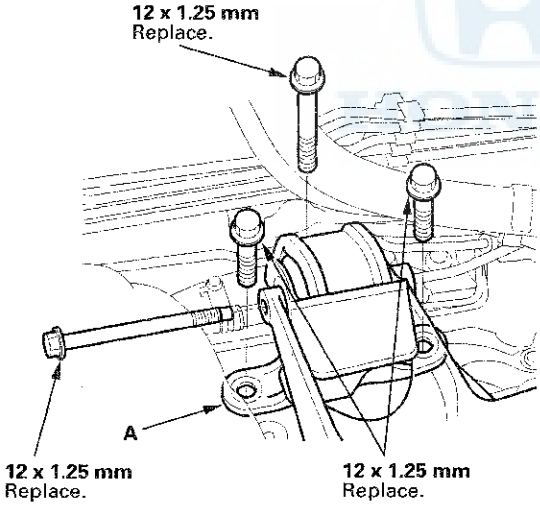

17. A/T: Remove the rear engine mount upper bracket (A) from the base bracket (B).

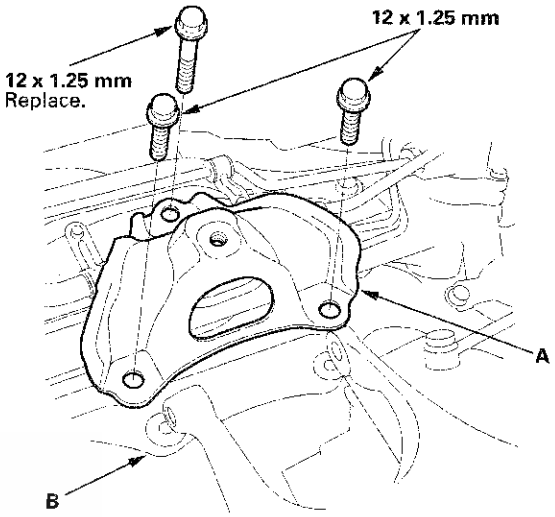

18. Remove the inlet line clamp bolt (A) and the return line clamp bolt (B).

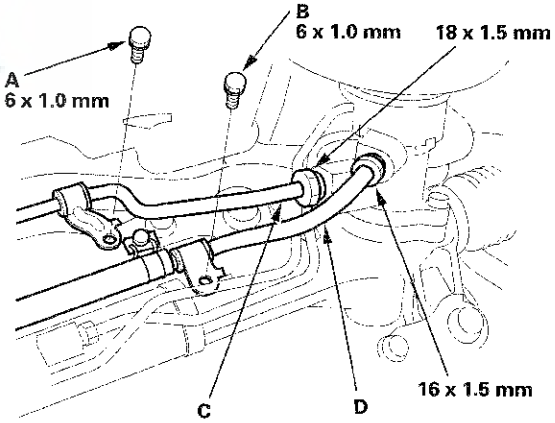

19. Loosen the flare nuts, and disconnect the inlet line (C) and the return line (D).

20. Remove the inlet line clamp bolt (A) and the return hose clamp bolt (B).

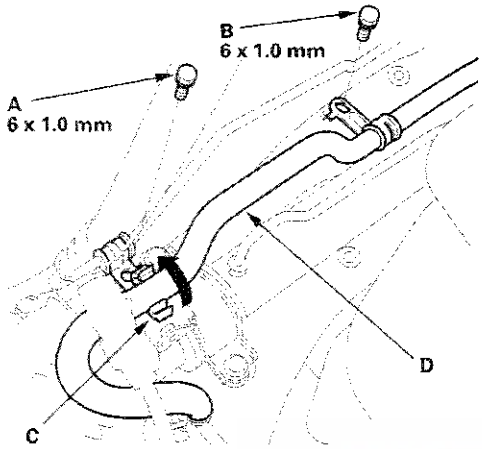

21. Release the return hose clamp (C), and remove the return hose (D).

22. Remove the return line clamp bolt (A).

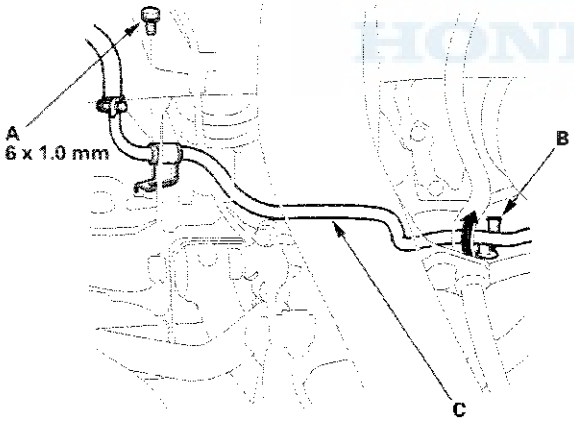

23. Release the return line clamp (B), and remove the return line (C).

24. Remove the flange bolts from the passenger's side of the steering gearbox, then remove the gearbox mounting bracket (A) and mounting cushion (B).

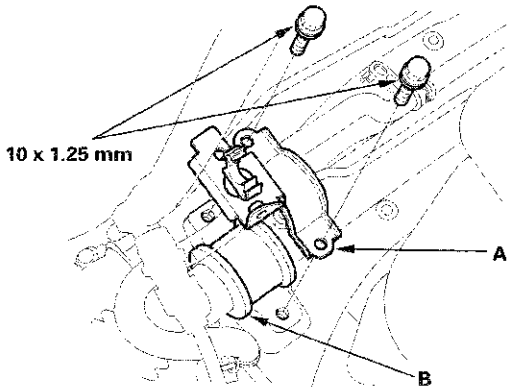

25. Remove the mounting bolts (A) and the flange bolts (B) from the driver's side of the steering gearbox, and remove the stiffener plates (C) and the washers (D).

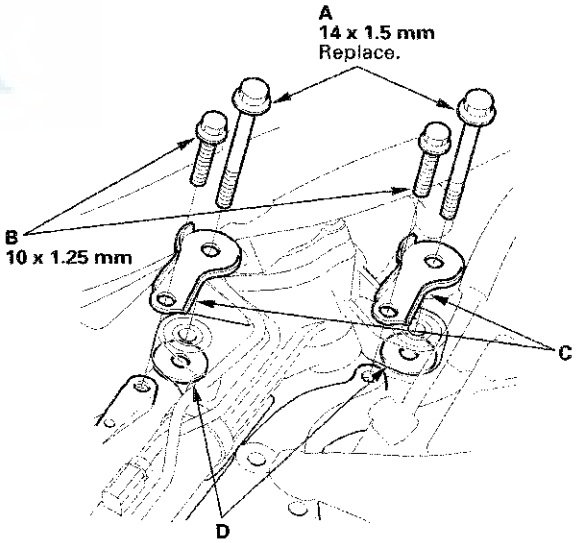

(cont'd)

Steering Gearbox Removal (cont'd)

26. Remove cotter pin (A) from the tie-rod ball joint, then remove the nut (B) on both sides.

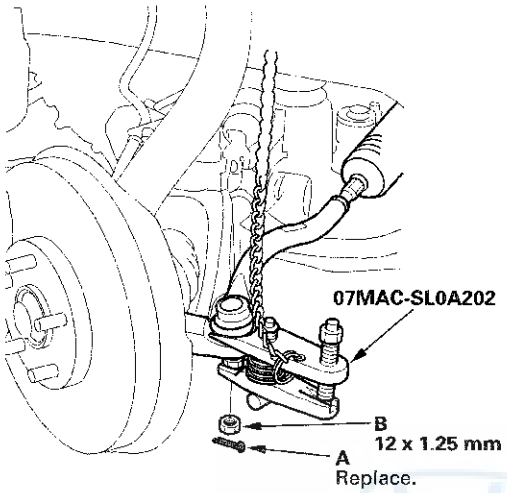

27. Separate the tie-rod ball joint and knuckle using the ball joint remover (see page 18-11).

28. Raise the vehicle on a lift.

29. Remove the front splash shield (see page 20-274).

30. Remove exhaust pipe A (see page 9-8).

31. Remove the damper fork mounting nut (A) and the mounting bolt (B).

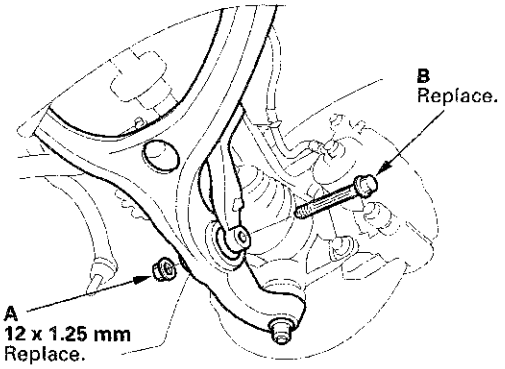

32. Attach the front subframe adapter (VSB02C000016) to the subframe by looping the strap (A) over the front of the subframe, then secure the strap with the stop (B), then tighten the wing nut (C).

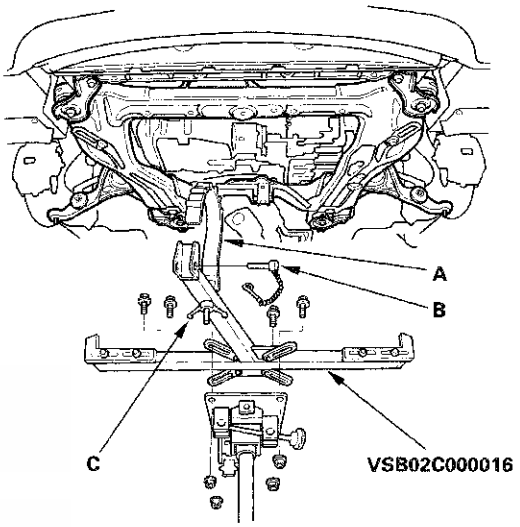

33. Remove the front subframe middle mounting bolts on the passenger's side.

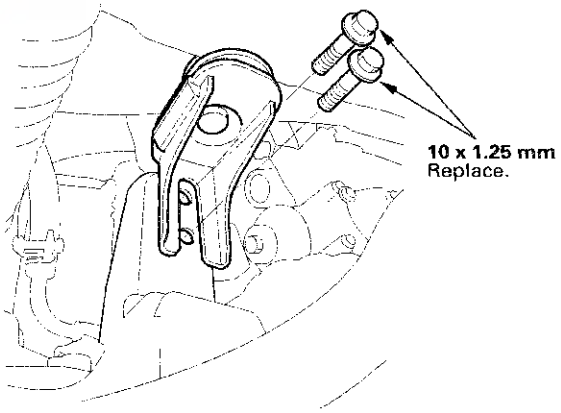

34. Remove the front subframe middle mount (A) on the driver's side.

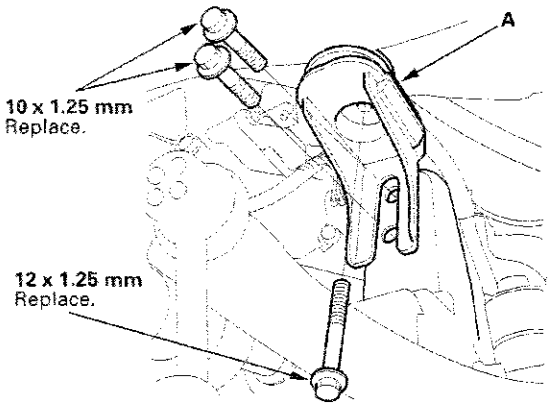

35. Remove the flange nuts (A) from the lower transmission mount.

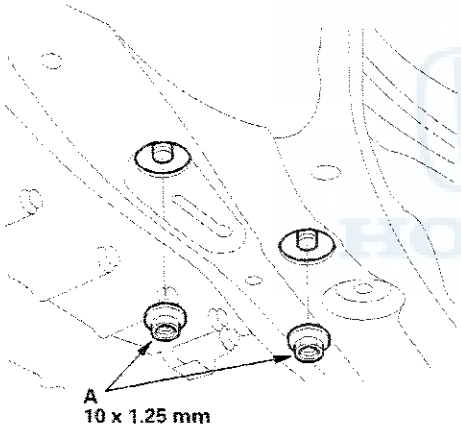

36. Remove the flange bolts (A) from the front subframe front stiffeners (B).

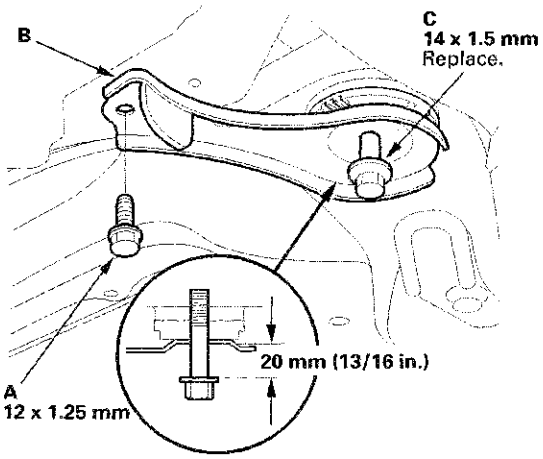

37. Loosen the front subframe mounting bolts (C) so they are about 20 mm (13/16 in.) from the mounting surface. Do not loosen the front subframe mounting bolts more than necessary.

38. Remove the flange bolts (A) and front subframe mounting bolts (B) from the front subframe rear stiffeners (C).

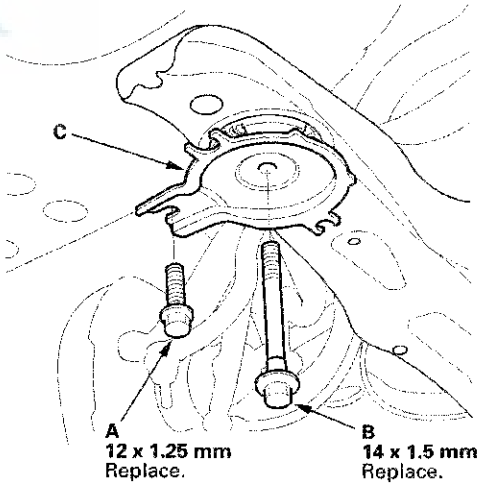

(cont'd)

Steering Gearbox Removal (cont'd)

39. Lower the jack slowly until the front subframe has dropped about 69 mm (2 11/16 in.).

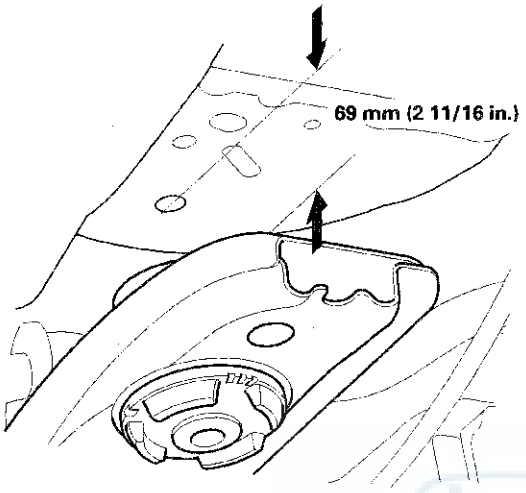

40. Carefully move the steering gearbox (A) toward the driver's side until the pinion shaft clears the fenderwell opening on the body.

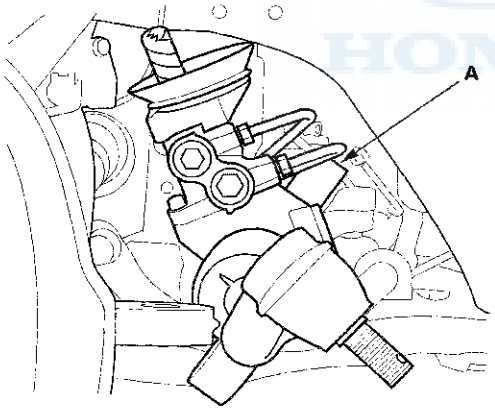

41. Remove the steering gearbox (A) through the fenderwell opening on the driver's side.

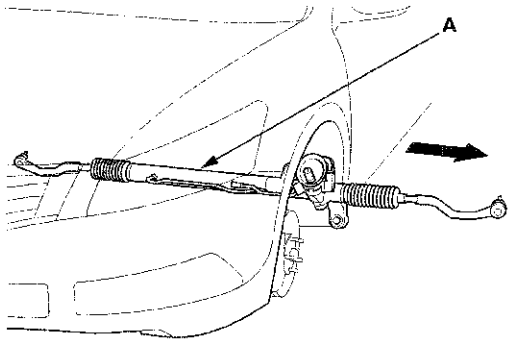

42. Remove the pinion shaft grommet (A) from the top of the valve housing.

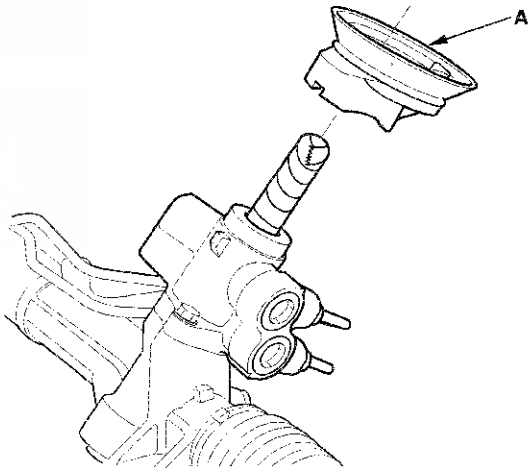

43. After removing the steering gearbox, make sure that no power steering fluid gets on the gearbox mount cushions, the gearbox housing, the surface of the front subframe, and stiffener. Wipe off any spilled fluid at once.

Steering Gearbox Overhaul

Exploded View

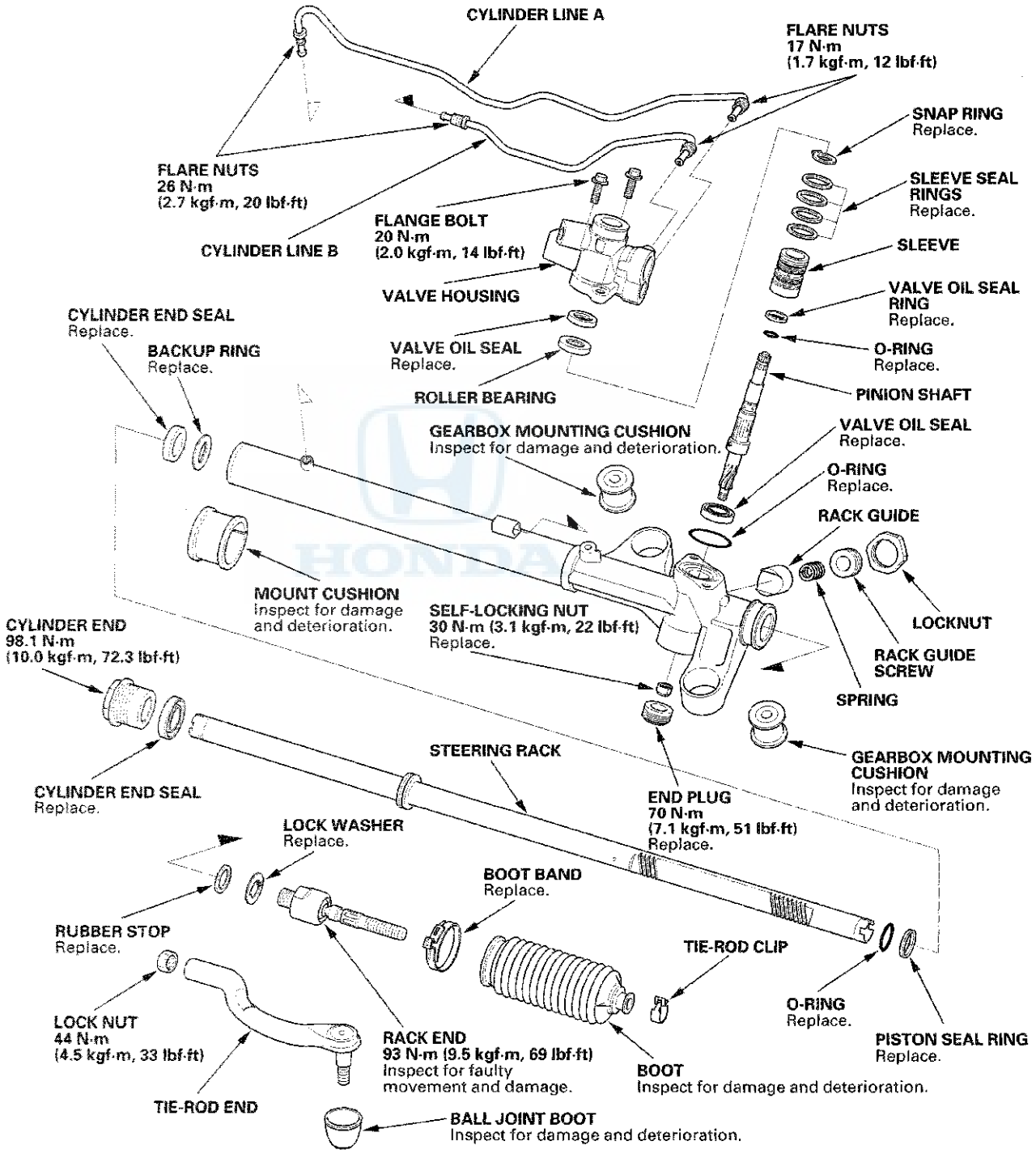

(cont'd)

Steering Gearbox Overhaul (cont'd)

Special Tools Required
- Cylinder end seal remover attachment 07TAF-SZ50100
- Valve seal ring sizing tool 07NAG-SR3090A
- Sleeve seal ring guide 07YAG-S2X0100
- Sleeve seal ring sizing tool, 36 mm 07ZAG-S5A0100
- Attachment, 28 x 30 mm 07946-1870100
- Driver handle, 15 x 135 L 07749-0010000
- Piston seal ring guide 07XAG-S0KA200
- Oil seal driver, 65 mm 07JAD-PL9A100
- Attachment, 30 mm I.D. 07746-0030300
- Piston seal ring sizing tool 07HAG-SF1020A
- Pincers Oetiker 1098 or equivalent, commercially available

Disassembly

1. Remove the steering gearbox (see page 17-36).
2. Remove the tie-rod end from the rack end.
3. Drill a 4.0 mm (0.16 in.) diameter hole about 2.5—3.0 mm (0.10—0.12 in.) in depth in the staked points (A) on the end plug (B) and the gearbox housing (C).

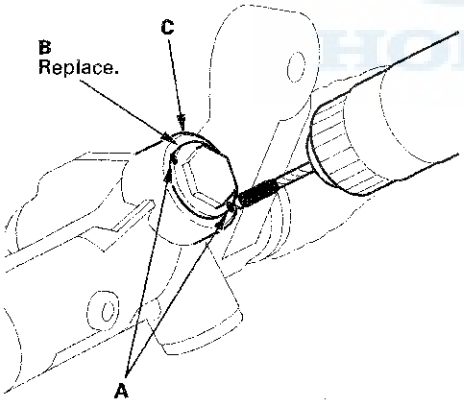

4. Remove the end plug (A) from the gearbox housing, then remove the self-locking nut (B) from the pinion shaft end.

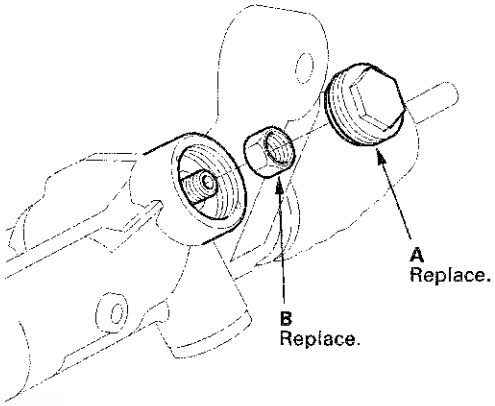

5. Remove the boot bands (A) and tie-rod clips (B). Pull the boot away from the ends of the steering gearbox.

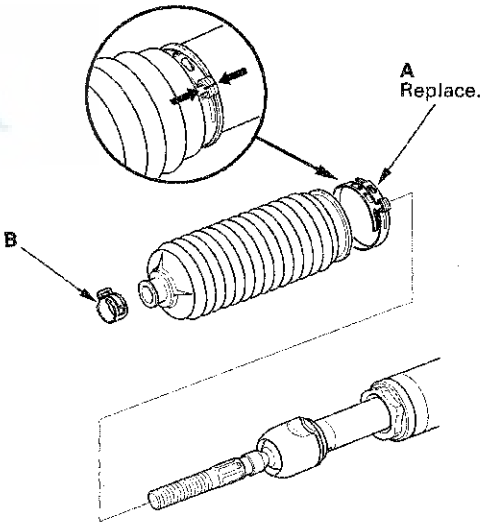

6. Hold the gearbox housing using a C-clamp (A) and wooden blocks (B) as shown. Do not clamp the cylinder part of the gearbox housing in a vise.

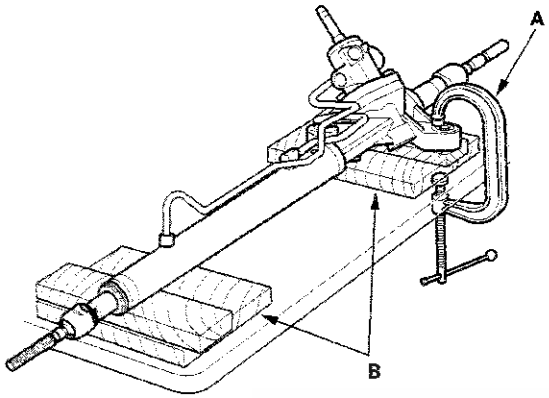

7. Unbend the lock washers (A).

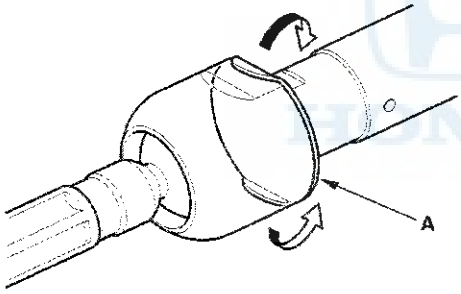

8. Hold the flat surface sections (A) of the steering rack (B) with one wrench, and unscrew both rack ends (C) with another wrench. Be careful not to damage the rack surface with the wrench.

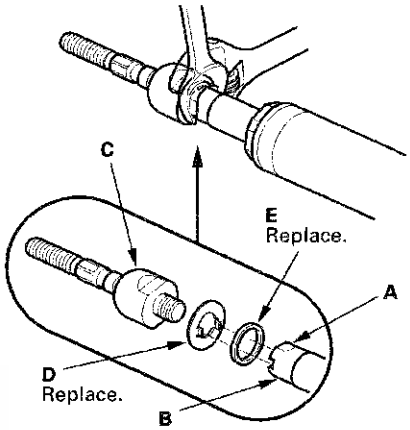

9. Remove the lock washer (D) and rubber stop (E).

10. Loosen the locknut (A), then remove the rack guide screw (B).

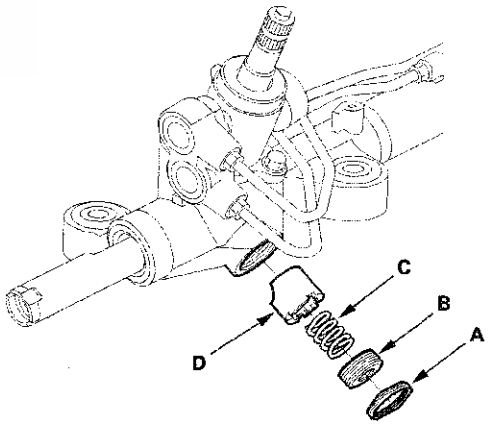

11. Remove the spring (C), and the rack guide (D) from the gearbox housing.

(cont'd)

Steering Gearbox Overhaul (cont'd)

12. Remove the cylinder line A and B from the steering gearbox.

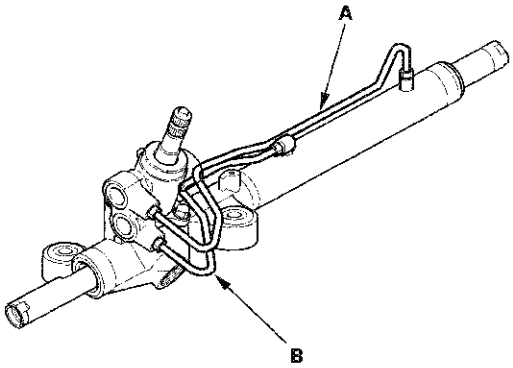

13. Drain the fluid from the cylinder fittings by slowly moving the steering rack back and forth.

14. Remove the two flange bolts, then remove the valve body unit (A) from the gearbox housing (B). Remove the O-ring (C).

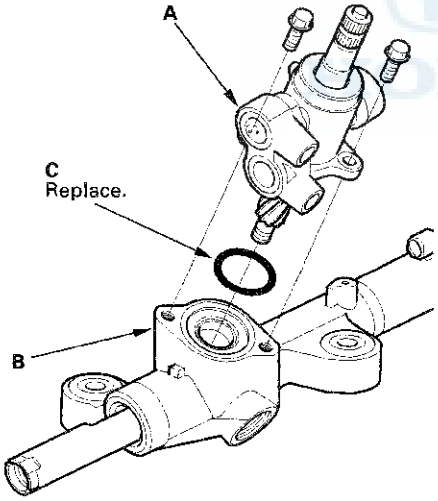

15. Apply vinyl tape (A) to the end of the steering rack and the gearbox housing. Drill a 3.0—4.0 mm (0.12—0.16 in.) diameter hole about 2.5—3.0 mm (0.10—0.12 in.) in depth in the staked point (B) on the cylinder. Do not allow metal shavings to enter the cylinder side on the gearbox housing. After removing the cylinder end (C), remove any burrs at the staked point.

NOTE: Apply vinyl tape (D) to the drill, and do not drill the depth more than necessary.

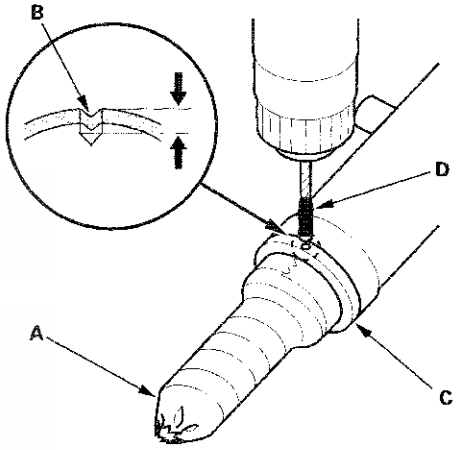

16. Hold the gearbox housing using a C-clamp (A) and wooden blocks (B) as shown. Do not clamp the cylinder part of the gearbox housing in a vise. Remove the vinyl tape. Then remove the cylinder end (C).

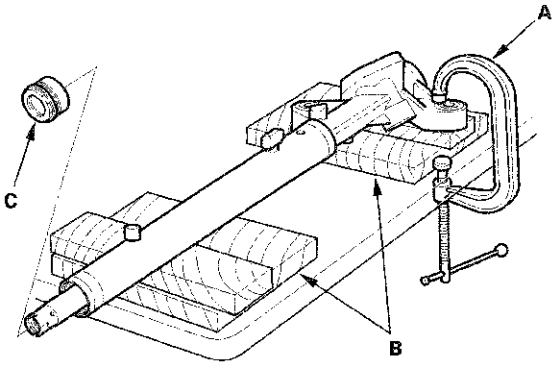

17. Install a commercially available bearing separator (A) on the gearbox housing as shown.

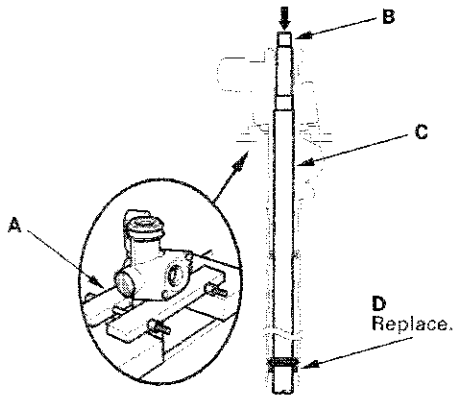

18. Place an appropriate size deep socket wrench (B) on the steering rack (C).

19. Set the steering gearbox in a press so the gearbox housing side points upward, then press the cylinder end seal (D) and steering rack out of the steering gearbox. Hold the steering rack to keep it from falling when pressed clear. Be careful not to damage the inner surface of the cylinder side on the gearbox housing with the tool.

20. Carefully pry the piston seal ring (A) and O-ring (B) off the rack piston. Be careful not to damage the inside of the seal ring groove and piston edges when removing the seal ring.

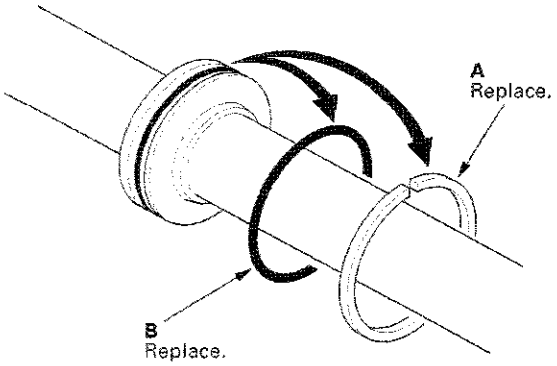

21. Turn the cylinder end seal remover attachment so it will fit through the rack guide hole of the gearbox housing, then position the seal remover on the backup ring (A). Make sure that the seal remover is securely positioned on the backup ring.

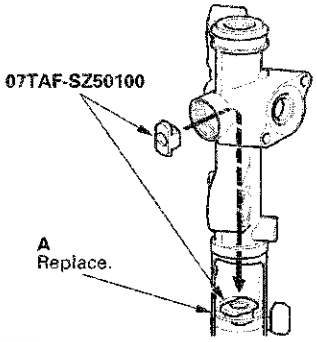

22. Insert a 24" long 3/8" drive extension (A), on the cylinder end seal remover attachment. Place the gearbox housing in a press, then remove the backup ring (B) and cylinder end seal (C) from the gearbox housing by pressing on the 24" long 3/8" drive extension.

Note these items when pressing the backup ring and cylinder end seal:
- Keep the tool straight to avoid damaging the cylinder wall. Check the tool angle, and correct it if necessary, when removing the backup ring and cylinder end seal.
- Use a press to remove the backup ring and cylinder end seal. Do not try to remove the backup ring and cylinder end seal by striking the tool; striking the tool would break the backup ring and cylinder end seal, and the backup ring and cylinder end seal would remain in the gearbox housing.

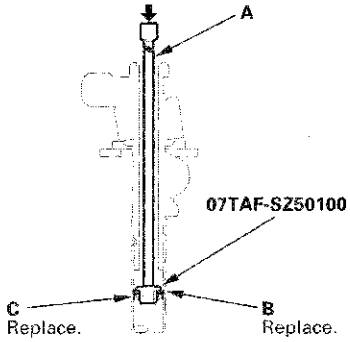

(cont'd)

Steering Gearbox Overhaul (cont'd)

23. Apply vinyl tape (A) to the splines on the pinion shaft.

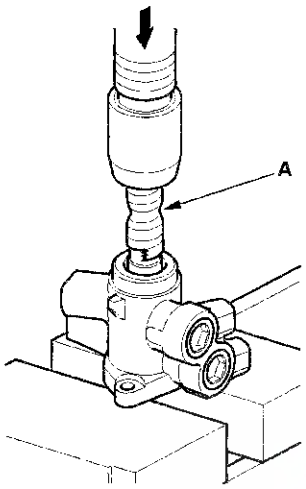

24. Separate the valve housing (A) from the pinion shaft/sleeve (B) and valve oil seal (C).

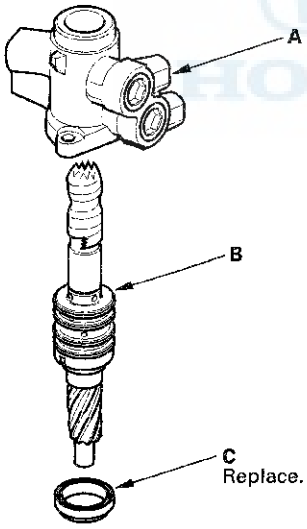

25. With your finger, check the inner wall of the valve housing where the seal ring slides. If there is a step in the wall, the housing is worn. Replace it.

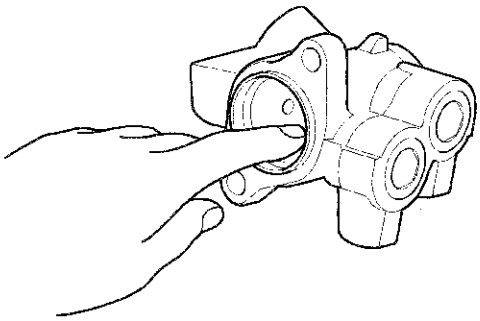

26. Check for wear, burrs, and other damage to the edges of the grooves in the sleeve.

NOTE: The pinion shaft and sleeve are a precision matched set. If either the pinion shaft or sleeve must be replaced, replace both parts as a set.

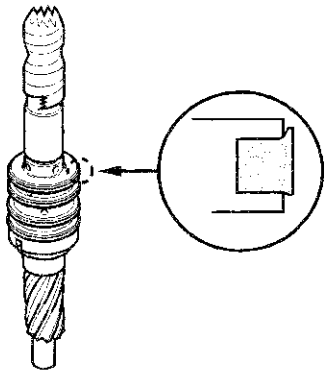

27. Remove the snap ring (A) and sleeve (B) from the pinion shaft (C).

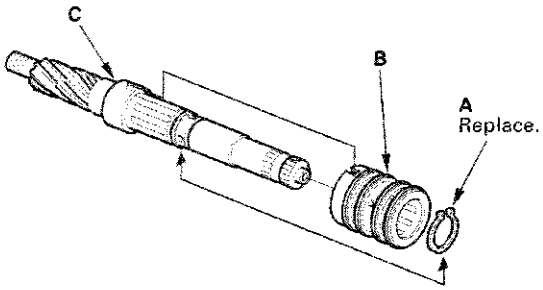

28. Using a cutter or an equivalent tool, cut and remove the four seal rings from the sleeve. Be careful not to damage the edges of the sleeve grooves and outer surface when removing the seal rings.

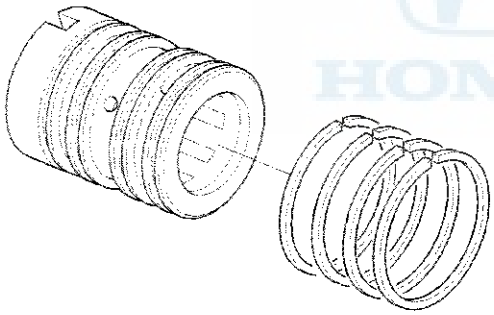

29. Using a cutter or an equivalent tool, cut the valve seal ring (A) and O-ring (B) at the cutting groove position (C) in the pinion shaft. Remove the valve seal ring and O-ring. Be careful not to damage the edges of the pinion shaft groove and outer surface when removing the valve seal ring and O-ring.

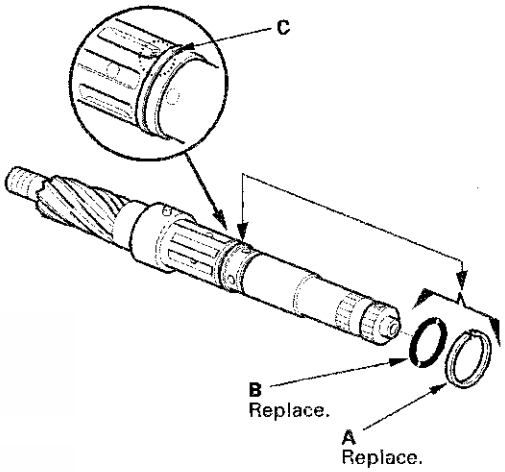

30. Remove the valve oil seal (A) and roller bearing (B) out of the valve housing using a hydraulic press and an appropriate size socket wrench.

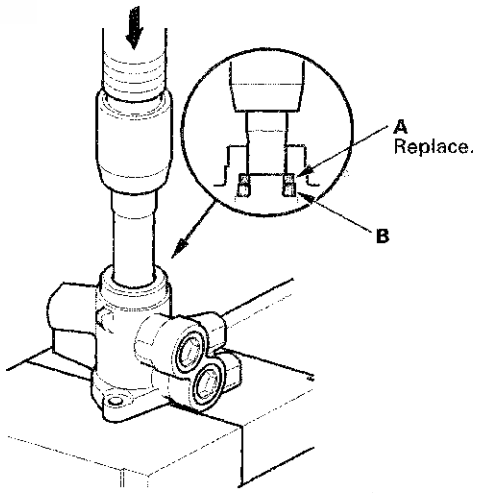

31. Clean the disassembled parts with solvent, and dry them with compressed air. Do not dip rubber parts in the solvent.

(cont'd)

Steering Gearbox Overhaul (cont'd)

Reassembly

32. Apply vinyl tape (A) to the splines and stepped portion of the shaft, and coat the surface of the vinyl tape with power steering fluid.

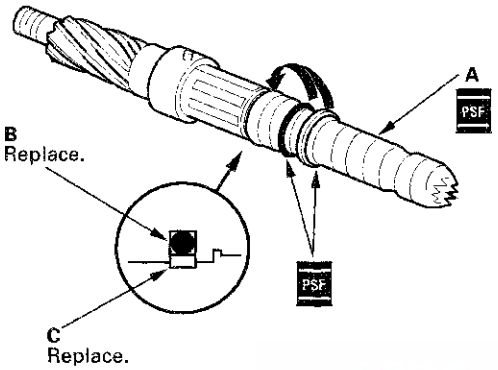

33. Fit the new O-ring (B) in the groove of the pinion shaft. Then slide the new valve seal ring (C) over the shaft and in the groove on the pinion shaft.

34. Remove the vinyl tape, and apply power steering fluid to the surface of the valve seal ring (A).

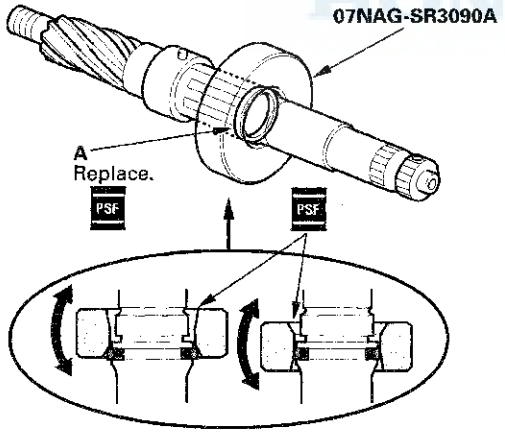

35. Apply power steering fluid to the inside of the valve seal ring sizing tool. Set the larger diameter end of the sizing tool over the valve seal ring, and move the sizing tool up and down several times to make the valve seal ring fit in the pinion shaft groove.

36. Remove the sizing tool, turn it over, slide the smaller diameter end over the valve seal ring. Move it up and down several times to make the valve seal ring fit snugly in the pinion shaft groove.

37. Apply power steering fluid to the surface of the sleeve seal ring guide. Slip two new seal rings (A) over the ring guide from the smaller diameter end, and expand them. Install only two rings at a time from each end of the pinion shaft sleeve (B).

    Note these items when installing the seal ring:
    - Do not over-expand the seal ring. Install the resin seal rings with care so as not to damage them. After installation, make sure you contract the seal rings using the sizing tool.
    - There are two types of sleeve seal rings; black and brown. Do not mix the different types of rings as they are not compatible.

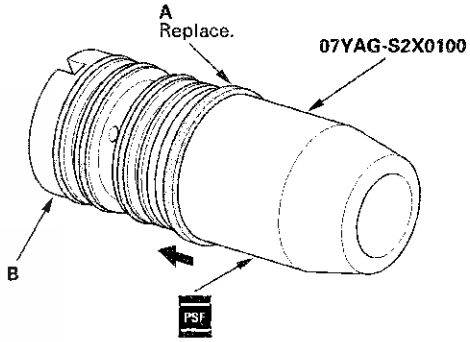

38. Align the ring guide with each groove in the sleeve, and slide a sleeve seal ring into each groove. After installation, compress the seal rings with your fingers temporarily.

39. Apply power steering fluid to the seal rings on the sleeve, and to the entire inside surface of the sleeve seal ring sizing tool, then slowly insert the sleeve into the sizing tool.

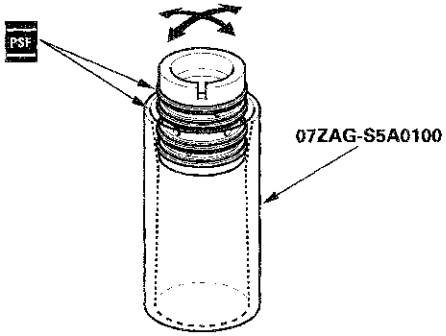

40. Move the sleeve back and forth several times to make sure the seal rings fit snugly in the sleeve. Make sure the seal rings are not twisted.

41. Apply power steering fluid to the surface of the pinion shaft (A). Slide the sleeve (B) onto the pinion shaft by aligning the locating pin (C) on the pinion shaft with the cutout (D) in the sleeve. Then install the new snap ring (E) securely in the pinion shaft groove. Be careful not to damage the valve seal ring when installing the sleeve.

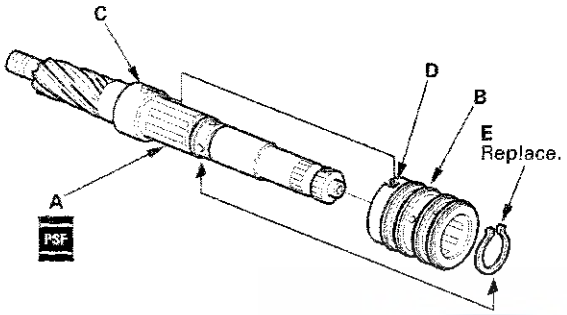

42. Apply power steering fluid to the seal ring lip of the new valve oil seal (A), then install the seal in the valve housing (B) using a hydraulic press and driver handle. Install the seal with its grooved side facing the tool.

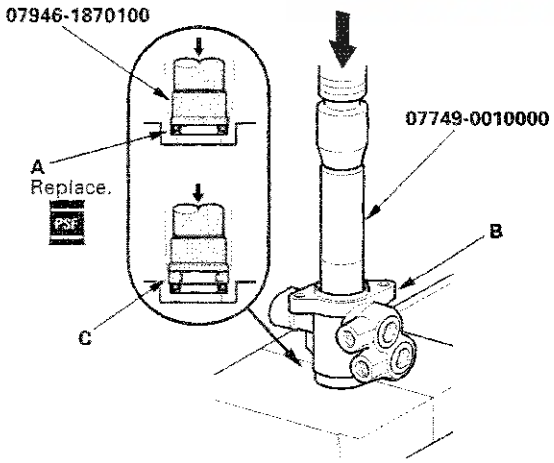

43. Press the roller bearing (C) into the valve housing with a hydraulic press and attachment.

44. Apply vinyl tape (A) to the pinion shaft/sleeve (B), then coat the vinyl tape with power steering fluid.

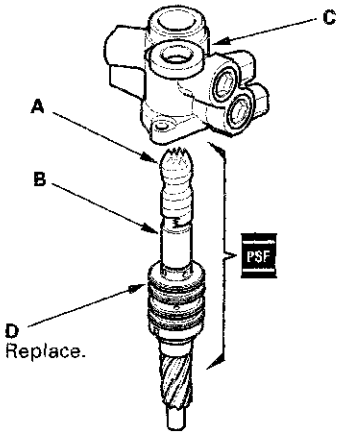

45. Insert the pinion shaft/sleeve into the valve housing (C). Be careful not to damage the valve seal rings (D).

46. Remove the vinyl tape from the pinion shaft, then remove any residue from the tape adhesive.

47. Press the new valve oil seal (A) into the valve housing with a hydraulic press. Check that the pinion shaft/sleeve turns smoothly by hand after installing it.

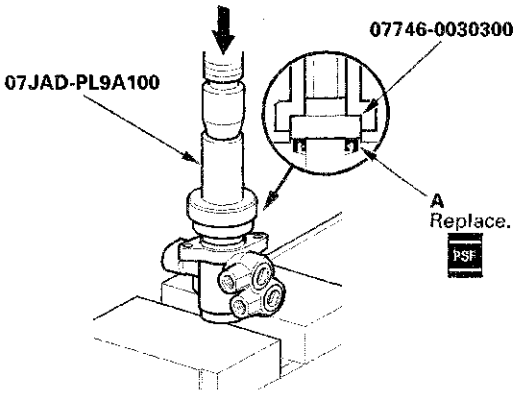

48. Coat the piston seal ring guide with power steering fluid, then slide it onto the rack, big end first.

(cont'd)

Steering Gearbox Overhaul (cont'd)

49. Position the new O-ring (A) and new piston seal ring (B) on the piston seal ring guide, then slide them down toward the big end of the tool.

    Note these items during reassembly:
    - Do not over expand the resin seal rings. Install the resin seal rings with care so as not to damage them. After installation, make sure you contract the seal ring using the sizing tool.
    - Replace the piston's O-ring and seal ring as a set.

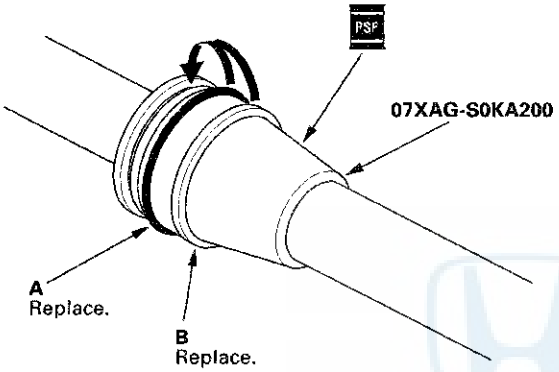

50. Pull the O-ring off into the piston groove, then pull the piston seal ring off into the piston groove on top of the O-ring.

51. Coat the piston seal ring (A) and the inside of the piston seal ring sizing tool with power steering fluid, then carefully slide the tool onto the rack and over the piston seal ring.

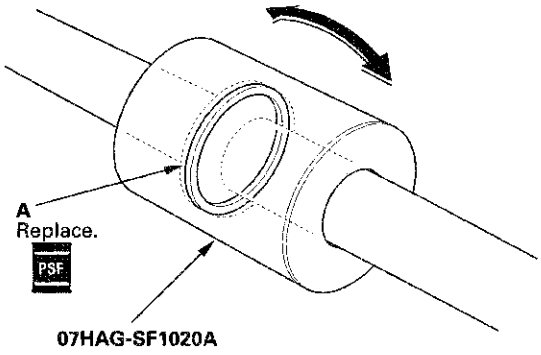

52. Move the sizing tool back and forth several times to make the piston seal ring fit snugly in the piston.

53. Wrap vinyl tape around the rack teeth and rack end edges, then coat the surface of the tape with power steering fluid. Make sure that the vinyl tape is wrapped carefully so that there is no stepped portion.

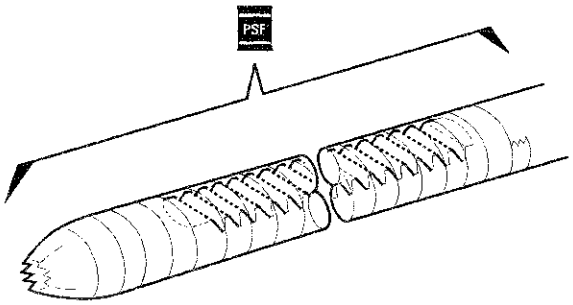

54. Coat the inside surface of the new cylinder end seal (A) with power steering fluid, then install it onto the steering rack with its grooved side toward the piston. When installing the cylinder end seal, be careful not to damage the lip of the seal with the edges or teeth of the steering rack.

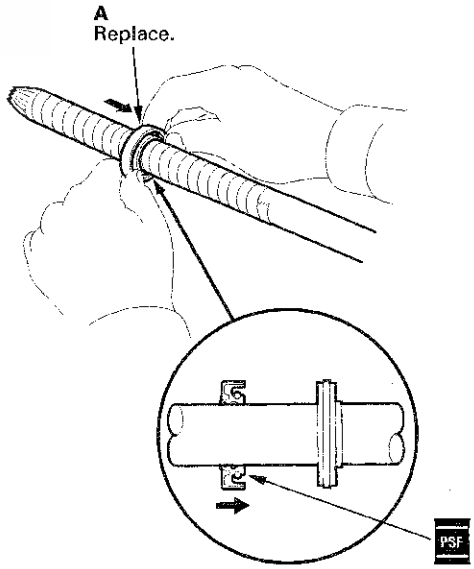

55. Remove the vinyl tape from the steering rack, then remove any adhesive residue.

56. Install the new backup ring (A) on the steering rack, then place the backup ring and cylinder end seal (B) against the piston (C).

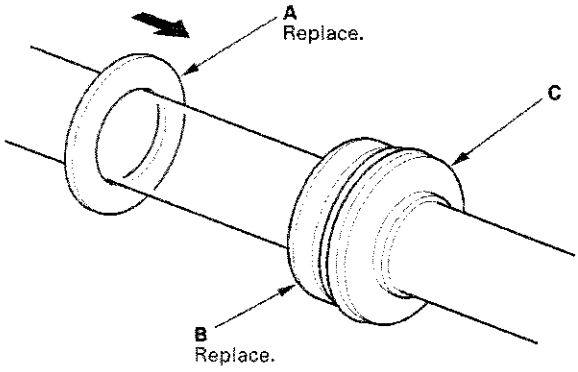

57. Apply steering grease to the steering rack teeth, then insert the steering rack into the gearbox housing. Be careful not to damage the inner surface of the cylinder wall with the rack edges.

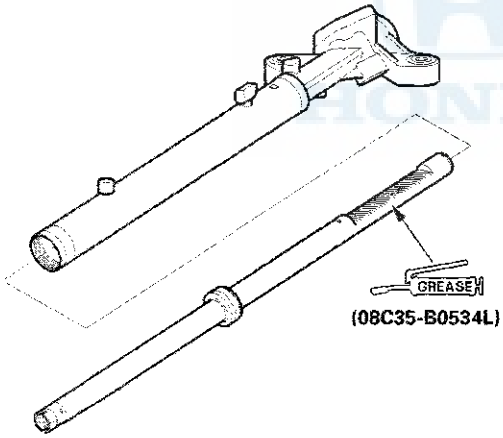

58. Insert an appropriate size socket wrench (A) onto the steering rack as shown.

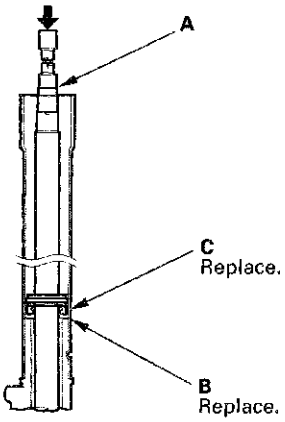

59. Install the backup ring (B) and cylinder end seal (C) into the bottom of the cylinder by pressing on the tool with a press. Do not push on the tool with excessive force as it may damage the backup ring and cylinder end seal.

60. Remove the tool, and center the steering rack.

61. Coat the inside surface of the new cylinder end seal (A) and steering rack with power steering fluid, then install the cylinder end seal onto the steering rack with its grooved side toward the cylinder.

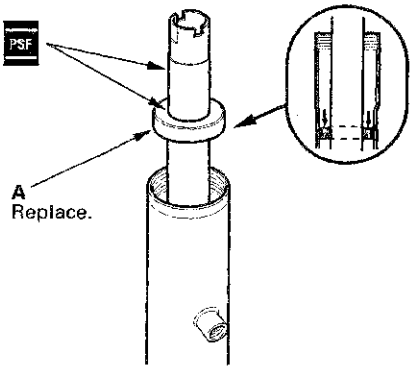

62. Push in the cylinder end seal with your finger. Be careful not to damage the surface of the seal with the threads and burrs at the staked position of the cylinder housing.

(cont'd)

Steering Gearbox Overhaul (cont'd)

63. Hold the gearbox housing using a C-clamp (A) and wooden blocks (B). Do not clamp the cylinder part of the gearbox housing in a vise.

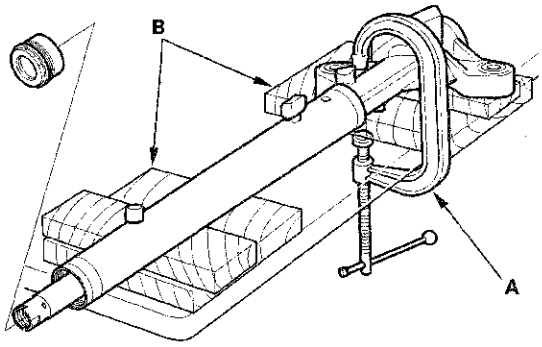

64. Coat the inside surface of the cylinder end (A) with power steering fluid, then install the cylinder end by screwing it into the cylinder (B). Tighten the cylinder end to the specified torque.

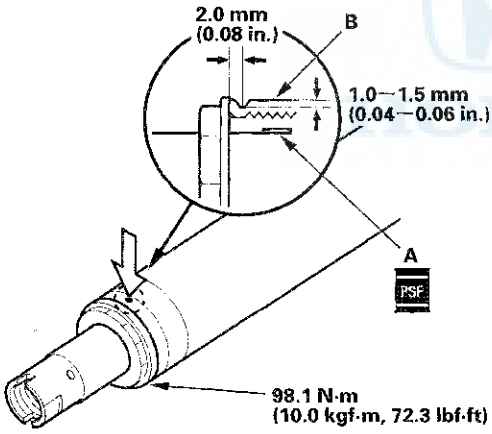

65. Stake the point of the cylinder shown (opposite from where the stake was removed during disassembly).

66. Coat the new O-ring (A) with steering grease, and carefully fit it on the valve housing.

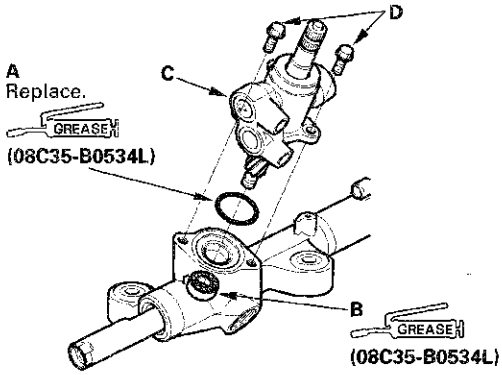

67. Apply steering grease to the ball bearing (B) in the gearbox housing, then install the valve body unit (C) by engaging the gears. Note the valve body unit installation position (direction of the line connections).

68. Loosely install the flange bolts (D).

69. Install the cylinder line A and B to the steering gearbox.

Note these items during reassembly:
- Thoroughly clean the joints of the cylinder lines. The joints must be free of foreign material.
- Install the cylinder lines by tightening the flare nuts by hand first, then tighten the flare nuts to the specified torque.

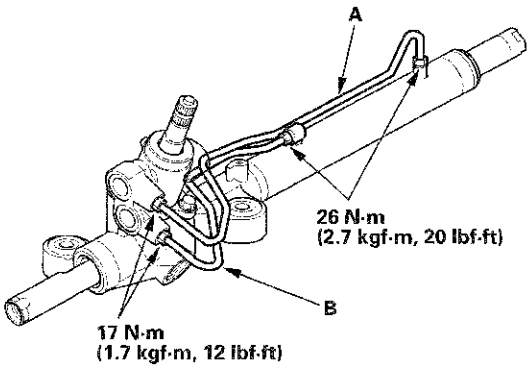

70. Apply steering grease to the sliding surface of the rack guide (A), and install it onto the gearbox housing.

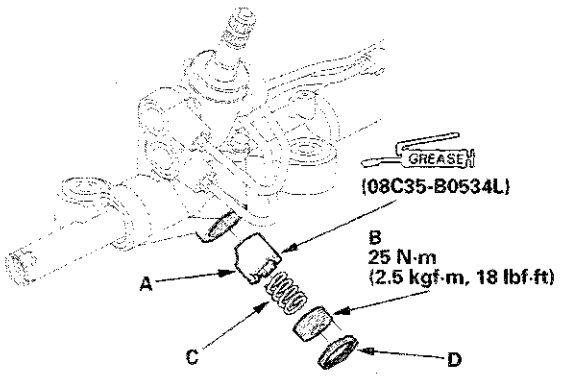

71. Remove the old sealant from the rack guide screw (B), then apply new sealant (Three Bond 1215 or Loctite 5699) to the middle of the threads. Install the spring (C), rack guide screw, and locknut (D).

NOTE: If more than 5 minutes has passed after applying the sealant, remove the old sealant and residue, and reapply new sealant.

72. Adjust the rack guide screw (see page 17-35). After adjusting, check that the rack moves smoothly by sliding it right and left.

73. Hold the gearbox housing using a C-clamp (A) and wooden blocks (B) as shown. Do not clamp the cylinder part of the gearbox housing in a vise.

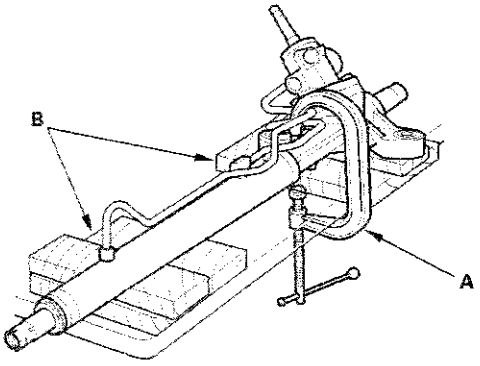

74. Install a new rubber stop (A) and a new lock washer (B). Align the lock washer tabs (C) with the slots (D) on the rack end (E) while holding the lock washer in place. Repeat this step for the other side of the rack.

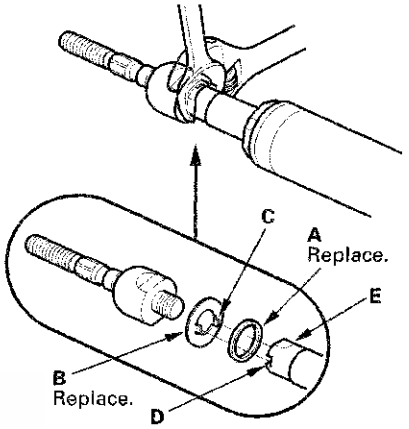

75. Hold the flat surface sections of the steering rack with one wrench, and tighten both rack ends with another wrench. Be careful not to damage the rack surface with the wrench.

76. Bend the lock washer (A) back against the flat spots on the rack end joint housing.

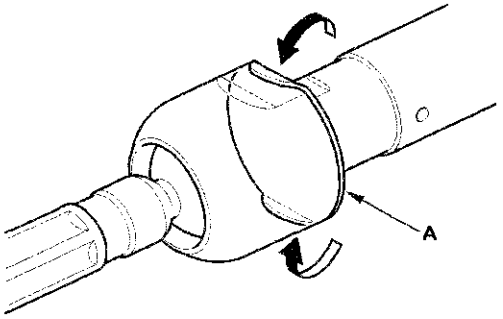

(cont'd)

Steering Gearbox Overhaul (cont'd)

77. Apply multipurpose grease to the circumference of the rack end joint housing (A).

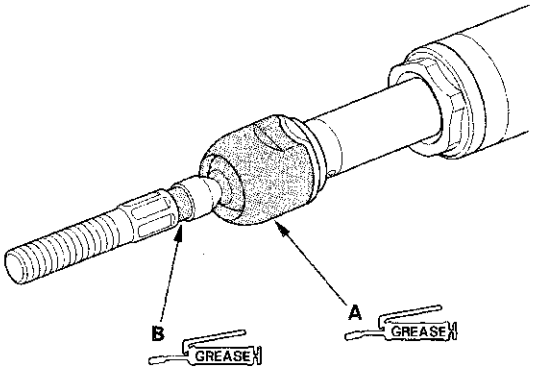

78. Apply a light coat of silicone grease (P/N 08798-9013) to the boot grooves (B) on the rack end.

    NOTE: Make sure not to get any silicone grease on the terminal part of the connectors and switches, especially if you have silicone grease on your hands or gloves.

79. Center the steering rack within its stroke.

80. Install the new self-locking nut (A) onto the pinion shaft end, and tighten to the specified torque.

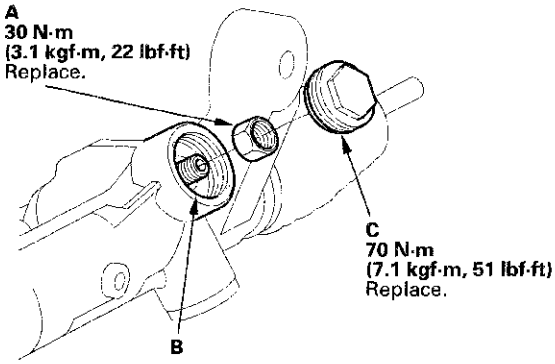

81. Remove the old sealant from the threads on the gearbox housing (B), and apply new sealant (Three Bond 1215 or Loctite 5699) all the way around the threads on the gearbox housing and the new end plug (C). Install the end plug onto the gearbox housing, and tighten it to the specified torque.

    NOTE: If more than 5 minutes has passed after applying the sealant, remove the old sealant and residue, and reapply new sealant.

82. Tighten the flange bolts (A) to the specified torque.

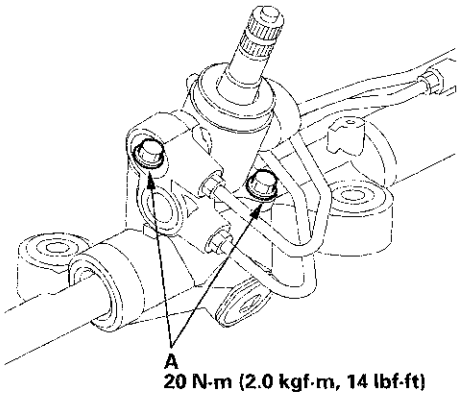

83. After tightening, use a drift to stake (A) the gearbox housing shoulder against the end plug (B).

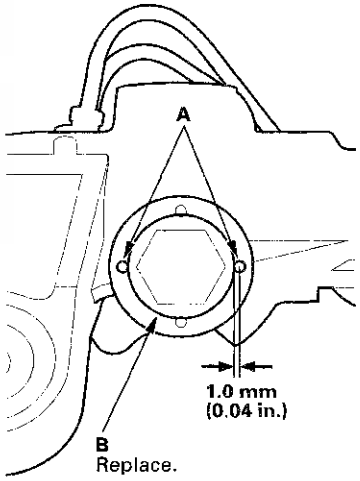

84. Clean off any grease or contamination from the boot installation grooves (A) around on the gearbox housing. Install the boots (B) on the rack ends with the tie-rod clips (C), and fit the boot end in the installation grooves in the housing properly.

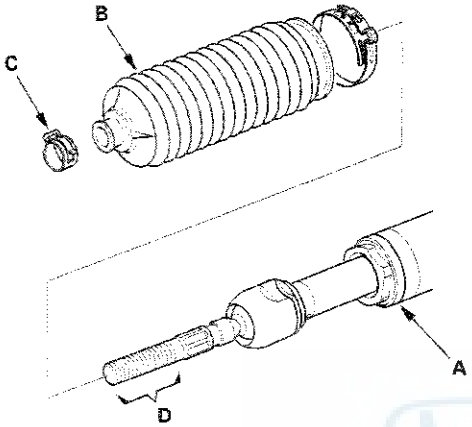

85. After installing the boots, wipe the grease off the threaded section (D) of the rack end.

86. Install the new boot bands (A) by aligning the tabs (B) with the holes (C) on the band.

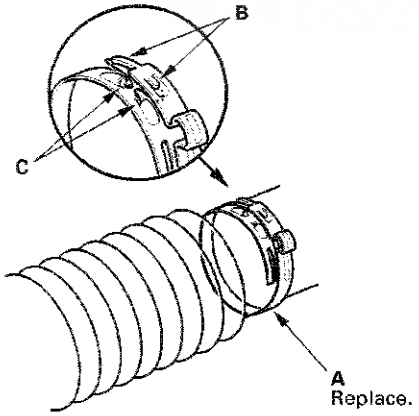

87. Close the ear portion (A) of the boot band (B) with commercially available pincers, Oetiker 1098 or equivalent (C).

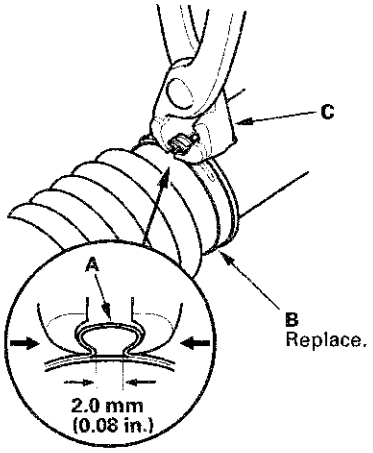

88. Slide the rack right and left to be certain that the boots are not deformed or twisted.

89. Install the tie-rod end to the rack end.

90. Install the steering gearbox (see page 17-58).

Steering Gearbox Installation

Special Tools Required
- Subframe alignment pin 070AG-SJAA10S
- Engine hanger adapter VSB02C000015 *
- Front subframe adapter VSB02C000016 *
- Engine support hanger, A and Reds AAR-T1256 *

* : These special tools are available through the Honda Tool and Equipment Program, 888-424-6857.

1. Before installing the steering gearbox, make sure that no power steering fluid is on the mating surface of the steering gearbox and the front subframe. To prevent the gearbox mounting bolts from loosening after the installation, remove any power steering fluid from the mount cushions and the bolt holes.

2. Wrap vinyl tape over the splines on the pinion shaft (A).

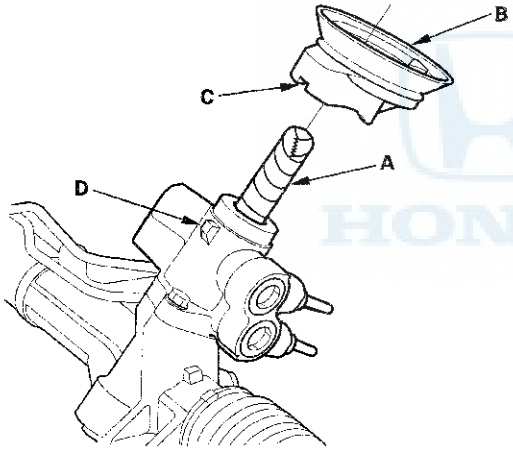

3. Install the pinion shaft grommet (B). Align the slot (C) in the pinion shaft grommet with the lug portion (D) on the valve housing. Make sure there is no gap between the grommet and the valve housing.

4. Turn the lip (A) of the pinion shaft grommet.

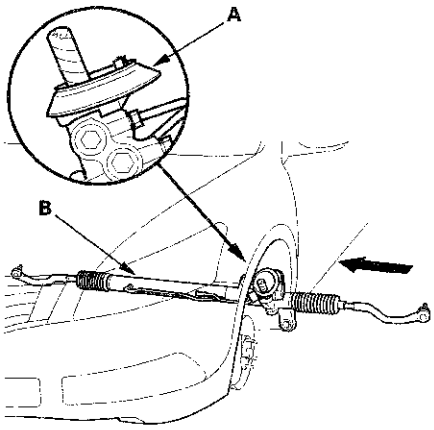

5. Slide the steering gearbox (B) between the front subframe and the body from the driver's side.

6. Carefully move the steering gearbox (A) toward the passenger's side until the pinion shaft clears the fenderwell opening on the body.

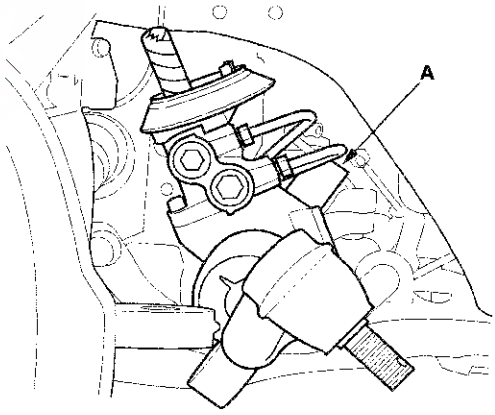

7. Continue moving the gearbox toward the passenger's side until the steering gearbox is in position.

8. Install the washers (A), the stiffener plates (B), the new mounting bolts (C), and the flange bolts (D) on the driver's side of the gearbox. Then loosely install the mounting bolts and the flange bolts.

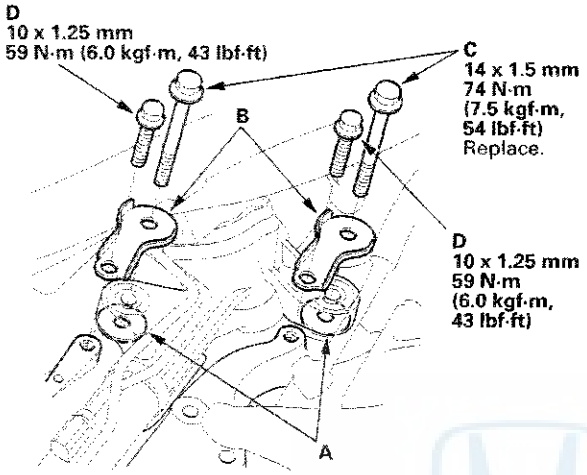

9. Position the cutout (A) on the mounting cushion (B) as shown, and install it on the passenger's side of the steering gearbox.

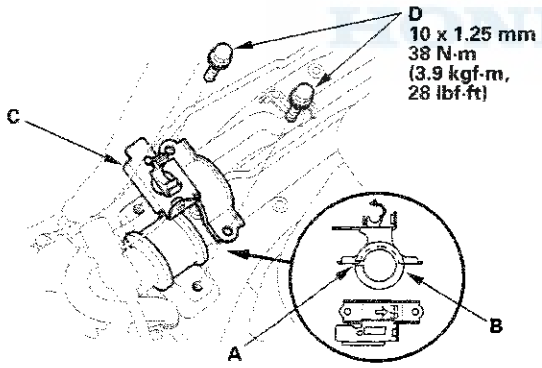

10. Install the gearbox mounting bracket (C) over the mounting cushion, and tighten the flange bolts (D) to the specified torque.

11. Tighten the flange bolts on the driver's side of the steering gearbox to the specified torque alternately in two steps.

12. Install the front subframe front stiffeners (A) and the front subframe rear stiffeners (B), then loosely install the new front subframe mounting bolts (C), new the flange bolts (D), and the flange bolts (E).

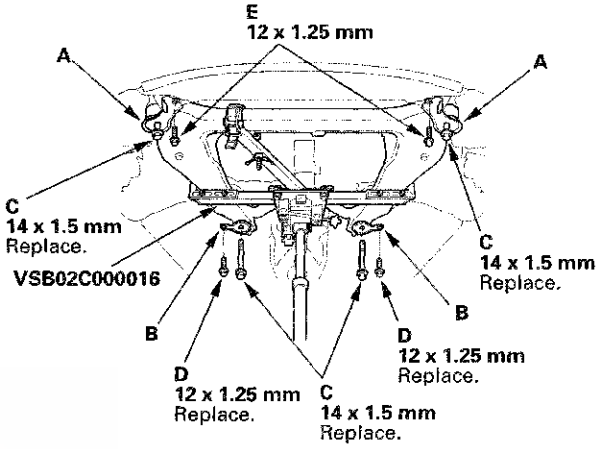

13. Align the front subframe using the 15.7 mm end of the subframe alignment pin. Vertically install the subframe alignment pin, and align the right rear corner of the front subframe and the vehicle frame holes, then loosely tighten the subframe mounting bolt (A) until the front subframe contacts the body frame.

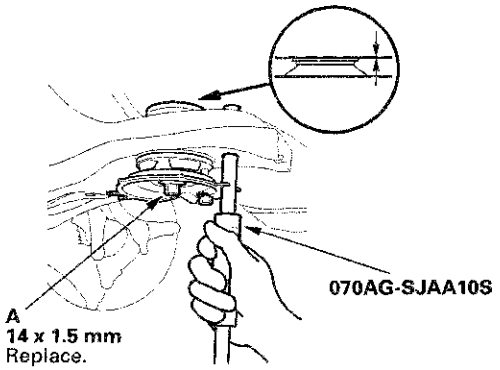

14. Loosely tighten the left rear subframe mounting bolt with the same procedure as the right rear using the subframe alignment pin.

(cont'd)

Steering Gearbox Installation (cont'd)

15. Tighten the right rear subframe mounting bolt (A) to the specified torque with the subframe alignment pin installed.

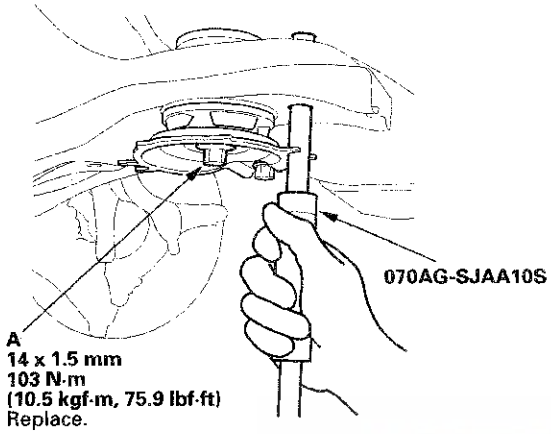

16. Tighten the left rear subframe mounting bolt to the specified torque with the subframe alignment pin installed.

17. Tighten the subframe mounting bolts (A) to the specified torque.

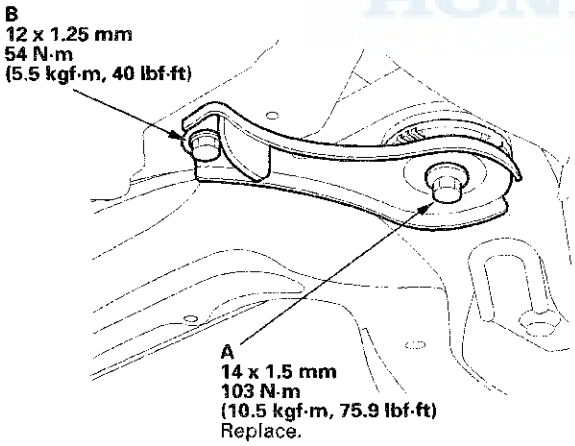

18. Tighten the flange bolts (B) to the specified torque.

19. Tighten the flange bolts (A) to the specified torque.

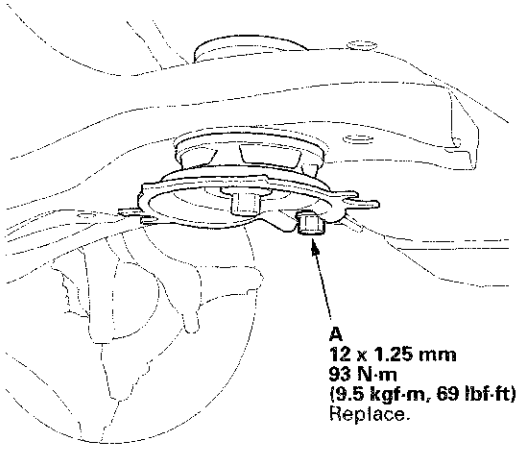

20. Install the flange nuts (A) to the lower transmission mount, and tighten them to the specified torque.

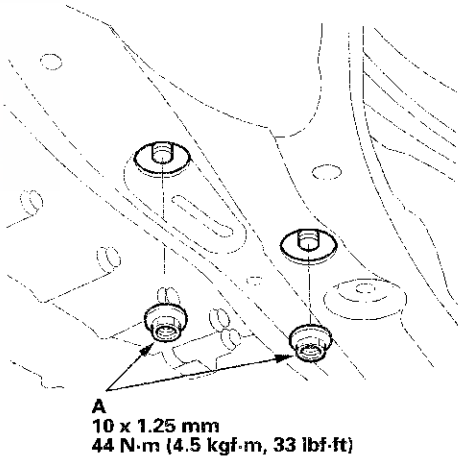

21. Install the new front subframe middle mounting bolts on the driver's side, and tighten them to the specified torque.

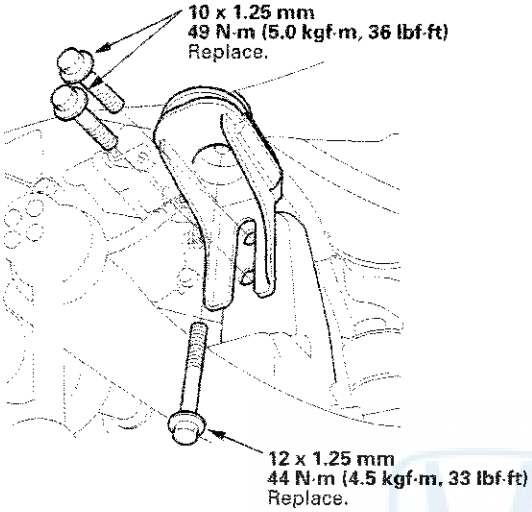

22. Install the new front subframe middle mounting bolts on the passenger's side, and tighten them to the specified torque.

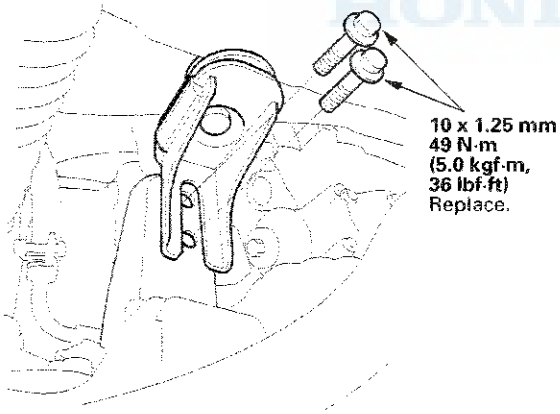

23. Lower the transmission jack supporting the front subframe.

24. A/T: Install the rear engine mount upper bracket (A) to the base bracket (B) with a new mounting bolt (C) and mounting bolts (D), and tighten them to the specified torque.

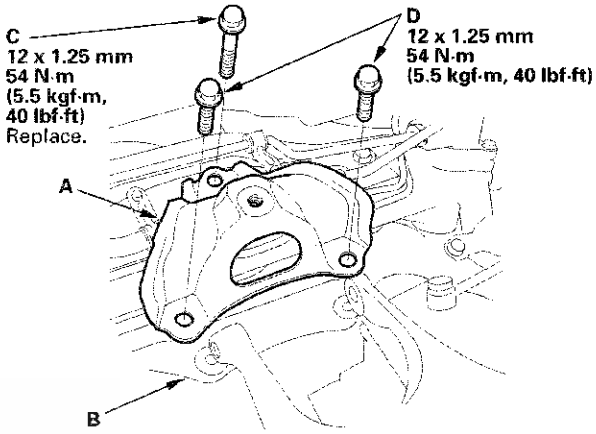

(cont'd)

Steering Gearbox Installation (cont'd)

25. Install the rear engine mount (A) with new mounting bolts, and lightly tighten them.

A/T

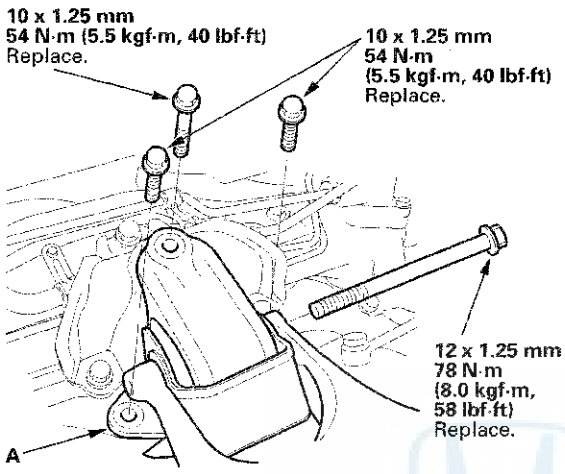

M/T

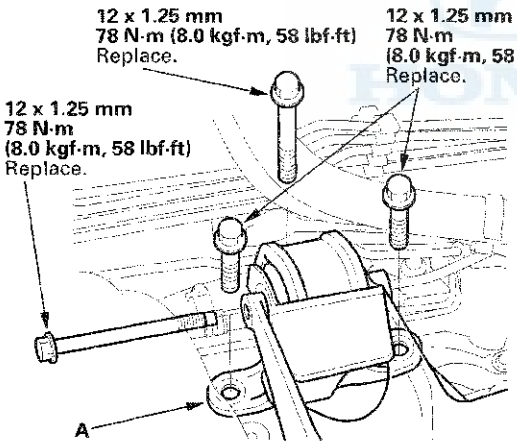

26. Remove the engine support hanger, the hanger balance bar, and the hanger adapter set.

27. Tighten the rear engine mount mounting bolts to the specified torque.

28. Install the new damper fork mounting bolt (A) and the new mounting nut (B), and loosely tighten the nut.

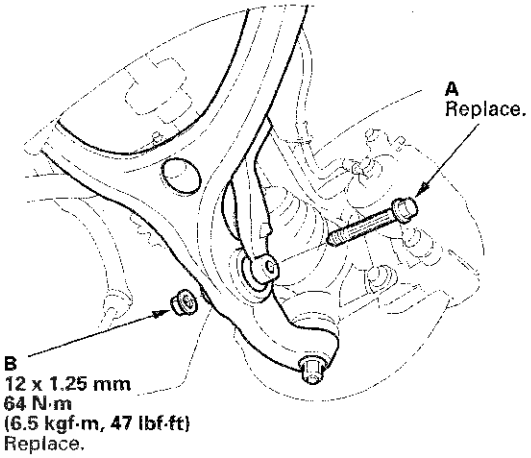

29. Install exhaust pipe A (see page 9-8).

30. Install the front splash shield (see page 20-274).

31. Lower the vehicle.

32. On both sides, wipe off any grease contamination from the ball joint tapered section and threads. Reconnect the tie-rod ball joint (A) to the knuckle. Install the nut (B), and tighten it to the specified torque.

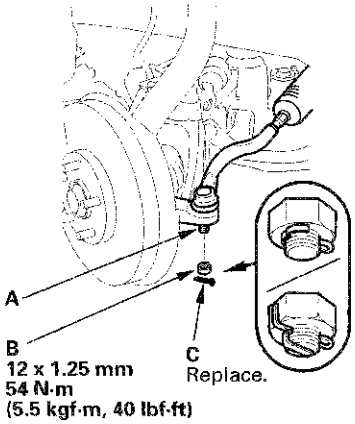

33. Install a new cotter pin (C), and bend it as shown.

34. Loosely connect the return line and inlet line to the valve housing by hand.

35. Install the return line clamp bolt (A), and tighten it to the specified torque.

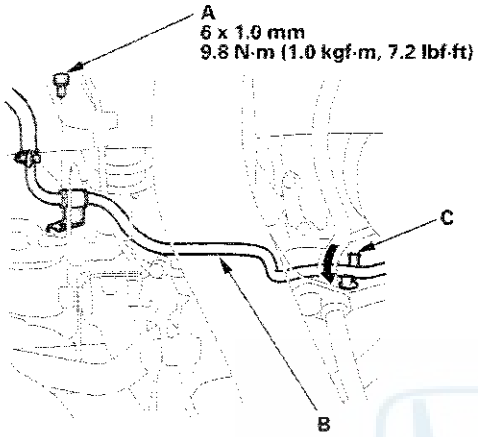

36. Install the return line (B) to the return hose clamp (C), and clamp it.

37. Install the inlet line clamp bracket bolt (A) and the return hose clamp bracket bolt (B), and tighten them to the specified torque.

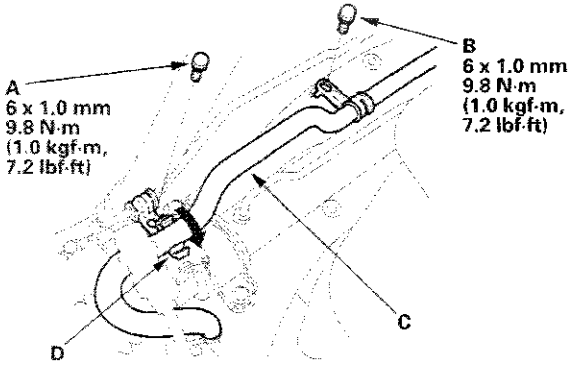

38. Install the return hose (C) to the return hose clamp (D), and clamp it.

39. Install the inlet line clamp bracket bolt (A) and the return line clamp bolt (B), and tighten them to the specified torque.

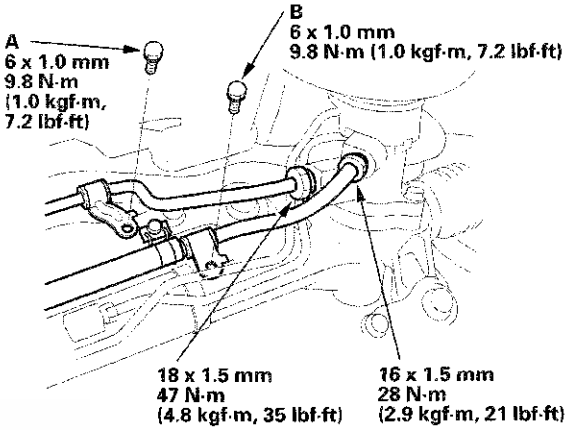

40. Tighten the flare nuts to the specified torque.

41. Install the P/S heat shield (A) with the flange bolts, and tighten them to the specified torque.

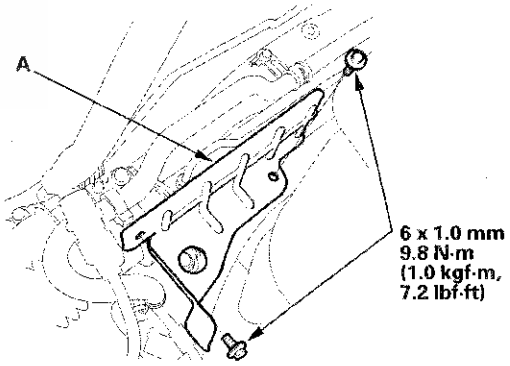

(cont'd)

Steering Gearbox Installation (cont'd)

42. Install the strut brace (see page 20-289).

43. Install the front grille cover:

    - 2-door (see page 20-257)
    - 4-door (see page 20-257)

44. Place a floor jack under the lower arm, and raise the suspension to load it with the vehicle's weight. Do not place the jack against the ball joint pin of the knuckle.

45. Tighten the damper fork mounting nut while holding the mounting bold to the specified torque (see step 28).

46. Install the front wheels, then set the wheels in the straight ahead position.

    NOTE: Before installing the wheel, clean the mating surfaces of the brake disc and the inside of the wheel.

47. Center the steering rack within its stroke.

48. Slip the lower end of the steering joint (A) onto the pinion shaft (B) taking care to align the gap (C) within the angle.

    NOTE: Pick up the tabs (D) of the pinion shaft grommet, and turn up the lip of the pinion shaft grommet securely in place. Make sure that light does not enter from the space between the pinion shaft grommet and the body.

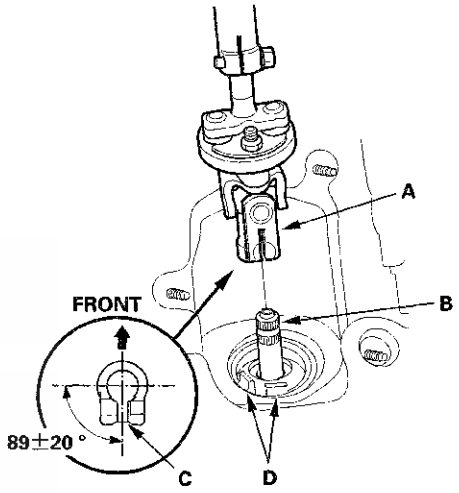

49. Align the bolt hole (A) on the steering joint with the groove (B) around the pinion shaft, then loosely install the lower steering joint bolt (C). Be sure that the joint bolt is securely in the groove in the pinion shaft.

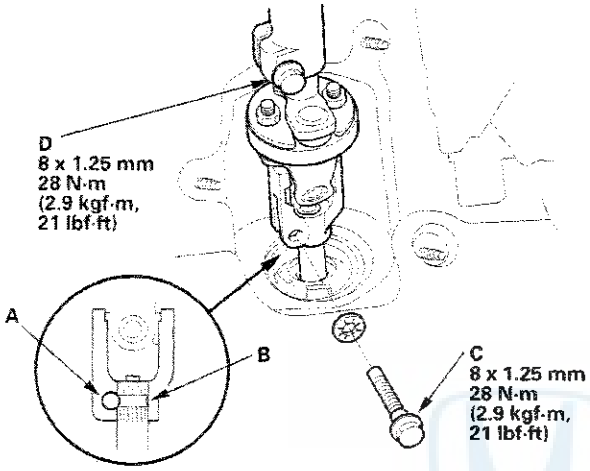

50. Pull on the steering joint to make sure that the steering joint is fully seated, then tighten the lower joint bolt to the specified torque.

51. Tighten the upper steering joint bolt (D) to the specified torque.

52. Install the steering joint cover (A).

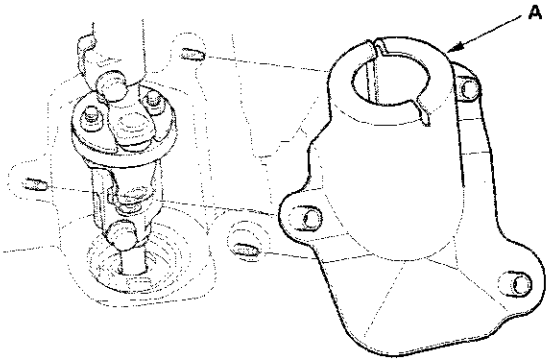

53. Install the steering wheel (see page 17-27), and the driver's airbag (see page 24-205).

54. Do the battery terminal reconnection procedure (see page 22-89), and do these tasks:

- Turn the ignition switch to ON (II) and check that the SRS indicator comes on for about 6 seconds and then goes off.
- Make sure the horn and turn signal switches work properly.
- Make sure the steering wheel switches work properly.

55. Fill the system with power steering fluid, and bleed air from the system (see page 17-14).

56. After installation, do these checks.

- Start the engine, allow it to idle, and turn the steering wheel from lock-to-lock several times to warm up the fluid. Check the gearbox for leaks (see page 17-13).
- Check the steering wheel spoke angle.
- If steering spoke angles to the right and left are not equal (steering wheel and rack are not centered), correct the engagement of the joint/pinion shaft serrations.
- Set the steering column to the center tilt position, and to the center telescopic position, then do the front toe inspection (see page 18-5).

Tie-rod Ball Joint Boot Replacement

Special Tools Required
Front hub dis/assembly tool 07965-SA50500

1. Disconnect the tie-rod ball joint from the knuckle (see step 26 on page 17-40).

2. Remove the tie-rod end from the rack end.

3. Remove the tie-rod ball joint boot from the tie-rod end, and wipe the old grease off the ball pin.

4. Pack the lower area of the ball pin (A) with fresh multipurpose grease.

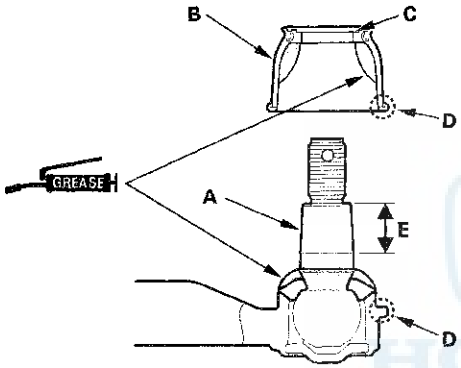

5. Pack the interior of the new tie-rod ball joint boot (B) and lip (C) with fresh multipurpose grease.

   Note these items when installing new grease:
   - Keep grease off the boot mounting area (D) and the tapered section (E) of the ball pin.
   - Do not allow dust, dirt, or other foreign materials to enter the boot.

6. Install the new tie-rod ball joint boot (A) using the front hub dis/assembly tool. The boot must not have a gap at the boot installation sections (B). After installing the boot, check the ball pin tapered section for grease contamination, and wipe it if necessary.

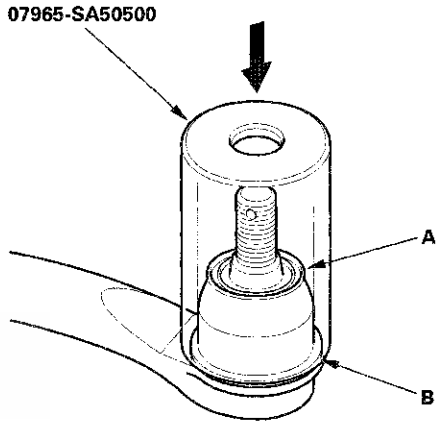

7. Install the tie-rod end to the rack end.

8. Connect the tie-rod ball joint to the knuckle (see step 32 on page 17-62).

9. Check the wheel alignment, and adjust it if necessary (see page 18-5).

Gearbox Mount Cushion Replacement

1. Remove the steering gearbox (see page 17-36).

2. Position a 40 mm socket wrench (A) on the flange part of the gearbox housing with a washer (B), a 10 x 150 mm flange bolt (C) and a 10 mm nut (D) as shown.

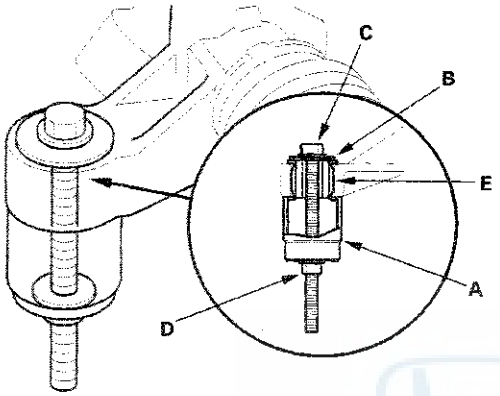

3. Hold the flange bolt with a wrench, and tighten the nut with a wrench. Remove the gearbox mount cushion (E).

4. Apply a mild soap and water solution to the new gearbox mount cushion surface (A), then place it on the gearbox mounting cushion hole.

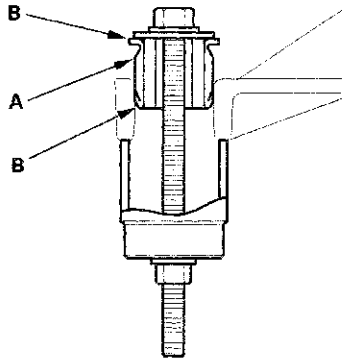

5. Position a 40 mm socket wrench on the flange part of the gearbox housing with a washer, a flange bolt, and a nut as shown.

6. Install the gearbox mount cushion by tightening the nut until the mount cushion edges (B) contact the gearbox flange surface.

7. Install the steering gearbox (see page 17-58).

HONDA

Navigation Tools: Click on the “Table of Contents” below, or use the Bookmarks to the left.

Suspension

Front and Rear Suspension

Special Tools 18-2
Component Location Index 18-3
Wheel Alignment 18-5
Wheel Bearing End Play Inspection 18-8
Wheel Runout Inspection 18-8
Wheel Bolt Replacement 18-9
Ball Joint Removal 18-11
Ball Joint Boot Inspection/Replacement 18-12

Front Suspension

Knuckle/Hub/Wheel Bearing Replacement 18-13
Upper Arm Replacement 18-19
Lower Arm Removal/Installation 18-21
Stabilizer Link Removal/Installation 18-24
Stabilizer Bar Replacement 18-25
Damper/Spring Removal and Installation 18-31
Damper/Spring Disassembly, Inspection, and Reassembly 18-34

Rear Suspension

Knuckle/Hub Bearing Unit Replacement 18-38
Upper Arm Replacement 18-42
Lower Arm A Replacement 18-45
Control Arm Replacement 18-45
Lower Arm B Replacement 18-46
Stabilizer Link Removal/Installation 18-47
Stabilizer Bar Replacement 18-48
Damper/Spring Removal and Installation 18-49
Damper/Spring Disassembly, Inspection, and Reassembly 18-52

TPMS (Tire Pressure Monitoring System) 18-55

Special Tools

Ref. No.	Tool Number	Description	Qty
①	07AAF-SDAA100	Ball Joint Thread Protector, 12 mm	1
②	07GAD-SD40101	Bearing Driver Attachment, 78 x 90 mm	1
③	07GAF-SD40100	Hub Dis/Assembly Tool	1
④	07MAC-SL0A102	Ball Joint Remover, 32 mm	1
⑤	07MAC-SL0A202	Ball Joint Remover, 28 mm	1
⑥	070AG-SJAA10S	Subframe Alignment Pin	1
⑦	070AG-SJA0300	Ball Joint Boot Clip Guide, 45 mm	1
⑧	070AF-TA0A100	Bushing Driver	1
⑨	070AF-TA0A220	Bushing Receiver Set	1
⑩	07746-0010600	Bearing Driver Attachment, 72 x 75 mm	1
⑪	07749-0010000	Driver Handle	1
⑫	07965-SD90100	Support Base	1
⑬	07974-SA50700	Ball Joint Boot Clip Guide, 39 x 41 mm	1

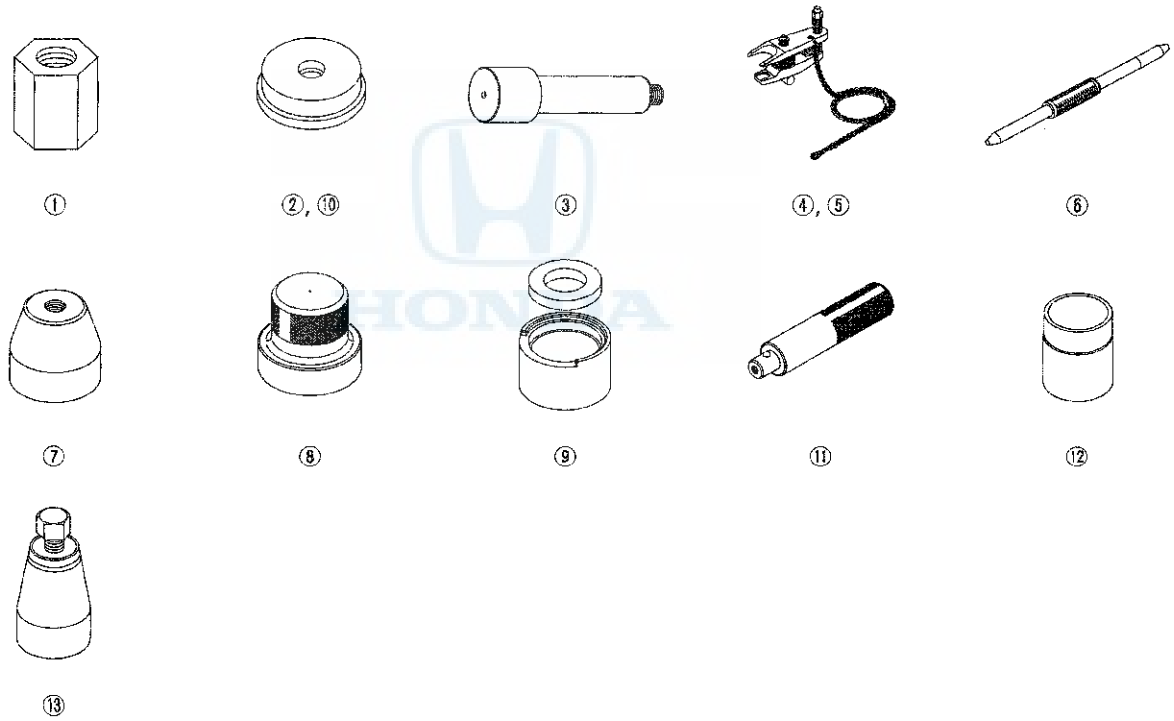

Component Location Index

Front Suspension

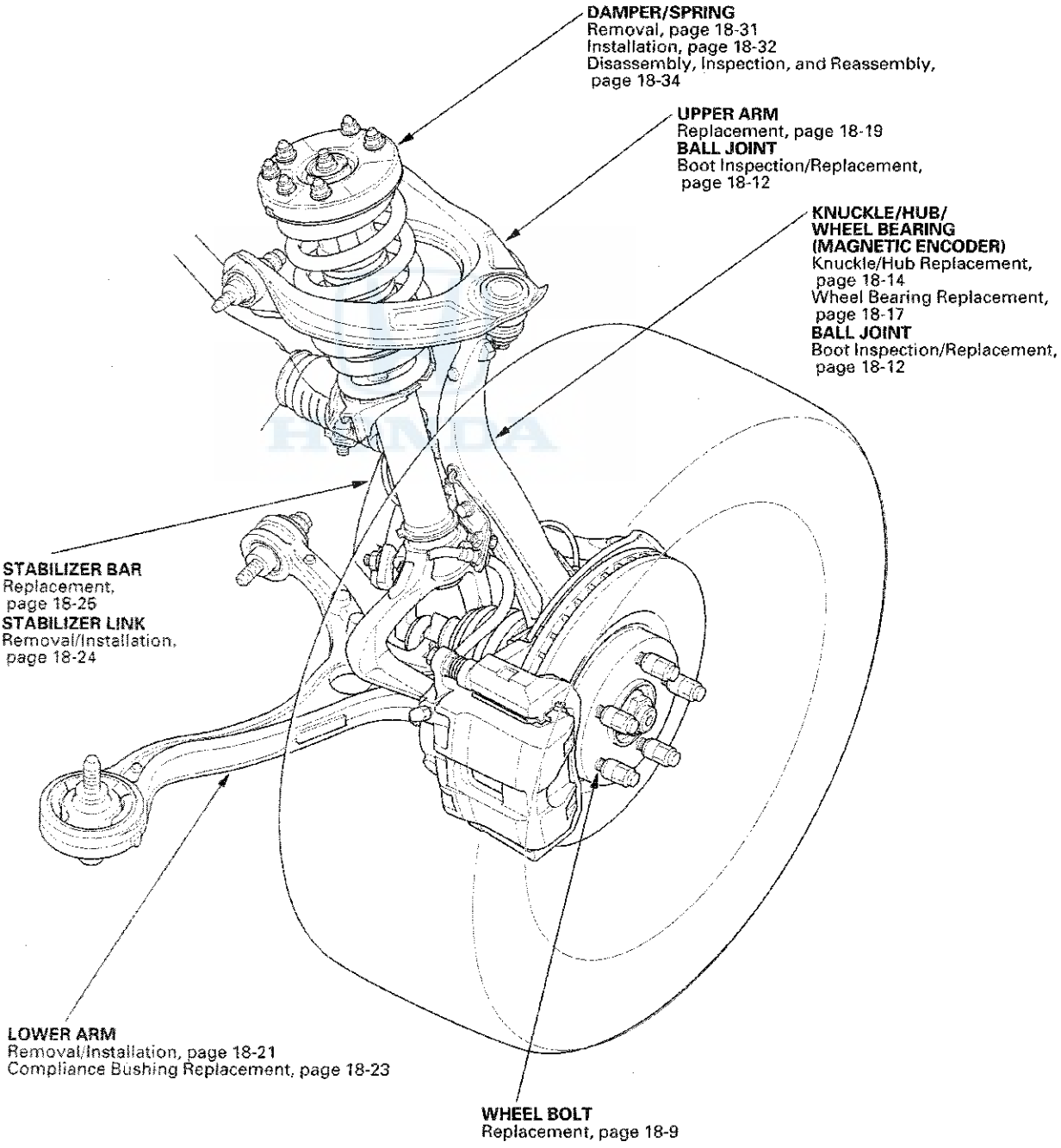

Component Location Index (cont'd)

Rear Suspension

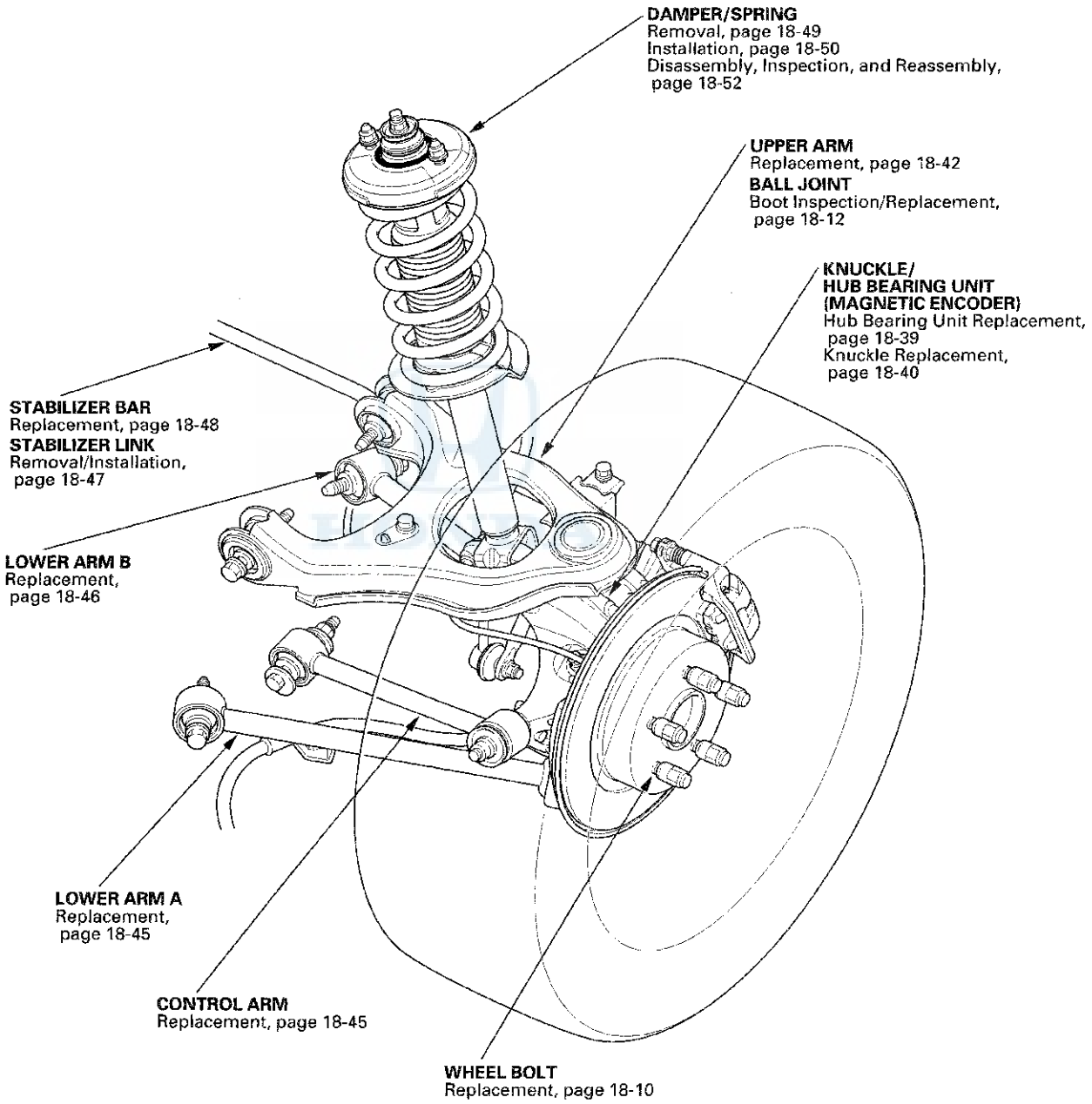

Wheel Alignment

The suspension can be adjusted for front and rear toe.

Pre-Alignment Checks

For proper inspection and adjustment of the wheel alignment, do these checks:

1. Release the parking brake to avoid an incorrect measurement.

2. Make sure the suspension is not modified.

3. Make sure the fuel tank is full, and that the spare tire, the jack, and the tools are in place on the vehicle.

4. Check the tire size and tire pressure.

   Tire size (4-door):
   LX, LX-P, LX PZEV, and LX-P PZEV models:
   Front/Rear: P215/60R16 94H
   EX, EX-L, EX PZEV, and EX-L PZEV models:
   Front/Rear: P225/50R17 93V
   Tire size (2-door):
   Front/Rear: P225/50R17 93V

   Tire pressure (4-door) (at cold):
   LX, LX-P, LX PZEV, and LX-P PZEV models:
   Front/Rear: 210 kPa (2.1 kgf/cm², 30 psi)
   EX, EX-L, EX PZEV, and EX-L PZEV models:
   Front/Rear: 220 kPa (2.2 kgf/cm², 32 psi)
   Tire pressure (2-door) (at cold):
   Front/Rear: 220 kPa (2.2 kgf/cm², 32 psi)

5. Check the runout of the wheels and tires (see page 18-8).

6. Check the suspension ball joints. (Hold a tire with your hands, and move it up and down and right and left to check for movement.)

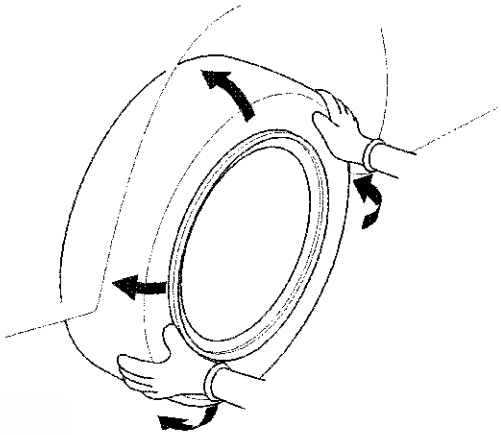

7. Before doing alignment inspections, be sure to remove all extra weight from the vehicle, and no one should be inside the vehicle (driver or passengers).

8. Bounce the vehicle up and down several times to stabilize the suspension.

9. Check that the steering column is set at the center tilt and telescopic position.

Caster Inspection

Use commercially available computerized four wheel alignment equipment to measure wheel alignment (caster, camber, toe, and turning angle). Follow the equipment manufacturer's instructions.

1. Check the caster angle.

   Caster angle:
   4-door: 3 ° 48 ′ $^{+0°25'}_{-1°05'}$
   2-door: 3 ° 47 ′ $^{+0°25'}_{-1°05'}$
   (Maximum difference between the right and left side: 0 ° 45 ′)

   - If the measurement is within specifications, measure the camber angle.
   - If the measurement is not within specifications, check for bent or damaged suspension components.

(cont'd)

Wheel Alignment (cont'd)

Camber Inspection

Use commercially available computerized four wheel alignment equipment to measure wheel alignment (caster, camber, toe, and turning angle). Follow the equipment manufacturer's instructions.

1. Check the camber angle.

   Camber angle:
   Front: 0 °00 ′$^{+30′}_{-45′}$
   Rear: −1 °00 ′$^{+30′}_{-45′}$
   (Maximum difference between the right and left side: 0 °30 ′)

   - If the measurement is within specifications, measure the toe-in.
   - If the measurement is not within specifications, check for bent or damaged suspension components.

Front Toe Inspection/Adjustment

Use commercially available computerized four wheel alignment equipment to measure wheel alignment (caster, camber, toe, and turning angle). Follow the equipment manufacturer's instructions.

1. Set the steering column to the middle tilt and telescopic positions. Center the steering wheel spokes, and install a steering wheel holder tool.

2. Check the toe with the wheels pointed straight ahead.

   Front toe-in: 0±2 mm (0±0.08 in.)

   - If adjustment is required, go to step 3.
   - If no adjustment is required, go to rear toe inspection/adjustment.

3. Loosen the tie-rod locknuts (A) while holding the flat surface sections (B) of the tie-rod end with a wrench, and turn both tie-rods (C) until the front toe is within specifications.

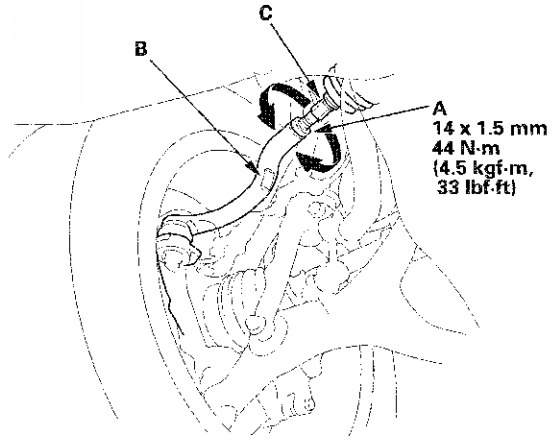

4. After adjusting, tighten the tie-rod locknuts to the specified torque value. Reposition the rack-end boot if it is twisted or displaced.

5. Go to rear toe inspection/adjustment.

Rear Toe Inspection/Adjustment

Use commercially available computerized four wheel alignment equipment to measure wheel alignment (caster, camber, toe, and turning angle). Follow the equipment manufacturer's instructions.

1. Release the parking brake to avoid an incorrect measurement.

2. Check the toe.

   Rear toe-in: 2±2 mm (0.08±0.08 in.)

   - If adjustment is required, go to step 3.
   - If no adjustment is required, go to turning angle inspection.

3. Hold the adjusting bolt (A) on the rear control arm (B), and loosen the self-locking nut (C).

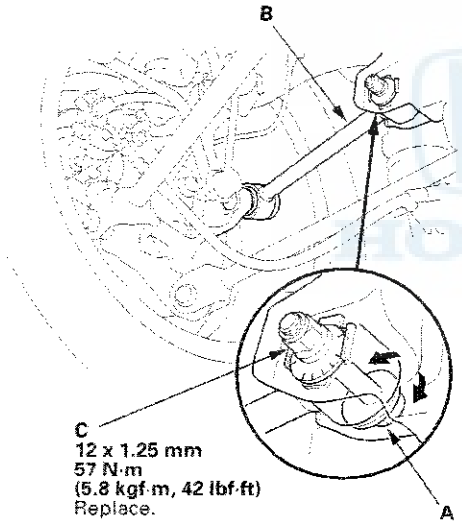

4. Replace the self-locking nut with a new one, and lightly tighten it.

   NOTE: Always use a new self-locking nut whenever it has been tightened to the specified torque.

5. Adjust the rear toe by turning the adjusting bolt until the toe is correct.

6. Tighten the self-locking nut while holding the adjusting bolt to the specified torque value.

Turning Angle Inspection

Use commercially available computerized four wheel alignment equipment to measure wheel alignment (caster, camber, toe, and turning angle). Follow the equipment manufacturer's instructions.

1. Turn the wheel right and left while applying the brake, and measure the turning angle of both wheels.

   Turning angle:

Inward:	**39 °00 ′±2 °**
Outward (reference):	**31 °50 ′**

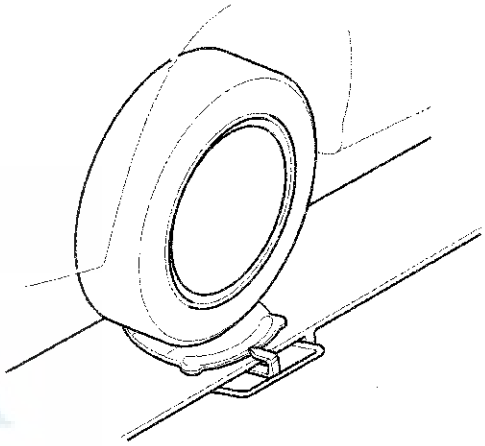

2. If the measurement is not within the specifications, even up both sides of the tie-rod threaded section length while adjusting the front toe. If it is correct, but the turning angle is not within the specifications, check for bent or damaged suspension components.

Wheel Bearing End Play Inspection

1. Raise the vehicle, and support it with safety stands in the proper locations (see page 1-11).

2. Remove the wheels.

3. Install suitable flat washers (A) and the wheel nuts. Tighten the nuts to the specified torque to hold the brake disc securely against the hub.

Front

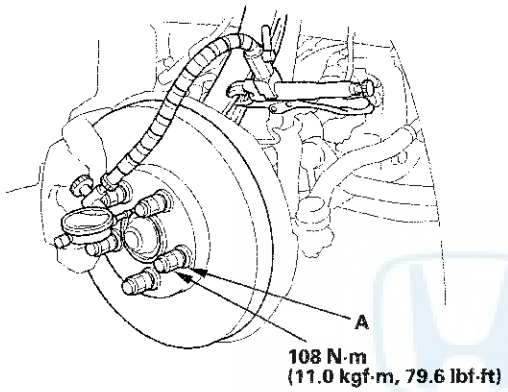

Rear

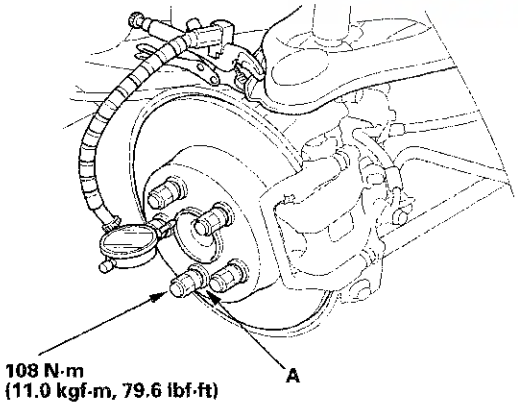

4. Attach the dial gauge. Place the dial gauge against the hub flange.

5. Measure the bearing end play while moving the brake disc inward and outward.

   Wheel bearing end play:
   Front/Rear: 0—0.05 mm (0—0.002 in.)

6. If the bearing end play measurement is more than the standard, replace the wheel bearing or the hub bearing unit.

Wheel Runout Inspection

1. Raise the vehicle, and support it with safety stands in the proper locations (see page 1-11).

2. Check for a bent or deformed wheel.

3. Set up the dial gauge as shown, and measure the axial runout by turning the wheel.

   Front and rear wheel axial runout:
   Standard:
   Steel wheel: 0—1.0 mm (0—0.04 in.)
   Aluminum wheel: 0—0.7 mm (0—0.03 in.)
   Service limit: 2.0 mm (0.08 in.)

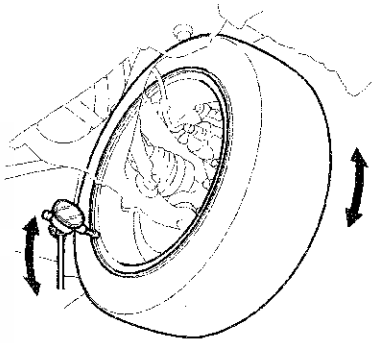

4. Reset the dial gauge to the position shown, and measure the radial runout.

   Front and rear wheel radial runout:
   Standard:
   Steel wheel: 0—1.0 mm (0—0.04 in.)
   Aluminum wheel: 0—0.7 mm (0—0.03 in.)
   Service limit: 1.5 mm (0.06 in.)

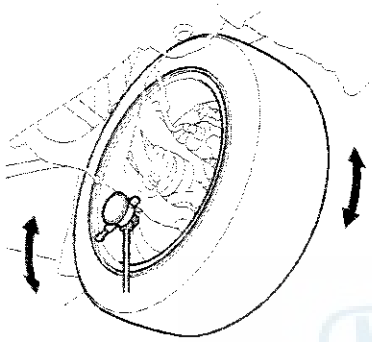

5. If the wheel runout is not within the specification, check the wheel bearing end play (see page 18-8), and make sure the mating surfaces on the brake disc and the inside of the wheel are clean.

6. If the bearing end play is within the specification but the wheel runout is more than the service limit, replace the wheel.

Wheel Bolt Replacement

Special Tools Required
Ball joint remover, 28 mm 07MAC-SL0A202

NOTICE
- Do not use a hammer or impact tools (pneumatic or electric) to remove and install the wheel bolts.
- Be careful not to damage the threads of the wheel bolts.

Front

1. Remove the front hub (see page 18-14).

2. Separate the wheel bolt (A) from the hub (B) using a hydraulic press. Support the hub with hydraulic press attachments (C) or equivalent tools.

   NOTE: Before installing the new wheel bolt, clean the mating surfaces on the bolt and the hub.

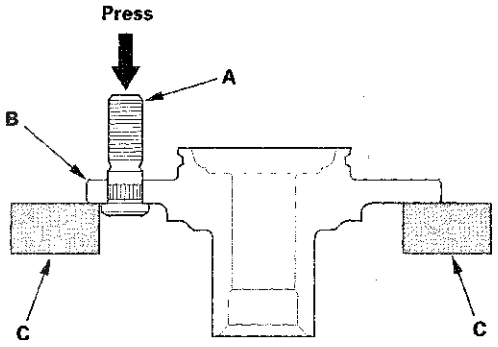

3. Insert the new wheel bolt into the hub while aligning the splined surfaces on the hub hole with the wheel bolt.

   NOTE:
   - Degrease all around the wheel bolt.
   - Make sure the wheel bolt is installed vertically in relation to the hub disc surface.

4. Install the wheel bolt using a hydraulic press until the wheel bolt shoulder is fully seated.

5. Install the front hub (see page 18-14).

   NOTE: If you cannot tighten the wheel nut to the specified torque value when installing the wheel, replace the front hub as an assembly.

(cont'd)

Wheel Bolt Replacement (cont'd)

Rear

1. Raise the vehicle, and support it with safety stands in the proper locations (see page 1-11).

2. Remove the rear brake disc (see page 19-34).

3. Separate the wheel bolt (A) from the hub (B) using the ball joint remover (C), and keep the jaw (D) of ball joint remover vertical against the wheel bolt (see page 18-11).

   NOTE:
   - If the angle of the remover against the wheel bolt is not square, readjust the ball joint remover by turning the head (E) of the adjusting bolt (F).
   - Before installing the new wheel bolt, clean the mating surfaces on the bolt and the hub.

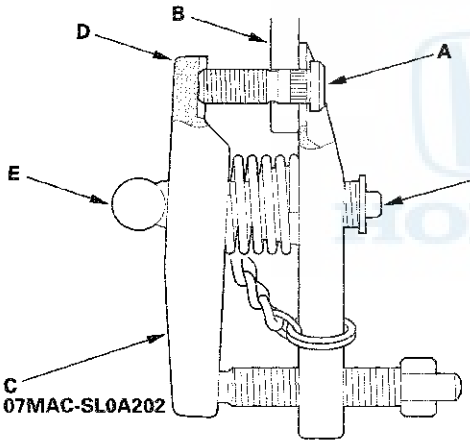

4. Insert the new wheel bolt (A) into the hub (B) while aligning the splined surfaces (C) on the hub hole with the wheel bolt. Adjust the measurement (D) with the washers (P/N 94101-12800 or equivalent) (E), then install a nut (P/N 90304-SC2-000 or equivalent) (F) hand-tight.

   NOTE:
   - Degrease all around the wheel bolt and the threaded section of the nut.
   - Make sure the wheel bolt is installed vertically in relation to the hub disc surface.
   - Do not install the nut and washers that have been used as tools on a vehicle.

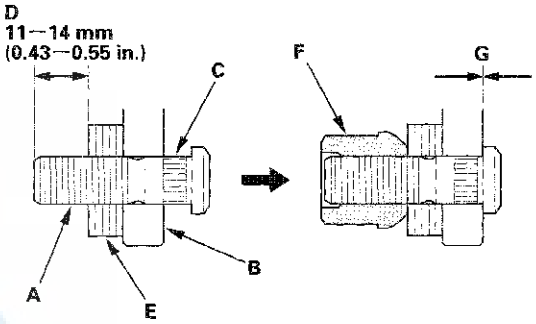

5. Tighten the nut until the wheel bolt is drawn fully into the hub. Do not exceed the maximum torque limit. Make sure there is no gap (G) between the bolt and the hub.

   Limited torque:
   108 N·m (11.0 kgf·m, 79.6 lbf·ft) max.

6. Install the rear brake disc (see page 19-34).

   NOTE:
   - If you cannot tighten the wheel nut to the specified torque value when installing the wheel, replace the rear hub bearing unit as an assembly.
   - Before installing the wheel, clean the mating surfaces of the brake disc and the inside of the wheel.

Ball Joint Removal

Special Tools Required
- Ball joint thread protector, 12 mm 07AAF-SDAA100
- Ball joint remover, 32 mm 07MAC-SL0A102
- Ball joint remover, 28 mm 07MAC-SL0A202

NOTICE

Always use a ball joint remover to disconnect a ball joint. Do not strike the housing or any other part of the ball joint connection to disconnect it.

1. Install a hex nut (A) or the ball joint thread protector (B) onto the threads of the ball joint (C).

   NOTE: Using a hex nut, make sure the nut is flush with the ball joint pin end to prevent damage to the threaded end of the ball joint pin.

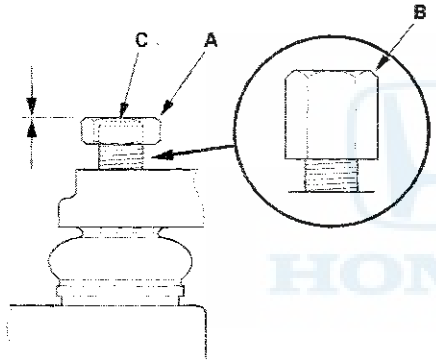

2. Apply grease to the ball joint remover on the areas shown (A). This will ease installation of the tool and prevent damage to the pressure bolt (B) threads.

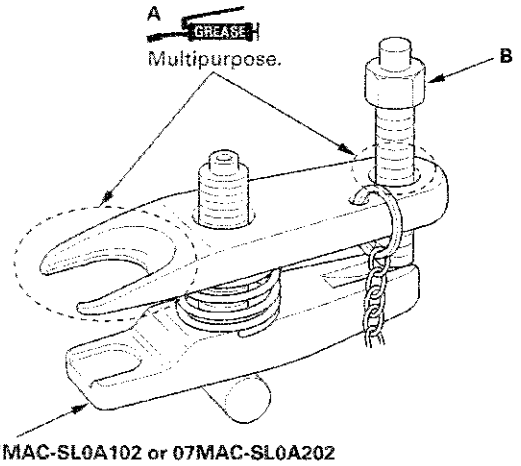

3. Loosen the pressure bolt (A), and install the ball joint remover as shown. Insert the jaws carefully, making sure not to damage the ball joint boot. Adjust the jaw spacing by turning the adjusting bolt (B).

   NOTE: Fasten the safety chain (C) securely to a suspension arm or the subframe (D). Do not fasten it to a brake line or wire harness.

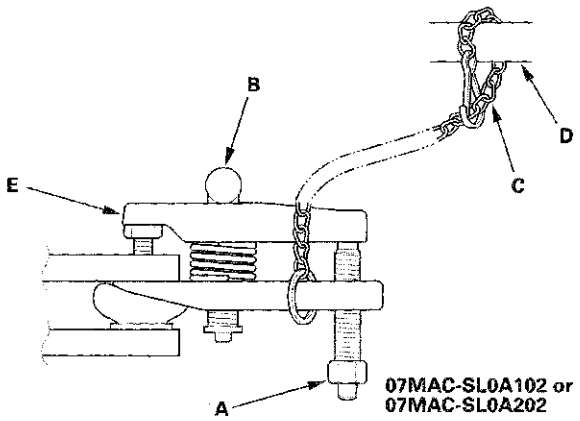

4. After adjusting the adjusting bolt, make sure the head of the adjusting bolt is in the position shown to allow the jaw (E) to pivot.

5. With a wrench, tighten the pressure bolt until the ball joint pin pops loose from the ball joint connecting hole. If necessary, apply penetrating type lubricant to loosen the ball joint pin.

   NOTE: Do not use pneumatic or electric tools on the pressure bolt.

6. Remove the ball joint remover, then remove the nut from the end of the ball joint pin, and pull the ball joint out of the ball joint connecting hole. Inspect the ball joint boot, and replace it if damaged.

Ball Joint Boot Inspection/Replacement

Special Tools Required
- Ball joint boot clip guide, 45 mm 070AG-SJA0300
- Ball joint boot clip guide, 39 x 41 mm 07974-SA50700

1. Check the ball joint boot for weakness, damage, cracks, and grease leaks.

   NOTE:
   - If the ball joint boot is damaged with grease leaks, replace the appropriate part as an assembly.
   - If the ball joint boot is soft and cracked without grease leaks, go to step 2. Replace the appropriate ball joint boot.

2. Disconnect the appropriate ball joint connection, and remove the component including the ball joint:

   - The front knuckle (see page 18-14)
   - The front upper arm (see page 18-19)
   - The rear upper arm (see page 18-42)

3. Remove the boot clip and the boot.

4. Pack the interior and lip (A) of a new boot with grease. Keep the grease off of the boot-to-housing mating surfaces (B).

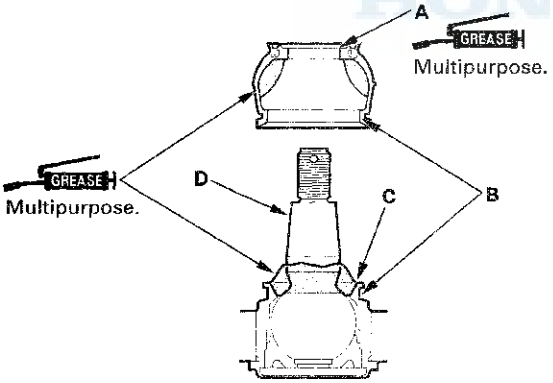

5. Pack fresh grease into the base (C). Do not let dirt or other foreign materials get into the boot.

6. Install the boot on the ball joint, then squeeze it gently to force out any air, then wipe the grease off the tapered portion of the ball joint pin (D).

7. The front knuckle ball joint or the rear upper arm ball joint: Adjust the depth by turning the ball joint boot clip guide (A) until its base is just above the groove around (B) the bottom of the boot. Then slide the clip (C) over the ball joint boot clip guide and into position on the boot.

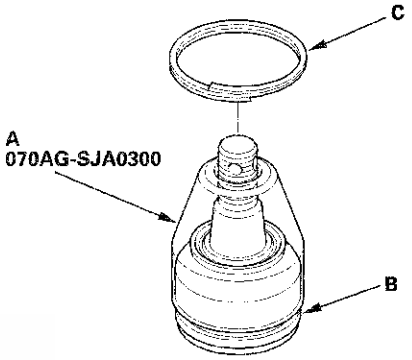

8. The front upper arm ball joint: Adjust the ball joint boot clip guide with the adjusting bolt (A) until its base is just above the groove around (B) the bottom of the boot. Then slide the clip (C) over the ball joint boot clip guide and into position on the boot.

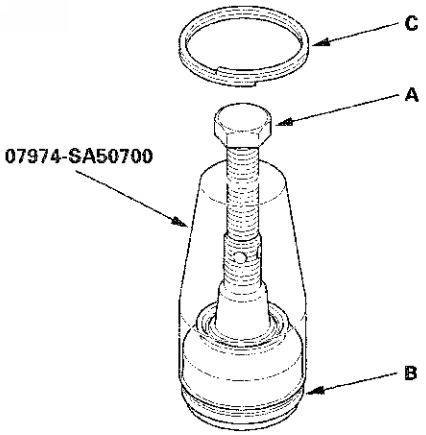

9. After installing a boot, wipe any grease off the exposed portion of the ball joint pin.

10. Install all the removed parts.

Knuckle/Hub/Wheel Bearing Replacement

Exploded View

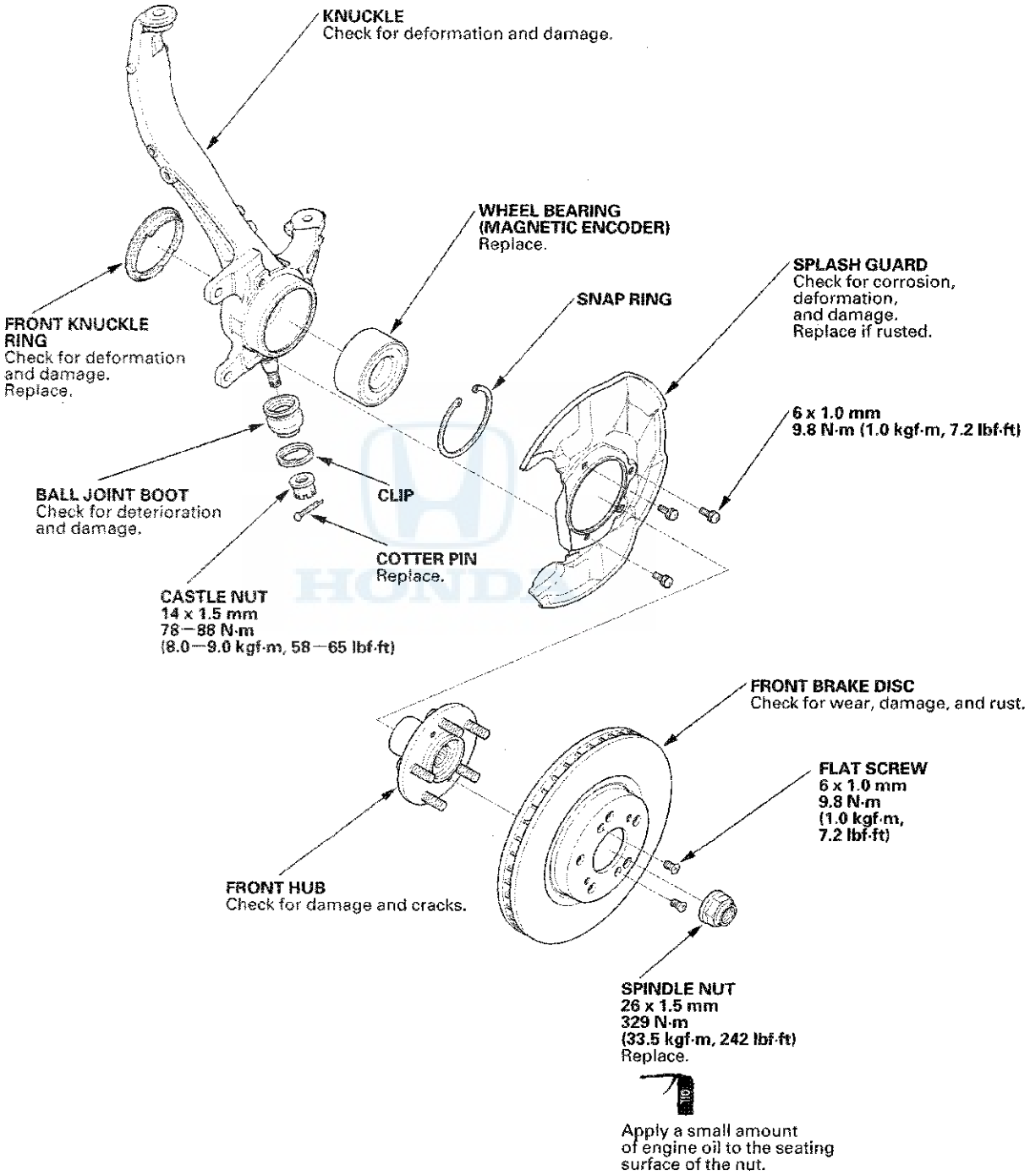

(cont'd)

Knuckle/Hub/Wheel Bearing Replacement (cont'd)

Special Tools Required
- Ball joint remover, 28 mm 07MAC-SL0A202
- Hub dis/assembly tool 07GAF-SD40100
- Bearing driver attachment, 72 x 75 mm 07746-0010600
- Driver handle 07749-0010000
- Bearing driver attachment, 78 x 90 mm 07GAD-SD40101
- Support base 07965-SD90100

Knuckle/Hub Replacement

1. Raise the front of the vehicle, and support it with safety stands in the proper locations (see page 1-11).

2. Remove the wheel nuts and the front wheel.

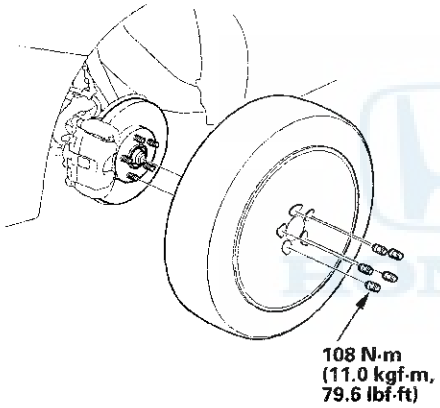

3. Remove the brake hose bracket mounting bolt (A).

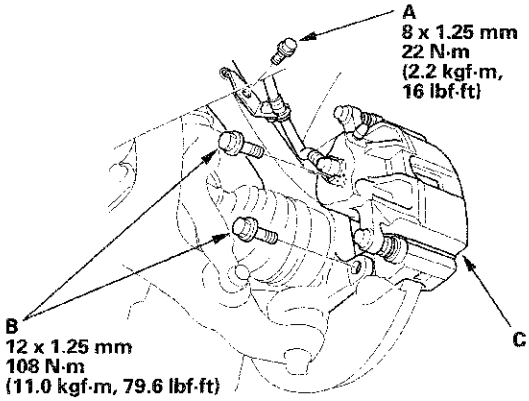

4. Remove the brake caliper bracket mounting bolts (B), then remove the caliper assembly (C) from the knuckle. To prevent damage to the caliper assembly or the brake hose, use a short piece of wire to hang the caliper assembly from the undercarriage. Do not twist the brake hose excessively.

5. Remove the wheel speed sensor harness bracket (A) and the wheel speed sensor (B) from the knuckle. Do not disconnect the wheel speed sensor connector.

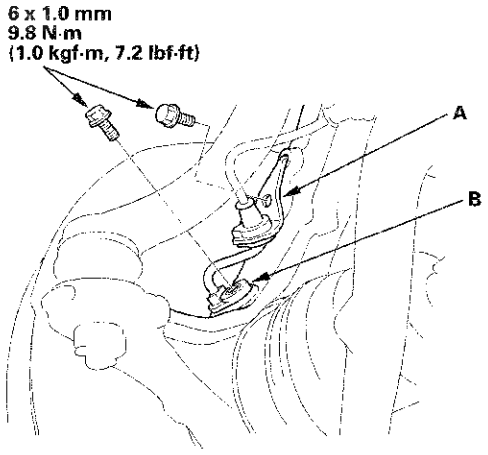

6. Raise the stake (A), then remove the spindle nut (B).

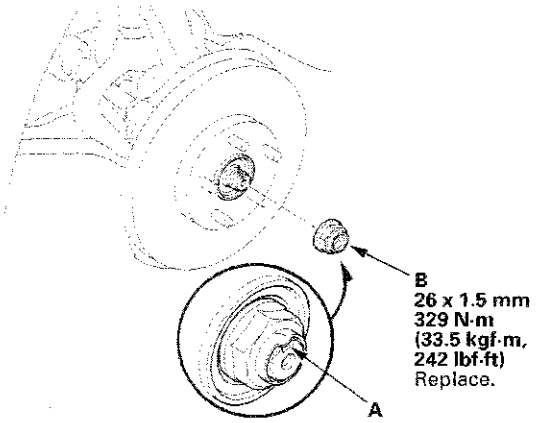

7. Remove the front brake disc (see page 19-22).

8. Check the front hub for damage and cracks.

9. Remove the cotter pin (A) from the tie-rod end ball joint, then remove the nut (B).

   NOTE: During installation, install the new cotter pin after tightening the nut, and bend its end as shown.

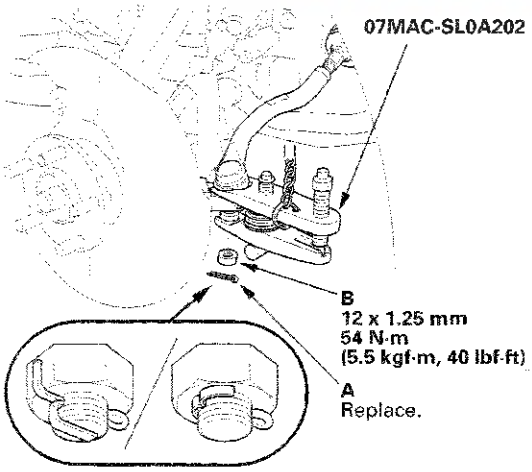

10. Disconnect the tie-rod end ball joint from the knuckle using the ball joint thread protector and the ball joint remover (see page 18-11).

11. Remove the cotter pin (A) from the knuckle ball joint, then remove the castle nut (B).

    NOTE: During installation, insert the new cotter pin into the ball joint pin hole from the front to the rear of the vehicle, and bend its end as shown. Check the ball joint pin hole direction before connecting the ball joint.

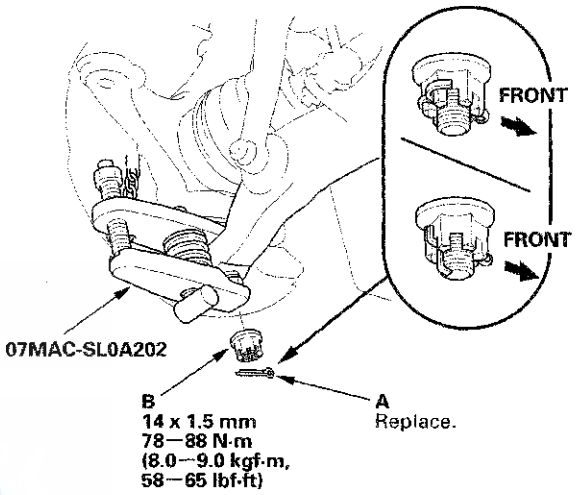

12. Disconnect the knuckle ball joint from the lower arm using the ball joint remover (see page 18-11).

    NOTE:
    - Be careful not to damage the ball joint boot when installing the remover.
    - Do not force or hammer on the lower arm, or pry between the lower arm and the knuckle. You could damage the ball joint.

(cont'd)

Knuckle/Hub/Wheel Bearing Replacement (cont'd)

13. Remove the cotter pin (A) from the upper arm ball joint, then remove the castle nut (B).

    NOTE: During installation, insert the new cotter pin into the ball joint pin hole from the front to the rear of the vehicle, and bend its end as shown. Check the ball joint pin hole direction before connecting the ball joint.

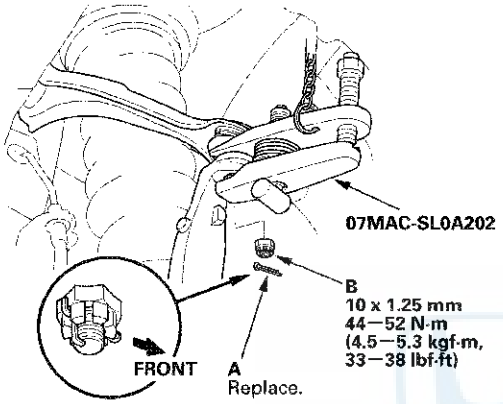

14. Disconnect the upper arm ball joint from the knuckle using the ball joint remover (see page 18-11).

15. Remove the driveshaft outboard joint (A) from the knuckle (B) by tapping the driveshaft end (C) with a soft face hammer while drawing the hub outward, then remove the knuckle/hub.

    NOTE:
    - Do not pull the driveshaft end outward. The driveshaft inboard joint may come apart.
    - During installation, apply grease to the mating surfaces of the wheel bearing and the driveshaft outboard joint (see step 1 on page 16-20).

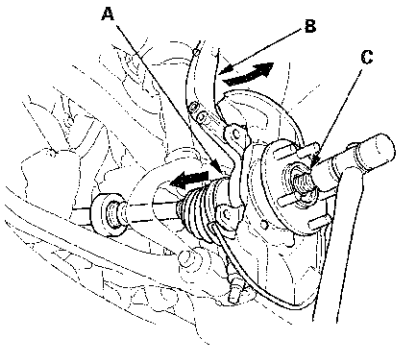

16. Install the knuckle/hub in the reverse order of removal, and note these items:

    - First install all of the components, and lightly tighten the bolts and the nuts, then raise the suspension to load it with the vehicle's weight before fully tightening to the specified torque values. Do not place the jack against the ball joint pin of the knuckle.
    - Be careful not to damage the ball joint boot when connecting the knuckle.
    - Before connecting the ball joint, degrease the threaded section and the tapered portion of the ball joint pin, the ball joint connecting hole, and the threaded section and the mating surfaces of the castle nut.
    - Torque the castle nut to the lower torque specification, then tighten it only far enough to align the slot with the ball joint pin hole. Do not align the castle nut by loosening it.
    - Use a new spindle nut on reassembly.
    - Before installing the spindle nut, apply a small amount of engine oil to the seating surface of the nut. After tightening, use a drift to stake the spindle nut shoulder against the driveshaft.
    - Before installing the brake disc, clean the mating surfaces of the front hub and the inside of the brake disc.
    - Before installing the wheel, clean the mating surfaces of the brake disc and the inside of the wheel.

17. Check the wheel alignment, and adjust it if necessary (see page 18-5).

Wheel Bearing Replacement

1. Separate the hub (A) from the knuckle (B) using the hub dis/assembly tool and a hydraulic press. Hold the knuckle with the attachment (C) of the hydraulic press or equivalent tool. Be careful not to damage or deform the splash guard (D). Hold onto the hub to keep it from falling when pressed clear.

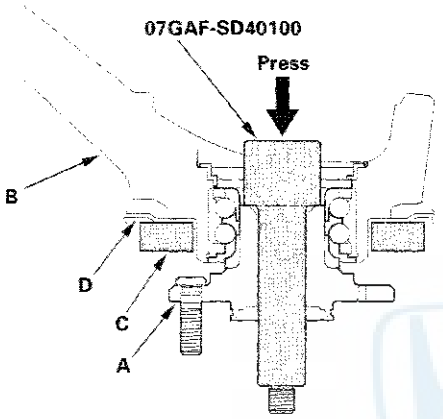

2. Press the wheel bearing inner race (A) off of the hub (B) using the hub dis/assembly tool, a commercially available bearing separator (C), and a press.

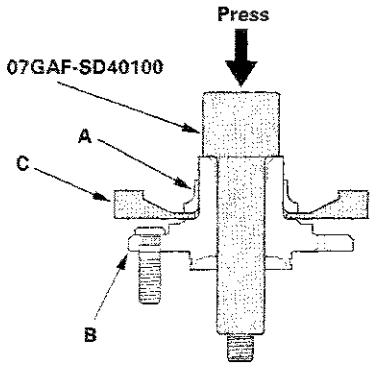

3. Remove the snap ring (A) and the splash guard (B) from the knuckle (C).

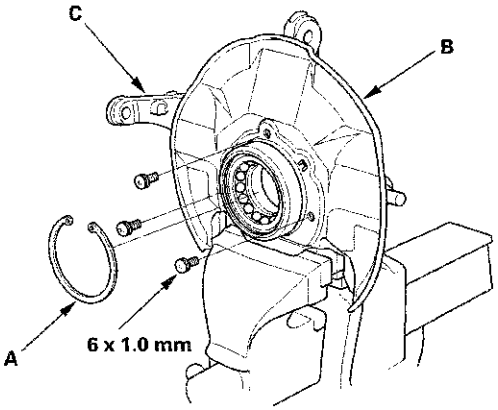

4. Press the wheel bearing (A) out of the knuckle (B) using the bearing driver attachment, the driver handle, and a press.

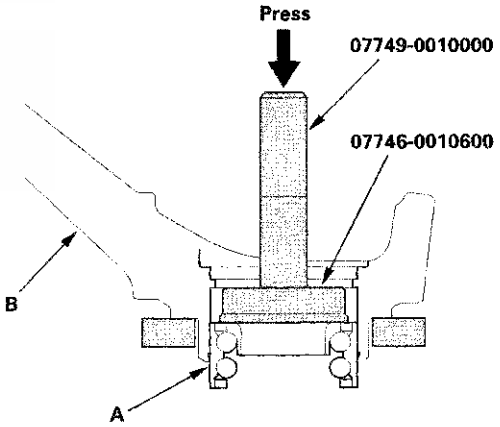

5. Wash the knuckle and the hub thoroughly in high flash point solvent before reassembly.

(cont'd)

Knuckle/Hub/Wheel Bearing Replacement (cont'd)

6. Press a new wheel bearing (A) into the knuckle (B) using the old bearing (C), a steel plate (D), the bearing driver attachment, the support base, and a press.

   NOTE:
   - Install the wheel bearing with the wheel speed sensor magnetic encoder (E) (brown color), toward the inside of the knuckle.
   - Remove any oil, grease, dust, metal debris, and other foreign material from the encoder surface.
   - Keep any magnetic tools away from the encoder surface.
   - Be careful not to damage the encoder surface when you insert the wheel bearing.

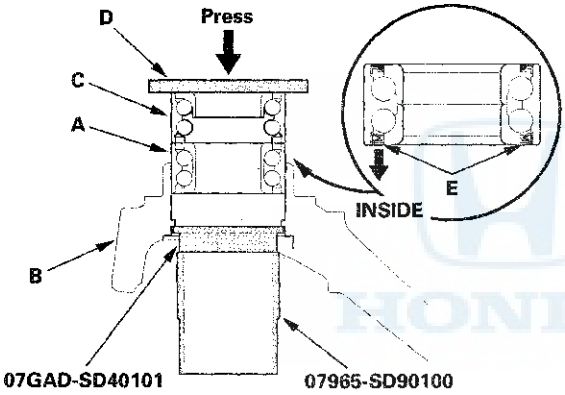

7. Check the front knuckle ring (A) for damage or deformation, and replace it if necessary.

   NOTE: When installing the new front knuckle ring, position the knuckle ring notch portion (B) toward cut out (C) near the ball joint in the knuckle, and align the center of the knuckle ring ledge portion (D) with the center of the wheel sensor hole (E) on the knuckle as shown.

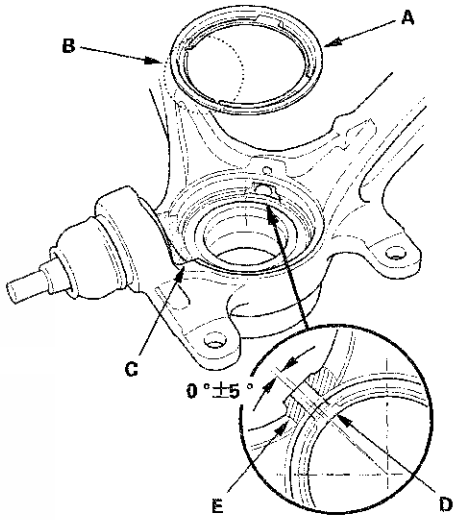

8. Install the snap ring (A) securely in the knuckle (B).

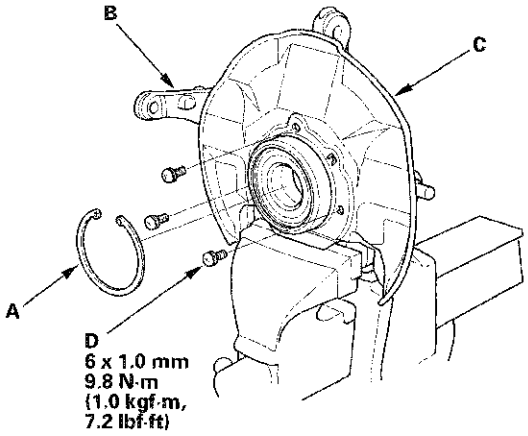

9. Install the splash guard (C), and tighten the screws (D) to the specified torque value.

10. Install the hub (A) onto the knuckle (B) using the bearing driver attachment, the driver handle, the support base, and a hydraulic press. Be careful not to damage the splash guard (C).

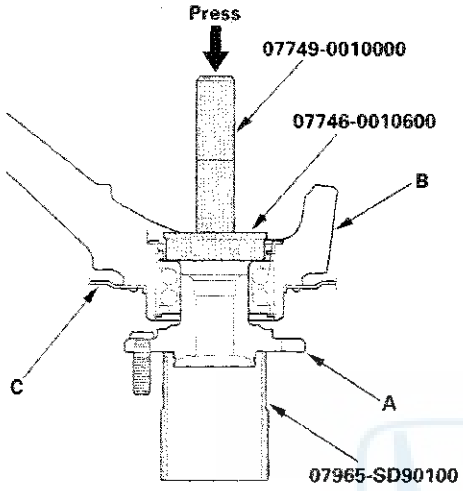

Upper Arm Replacement

Special Tools Required
Ball joint remover, 28 mm 07MAC-SL0A202

1. Raise the front of the vehicle, and support it with safety stands in the proper locations (see page 1-11).

2. Remove the front wheel.

3. Remove the front damper/spring (see page 18-31).

4. Remove the cotter pin (A) from the upper arm ball joint, then remove the castle nut (B).

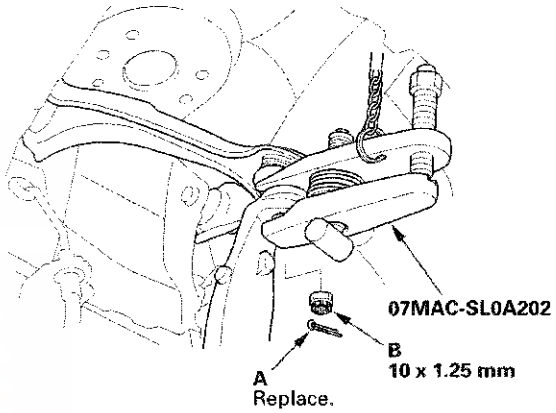

5. Disconnect the upper arm ball joint from the knuckle using the ball joint remover (see page 18-11).

6. Remove the upper arm mounting bolts (A), then remove the upper arm (B).

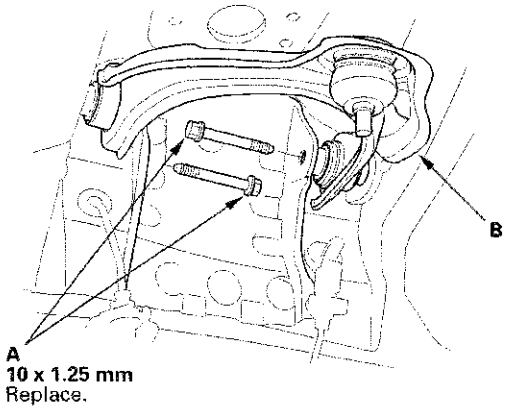

(cont'd)

Upper Arm Replacement (cont'd)

7. Install the upper arm (A), and lightly tighten the new upper arm mounting bolts (B), then connect the knuckle, and lightly tighten the castle nut (C).

   NOTE:
   - Be careful not to damage the ball joint boot when connecting the knuckle.
   - Before connecting the ball joint, degrease the threaded section and the tapered portion of the ball joint pin, the ball joint connecting hole, and the threaded section and the mating surfaces of the castle nut.

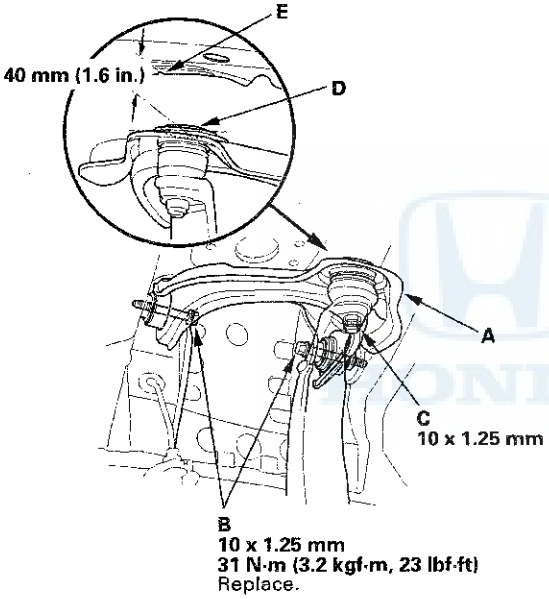

8. Place a floor jack under the lower arm, and raise the suspension until the clearance between the top (D) of the upper arm ball joint and the backside of the fender cut out point (E) is 40 mm (1.6 in.), then tighten the upper arm mounting bolts to the specified torque value.

   NOTE: To measure the specified clearance, temporarily remove the front inner fender (see page 20-273).

9. Lower the floor jack

10. Install the front damper/spring (see page 18-32).

11. Place the floor jack under the lower arm, and raise the suspension to load it with the vehicle's weight.

12. Tighten the castle nut (A) on the upper arm ball joint to the specified torque value.

    NOTE:
    - Torque the castle nut to the lower torque specification, then tighten it only far enough to align the slot with the ball joint pin hole. Do not align the castle nut by loosening it.
    - Insert the new cotter pin (B) into the ball joint pin hole from the front to the rear of the vehicle, and bend its end as shown. Check the ball joint pin hole direction before connecting the ball joint.

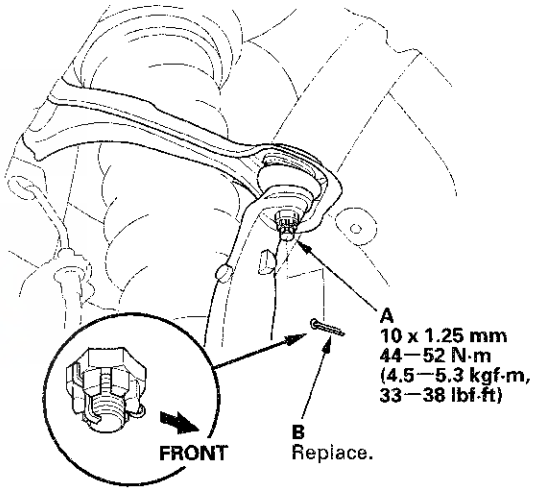

13. Clean the mating surfaces of the brake disc and the inside of the wheel, then install the front wheel.

14. Check the wheel alignment, and adjust it if necessary (see page 18-5).

Lower Arm Removal/Installation

Special Tools Required
- Ball joint remover, 28 mm 07MAC-SL0A202
- Bushing driver 070AF-TA0A100
- Bushing receiver set 070AF-TA0A220

Removal/Installation

1. Raise the front of the vehicle, and support it with safety stands in the proper locations (see page 1-11).

2. Remove the front wheel.

3. Remove the damper pinch bolt (A) and the damper fork mounting nut (B) while holding the mounting bolt (C), then remove the damper fork (D) from the damper and the lower arm.

   NOTE:
   - During installation, insert the aligning tab (E) on the damper unit into the slot (F) of the damper fork.
   - Use the new damper fork mounting bolt and the new mounting nut, and torque the nut while holding the bolt during reassembly.

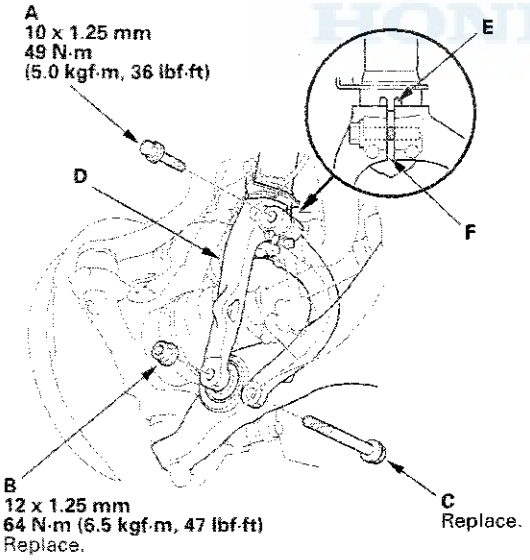

4. Disconnect the stabilizer link from the lower arm (see page 18-24).

5. Remove the cotter pin (A) from the knuckle ball joint, then remove the castle nut (B).

   NOTE: During installation, insert the new cotter pin into the ball joint pin hole from the front to the rear of the vehicle, and bend its end as shown. Check the ball joint pin hole direction before connecting the ball joint.

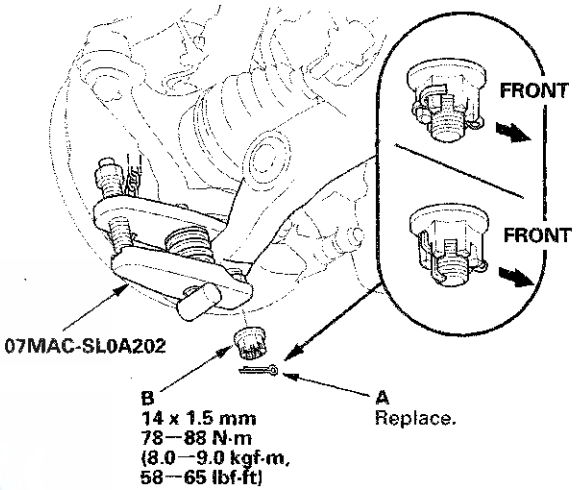

6. Disconnect the knuckle ball joint from the lower arm using the ball joint remover (see page 18-11).

   NOTE:
   - Be careful not to damage the ball joint boot when installing the remover.
   - Do not force or hammer on the lower arm, or pry between the lower arm and the knuckle. You could damage the ball joint.

(cont'd)

Lower Arm Removal/Installation (cont'd)

7. Remove the lower arm mounting bolts, and remove the lower arm (A).

   NOTE: Use new lower arm mounting bolts during reassembly.

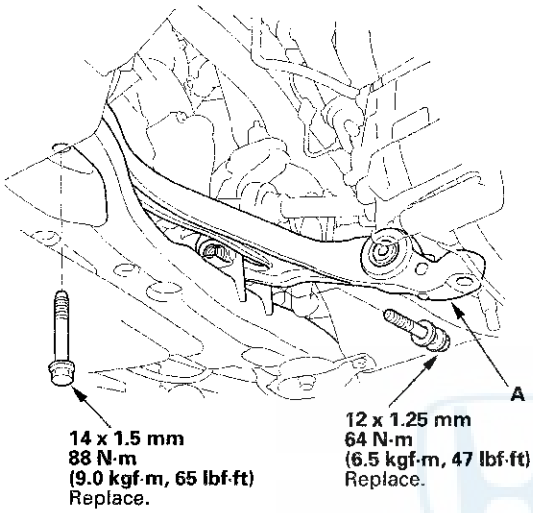

8. Install the lower arm in the reverse order of removal, and note these items:

   - First install all of the components, and lightly tighten the bolts and the nuts, then raise the suspension to load it with the vehicle's weight before fully tightening it to the specified torque values. Do not place the jack against the ball joint pin of the knuckle.
   - Be careful not to damage the ball joint boot when connecting the knuckle.
   - Before connecting the ball joint, degrease the threaded section and the tapered portion of the ball joint pin, the ball joint connecting hole, and the threaded section and the mating surfaces of the castle nut.
   - Torque the castle nut to the lower torque specification, then tighten it only far enough to align the slot with the ball joint pin hole. Do not align the castle nut by loosening it.
   - Before installing the wheel, clean the mating surfaces of the brake disc and the inside of the wheel.

9. Check the wheel alignment, and adjust it if necessary (see page 18-5).

Compliance Bushing Replacement

1. Remove the lower arm.

2. Mark alignment marks (A) on the bottom of the lower arm next to the aligning marks (B) on the compliance bushing.

   NOTE: The compliance bushing has a specific installation position. Turn the lower arm so that its bottom side is up. Position the bushing identifying mark (C) face up and near the tab (D) on the lower arm. Then align the bushing aligning marks on the bushing and the lower arm.
   If the alignment marks are gone, align the angle (E) between the lower arm and the bushing as shown.

   Aligning the marking position

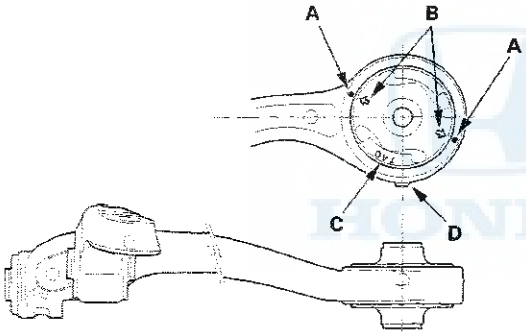

   Aligning the angle (reference)

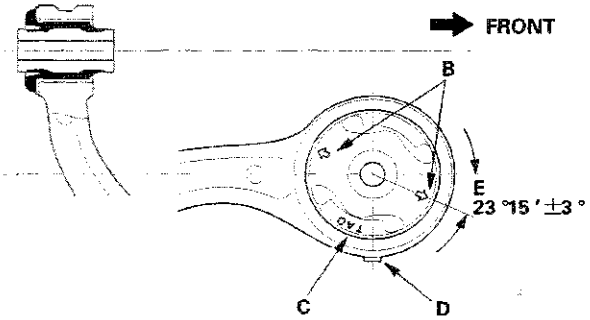

3. Press out the compliance bushing (A) with the bushing driver, the bushing receiver set (attachment A), and a hydraulic press, and remove the bushing from the lower arm (B).

   NOTE: Be careful not to damage the inside of the bushing hole on the lower arm.

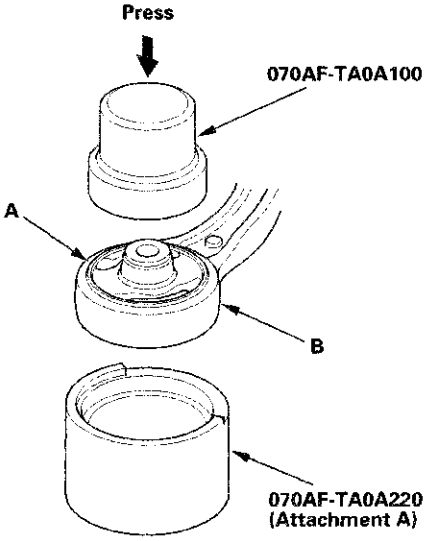

(cont'd)

Lower Arm Removal/Installation (cont'd)

4. Clean the mating surfaces of the new compliance bushing (A) and the lower arm (B).

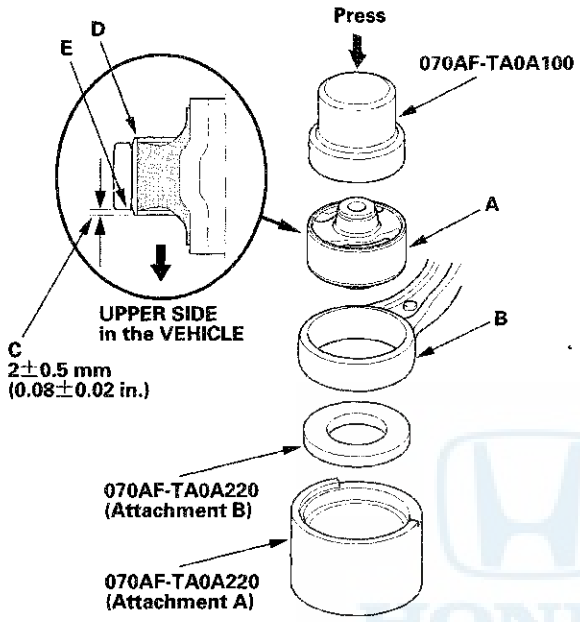

5. Make sure of the compliance bushing installation direction, align the bushing aligning marks with the lower arm, then press in the bushing into the lower arm using the bushing driver, the bushing receiver set (attachments A and B), and a hydraulic press.

   NOTE:
   - Press in the bushing from the bottom side of the lower arm.
   - After installation, check the protrusion (C) of the bushing outer sleeve (D) through the lower arm bushing hole (E).

6. Install the lower arm.

Stabilizer Link Removal/Installation

1. Raise the front of the vehicle, and support it with safety stands in the proper locations (see page 1-11).

2. Remove the front wheel.

3. Remove the self-locking nut (A) and the flange nut (B) while holding the respective joint pin (C) with a hex wrench (D), then remove the stabilizer link (E).

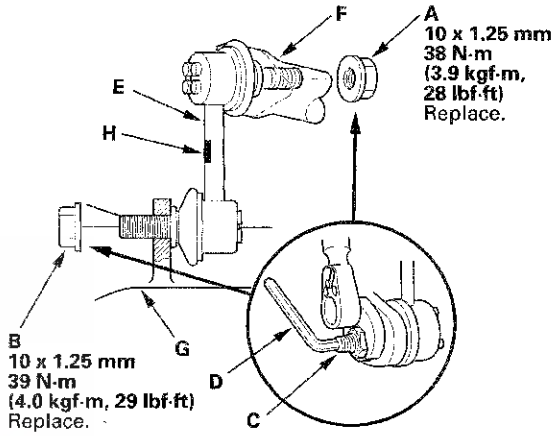

4. Install the stabilizer link on the stabilizer bar (F) and the lower arm (G) with the joint pins set at the center of their range of movement.

   NOTE: The stabilizer link has a paint mark (H). The left stabilizer link is marked with yellow paint, and the right stabilizer link is marked with white paint.

5. Install the new self-locking nut and the new flange nut, and tighten them to the specified torque values while holding the respective joint pin with a hex wrench.

6. Clean the mating surfaces of the brake disc and the inside of the wheel, then install the front wheel.

7. Test-drive the vehicle.

8. After 5 minutes of driving, tighten the self-locking nut again to the specified torque value.

Stabilizer Bar Replacement

Special Tools Required
- Engine hanger adapter VSB02C000015 *
- Engine support hanger, A and Reds AAR-T1256 *
- Front subframe adapter VSB02C000016 *
- Subframe alignment pin 070AG-SJAA10S

*: Available through the Honda Tool and Equipment Program, 888-424-6857.

1. Note these items during replacement:
   - Be sure to remove the steering wheel before disconnecting the steering joint. Damage to the cable reel can occur.
   - Lower the front subframe from the body, and replace the front stabilizer bar through the gap created by lowering the front subframe.

2. Remove the hood support rod, then use it as shown to prop the hood in the wide-open position.

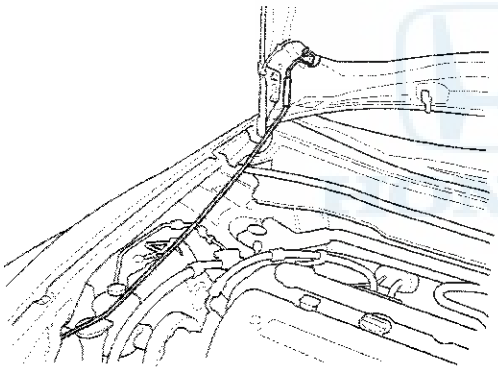

3. Remove the front grille cover:
   - 2-door (see page 20-257)
   - 4-door (see page 20-257)

4. Do the battery terminal disconnection procedure (see page 22-89).

5. Raise the vehicle, and support it with safety stands in the proper locations (see page 1-11).

6. Remove the front wheels.

7. Remove the driver's airbag and the steering wheel (see page 17-24).

8. Remove the steering joint cover (A).

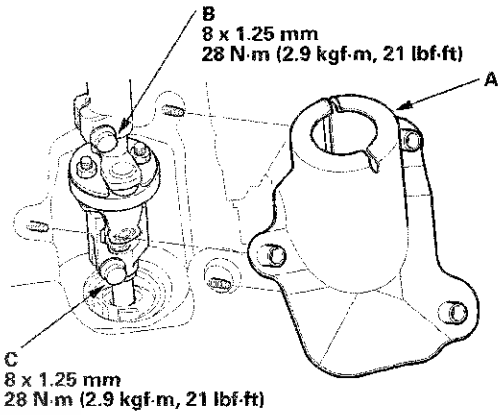

9. Loosen the steering joint upper bolt (B), and remove the steering joint lower bolt (C), then disconnect the steering joint from the pinion shaft.

   NOTE:
   - If the center guide is in place and has not moved, leave it in place.
   - If the center guide has come off discard it.

10. Disconnect the power steering pressure (PSP) switch connector (A).

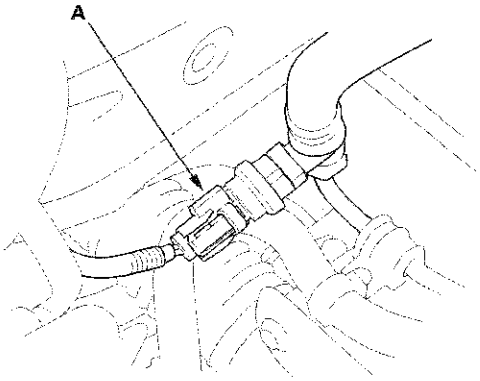

(cont'd)

Stabilizer Bar Replacement (cont'd)

11. Remove the power steering pump outlet hose mounting bolt (A).

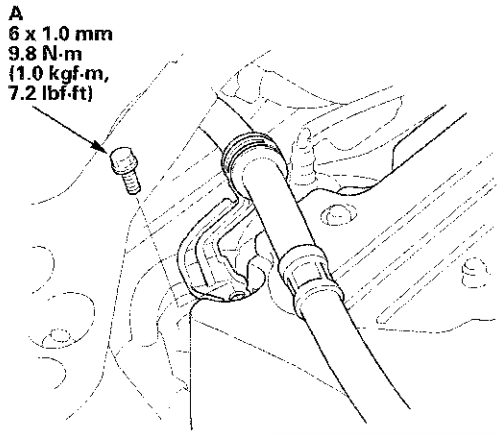

12. Remove the front strut brace (if equipped) (see page 20-289).

13. Attach the engine hanger adapter (VSB02C000015) to the threaded hole in the cylinder head.

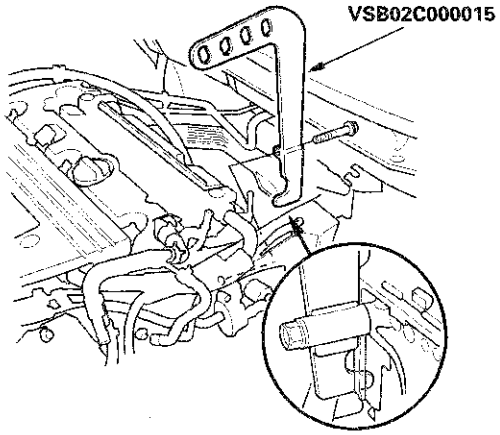

14. Install the engine support hanger (AAR-T1256), then attach the hook to the slotted hole in the hanger adapter. Tighten the wing nut (A) by hand to lift and support the engine/transmission.

NOTE: Be careful when working around the windshield.

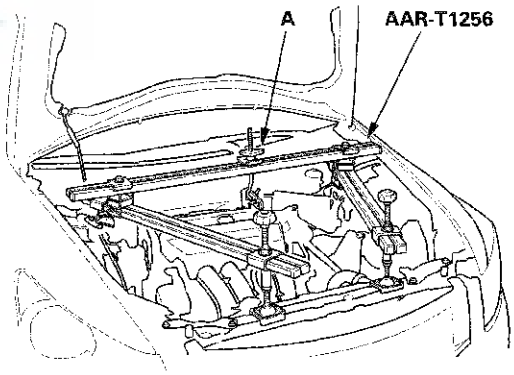

15. Remove the engine mount bolt (A) from the rear engine mount (B) and the rear engine mount bracket (C).

NOTE: Use a new engine mount bolt during reassembly.

A/T

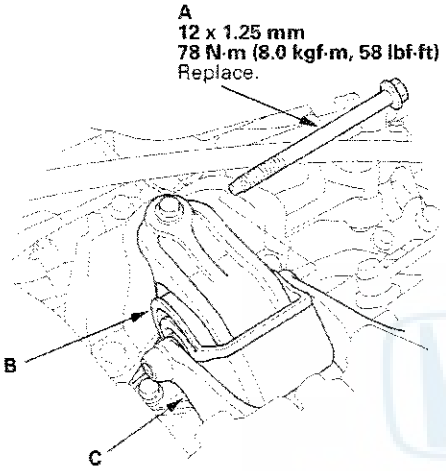

M/T

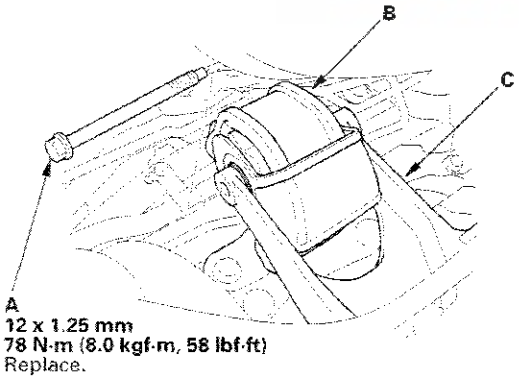

16. Raise the vehicle on the lift to full height.

17. Remove the front splash shield (see page 20-274).

18. Remove the nuts (A) securing of the lower transmission mount.

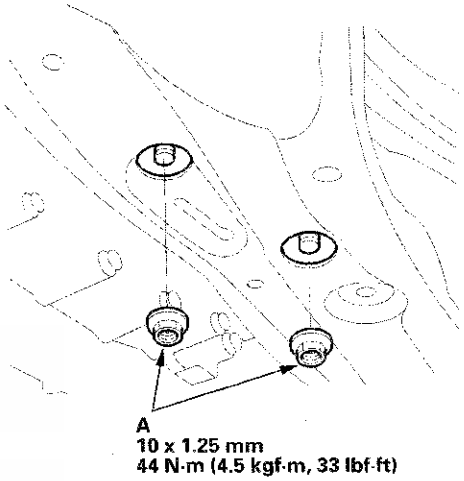

19. Remove the exhaust pipe A hanger (A) from the front subframe.

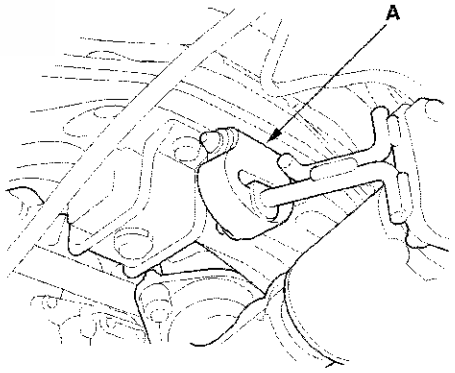

(cont'd)

Stabilizer Bar Replacement (cont'd)

20. Attach the front subframe adapter (VSB02C000016) to the subframe, hang the belt of the subframe adapter over the front of the subframe, then secure the belt with its stop.

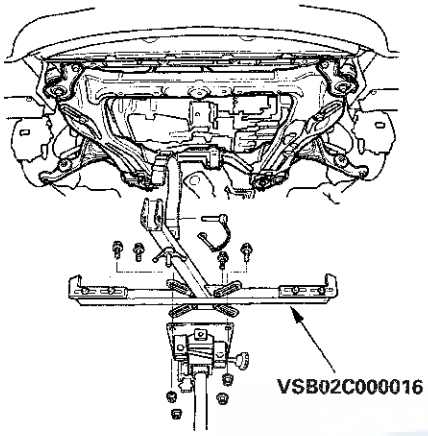

21. Raise the jack, line up the slots in the front subframe adapter arms with the bolt holes on the jack base, then securely attach them with four bolts.

22. Remove the front subframe mounting bolts (A) on both sides of the middle mount.

    NOTE: Use new mounting bolts during reassembly.

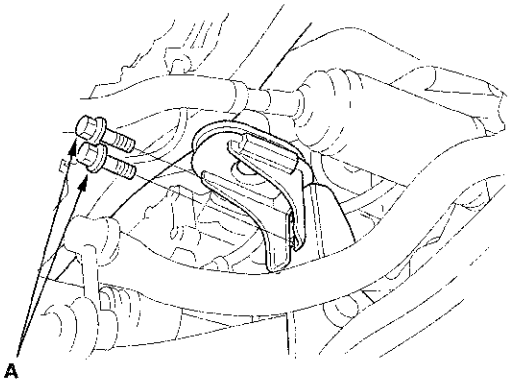

23. Disconnect both sides of the stabilizer link from the stabilizer bar (see page 18-24).

24. Remove the flange bolts (A) on both sides of the front subframe front bracket (B).

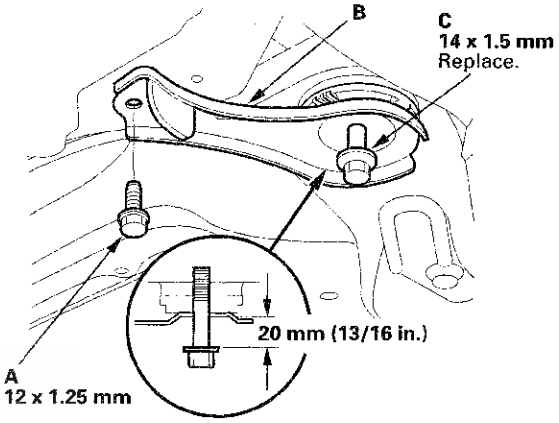

25. Loosen the front side of the front subframe mounting bolts (C) until there is 20 mm (13/16 in.) distance between the bolt seat and the mounting surface. Do not loosen the mounting bolts more than necessary.

26. Remove the flange bolts (A) on both sides of the front subframe rear bracket (B).

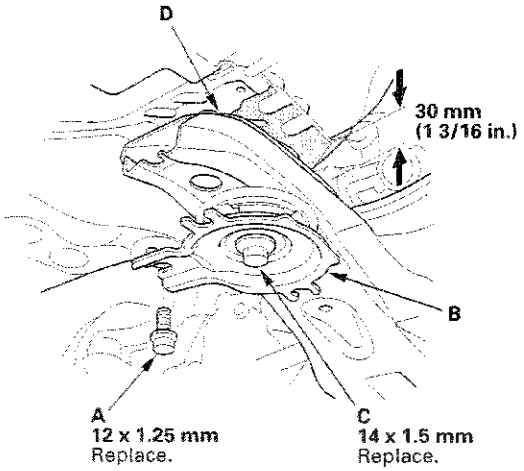

27. Loosen the rear side of the front subframe mounting bolts (C) until there is 30 mm (1 3/16 in.) distance between the bolt seat and the mounting surface. Do not loosen the mounting bolts more than necessary.

28. Lower the transmission jack with the front subframe adapter slowly until the front subframe (D) has dropped about 30 mm (1 3/16 in.).

    NOTE: Do not try to lower the front subframe beyond the loosened subframe mounting bolts clearance.

29. Remove the flange bolts (A) and the bushing holders (B), then remove the bushings (C).

    NOTE: During installation, align the paint marks (D) on the stabilizer bar with the side of the bushings.

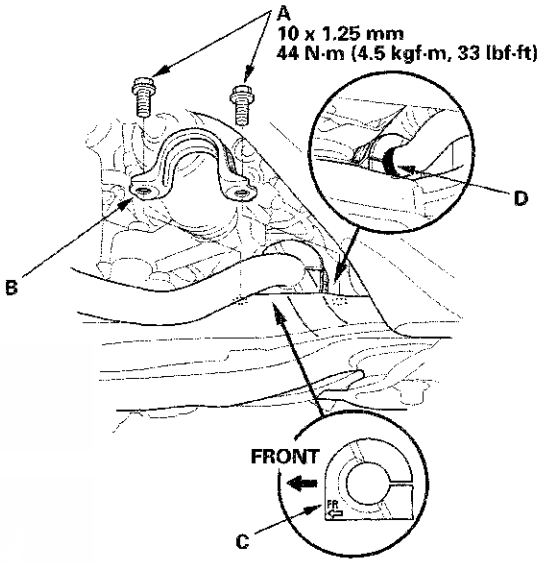

30. Move the stabilizer bar toward the passenger's side, and remove the stabilizer bar.

31. Install the stabilizer bar.

    NOTE:
    - Note the right and left direction of the stabilizer bar.
    - Note the direction of installation for the bushings.

(cont'd)

Stabilizer Bar Replacement (cont'd)

32. Align the front subframe using the subframe alignment pin. Vertically install the subframe alignment pin, and align the right-rear corner of the front subframe and vehicle frame holes, then loosely tighten the new subframe mounting bolt (A) until the front subframe contacts the body frame.

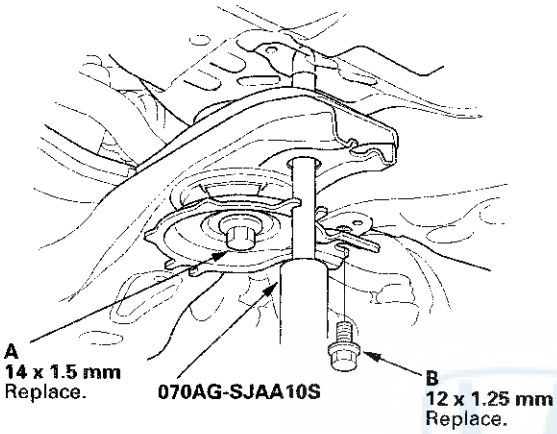

33. Loosely tighten the left-rear subframe mounting bolt using the same procedure as the right-rear with the subframe alignment pin.

34. Loosely install the new 12 mm flange bolts (B) to the subframe rear bracket.

35. Torque the subframe mounting bolts to the specified torque values starting with the right-rear bolt. Use the subframe alignment pin when tightening the rear side bolts (A).

NOTE:
- Torque the bolts in the sequence shown.
- Before tightening the new front side subframe mounting bolts (B), raise the jack and loosely install the 12 mm flange bolts (C) to align the subframe front bracket.

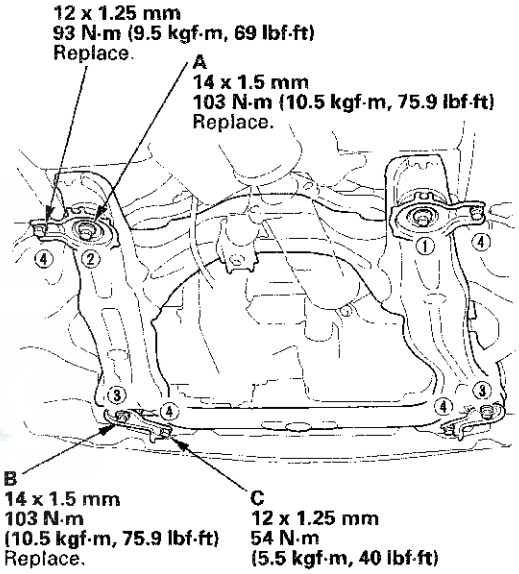

36. Check all of the front subframe mounting bolts, and retighten if necessary.

37. Install all of the removed parts in the reverse order of removal, and note these items:

    - Refer to stabilizer link removal/installation to connect the stabilizer bar to the links (see page 18-24).
    - If the center guide is in place, use it to determine the steering joint installation angle.
    - If the center guide is gone, check the steering joint installation angle (see step 3 on page 17-30).
    - Check the steering wheel installation (see page 17-27).
    - When connecting the rear engine mount to the rear engine mount bracket, first lightly tighten the mounting bolt, then remove the engine support hanger, and tighten it to the specified torque value.
    - Before installing the wheel, clean the mating surfaces of the brake disc and inside of the wheel.

38. Do the battery terminal reconnection procedure (see page 22-89), then turn the ignition switch to ON (II) and check that the SRS indicator should come on for about 6 seconds and then go off.

39. Check the wheel alignment, and adjust it if necessary (see page 18-5).

Damper/Spring Removal and Installation

Removal

1. Raise the front of the vehicle, and support it with safety stands in the proper locations (see page 1-11).

2. Remove the front wheel.

3. Remove the wheel speed sensor harness bracket mounting bolt (A).

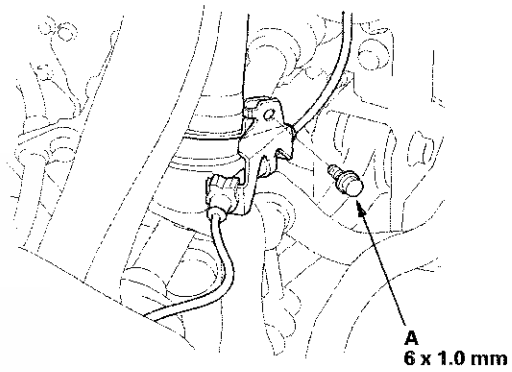

4. Remove the damper pinch bolt (A) and the damper fork mounting nut (B) while holding the mounting bolt (C), then remove the damper fork (D) from the damper and the lower arm.

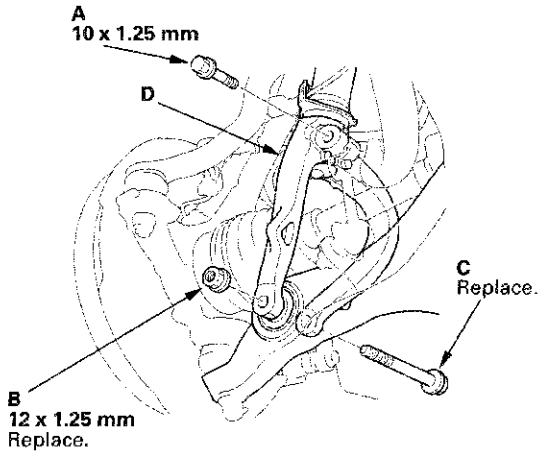

(cont'd)

Damper/Spring Removal and Installation (cont'd)

5. Remove the front strut brace mounting nuts (A) (if equipped).

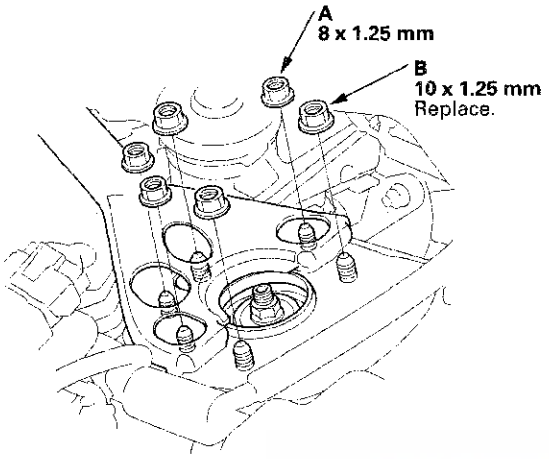

6. Remove the damper mounting nuts (B) from the top of the damper. Do not let the damper/spring drop down under its own weight.

7. Remove the damper/spring (A).

NOTE: Be careful not to damage the body.

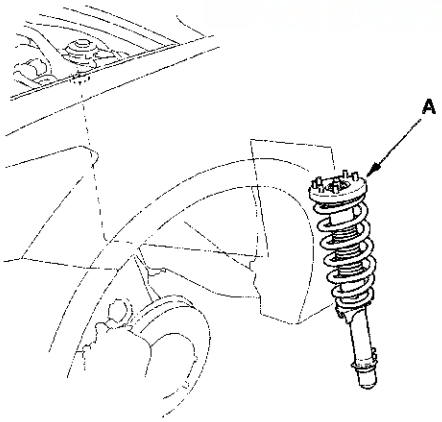

Installation

1. Position the damper/spring (A) in the body with the aligning tab (B) facing inside.

NOTE: Be careful not to damage the body.

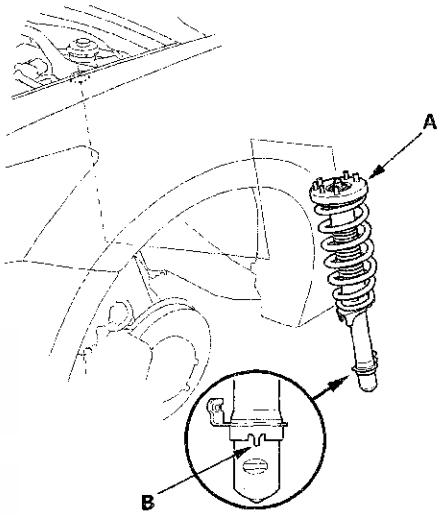

2. Loosely install the new damper mounting nuts (A) to the top of the damper.

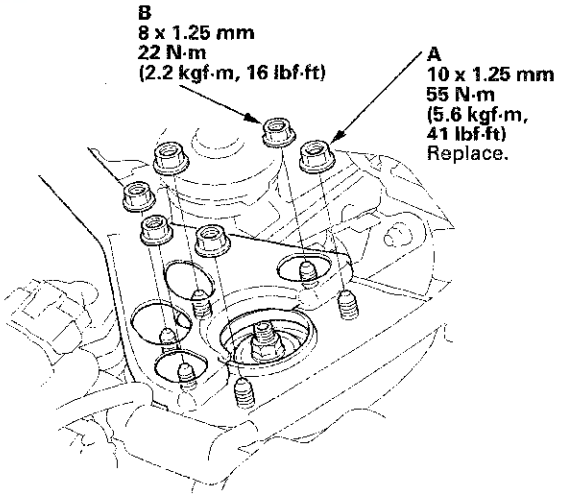

3. Loosely install the front strut brace mounting nuts (B) (if equipped).

4. Install the damper fork (A) over the driveshaft and onto the lower arm (B). Install the aligning tab (C) on the damper unit into the slot (D) of the damper fork.

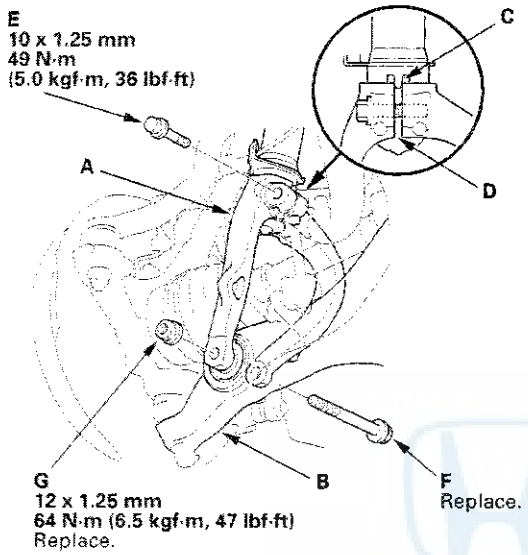

5. Loosely install the damper pinch bolt (E) into the damper fork.

6. Connect the damper fork and the lower arm with the new damper fork mounting bolt (F), then lightly tighten the new mounting nut (G).

7. Place a floor jack under the lower arm, and raise the suspension to load it with the vehicle's weight.

8. Tighten the damper pinch bolt and the damper fork mounting nut while holding the mounting bolt to the specified torque values.

9. Tighten the damper mounting nuts and front strut brace mounting nuts (if equipped) on top of the damper to the specified torque values.

10. Install the wheel speed sensor harness bracket (A).

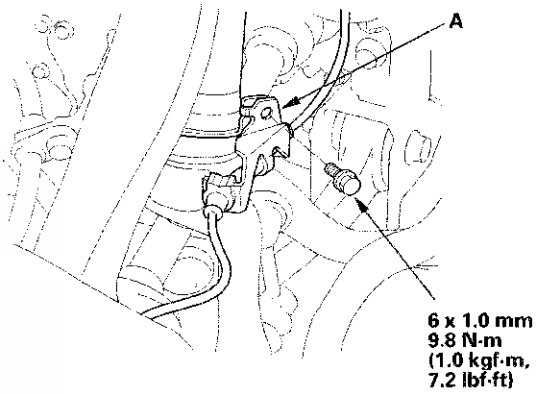

11. Clean the mating surfaces of the brake disc and the inside of the wheel, then install the front wheel.

12. Check the wheel alignment, and adjust it if necessary (see page 18-5).

Damper/Spring Disassembly, Inspection, and Reassembly

Exploded View

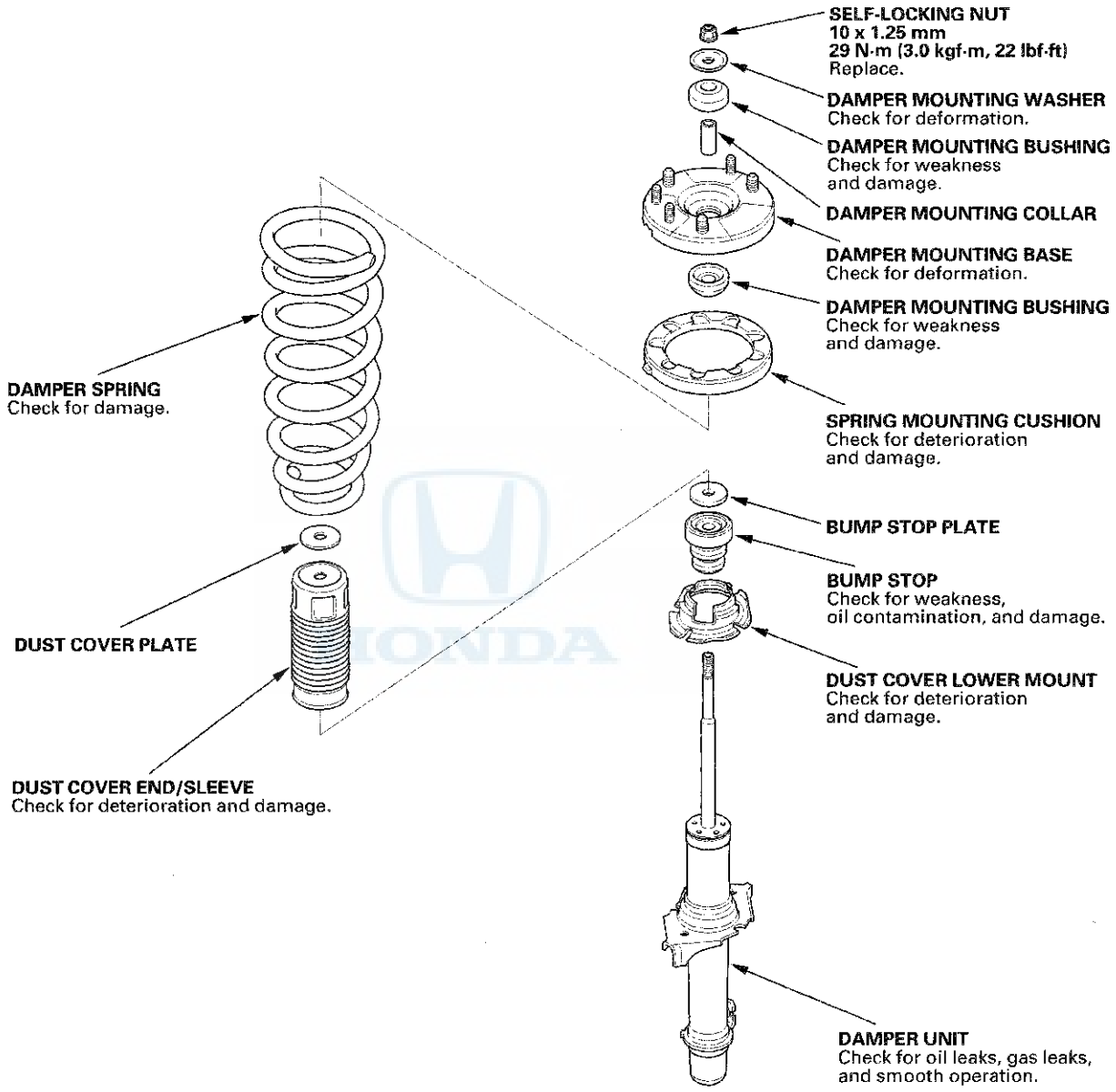

NOTE: When compressing the damper spring, use a commercially available strut spring compressor (Branick MST-580A or Model 7200, or equivalent) according to the manufacturer's instructions.

Disassembly

1. Compress the damper spring, then remove the self-locking nut (A) while holding the damper shaft with a hex wrench (B). Do not compress the damper spring more than necessary to remove the self-locking nut.

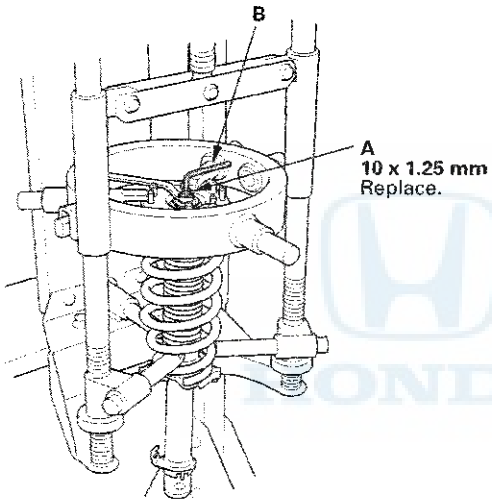

2. Release the pressure from the strut spring compressor, then disassemble the damper as shown in the Exploded View.

Inspection

1. Reassemble all the parts, except for the damper spring.

2. Compress the damper assembly by hand, and check for smooth operation through a full stroke, both compression and extension. The damper should extend smoothly and constantly when compression is released. If it does not, the gas is leaking and the damper should be replaced.

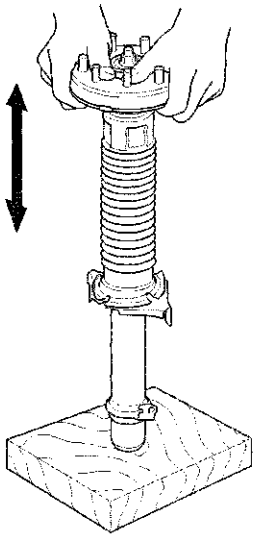

3. Check for oil leaks, abnormal noises, and binding during these tests.

(cont'd)

Damper/Spring Disassembly, Inspection, and Reassembly (cont'd)

Reassembly

1. Install the spring mounting cushion (A) on the damper mounting base (B) by aligning the tab (C) and notch (D).

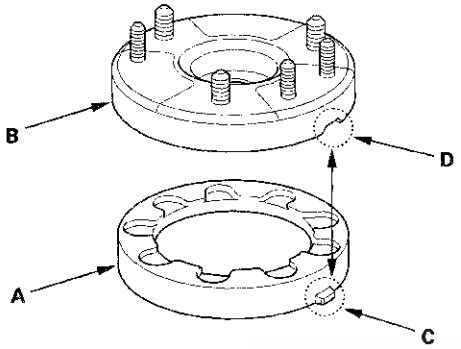

2. Install all the parts except the damper mounting washer and the self-locking nut onto the damper unit by referring to the Exploded View.

3. Compress the damper spring using a strut spring compressor. Do not compress the spring excessively.

4. Align the lower end (A) of the damper spring with the stepped part (B) of the dust cover lower mount and the lower spring seat on damper unit.

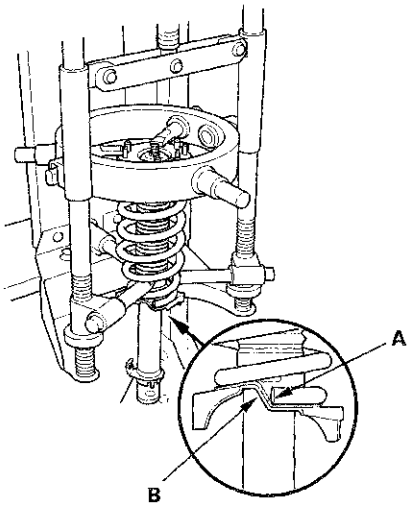

5. Position the tab (A) on the spring mounting cushion facing forward but toward the inside of the vehicle.

Left

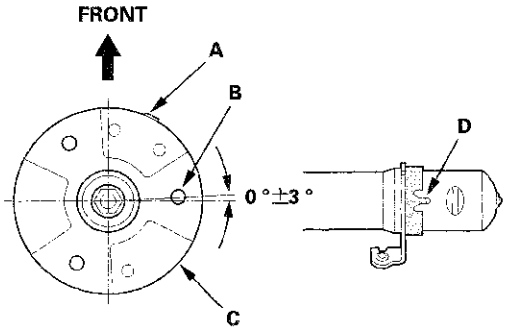

Right

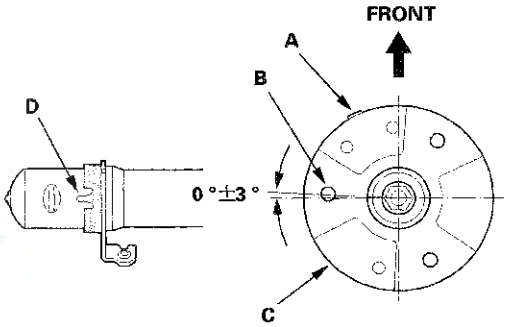

6. Align the angle of the stud (B) on the damper mounting base (C) with the aligning tab (D) on the bottom of the damper unit as shown.

7. Install the damper mounting washer (A) and the new self-locking nut (B).

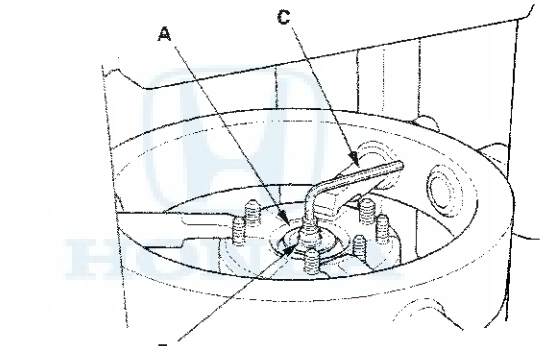

10 x 1.25 mm
29 N·m (3.0 kgf·m, 22 lbf·ft)
Replace.

8. Hold the damper shaft with a hex wench (C), and tighten the self-locking nut to the specified torque value.

9. Remove the damper/spring from the strut spring compressor.

Knuckle/Hub Bearing Unit Replacement

Exploded View

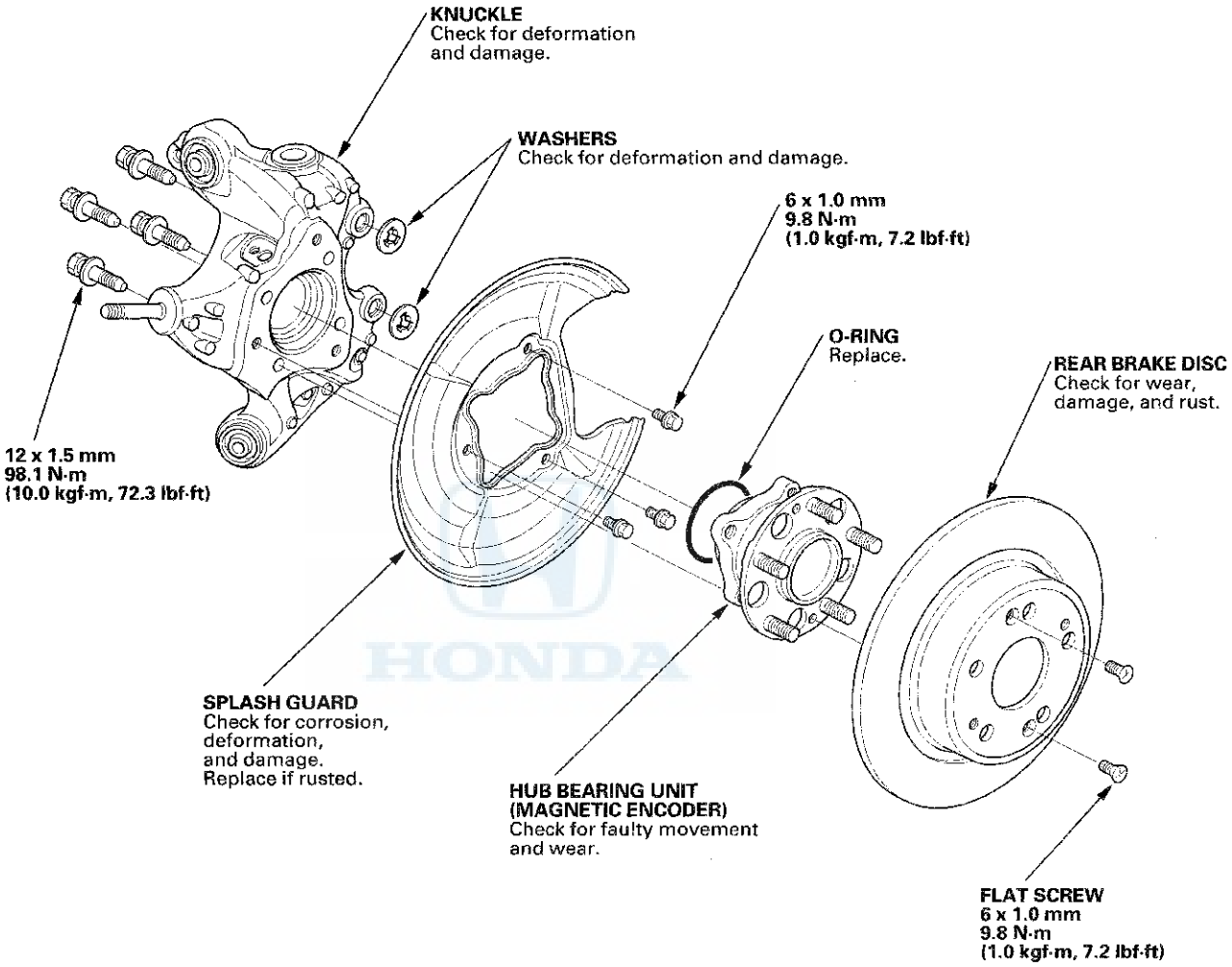

Special Tools Required
Ball joint remover, 32 mm 07MAC-SL0A102

Hub Bearing Unit Replacement

1. Raise the rear of the vehicle, and support it with safety stands in the proper locations (see page 1-11).

2. Remove the wheel nuts, and the rear wheel.

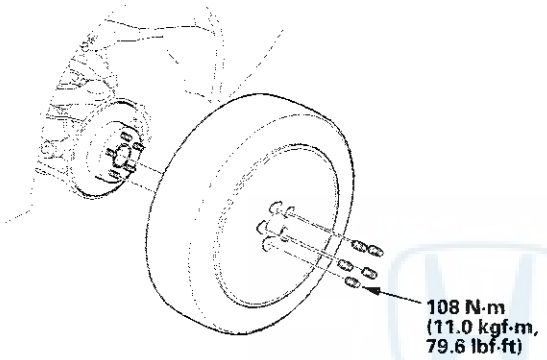

3. Release the parking brake lever fully.

4. Loosen the parking brake cable adjusting nut (see page 19-8).

5. Remove the flange bolt (A) from the arm (B). Then disconnect the parking brake cable from the lever (C).

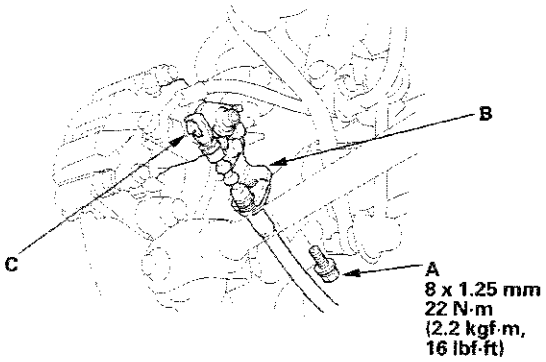

6. Remove the brake hose mounting bolt (A).

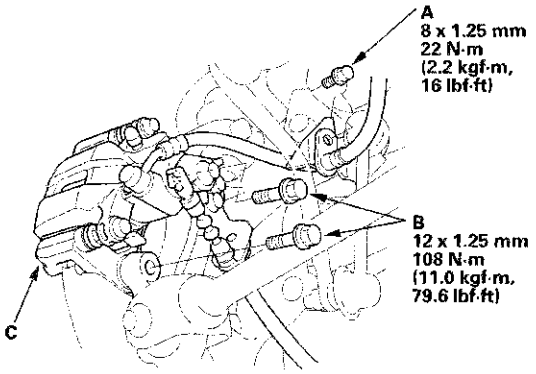

7. Remove the brake caliper bracket mounting bolts (B), then remove the caliper assembly (C) from the knuckle. To prevent damage to the caliper assembly or the brake hose, use a short piece of wire to hang the caliper assembly from the undercarriage. Do not twist the brake hose excessively.

8. Remove the two washers (A).

   NOTE: During installation, make sure the washers are installed between the brake caliper bracket and the knuckle.

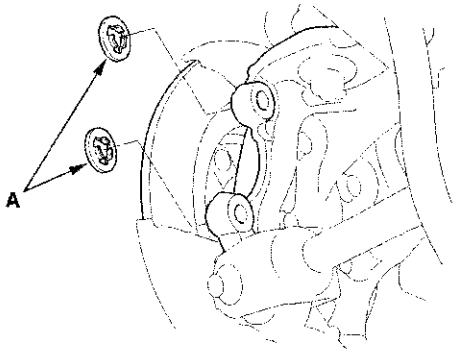

9. Remove the rear brake disc (see page 19-34).

(cont'd)

Knuckle/Hub Bearing Unit Replacement (cont'd)

10. Remove the hub bearing unit (A) and the O-ring (B).

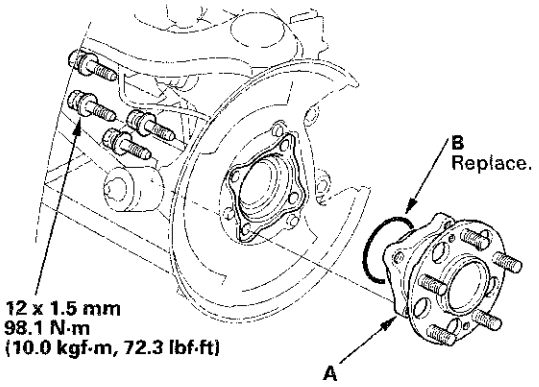

11. Check the hub bearing unit for damage and cracks.

12. Install the hub bearing unit in the reverse order of removal, and note these items:

    - Use a new O-ring on reassembly.
    - After installing the brake caliper, make sure the clearance between lower arm B and the parking brake cable is more than 5 mm (3/16 in.).
    - Before installing the brake disc, clean the mating surfaces of the hub bearing unit and the brake disc.
    - Before installing the wheel, clean the mating surfaces of the brake disc and the inside of the wheel.

13. Check the wheel alignment, and adjust it if necessary (see page 18-5).

Knuckle Replacement

1. Remove the hub bearing unit.

2. Remove the splash guard (A).

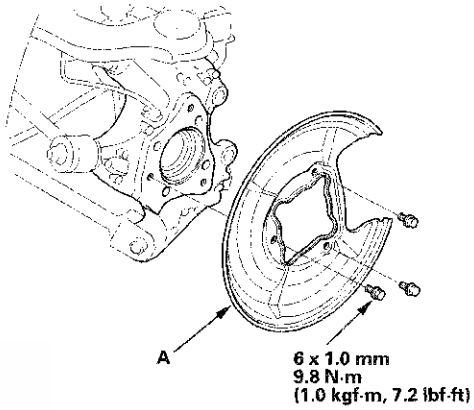

3. Remove the lock pin (A) from the upper arm ball joint, then remove the castle nut (B).

   NOTE: During installation, install the lock pin as shown after tightening the new castle nut.

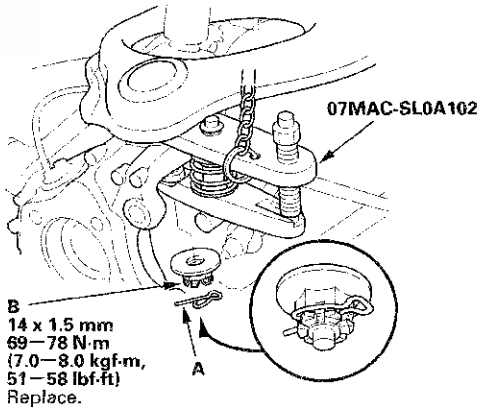

4. Disconnect the upper arm ball joint from the knuckle using the ball joint remover (see page 18-11).

   NOTE:
   - Be careful not to damage the ball joint boot when installing the remover.
   - During installation, to connect the ball joint, raise the suspension with a jack (see step 9 on page 18-43).

5. Remove the wheel speed sensor (A) from the knuckle. Do not disconnect the wheel speed sensor connector.

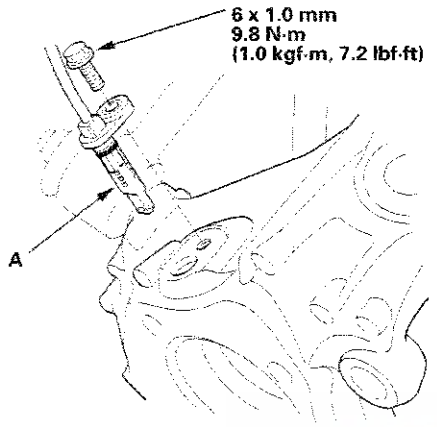

6. Remove the flange nut (A) while holding the joint pin (B) with a hex wrench (C), then disconnect the stabilizer link (D) from the knuckle, and remove the brake hose bracket (E).

NOTE: Use the new flange nut during reassembly.

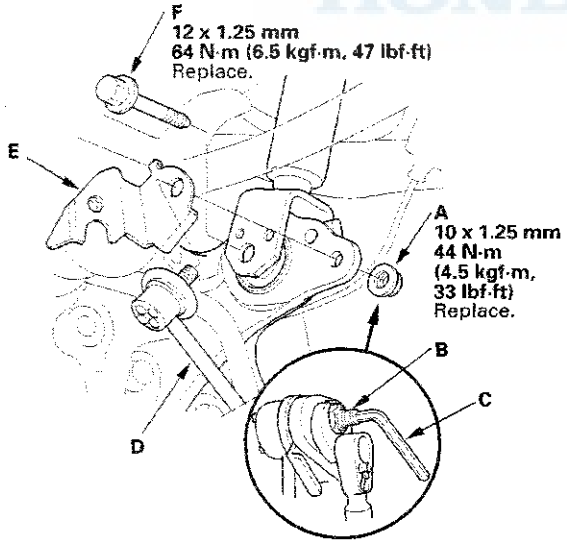

7. Remove the damper lower mounting bolt (F).

NOTE: Use the new mounting bolt during reassembly.

8. Remove the control arm mounting self-locking nut (A) and the washer (B).

NOTE: Use a new self-locking nut during reassembly.

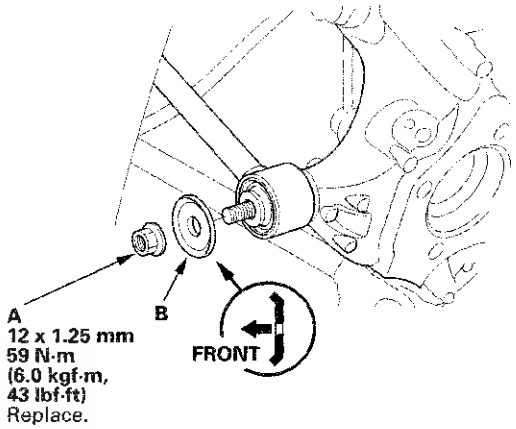

9. Remove the lower arm mounting bolt (A), and the lower arm B mounting bolt (B), then remove the knuckle (C).

NOTE: Use new mounting bolts during reassembly.

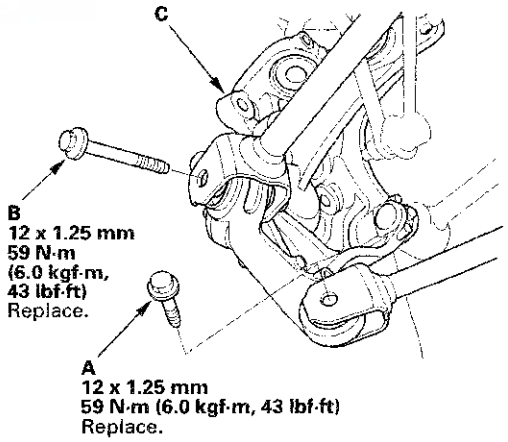

(cont'd)

Knuckle/Hub Bearing Unit Replacement (cont'd)

10. Install the knuckle in the reverse order of removal, and note these items:

    - First install all of the components, and lightly tighten the bolts and the nuts, then raise the suspension to load it with the vehicle's weight before fully tightening to the specified torque values.
    - Be careful not to damage the ball joint boot when connecting the knuckle.
    - Before connecting the ball joint, degrease the threaded section and the tapered portion of the ball joint pin, the ball joint connecting hole, and the threaded section and the mating surfaces of the castle nut.
    - Torque the castle nut to the lower torque specification, then tighten it only far enough to align the slot with the ball joint pin hole. Do not align the castle nut by loosening it.
    - Before installing the wheel, clean the mating surfaces on the brake disc and the inside of the wheel.

11. Check the wheel alignment, and adjust it if necessary (see page 18-5).

Upper Arm Replacement

Special Tools Required
Ball joint remover, 32 mm 07MAC-SL0A102

1. Raise the rear of the vehicle, and support it with safety stands in the proper locations (see page 1-11).
2. Remove the rear wheel.
3. Remove the rear damper/spring (see page 18-49).
4. Release the parking brake lever fully.
5. Loosen the parking brake cable adjusting nut (see page 19-8).
6. Remove the flange bolt (A) from the arm (B). Then disconnect the parking brake cable from the lever (C).

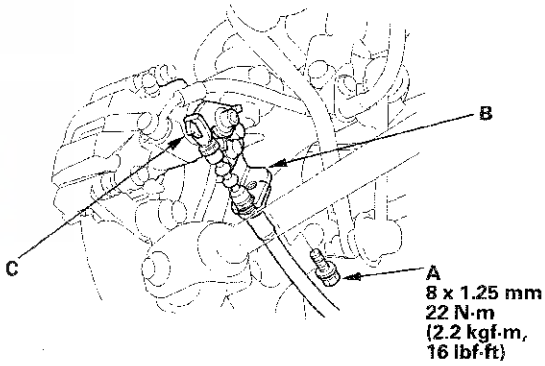

7. Remove the brake caliper bracket mounting bolts (A), then remove the caliper assembly (B) from the knuckle. To prevent damage to the caliper assembly or the brake hose, use a short piece of wire to hang the caliper assembly from the undercarriage. Do not twist the brake hose excessively.

   NOTE: Make sure the washers (C) position on reassembly, if they are removed (see step 8 on page 18-39).

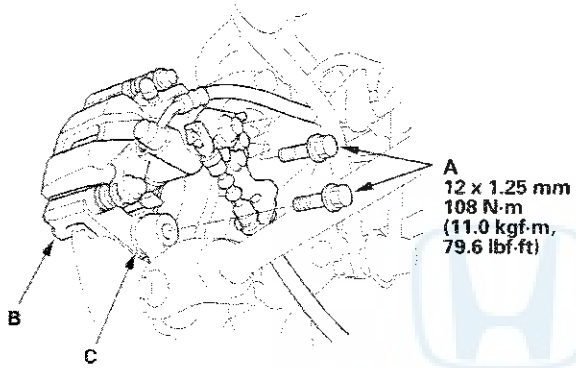

8. Remove the lock pin (A) from the upper arm ball joint, then remove the castle nut (B).

   NOTE: During installation, install the lock pin as shown after tightening the castle new nut.

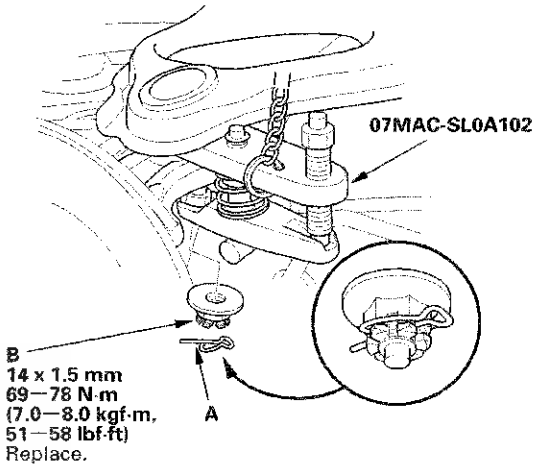

9. Disconnect the upper arm ball joint from the knuckle using the ball joint remover (see page 18-11).

   NOTE:
   - Be careful not to damage the ball joint boot when installing the remover.
   - During installation, to connect the ball joint, position a floor jack under the connecting point of the knuckle and lower arm A, and raise the suspension with the jack.

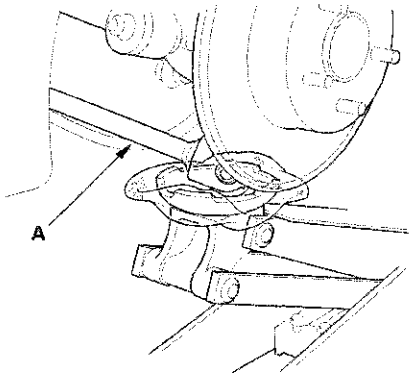

(cont'd)

Upper Arm Replacement (cont'd)

10. Remove the wheel speed sensor harness bracket (A).

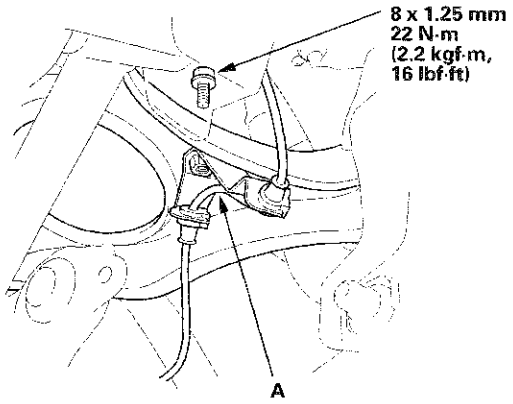

11. Remove the upper arm mounting bolts (A), then remove the upper arm (B).

    NOTE: Use new mounting bolts during reassembly.

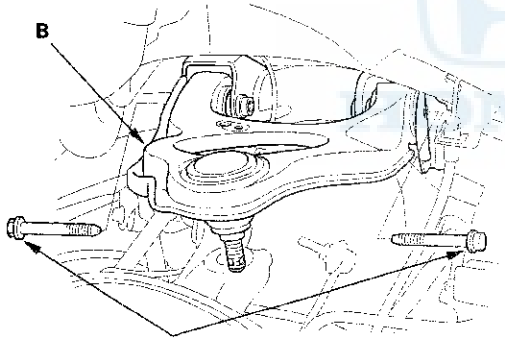

A
12 x 1.25 mm
59 N·m (6.0 kgf·m, 43 lbf·ft)
Replace.

12. Install the upper arm in the reverse order of removal, and note these items;

    - First install all of the components, and lightly tighten the bolts and the nuts, then raise the suspension to load it with the vehicle's weight before fully tightening to the specified torque values.
    - Be careful not to damage the ball joint boot when connecting the knuckle.
    - Before connecting the ball joint, degrease the threaded section and the tapered portion of the ball joint pin, the ball joint connecting hole, and the threaded section and the mating surfaces of the castle nut.
    - Torque the castle nut to the lower torque specification, then tighten it only far enough to align the slot with the ball joint pin hole. Do not align the castle nut by loosening it.
    - After installing the brake caliper, make sure the clearance between lower arm B and the parking brake cable is more than 5 mm (3/16 in.).
    - Before installing the wheel, clean the mating surfaces on the brake disc and the inside of the wheel.

13. Check the wheel alignment, and adjust it if necessary (see page 18-5).

Lower Arm A Replacement

1. Raise the rear of the vehicle, and support it with safety stands in the proper locations (see page 1-11).

2. Remove the rear wheel.

3. Remove the parking brake cable mounting bolt (B).

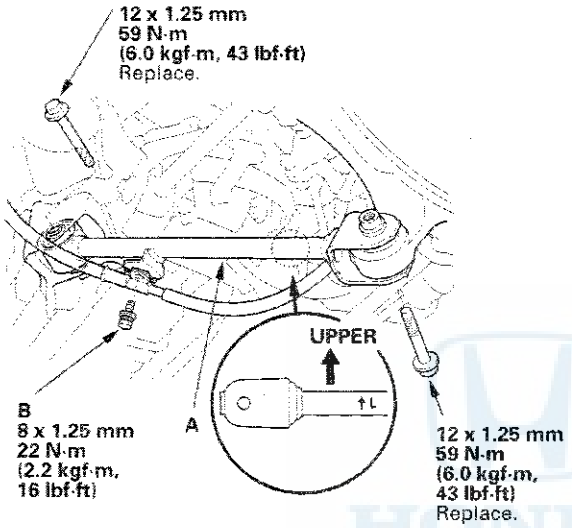

4. Remove the lower arm A mounting bolts, then remove lower arm A.

   NOTE: Use new mounting bolts during reassembly.

5. Install lower arm A in the reverse order of removal, and note these items:

   - First install all of the components, and lightly tighten the bolts, then raise the suspension to load it with the vehicle's weight before fully tightening to the specified torque values.
   - Before installing the wheel, clean the mating surfaces on the brake disc and the inside of the wheel.

6. Check the wheel alignment, and adjust it if necessary (see page 18-5).

Control Arm Replacement

1. Raise the rear of the vehicle, and support it with safety stands in the proper locations (see page 1-11).

2. Remove the rear wheel.

3. Remove the control arm mounting self-locking nut (A) and the washer (B) from the knuckle side.

   NOTE: Use a new self-locking nut during reassembly.

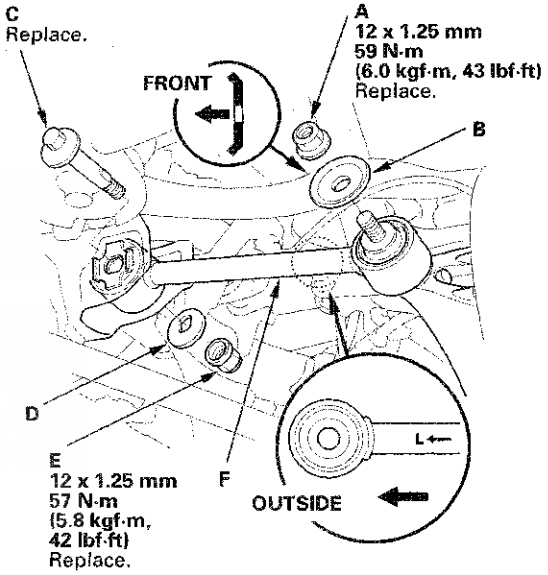

4. Mark the cam positions of the adjusting bolt (C) and the adjusting cam plate (D) with the frame.

5. Remove the self-locking nut (E) while holding the adjusting bolt, then remove the adjusting cam plate, the adjusting bolt, and the control arm (F).

   NOTE: Use a new adjusting bolt and a new self-locking nut during reassembly.

(cont'd)

Control Arm Replacement (cont'd)

6. Install the control arm in the reverse order of removal, and note these items:

   - First install all of the components, and lightly tighten the bolts and the nuts, then raise the suspension to load it with the vehicle's weight before fully tightening to the specified torque values.
   - Position the extended surfaces of the cam on the adjusting bolt and the adjusting cam plate facing down.
   - Align the cam positions of the adjusting bolt and the adjusting cam plate with the marked positions on the frame when tightening the self-locking nut.
   - Before installing the wheel, clean the mating surfaces on the brake disc and the inside of the wheel.

7. Check the wheel alignment, and adjust it if necessary (see page 18-5).

Lower Arm B Replacement

1. Raise the rear of the vehicle, and support it with safety stands in the proper locations (see page 1-11).

2. Remove the rear wheel.

3. Remove the lower arm B mounting bolts, then remove lower arm B.

   NOTE: Use new mounting bolts during reassembly.

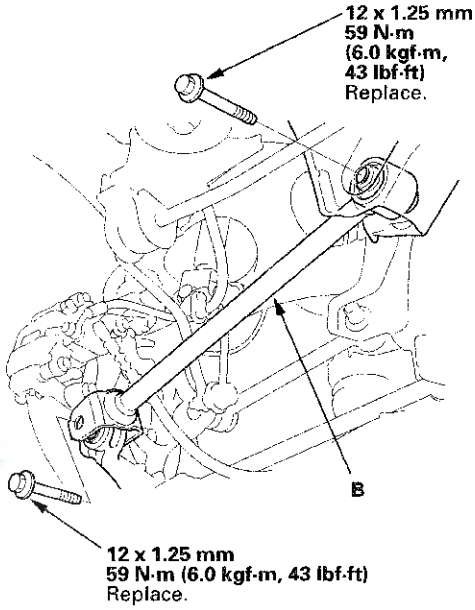

4. Install lower arm B in the reverse order of removal, and note these items:

   - First install all of the components, and lightly tighten the bolts, then raise the suspension to load it with the vehicle's weight before fully tightening to the specified torque values.
   - Make sure the clearance between lower arm B and the parking brake cable is more than 5 mm (3/16 in.).
   - Before installing the wheel, clean the mating surfaces on the brake disc and the inside of the wheel.

5. Check the wheel alignment, and adjust it if necessary (see page 18-5).

Stabilizer Link Removal/Installation

1. Raise the rear of the vehicle, and support it with safety stands in the proper locations (see page 1-11).

2. Remove the rear wheel.

3. Remove the flange nut (A) and the self-locking nut (B) while holding the respective joint pin (C) with a hex wrench (D), then remove the stabilizer link (E).

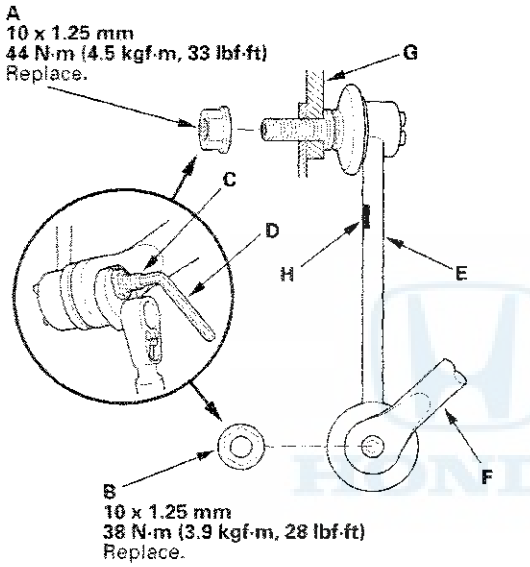

4. Install the stabilizer link on the stabilizer bar (F) and the knuckle adding in the brake hose bracket (G) with the joint pins set at the center of their range of movement.

   NOTE:
   - The stabilizer link has a paint mark (H). The paint mark indicates the difference between the left and right stabilizer links.
   - Install the end of the stabilizer link with the paint mark in the upper position.

5. Install the flange nut and the new self-locking nut, and tighten them to the specified torque values while holding the respective joint pin with a hex wrench.

6. Clean the mating surfaces of the brake disc and the inside of the wheel, then install the rear wheel.

7. Test-drive the vehicle.

8. After 5 minutes of driving, tighten the self-locking nut again to the specified torque value.

Stabilizer Bar Replacement

1. Raise the rear of the vehicle, and support it with safety stands in the proper locations (see page 1-11).

2. Remove the rear wheels.

3. Disconnect both stabilizer links from the stabilizer bar (see page 18-47).

4. Remove the flange bolts (A) and the bushing holders (B), then remove the bushings (C) and the stabilizer bar (D).

   NOTE: During installation, align the paint marks (E) on the stabilizer bar with the side of the bushings.

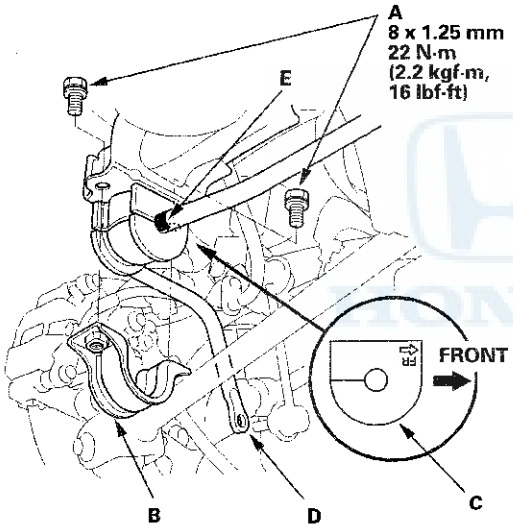

5. Install the stabilizer bar in the reverse order of removal, and note these items:

   - Note the right and left direction of the stabilizer bar.
   - Note the direction of installation for the bushing.
   - Refer to the stabilizer link removal/installation to connect the stabilizer bar to the links (see page 18-47).
   - Before installing the wheel, clean the mating surfaces of the brake disc and the inside of the wheel.

6. Check the wheel alignment, and adjust it if necessary (see page 18-5).

Damper/Spring Removal and Installation

Removal

1. Raise the rear of the vehicle, and support it with safety stands in the proper locations (see page 1-11).

2. Remove the rear wheel.

3. Fold down the rear seat-back, then remove the lid (A).

   NOTE: For 4-door, lift up the tab (B) inside underneath the lid first using a flat-tipped screwdriver, then release the hooks.

   4-door

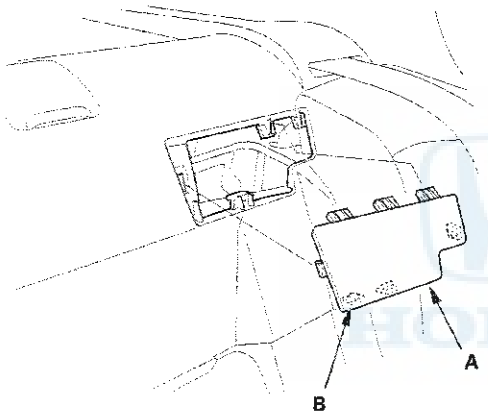

   2-door

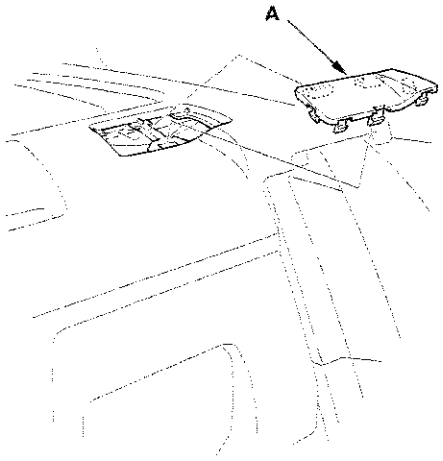

4. Remove the damper mounting nuts (A) from the top of the damper.

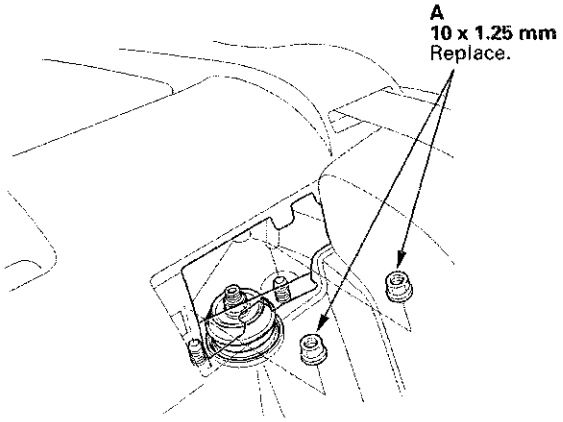

5. Remove the flange nut (A) while holding the joint pin (B) with a hex wrench (C), then disconnect the stabilizer link (D) from the knuckle, and remove the brake hose bracket (E).

   NOTE: Use a new flange nut during reassembly.

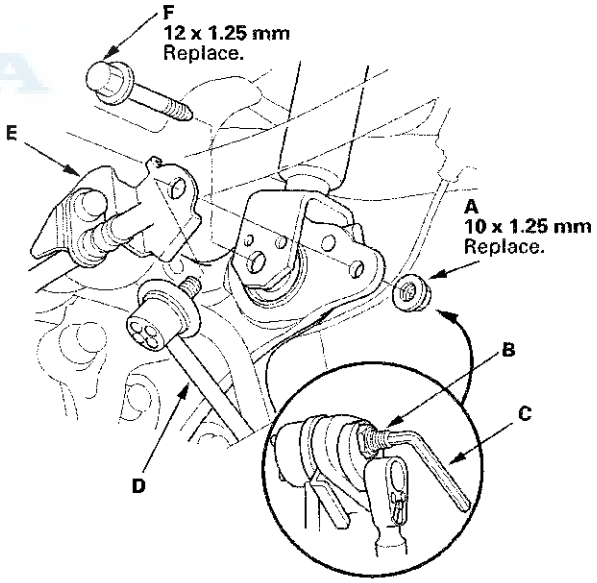

6. Remove the damper lower mounting bolt (F).

   NOTE: Use the new mounting bolt during reassembly.

(cont'd)

Damper/Spring Removal and Installation (cont'd)

7. Remove the damper/spring (A) by lowering the rear suspension.

   NOTE: Be careful not to damage the body.

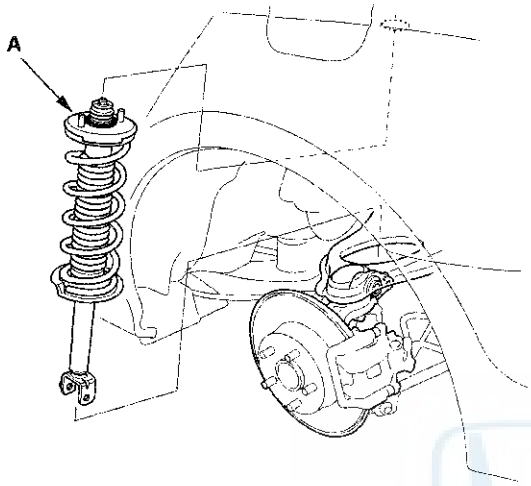

Installation

1. Lower the rear suspension, and position the damper/spring (A) in the body with the welded nut (B) on the bottom of the damper facing forward.

   NOTE:
   - Be careful not to damage the body.
   - Make sure the damper is installed in the correct direction.

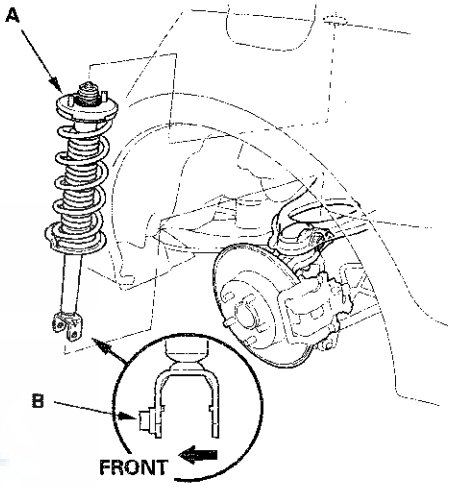

2. Loosely install the new damper mounting nuts (A) to the top of the damper.

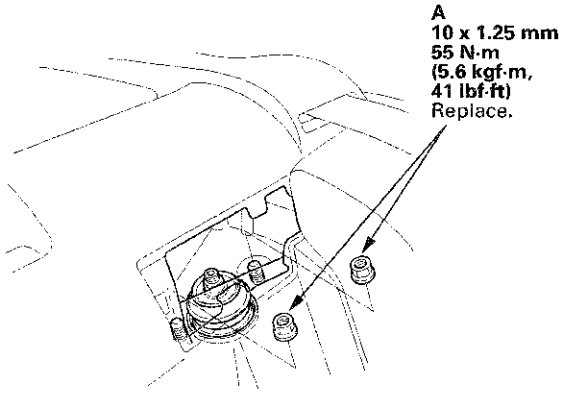

3. Loosely install the new damper lower mounting bolt (A) on the bottom of the damper. Connect the stabilizer link (B) to the brake hose bracket (C) to the knuckle, and loosely install the new flange nut (D).

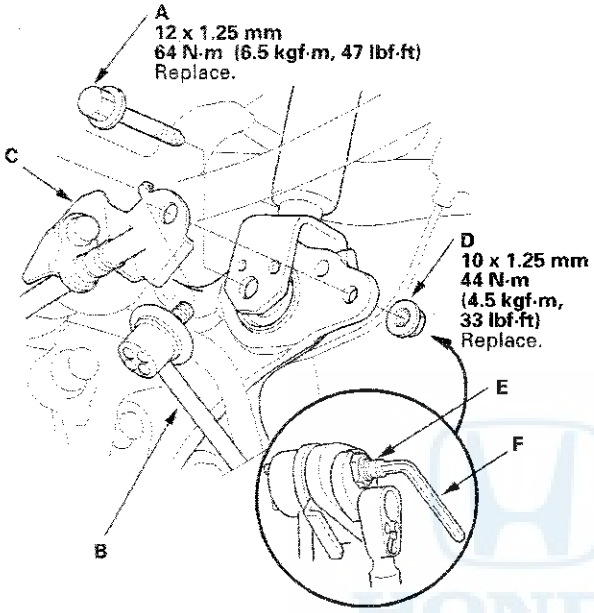

4. Place a floor jack under the connecting point of the knuckle and lower arm A, and raise the suspension to load with the vehicle's weight.

5. Tighten the damper lower mounting bolt and the flange nut while holding the joint pin (E) with the hex wrench (F) to the specified torque values.

6. Tighten the damper mounting nuts on top of the damper to the specified torque value.

7. Install the lid (A), and set the rear seat-back to the original position.

4-door

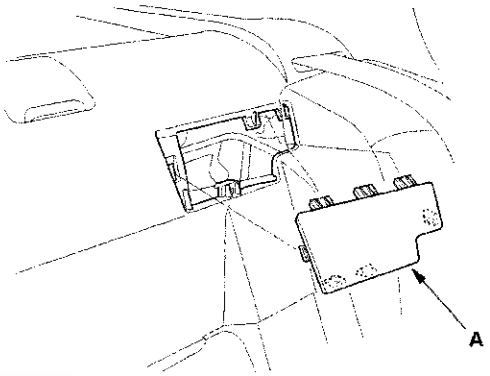

2-door

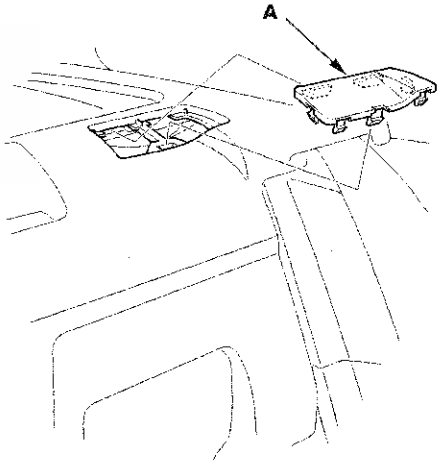

8. Clean the mating surfaces of the brake disc and the inside of the wheel, then install the rear wheel.

9. Check the wheel alignment, and adjust it if necessary (see page 18-5).

Damper/Spring Disassembly, Inspection, and Reassembly

Exploded View

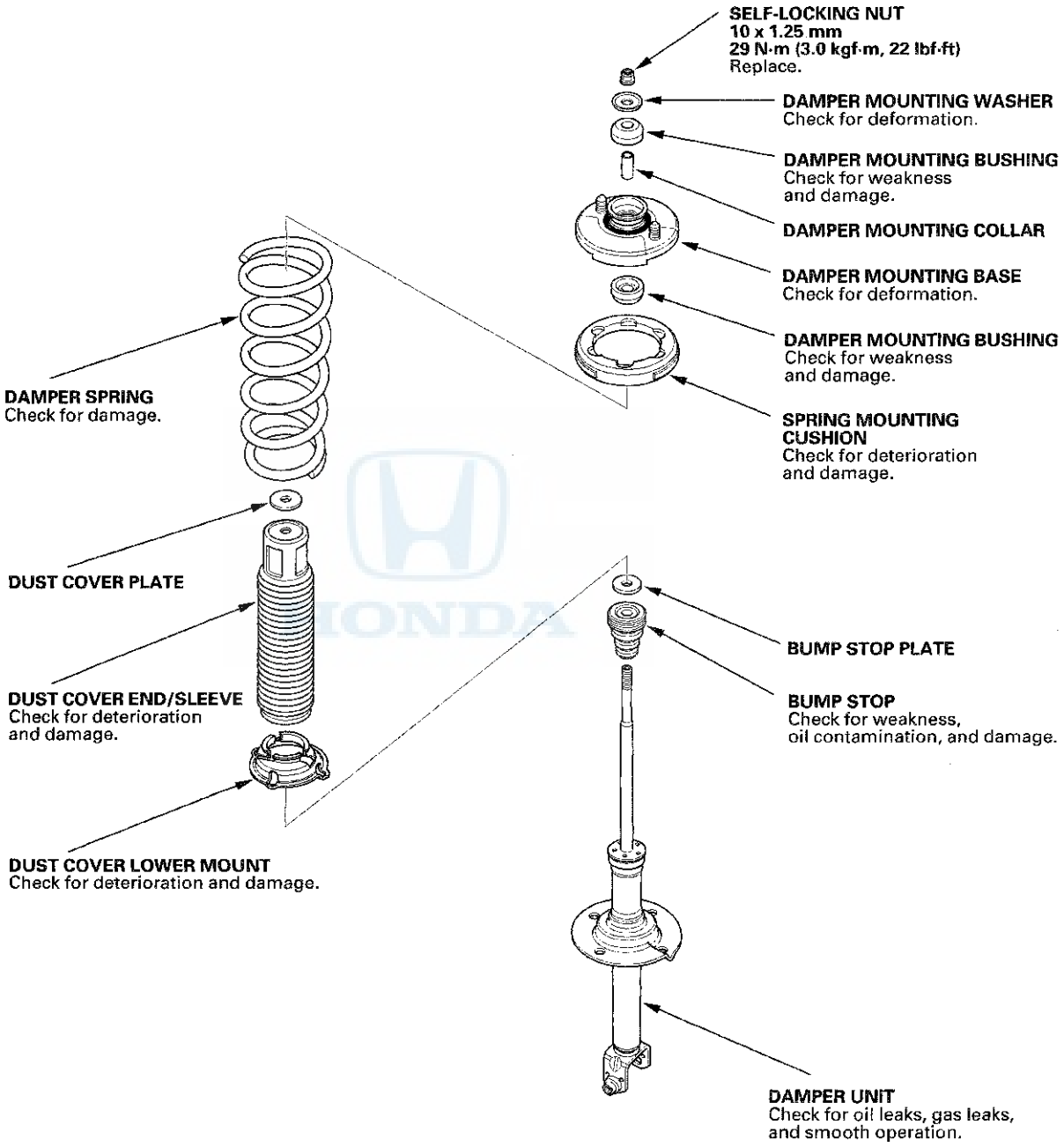

NOTE: When compressing the damper spring, use a commercially available strut spring compressor (Branick MST-580A or Model 7200, or equivalent) according to the manufacturer's instructions.

Disassembly

1. Compress the damper spring, then remove the self-locking nut (A) while holding the damper shaft with a hex wrench (B). Do not compress the damper spring more than necessary to remove the self-locking nut.

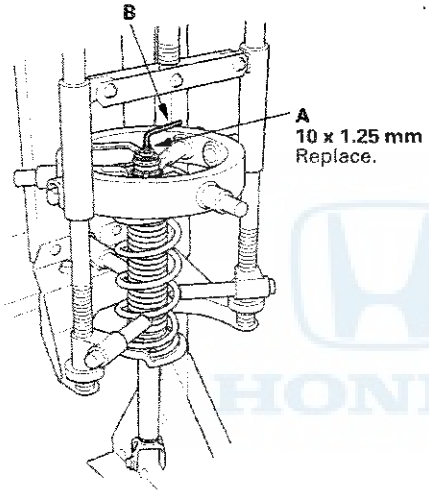

2. Release the pressure from the strut spring compressor, then disassemble the damper as shown in the Exploded View.

Inspection

1. Reassemble all parts, except for the damper spring.

2. Compress the damper assembly by hand, and check for smooth operation through a full stroke, both compression and extension. The damper should extend smoothly and constantly when compression is released. If it does not, the gas is leaking and the damper should be replaced.

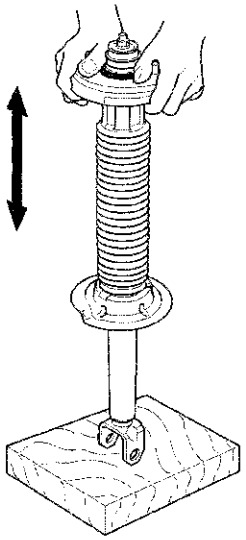

3. Check for oil leaks, abnormal noises, and binding during these tests.

(cont'd)

Damper/Spring Disassembly, Inspection, and Reassembly (cont'd)

Reassembly

1. Install the spring mounting cushion (A) on the damper mounting base (B) by aligning the tabs (C) and notches (D).

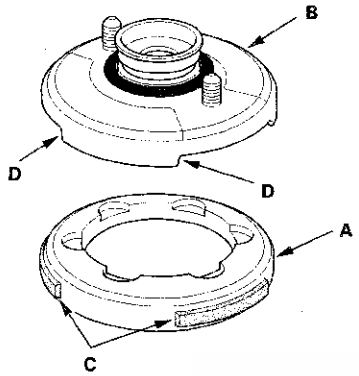

2. Install all the parts except the damper mounting washer and the self-locking nut onto the damper unit by referring to the Exploded View.

3. Compress the damper spring using a strut spring compressor. Do not compress the spring excessively.

4. Align the lower end (A) of the damper spring with the stepped part (B) of the dust cover lower mount and the lower spring seat on the damper unit.

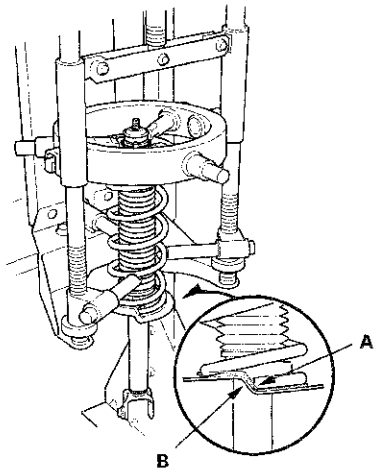

5. Align the angle of the stud (A) on the damper mounting base (B) with the welded nut (C) on the bottom of the damper unit as shown.

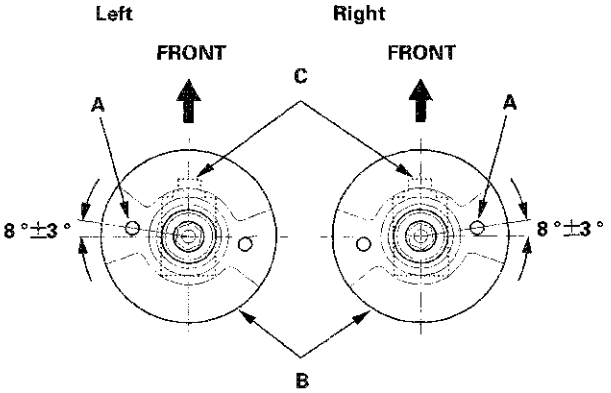

6. Install the damper mounting washer (A), and loosely install the new self-locking nut (B).

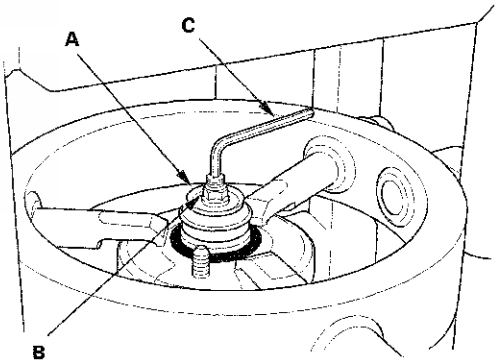

10 x 1.25 mm
29 N·m(3.0 kgf·m, 22 lbf·ft)
Replace.

7. Hold the damper shaft with a hex wrench (C), and tighten the self-locking nut to the specified torque value.

8. Remove the damper/spring from the strut spring compressor.

Navigation Tools: Click on the “Table of Contents” below, or use the Bookmarks to the left.

Suspension

Front and Rear Suspension **18-2**

Front Suspension **18-13**

Rear Suspension **18-38**

TPMS (Tire Pressure Monitoring System)

Component Location Index 18-56
General Troubleshooting Information 18-57
Memorizing the Tire Pressure Sensor ID 18-60
Tire Pressure Sensor Location 18-61
DTC Troubleshooting Index 18-63
Symptom Troubleshooting Index 18-64
System Description 18-65
Circuit Diagram 18-69
DTC Troubleshooting 18-71
Symptom Troubleshooting 18-79
TPMS Control Unit Replacement 18-83
Tire Pressure Sensor Replacement 18-84

Component Location Index

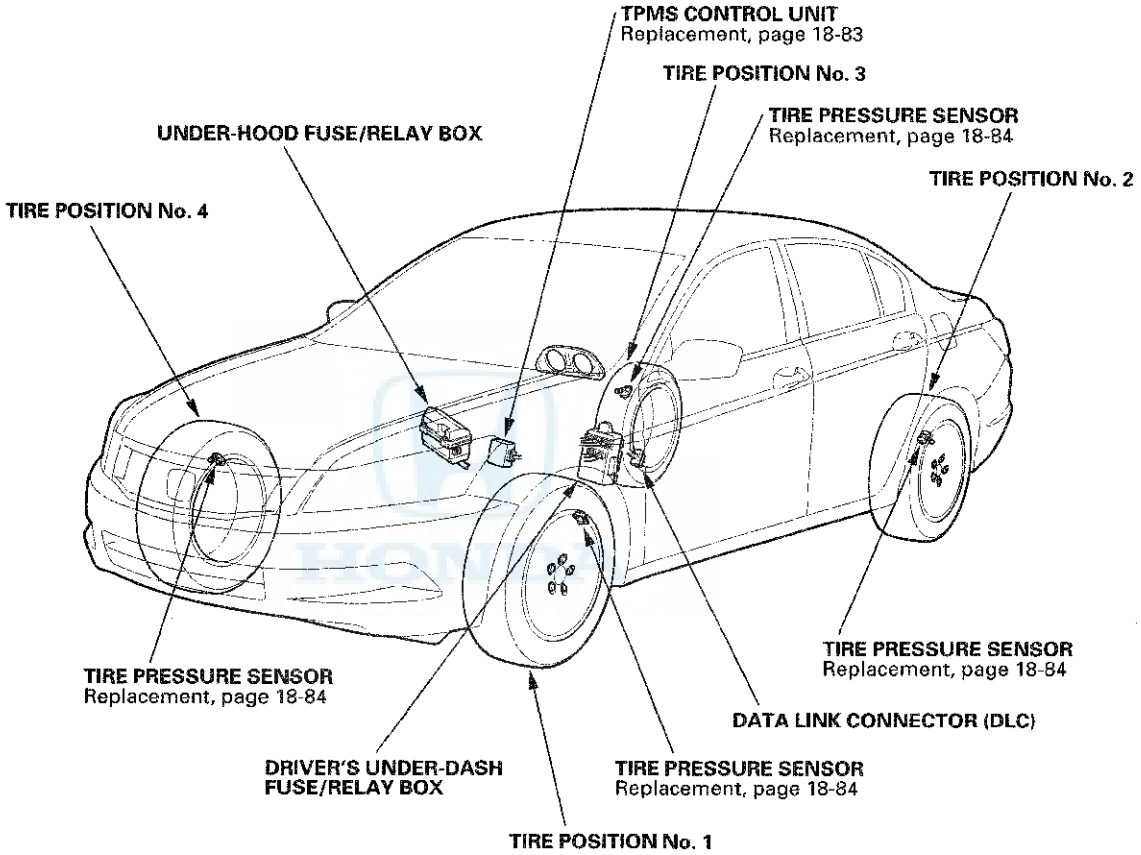

General Troubleshooting Information

System Indicator

The TPMS (tire pressure monitoring system) has the low tire pressure indicator and the TPMS indicator.

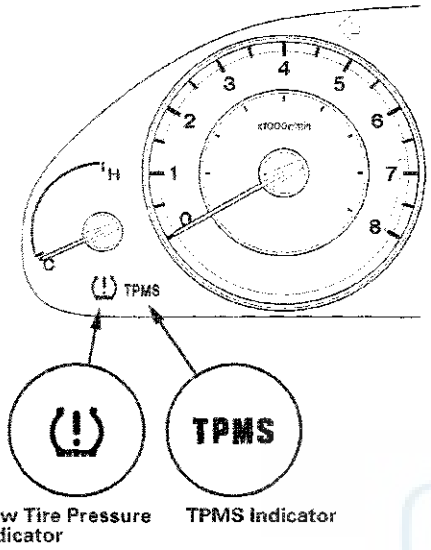

The Low Tire Pressure Indicator

- If the system detects low pressure in any of the four tires, the low tire pressure indicator comes on.
- When this happens, inflate the air and test-drive the vehicle at 28 mph (45 km/h) or more for at least 1 minute, and the low tire pressure indicator will go off.
- If the control unit detects a problem in the system during an indication of low tire pressure, it turns off the low tire pressure indicator, stores the DTC(s), and turns on the TPMS indicator.

The TPMS Indicator

- If a problem is detected in the system, the TPMS indicator comes on.
- If low tire pressure and a problem in the system are detected, only the TPMS indicator comes on.

If the system is OK, the TPMS indicator and the low tire pressure indicator should come on when you turn the ignition switch to ON (II), and then go off 2 seconds later. If they don't, there is a problem with the system.

DTC 11, 13, 15, 17

If the system detects low pressure in any of the four tires, the low tire pressure indicator comes on, and the control unit sets one or more of these codes: DTC 11, 13, 15, 17. When the tire pressure returns to normal, and the TPMS control unit receives the normal pressure signal from the tire pressure sensor, the control unit turns off the indicators.
However TPMS control unit still retains the DTC(s).

NOTE: it is necessary to test-drive the vehicle at 28 mph (45 km/h) or more for at least 1 minute so that tire pressure sensor transmits the signal.

Pressure Changing by Temperature

Tire pressures increase slightly as the temperature in the tires rises during driving.
Pressures can also increase or decrease slightly with changes in outside air temperature.
A temperature change of about 18 °F (10 °C) changes tire pressure by about 10 kPa (0.1 kgf/cm², 1.5 psi). If the temperature drops, tire pressure could decrease just enough to turn on the low tire pressure indicator, but later, the tire temperature could increase enough to turn the indicator off. To resolve a complaint of such intermittent indications, confirm and clear the stored DTC(s) and check the tire pressures. Then explain to the customer how temperature changes can affect the system.

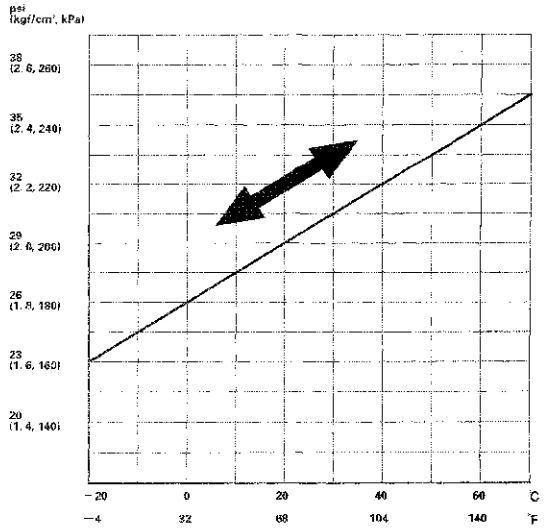

(cont'd)

General Troubleshooting Information (cont'd)

Problems That Are Not System Faults

- Tire Sealant
  Fluid sealant used to repair a punctured tire can damage the tire pressure sensor mounted on each wheel. It can prevent the system from detecting the correct tire pressure, which sets a DTC 11, 13, 15, or 17 even though the system is normal.
- Cold Weather
  When the weather is extremely cold, about −40 °F (−40 °C) or colder, the output of the lithium battery in each tire pressure sensor may drop far enough that the control unit sets a DTC for low battery voltage (31, 33, 35, or 37) even though the system is normal.
- Non-TPMS Wheels (Including Spare Tire)
  Vehicles equipped with TPMS must use wheels made for the system. Every TPMS wheel has an exclusive mark; do not use any other type of wheel.
  When a flat tire is replaced with the spare tire, the TPMS indicator comes on (DTC 32, 34, 36, or 38) because the system is no longer receiving the signal from the flat tire's transmitter.
  This is not a problem with the spare tire.

How a Diagnostic Trouble Code (DTC) is Set

- When the system detects a problem, the TPMS control unit sets a code, but shifts to fail-safe mode, and does not alert the driver to low tire pressures.
- If the TPMS control unit loses power, or fails, the TPMS indicator comes on, but no DTC are set.
- The memory can hold all the DTCs that could possibly be set. However, when the same DTC is detected more than once, the most recent one overwrites the previous one, so only the latest DTC of each type is stored.
- DTCs are indicated in ascending order, not in the order they occurred.
- Set DTCs are stored in the EEPROM (nonvolatile memory), they cannot be cleared by disconnecting the battery. To clear a DTC, connect the HDS (Honda Diagnostic System) to the data link connector (DLC), and follow the screen prompts.

How to Troubleshoot DTCs

DTC troubleshooting procedures assume the cause of the problem is still present and the TPMS indicator is still on. Do not use a troubleshooting procedure unless the system has set the DTC listed for it.

NOTE: For DTCs 11, 13, 15, and 17 (tire low tire pressure), the TPMS indicator comes on only if the DTCs are caused by a system problem rather than low tire pressure.

1. Ask the customer to describe the conditions when the indicator came on, and try to reproduce the same conditions for troubleshooting. Find out if the customer checked and/or adjusted tire pressures since the indicator came on.

2. If an indicator does not come on during the test-drive, check for loose terminals, poor contact due to damaged terminals, etc. before you start troubleshooting.

3. After troubleshooting, repair and clear the DTCs, and test-drive the vehicle. Make sure no indicators come on.

4. Check for DTCs from other control units that are connected via F-CAN. If there are DTCs that are related to F-CAN, the most likely cause was that the ignition switch was turned to ON (II) with the TPMS control unit connector disconnected. Clear the DTCs. Check for PGM-FI and TPMS codes, and troubleshoot those first.

How to Retrieve DTCs

1. With the ignition switch in LOCK (0), connect the HDS (Honda Diagnostic System) to the data link connector (DLC) (A) located under the driver's side of the dashboard.

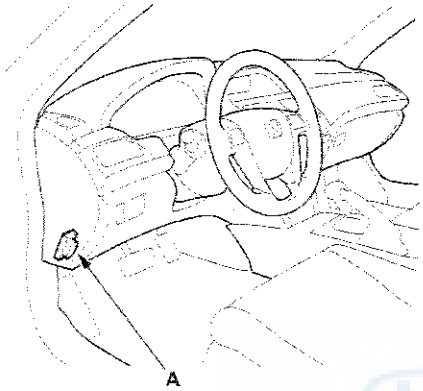

2. Turn the ignition switch to ON (II).
3. Make sure the HDS communicates with the vehicle and the TPMS control unit. If it doesn't, troubleshoot the DLC circuit (see page 11-192).
4. Follow the prompts on the HDS to display the DTC(s) on the screen. After determining the DTC, refer to the DTC troubleshooting.

   NOTE: See the HDS Help menu for specific instructions.
5. Turn the ignition switch to LOCK (0).

How to Clear DTCs

1. With the ignition switch in LOCK (0), connect the HDS to the data link connector (DLC) (A) located under the driver's side of the dashboard.

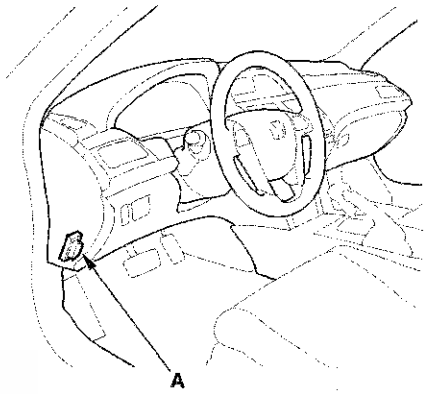

2. Turn the ignition switch to ON (II).
3. Make sure the HDS communicates with the vehicle and the TPMS control unit. If it doesn't, troubleshoot the DLC circuit (see page 11-192).
4. Clear the DTC(s) by following the screen prompts on the HDS.

   NOTE: See the HDS Help menu for specific instructions.
5. Turn the ignition switch to LOCK (0).

Memorizing the Tire Pressure Sensor ID

Special Tools Required
TPMS sensor initializer tool AKS0620006
Available through the Honda Tool and Equipment Program; call 888-424-6857

All four tire pressure sensor IDs must be memorized to the TPMS control unit whenever you do any of these actions:

- Replace the TPMS control unit.
- Replace the tire pressure sensor.
- Substitute a known-good wheel with tire pressure sensor.

NOTE:
- To ensure the control unit memorizes the correct ID, the vehicle with the new sensor must be at least 10 ft (3 m) away from other vehicles that have tire pressure sensors.
- When doing a tire rotation, memorizing the sensors in not needed.

1. With the ignition switch in LOCK (0), connect the HDS to the data link connector (DLC) (A) located under the driver's side of the dashboard.

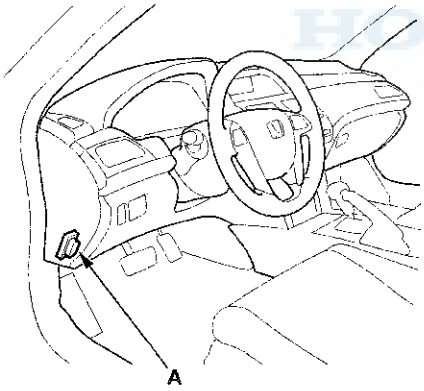

2. Turn the ignition switch to ON (II).

3. Make sure the HDS communicates with the vehicle and the TPMS control unit. If it doesn't, troubleshoot the DLC circuit (see page 11-192).

4. Select Sensor ID Learning from the mode menu on the HDS.

5. Follow HDS screen prompts to turn on the TPMS sensor initializer tool (A). Verify that the power switch (B) is in the "Low" position.

   NOTE: If the power switch is in the "High" position, more than one sensor or sensors on other vehicles may be activated. Make sure the power switch is in the "Low" position.

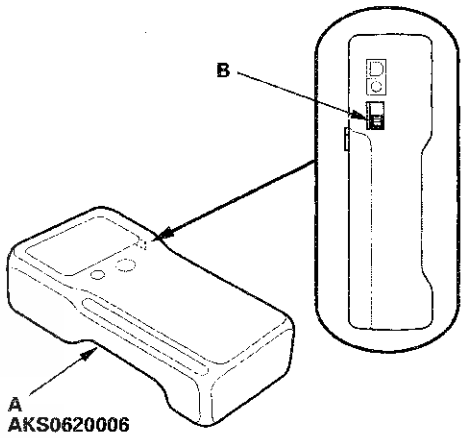

6. Hold the TPMS sensor initializer tool near one wheel, memorize the pressure sensor ID by following the screen prompts on the HDS.

   NOTE:
   - If you turn the ignition switch to LOCK (0) before memorizing all four sensor IDs, the memorizing ID is canceled.
   - If more than one sensor ID is displayed on the HDS, verify that the power switch is in the "LOW" position, the vehicle has not been driven for 5 minutes, and there are no other vehicles within 10 ft (3 m).
   - See the HDS Help menu for specific instructions.

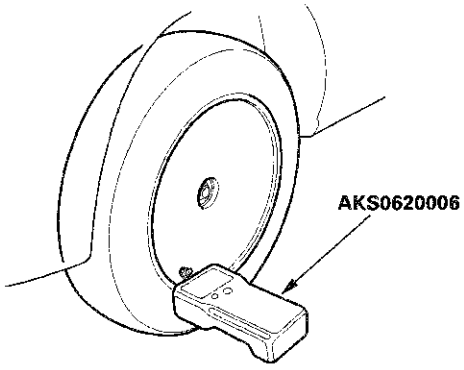

7. Repeat step 6 for each wheel until all four sensor IDs are memorized. When all four IDs are memorized, the low tire pressure indicator blinks.

8. Turn the ignition switch to LOCK (0).

9. Disconnect the HDS from the DLC.

10. Test-drive the vehicle at 28 mph (45 km/h) or more for at least 1 minute.

11. Make sure the low tire pressure indicator does not blink.

12. Make sure the tires are inflated to the specified tire pressure listed on the doorjamb sticker.

Tire Pressure Sensor Location

Special Tools Required
TPMS sensor initializer tool AKS0620006
Available through the Honda Tool and Equipment Program; call 888-424-6857

NOTE:
- This procedure locates where the tire pressure sensors 1, 2, 3, 4 are mounted, when activated by the TPMS sensor initializer tool.
- Position the vehicle at least 10 ft (3 m) away from other vehicles that have tire pressure sensors.

1. With the ignition switch in LOCK (0), connect the HDS to the data link connector (DLC) (A) located under the driver's side of the dashboard.

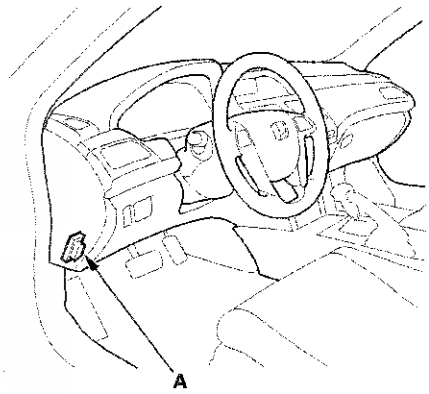

2. Turn the ignition switch to ON (II).

3. Make sure the HDS communicates with the vehicle and the TPMS control unit. If it doesn't, troubleshoot the DLC circuit (see page 11-192).

4. Select Function Test from the mode menu, then select Sensor Position Check on the HDS.

(cont'd)

Tire Pressure Sensor Location (cont'd)

5. Follow HDS screen prompts to turn on the TPMS sensor initializer tool (A). Verify that the power switch (B) is in the "Low" position.

   NOTE: If the power switch is in the "High" position, more than one sensor or sensors on other vehicles may be activated. Make sure the power switch is in the "Low" position.

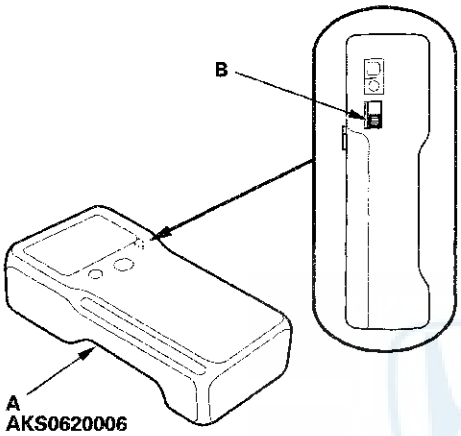

6. Follow the prompts on the HDS to activate the tire pressure sensors using the TPMS sensor initializer tool. Start with the left-front (LF) wheel.

   NOTE:
   - See the HDS Help menu for specific instructions.
   - Initialize the wheel in the sequence shown.

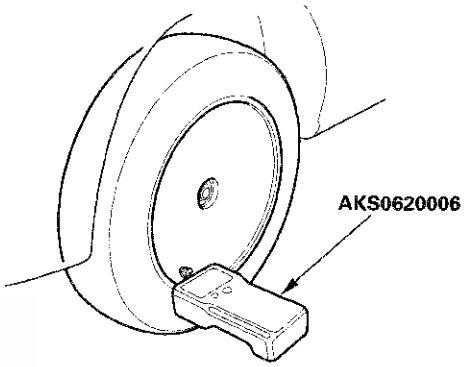

INITIALIZATION SEQUENCE :

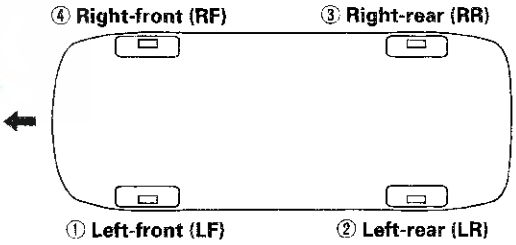

7. Check the HDS screen, and note the active sensor reception order of tire pressure sensor 1, 2, 3, 4.

   NOTE:
   - If the sensor does not respond to the TPMS sensor initializer tool, make sure the tool was turned on properly. Refer to the HDS.
   - If the tool start mode is OK, then rotate the tire 1/4 turn and retry.
   - If the sensor still does not respond after one full rotation of the tire, then check for DTC 32, 34, 36, and 38 with the HDS.

8. Turn the ignition switch to LOCK (0).

DTC Troubleshooting Index

DTC	Detection Item	Troubleshooting
11	Tire 1 Low Air Pressure	(see page 18-71)
13	Tire 2 Low Air Pressure	(see page 18-71)
15	Tire 3 Low Air Pressure	(see page 18-71)
17	Tire 4 Low Air Pressure	(see page 18-71)
21	Tire 1 Pressure Sensor Abnormally High Temperature	(see page 18-72)
22	Tire 2 Pressure Sensor Abnormally High Temperature	(see page 18-72)
23	Tire 3 Pressure Sensor Abnormally High Temperature	(see page 18-72)
24	Tire 4 Pressure Sensor Abnormally High Temperature	(see page 18-72)
31	Tire 1 Pressure Sensor Low Battery Voltage	(see page 18-73)
32	Tire 1 Pressure Sensor Signal Failure	(see page 18-74)
33	Tire 2 Pressure Sensor Low Battery Voltage	(see page 18-73)
34	Tire 2 Pressure Sensor Signal Failure	(see page 18-74)
35	Tire 3 Pressure Sensor Low Battery Voltage	(see page 18-73)
36	Tire 3 Pressure Sensor Signal Failure	(see page 18-74)
37	Tire 4 Pressure Sensor Low Battery Voltage	(see page 18-73)
38	Tire 4 Pressure Sensor Signal Failure	(see page 18-74)
41	Abnormal Signal Reception Error	(see page 18-75)
51	Tire 1 Pressure Sensor Registration Error	(see page 18-75)
53	Tire 2 Pressure Sensor Registration Error	(see page 18-75)
55	Tire 3 Pressure Sensor Registration Error	(see page 18-75)
57	Tire 4 Pressure Sensor Registration Error	(see page 18-75)
81	TPMS Control Unit Failure	(see page 18-76)
83	No VSP Signal	(see page 18-77)
85	F-CAN Communication Failure	(see page 18-77)
91	Tire 1 Pressure Sensor Internal Error	(see page 18-78)
93	Tire 2 Pressure Sensor Internal Error	(see page 18-78)
95	Tire 3 Pressure Sensor Internal Error	(see page 18-78)
97	Tire 4 Pressure Sensor Internal Error	(see page 18-78)

Symptom Troubleshooting Index

Symptom	Diagnostic procedure	Also check for
HDS does not communicate with the TPMS control unit or the vehicle	Troubleshooting the DLC circuit (see page 11-192)	
Low tire pressure indicator does not come on, and no DTCs are stored	Symptom Troubleshooting (see page 18-79)	
Low tire pressure indicator does not go off, and no DTCs are stored	Symptom Troubleshooting (see page 18-80)	
TPMS indicator does not come on, and no DTCs are stored	Symptom Troubleshooting (see page 18-81)	
TPMS indicator does not go off, and no DTCs are stored	Symptom Troubleshooting (see page 18-81)	

System Description

TPMS Control Unit Inputs and Outputs for 20P Connector

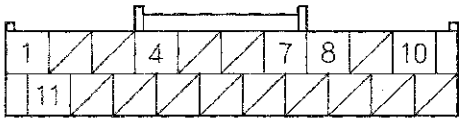

Wire side of female terminals

Terminal number	Wire color	Terminal sign (Terminal name)	Description	Signal
1	WHT	CAN H (F-CAN communication signal high)	F-CAN communication circuit	Ignition switch ON (II): pulses
4	BLK	GND (Ground)	Ground for the TPMS control unit	Less than 0.1 V at all times
7	LT BLU	K-LINE (Data link connector)	Communications with the HDS	———
8	BRN	IG1 (Ignition switch 1)	Power source for activating the system	Ignition switch ON (II): battery voltage Ignition switch in LOCK (0): less than 0.1 V
10	WHT	+B (Battery positive)	Power source for the TPMS control unit	Battery voltage at all times
11	RED	CAN L (F-CAN communication signal low)	F-CAN communication circuit	Ignition switch ON (II): pulses

(cont'd)

System Description (cont'd)

System Structure

Once the vehicle speed exceeds 28 mph (45 km/h), the TPMS control unit monitors all four tire pressure sensors and the system function. If it detects low pressure in a tire, it alerts the driver by turning on the low tire pressure indicator. If it detects a problem in the system, it turns on the TPMS indicator.

Control unit
Mounted over the accelerator pedal module, the TPMS control unit receives wireless pressure sensor ID signals every time the vehicle speeds exceeds 28 mph (45 km/h). It also receives wireless signals from the transmitters for tire pressure and the sensor condition, and it continuously monitors and controls the system. The TPMS control unit cannot directly determine the position (location) of a tire pressure sensor(s) on the vehicle since it is a wireless system. The TPMS control unit assumes a sensor is in the same location on the vehicle as it was when it was last memorized. TPMS sensor locations will change during scheduled vehicle maintenance (tire rotation).

NOTE: To determine the actual location of each TPMS wheel sensor on the vehicle, do the tire pressure sensor location procedure (see page 18-61). Once the tire pressure sensor locations are identified, write the sensor ID on the side wall of the tire with a tire crayon to eliminate confusion.

Indicators
Two indicators are in the gauge control module: The low tire pressure indicator comes on when any tire pressure is low, and the TPMS indicator that comes on only if there's a problem with the system.
The low tire pressure indicator alerts the driver that a tire(s) pressure is low, but does not specify the tire(s) location.

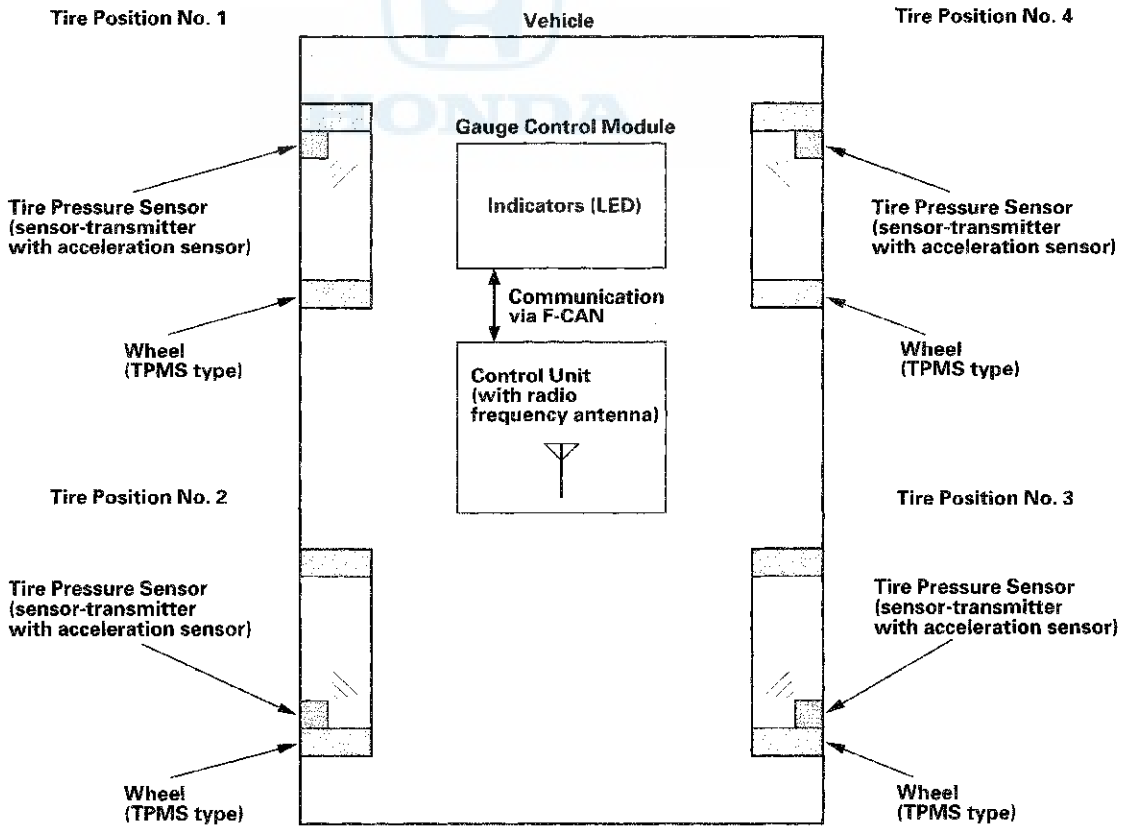

Tire pressure sensor

Each sensor is an integrated unit made up of the tire valve stem, a pressure sensor, and a transmitter. The unit is attached to the inside of the wheel, around the valve stem. The sensor transmits the internal tire information to the control unit once every 60 seconds when the vehicle speed exceeds 28 mph (45 km/h). When the TPMS control unit receives a tire pressure signal that is less than 168 kPa (1.7 kgf/cm^2, 24 psi) with 16 inch wheels, or 175 kPa (1.8 kgf/cm^2, 25 psi) with 17 inch wheels, the TPMS control unit then turns on the low tire pressure indicator. When that tire's pressure is increased to more than 190 kPa (1.9 kgf/cm^2, 28 psi) with 16 inch wheels, or 200 kPa (2.0 kgf/cm^2, 29 psi) with 17 inch wheels, and the vehicle is driven above 28 mph (45 km/h) the transmitter sends the tire pressure signal to the control unit, and then the control unit turns the indicator off.

NOTE: Do not mix the TPMS tire pressure sensors or wheels with other TPMS types. Be sure to use the correct type sensors and wheels for this system.
Sensor are active:

- When the wheel rotates over 28 mph (45 km/h) the sensor detects the momentum, and switches the sensor to the normal function mode.
- The LF (low frequency) signal of the TPMS initializer tool makes the sensor active even though the vehicle is stopped. The tire pressure sensor goes into sleep mode when the acceleration sensor detects the wheel is stationary for 5 minutes or more.

Wheels

The TPMS will not work unless TPMS type wheels are installed on the vehicle. There are six different type of wheels used.

- Aluminum wheel type: The original equipment wheels have a "TPMS", "TA0", or "TE0" mark (A) on them. The wheels also have counterweights (B) incorporated on the opposite side of the tire pressure sensor (C), to counterbalance the weight of the sensor.
- Steel wheel type: The original equipment wheels have a "TPMS" mark (A) on them, and a counterweight (B) balances the weight of the tire pressure sensor (C) by a size difference in the wheel disc holes.

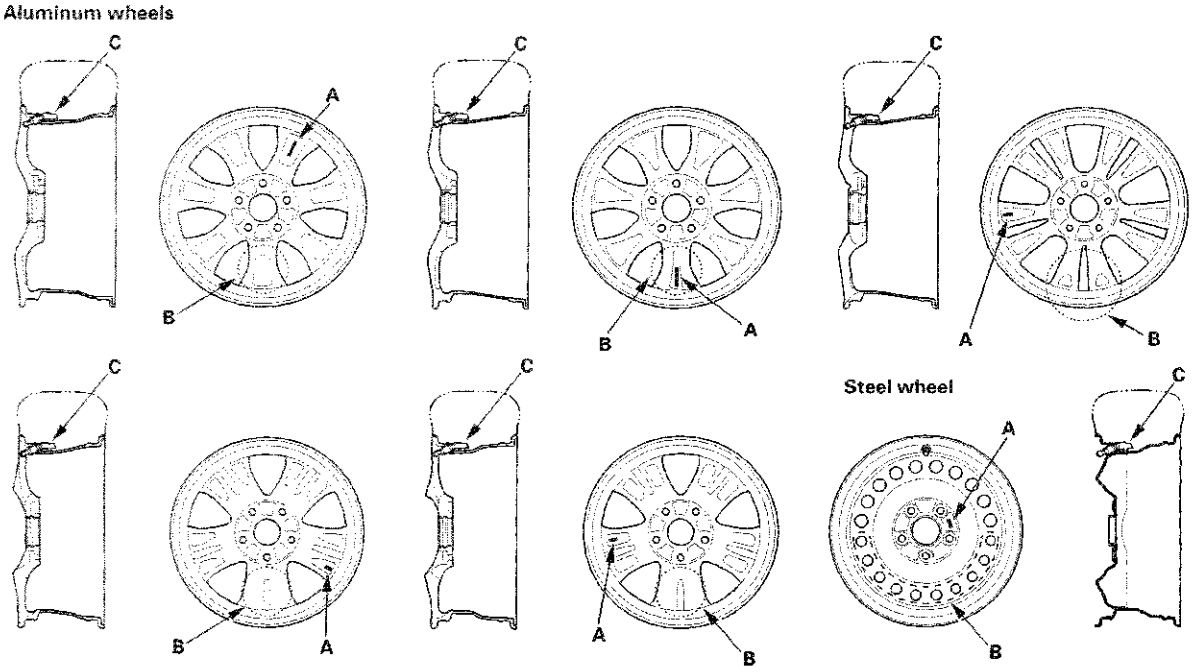

(cont'd)

System Description (cont'd)

System Communication

- When the vehicle is traveling more than 28 mph (45 km/h), an RF (radio frequency) band wave signal is transmitted from each tire pressure sensor to the control unit.
- When the wheels rotate, the tire pressure sensors momentum is detected, switching them from sleep mode to normal function (awake) mode. After the vehicle is stationary for 5 minutes, the sensors switch from normal function mode back to sleep mode to extend their battery life.
- Each tire pressure sensor has its own ID to prevent jamming by similar systems on other vehicles. After memorizing all the sensor IDs, the control unit recognizes only those specific signals.
- An ID cannot be memorized automatically. The control unit knows which ID belongs to each tire pressure sensor. This recurring ID confirmation prevents any confusion in the system as a result of normal tire rotation.

NOTE: Be careful not to bend the brackets on the TPMS control unit. Misalignment of the control unit could interfere with sending and receiving signals.

Control Unit
(with an internal Radio Frequency Antenna)

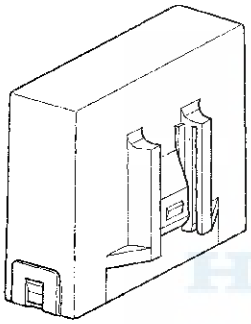

Tire Pressure Sensor
(Sensor-transmitter with acceleration sensor)

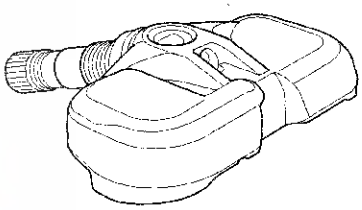

Circuit Diagram

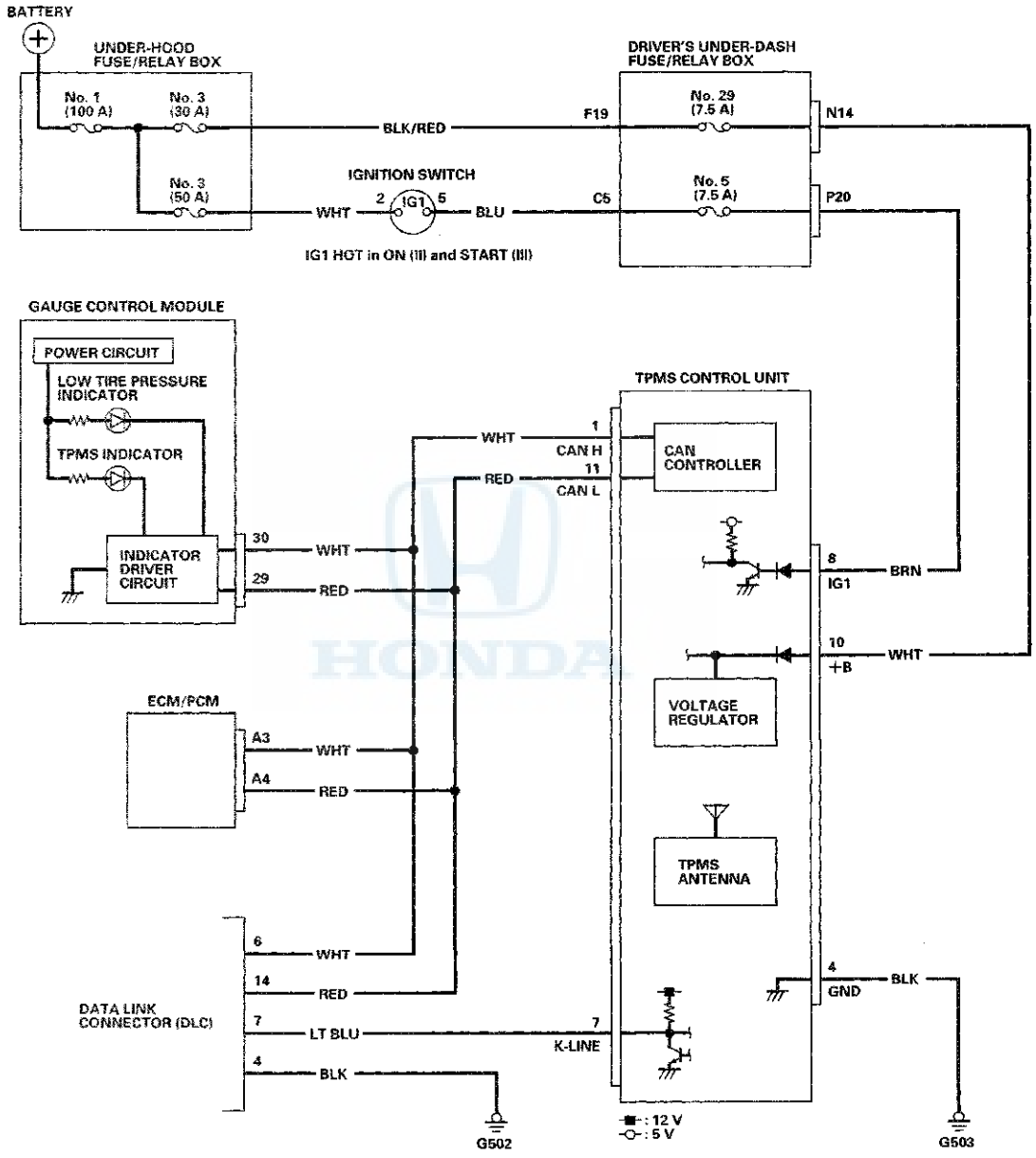

(cont'd)

Circuit Diagram (cont'd)

DRIVER'S UNDER-DASH FUSE/RELAY BOX CONNECTOR N (16P)

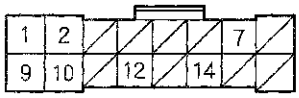

Wire side of female terminals

DRIVER'S UNDER-DASH FUSE/RELAY BOX CONNECTOR P (20P)

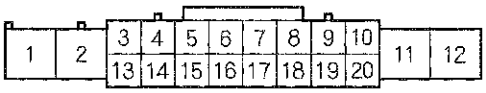

Wire side of female terminals

GAUGE CONTROL MODULE 32P CONNECTOR

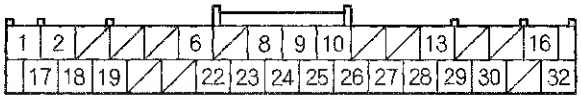

Wire side of female terminals

TPMS CONTROL UNIT 20P CONNECTOR

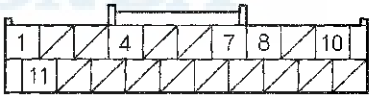

Wire side of female terminals

ECM/PCM CONNECTOR A (49P)

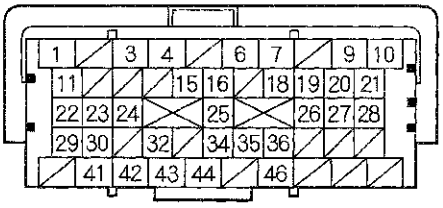

Terminal side of female terminals

DATA LINK CONNECTOR (DLC)

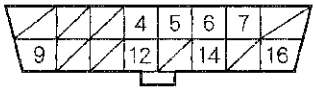

Terminal side of female terminals

DTC Troubleshooting

DTC 11, 13, 15, 17: Tire Low Air Pressure

NOTE: If low tire pressure is detected, the control unit sets one or more of these DTCs, and turns on the low tire pressure indicator. If the low tire pressure indicator comes on due to true low tire pressure, and the customer corrects it before bringing the vehicle in, the DTCs will have been stored, but the indicator will be off.

1. Turn the ignition switch to LOCK (0).
2. Make sure the tires are inflated to the specified tire pressure listed on the doorjamb sticker.
3. Test-drive the vehicle at 28 mph (45 km/h) or more for at least 1 minute.

   Does the low tire pressure indicator go off?

   YES—The system is OK at this time. Check for and repair the cause of air loss.■

   NO—Go to step 4.
4. Check for DTCs with the HDS.
5. Note the tire pressure sensor(s) number by the indicated DTC.

DTC	Tire Pressure Sensor Number
11	No. 1
13	No. 2
15	No. 3
17	No. 4

6. Do the tire pressure sensor location procedure to determine the affected tire location and relate it to the tire pressure sensor number (see page 18-61).
7. Check the TIRE 1, TIRE 2, TIRE 3, or TIRE 4 AIR PRESSURE in the TPMS DATA LIST with the HDS, and compare it with the actual measured tire pressure.

   Is the indicated tire pressure on the HDS within 40 kPa (0.4 kgf/cm², 6 psi) of the actual tire pressure?

   YES—Go to step 8.

   NO—Replace the appropriate tire pressure sensor (see page 18-84).■
8. Clear the DTC with the HDS.
9. Test-drive the vehicle at 28 mph (45 km/h) or more for at least 1 minute.
10. Check for DTCs with the HDS.

    Is DTC 11, 13, 15, or 17 indicated?

    YES—Replace the TPMS control unit (see page 18-83).■

    NO—If any other DTCs are indicated, troubleshoot the appropriate DTC. If no DTCs are indicated, the system is OK at this time.■

DTC Troubleshooting (cont'd)

DTC 21, 22, 23, 24: Tire Pressure Sensor Abnormally High Temperature

1. Turn the ignition switch to LOCK (0).

2. Make sure the tires have cooled down.

   NOTE: An abnormal rise in the internal temperature of the tires can be caused by
   - Excessive braking
   - Failure to release the parking brake (rear tires only)
   - Leaving the vehicle running while parked (front tires only)
   - Improper assembly of a wheel and tire

3. Test-drive the vehicle at 28 mph (45 km/h) or more for at least 1 minute.

   Does the TPMS indicator go off?

   YES—The system is OK at this time. Clear the DTC with the HDS. ■

   NO—Go to step 4.

4. Check for DTCs with the HDS.

5. Note the tire pressure sensor(s) number by the indicated DTC.

DTC	Tire Pressure Sensor Number
21	No. 1
22	No. 2
23	No. 3
24	No. 4

6. Do the tire pressure sensor location procedure to determine the affected tire location and relate it to the tire pressure sensor number (see page 18-61).

7. Check the TIRE 1, TIRE 2, TIRE 3, or TIRE 4 AIR TEMPERATURE in the TPMS DATA LIST with the HDS.

   Is 176 °F (80 °C) or more indicated?

   YES—Replace the appropriate tire pressure sensor (see page 18-84). ■

   NO—Go to step 8.

8. Clear the DTC with the HDS.

9. Test-drive the vehicle at 28 mph (45 km/h) or more for at least 1 minute.

10. Check for DTCs with the HDS.

    Is DTC 21, 22, 23, or 24 indicated?

    YES—Check for loose terminals and poor connections at the TPMS control unit. If necessary, substitute a known-good TPMS control unit (see page 18-83), and recheck. ■

    NO—If any other DTCs are indicated, troubleshoot the appropriate DTC. If no DTC are indicated, the system is OK at this time. ■

DTC 31, 33, 35, 37: Tire Pressure Sensor Low Battery Voltage

NOTE: This problem occurs when the temperature around the sensor is −40 °F (−40 °C) or less. Note that the diagnosis must be made in a place where ambient temperature is −40 °F (−40 °C) or more.

1. Test-drive the vehicle at 28 mph (45 km/h) or more for at least 1 minute.

   Does the TPMS indicator go off?

   YES—The system is OK at this time. Clear the DTC with the HDS. ■

   NO—Go to step 2.

2. Check for DTCs with the HDS.

3. Note the tire pressure sensor(s) number by the indicated DTC.

DTC	Tire Pressure Sensor Number
31	No. 1
33	No. 2
35	No. 3
37	No. 4

4. Do the tire pressure sensor location procedure to determine the affected tire location and relate it to the tire pressure sensor number (see page 18-61).

   Did each tire pressure sensor respond to the TPMS initializer tool?

   YES—Go to step 5.

   NO—Check that the tire pressure sensor is properly mounted. If necessary, replace the appropriate tire pressure sensor (see page 18-84). ■

5. Check the TIRE 1, TIRE 2, TIRE 3, or TIRE 4 PRESSURE SENSOR TRANSMITTER BATTERY in the TPMS DATA LIST with the HDS.

   Is LOW indicated?

   YES—Replace the appropriate tire pressure sensor (see page 18-84). ■

   NO—Check for loose terminals and poor connections at the TPMS control unit. If necessary, substitute a known-good TPMS control unit (see page 18-83), and recheck. ■

DTC Troubleshooting (cont'd)

DTC 32, 34, 36, 38: Tire Pressure Sensor Signal Failure

NOTE: Inspect for an aftermarket electrical device interfering with the RF signal from the sensors when driving the vehicle (inverter, battery charger, radiotelegraph, etc).

1. Turn the ignition switch to LOCK (0).

2. Make sure all four wheels are TPMS wheels with the mounted tire pressure sensors.

   Are TPMS type wheels with a tire pressure sensor mounted on the vehicle?

   YES—Go to step 3.

   NO—Install the TPMS wheel, and then memorize the pressure sensor ID with the HDS (see page 18-60).■

3. Turn the ignition switch to ON (II).

4. Check for DTCs with the HDS.

5. Note the tire pressure sensor(s) number by the indicated DTC.

DTC	Tire Pressure Sensor Number
32	No. 1
34	No. 2
36	No. 3
38	No. 4

6. Do the tire pressure sensor location procedure to determine the affected tire location and relate it to the tire pressure sensor number (see page 18-61).

   Did each tire pressure sensor respond to the TPMS initializer tool?

   YES—Go to step 7.

   NO—Check for an aftermarket electrical device interfering with the RF signals from the sensors. If there are no electrical devices causing interference, replace the appropriate tire pressure sensor (see page 18-84).■

7. Turn the ignition switch to LOCK (0), and wait 5 minutes or more.

8. Test-drive the vehicle at 28 mph (45 km/h) or more for at least 1 minute.

9. Check the TIRE No. 1, TIRE No. 2, TIRE No. 3, or TIRE No. 4 PRESSURE SENSOR TRANSMITTER STATUS in the TPMS DATA LIST with the HDS.

   Is NORMAL indicated for all four tires within one full turn of each tire?

   YES—The system is OK at this time. Clear the DTC with the HDS.■

   NO—Replace the appropriate tire pressure sensor (see page 18-84).■

DTC 41: Abnormal Signal Reception Error

NOTE:
- Inspect for an aftermarket electrical device interfering with the RF signal from the sensors when driving the vehicle (inverter, battery charger, radio telegraph, etc).
- If DTC 32, 34, 36, or 38 is also set, troubleshoot those DTCs first.

1. Turn the ignition switch to LOCK (0).

2. Make sure all four wheels are TPMS wheels with properly mounted tire pressure sensors.

   Are TPMS type wheels with tire pressure sensors mounted on the vehicle?

   YES—Go to step 3.

   NO—Install the TPMS wheel, and then memorize the pressure sensor ID with the HDS (see page 18-60). ■

3. Memorize the tire pressure sensor IDs with the HDS (see page 18-60).

   Did each tire pressure sensor respond to the TPMS initializer tool?

   YES—The system is OK at this time, clear the DTC with the HDS. ■

   NO—Replace the TPMS control unit (see page 18-83). ■

DTC 51, 53, 55, 57: Tire Pressure Sensor Registration Error

NOTE:
- There DTCs will only set during initialization with the HDS.
- Inspect for an aftermarket electrical device interfering with the RF signal from the sensors when driving the vehicle (inverter, battery charger, radiotelegraph, etc).

1. Turn the ignition switch to LOCK (0).

2. Make sure all four wheels are TPMS wheels with the mounted tire pressure sensors.

   Are TPMS type wheels with a tire pressure sensor mounted on the vehicle?

   YES—Go to step 3.

   NO—Install the TPMS wheel, and then memorize the pressure sensor ID with the HDS (see page 18-60). ■

3. Turn the ignition switch to ON (II).

4. Check for DTCs with the HDS.

5. Note the tire pressure sensor(s) number by the indicated DTC.

DTC	Tire Pressure Sensor Number
51	No. 1
53	No. 2
55	No. 3
57	No. 4

(cont'd)

DTC Troubleshooting (cont'd)

6. Do the tire pressure sensor location procedure to determine the affected tire location and relate it to the tire pressure sensor number (see page 18-61).

   Did each tire pressure sensor respond to the TPMS initializer tool?

   YES—Go to step 7.

   NO—Check for an aftermarket electrical device interfering with the RF signals from the sensors. If there are no electrical devices causing interference, replace the appropriate tire pressure sensor (see page 18-84). ■

7. Turn the ignition switch to LOCK (0), and wait 5 minutes or more.

8. Test-drive the vehicle at 28 mph (45 km/h) or more for at least 1 minute.

9. Check for DTCs with the HDS.

   Is DTC 51, 53, 55, or 57 indicated?

   YES—Check for loose terminals and poor connections at the TPMS control unit. If necessary, substitute a known-good TPMS control unit (see page 18-83), and recheck. ■

   NO—The system is OK at this time. Clear the DTC with the HDS. ■

DTC 81: TPMS Control Unit Failure

NOTE: Low battery voltage can cause this DTC. Make sure the battery is fully charged and in good condition (see page 22-88).

1. Turn the ignition switch to ON (II).

2. Clear the DTC with the HDS.

3. Turn the ignition switch to LOCK (0), then turn the ignition switch to ON (II) again.

4. Check for DTCs with the HDS.

   Is DTC 81 indicated?

   YES—Replace the TPMS control unit (see page 18-83). ■

   NO—The system is OK at this time. Check for loose terminals and poor connections at the TPMS control unit. ■

DTC 83: No VSP Signal

NOTE: If DTC 85 stored at the same time as DTC 83, troubleshoot DTC 85 first, then recheck for DTC 83.

1. Turn the ignition switch to ON (II).
2. Clear the DTC with the HDS.
3. Test-drive the vehicle at 7 mph (10 km/h) or more.
4. Check the speedometer.

   Does the speedometer register speed?

   YES—Go to step 5.

   NO—Update the ECM/PCM if it does not have the latest software (see page 11-215), or substitute a known-good ECM/PCM (see page 11-7), then go to step 1 and recheck. If the ECM/PCM was updated and DTCs are not indicated, troubleshooting is complete. If the ECM/PCM was substituted and DTCs are not indicated, replace the original ECM/PCM (see page 11-216).■

5. Check the VEHICLE SPEED in the TPMS DATA LIST with the HDS.

   Is the vehicle speed indicated?

   YES—The system is OK at this time.■

   NO—Substitute a known-good TPMS control unit (see page 18-83), and recheck.■

DTC 85: F-CAN Communication Failure

NOTE: Check the fuel and emission systems DTCs with the HDS, and troubleshoot the ECM/PCM and F-CAN communication errors first (see page 11-3).

1. Turn the ignition switch to ON (II).
2. Clear the DTC with the HDS.
3. Turn the ignition switch to LOCK (0), then turn the ignition switch to ON (II) again.
4. Wait about 5 seconds.
5. Check for DTCs with the HDS.

   Is DTC 85 indicated?

   YES—Go to step 6.

   NO—The system is OK at this time. Check for loose terminals and poor connections at the TPMS control unit.■

6. Test-drive the vehicle.

   Does the speedometer work?

   YES—Go to step 10.

   NO—Go to step 7.

7. Turn the ignition switch to LOCK (0).
8. Disconnect the TPMS control unit 20P connector.
9. Test-drive the vehicle.

   Does the speedometer work?

   YES—Check for loose terminals and poor connections at the TPMS control unit. If necessary, substitute a known-good TPMS control unit (see page 18-83), and recheck.■

   NO—Turn the ignition switch to LOCK (0), and reconnect all connectors, then check and troubleshoot the fuel and emissions systems (see page 11-3).■

(cont'd)

DTC Troubleshooting (cont'd)

10. Turn the ignition switch to LOCK (0).

11. Short the SCS line with the HDS.

12. Disconnect ECM/PCM connector A (49P).

13. Disconnect the TPMS control unit 20P connector.

14. Check for continuity between the TPMS control unit 20P connector terminals and the ECM/PCM connector A (49P) terminals individually (see table).

Terminal Name	TPMS Control Unit 20P Connector Terminal	ECM/PCM Connector A (49P) Terminal
CAN L	No. 11	No. 4
CAN H	No. 1	No. 3

TPMS CONTROL UNIT 20P CONNECTOR
Wire side of female terminals

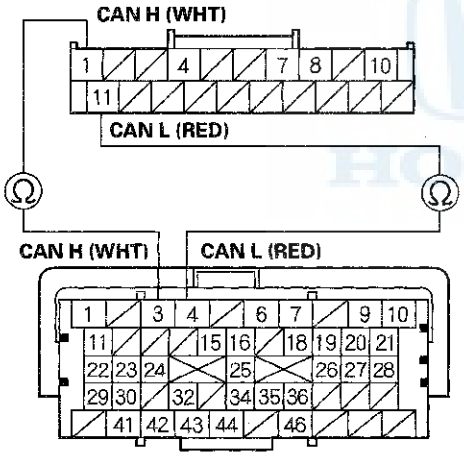

ECM/PCM CONNECTOR A (49P)
Terminal side of female terminals

Is there continuity?

YES—Check for loose terminals and poor connections at the TPMS control unit and G503. If necessary, substitute a known-good TPMS control unit (see page 18-83), and recheck. ■

NO—Repair open in the wire between the TPMS control unit and the ECM/PCM. ■

DTC 91, 93, 95, 97: Tire Pressure Sensor Internal Error

1. Turn the ignition switch to ON (II).

2. Check for DTCs with the HDS.

3. Note the tire pressure sensor(s) number by the indicated DTC.

DTC	Tire Pressure Sensor Number
91	No. 1
93	No. 2
95	No. 3
97	No. 4

4. Do the tire pressure sensor location procedure to determine the affected tire location and relate it to the tire pressure sensor number (see page 18-61).

   Did each tire pressure sensor respond to the TPMS initializer tool?

   YES—Go to step 5.

   NO—Check that the tire pressure sensor is properly mounted. If necessary, replace the appropriate tire pressure sensor (see page 18-84). ■

5. Clear the DTC with the HDS.

6. Test-drive the vehicle at 28 mph (45 km/h) or more for at least 1 minute.

7. Check for DTCs with the HDS.

   Is DTC 91, 93, 95, or 97 indicated?

   YES—Replace the appropriate tire pressure sensor (see page 18-84) and recheck. If DTCs are still present, substitute a known-good TPMS control unit (see page 18-83), and recheck. ■

   NO—If any other DTCs are indicated, troubleshoot the appropriate DTC. If no DTCs are indicated, the system is OK at this time. ■

Symptom Troubleshooting

Low tire pressure indicator does not come on, and no DTCs are stored

NOTE: Check for gauge DTCs with the HDS (see page 22-3). If gauge DTCs are stored, troubleshoot those DTCs first.

1. Turn the ignition switch to ON (II).

2. Check the low tire pressure indicator for several seconds when the ignition switch is turned to ON (II).

   Did the indicator come on and then go off?

   YES—Go to step 3.

   NO—Do the troubleshooting for the gauge control module (see page 22-304). If necessary, substitute a known-good gauge control module (see page 22-324), and recheck.■

3. Test-drive the vehicle at 28 mph (45 km/h) or more for at least 1 minute.

4. Stop the vehicle, and lower the pressure in each tire until the low tire pressure indicator comes on (see table).

   NOTE:
   - Reinflate the tire before continuing to the next tire.
   - After noting whether the low tire pressure indicator came on, make sure it goes off when you reinflate the tire before proceeding to the next tire.
   - If 5 minutes has passed since finishing the last test-drive, reactivate the appropriate tire pressure sensor using the TPMS sensor initializer tool (see page 18-61).

Model	Specified Tire Pressure Lower Limit
16 inch wheels	168 kPa (1.7 kgf/cm², 24 psi)
17 inch or larger wheels	175 kPa (1.8 kgf/cm², 25 psi)

   Does the indicator come on when the pressure drops below the specified tire pressure lower limit?

   YES—The system is OK at this time.■

   NO—Go to step 5.

5. Do the tire pressure sensor location procedure to determine the affected tire location and relate it to the tire pressure sensor number (see page 18-61).

   Did each tire pressure sensor respond to the TPMS initializer tool?

   YES—Go to step 6.

   NO—Check that the tire pressure sensor is properly mounted. If necessary, replace the appropriate tire pressure sensor (see page 18-84).■

6. Check the TIRE 1, TIRE 2, TIRE 3, or TIRE 4 AIR PRESSURE in the TPMS DATA LIST with the HDS, and compare with the actual measured tire pressure.

   Is the indicated tire pressure on the HDS within 40 kPa (0.4 kgf/cm², 6 psi) of the actual tire pressure?

   YES—Go to step 7.

   NO—Replace the appropriate tire pressure sensor (see page 18-84).■

7. Turn the ignition switch to LOCK (0).

(cont'd)

Symptom Troubleshooting (cont'd)

8. Disconnect the TPMS control unit 20P connector.

9. Measure the voltage between TPMS control unit 20P connector terminals No. 4 and No. 8.

TPMS CONTROL UNIT 20P CONNECTOR

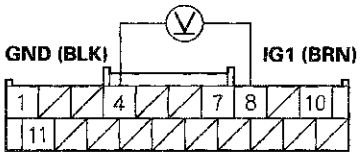

Wire side of female terminals

Is there battery voltage?

YES—Repair short to power in the wire between the TPMS control unit and the No. 5 (7.5 A) fuse in the driver's under-dash fuse/relay box. ■

NO—Check for loose terminals and poor connections at the TPMS control unit. If necessary, substitute a known-good TPMS control unit (see page 18-83), and recheck. ■

Low tire pressure indicator does not go off, and no DTCs are stored

1. Turn the ignition switch to LOCK (0).

2. Disconnect the TPMS control unit 20P connector.

3. Turn the ignition switch to ON (II).

4. Check the low tire pressure indicator for several seconds when the ignition switch is turned to ON (II).

Did the indicator come on and then go off?

YES—Check for loose terminals and poor connections at the TPMS control unit. If necessary, substitute a known-good TPMS control unit (see page 18-83), and recheck. ■

NO—Do the troubleshooting for the gauge control module (see page 22-304). If necessary, substitute a known-good gauge control module (see page 22-324), and recheck. ■

TPMS indicator does not come on, and no DTCs are stored

1. Turn the ignition switch to LOCK (0).
2. Disconnect the TPMS control unit 20P connector.
3. Turn the ignition switch to ON (II).
4. Check the TPMS indicator for several seconds when the ignition switch is turned to ON (II).

   Did the indicator come on?

   YES—Check for loose terminals and poor connections at the TPMS control unit. If necessary, substitute a known-good TPMS control unit (see page 18-83), and recheck. ■

   NO—Do the troubleshooting for the gauge control module (see page 22-304). If necessary, substitute a known-good gauge control module (see page 22-324), and recheck. ■

TPMS indicator does not go off, and no DTCs are stored

NOTE: Check for gauge DTCs with the HDS (see page 22-3). If gauge DTCs are stored, troubleshoot those DTCs first.

1. Turn the ignition switch to ON (II).
2. Check the TPMS indicator for several seconds when the ignition switch is turned to ON (II).

   Did the indicator come on and then go off?

   YES—The system is OK at this time. ■

   NO—Go to step 3.

3. Turn the ignition switch to LOCK (0).
4. Check the No. 29 (7.5 A) fuse in the driver's under-dash fuse/relay box.

   Is the fuse blown?

   YES—Replace the No. 29 (7.5 A) fuse, and recheck. If the fuse blows again, check for a short to body ground in the wire between the TPMS control unit and the No. 29 (7.5 A) fuse in the driver's under-dash fuse/relay box. ■

   NO—Reinstall the fuse, then go to step 5.

5. Check the No. 5 (7.5 A) fuse in the driver's under-dash fuse/relay box.

   Is the fuse blown?

   YES—Replace the No. 5 (7.5 A) fuse, and recheck. If the fuse blows again, check for a short to body ground in the wire between the TPMS control unit and the No. 5 (7.5 A) fuse in the driver's under-dash fuse/relay box. ■

   NO—Reinstall the fuse, then go to step 6.

6. Disconnect the TPMS control unit 20P connector.

(cont'd)

Symptom Troubleshooting (cont'd)

7. Measure the voltage between body ground and TPMS control unit 20P connector terminal No. 10.

TPMS CONTROL UNIT 20P CONNECTOR

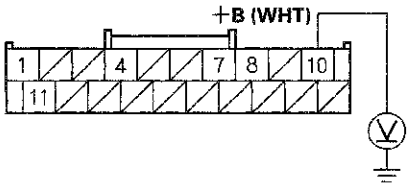

Wire side of female terminals

Is there battery voltage?

YES—Go to step 8.

NO—Repair open in the wire between the TPMS control unit and the No. 29 (7.5 A) fuse in the driver's under-dash fuse/relay box. ■

8. Turn the ignition switch to ON (II).

9. Measure the voltage between body ground and TPMS control unit 20P connector terminal No. 8.

TPMS CONTROL UNIT 20P CONNECTOR

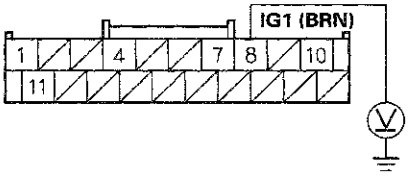

Wire side of female terminals

Is there battery voltage?

YES—Go to step 10.

NO—Repair open in the wire between the TPMS control unit and the No. 5 (7.5 A) fuse in the driver's under-dash fuse/relay box. ■

10. Turn the ignition switch to LOCK (0).

11. Reconnect the TPMS control unit 20P connector.

12. Turn the ignition switch to ON (II).

13. Measure the voltage between body ground and TPMS control unit 20P connector terminal No. 4.

TPMS CONTROL UNIT 20P CONNECTOR

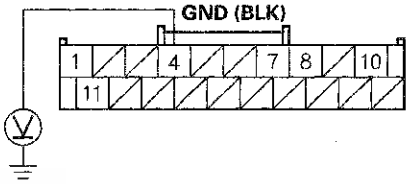

Wire side of female terminals

Is there 0.1 V or more?

YES—Repair open or high resistance in the wire between the TPMS control unit and body ground (G503). ■

NO—Do the troubleshooting for the gauge control module (see page 22-304). If the gauge control module is OK, check for loose terminals and poor connections at the TPMS control unit. If necessary, substitute a known-good TPMS control unit (see page 18-83), and recheck. ■

TPMS Control Unit Replacement

NOTE: Make sure the TPMS control unit mounting bracket is not bent or twisted as this may affect its communication with the tire pressure sensors.

1. Turn the ignition switch to LOCK (0).

2. Remove the flange bolt (A), then remove the TPMS control unit (B) with the bracket (C).

   NOTE: The TPMS control unit is located over the accelerator pedal module.

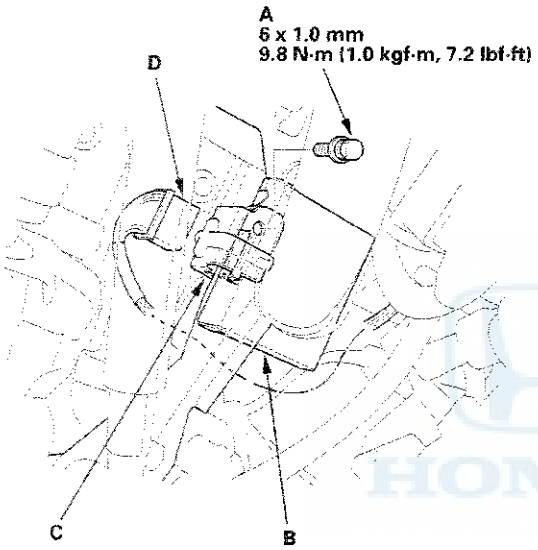

3. Disconnect the TPMS control unit connector (D).

4. Remove the TPMS control unit (A) from the bracket (B).

   NOTE: While separating the TPMS control unit from the bracket, release the hook (C) on the TPMS control unit using a flat-tipped screwdriver (D), and push it up to remove the bracket.

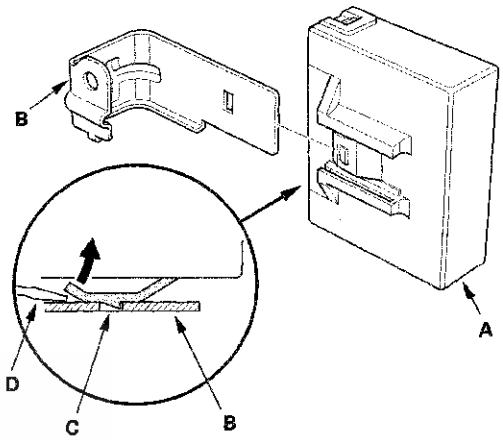

5. Install the new TPMS control unit in the reverse order of removal.

   NOTE: Make sure the TPMS control unit is properly installed. You will hear a click when the TPMS control unit is securely mounted on the bracket.

6. Connect the HDS, and memorize the tire pressure sensor IDs using the TPMS initializer tool (see page 18-60).

Tire Pressure Sensor Replacement

Removal

1. Raise the vehicle, and support it with safety stands in the proper locations (see page 1-11).

2. Remove the wheel with the faulty sensor.

3. Remove the tire valve stem cap and the valve stem core, and let the tire deflate.

4. Remove any balance weights, and then break the bead loose from the wheel with a commercially available tire changer (A).

   NOTICE
   Note these items to avoid damaging the tire pressure sensor:
   - Do the outside of the wheel first.
   - Position the wheel as shown so the valve stem (B) is 90 degrees from the bead breaker (C) as shown.
   - Do not position the bead breaker of the tire changer too close to the rim.

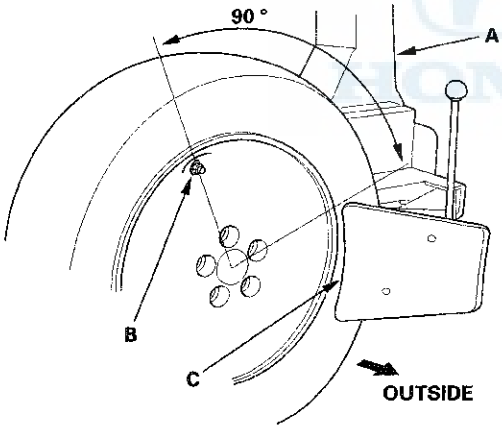

5. Position the wheel so the tire machine (A) and tire iron (B) are next to the valve stem (C) and will move away from it when the machine starts. Then remove the tire from the wheel.

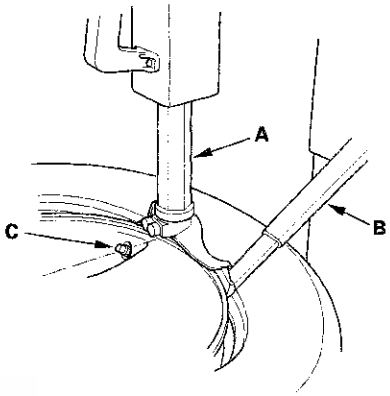

6. Remove the valve stem nut (A) and the washer (B), then remove the tire pressure sensor with the valve stem (C) from the wheel.

   NOTE: Check the nut and the washer; if they have deterioration or damage, replace with new ones during reassembly.

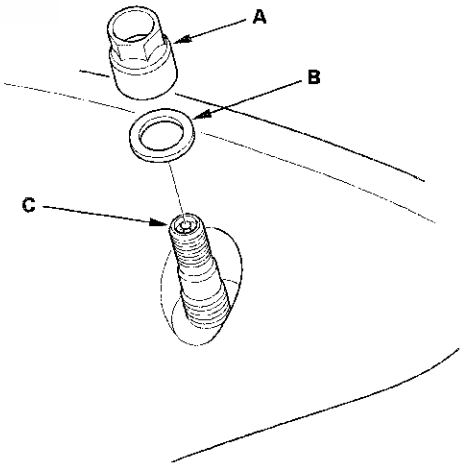

7. Remove and discard the valve stem grommet (A) from the tire pressure sensor (B).

   NOTE:
   - The valve stem grommet might stay in the wheel; make sure you remove it.
   - Always use a new valve stem grommet whenever the tire pressure sensor has been removed from the wheel. When only removing a tire from the wheel, replace the valve stem grommet if it is possible.

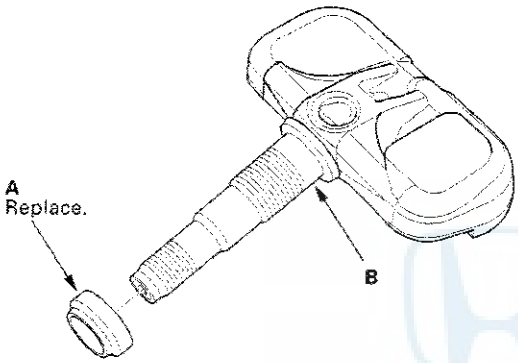

Installation

NOTE:
- Use only wheels that have a "TPMS", "TA0", or "TE0" stamp (A) on the inside of the aluminum wheels, and the outside of the steel wheels.
- The vehicle may be equipped with one of the six types of wheels.

Type 1 (aluminum wheel)

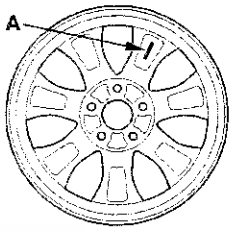

Type 2 (aluminum wheel)

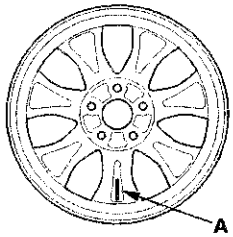

Type 3 (aluminum wheel)

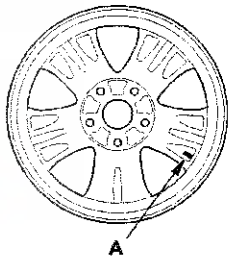

Type 4 (aluminum wheel)

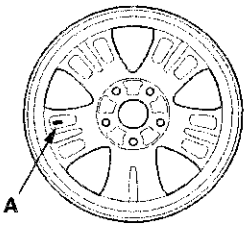

Type 5 (aluminum wheel)

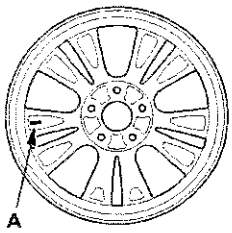

Type 6 (steel wheel)

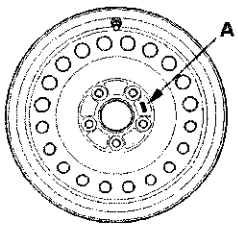

(cont'd)

Tire Pressure Sensor Replacement (cont'd)

1. Before installing the tire pressure sensor, clean the mating surfaces on the sensor and the wheel.

2. Install the tire pressure sensor (A) and the washer (B) to the wheel (C), and tighten the valve stem nut (D) finger tight. Make sure the pressure sensor is resting on the wheel.

   NOTE: Install the tire pressure sensor so that the sensor housing surface (E) does not extend beyond the protrusion (F) on the wheel to prevent the sensor housing from being caught on the bead of the tire when assembling the tire.

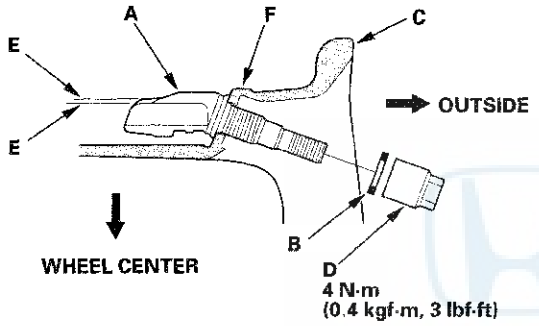

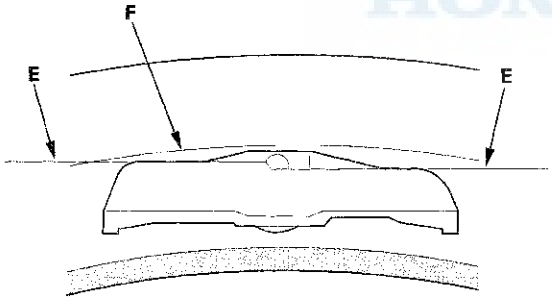

3. Tighten the valve stem nut to the specified torque while holding the tire pressure sensor.

   NOTE:
   - Do not use air or electric impact tools to tighten a valve stem nut.
   - Do not twist the tire pressure sensor to adjust its position with the wheel, as this will damage or deform the valve stem grommet.

4. Lube the tire bead sparingly with a paste-type tire mounting lubricant, and position the wheel so the tire machine (A) and tire iron (B) are next to the valve stem (C) and will move away from it when the machine starts. Then install the tire onto the wheel.

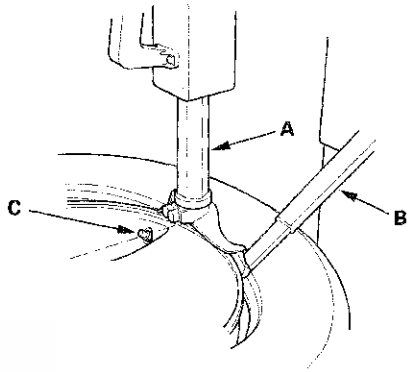

5. With a dry air source, inflate the tire to 300 kPa (3.1 kgf/cm^2, 44 psi) to seat the tire bead to the rim, then adjust the tire pressure (see page 18-5), and install the valve stem cap.

   NOTE: Make sure the tire bead is seated on both sides of the rim uniformly.

6. Check and adjust the wheel balance, then install the wheels on the vehicle.

7. Remove the jack stands, and lower the vehicle. Torque the wheel nuts to specifications.

8. Connect the HDS, and memorize the pressure sensor IDs using the TPMS sensor initializer tool (see page 18-60).

Navigation Tools: Click on the “Table of Contents” below, or use the Bookmarks to the left.

Brakes

Conventional Brake Components

Special Tools 19-2
Component Location Index 19-3
Brake System Inspection and Test 19-4
Symptom Troubleshooting 19-5
Brake Pedal and Brake Pedal Position Switch Adjustment 19-6
Parking Brake Inspection and Adjustment 19-7
Brake System Bleeding 19-9
Brake System Indicator Circuit Diagram 19-10
Parking Brake Switch Test 19-11
Brake Fluid Level Switch Test 19-11
Front Brake Pad Inspection and Replacement 19-12
Front Brake Disc Inspection 19-20
Front Brake Disc Replacement 19-22
Front Brake Caliper Overhaul 19-23
Master Cylinder Replacement 19-25
Master Cylinder Inspection 19-26
Brake Booster Test 19-27
Brake Booster Replacement 19-28
Rear Brake Pad Inspection and Replacement 19-29
Rear Brake Disc Inspection 19-32
Rear Brake Disc Replacement 19-34
Rear Brake Caliper Overhaul 19-36
Brake Pedal Replacement 19-37
Brake Hose and Line Inspection 19-38
Brake Hose Replacement 19-39
Parking Brake Cable Replacement 19-41

VSA (Vehicle Stability Assist) System Components 19-43

Conventional Brake Components

Special Tools

Ref. No.	Tool Number	Description	Qty
①	07AAE-SEPA101	Brake Caliper Piston Compressor	1

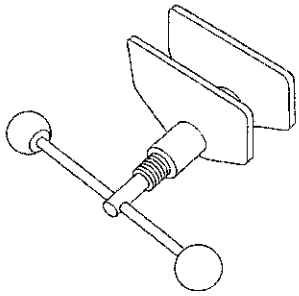

①

Component Location Index

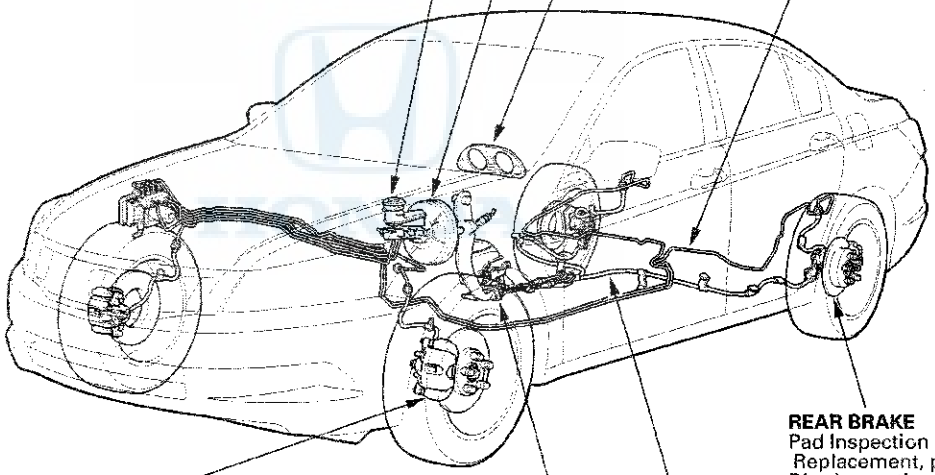

MASTER CYLINDER
Brake System Bleeding, page 19-9
Replacement, page 19-25
Inspection, page 19-26

BRAKE BOOSTER
Test, page 19-27
Replacement, page 19-28

BRAKE SYSTEM INDICATOR
Circuit Diagram, page 19-10
Parking Brake Switch Test, page 19-11
Brake Fluid Level Switch Test, page 19-11

BRAKE HOSE and LINE
Inspection, page 19-38
Brake Hose
Replacement, page 19-39

REAR BRAKE
Pad Inspection and
Replacement, page 19-29
Disc inspection, page 19-32
Disc Replacement, page 19-34
Caliper Overhaul, page 19-36

FRONT BRAKE
Pad Inspection and Replacement, page 19-12
Disc inspection, page 19-20
Disc Replacement, page 19-22
Caliper Overhaul, page 19-23

PARKING BRAKE
Inspection and Adjustment, page 19-7
Cable Replacement, page 19-41

BRAKE PEDAL
Brake Pedal and Brake Pedal
Position Switch Adjustment, page 19-6
Replacement, page 19-37

Conventional Brake Components

Brake System Inspection and Test

Inspect the brake system components listed. Repair or replace any parts that are leaking or damaged.

Component Inspections:

Component	Procedure	Also check for
Master Cylinder	Look for damage or signs of fluid leakage at: • Reservoir or reservoir grommets. • Line joints. • Between master cylinder and booster.	Bulging seal at reservoir cap. This is a sign of fluid contamination.
Brake Hoses	Look for damage or signs of fluid leakage at: • Line joints and banjo bolt connections. • Hoses and lines, also inspect for twisting or damage.	Bulging, twisted, or bent lines.
Caliper	Look for damage or signs of fluid leakage at: • Piston seal. • Banjo bolt connections. • Bleed screw.	Seized or sticking caliper pins.
VSA Modulator-control Unit	Look for damage or signs of fluid leakage at: • Line joints. • Modulator-control unit.	

Brake System Test

Brake pedal sinks/fades when braking

1. Set the parking brake, and start the engine, then turn off the A/C. Allow the engine to warm up to normal operating temperature (radiator fan comes on twice).

2. Attach a 50 mm (2 in.) piece of masking tape along the bottom of the steering wheel, and draw a horizontal reference mark across it.

3. With the transmission in neutral (M/T) or P or N (A/T), press and hold the brake pedal lightly (about the same pressure needed to keep an A/T-equipped vehicle from creeping), then release the parking brake.

4. While still holding the brake pedal, hook the end of the tape measure behind the brake pedal, then pull the tape up to the steering wheel. Note the measurement between the brake pedal and the reference mark on the steering wheel.

5. Apply steady pressure to the brake pedal for 3 minutes.

6. Watch the tape measure.

   • If the measurement increases 10 mm (3/8 in.) or less, the master cylinder is OK.
   • If the measurement increases more than 10 mm (3/8 in.), replace the master cylinder.

Symptom Troubleshooting

Rapid brake pad wear, vehicle vibration (after a long drive), or high, hard brake pedal

NOTE: Make sure that the caliper pins are installed correctly.
Upper caliper pin B and lower caliper pin A are different. If the pins are installed in the wrong location, it will cause vibration, uneven or rapid brake pad wear, and possibly uneven tire wear. For proper caliper pin location: NISSIN type (see page 19-23), AKEBONO type (see page 19-24).

1. Drive the vehicle until the brakes drag or until the pedal is high and hard. This can take 20 or more brake pedal applications during an extended test-drive.

2. With the engine running, raise the vehicle on a lift, and spin all four wheels by hand.

   Is there brake drag at any of the wheels?

   YES—Go to step 3.

   NO—Look for other causes of pad wear, high pedal, or vehicle vibration. ■

3. Turn the ignition switch to LOCK (0), press the brake pedal several times to deplete the vacuum in the brake booster, and then spin the wheels again to check for brake drag.

   Is there brake drag at any of the wheels?

   YES—Go to step 4.

   NO—Replace the brake booster (see page 19-28). ■

4. Without removing the brake lines, unbolt and separate the master cylinder from the brake booster, then spin the wheels to check for brake drag.

   Is there brake drag at any of the wheels?

   YES—Go to step 5.

   NO—Check the brake pedal position switch adjustment and pedal free play (see page 19-6). ■

5. Loosen the hydraulic lines at the master cylinder, then spin the wheels to check for brake drag.

   Is there brake drag at any of the wheels?

   YES—Go to step 6.

   NO—Check the master cylinder reservoir for contamination in the brake fluid. If you find contamination, flush the entire brake system of all contaminated fluid. If the brake fluid is OK, replace the master cylinder (see page 19-25). ■

6. Loosen the bleed screws at each caliper, then spin the wheels to check for brake drag.

   Is there brake drag at any of the wheels?

   YES—Check the master cylinder reservoir for contamination in the brake fluid. If you find contamination, flush the entire brake system of all contaminated fluid. If the brake fluid is OK, disassemble and repair the caliper on the wheel(s) with brake drag. ■

   NO—Look for and replace any damaged brake lines. If all brake lines are OK, replace the VSA modulator-control unit (see page 19-141). ■

Brake Pedal and Brake Pedal Position Switch Adjustment

Pedal Height

1. Turn the brake pedal position switch counterclockwise, and pull it back until it is no longer touching the brake pedal.

2. Remove the footrest (see step 4 on page 20-141), then remove the steering joint cover (see page 17-28).

3. Pull back the carpet, and find the cutout (A) in the insulator. Measure the pedal height (B) from left side middle of the pedal pad (C) to the floor (D) without the insulator as shown.

   Standard pedal height (with carpet removed):
   M/T: 156 mm (6 1/8 in.)
   A/T: 155 mm (6 1/18 in.)

M/T

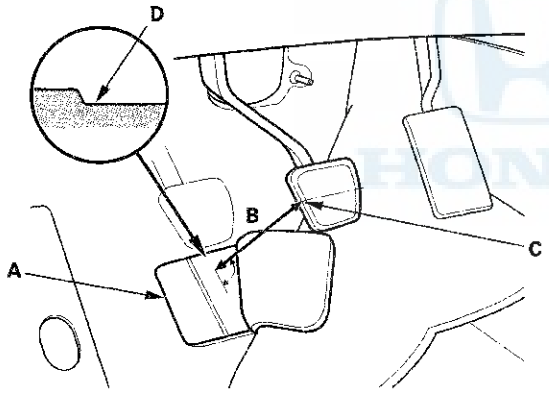

A/T

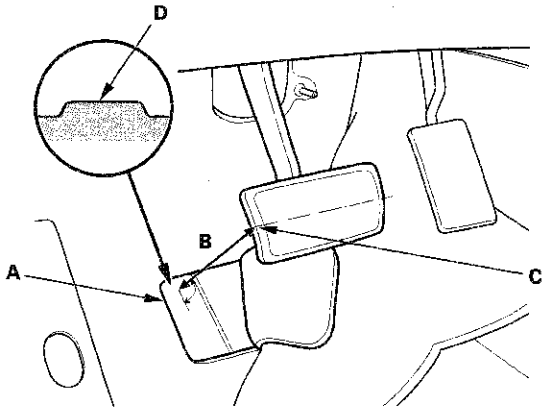

4. Loosen the pushrod locknut (A), and screw the pushrod (B) in or out with pliers until the standard pedal height from the floor is reached. After adjustment, tighten the locknut firmly. Do not adjust the pedal height with the pushrod pressed.

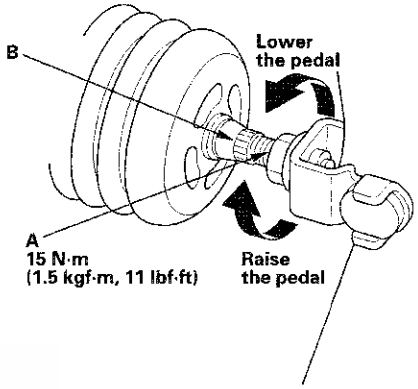

Brake Pedal Position Switch Clearance

5. Lift up on the brake pedal by hand. Push in the brake pedal position switch until its plunger is fully pressed (threaded end (A) touching the pad (B) on the pedal arm). Turn the switch 45 ° clockwise to lock it. The gap between the brake pedal position switch and the pad is automatically adjusted to 0.7 mm (0.028 in.) by locking the switch. Make sure the brake lights go off when the pedal is released.

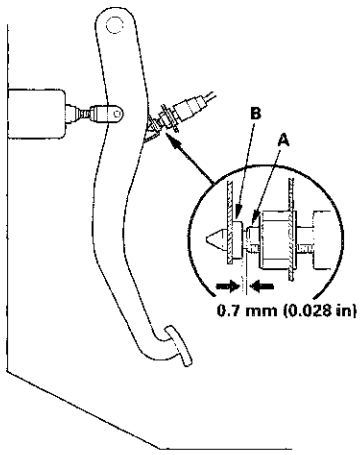

6. Install all removed parts in the reverse order of removal.

7. Check the brake pedal free play.

Pedal Free Play

1. With the ignition switch in LOCK (0), inspect the play (A) at the brake pedal pad (B) by pushing the brake pedal by hand. If the brake pedal free play is out of specification, adjust the brake pedal position switch (C). If the brake pedal free play is insufficient, it may result in brake drag.

   Free play: 1—5 mm (1/16—3/16 in.)

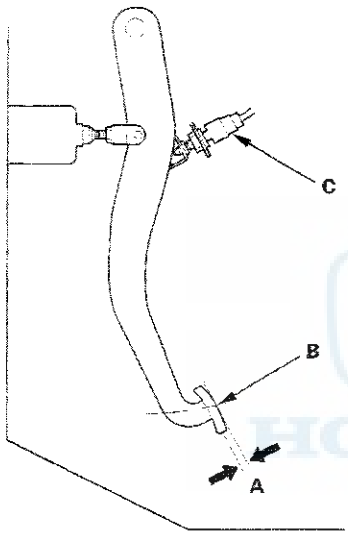

Parking Brake Inspection and Adjustment

Inspection

1. Pull the parking brake lever (A) with 196 N (20 kgf, 44 lbf) of force to fully apply the parking brake. The parking brake lever should be locked within the specified number of clicks.

   Lever locked clicks: 7 to 9

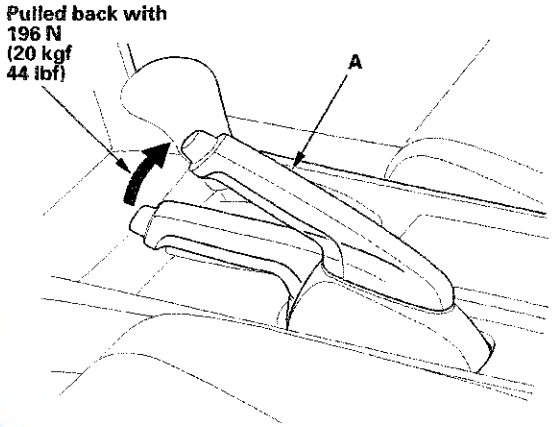

2. If the number of lever clicks is not as specified, adjust the parking brake.

(cont'd)

Parking Brake Inspection and Adjustment (cont'd)

Adjustment

1. Release the parking brake lever fully.
2. Pull out the center console rear trim (A) (see page 20-149).

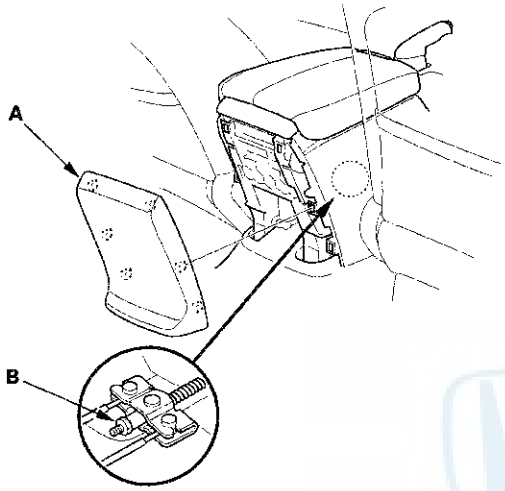

3. Loosen the parking brake adjusting nut (B).
4. Raise the rear of the vehicle, and support it with safety stands in the proper locations (see page 1-11).
5. Remove the rear wheels.
6. Make sure the lever (A) on the rear brake caliper contacts the arm (B).

   NOTE: The lever will contact the arm when the parking brake adjusting nut is loosened.

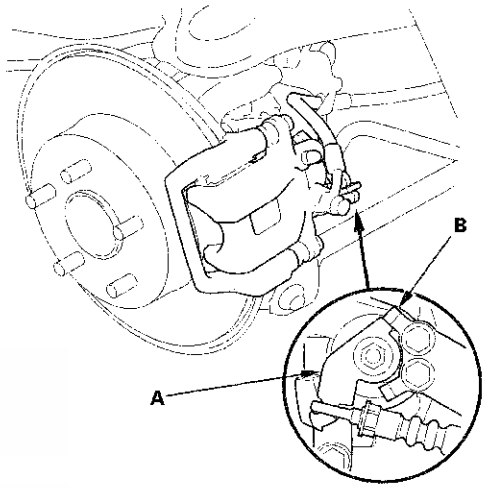

7. Clean the mating surfaces between the brake disc and the inside of the wheel, then install the rear wheels.
8. Pull the parking brake lever 1 click.
9. Tighten the parking brake adjusting nut until the parking brakes drag slightly when the rear wheels are turned.
10. Release the parking brake lever fully, and check that the parking brakes do not drag when the rear wheels are turned. Readjust if necessary.
11. Make sure the parking brake lever is within the specified number of clicks (7 to 9 clicks).
12. Install the center console rear trim (see page 20-149).

Brake System Bleeding

NOTE:
- Do not reuse the drained fluid. Use only clean Honda DOT 3 Brake Fluid from an unopened container. Using a non-Honda brake fluid can cause corrosion and shorten the life of the system.
- Make sure no dirt or other foreign matter is allowed to contaminate the brake fluid.
- Do not spill brake fluid on the vehicle, it may damage the paint; if brake fluid does contact the paint, wash it off immediately with water.
- The reservoir connected to the master cylinder must be at the MAX (upper) level mark at the start of the bleeding procedure and checked after bleeding each wheel location. Add fluid as required.

1. Make sure the brake fluid level in the reservoir (A) is at the MAX (upper) level line (B).

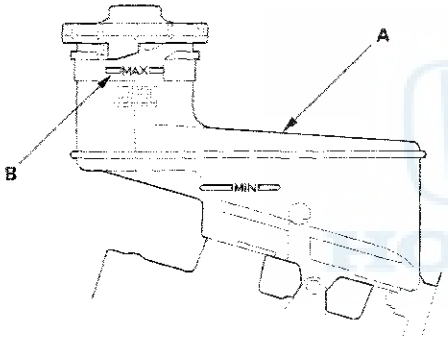

2. Have someone slowly pump the brake pedal several times, then apply steady pressure.

3. Start the bleeding at the driver's side of the front brake system.

   NOTE: Bleed the calipers in the sequence shown.

BLEEDING SEQUENCE:

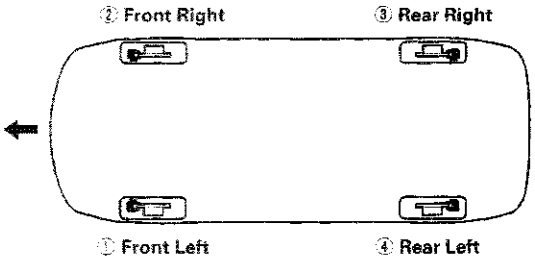

4. Attach a length of clear drain tube (A) to the bleed screw (B), then loosen the bleed screw to allow air to escape from the system. Then tighten the bleed screw securely.

   NOTE: The illustrations show the NISSIN type.

Front

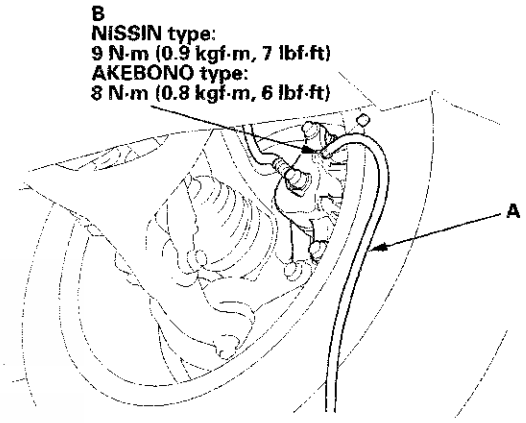

Rear

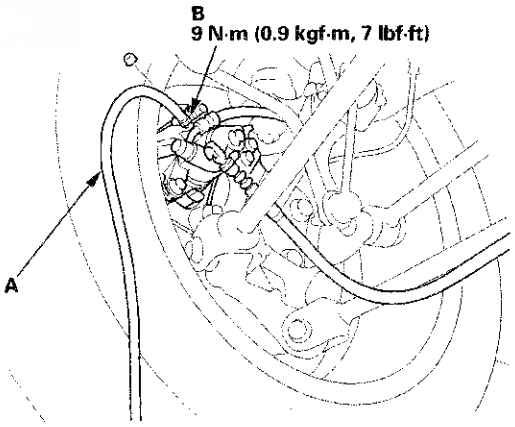

5. Refill the master cylinder reservoir to the MAX (upper) level line.

6. Repeat the procedure for each brake circuit until there are no air bubbles in the fluid.

Brake System Indicator Circuit Diagram

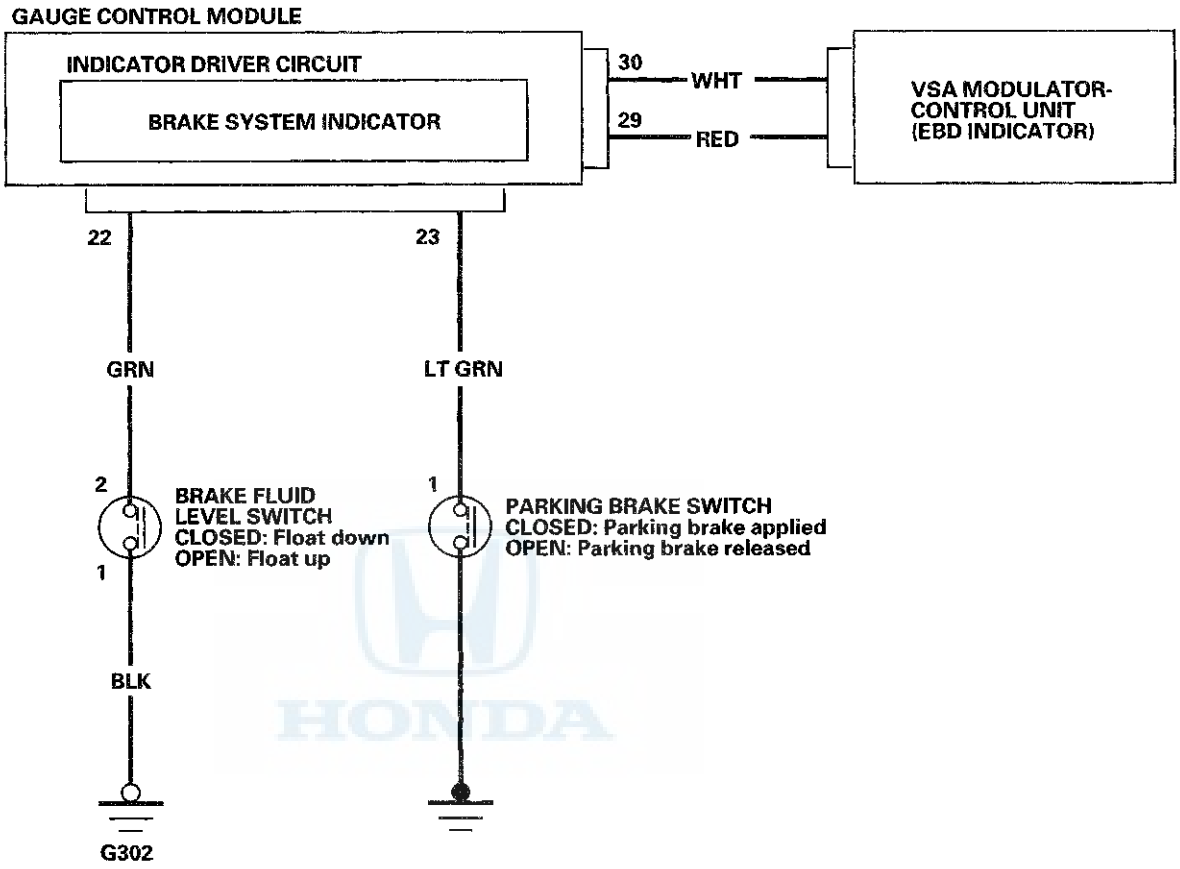

Parking Brake Switch Test

NOTE: If both the ABS/VSA indicator and the brake system indicator come on at the same time, check the VSA system for DTC's first (see page 19-46).

1. Remove the center console (see page 20-148).

2. Disconnect the parking brake switch connector (A) from the parking brake switch (B).

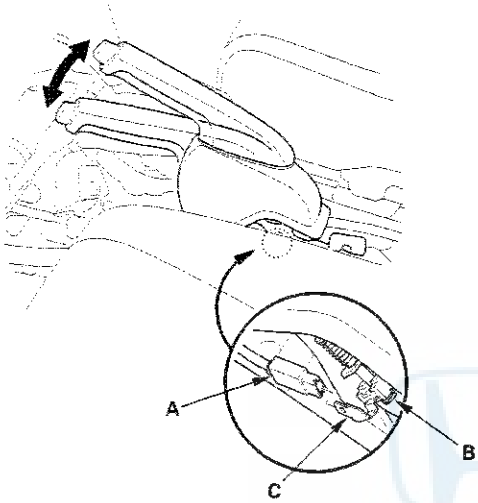

3. Check for continuity between the switch terminal (C) and body ground.

   - With the parking brake lever pulled, there should be continuity.
   - With the parking brake lever released, there should be no continuity.

   NOTE: If the parking brake switch and the brake fluid level switch are OK, but the brake system indicator does not function, do the gauge control module self-diagnostic function (see page 22-304).

4. Reconnect the parking brake switch connector.

5. Install the center console (see page 20-148).

Brake Fluid Level Switch Test

1. Disconnect the brake fluid level switch connector.

2. Check for continuity between the terminals (1) and (2) with the float in the down position and in the up position.

   NOTE:
   - Remove the brake fluid completely from the reservoir. With the float down, there should be continuity.
   - Fill the reservoir with brake fluid to the MAX (upper) level (A). With the float up, there should be no continuity.
   - If both the ABS/VSA indicator and the brake system indicator come on at the same time, check the VSA system for DTC's first (see page 19-46).
   - If the parking brake switch and brake fluid level switch are OK, but the brake system indicator does not function, do the gauge control module self-diagnostic function (see page 22-304).

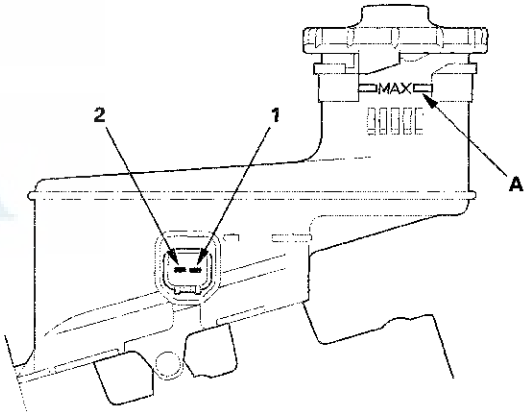

3. Reconnect the brake fluid level switch connector.

Front Brake Pad Inspection and Replacement

Special Tools Required
Brake caliper piston compressor 07AAE-SEPA101

⚠CAUTION

Frequent inhalation of brake pad dust, regardless of material composition, could be hazardous to your health.
- Avoid breathing dust particles.
- Never use an air hose or brush to clean brake assemblies. Use an OSHA-approved vacuum cleaner.

Inspection - NISSIN Type

1. Raise the front of the vehicle, and support it with safety stands in the proper locations (see page 1-11).

2. Remove the front wheels.

3. Remove the brake hose mounting bolt (A).

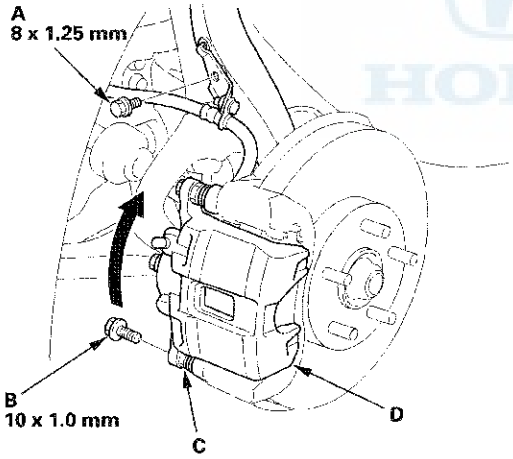

4. Remove the flange bolt (B) while holding the caliper pin (C) with a wrench. Be careful not to damage the pin boot, and pivot the caliper (D) up out of the way. Check the hose and pin boots for damage and deterioration.

5. Check the thickness (A) of the inner pad (B) and the outer pad (C). Do not include the thickness of the backing plate.

Brake pad thickness:
Standard: 10.5—11.2 mm (0.41—0.44 in.)
Service limit: 1.6 mm (0.06 in.)

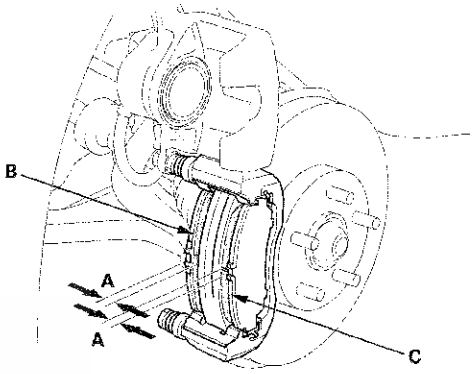

6. If any of the brake pad thickness is less than the service limit, replace the front brake pads as a set.

7. Pivot the caliper down into position. Install the flange bolt (A), and tighten it to the specified torque while holding the caliper pin (B) with a wrench. Be careful not to damage the pin boot.

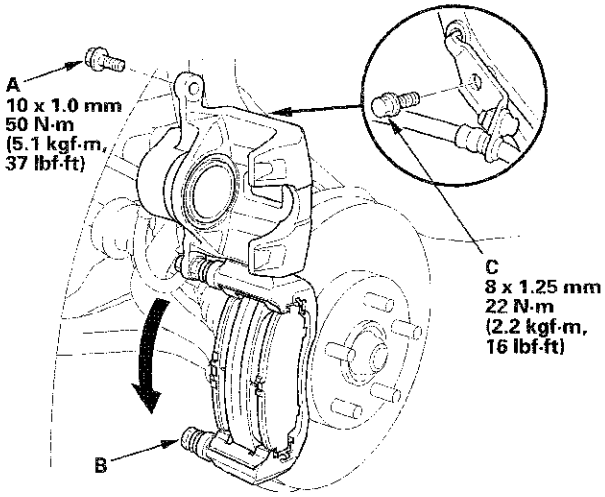

8. Install the brake hose mounting bolt (C).

9. Clean the mating surfaces between the brake disc and the inside of the wheel, then install the front wheels.

Replacement - NISSIN Type

1. Remove some brake fluid from the master cylinder.

2. Raise the front of the vehicle, and support it with safety stands in the proper locations (see page 1-11).

3. Remove the front wheels.

4. Remove the brake hose mounting bolt (A).

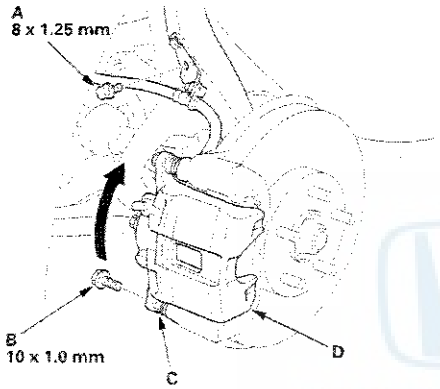

5. Remove the flange bolt (B) while holding the caliper pin (C) with a wrench. Be careful not to damage the pin boot, and pivot the caliper (D) up out of the way. Check the hose and the pin boots for damage and deterioration.

6. Remove the pad shims (A) and the brake pads (B).

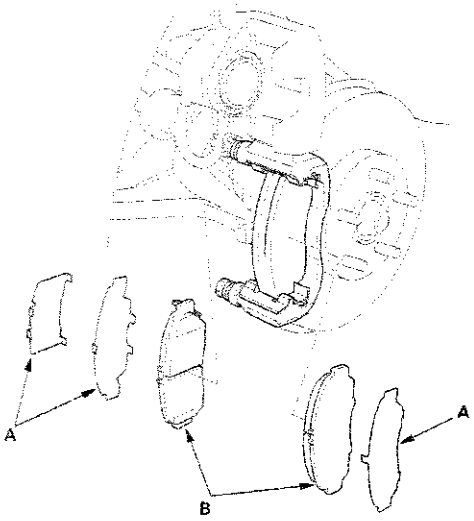

7. Remove the pad retainers (A).

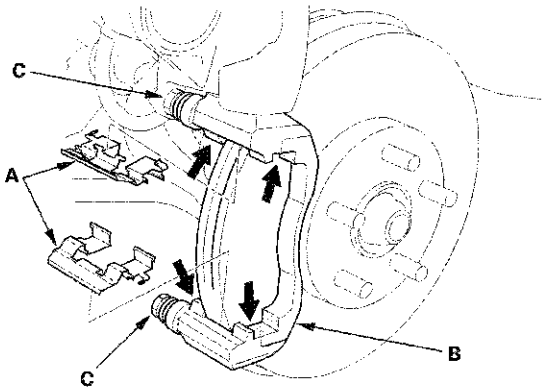

8. Clean the caliper bracket (B) thoroughly; remove any rust, and check for grooves and cracks. Verify that the caliper pins (C) move in and out smoothly. Clean and lube if needed.

9. Inspect the brake disc, and check for damage and cracks (see page 19-20).

10. Apply a thin coat of M-77 assembly paste (P/N 08798-9010) to the retainer mating surface of the caliper bracket (indicated by the arrows and shaded area).

11. Install the pad retainers. Wipe excess assembly paste off the retainers. Keep the assembly paste off the brake disc and the brake pads.

(cont'd)

Front Brake Pad Inspection and Replacement (cont'd)

12. Mount the brake caliper piston compressor tool (A) on the caliper body (B).

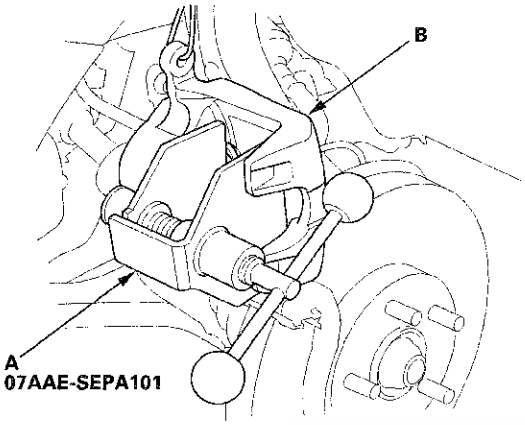

13. Press in the piston with the brake caliper piston compressor tool so the caliper will fit over the brake pads. Make sure the piston boot is in position to prevent damaging it when pivoting the caliper down.

    NOTE: Be careful when pressing in the piston; brake fluid might overflow from the master cylinder's reservoir. If brake fluid gets on any painted surface, wash it off immediately with water.

14. Remove the brake caliper piston compressor tool.

15. Apply a thin coat of M-77 assembly paste (P/N 08798-9010) to the pad side of the shims (A), the back of the brake pads (B) and the other areas indicated by the arrows. Wipe excess assembly paste off the pad shims and the brake pads friction material. Keep grease and assembly paste off the brake discs and the brake pads. Contaminated brake discs or brake pads reduce stopping ability.

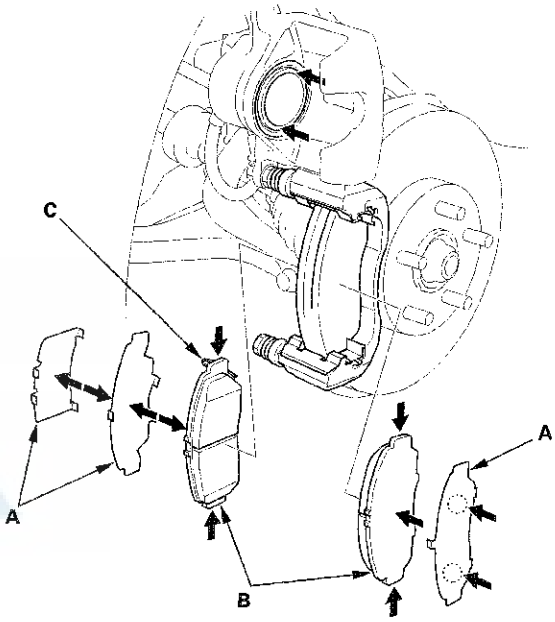

16. Install the brake pads and the pad shims correctly. Install the brake pad with the wear indicator (C) on the upper inside. If you are reusing the brake pads, always reinstall the brake pads in their original positions to prevent a momentary loss of braking efficiency.

17. Pivot the caliper down into position. Install the flange bolt (A), and tighten it to the specified torque while holding the caliper pin (B) with a wrench being careful not to damage the pin boot.

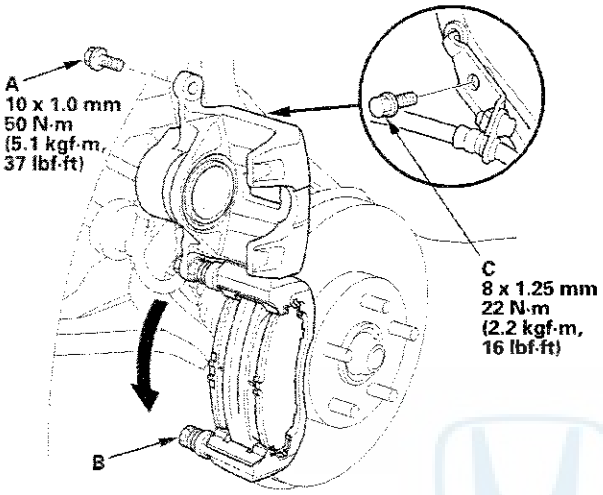

18. Install the brake hose mounting bolt (C).

19. Clean the mating surfaces between the brake disc and the inside of the wheel, then install the front wheels.

20. Press the brake pedal several times to make sure the brakes work.

    NOTE: Engagement may require a greater pedal stroke immediately after the brake pads have been replaced as a set. Several applications of the brake pedal will restore the normal pedal stroke.

21. Add brake fluid as needed.

22. After installation, check for leaks at hose and line joints or connections, and retighten if necessary. Test-drive the vehicle, then recheck for leaks (see page 19-38).

(cont'd)

Front Brake Pad Inspection and Replacement (cont'd)

Inspection - AKEBONO Type

1. Raise the front of the vehicle, and support it with safety stands in the proper locations (see page 1-11).

2. Remove the front wheels.

3. Check the thickness (A) of the inner pad (B) and the outer pad (C). Do not include the thickness of the backing plate.

   Brake pad thickness:
   Standard: 10.5—10.8 mm (0.41—0.43 in.)
   Service limit: 1.6 mm (0.06 in.)

   Inner pad

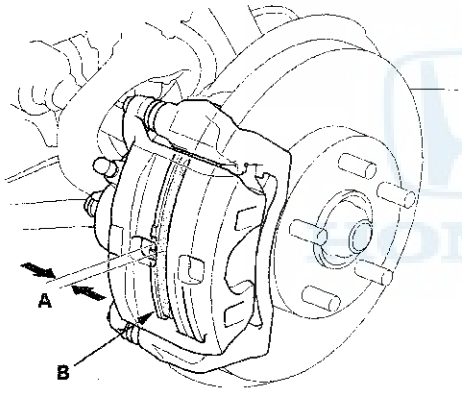

   Outer pad

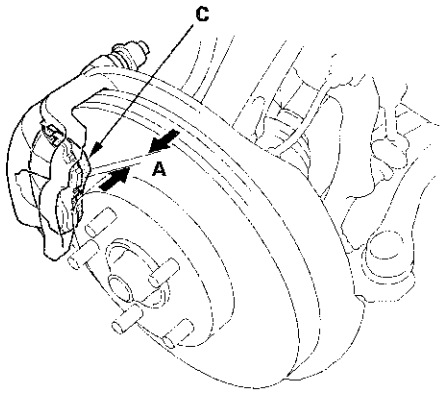

4. If any of the brake pad thickness is less than the service limit, replace the front brake pads as a set.

5. Clean the mating surfaces between the brake disc and the inside of the wheel, then install the front wheels.

Replacement - AKEBONO Type

1. Remove some brake fluid from the master cylinder.

2. Raise the front of the vehicle, and support it with safety stands in the proper locations (see page 1-11).

3. Remove the front wheels.

4. Remove the brake hose mounting bolt (A).

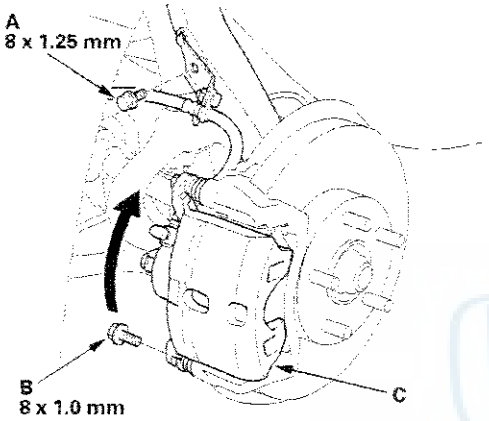

5. Remove the flange bolt (B), and pivot the caliper (C) up out of the way. Check the hose and pin boots for damage and deterioration.

6. Remove the pad shims (A) and the brake pads (B).

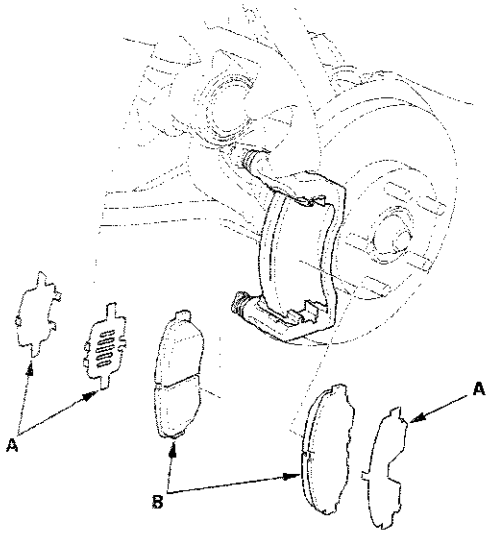

7. Remove the pad retainers (A).

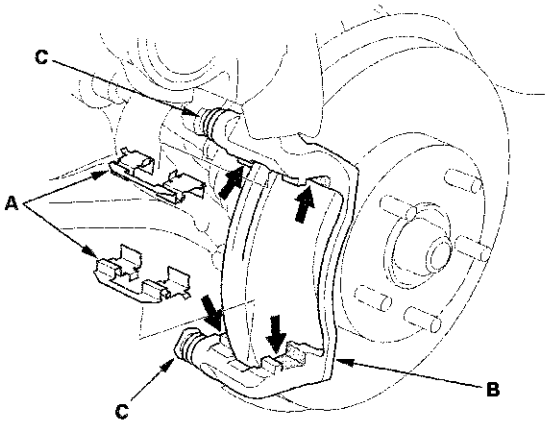

8. Clean the caliper bracket (B) thoroughly; remove any rust, and check for grooves and cracks. Verify that the caliper pins (C) move in and out smoothly. Clean and lube if needed.

9. Inspect the brake disc, and check for damage and cracks (see page 19-20).

10. Apply a thin coat of M-77 assembly paste (P/N 08798-9010) to the retainer mating surface of the caliper bracket (indicated by the arrows and shaded area).

11. Install the pad retainers. Wipe excess assembly paste off the retainers. Keep the assembly paste off the brake disc and the brake pads.

(cont'd)

Front Brake Pad Inspection and Replacement (cont'd)

12. Mount the brake caliper piston compressor tool (A) on the caliper body (B).

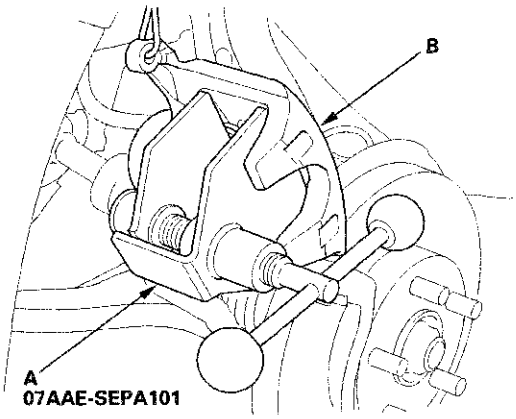

13. Press in the piston with the brake caliper piston compressor tool so the caliper will fit over the brake pads. Make sure the piston boot is in position to prevent damaging it when pivoting the caliper down.

    NOTE: Be careful when pressing in the piston; brake fluid might overflow from the master cylinder's reservoir. If brake fluid gets on any painted surface, wash it off immediately with water.

14. Remove the brake caliper piston compressor tool.

15. Apply a thin coat of M-77 assembly paste (P/N 08798-9010) to the pad side of the shims (A), the back of the brake pads (B) and the other areas indicated by the arrows. Wipe excess assembly paste off the pad shims and the brake pads friction material. Keep grease and assembly paste off the brake discs and the brake pads. Contaminated brake discs or brake pads reduce stopping ability.

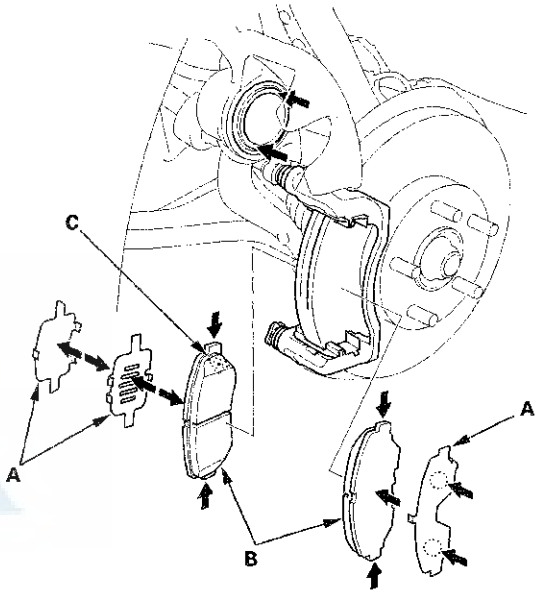

16. Install the brake pads and pad shims correctly. Install the brake pad with the wear indicator (C) on the upper inside. If you are reusing the brake pads, always reinstall the brake pads in their original positions to prevent a momentary loss of braking efficiency.

17. Pivot the caliper down into position. Install the flange bolt (A), and tighten it to the specified torque.

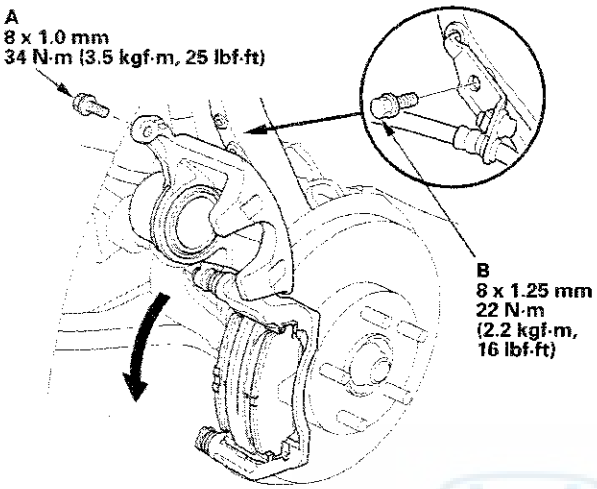

18. Install the brake hose mounting bolt (B).

19. Clean the mating surfaces between the brake disc and the inside of the wheel, then install the front wheels.

20. Press the brake pedal several times to make sure the brakes work.

    NOTE: Engagement may require a greater pedal stroke immediately after the brake pads have been replaced as a set. Several applications of the brake pedal will restore the normal pedal stroke.

21. Add brake fluid as needed.

22. After installation, check for leaks at hose and line joints or connections, and retighten if necessary. Test-drive the vehicle, then recheck for leaks (see page 19-38).

Front Brake Disc Inspection

Runout

1. Raise the front of the vehicle, and support it with safety stands in the proper locations (see page 1-11).

2. Remove the front wheels.

3. Remove the brake pads: NISSIN type (see page 19-13), AKEBONO type (see page 19-17).

4. Inspect the brake disc to wheel surface for damage and cracks. Clean the brake disc thoroughly, and remove all rust.

5. Install suitable flat washers (A) and the wheel nuts (B), and tighten the wheel nuts to the specified torque to hold the brake disc securely against the hub.

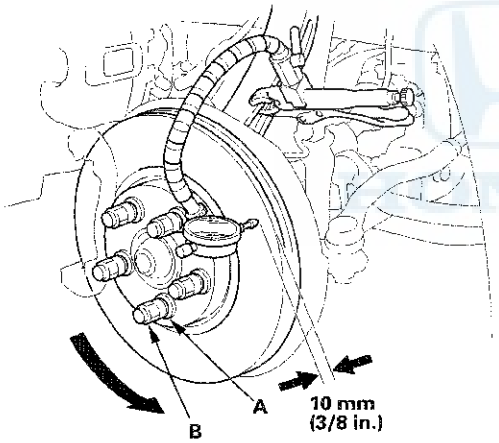

6. Set up the dial gauge against the brake disc as shown, and measure the runout at 10 mm (3/8 in.) from the outer edge of the brake disc.

   Brake disc runout:
   Service limit: 0.04 mm (0.0016 in.)

7. If the brake disc is beyond the service limit, refinish the brake disc with a Honda-approved commercially available on-car brake lathe.

   Max. refinishing limit:
   NISSIN type: 26.0 mm (1.02 in.)
   AKEBONO type: 21.0 mm (0.83 in.)

   NOTE:
   - If the brake disc is beyond the service limit for refinishing, replace it (see page 19-22).
   - If the brake disc is replaced with a new one, check the new disc for runout. If the new disc is out of specification, refinish the disc.

8. Install the brake pads: NISSIN type (see page 19-13), AKEBONO type (see page 19-17).

9. Clean the mating surfaces between the brake disc and the inside of the wheel, then install the front wheels.

Thickness and Parallelism

1. Raise the front of the vehicle, and support it with safety stands in the proper locations (see page 1-11).

2. Remove the front wheels.

3. Remove the brake pads: NISSIN type (see page 19-13), AKEBONO type (see page 19-17).

4. Using a micrometer, measure the brake disc thickness at eight points, about 45 ° apart and 10 mm (3/8 in.) in from the outer edge of the brake disc. Replace the brake disc if the smallest measurement is less than the max. refinishing limit.

   Brake disc thickness:
   Standard:
   NISSIN type: 27.9—28.1 mm (1.10—1.11 in.)
   AKEBONO type: 22.9—23.1 mm (0.90—0.91 in.)
   Max. refinishing limit:
   NISSIN type: 26.0 mm (1.02 in.)
   AKEBONO type: 21.0 mm (0.83 in.)
   Brake disc parallelism: 0.015 mm (0.0006 in.) max.

   NOTE: This is the maximum allowable difference between the thickness measurements.

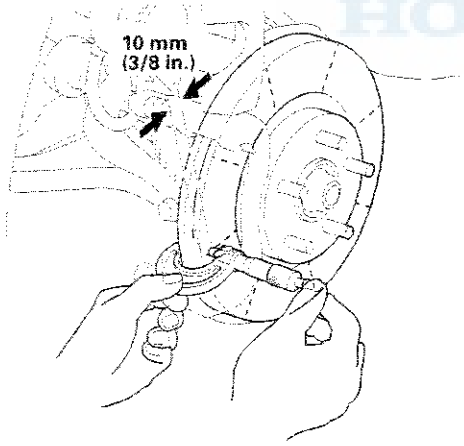

5. If the brake disc is beyond the service limit for parallelism, refinish the brake disc with a Honda-approved commercially available on car brake lathe.

   NOTE: If the brake disc is beyond the service limit for refinishing, replace it (see page 19-22).

6. Install the brake pads: NISSIN type (see page 19-13), AKEBONO type (see page 19-17).

7. Clean the mating surfaces between the brake disc and the inside of the wheel, then install the front wheels.

Front Brake Disc Replacement

NOTE: Keep any grease off the brake disc and brake pads.

1. Raise the front of the vehicle, and support it with safety stands in the proper locations (see page 1-11).

2. Remove the front wheel.

3. Remove the brake hose mounting bolt (A).

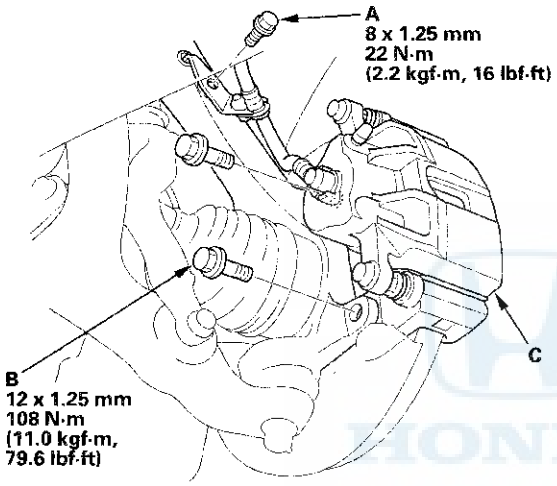

4. Remove the brake caliper bracket mounting bolts (B), then remove the caliper assembly (C) from the knuckle. To prevent damage to the caliper assembly or brake hose, use a short piece of wire to hang the caliper assembly from the undercarriage. Do not twist the brake hose excessively.

5. Remove the brake disc flathead screws (A).

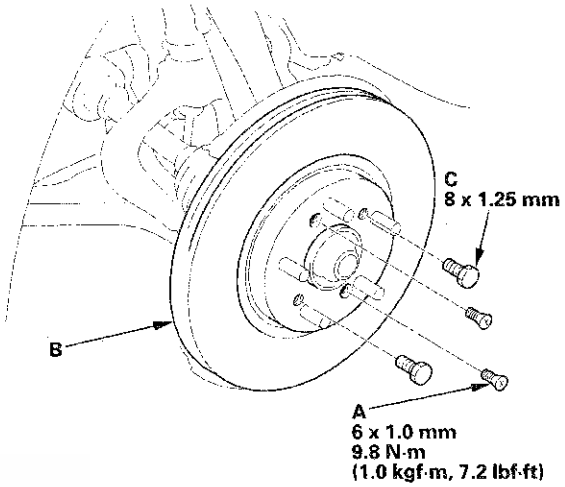

6. Remove the brake disc (B) from the front hub.

   NOTE: If the brake disc is stuck to the front hub, thread two 8 x 1.25 mm bolts (C) into the brake disc to push it away from the front hub. Turn each bolt 90 degrees at a time to prevent the brake disc from binding.

7. Install the brake disc in the reverse order of removal.

   NOTE: Before installing the brake disc, clean the mating surfaces between the front hub and the inside of the brake disc.

8. Inspect the brake disc runout (see page 19-20).

9. Clean the mating surfaces between the brake disc and the inside of the wheel, then install the front wheel.

Front Brake Caliper Overhaul

⚠CAUTION

Frequent inhalation of brake pad dust, regardless of material composition, could be hazardous to your health.
- Avoid breathing dust particles.
- Never use an air hose or brush to clean brake assemblies. Use an OSHA-approved vacuum cleaner.

NISSIN Type

Remove, disassemble, inspect, reassemble, and install the caliper, and note these items:

NOTE: Make sure that the caliper pins are installed correctly. Upper caliper pin B and lower caliper pin A are different. If these caliper pins are installed in the wrong location, it will cause vibration, uneven or rapid pad wear, and possibly uneven tire wear.

- Do not spill brake fluid on the vehicle; it may damage the paint; if brake fluid gets on the paint, wash it off immediately with water.
- To prevent dripping brake fluid, cover disconnected hose joints with rags or shop towels.
- Clean all parts in brake fluid and air dry; blow out all passages with compressed air.
- Before reassembling, check that all parts are free of dirt and other foreign particles.
- Replace parts with new ones as specified in the illustration.
- Make sure no dirt or other foreign matter gets in the brake fluid.
- Make sure no grease or oil gets on the brake discs or the pads.
- When reusing brake pads, always reinstall them in their original positions to prevent loss of braking efficiency.
- Do not reuse drained brake fluid. Use only clean Honda DOT 3 Brake Fluid from an unopened container. Using a non-Honda brake fluid can cause corrosion and shorten the life of the system.
- Coat the piston, the piston seal groove, and the caliper bore with clean brake fluid.
- Use recommended greases in the front caliper set.
- After installing the caliper, check the brake hose and line for leaks, interference, and twisting.
- Make sure not to get any silicone grease on the terminal part of the connectors and switches, especially if you have silicone grease on your hands or gloves.

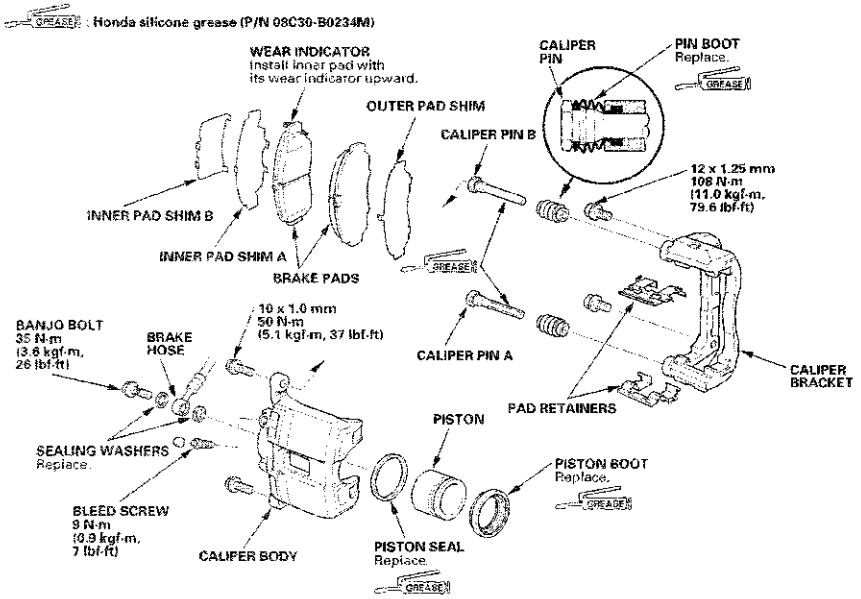

(cont'd)

Front Brake Caliper Overhaul (cont'd)

AKEBONO Type

Remove, disassemble, inspect, reassemble, and install the caliper, and note these items:

NOTE: Make sure that the caliper pins are installed correctly. Upper caliper pin B and lower caliper pin A are different. If these caliper pins are installed in the wrong location, it will cause vibration, uneven or rapid pad wear, and possibly uneven tire wear.

- Do not spill brake fluid on the vehicle; it may damage the paint; if brake fluid gets on the paint, wash it off immediately with water.
- To prevent dripping brake fluid, cover disconnected hose joints with rags or shop towels.
- Clean all parts in brake fluid and air dry; blow out all passages with compressed air.
- Before reassembling, check that all parts are free of dirt and other foreign particles.
- Replace parts with new ones as specified in the illustration.
- Make sure no dirt or other foreign matter gets in the brake fluid.
- Make sure no grease or oil gets on the brake discs or the pads.
- When reusing brake pads, always reinstall them in their original positions to prevent loss of braking efficiency.
- Do not reuse drained brake fluid. Use only clean Honda DOT 3 Brake Fluid from an unopened container. Using a non-Honda brake fluid can cause corrosion and shorten the life of the system.
- Coat the piston, the piston seal groove, and the caliper bore with clean brake fluid.
- Use recommended greases in the front caliper set.
- After installing the caliper, check the brake hose and line for leaks, interference, and twisting.
- Make sure not to get any silicone grease on the terminal part of the connectors and switches, especially if you have silicone grease on your hands or gloves.

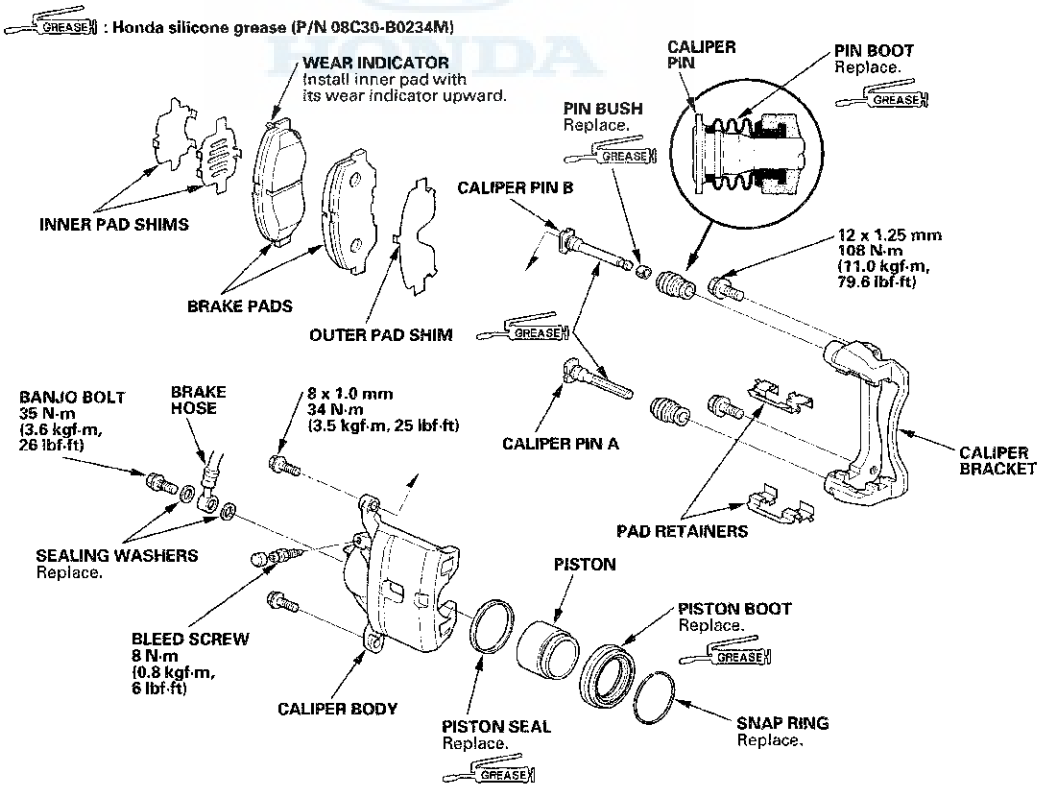

Master Cylinder Replacement

NOTICE

- Do not spill brake fluid on the vehicle; it may damage the paint; if brake fluid gets on the paint, wash it off immediately with water.
- Be careful not to damage or deform the brake lines during removal and installation.
- Plug the ends of the hoses and the joints to prevent spilling brake fluid.

1. Remove the under-hood fuse/relay box mount nut (A) and release the clip (B), then move the under-hood fuse/relay box (C) aside.

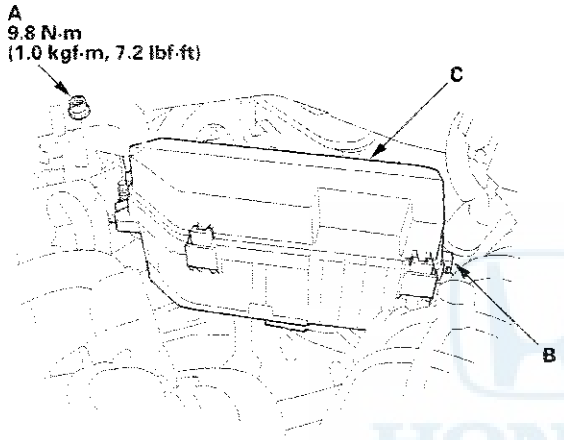

2. Remove the reservoir cap and the brake fluid from the master cylinder reservoir with a syringe.

3. Disconnect the brake fluid level switch connector (A).

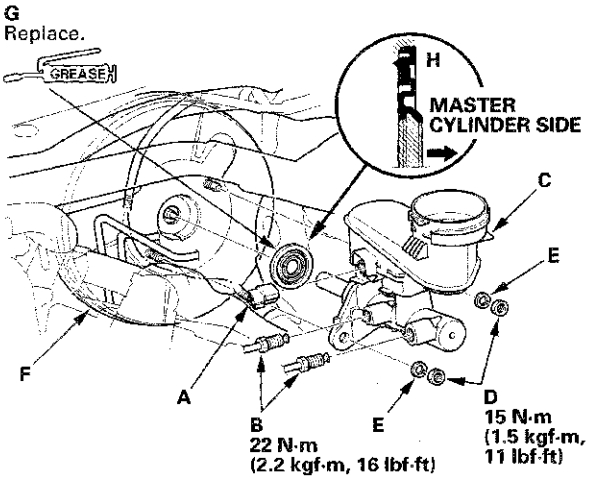

4. Disconnect the brake lines (B) from the master cylinder (C). To prevent spills, cover the hose joints with clean rags or shop towels.

5. Remove the master cylinder mounting nuts (D) and the washers (E).

6. Remove the master cylinder from the brake booster (F). Be careful not to bend or damage the brake lines when removing the master cylinder.

7. Remove the rod seal (G) from the master cylinder.

   NOTE: During installation, set a new rod seal onto the master cylinder with its grooved side (H) toward the master cylinder.

(cont'd)

Master Cylinder Replacement (cont'd)

8. Install the master cylinder in the reverse order of removal, and note these items:
   - Coat the inner bore lip and the outer circumference of the new rod seal with the Shin-Etsu silicone grease (P/N 08798-9013).
   - Make sure not to get any silicone grease on the terminal part of the connectors and switches, especially if you have silicone grease on your hands or gloves.
   - Check the brake pedal height and free play after installing the master cylinder, and adjust it if necessary (see page 19-6).
9. Install the under-hood fuse/relay box.
10. Bleed the brake system (see page 19-9).
11. Spin the wheels to check for brake drag.

Master Cylinder Inspection

1. Remove the master cylinder (see page 19-25).
2. Inspect and note these items:
   - Before reassembling, check that all parts are free of dirt and other foreign particles.
   - Do not try to disassemble the master cylinder assembly. Replace the master cylinder assembly with a new part if necessary.
   - Do not allow dirt or foreign matter to contaminate the brake fluid.

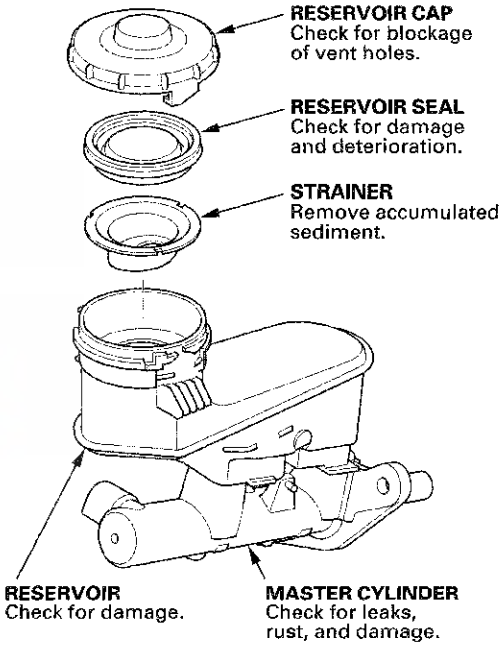

3. Install the master cylinder (see page 19-25).

Brake Booster Test

Functional Test

1. With the ignition switch in LOCK (0), press the brake pedal several times to deplete the vacuum reservoir, then press the brake pedal hard, and hold it for 15 seconds. If the brake pedal sinks, either the master cylinder is bypassing internally, or the brake system is leaking. Inspect the brake hoses and lines (see page 19-38).

2. Start the engine with the brake pedal pressed. If the brake pedal sinks slightly, the vacuum booster is operating normally. If the brake pedal height does not vary, do the brake system test (see page 19-4).

Leak Test

1. Press the brake pedal with the engine running, then stop the engine. The brake pedal height should not vary while pressed for 30 seconds.

   - If the pedal height rises, go to step 6.
   - If it does not rise, go to step 2.

2. Start the engine and let it idle for 30 seconds. Turn the ignition switch to LOCK (0), and wait 30 seconds. Press the brake pedal several times using normal pressure. When the pedal is first pressed, it should be low. On consecutive applications, the pedal height should gradually rise. Does the pedal rise on each consecutive application?

   - If is rises, the booster is OK.
   - If it does not rise, go to step 3.

3. Disconnect the brake booster vacuum hose (A) at the booster. The check valve (B) is built into the hose.

   NOTE: If the check valve is faulty, replace the brake booster vacuum hose/check valve as an assembly.

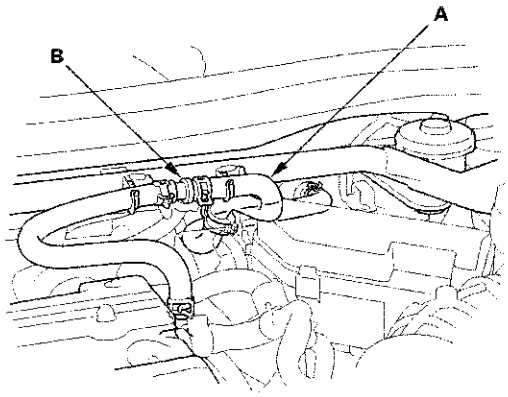

4. Start the engine, and let it idle. There should be vacuum available.

   - If no vacuum is available, the check valve is not working properly. Replace the brake booster vacuum hose and the check valve, and retest.
   - If vacuum is found, go to step 5.

5. With the ignition switch in LOCK (0), reconnect the vacuum hose to the brake booster.

6. Start the engine, and then pinch the brake booster vacuum hose between the check valve and the booster.

7. Turn the ignition switch to LOCK (0), and wait 30 seconds. Press the brake pedal several times using normal pressure. When the pedal is first pressed, it should be low. On consecutive applications, the pedal height should gradually rise.

   - If the pedal position does not vary, inspect the seal between the master cylinder and the booster. If the seal is OK, replace the brake booster.
   - If the pedal position varies, replace the brake booster vacuum hose/check valve as an assembly.

Brake Booster Replacement

1. Remove the cowl cover (see page 20-261).
2. Remove the strut brace (if equipped) (see page 20-289).
3. Remove the master cylinder (see page 19-25).
4. Disconnect the brake booster vacuum hose (A) from the brake booster.

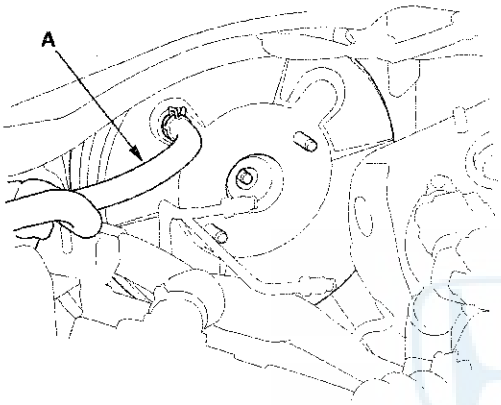

5. Remove the under-hood fuse/relay box bracket (A), then remove the engine wire harness clamps (B).

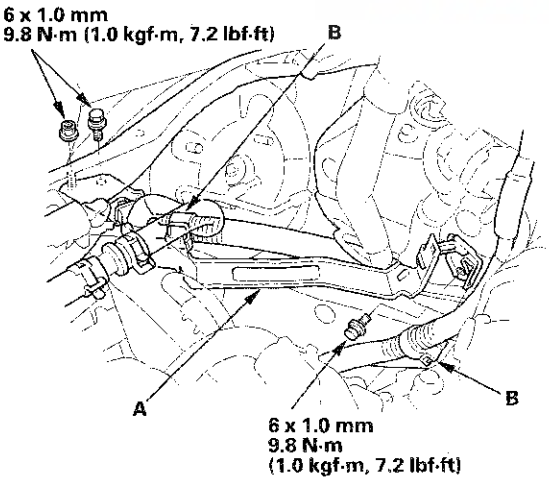

6. Remove the brake lines (A) from the hose clamp (B).

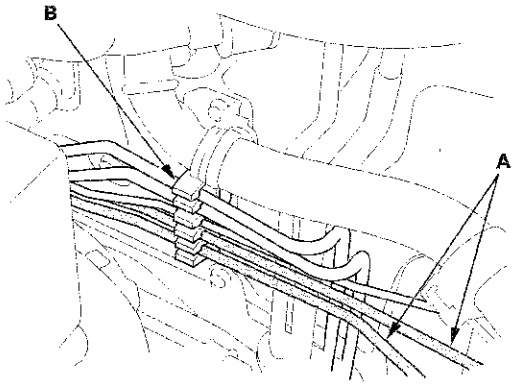

7. Remove the lock pin (A) and the clevis pin (B), then disconnect the yoke from the brake pedal.

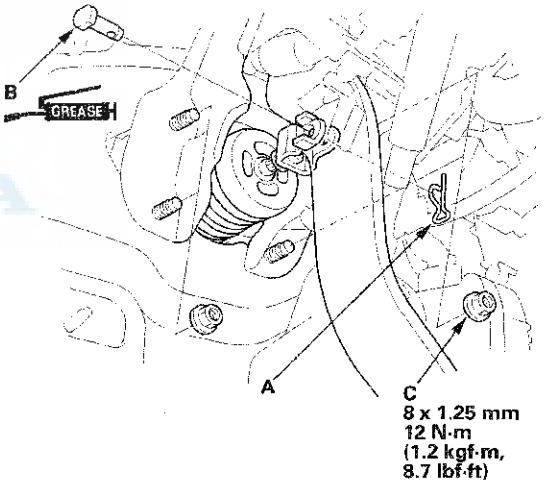

8. Remove the brake booster mounting nuts (C).

9. Remove the brake booster (A) from the engine compartment.

NOTICE

- Be careful not to damage the brake booster mounting surfaces and the threads on the booster bolts.
- Be careful not to bend or damage the brake lines.

NOTE: Use the new brake booster gasket (B) during reassembly.

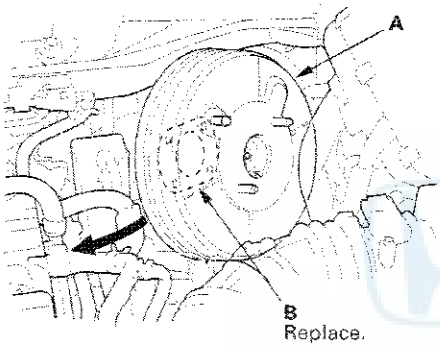

10. Install the brake booster in the reverse order of removal, and note these items:

- Install the master cylinder after installing the brake booster (see page 19-25).
- Check the brake pedal height and free play after installing the master cylinder, and adjust it if necessary (see page 19-6).
- Bleed the brake system (see page 19-9).

Rear Brake Pad Inspection and Replacement

⚠CAUTION

Frequent inhalation of brake pad dust, regardless of material composition, could be hazardous to your health.

- Avoid breathing dust particles.
- Never use an air hose or brush to clean brake assemblies. Use an OSHA-approved vacuum cleaner.

Inspection

1. Raise the rear of the vehicle, and support it with safety stands in the proper locations (see page 1-11).

2. Remove the rear wheels.

3. Check the thickness (A) of the inner pad (B) and the outer pad (C). Do not include the thickness of the backing plate.

Brake pad thickness:
Standard: 8.3—9.0 mm (0.33—0.35 in.)
Service limit: 1.0 mm (0.04 in.)

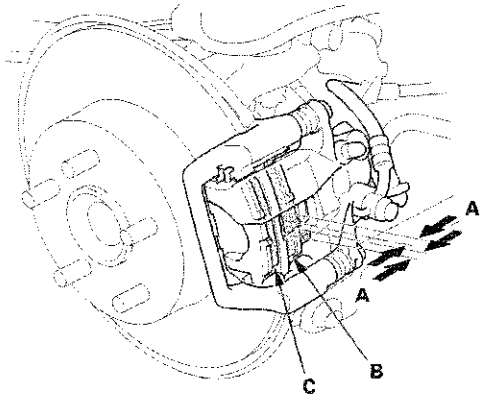

4. If any of the brake pad thickness is less than the service limit, replace the rear brake pads as a set.

5. Clean the mating surfaces between the brake disc and the inside of the wheel, then install the rear wheels.

(cont'd)

Rear Brake Pad Inspection and Replacement (cont'd)

Replacement

1. Remove some brake fluid from the master cylinder.

2. Raise the rear of the vehicle, and support it with safety stands in the proper locations (see page 1-11).

3. Remove the rear wheels.

4. Remove the brake hose mounting bolt (A).

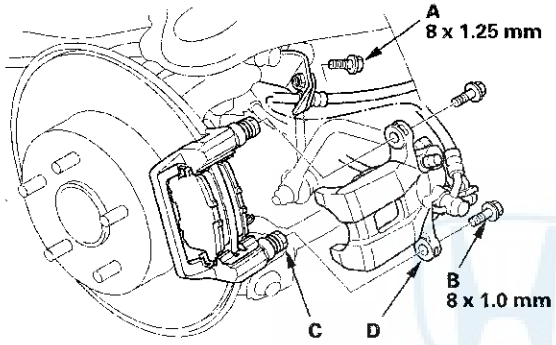

5. Remove the flange bolts (B) while holding respective caliper pin (C) with a wrench. Be careful not to damage the pin boot, and remove the caliper (D). Check the hose, the pin boots, and the parking brake cable boots for damage and deterioration.

   NOTE: Do not twist the brake hose and the parking brake cable to prevent damage.

6. Remove the pad shim (A) and the brake pads (B).

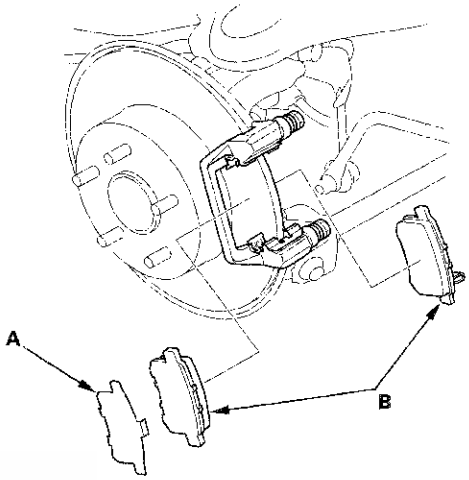

7. Remove the pad retainers (A).

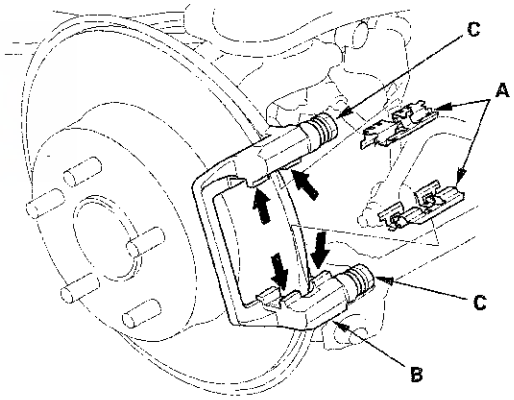

8. Clean the caliper bracket (B) thoroughly; remove any rust, and check for grooves and cracks. Verify that the caliper pins (C) move in and out smoothly. Clean and lube if needed.

9. Inspect the brake disc, and check for damage and cracks (see page 19-32).

10. Apply a thin coat of M-77 assembly paste (P/N 08798-9010) to the retainer mating surface of the caliper bracket (indicated by the arrows and shaded area).

11. Install the pad retainers. Wipe excess assembly paste off the retainers. Keep the assembly paste off the brake disc and the brake pads.

12. Apply a thin coat of M-77 assembly paste (P/N 08798-9010) to the pad side of the shims (A), the back of the brake pads (B), and the other areas indicated by the arrows. Wipe excess assembly paste off the pad shim and the brake pads friction material. Keep grease and assembly paste off the brake discs and the pads. Contaminated brake discs or brake pads reduce stopping ability.

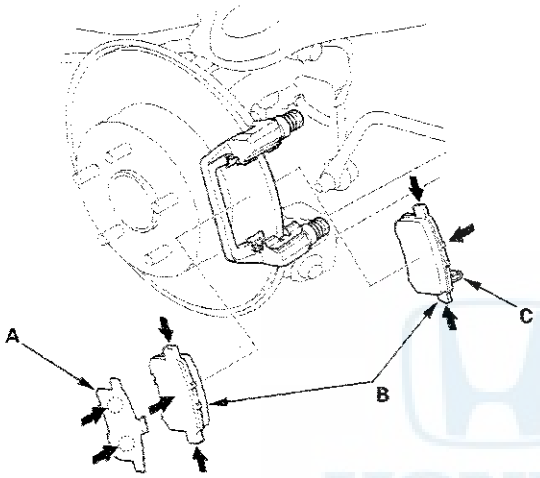

13. Install the brake pads and pad shim correctly. Install the brake pad with the wear indicator (C) on the bottom inside. If you are reusing the brake pads, always reinstall the brake pads in their original positions to prevent a momentary loss of braking efficiency.

14. Rotate the caliper piston (A) clockwise into the cylinder, then align the cutout (B) in the piston with the tab (C) on the inner pad by turning the piston back. Lubricate the boot with rubber grease to avoid twisting the piston boot. If the piston boot is twisted, back it out so it is positioned properly.

NOTE: Be careful when moving the piston back in the caliper; brake fluid might overflow from the master cylinder's reservoir.

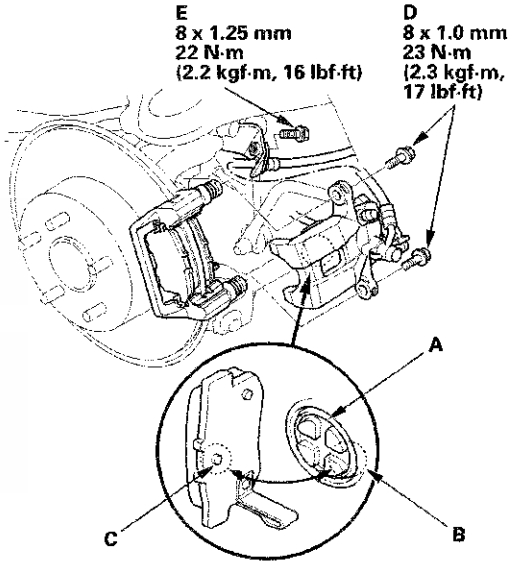

15. Install the caliper. Install the flange bolts (D), and tighten it to the specified torque while holding the respective caliper pin with a wrench being careful not to damage the pin boots and parking brake cable boots.

16. Install the brake hose mounting bolt (E).

(cont'd)

Rear Brake Pad Inspection and Replacement (cont'd)

17. Clean the mating surfaces between the brake disc and the inside of the wheel, then install the rear wheels.

18. Press the brake pedal several times to make sure the brakes work.

    NOTE: Engagement may require a greater pedal stroke immediately after the brake pads have been replaced as a set. Several applications of the brake pedal will restore the normal pedal stroke.

19. Add brake fluid as needed.

20. After installation, check for leaks at hose and line joints or connections, and retighten if necessary. Test-drive the vehicle, then recheck for leaks (see page 19-38).

Rear Brake Disc Inspection

Runout

1. Raise the rear of the vehicle, and support it with safety stands in the proper locations (see page 1-11).

2. Remove the rear wheels.

3. Remove the brake pads (see page 19-30).

4. Inspect the brake disc to wheel surface for damage and cracks. Clean the brake disc thoroughly, and remove all rust.

5. Install suitable flat washers (A) and the wheel nuts (B), and tighten the wheel nuts to the specified torque to hold the brake disc securely against the hub.

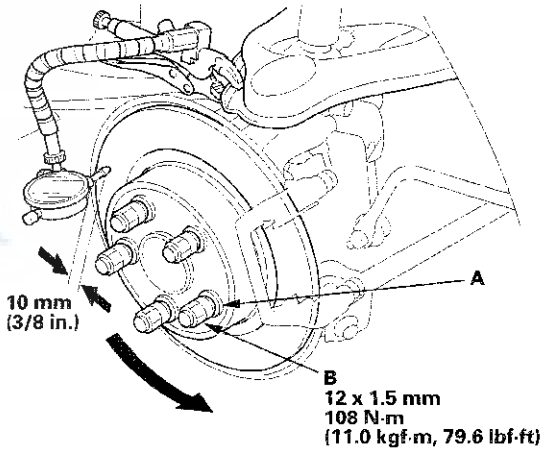

6. Set up the dial gauge against the brake disc as shown, and measure the runout at 10 mm (3/8 in.) from the outer edge of the brake disc.

   Brake disc runout:
   Service limit: 0.04 mm (0.0016 in.)

7. If the brake disc is beyond the service limit, refinish the brake disc with a Honda-approved commercially available on-car brake lathe.

   Max. refinishing limit: 8.0 mm (0.31 in.)

   NOTE:
   - If the brake disc is beyond the service limit for refinishing, replace it (see page 19-34).
   - If the brake disc is replaced with a new one, check the new disc for runout. If the new disc is out of specification, refinish the disc.

8. Install the brake pads (see page 19-30).

9. Clean the mating surfaces between the brake disc and the inside of the wheel, then install the rear wheels.

Thickness and Parallelism

1. Raise the rear of the vehicle, and support it with safety stands in the proper locations (see page 1-11).

2. Remove the rear wheels.

3. Remove the brake pads (see page 19-30).

4. Using a micrometer, measure the brake disc thickness at eight points, about 45 ° apart and 10 mm (3/8 in.) in from the outer edge of the brake disc. Replace the brake disc if the smallest measurement is less than the maximum-refinishing limit.

   Brake disc thickness:
   Standard: 8.9—9.1 mm (0.35—0.36 in.)
   Max. refinishing limit: 8.0 mm (0.31 in.)
   Brake disc parallelism:
   0.015 mm (0.0006 in.) max.

   NOTE: This is the maximum allowable difference between the thickness measurements.

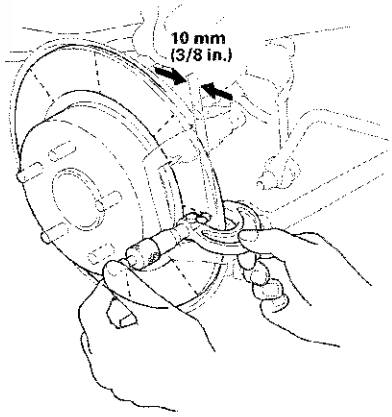

5. If the brake disc is beyond the service limit for parallelism, refinish the brake disc with a Honda-approved commercially available on-car brake lathe.

   NOTE: If the brake disc is beyond the service limit for refinishing, replace it (see page 19-34).

6. Install the brake pads (see page 19-30).

7. Clean the mating surfaces between the brake disc and the inside of the wheel, then install the rear wheels.

Rear Brake Disc Replacement

NOTE: Keep any grease off the brake disc and brake pads.

1. Raise the rear of the vehicle, and support it with safety stands in the proper locations (see page 1-11).
2. Remove the rear wheel.
3. Release the parking brake lever fully.
4. Loosen the parking brake cable adjusting nut (see page 19-8).
5. Remove the flange bolt (A) from the arm (B).

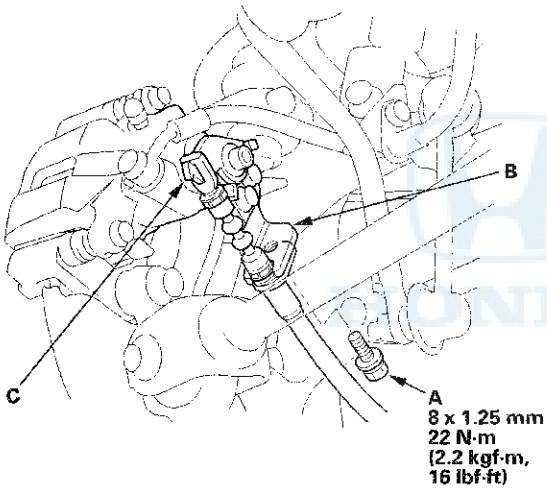

6. Disconnect the parking brake cable from the lever (C).
7. Remove the brake hose mounting bolt (A).

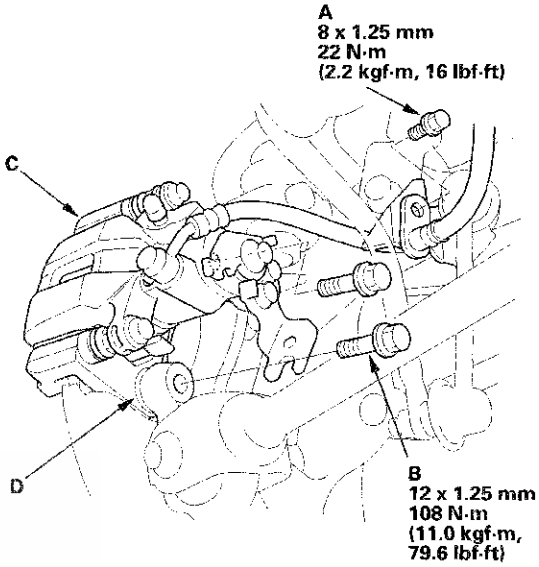

8. Remove the brake caliper bracket mounting bolts (B), and remove the caliper assembly (C) from the knuckle. To prevent damage to the caliper assembly or brake hose, use a short piece of wire to hang the caliper assembly from the undercarriage. Do not twist the brake hose and the parking brake cable excessively.

   NOTE: Make sure the plates (D) are in position on reassembly, if they are removed (see step 8 on page 18-39).

9. Remove the brake disc flathead screws (A).

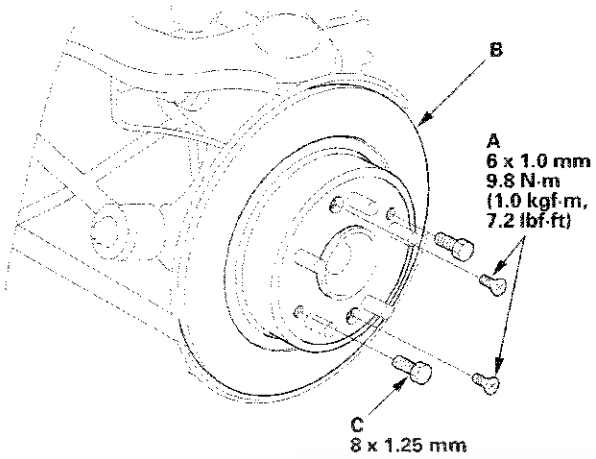

10. Remove the brake disc (B) from the hub bearing unit.

    NOTE: If the brake disc is stuck to the hub bearing unit, thread two 8 x 1.25 mm bolts (C) into the brake disc to push it away from the hub bearing unit. Turn each bolt 90 degrees at a time to prevent the brake disc from binding.

11. Install the brake disc in the reverse order of removal, and note these items:

    - Adjust the parking brake (see page 19-8).
    - Before installing the brake disc, clean the mating surfaces between the hub bearing unit and the inside of the brake disc.

12. Inspect the brake disc runout (see page 19-32).

13. After install the brake caliper, make sure the clearance between the lower arm B and parking brake cable is more than 5 mm (0.20 in.).

14. Clean the mating surfaces between the brake disc and the inside of the wheel, then install the rear wheel.

Conventional Brake Components

Rear Brake Caliper Overhaul

⚠CAUTION

Frequent inhalation of brake pad dust, regardless of material composition, could be hazardous to your health.
- Avoid breathing dust particles.
- Never use an air hose or brush to clean brake assemblies. Use an OSHA-approved vacuum cleaner.

Remove, disassemble, inspect, reassemble, and install the caliper, and note these items:

- Do not spill brake fluid on the vehicle; it may damage the paint; if brake fluid gets on the paint, wash it off immediately with water.
- To prevent dripping brake fluid, cover disconnected hose joints with rags or shop towels.
- Clean all parts in brake fluid and air dry; blow out all passages with compressed air.
- Before reassembling, check that all parts are free of dirt and other foreign particles.
- Replace parts with new ones as specified in the illustration.
- Make sure no dirt or other foreign matter gets in the brake fluid.
- Make sure no grease or oil gets on the brake discs or the pads.
- When reusing brake pads, always reinstall them in their original positions to prevent loss of braking efficiency.
- Do not reuse drained brake fluid. Use only clean Honda DOT 3 Brake Fluid from an unopened container. Using a non-Honda brake fluid can cause corrosion and shorten the life of the system.
- Coat the piston, the piston seal groove, and the caliper bore with clean brake fluid.
- Use recommended greases in the rear caliper set.
- After installing the caliper, check the brake hose and line for leaks, interference, and twisting.
- Make sure not to get any silicone grease on the terminal part of the connectors and switches, especially if you have silicone grease on your hands or gloves.

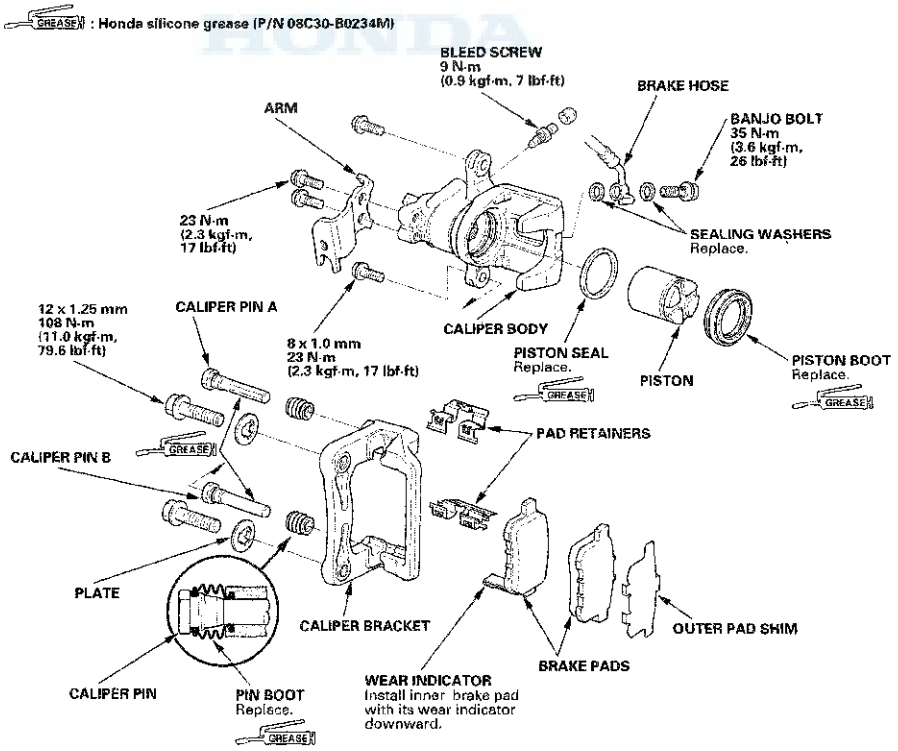

Brake Pedal Replacement

1. Disconnect the brake pedal position switch connector (A).

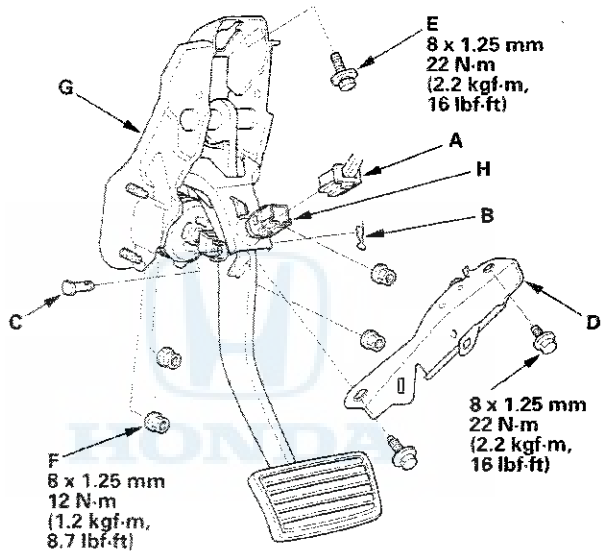

2. Remove the lock pin (B) and the clevis pin (C).

3. Remove the brake pedal support member (D).

4. Remove the brake pedal bracket mounting bolt (E) and nuts (F).

5. Remove the brake pedal with bracket (G).

6. Remove the brake pedal position switch (H) by turning it counterclockwise.

7. Install in the reverse order of removal.

8. Adjust the brake pedal and the brake pedal position switch (see page 19-6).

Conventional Brake Components

Brake Hose and Line Inspection

1. Inspect the brake hoses for damage, deterioration, leaks, interference, and twisting.
2. Check the brake lines for damage, rusting, and leaks. Also check for bent brake lines.
3. Check for leaks at hose and line joints and connections, and retighten if necessary.
4. Check the master cylinder and the VSA modulator-control unit for damage and leaks.

Connection Point	Component	Connected to	Specified Torque Value	Note
A	Front brake caliper	Brake hose	35 N·m (3.6 kgf·m, 26 lbf·ft)	Banjo bolt
		Bleed screw (NISSIN type)	9 N·m (0.9 kgf·m, 7 lbf·ft)	
		Bleed screw (AKEBONO type)	8 N·m (0.8 kgf·m, 6 lbf·ft)	
B	Rear brake caliper	Brake hose	35 N·m (3.6 kgf·m, 26 lbf·ft)	Banjo bolt
		Bleed screw	9 N·m (0.9 kgf·m, 7 lbf·ft)	
C	Brake hose	Brake line	15 N·m (1.5 kgf·m, 11 lbf·ft)	Flare nut
D	Master cylinder	Brake line	22 N·m (2.2 kgf·m, 16 lbf·ft)	Flare nut
E	VSA modulator-control unit	Brake line (12 mm nut)	22 N·m (2.2 kgf·m, 16 lbf·ft)	Flare nut
		Brake line (10 mm nut)	15 N·m (1.5 kgf·m, 11 lbf·ft)	

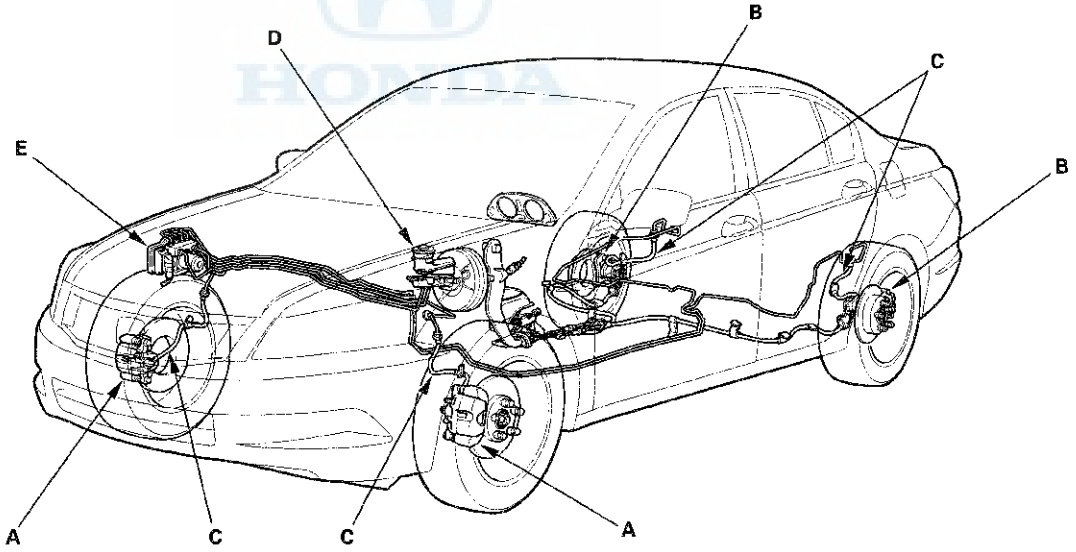

Brake Hose Replacement

NOTE:
- Before reassembling, check that all parts are free of dirt and other foreign particles.
- Replace parts with new ones whenever specified to do so.
- Do not spill brake fluid on the vehicle; it may damage the paint; if brake fluid gets on the paint, wash it off immediately with water.
- Plug the ends of the hoses and the joints to prevent spilling brake fluid.

Front

1. Remove the front wheel.

2. Disconnect the brake line (A) from the brake hose (B), then remove the brake hose clip (C).

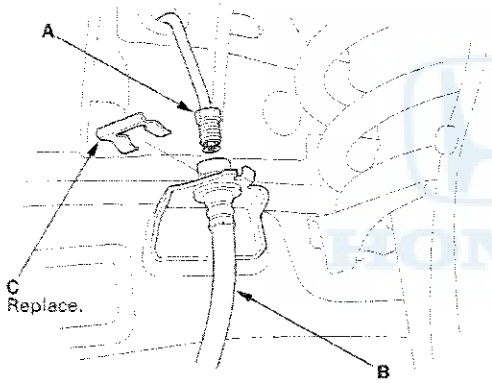

3. Remove the banjo bolt (A), and disconnect the brake hose (B) from the caliper.

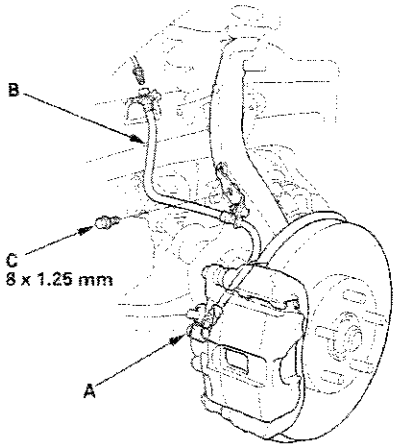

4. Remove the brake hose mounting bolt (C), then remove the brake hose.

5. Install the brake hose (A) with the mounting bolt (B).

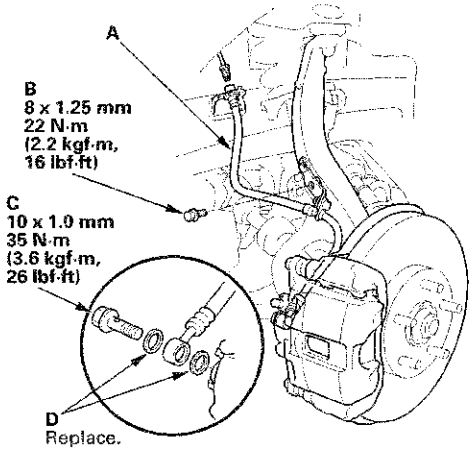

6. Connect the brake hose to the caliper with the banjo bolt (C) and new sealing washers (D).

7. Install a new brake hose clip (A) to the brake hose (B) on the bracket, then connect the brake line (C). Do not twist the brake hose.

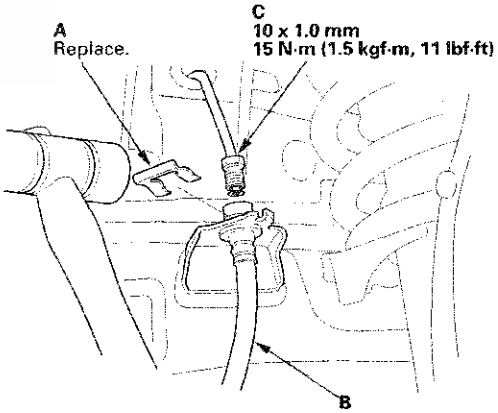

8. After installing the brake hose, bleed the brake system (see page 19-9).

9. Do the following checks:

   - Check the brake hose and line joint for leaks, and tighten if necessary.
   - Check the brake hoses for interference and twisting.

10. Clean the mating surfaces between the brake disc and the inside of the wheel, then install the front wheel.

(cont'd)

Brake Hose Replacement (cont'd)

Rear

1. Remove the rear wheel.

2. Disconnect the brake line (A) from the brake hose (B), then remove the brake hose clip (C).

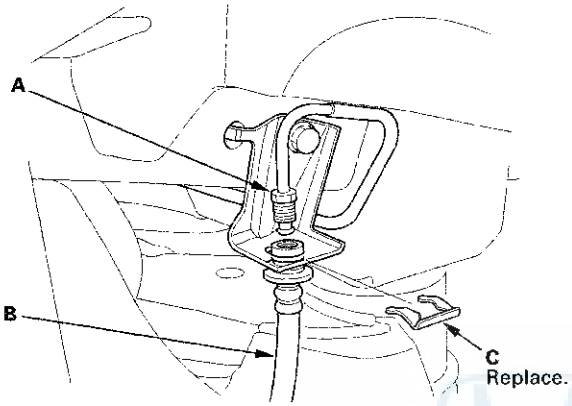

3. Remove the banjo bolt (A), and disconnect the brake hose from the caliper.

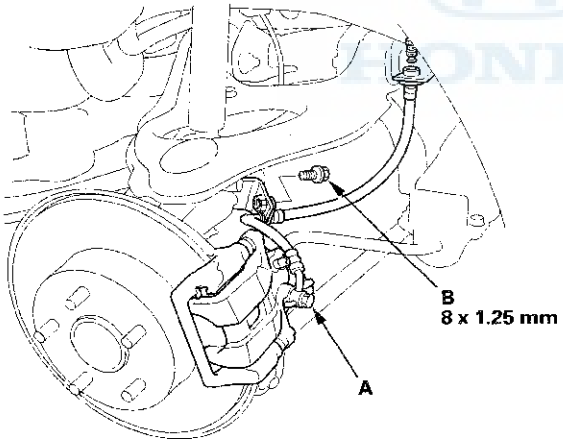

4. Remove the brake hose mounting bolt (B), then remove the brake hose.

5. Install the brake hose (A) with the mounting bolt (B).

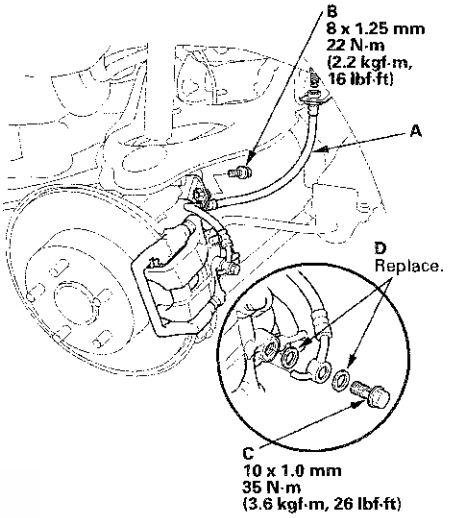

6. Connect the brake hose to the caliper with the banjo bolt (C) and new sealing washers (D).

7. Install a new brake hose clip (A) to the brake hose (B) on the bracket, then connect the brake line (C). Do not twist the brake hose.

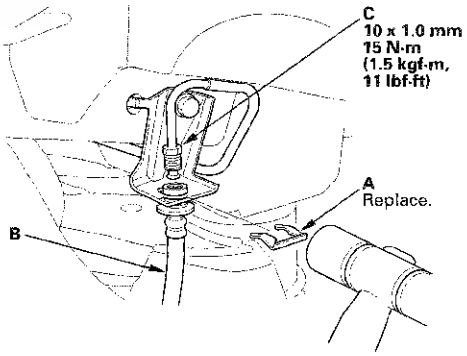

8. After installing the brake hoses, bleed the brake system (see page 19-9).

9. Do the following checks:

   - Check the brake hose and line joint for leaks, and tighten if necessary.
   - Check the brake hose for interference and twisting.

10. Clean the mating surfaces between the brake disc and the inside of the wheel, then install the rear wheel.

Parking Brake Cable Replacement

Exploded View

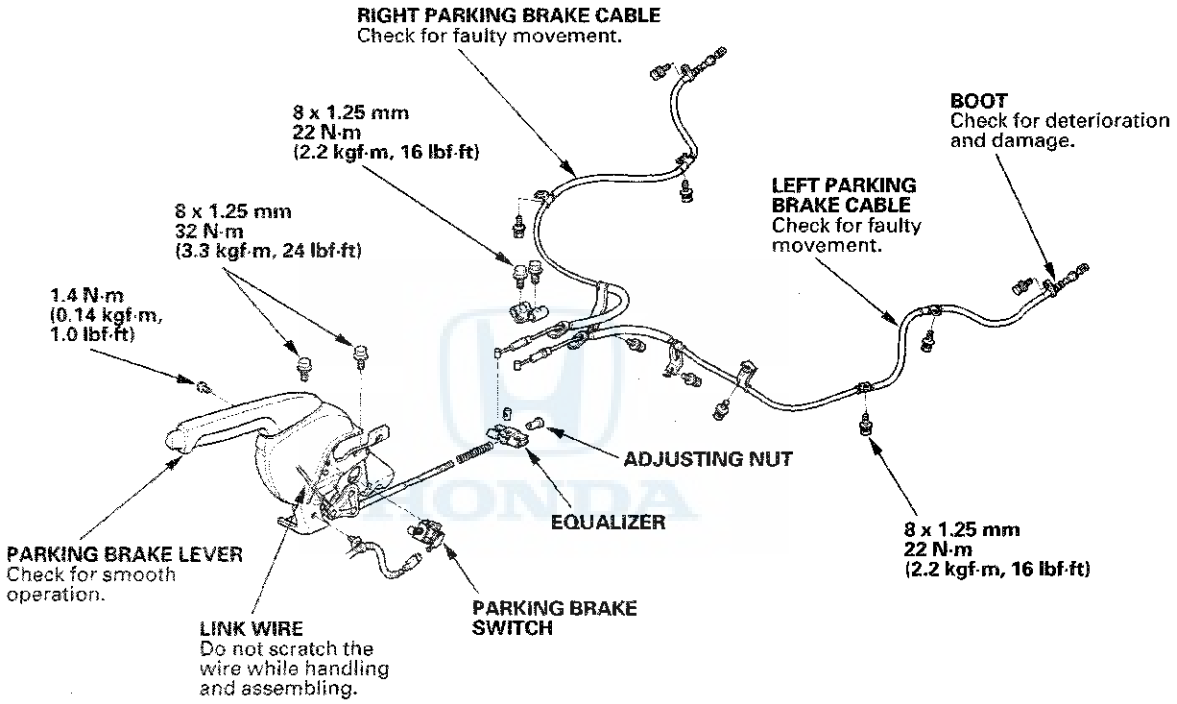

(cont'd)

Parking Brake Cable Replacement (cont'd)

NOTE:
- The parking brake cables must not be bent or distorted. This will lead to stiff operation and premature cable failure.
- Refer to the Exploded View as needed during this procedure.

1. Release the parking brake lever fully.

2. Loosen the parking brake cable adjusting nut (see page 19-8).

3. Remove the flange bolt (A) from the arm (B).

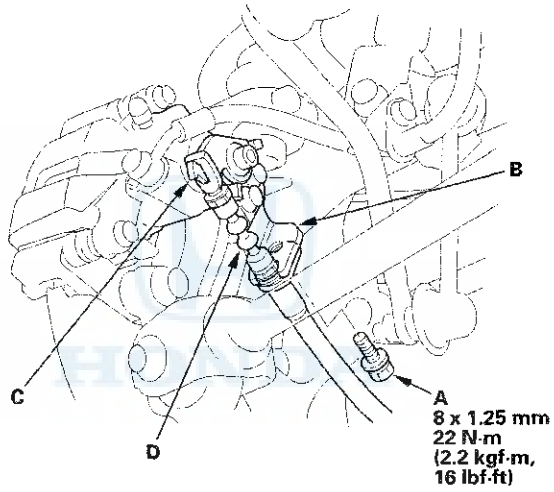

4. Disconnect the parking brake cable from the lever (C).

5. Remove the parking brake cable mounting hardware, then remove the cable.

6. Install the parking brake cable in the reverse order of removal, and note these items:

   - Be careful not to bend or distort the cable and boot (D).
   - Make sure the clearance between the lower arm B and parking brake cable is more than 5 mm (3/16 in.).
   - Adjust the parking brake (see page 19-8).

Navigation Tools: Click on the “Table of Contents” below, or use the Bookmarks to the left.

Brakes

Conventional Brake Components 19-1

VSA (Vehicle Stability Assist) System Components

Component Location Index 19-44
General Troubleshooting Information 19-46
DTC Troubleshooting Index 19-49
Symptom Troubleshooting Index 19-55
System Description 19-56
Circuit Diagram 19-64
DTC Troubleshooting 19-67
Symptom Troubleshooting 19-133
Steering Angle Sensor Replacement 19-137
Yaw Rate-Lateral Acceleration Sensor Replacement 19-138
VSA Sensor Neutral Position Memorization 19-138
VSA OFF Switch Test 19-139
VSA Modulator-Control Unit Update 19-140
VSA Modulator-Control Unit Removal and Installation 19-141
Wheel Speed Sensor Replacement 19-144

VSA System Components

Component Location Index

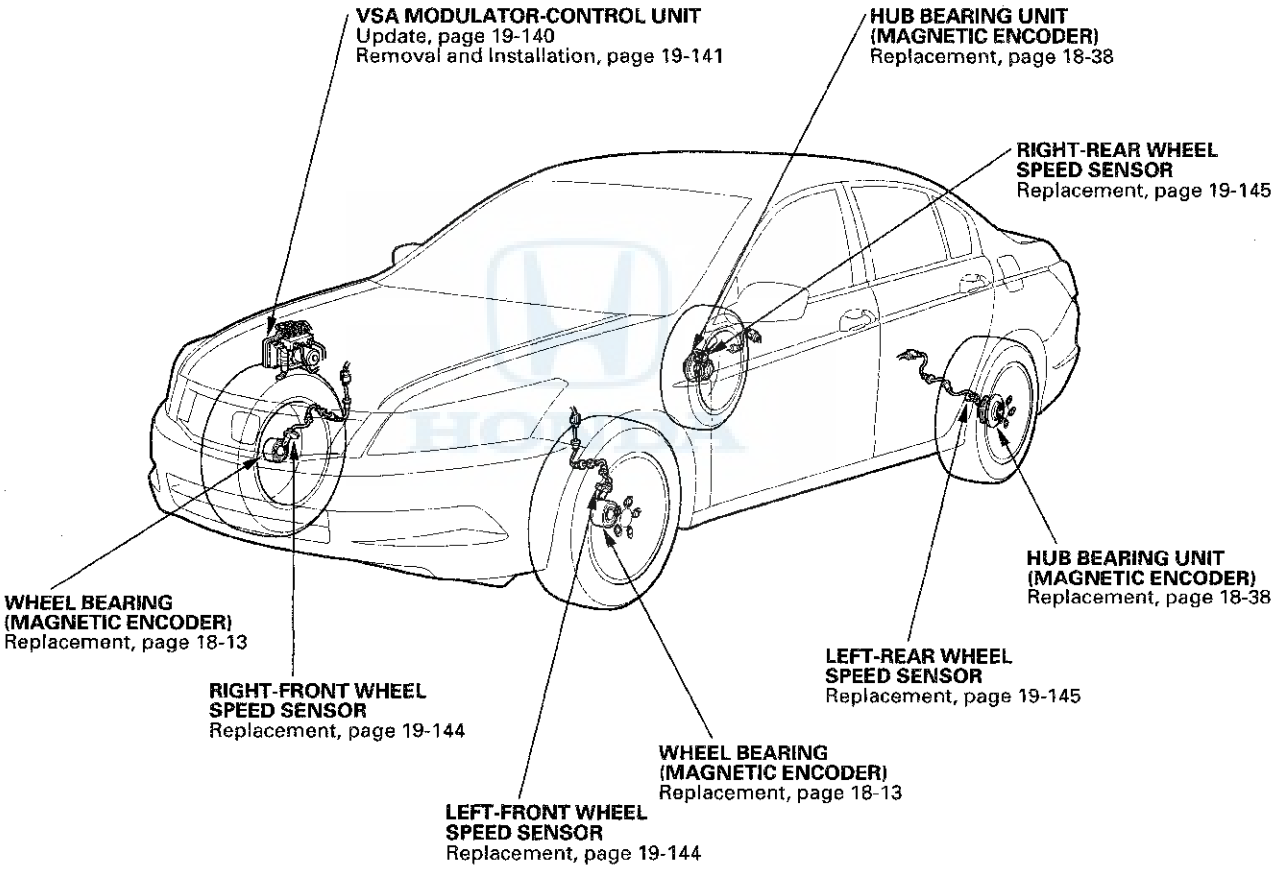

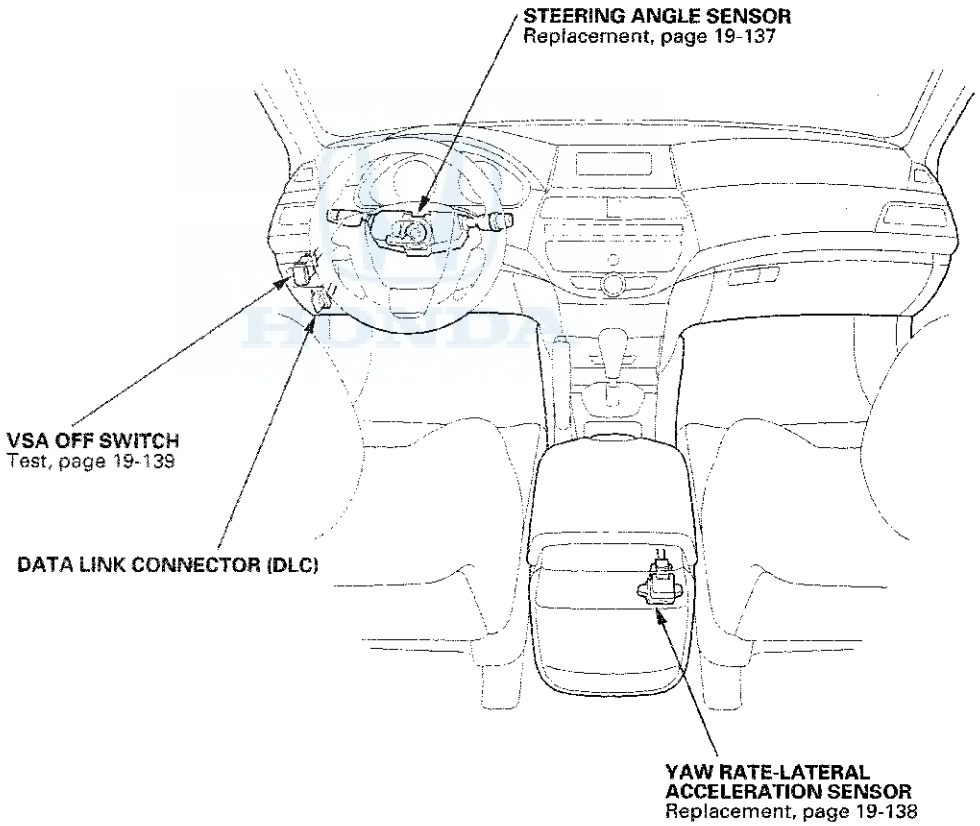
STEERING ANGLE SENSOR
Replacement, page 19-137
VSA OFF SWITCH
Test, page 19-139
DATA LINK CONNECTOR (DLC)
YAW RATE-LATERAL
ACCELERATION SENSOR
Replacement, page 19-138

VSA System Components

General Troubleshooting Information

System Indicator

This system has four indicators:

- ABS indicator (A)
- Brake system indicator (B)
- VSA indicator (C)
- VSA activation indicator (D)

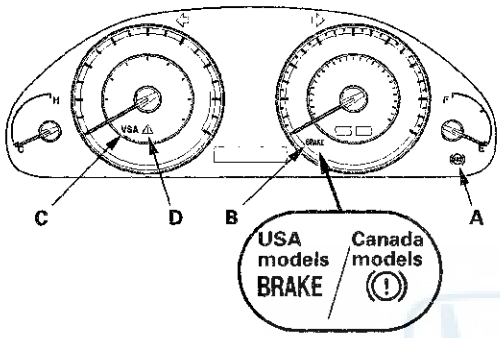

When the system is OK, each indicator comes on for about 2 seconds after turning the ignition switch to ON (II), then goes off.
When the system detects a problem, a DTC will be set and, depending upon the failure, the VSA modulator-control unit will determine which indicator(s) will be turned on. If the problem goes away (system returns to normal), the indicator(s) will be controlled in the following way depending upon the DTC that was set:

- The indicator(s) will come on and stay on when the ignition switch is ON (II).
- The indicator(s) will automatically go off.
- The indicator(s) will go off after the vehicle is driven.

ABS Indicator

The ABS indicator comes on when the ABS function is lost. The brakes still work like a conventional system.

Brake System Indicator

The brake system indicator comes on when the EBD function is lost, the parking brake is applied, and/or the brake fluid level is low.

NOTE: If two or more wheel speed sensors fail, the brake system indicator will come on.

VSA Indicator

The VSA indicator comes on when the VSA function is lost.

VSA Activation Indicator

The VSA activation indicator blinks when the VSA function is activating. The VSA activation indicator comes on and stays on when the VSA is turned OFF by using the VSA OFF switch, or when the VSA function is lost.

Diagnostic Trouble Code (DTC)

- The memory can hold all DTCs. However, when the same DTC is detected more than once, the more recent DTC is written over the earlier one. Therefore, when the same problem is detected repeatedly, it is memorized as a single DTC.
- The DTCs are indicated in ascending number order, not in the order they occur.
- The DTCs are memorized in the EEPROM. Therefore, the memorized DTCs cannot be erased by disconnecting the battery. Do the specified procedures to clear the DTCs.

Self-diagnosis

- Self-diagnosis can be classified into two categories:
  - Initial diagnosis: Done right after the ignition switch is turned to ON (II) and until the ABS and VSA indicators go off.
  - Regular diagnosis: Done right after the initial diagnosis until the ignition switch is turned to LOCK (0).
- When the system detects a problem, the VSA modulator-control unit shifts to fail-safe mode.

Kickback

The pump motor operates when the VSA modulator-control unit is functioning, and the fluid in the reservoir is forced out to the master cylinder, causing kickback at the brake pedal.

Pump Motor

- The pump motor operates when the VSA modulator-control unit is functioning.
- The VSA modulator-control unit checks the pump motor operation one time after completing initial diagnosis during regular diagnosis when the vehicle is driven over 10 mph (15 km/h).

Brake Fluid Replacement/Air Bleeding

Brake fluid replacement and air bleeding procedures are identical to the procedures used on vehicles without the VSA system (see page 19-9).

How to Troubleshoot DTCs

The troubleshooting procedures assume that the cause of the problem is still present and the ABS and/or VSA indicator is still on. Following a troubleshooting procedure for a code that has been cleared but does not reset can result in incorrect diagnosis.

1. Question the customer about the conditions when the problem occurred, and try to reproduce the same conditions for troubleshooting. Find out when the ABS and/or VSA indicator came on, such as during activation, after activation, when the vehicle was traveling at a certain speed, etc. If necessary, have the customer demonstrate the concern.

2. When the ABS or VSA indicator does not come on during the test-drive, check for loose connectors, poor contact of the terminals, etc. in the circuit indicated by the DTC before you start troubleshooting.

3. After troubleshooting, or the repairs are done, clear the DTCs, and test-drive the vehicle under the same conditions that originally set the DTCs. Make sure the ABS and VSA indicators do not come on.

4. Check for DTCs from other systems which are connected via F-CAN. If there are DTCs that are related to F-CAN, the most likely cause was that the ignition switch was turned to ON (II) with the VSA modulator-control unit connector disconnected. Clear the DTCs. Check for fuel and emissions codes first, then VSA codes.

Intermittent Failures

The term "intermittent failure" means a system may have had a failure, but it checks OK now. If the indicator(s) of the system does not come on, check for loose connectors or poor contacts in the terminals related to the circuit that you are troubleshooting.

(cont'd)

General Troubleshooting Information (cont'd)

How to Use the HDS (Honda Diagnostic System)

1. If the system indicators stay on, connect the HDS to the data link connector (DLC) (A) located under the driver's side of the dashboard.

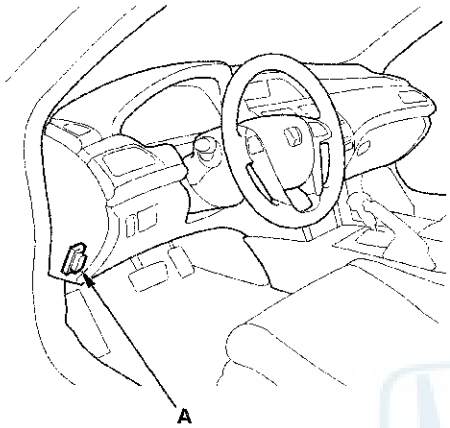

2. Turn the ignition switch to ON (II).
3. Make sure the HDS communicates with the vehicle and the VSA modulator-control unit. If it doesn't, troubleshoot the DLC circuit (see page 11-192).
4. Check the diagnostic trouble code (DTC) for all systems, troubleshoot the powertrain DTCs first and note it. Then refer to the indicated DTC's troubleshooting, and do the appropriate troubleshooting procedure.

   NOTE:
   - The HDS communication will be stopped when the vehicle speed is at 31 mph (50 km/h) or more.
   - The HDS can read the DTC, the current data, and other system data.
   - For specific operations, refer to the Help menu that came with the HDS.

How to Retrieve DTCs

1. With the ignition switch in LOCK (0), connect the HDS to the data link connector (DLC) under the driver's side of the dashboard.
2. Turn the ignition switch to ON (II).
3. Make sure the HDS communicates with the vehicle and the VSA modulator-control unit. If it doesn't troubleshoot the DLC circuit (see page 11-192).
4. Follow the prompts on the HDS to display the DTC(s) on the screen. After determining the DTC, refer to the DTC troubleshooting. Do the all systems DTC check, and troubleshoot any powertrain DTCs first.
5. Turn the ignition switch to LOCK (0).

How to Clear DTCs

1. With the ignition switch in LOCK (0), connect the HDS to the data link connector (DLC) under the driver's side of the dashboard.
2. Turn the ignition switch to ON (II).
3. Make sure the HDS communicates with the vehicle and the VSA modulator-control unit. If it doesn't troubleshoot the DLC circuit (see page 11-192).
4. Clear the DTC(s) by following the screen prompts on the HDS.
5. Turn the ignition switch to LOCK (0).

DTC Troubleshooting Index

DTC		Detection Item	ABS Indicator	Brake System Indicator	VSA Indicator	VSA Activation Indicator	Note
11	-13	Right-front Wheel Speed Sensor Circuit Malfunction	ON	ON/OFF*	ON	ON	(see page 19-67)
	-14	Right-front Wheel Speed Sensor Power Source Malfunction	ON	OFF	ON	ON	(see page 19-71)
12	-11	Right-front Wheel Speed Sensor Electrical Noise or Intermittent Interruption	ON	ON/OFF*	ON	ON	(see page 19-72)
	-12	Right-front Wheel Speed Sensor Short to the Other Sensor Circuit	ON	ON/OFF*	ON	ON	(see page 19-73)
	-21	Right-front Wheel Speed Sensor Installation Error	ON	ON/OFF*	ON	ON	(see page 19-74)
	-22	Right-front Wheel Speed Sensor Installation Error (19 mph (30 km/h) or More)	ON	ON/OFF*	ON	ON	(see page 19-75)
	-23	Right-front Wheel Speed Sensor Installation Error (0 to 9 mph (0 to 15 km/h))	ON	ON/OFF*	ON	ON	(see page 19-76)
13	-13	Left-front Wheel Speed Sensor Circuit Malfunction	ON	ON/OFF*	ON	ON	(see page 19-67)
	-14	Left-front Wheel Speed Sensor Power Source Malfunction	ON	OFF	ON	ON	(see page 19-71)
14	-11	Left-front Wheel Speed Sensor Electrical Noise or Intermittent Interruption	ON	ON/OFF*	ON	ON	(see page 19-72)
	-12	Left-front Wheel Speed Sensor Short to the Other Sensor Circuit	ON	ON/OFF*	ON	ON	(see page 19-73)
	-21	Left-front Wheel Speed Sensor Installation Error	ON	ON/OFF*	ON	ON	(see page 19-74)
	-22	Left-front Wheel Speed Sensor Installation Error (19 mph (30 km/h) or More)	ON	ON/OFF*	ON	ON	(see page 19-75)
	-23	Left-front Wheel Speed Sensor Installation Error (0 to 9 mph (0 to 15 km/h))	ON	ON/OFF*	ON	ON	(see page 19-76)
15	-13	Right-rear Wheel Speed Sensor Circuit Malfunction	ON	ON/OFF*	ON	ON	(see page 19-67)
	-14	Right-rear Wheel Speed Sensor Power Source Malfunction	ON	OFF	ON	ON	(see page 19-71)
16	-11	Right-rear Wheel Speed Sensor Electrical Noise or Intermittent Interruption	ON	ON/OFF*	ON	ON	(see page 19-72)
	-12	Right-rear Wheel Speed Sensor Short to the Other Sensor Circuit	ON	ON/OFF*	ON	ON	(see page 19-73)
	-21	Right-rear Wheel Speed Sensor Installation Error	ON	ON/OFF*	ON	ON	(see page 19-74)
	-22	Right-rear Wheel Speed Sensor Installation Error (19 mph (30 km/h) or More)	ON	ON/OFF*	ON	ON	(see page 19-75)
	-23	Right-rear Wheel Speed Sensor Installation Error (0 to 9 mph (0 to 15 km/h))	ON	ON/OFF*	ON	ON	(see page 19-76)
17	-13	Left-rear Wheel Speed Sensor Circuit Malfunction	ON	ON/OFF*	ON	ON	(see page 19-67)
	-14	Left-rear Wheel Speed Sensor Power Source Malfunction	ON	OFF	ON	ON	(see page 19-71)
18	-11	Left-rear Wheel Speed Sensor Electrical Noise or Intermittent Interruption	ON	ON/OFF*	ON	ON	(see page 19-72)
	-12	Left-rear Wheel Speed Sensor Short to the Other Sensor Circuit	ON	ON/OFF*	ON	ON	(see page 19-73)
	-21	Left-rear Wheel Speed Sensor Installation Error	ON	ON/OFF*	ON	ON	(see page 19-74)
	-22	Left-rear Wheel Speed Sensor Installation Error (19 mph (30 km/h) or More)	ON	ON/OFF*	ON	ON	(see page 19-75)
	-23	Left-rear Wheel Speed Sensor Installation Error (0 to 9 mph (0 to 15 km/h))	ON	ON/OFF*	ON	ON	(see page 19-76)
21	-11	Right-front Magnetic Encoder Malfunction (Pulse Missing)	ON	ON/OFF*	ON	ON	(see page 19-77)
22	-11	Left-front Magnetic Encoder Malfunction (Pulse Missing)	ON	ON/OFF*	ON	ON	(see page 19-77)
23	-11	Right-rear Magnetic Encoder Malfunction (Pulse Missing)	ON	ON/OFF*	ON	ON	(see page 19-77)
24	-11	Left-rear Magnetic Encoder Malfunction (Pulse Missing)	ON	ON/OFF*	ON	ON	(see page 19-77)

*: Brake system indicator turns ON when two or more wheels fail.

(cont'd)

DTC Troubleshooting Index (cont'd)

DTC		Detection Item	ABS Indicator	Brake System Indicator	VSA Indicator	VSA Activation Indicator	Note
25	-12	Yaw Rate Sensor Internal Circuit Malfunction (Open, Short)	OFF	OFF	ON	ON	(see page 19-78)
	-13	Yaw Rate Sensor Internal Circuit Malfunction	OFF	OFF	ON	ON	(see page 19-78)
	-17	Yaw Rate-Lateral Acceleration Sensor Power Source Voltage Malfunction	OFF	OFF	ON	ON	(see page 19-78)
	-18	Yaw Rate-Lateral Acceleration Sensor Internal Circuit Malfunction	OFF	OFF	ON	ON	(see page 19-78)
	-21	Yaw Rate Sensor Neutral Position Malfunction	OFF	OFF	ON	ON	(see page 19-78)
	-22	Yaw Rate Sensor Stuck	OFF	OFF	ON	ON	(see page 19-79)
	-23	Yaw Rate Sensor Circuit Intermittent Interruption	OFF	OFF	ON	ON	(see page 19-79)
	-24	Yaw Rate Sensor Gain Low	OFF	OFF	ON	ON	(see page 19-80)
	-25	Yaw Rate Sensor Gain High	OFF	OFF	ON	ON	(see page 19-80)
26	-12	Lateral Acceleration Sensor Internal Circuit Malfunction (Open, Short)	OFF	OFF	ON	ON	(see page 19-80)
	-13	Lateral Acceleration Sensor Internal Circuit Malfunction	OFF	OFF	ON	ON	(see page 19-80)
	-21	Lateral Acceleration Sensor Neutral Position Malfunction	OFF	OFF	ON	ON	(see page 19-80)
	-22	Lateral Acceleration Sensor Stuck	OFF	OFF	ON	ON	(see page 19-81)
	-23	Lateral Acceleration Sensor Circuit Intermittent Interruption	OFF	OFF	ON	ON	(see page 19-80)
	-24	Lateral Acceleration Sensor Gain Low	OFF	OFF	ON	ON	(see page 19-80)
	-25	Lateral Acceleration Sensor Gain High	OFF	OFF	ON	ON	(see page 19-80)
27	-11	Steering Angle Sensor DIAG Signal Error (Initial)	OFF	OFF	ON	ON	(see page 19-82)
	-21	Steering Angle Sensor Stuck Neutral Position	OFF	OFF	ON	ON	(see page 19-84)
	-22	Steering Angle Sensor Stuck Offset Position	OFF	OFF	ON	ON	(see page 19-84)
	-23	Steering Angle Sensor Counter Malfunction	OFF	OFF	ON	ON	(see page 19-85)
	-24	Steering Angle Sensor Exchange Malfunction	OFF	OFF	ON	ON	(see page 19-86)
	-26	Steering Angle Sensor DIAG Signal Error (Main)	OFF	OFF	ON	ON	(see page 19-82)
31	-01	ABS Right-front Inlet Solenoid Valve Malfunction (Solenoid Initial Pulse)	ON	ON	ON	ON	(see page 19-87)
	-02	ABS Right-front Inlet Solenoid Valve Malfunction (Initial Feedback Signal)	ON	ON	ON	ON	(see page 19-87)
	-11	ABS Right-front Inlet Solenoid Valve Malfunction (Feedback Signal)	ON	ON	ON	ON	(see page 19-87)
	-21	ABS Right-front Inlet Solenoid Valve Malfunction (Solenoid Pulse)	ON	ON	ON	ON	(see page 19-87)
	-22	ABS Right-front Inlet Solenoid Valve Malfunction (Solenoid Speculative)	ON	ON	ON	ON	(see page 19-87)
	-23	ABS Right-front Inlet Solenoid Valve Malfunction (Solenoid Stuck ON)	ON	ON	ON	ON	(see page 19-87)
	-24	ABS Right-front Inlet Solenoid Valve Malfunction (Feedback Signal/Solenoid Stuck ON)	ON	ON	ON	ON	(see page 19-87)
32	-01	ABS Right-front Outlet Solenoid Valve Malfunction (Solenoid Initial Pulse)	ON	ON	ON	ON	(see page 19-87)
	-21	ABS Right-front Outlet Solenoid Valve Malfunction (Solenoid Pulse)	ON	ON	ON	ON	(see page 19-87)
	-22	ABS Right-front Outlet Solenoid Valve Malfunction (Solenoid Speculative)	ON	ON	ON	ON	(see page 19-87)
	-23	ABS Right-front Outlet Solenoid Valve Malfunction (Solenoid Stuck ON)	ON	ON	ON	ON	(see page 19-87)
33	-01	ABS Left-front Inlet Solenoid Valve Malfunction (Solenoid Initial Pulse)	ON	ON	ON	ON	(see page 19-87)
	-02	ABS Left-front Inlet Solenoid Valve Malfunction (Initial Feedback Signal)	ON	ON	ON	ON	(see page 19-87)
	-11	ABS Left-front Inlet Solenoid Valve Malfunction (Feedback Signal)	ON	ON	ON	ON	(see page 19-87)
	-21	ABS Left-front Inlet Solenoid Valve Malfunction (Solenoid Pulse)	ON	ON	ON	ON	(see page 19-87)
	-22	ABS Left-front Inlet Solenoid Valve Malfunction (Solenoid Speculative)	ON	ON	ON	ON	(see page 19-87)
	-23	ABS Left-front Inlet Solenoid Valve Malfunction (Solenoid Stuck ON)	ON	ON	ON	ON	(see page 19-87)
	-24	ABS Left-front Inlet Solenoid Valve Malfunction (Feedback Signal/Solenoid Stuck ON)	ON	ON	ON	ON	(see page 19-87)

DTC		Detection Item	ABS Indicator	Brake System Indicator	VSA Indicator	VSA Activation Indicator	Note
34	-01	ABS Left-front Outlet Solenoid Valve Malfunction (Solenoid Initial Pulse)	ON	ON	ON	ON	(see page 19-87)
	-21	ABS Left-front Outlet Solenoid Valve Malfunction (Solenoid Pulse)	ON	ON	ON	ON	(see page 19-87)
	-22	ABS Left-front Outlet Solenoid Valve Malfunction (Solenoid Speculative)	ON	ON	ON	ON	(see page 19-87)
	-23	ABS Left-front Outlet Solenoid Valve Malfunction (Solenoid Stuck ON)	ON	ON	ON	ON	(see page 19-87)
35	-01	ABS Right-rear Inlet Solenoid Valve Malfunction (Solenoid Initial Pulse)	ON	ON	ON	ON	(see page 19-87)
	-02	ABS Right-rear Inlet Solenoid Valve Malfunction (Initial Feedback Signal)	ON	ON	ON	ON	(see page 19-87)
	-11	ABS Right-rear Inlet Solenoid Valve Malfunction (Feedback Signal)	ON	ON	ON	ON	(see page 19-87)
	-21	ABS Right-rear Inlet Solenoid Valve Malfunction (Solenoid Pulse)	ON	ON	ON	ON	(see page 19-87)
	-22	ABS Right-rear Inlet Solenoid Valve Malfunction (Solenoid Speculative)	ON	ON	ON	ON	(see page 19-87)
	-23	ABS Right-rear Inlet Solenoid Valve Malfunction (Solenoid Stuck ON)	ON	ON	ON	ON	(see page 19-87)
	-24	ABS Right-rear Inlet Solenoid Valve Malfunction (Feedback Signal/Solenoid Stuck ON)	ON	ON	ON	ON	(see page 19-87)
36	-01	ABS Right-rear Outlet Solenoid Valve Malfunction (Solenoid Initial Pulse)	ON	ON	ON	ON	(see page 19-87)
	-21	ABS Right-rear Outlet Solenoid Valve Malfunction (Solenoid Pulse)	ON	ON	ON	ON	(see page 19-87)
	-22	ABS Right-rear Outlet Solenoid Valve Malfunction (Solenoid Speculative)	ON	ON	ON	ON	(see page 19-87)
	-23	ABS Right-rear Outlet Solenoid Valve Malfunction (Solenoid Stuck ON)	ON	ON	ON	ON	(see page 19-87)
37	-01	ABS Left-rear Inlet Solenoid Valve Malfunction (Solenoid Initial Pulse)	ON	ON	ON	ON	(see page 19-87)
	-02	ABS Left-rear Inlet Solenoid Valve Malfunction (Initial Feedback Signal)	ON	ON	ON	ON	(see page 19-87)
	-11	ABS Left-rear Inlet Solenoid Valve Malfunction (Feedback Signal)	ON	ON	ON	ON	(see page 19-87)
	-21	ABS Left-rear Inlet Solenoid Valve Malfunction (Solenoid Pulse)	ON	ON	ON	ON	(see page 19-87)
	-22	ABS Left-rear Inlet Solenoid Valve Malfunction (Solenoid Speculative)	ON	ON	ON	ON	(see page 19-87)
	-23	ABS Left-rear Inlet Solenoid Valve Malfunction (Solenoid Stuck ON)	ON	ON	ON	ON	(see page 19-87)
	-24	ABS Left-rear Inlet Solenoid Valve Malfunction (Feedback Signal/Solenoid Stuck ON)	ON	ON	ON	ON	(see page 19-87)
38	-01	ABS Left-rear Outlet Solenoid Valve Malfunction (Solenoid Initial Pulse)	ON	ON	ON	ON	(see page 19-87)
	-21	ABS Left-rear Outlet Solenoid Valve Malfunction (Solenoid Pulse)	ON	ON	ON	ON	(see page 19-87)
	-22	ABS Left-rear Outlet Solenoid Valve Malfunction (Solenoid Speculative)	ON	ON	ON	ON	(see page 19-87)
	-23	ABS Left-rear Outlet Solenoid Valve Malfunction (Solenoid Stuck ON)	ON	ON	ON	ON	(see page 19-87)
41	-21	Right-front Wheel Lock	ON	ON/OFF*	ON	ON	(see page 19-88)
42	-21	Left-front Wheel Lock	ON	ON/OFF*	ON	ON	(see page 19-88)
43	-21	Right-rear Wheel Lock	ON	ON/OFF*	ON	ON	(see page 19-88)
44	-21	Left-rear Wheel Lock	ON	ON/OFF*	ON	ON	(see page 19-88)
51	-11	Motor Lock	ON	OFF	ON	ON	(see page 19-90)
	-12	Motor Drive Circuit Malfunction	ON	OFF	ON	ON	(see page 19-91)
	-13	Motor Drive Circuit Malfunction	ON	OFF	ON	ON	(see page 19-90)
52	-12	Motor Stuck OFF	ON	OFF	ON	ON	(see page 19-93)
53	-01	Motor Relay Stuck ON 1	ON	OFF	ON	ON	(see page 19-94)
	-12	Motor Relay Stuck ON 2	ON	OFF	ON	ON	(see page 19-94)

* : Brake system indicator turns ON when two or more wheels fail.

(cont'd)

DTC Troubleshooting Index (cont'd)

DTC		Detection Item	ABS Indicator	Brake System Indicator	VSA Indicator	VSA Activation Indicator	Note
54	-03	Fail-safe Relay 1 Stuck ON	ON	ON	ON	ON	(see page 19-95)
	-04	Fail-safe Relay 1 Stuck OFF (Initial)	ON	ON	ON	ON	(see page 19-95)
	-21	Fail-safe Relay 1 Stuck OFF (Main)	ON	ON	ON	ON	(see page 19-95)
56	-01	Initial VIG FET Stuck OFF (Initial)	ON	ON	ON	ON	(see page 19-97)
	-02	Initial VIG FET Stuck ON	ON	ON	ON	ON	(see page 19-97)
	-11	VIG FET Stuck OFF (Main)	ON	ON	ON	ON	(see page 19-97)
61	-01	VSA Modulator-control Unit Initial IG Low Voltage	ON	ON	ON	ON	(see page 19-98)
	-21	VSA Modulator-control Unit Power Source Low Voltage 1	ON	ON	ON	ON	(see page 19-98)
	-22	VSA Modulator-control Unit Power Source Low Voltage 2	ON	OFF	ON	ON	(see page 19-98)
	-23	VSA Modulator-control Unit Power Source Low Voltage 3	ON	ON	ON	ON	(see page 19-98)
62	-21	VSA Modulator-control Unit IG High Voltage	ON	ON	ON	ON	(see page 19-99)
64	-11	Steering Angle Sensor Power Circuit Low Voltage	ON	OFF	ON	ON	(see page 19-100)
	-12	Steering Angle Sensor Power Circuit High Voltage	ON	OFF	ON	ON	(see page 19-101)
65	-21	Brake Fluid Level Stuck ON	OFF	OFF	ON	ON	(see page 19-102)
66	-11	Pressure Sensor (Inside of VSA Modulator-control Unit) Malfunction	ON	OFF	ON	ON	(see page 19-104)
	-12	Pressure Sensor (Inside of VSA Modulator-control Unit) Malfunction	ON	OFF	ON	ON	(see page 19-105)
	-14	Pressure Sensor (Inside of VSA Modulator-control Unit) Malfunction	ON	OFF	ON	ON	(see page 19-104)
	-15	Pressure Sensor (Inside of VSA Modulator-control Unit) Malfunction	ON	OFF	ON	ON	(see page 19-108)
	-16	Pressure Sensor (Inside of VSA Modulator-control Unit) Malfunction	ON	OFF	ON	ON	(see page 19-104)
	-17	Pressure Sensor (Inside of VSA Modulator-control Unit) Malfunction	ON	OFF	ON	ON	(see page 19-104)
	-18	Pressure Sensor (Inside of VSA Modulator-control Unit) Malfunction	ON	OFF	ON	ON	(see page 19-104)
	-19	Pressure Sensor (Inside of VSA Modulator-control Unit) Malfunction	ON	OFF	ON	ON	(see page 19-104)
68	-21	Brake Pedal Position Switch Stuck OFF	OFF	OFF	ON	ON	(see page 19-109)
	-22	Brake Pedal Position Switch Stuck ON	OFF	OFF	ON	ON	(see page 19-112)
71	-21	Right-front or Left-rear Different Diameter Tire Malfunction	ON	ON	ON	ON	(see page 19-114)
	-22	Left-front or Right-rear Different Diameter Tire Malfunction	ON	ON	ON	ON	(see page 19-114)
	-23	Right-front and Right-rear Different Diameter Tire Malfunction	ON	ON	ON	ON	(see page 19-114)
	-24	Left-front and Left-rear Different Diameter Tire Malfunction	ON	ON	ON	ON	(see page 19-114)
	-25	Right-front and Left-front Different Diameter Tire Malfunction	ON	ON	ON	ON	(see page 19-114)
	-26	Right-rear and Left-rear Different Diameter Tire Malfunction	ON	ON	ON	ON	(see page 19-114)
	-27	Right-front or Left-rear Different Diameter Tire Malfunction	OFF	OFF	ON	ON	(see page 19-114)
	-28	Left-front or Right-rear Different Diameter Tire Malfunction	OFF	OFF	ON	ON	(see page 19-114)
	-29	Right-front and Right-rear Different Diameter Tire Malfunction	OFF	OFF	ON	ON	(see page 19-114)
	-2A	Left-front and Left-rear Different Diameter Tire Malfunction	OFF	OFF	ON	ON	(see page 19-114)
	-2B	Right-front and Left-front Different Diameter Tire Malfunction	OFF	OFF	ON	ON	(see page 19-114)
	-2C	Right-rear and Left-rear Different Diameter Tire Malfunction	OFF	OFF	ON	ON	(see page 19-114)

DTC		Detection Item	ABS Indicator	Brake System Indicator	VSA Indicator	VSA Activation Indicator	Note
81	-01	Central Processing Unit (CPU) Internal Circuit Malfunction	ON	ON	ON	ON	(see page 19-115)
	-02	Central Processing Unit (CPU) Internal Circuit Malfunction	ON	ON	ON	ON	(see page 19-115)
	-03	Central Processing Unit (CPU) Internal Circuit Malfunction	ON	ON	ON	ON	(see page 19-115)
	-05	Central Processing Unit (CPU) Internal Circuit Malfunction	ON	ON	ON	ON	(see page 19-115)
	-06	Central Processing Unit (CPU) Internal Circuit Malfunction	ON	ON	ON	ON	(see page 19-115)
	-07	Central Processing Unit (CPU) Internal Circuit Malfunction	ON	ON	ON	ON	(see page 19-116)
	-09	Central Processing Unit (CPU) Internal Circuit Malfunction	ON	ON	ON	ON	(see page 19-115)
	-11	Central Processing Unit (CPU) Internal Circuit Malfunction	ON	ON	ON	ON	(see page 19-117)
	-21	Central Processing Unit (CPU) Internal Circuit Malfunction	ON	ON	ON	ON	(see page 19-115)
	-22	Central Processing Unit (CPU) Internal Circuit Malfunction	ON	ON	ON	ON	(see page 19-115)
	-23	Central Processing Unit (CPU) Internal Circuit Malfunction	ON	ON	ON	ON	(see page 19-115)
	-24	Central Processing Unit (CPU) Internal Circuit Malfunction	ON	ON	ON	ON	(see page 19-115)
	-25	Central Processing Unit (CPU) Internal Circuit Malfunction	ON	ON	ON	ON	(see page 19-115)
	-31	Central Processing Unit (CPU) Internal Circuit Malfunction	ON	ON	ON	ON	(see page 19-115)
	-32	Central Processing Unit (CPU) Internal Circuit Malfunction	ON	ON	ON	ON	(see page 19-115)
	-33	Central Processing Unit (CPU) Internal Circuit Malfunction	ON	ON	ON	ON	(see page 19-115)
	-35	Central Processing Unit (CPU) Internal Circuit Malfunction	ON	ON	ON	ON	(see page 19-115)
	-36	Central Processing Unit (CPU) Internal Circuit Malfunction	ON	ON	ON	ON	(see page 19-115)
	-37	Central Processing Unit (CPU) Internal Circuit Malfunction	ON	ON	ON	ON	(see page 19-115)
	-38	Central Processing Unit (CPU) Internal Circuit Malfunction	ON	ON	ON	ON	(see page 19-115)
	-39	Central Processing Unit (CPU) Internal Circuit Malfunction	ON	ON	ON	ON	(see page 19-115)
	-3A	Central Processing Unit (CPU) Internal Circuit Malfunction	ON	ON	ON	ON	(see page 19-115)
	-3C	Central Processing Unit (CPU) Internal Circuit Malfunction	ON	ON	ON	ON	(see page 19-115)
	-3D	Central Processing Unit (CPU) Internal Circuit Malfunction	ON	ON	ON	ON	(see page 19-120)
	-3E	Central Processing Unit (CPU) Internal Circuit Malfunction	ON	ON	ON	ON	(see page 19-120)
	-42	Central Processing Unit (CPU) Internal Circuit Malfunction	ON	ON	ON	ON	(see page 19-115)
	-51	Central Processing Unit (CPU) Internal Circuit Malfunction	ON	ON	ON	ON	(see page 19-118)
	-52	Central Processing Unit (CPU) Internal Circuit Malfunction	ON	ON	ON	ON	(see page 19-117)

(cont'd)

DTC Troubleshooting Index (cont'd)

DTC		Detection Item	ABS Indicator	Brake System Indicator	VSA Indicator	VSA Activation Indicator	Note
81	-53	Central Processing Unit (CPU) Internal Circuit Malfunction	ON	ON	ON	ON	(see page 19-118)
	-54	Central Processing Unit (CPU) Internal Circuit Malfunction	ON	ON	ON	ON	(see page 19-117)
	-55	Central Processing Unit (CPU) Internal Circuit Malfunction	ON	ON	ON	ON	(see page 19-118)
	-56	Central Processing Unit (CPU) Internal Circuit Malfunction	ON	ON	ON	ON	(see page 19-117)
	-57	Central Processing Unit (CPU) Internal Circuit Malfunction	ON	ON	ON	ON	(see page 19-118)
	-58	Central Processing Unit (CPU) Internal Circuit Malfunction	ON	ON	ON	ON	(see page 19-117)
	-59	Central Processing Unit (CPU) Internal Circuit Malfunction	ON	ON	ON	ON	(see page 19-120)
	-71	Central Processing Unit (CPU) Internal Circuit Malfunction	ON	OFF	ON	ON	(see page 19-115)
	-72	Central Processing Unit (CPU) Internal Circuit Malfunction	ON	ON	ON	ON	(see page 19-115)
	-80	Central Processing Unit (CPU) Internal Circuit Malfunction	ON	ON	ON	ON	(see page 19-115)
83	-13	ECM/PCM Communication Error (Engine Malfunction)	OFF	OFF	ON	ON	(see page 19-121)
	-14*1	ECM/PCM Communication Error (A/T Malfunction)	OFF	OFF	ON	ON	(see page 19-121)
84	-21	VSA Sensor Neutral Position not Writing	OFF	OFF	ON	ON	(see page 19-122)
86	-01	F-CAN Bus-off Malfunction	OFF	OFF	ON	ON	(see page 19-123)
	-11	F-CAN Communication with ECM/PCM Malfunction	OFF	OFF	ON	ON	(see page 19-124)
	-21	F-CAN Communication with Engine Malfunction	OFF	OFF	ON	ON	(see page 19-124)
	-22	F-CAN Communication with Engine Malfunction	OFF	OFF	ON	ON	(see page 19-124)
	-23	F-CAN Communication with Engine Malfunction	OFF	OFF	ON	ON	(see page 19-124)
	-24	F-CAN Communication with Engine Malfunction	OFF	OFF	ON	ON	(see page 19-124)
	-25	F-CAN Communication with Engine Malfunction	OFF	OFF	ON	ON	(see page 19-124)
	-31	F-CAN Communication with Gauge Control Module Malfunction	OFF	OFF	ON	ON	(see page 19-126)
	-41*1	F-CAN Communication with EAT Malfunction	OFF	OFF	ON	ON	(see page 19-124)
	-71	F-CAN Communication with Yaw Rate-Lateral Acceleration Sensor Malfunction	OFF	OFF	ON	ON	(see page 19-128)
107	-22	Central Processing Unit (CPU) Internal Circuit Malfunction	OFF	OFF	OFF	ON	(see page 19-130)
108	-21	Steering Angle Sensor Malfunction	OFF	OFF	OFF	ON	(see page 19-131)
121	-01	VSA Solenoid Valve Malfunction	ON	ON	ON	ON	(see page 19-132)
	-02	VSA Solenoid Valve Malfunction	ON	ON	ON	ON	(see page 19-132)
	-11	VSA Solenoid Valve Malfunction	ON	ON	ON	ON	(see page 19-132)
	-21	VSA Solenoid Valve Malfunction	ON	ON	ON	ON	(see page 19-132)
	-24	VSA Solenoid Valve Malfunction	ON	ON	ON	ON	(see page 19-132)
122	-01	VSA Solenoid Valve Malfunction	ON	ON	ON	ON	(see page 19-132)
	-21	VSA Solenoid Valve Malfunction	ON	ON	ON	ON	(see page 19-132)
	-22	VSA Solenoid Valve Malfunction	ON	ON	ON	ON	(see page 19-132)
	-23	VSA Solenoid Valve Malfunction	ON	ON	ON	ON	(see page 19-132)
123	-01	VSA Solenoid Valve Malfunction	ON	ON	ON	ON	(see page 19-132)
	-02	VSA Solenoid Valve Malfunction	ON	ON	ON	ON	(see page 19-132)
	-11	VSA Solenoid Valve Malfunction	ON	ON	ON	ON	(see page 19-132)
	-21	VSA Solenoid Valve Malfunction	ON	ON	ON	ON	(see page 19-132)
	-24	VSA Solenoid Valve Malfunction	ON	ON	ON	ON	(see page 19-132)
124	-01	VSA Solenoid Valve Malfunction	ON	ON	ON	ON	(see page 19-132)
	-21	VSA Solenoid Valve Malfunction	ON	ON	ON	ON	(see page 19-132)
	-22	VSA Solenoid Valve Malfunction	ON	ON	ON	ON	(see page 19-132)
	-23	VSA Solenoid Valve Malfunction	ON	ON	ON	ON	(see page 19-132)

* 1: A/T

Symptom Troubleshooting Index

When the vehicle has one of these symptoms, check for VSA diagnostic trouble codes (DTCs) with the HDS. If there are no DTCs, do the diagnostic procedure for the symptom, in the sequence listed, until you find the cause.

Symptom	Diagnostic procedure
HDS does not communicate with the VSA modulator-control unit or the vehicle	Troubleshoot the DLC circuit (see page 11-192).
VSA activation indicator does not come on at start-up (bulb check)	1. Do the gauge control module troubleshooting (see page 22-304). 2. Update the VSA modulator-control unit if it does not have the latest software (see page 19-140), or substitute a known-good VSA modulator-control unit (see page 19-141), then retest. If it is OK, the VSA modulator-control unit was updated, troubleshooting is complete. If the VSA modulator-control unit was substituted, replace the original VSA modulator-control unit (see page 19-141).
VSA activation indicator does not go off, and no DTCs are stored	1. Symptom troubleshooting (see page 19-133). 2. Update the VSA modulator-control unit if it does not have the latest software (see page 19-140), or substitute a known-good VSA modulator-control unit (see page 19-141), then retest. If it is OK, the VSA modulator-control unit was updated, troubleshooting is complete. If the VSA modulator-control unit was substituted, replace the original VSA modulator-control unit (see page 19-141).
ABS indicator, brake system indicator, and VSA indicator do not come on	1. Do the gauge control module troubleshooting (see page 22-304). 2. Update the VSA modulator-control unit if it does not have the latest software (see page 19-140), or substitute a known-good VSA modulator-control unit (see page 19-141), then retest. If it is OK, the VSA modulator-control unit was updated, troubleshooting is complete. If the VSA modulator-control unit was substituted, replace the original VSA modulator-control unit (see page 19-141).
ABS indicator, brake system indicator, and VSA indicator do not go off	1. Check for F-CAN DTCs, and troubleshoot and repair those first (see page 11-3). 2. Do the gauge control module troubleshooting (see page 22-304). 3. Symptom troubleshooting (see page 19-134).

VSA System Components

System Description

VSA Modulator-Control Unit Inputs and Outputs for 36P Connector

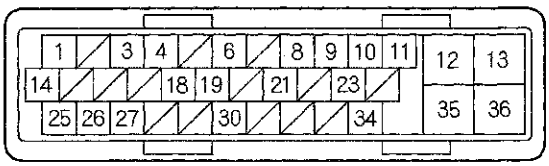

Wire side of female terminals

Terminal number	Wire color	Terminal sign	Description	Signal
1	RED	CAN-L	F-CAN communication circuit	———
3	LT BLU	K-LINE	Communication with HDS	
4	PUR	RR-GND	Detects right-rear wheel speed sensor signal	
6	GRN	FL-GND	Detects left-front wheel speed sensor signal	
8	RED	RL-GND	Detects left-rear wheel speed sensor signal	
9	ORN	SVCC	Power source for the steering angle sensor	With ignition switch ON (II): about 5.0 V
10	PUR	FR-GND	Detects right-front wheel speed sensor signal	———
11	GRN	STR-A	Detects steering angle sensor signal	
12	WHT	FSR +B	Power source for the fail-safe relay	Battery voltage at all times
13	RED	MR +B	Power source for the motor relay	Battery voltage at all times
14	WHT	CAN-H	F-CAN communication circuit	———
18	PNK	RR +B	Detects right-rear wheel speed sensor signal	
19	ORN	FL +B	Detects left-front wheel speed sensor signal	

Terminal number	Wire color	Terminal sign	Description	Signal
21	BLU	RL +B	Detects left-rear wheel speed sensor signal	———
23	LT GRN	FR +B	Detects right-front wheel speed sensor signal	
25	RED	WEN	Detects write enable signal	
26	BLU	STR-D	Detects steering angle sensor signal	
27	LT GRN	STR-B	Detects steering angle sensor signal	
30	GRY	IG1	Power source for activating the system	With ignition switch ON (II): battery voltage
34	BRN	SGND	Ground for the steering angle sensor	———
35	BLK	GND	Ground for the VSA modulator-control unit	Countinuity
36	BLK	MR-GND	Ground for the pump motor	Countinuity

HONDA

(cont'd)

System Description (cont'd)

System Outline

This system is composed of the VSA modulator-control unit, the wheel speed sensors, the steering angle sensor, the yaw rate-lateral acceleration sensor, and the system indicators in the gauge control module. The VSA modulator-control unit controls the ABS, EBD, TCS, VSA, and brake assist with the brake pressure of each wheel and reduces engine torque.

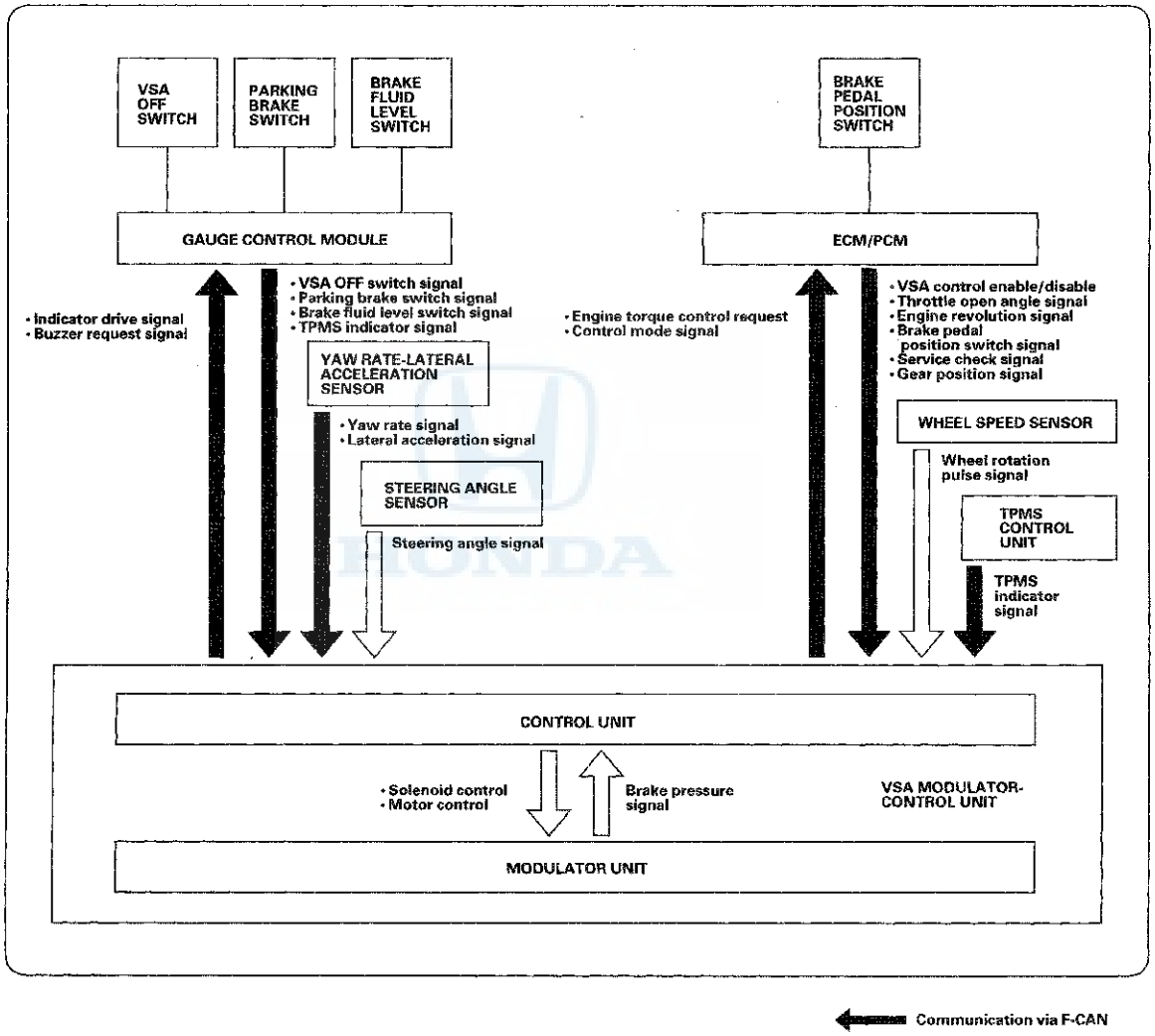

ABS Features

Anti-lock Control

Without ABS, when the brake pedal is pressed while driving, the wheels sometimes lock before the vehicle comes to a stop. In such an event, the maneuverability of the vehicle is reduced if the front wheels are locked, and the stability of the vehicle is reduced if the rear wheels are locked, creating an extremely unstable condition. With ABS, the system precisely controls the slip rate of the wheels to ensure maximum grip force from the tires, and it thereby ensures maneuverability and stability of the vehicle. The ABS calculates the slip rate of the wheels based on the four wheel speeds, and then it controls the brake fluid pressure to reach the target slip rate.

Grip force of tire and road surface

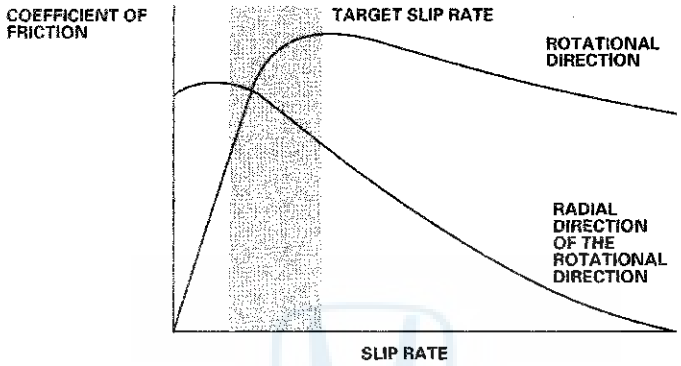

Main Control

The control unit detects the wheel speed based on the wheel speed sensor signals it receives, then it calculates the vehicle speed based on the detected wheel speed. The control unit detects the vehicle speed during deceleration based on the wheel speeds.

The control unit calculates the slip rate of each wheel, and transmits the control signal to the modulator unit solenoid valve when the slip rate is high.

The hydraulic control has three modes: Pressure intensifying, pressure reducing, and pressure retaining.

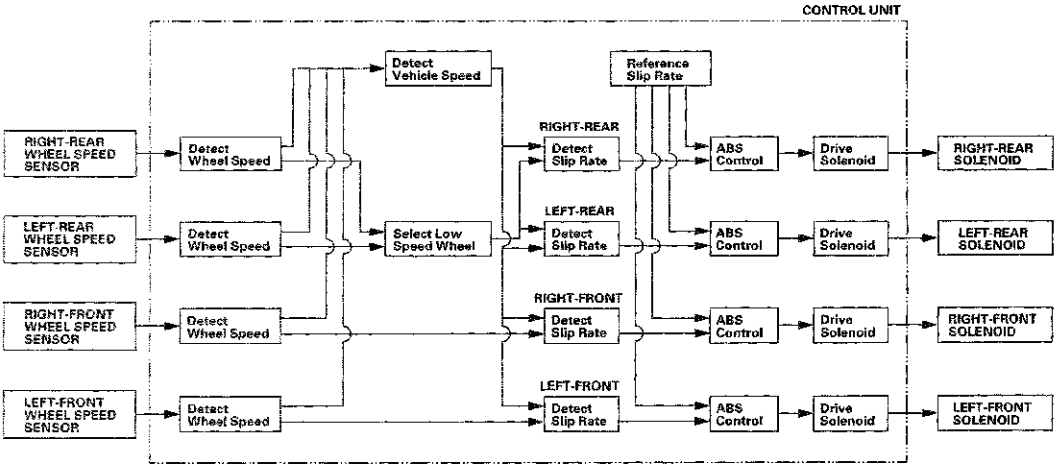

(cont'd)

System Description (cont'd)

EBD Features

The electronic brake distribution (EBD) feature helps control vehicle braking by adjusting the rear brake force in accordance with the rear wheel load before the ABS operates. Based on the wheel speed sensor signals, the control unit uses the modulator to control the rear brakes individually. When the rear wheel speed is less than the front wheel speed, the VSA modulator-control unit retains the current rear brake fluid pressure by closing the inlet valve in the modulator. As the rear wheel speed increases and approaches the front wheel speed, the VSA modulator-control unit increases the rear brake fluid pressure by momentarily opening the inlet valve. This whole process is repeated very rapidly. While this is happening, kickback may be felt at the brake pedal.

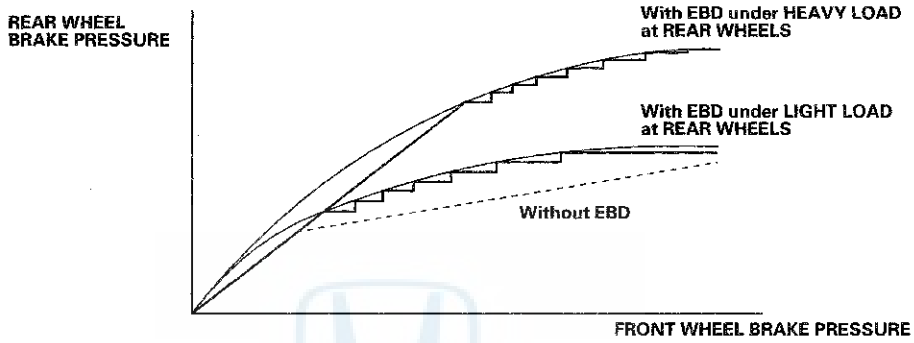

TCS Features

When a drive wheel loses traction on a slippery road surface and starts to spin, the VSA modulator-control unit applies brake pressure to the spinning wheel and sends an engine torque control request to the ECM/PCM to slow the spinning wheel and keep traction.

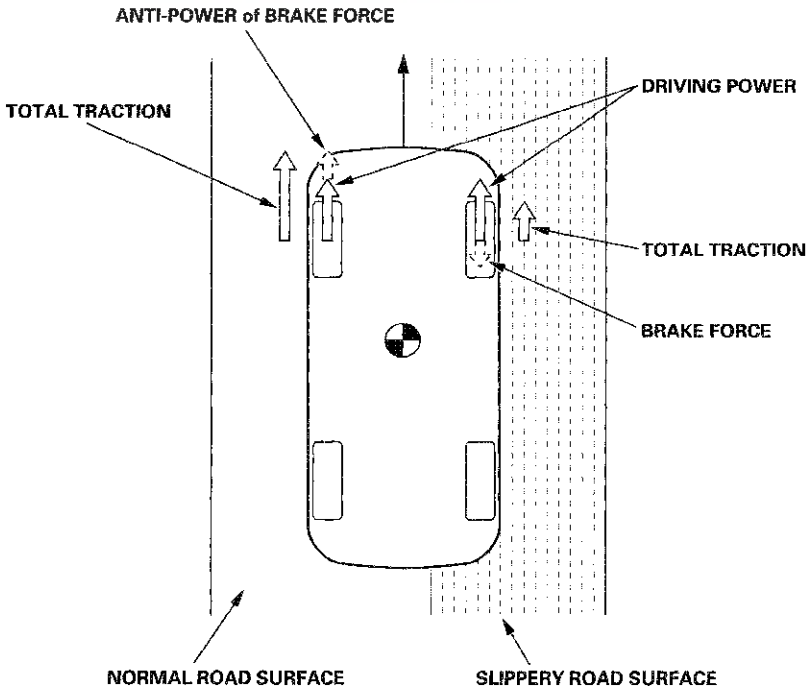

VSA System Features

Oversteer control
Applies the brake to the front and rear outside wheels

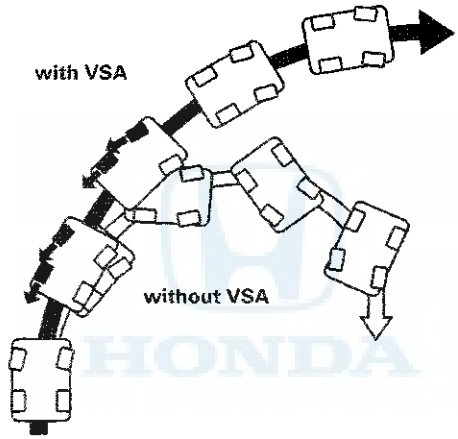

The brake makes the yaw rate opposite to the turning direction

Understeer control
- Applies the brake to the rear inside wheel
- Controls the engine torque when accelerating

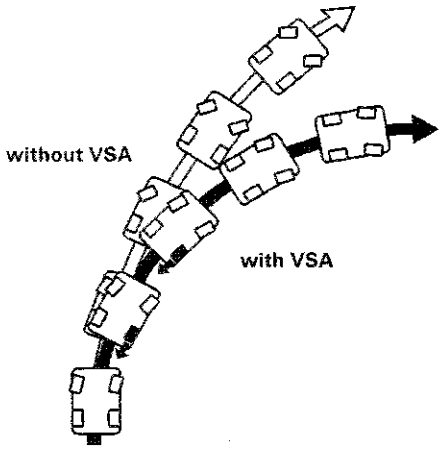

The brake increases the yaw rate toward the turning direction

The throttle control effect;
- **reduces vehicle speed**
- **increases cornering force**

System Description (cont'd)

Brake Assist Features

Brake assist helps ensure that any driver can achieve the full braking potential of the vehicle by increasing brake system pressure in a panic situation, bringing the vehicle into a full ABS stop.
If during a panic stop the VSA modulator-control unit determines that the brake system pressure increases above a threshold in less than a certain amount of time, the VSA modulator-control unit engages brake assist.
Because the brake system pressure crossed the pressure threshold before the time threshold had expired, the VSA modulator-control unit goes into brake assist mode.

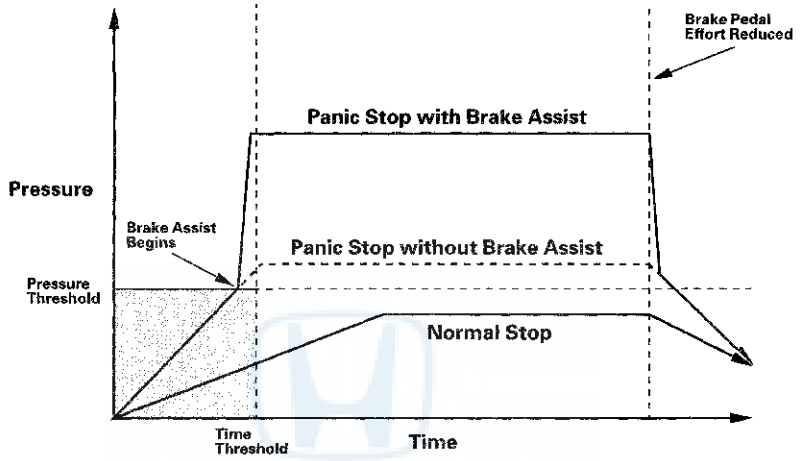

Modulator Unit

The modulator unit consists of the inlet solenoid valve, the outlet solenoid valve, the VSA NO (normally open) solenoid valve, the VSA NC (normally closed) solenoid valve, the reservoir, the pump, and the pump motor.
The hydraulic control has three modes of ABS action; pressure intensifying, pressure retaining, and pressure reducing.
Pressure intensifying mode (VSA) is a combination of the TCS, VSA, and brake assist action.
The hydraulic circuit is an independent four channel type; one channel for each wheel.

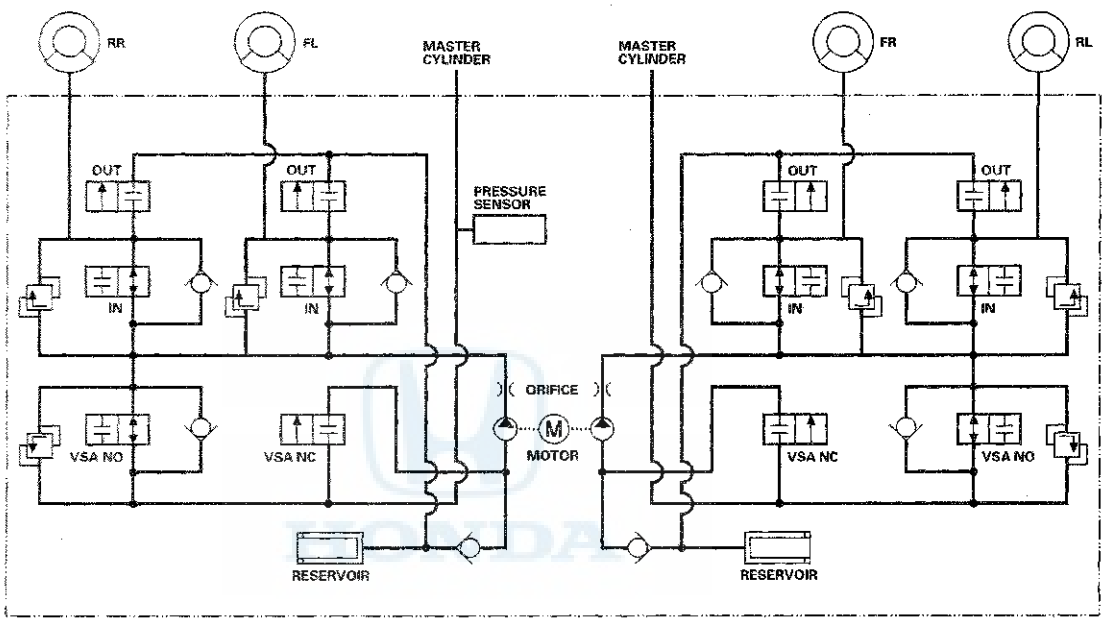

IN: INLET SOLENOID VALVE (NORMALLY OPEN)
OUT: OUTLET SOLENOID VALVE (NORMALLY CLOSED)

Mode	VSA NO Valve	VSA NC Valve	Inlet Solenoid Valve	Outlet Solenoid Valve	Brake Fluid
Pressure intensifying mode	open	closed	open	closed	Master cylinder fluid is pumped out to the caliper.
Pressure retaining mode	open	closed	closed	closed	Caliper fluid is retained by the inlet and outlet valves.
Pressure reducing mode	open	closed	closed	open	• Caliper fluid flows through the outlet valve to the reservoir. • The motor pumps the reservoir fluid through the damping chamber to the master cylinder*.
Pressure intensifying mode (VSA)	closed	open	open	closed	• Master cylinder fluid is pumped out by pump with motor through VSA NC valve to the caliper. • Caliper fluid pressure exceeds master cylinder pressure.

* : The motor will keep running until the operation of the one anti-lock brake control is finished with the first pressure reducing mode.

VSA System Components

Circuit Diagram

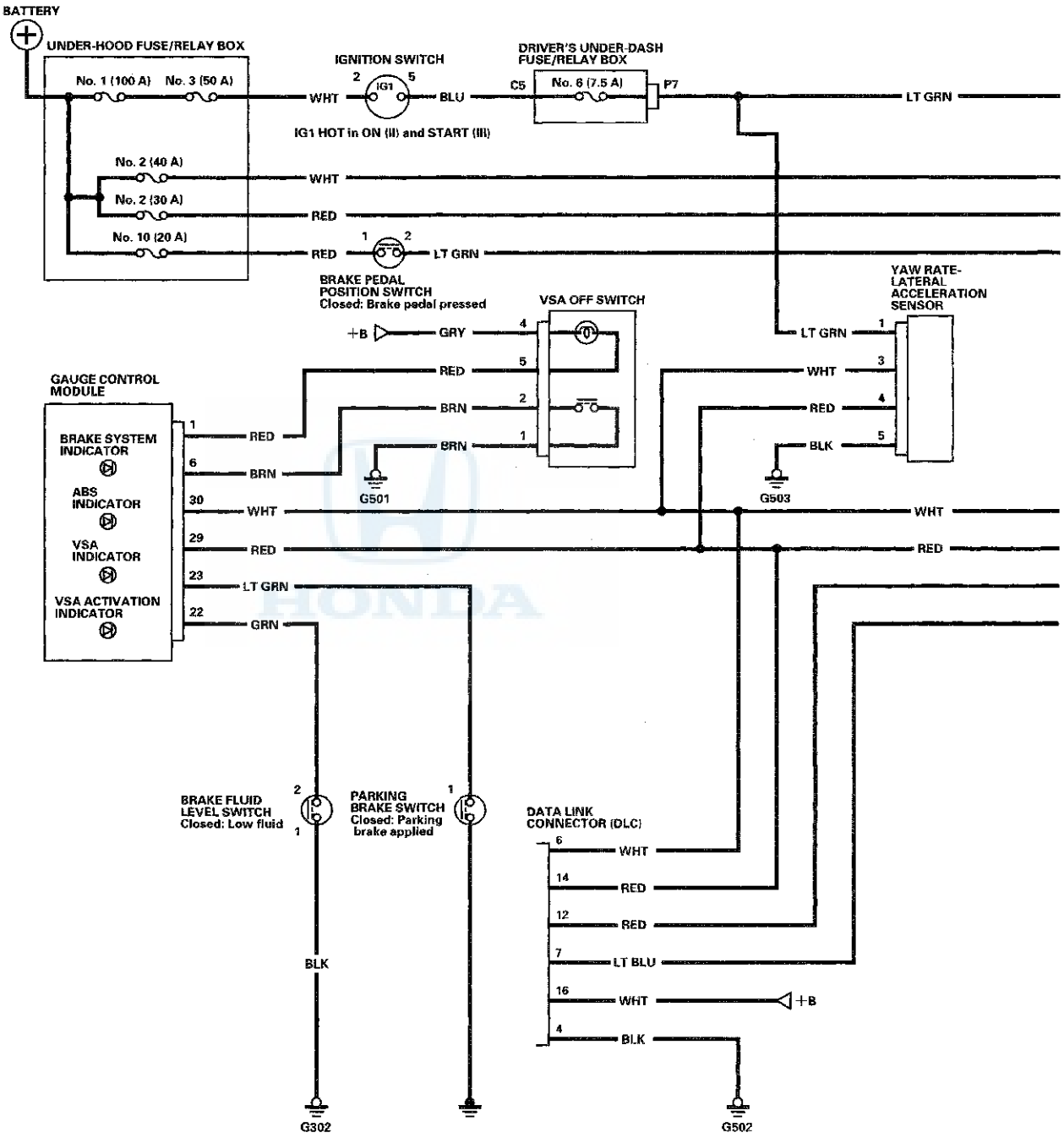

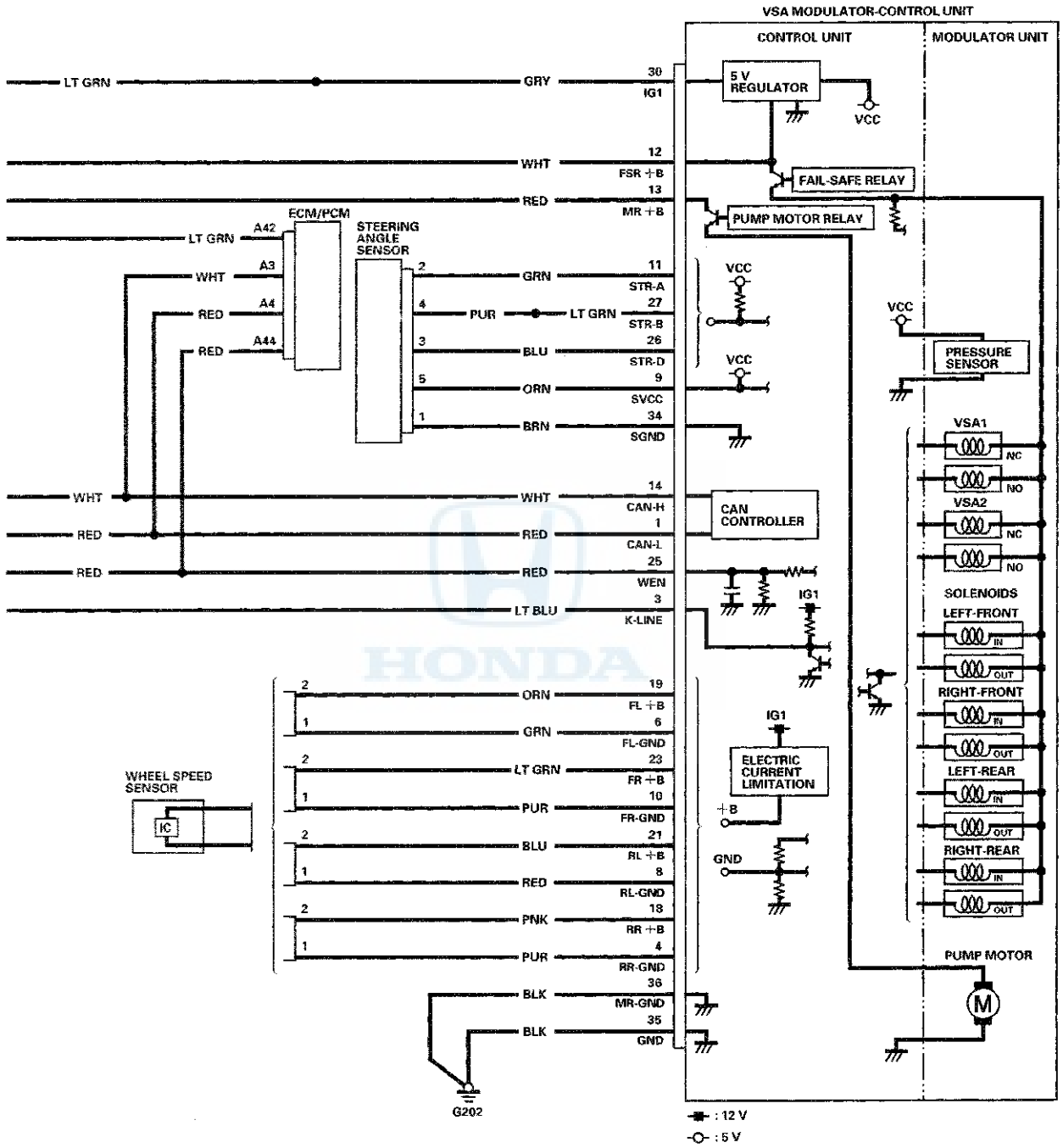
VSA MODULATOR-CONTROL UNIT
CONTROL UNIT
MODULATOR UNIT
LT GRN
GRY
30
IG1
5 V REGULATOR
VCC
WHT
12
FSR +B
FAIL-SAFE RELAY
RED
13
MR +B
PUMP MOTOR RELAY
ECM/PCM
A42
A3
A4
A44
STEERING ANGLE SENSOR
GRN
11
STR-A
PUR
27
STR-B
BLU
26
STR-D
ORN
9
SVCC
BRN
34
SGND
PRESSURE SENSOR
VSA1
NC
NO
VSA2
CAN-H
14
CAN-L
1
CAN CONTROLLER
WEN
25
K-LINE
3
LT BLU
SOLENOIDS
LEFT-FRONT
RIGHT-FRONT
LEFT-REAR
RIGHT-REAR
IN
OUT
FL +B
19
FL-GND
6
FR +B
23
FR-GND
10
RL +B
21
RL-GND
8
RR +B
18
RR-GND
4
MR-GND
36
GND
35
WHEEL SPEED SENSOR
IC
ELECTRIC CURRENT LIMITATION
+B
GND
PUMP MOTOR
M
G202
: 12 V
: 5 V

(cont'd)

Circuit Diagram (cont'd)

DRIVER'S UNDER-DASH FUSE/RELAY BOX CONNECTOR P (20P)

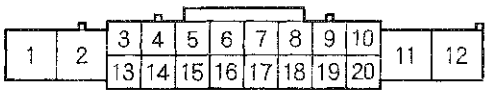

BRAKE PEDAL POSITION SWITCH 4P CONNECTOR

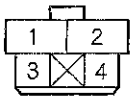

GAUGE CONTROL MODULE 32P CONNECTOR

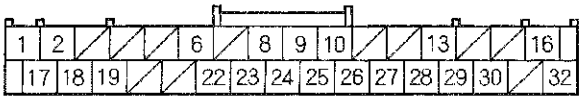

VSA OFF SWITCH 5P CONNECTOR

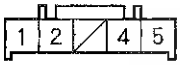

YAW RATE-LATERAL ACCELERATION SENSOR 5P CONNECTOR

BRAKE FLUID LEVEL SWITCH 2P CONNECTOR

PARKING BRAKE SWITCH 1P CONNECTOR

STEERING ANGLE SENSOR 5P CONNECTOR

WHEEL SPEED SENSOR 2P CONNECTOR

VSA MODULATOR-CONTROL UNIT 36P CONNECTOR

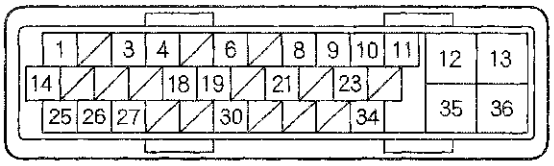

Wire side of female terminals

ECM/PCM CONNECTOR A (49P)

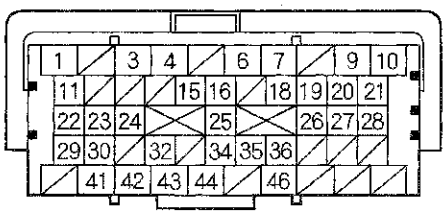

DATA LINK CONNECTOR (DLC)

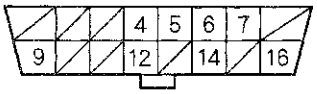

Terminal side of female terminals

DTC Troubleshooting

DTC 11-13: Right-front Wheel Speed Sensor Circuit Malfunction

DTC 13-13: Left-front Wheel Speed Sensor Circuit Malfunction

DTC 15-13: Right-rear Wheel Speed Sensor Circuit Malfunction

DTC 17-13: Left-rear Wheel Speed Sensor Circuit Malfunction

1. Turn the ignition switch to ON (II).
2. Clear the DTC with the HDS.
3. Turn the ignition switch to LOCK (0), then turn it to ON (II) again.
4. Check for DTCs with the HDS.

   Is DTC 11-13, 13-13, 15-13, and/or 17-13 indicated?

   YES—Go to step 5.

   NO—Intermittent failure, the system is OK at this time. Check for loose terminals between the wheel speed sensor 2P connector and the VSA modulator-control unit 36P connector. Refer to intermittent failures troubleshooting (see page 19-47). ■

5. Turn the ignition switch to LOCK (0).
6. Disconnect the VSA modulator-control unit 36P connector (see step 3 on page 19-142).
7. Disconnect the appropriate wheel speed sensor 2P connector.
8. Check for continuity between the appropriate VSA modulator-control unit 36P connector wheel speed sensor +B and GND terminals (see table).

DTC	VSA Modulator-control Unit 36P Connector Terminal	
11-13	No. 23	No. 10
13-13	No. 19	No. 6
15-13	No. 18	No. 4
17-13	No. 21	No. 8

VSA MODULATOR-CONTROL UNIT 36P CONNECTOR

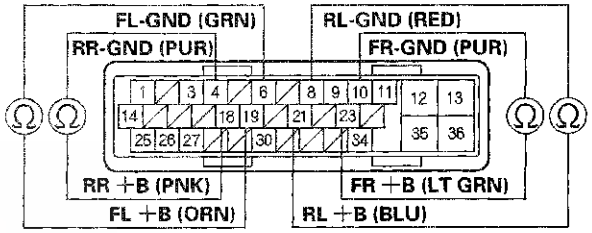

Wire side of female terminals

Is there continuity?

YES—Repair short in the wires between the appropriate wheel speed sensor and the VSA modulator-control unit. ■

NO—Go to step 9.

(cont'd)

DTC Troubleshooting (cont'd)

9. Check for continuity between the appropriate VSA modulator-control unit 36P connector terminal and the wheel speed sensor 2P connector terminal (see table).

DTC	VSA Modulator-control Unit 36P Connector Terminal	Appropriate Wheel Speed Sensor 2P Connector Terminal
11-13	No. 23	Right-front
13-13	No. 19	Left-front
15-13	No. 18	Right-rear
17-13	No. 21	Left-rear

WHEEL SPEED SENSOR 2P CONNECTOR
Terminal side of female terminals

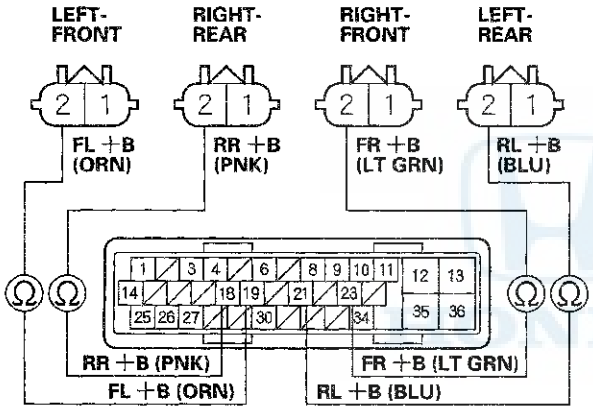

VSA MODULATOR-CONTROL UNIT 36P CONNECTOR
Wire side of female terminals

Is there continuity?

YES—Go to step 10.

NO—Repair open in the wire between the appropriate wheel speed sensor and the VSA modulator-control unit.■

10. Check for continuity between the appropriate VSA modulator-control unit 36P connector terminal and the wheel speed sensor 2P connector terminal (see table).

DTC	VSA Modulator-control Unit 36P Connector Terminal	Appropriate Wheel Speed Sensor 2P Connector Terminal
11-13	No. 10	Right-front
13-13	No. 6	Left-front
15-13	No. 4	Right-rear
17-13	No. 8	Left-rear

WHEEL SPEED SENSOR 2P CONNECTOR
Terminal side of female terminals

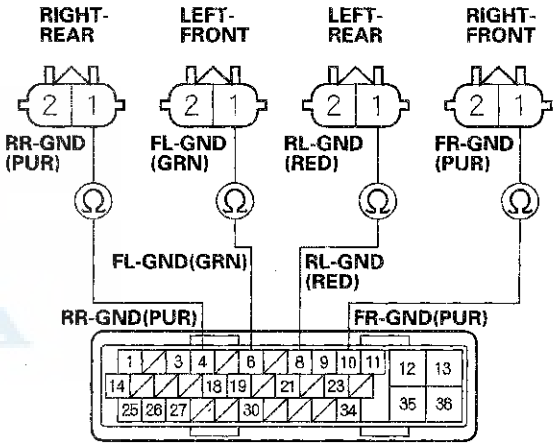

VSA MODULATOR-CONTROL UNIT 36P CONNECTOR
Wire side of female terminals

Is there continuity?

YES—Go to step 11.

NO—Repair open in the wire between the appropriate wheel speed sensor and the VSA modulator-control unit.■

11. Check for continuity between body ground and the appropriate VSA modulator-control unit 36P connector terminal (see table).

DTC	VSA Modulator-control Unit 36P Connector Terminal	
11-13	No. 23	No. 10
13-13	No. 19	No. 6
15-13	No. 18	No. 4
17-13	No. 21	No. 8

VSA MODULATOR-CONTROL UNIT 36P CONNECTOR

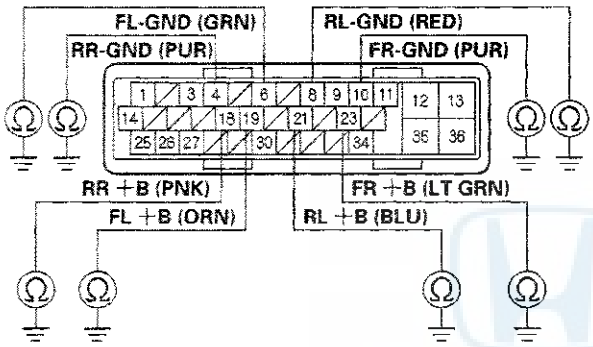

Wire side of female terminals

Is there continuity?

YES—Repair short to body ground in the wire between the appropriate wheel speed sensor and the VSA modulator-control unit.■

NO—Go to step 12.

12. Turn the ignition switch to ON (II).

13. Measure the voltage between body ground and the appropriate VSA modulator-control unit 36P connector terminal (see table).

DTC	VSA Modulator-control Unit 36P Connector Terminal	
11-13	No. 23	No. 10
13-13	No. 19	No. 6
15-13	No. 18	No. 4
17-13	No. 21	No. 8

VSA MODULATOR-CONTROL UNIT 36P CONNECTOR

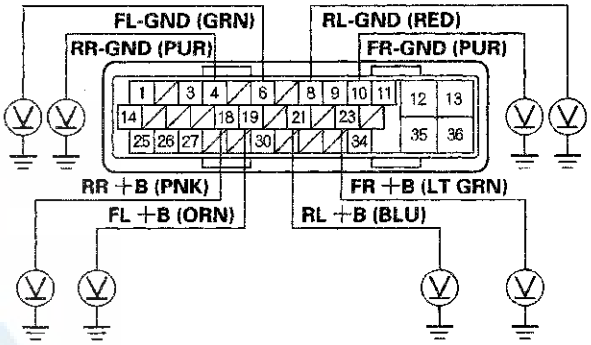

Wire side of female terminals

Is there 0.1 V or more?

YES—Repair short to power in the wire between the appropriate wheel speed sensor and the VSA modulator-control unit.■

NO—Go to step 14.

(cont'd)

DTC Troubleshooting (cont'd)

14. Turn the ignition switch to LOCK (0).

15. Substitute the appropriate wheel speed sensor with opposite wheel speed sensor, or with a known-good wheel speed sensor.

16. Reconnect all connectors.

17. Turn the ignition switch to ON (II).

18. Clear the DTC with the HDS.

19. Turn the ignition switch to LOCK (0), then turn it to ON (II) again.

20. Check for DTCs with the HDS.

    Is DTC indicated that is indicated in step 4?

    YES—Go to step 21.

    NO—Replace the original wheel speed sensor (see page 19-144).■

21. Update the VSA modulator-control unit if it does not have the latest software (see page 19-140). If the unit already has the latest softwear, substitute a known-good VSA modulator-control unit (see page 19-141).

22. Turn the ignition switch to LOCK (0), then turn it to ON (II) again.

23. Check for DTCs with the HDS.

    Is DTC 11-13, 13-13, 15-13, and/or 17-13 indicated?

    YES—Check for loose terminals in the VSA modulator-control unit 36P connector. If the VSA modulator-control unit was updated, substitute a known-good VSA modulator-control unit (see page 19-141), then retest. If the VSA modulator-control unit was substituted, go to step 1.

    NO—If the VSA modulator-control unit was updated, troubleshooting is complete. If the VSA modulator-control unit was substituted, replace the original VSA modulator-control unit (see page 19-141). If any other DTCs are indicated, go to the indicated DTCs troubleshooting.■

DTC 11-14: Right-front Wheel Speed Sensor Power Source Malfunction

DTC 13-14: Left-front Wheel Speed Sensor Power Source Malfunction

DTC 15-14: Right-rear Wheel Speed Sensor Power Source Malfunction

DTC 17-14: Left-rear Wheel Speed Sensor Power Source Malfunction

1. Turn the ignition switch to ON (II).
2. Clear the DTC with the HDS.
3. Turn the ignition switch to LOCK (0), then turn it to ON (II) again.
4. Check for DTCs with the HDS.

   Is DTC 11-14, 13-14, 15-14, and/or 17-14 indicated?

   YES—Go to step 5.

   NO—Intermittent failure, the system is OK at this time. Check for loose terminals between the wheel speed sensor 2P connector and the VSA modulator-control unit 36P connector. Refer to intermittent failures troubleshooting (see page 19-47).■

5. Update the VSA modulator-control unit if it does not have the latest software (see page 19-140). If the unit already has the latest software, substitute a known-good VSA modulator-control unit (see page 19-141).
6. Turn the ignition switch to ON (II).
7. Check for DTCs with the HDS.

   Is DTC 11-14, 13-14, 15-14, and/or 17-14 indicated?

   YES—Check for loose terminals in the VSA modulator-control unit 36P connector. If the VSA modulator-control unit was updated, substitute a known-good VSA modulator-control unit (see page 19-141), then retest. If the VSA modulator-control unit was substituted, go to step 1.

   NO—If the VSA modulator-control unit was updated, troubleshooting is complete. If the VSA modulator-control unit was substituted, replace the original VSA modulator-control unit (see page 19-141). If any other DTCs are indicated, go to the indicated DTCs troubleshooting.■

DTC Troubleshooting (cont'd)

DTC 12-11: Right-front Wheel Speed Sensor Electrical Noise or Intermittent Interruption

DTC 14-11: Left-front Wheel Speed Sensor Electrical Noise or Intermittent Interruption

DTC 16-11: Right-rear Wheel Speed Sensor Electrical Noise or Intermittent Interruption

DTC 18-11: Left-rear Wheel Speed Sensor Electrical Noise or Intermittent Interruption

NOTE: These DTCs may be caused by electrical interference. Check for aftermarket devices installed in the vehicle when these DTC are indicated.

1. Turn the ignition switch to ON (II).
2. Clear the DTC with the HDS.
3. Test-drive the vehicle.

   NOTE: Drive the vehicle on the road, not on a lift.
4. Check for DTCs with the HDS.

   Is DTC 12-11, 14-11, 16-11, and/or 18-11 indicated?

   YES—If DTC 12-12, 14-12, 16-12, or 18-12 is indicated at the same time, do the DTC 12-12, 14-12, 16-12, or 18-12 troubleshooting first (see page 19-73). If DTC 12-12, 14-12, 16-12, or 18-12 is not indicated, go to step 5.

   NO—If any other DTCs are indicated, go to the indicated DTCs troubleshooting. If DTCs are not indicated, there is an intermittent failure, the system is OK at this time. Check for loose terminals between the wheel speed sensor 2P connector and the VSA modulator-control unit 36P connector. Refer to intermittent failures troubleshooting (see page 19-47). ■
5. Turn the ignition switch to LOCK (0).
6. Check that the appropriate wheel speed sensor is properly mounted (see page 19-144).

DTC	Appropriate Wheel Speed Sensor
12-11	Right-front
14-11	Left-front
16-11	Right-rear
18-11	Left-rear

   Is the wheel speed sensor installation OK?

   YES—Go to step 7.

   NO—Reinstall the wheel speed sensor, and check the mounting position (see page 19-144). ■
7. Update the VSA modulator-control unit if it does not have the latest software (see page 19-140). If the unit already has the latest software, substitute a known-good VSA modulator-control unit (see page 19-141).
8. Test-drive the vehicle.

   NOTE: Drive the vehicle on the road, not on a lift.
9. Check for DTCs with the HDS.

   Is DTC 12-11, 14-11, 16-11, and/or 18-11 indicated?

   YES—Check for loose terminals in the VSA modulator-control unit 36P connector. If the VSA modulator-control unit was updated, substitute a known-good VSA modulator-control unit (see page 19-141), then retest. If the VSA modulator-control unit was substituted, go to step 1.

   NO—If the VSA modulator-control unit was updated, troubleshooting is complete. If the VSA modulator-control unit was substituted, replace the original VSA modulator-control unit (see page 19-141). If any other DTCs are indicated, go to the indicated DTCs troubleshooting. ■

DTC 12-12: Right-front Wheel Speed Sensor Short to the Other Sensor Circuit

DTC 14-12: Left-front Wheel Speed Sensor Short to the Other Sensor Circuit

DTC 16-12: Right-rear Wheel Speed Sensor Short to the Other Sensor Circuit

DTC 18-12: Left-rear Wheel Speed Sensor Short to the Other Sensor Circuit

1. Turn the ignition switch to ON (II).
2. Clear the DTC with the HDS.
3. Test-drive the vehicle. Drive the vehicle at 13 mph (20 km/h) or more, and go a distance of 328 ft (100 m) or more.

   NOTE: Drive the vehicle on the road, not on a lift.
4. Check for DTCs with the HDS.

   Is DTC 12-12, 14-12, 16-12, and/or 18-12 indicated?

   YES—Go to step 5.

   NO—Intermittent failure, the system is OK at this time. Check for loose terminals between the wheel speed sensor 2P connector and the VSA modulator-control unit 36P connector. Refer to intermittent failures troubleshooting (see page 19-47). ■
5. Turn the ignition switch to LOCK (0).
6. Disconnect the VSA modulator-control unit 36P connector (see step 3 on page 19-142).
7. Check for continuity between the appropriate VSA modulator-control unit 36P connector wheel speed sensor GND terminals (see table).

DTC	VSA Modulator-control Unit 36P Connector Terminal			
	Appropriate Terminal	Other Terminals		
12-12	No. 10	No. 6	No. 4	No. 8
14-12	No. 6	No. 10	No. 4	No. 8
16-12	No. 4	No. 10	No. 6	No. 8
18-12	No. 8	No. 10	No. 6	No. 4

VSA MODULATOR-CONTROL UNIT 36P CONNECTOR

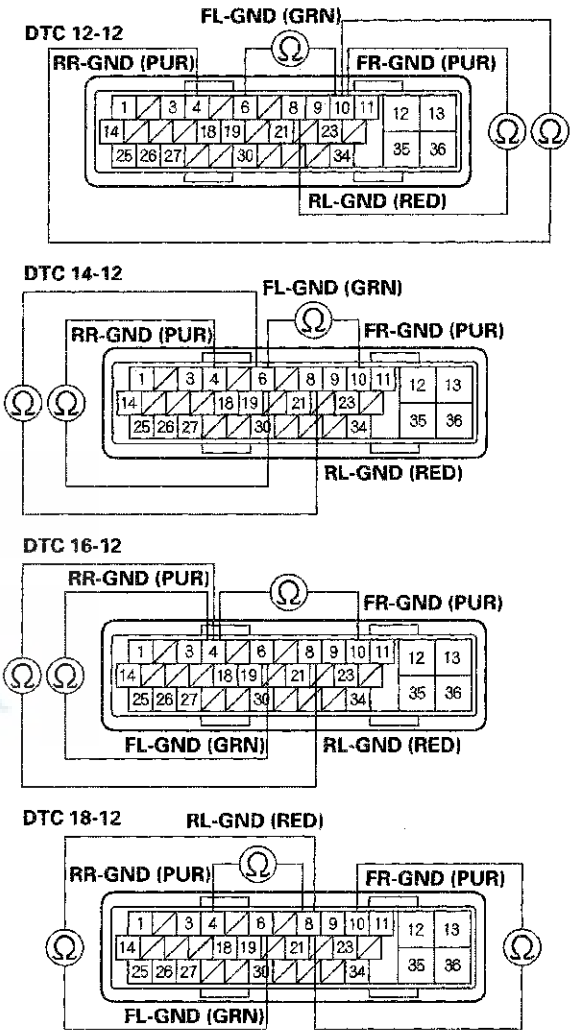

Wire side of female terminals

Is there continuity?

YES—Repair short in the wires between the appropriate wheel speed sensor and the VSA modulator-control unit. ■

NO—Go to step 8.

(cont'd)

DTC Troubleshooting (cont'd)

8. Reconnect the VSA modulator-control unit 36P connector.

9. Update the VSA modulator-control unit if it does not have the latest software (see page 19-140). If the unit already has the latest software, substitute a known-good VSA modulator-control unit (see page 19-141).

10. Test-drive the vehicle. Drive the vehicle at 13 mph (20 km/h) or more, and go a distance of 328 ft (100 m) or more.

    NOTE: Drive the vehicle on the road, not on a lift.

11. Check for DTCs with the HDS.

    Is DTC 12-12, 14-12, 16-12, and/or 18-12 indicated?

    YES—Check for loose terminals in the VSA modulator-control unit 36P connector. If the VSA modulator-control unit was updated, substitute a known-good VSA modulator-control unit (see page 19-141), then retest. If the VSA modulator-control unit was substituted, go to step 1.

    NO—If the VSA modulator-control unit was updated, troubleshooting is complete. If the VSA modulator-control unit was substituted, replace the original VSA modulator-control unit (see page 19-141). If any other DTCs are indicated, go to the indicated DTCs troubleshooting.■

DTC 12-21: Right-front Wheel Speed Sensor Installation Error

DTC 14-21: Left-front Wheel Speed Sensor Installation Error

DTC 16-21: Right-rear Wheel Speed Sensor Installation Error

DTC 18-21: Left-rear Wheel Speed Sensor Installation Error

1. Test-drive the vehicle. Drive the vehicle at 7 mph (10 km/h) or more.

   NOTE: Drive the vehicle on the road, not on a lift.

2. Check the RF, LF, RR, LR WHEEL SPEED in the VSA DATA LIST with the HDS.

   Are all four values the same?

   YES—Intermittent failure, the system is OK at this time. Check for loose terminals between the wheel speed sensor 2P connector and the VSA modulator-control unit 36P connector. Refer to intermittent failures troubleshooting (see page 19-47).■

   NO—Go to step 3.

3. Turn the ignition switch to LOCK (0).

4. Check that the appropriate wheel speed sensor is properly mounted (see page 19-144).

DTC	Appropriate Wheel Speed Sensor
12-21	Right-front
14-21	Left-front
16-21	Right-rear
18-21	Left-rear

Is the wheel speed sensor installation OK?

YES—Replace the appropriate wheel speed sensor (see page 19-144).■

NO—Reinstall the wheel speed sensor, and check the mounting position (see page 19-144).■

DTC 12-22: Right-front Wheel Speed Sensor Installation Error (19 mph (30 km/h) or More)

DTC 14-22: Left-front Wheel Speed Sensor Installation Error (19 mph (30 km/h) or More)

DTC 16-22: Right-rear Wheel Speed Sensor Installation Error (19 mph (30 km/h) or More)

DTC 18-22: Left-rear Wheel Speed Sensor Installation Error (19 mph (30 km/h) or More)

1. Test-drive the vehicle. Drive the vehicle between 19 mph (30 km/h) and 31 mph (50 km/h) for 70 seconds or more.

   NOTE: Drive the vehicle on the road, not on a lift.

2. Check the RF, LF, RR, LR WHEEL SPEED in the VSA DATA LIST with the HDS.

   Are all four values the same?

   YES—Intermittent failure, the system is OK at this time. Check for loose terminals between the wheel speed sensor 2P connector and the VSA modulator-control unit 36P connector. Refer to intermittent failures troubleshooting (see page 19-47).■

   NO—Go to step 3.

3. Turn the ignition switch to LOCK (0).

4. Check that the appropriate wheel speed sensor is properly mounted (see page 19-144).

DTC	Appropriate Wheel Speed Sensor
12-22	Right-front
14-22	Left-front
16-22	Right-rear
18-22	Left-rear

Is the wheel speed sensor installation OK?

YES—Replace the appropriate wheel speed sensor (see page 19-144).■

NO—Reinstall the wheel speed sensor, and check the mounting position (see page 19-144).■

DTC Troubleshooting (cont'd)

DTC 12-23: Right-front Wheel Speed Sensor Installation Error (0 to 9 mph (0 to 15 km/h))

DTC 14-23: Left-front Wheel Speed Sensor Installation Error (0 to 9 mph (0 to 15 km/h))

DTC 16-23: Right-rear Wheel Speed Sensor Installation Error (0 to 9 mph (0 to 15 km/h))

DTC 18-23: Left-rear Wheel Speed Sensor Installation Error (0 to 9 mph (0 to 15 km/h))

1. Test-drive the vehicle. Drive the vehicle between 1 mph (1 km/h) and 9 mph (15 km/h).

   NOTE: Drive the vehicle on the road, not on a lift.

2. Check the RF, LF, RR, LR WHEEL SPEED in the VSA DATA LIST with the HDS.

   Are all four values the same?

   YES—Intermittent failure, the system is OK at this time. Check for loose terminals between the wheel speed sensor 2P connector and the VSA modulator-control unit 36P connector. Refer to intermittent failures troubleshooting (see page 19-47). ■

   NO—Go to step 3.

3. Turn the ignition switch to LOCK (0).

4. Check that the appropriate wheel speed sensor is properly mounted (see page 19-144).

DTC	Appropriate Wheel Speed Sensor
12-23	Right-front
14-23	Left-front
16-23	Right-rear
18-23	Left-rear

Is the wheel speed sensor installation OK?

YES—Replace the appropriate wheel speed sensor (see page 19-144). ■

NO—Reinstall the wheel speed sensor, and check the mounting position (see page 19-144). ■

DTC 21-11: Right-front Magnetic Encoder Malfunction (Pulse Missing)

DTC 22-11: Left-front Magnetic Encoder Malfunction (Pulse Missing)

DTC 23-11: Right-rear Magnetic Encoder Malfunction (Pulse Missing)

DTC 24-11: Left-rear Magnetic Encoder Malfunction (Pulse Missing)

1. Turn the ignition switch to ON (II).

2. Clear the DTC with the HDS.

3. Test-drive the vehicle. Drive the vehicle at 13 mph (20 km/h) or more, and go a distance of 328 ft (100 m) or more.

   NOTE: Drive the vehicle on the road, not on a lift.

4. Check for DTCs with the HDS.

   Is DTC 21-11, 22-11, 23-11, and/or 24-11 indicated?

   YES—Go to step 5.

   NO—Intermittent failure, the system is OK at this time. Check for loose terminals between the wheel speed sensor 2P connector and the VSA modulator-control unit 36P connector. Refer to intermittent failures troubleshooting (see page 19-47).■

5. Turn the ignition switch to LOCK (0).

6. Inspect the appropriate magnetic encoder for damage, debris, and correct installation.

DTC	Appropriate Magnetic Encoder	Note
21-11	Right-front	Remove the driveshaft outboard joint from the appropriate wheel hub (see page 18-14).
22-11	Left-front	
23-11	Right-rear	Remove the hub bearing unit (see page 18-39).
24-11	Left-rear	

Is the magnetic encoder surface OK?

YES—Remove the debris from the magnetic encoder, or replace the wheel bearing (front) or the hub bearing unit (rear):■

- Front: Replace the front wheel bearing (see page 18-14).
- Rear: Replace the rear hub bearing unit (see page 18-39).

NO—Clean off dust or dirt from the appropriate magnetic encoder surface on the wheel bearing or the hub bearing unit, then go to step 1 and recheck. If the DTC is still present, replace the appropriate wheel bearing or hub bearing unit.

DTC Troubleshooting (cont'd)

DTC 25-12: Yaw Rate Sensor Internal Circuit Malfunction (Open, Short)

DTC 25-13: Yaw Rate Sensor Internal Circuit Malfunction

DTC 25-21: Yaw Rate Sensor Neutral Position Malfunction

1. Turn the ignition switch to ON (II).
2. Clear the DTC with the HDS.
3. Do the VSA sensor neutral position memorization (see page 19-138).
4. Turn the ignition switch to LOCK (0), then turn it to ON (II) again.
5. Check for DTCs with the HDS.

   Is DTC 25-12, 25-13, or 25-21 indicated?

   YES—Replace the yaw rate-lateral acceleration sensor (see page 19-138).■

   NO—Intermittent failure, the system is OK at this time.■

DTC 25-17: Yaw Rate-Lateral Acceleration Sensor Power Source Voltage Malfunction

DTC 25-18: Yaw Rate-Lateral Acceleration Sensor Internal Circuit Malfunction

1. Turn the ignition switch to ON (II).
2. Clear the DTC with the HDS.
3. Do the VSA sensor neutral position memorization (see page 19-138).
4. Turn the ignition switch to LOCK (0), then turn it to ON (II) again.
5. Check for DTCs with the HDS.

   Is DTC 25-17 or 25-18 indicated?

   YES—If DTC 61-01, 61-21, 61-22, 61-23, and/or 62-21 is indicated at the same time, check the battery performance (see page 22-88), and do the alternator and regulator circuit troubleshooting first (see page 4-27). If DTC 61-01, 61-21, 61-22, 61-23, and/or 62-21 is not indicated at the same time, replace the yaw rate-lateral acceleration sensor (see page 19-138).■

   NO—Intermittent failure, the system is OK at this time.■

DTC 25-22: Yaw Rate Sensor Stuck

1. Turn the ignition switch to ON (II).
2. Clear the DTC with the HDS.
3. Do the VSA sensor neutral position memorization (see page 19-138).
4. Test-drive the vehicle. Drive the vehicle at 7 mph (10 km/h) or more.

   NOTE: Drive the vehicle on the road, not on a lift.
5. Check for DTCs with the HDS.

   Is DTC 25-22 indicated?

   YES—Go to step 6.

   NO—If any other DTCs are indicated, go to the indicated DTCs troubleshooting. If DTCs are not indicated, intermittent failure, the system is OK at this time. ■
6. Check the LATERAL ACCELERATION SENSOR and YAW RATE S in the VSA DATA LIST with the HDS.

   Is 0 °/s indicated?

   YES—Go to step 7.

   NO—Replace the yaw rate-lateral acceleration sensor (see page 19-138). ■
7. Test-drive the vehicle. Check the YAW RATE S in the VSA DATA LIST with the HDS while driving in corners.

   Does the indicated value change?

   YES—Intermittent failure, the system is OK at this time. ■

   NO—Replace the yaw rate-lateral acceleration sensor (see page 19-138). ■

DTC 25-23: Yaw Rate Sensor Circuit Intermittent Interruption

1. Turn the ignition switch to ON (II).
2. Clear the DTC with the HDS.
3. Do the VSA sensor neutral position memorization (see page 19-138).
4. Turn the ignition switch to LOCK (0), then turn it to ON (II) again.
5. Wait 10 seconds or more.
6. Check for DTCs with the HDS.

   Is DTC 25-23 indicated?

   YES—Replace the yaw rate-lateral acceleration sensor (see page 19-138). ■

   NO—Intermittent failure, the system is OK at this time. ■

DTC Troubleshooting (cont'd)

DTC 25-24: Yaw Rate Sensor Gain Low

DTC 25-25: Yaw Rate Sensor Gain High

DTC 26-24: Lateral Acceleration Sensor Gain Low

DTC 26-25: Lateral Acceleration Sensor Gain High

1. Turn the ignition switch to ON (II).
2. Clear the DTC with the HDS.
3. Do the VSA sensor neutral position memorization (see page 19-138).
4. Test-drive the vehicle. Drive the vehicle at 10 mph (15 km/h) or more.

   NOTE: Drive the vehicle on the road, not on a lift.
5. Check for DTCs with the HDS.

   Is DTC 25-24, 25-25, 26-24, or 26-25 indicated?

   YES—Replace the yaw rate-lateral acceleration sensor (see page 19-138).■

   NO—Intermittent failure, the system is OK at this time.■

DTC 26-12: Lateral Acceleration Sensor Internal Circuit Malfunction (Open, Short)

DTC 26-13: Lateral Acceleration Sensor Internal Circuit Malfunction

DTC 26-21: Lateral Acceleration Sensor Neutral Position Malfunction

DTC 26-23: Lateral Acceleration Sensor Circuit Intermittent Interruption

NOTE: While doing this troubleshooting, avoid vibration or shaking of the vehicle.

1. Turn the ignition switch to ON (II).
2. Clear the DTC with the HDS.
3. Do the VSA sensor neutral position memorization (see page 19-138).
4. Turn the ignition switch to LOCK (0), then turn it to ON (II) again.
5. Wait 15 seconds or more.
6. Check for DTCs with the HDS.

   Is DTC 26-12, 26-13, 26-21, or 26-23 indicated?

   YES—Replace the yaw rate-lateral acceleration sensor (see page 19-138).■

   NO—Intermittent failure, the system is OK at this time.■

DTC 26-22: Lateral Acceleration Sensor Stuck

1. Turn the ignition switch to ON (II).

2. Clear the DTC with the HDS.

3. Do the VSA sensor neutral position memorization (see page 19-138).

4. Test-drive the vehicle. Drive the vehicle at 7 mph (10 km/h) or more.

   NOTE: Drive the vehicle on the road, not on a lift.

5. Check for DTCs with the HDS.

   Is DTC 26-22 indicated?

   YES—Go to step 6.

   NO—If any other DTCs are indicated, go to the indicated DTCs troubleshooting. If DTCs are not indicated, intermittent failure, the system is OK at this time.■

6. Check the LATERAL ACCELERATION SENSOR and YAW RATE S in the VSA DATA LIST with the HDS.

   Is 0 °/s indicated?

   YES—Go to step 7.

   NO—Replace the yaw rate-lateral acceleration sensor (see page 19-138).■

7. Test-drive the vehicle. Check the YAW RATE S in the VSA DATA LIST with the HDS while driving in corners.

   Does the indicated value change?

   YES—Intermittent failure, the system is OK at this time.■

   NO—Replace the yaw rate-lateral acceleration sensor (see page 19-138).■

DTC Troubleshooting (cont'd)

DTC 27-11: Steering Angle Sensor DIAG Signal Error (Initial)

DTC 27-26: Steering Angle Sensor DIAG Signal Error (Main)

1. Turn the ignition switch to ON (II).
2. Clear the DTC with the HDS.
3. Turn the ignition switch to LOCK (0), then turn it to ON (II) again.
4. Check for DTCs with the HDS.

   Is DTC 27-11 or 27-26 indicated?

   YES—Go to step 5.

   NO—Intermittent failure, the system is OK at this time. Check for loose terminals between the steering angle sensor 5P connector and the VSA modulator-control unit 36P connector. Refer to intermittent failures troubleshooting (see page 19-47).■

5. Turn the ignition switch to LOCK (0).
6. Disconnect the steering angle sensor 5P connector (see page 19-137).
7. Disconnect the VSA modulator-control unit 36P connector (see step 3 on page 19-142).
8. Check for continuity between body ground and steering angle sensor 5P connector terminals No. 2, No. 3, No. 4, and No. 5 individually.

STEERING ANGLE SENSOR 5P CONNECTOR

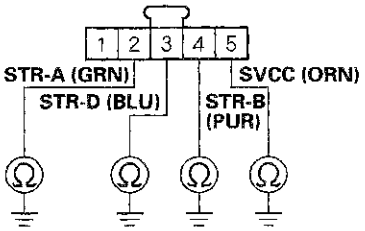

Wire side of female terminals

Is there continuity?

YES—Repair short to body ground in the wire between the steering angle sensor and the VSA modulator-control unit.■

NO—Go to step 9.

9. Check for continuity between the VSA modulator-control unit 36P connector terminal and the steering angle sensor 5P connector terminal individually (see table).

Sign	VSA Modulator-control Unit 36P Connector Terminal	Steering Angle Sensor 5P Connector Terminal
SVCC	No. 9	No. 5
STR-A	No. 11	No. 2
STR-D	No. 26	No. 3
STR-B	No. 27	No. 4
SGND	No. 34	No. 1

STEERING ANGLE SENSOR 5P CONNECTOR
Wire side of female terminals

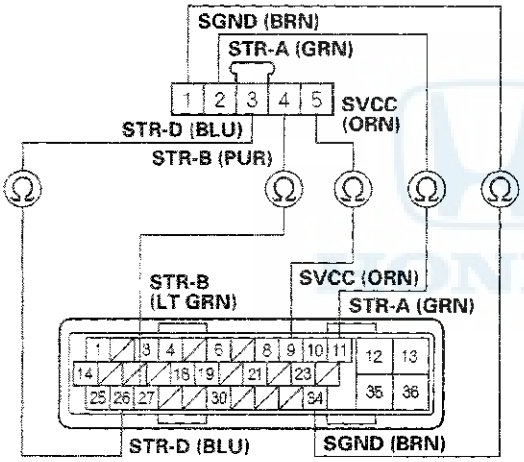

VSA MODULATOR-CONTROL UNIT 36P CONNECTOR
Wire side of female terminals

Is there continuity?

YES—Go to step 10.

NO—Repair open in the wire between the steering angle sensor and the VSA modulator-control unit. ■

10. Substitute a known-good steering angle sensor (see page 19-137).

11. Reconnect all connectors.

12. Turn the ignition switch to ON (II).

13. Clear the DTC with the HDS.

14. Turn the ignition switch to LOCK (0), then turn it to ON (II) again.

15. Check for DTCs with the HDS.

Is DTC 27-11 or 27-26 indicated?

YES—Go to step 16.

NO—Replace the original steering angle sensor (see page 19-137). ■

16. Update the VSA modulator-control unit if it does not have the latest software (see page 19-140). If the unit already has the latest software, substitute a known-good VSA modulator-control unit (see page 19-141).

17. Turn the ignition switch to LOCK (0), then turn it to ON (II) again.

18. Check for DTCs with the HDS.

Is DTC 27-11 or 27-26 indicated?

YES—Check for loose terminals in the VSA modulator-control unit 36P connector. If the VSA modulator-control unit was updated, substitute a known-good VSA modulator-control unit (see page 19-141), then retest. If the VSA modulator-control unit was substituted, go to step 1.

NO—If the VSA modulator-control unit was updated, troubleshooting is complete. If the VSA modulator-control unit was substituted, replace the original VSA modulator-control unit (see page 19-141). If any other DTCs are indicated, go to the indicated DTCs troubleshooting. ■

DTC Troubleshooting (cont'd)

DTC 27-21: Steering Angle Sensor Stuck Neutral Position

DTC 27-22: Steering Angle Sensor Stuck Offset Position

1. Turn the ignition switch to ON (II).

2. Turn the steering wheel left and right 90 degrees or more. Check the STEERING ANGLE in the VSA DATA LIST with the HDS.

   Is there +90 ° or more, and −90 ° or less?

   YES—Intermittent failure, the system is OK at this time. Check for loose terminals between the steering angle sensor 5P connector and the VSA modulator-control unit 36P connector. Refer to intermittent failures troubleshooting (see page 19-47).■

   NO—Go to step 3.

3. Turn the ignition switch to LOCK (0).

4. Disconnect the steering angle sensor 5P connector (see page 19-137).

5. Disconnect the VSA modulator-control unit 36P connector (see step 3 on page 19-142).

6. Turn the ignition switch to ON (II).

7. Measure the voltage between body ground and steering angle sensor 5P connector terminals No. 2, No. 3, and No. 4 individually.

STEERING ANGLE SENSOR 5P CONNECTOR

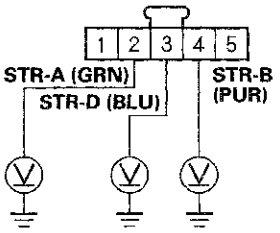

Wire side of female terminals

Is there 0.1 V or more?

YES—Repair short to power in the wire between the steering angle sensor and the VSA modulator-control unit.■

NO—Replace the steering angle sensor (see page 19-137).■

DTC 27-23: Steering Angle Sensor Counter Malfunction

1. Turn the ignition switch to ON (II).
2. Clear the DTC with the HDS.
3. Turn the ignition switch to LOCK (0).
4. Start the engine.
5. Turn the steering wheel from lock-to-lock several times.
6. Check for DTCs with the HDS.

   Is DTC 27-23 indicated?

   YES—Go to step 7.

   NO—Intermittent failure, the system is OK at this time. Check for loose terminals between the steering angle sensor 5P connector and the VSA modulator-control unit 36P connector. Refer to intermittent failures troubleshooting (see page 19-47). ■

7. Turn the ignition switch to LOCK (0).
8. Disconnect the steering angle sensor 5P connector (see page 19-137).
9. Disconnect the VSA modulator-control unit 36P connector (see step 3 on page 19-142).
10. Check for continuity between steering angle sensor 5P connector terminals No. 2 and No. 4.

STEERING ANGLE SENSOR 5P CONNECTOR

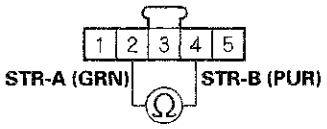

Wire side of female terminals

Is there continuity?

YES—Repair short in the wires between the steering angle sensor and the VSA modulator-control unit. ■

NO—Go to step 11.

11. Check for continuity between steering angle sensor 5P connector terminals No. 5 and No. 2, and No. 5 and No. 4 individually.

STEERING ANGLE SENSOR 5P CONNECTOR

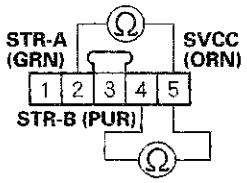

Wire side of female terminals

Is there continuity?

YES—Repair short in the wires between the steering angle sensor and the VSA modulator-control unit. ■

NO—Go to step 12.

(cont'd)

DTC Troubleshooting (cont'd)

12. Check for continuity between steering angle sensor 5P connector terminals No. 1 and No. 2, and No. 1 and No. 4 individually.

STEERING ANGLE SENSOR 5P CONNECTOR

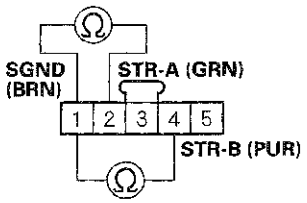

Wire side of female terminals

Is there continuity?

YES—Repair short in the wires between the steering angle sensor and the VSA modulator-control unit. ■

NO—Replace the steering angle sensor (see page 19-137). ■

DTC 27-24: Steering Angle Sensor Exchange Malfunction

1. Turn the ignition switch to ON (II), and set the front wheels to the straight ahead position.

2. Turn the steering wheel one turn to the left. Check the STEERING ANGLE in the VSA DATA LIST with the HDS.

Is there about 288 degrees to 432 degrees positive?

YES—Intermittent failure, the system is OK at this time. ■

NO—Replace the steering angle sensor (see page 19-137). ■

DTC 31-xx*: ABS Right-front Inlet Solenoid Valve Malfunction

DTC 32-xx*: ABS Right-front Outlet Solenoid Valve Malfunction

DTC 33-xx*: ABS Left-front Inlet Solenoid Valve Malfunction

DTC 34-xx*: ABS Left-front Outlet Solenoid Valve Malfunction

DTC 35-xx*: ABS Right-rear Inlet Solenoid Valve Malfunction

DTC 36-xx*: ABS Right-rear Outlet Solenoid Valve Malfunction

DTC 37-xx*: ABS Left-rear Inlet Solenoid Valve Malfunction

DTC 38-xx*: ABS Left-rear Outlet Solenoid Valve Malfunction

*: Any two-character subcode (see table)

Subcode	Malfunction	Note (DTC)
01	Solenoid Initial Pulse	31-01, 32-01, 33-01, 34-01, 35-01, 36-01, 37-01, 38-01
02	Initial Feedback Signal	31-02, 33-02, 35-02, 37-02
11	Feedback Signal	31-11, 33-11, 35-11, 37-11
21	Solenoid Pulse	31-21, 32-21, 33-21, 34-21, 35-21, 36-21, 37-21, 38-21
22	Solenoid Speculative	31-22, 32-22, 33-22, 34-22, 35-22, 36-22, 37-22, 38-22
23	Solenoid Stuck ON	31-23, 32-23, 33-23, 34-23, 35-23, 36-23, 37-23, 38-23
24	Feedback Signal/ Solenoid Stuck ON	31-24, 33-24, 35-24, 37-24

1. Turn the ignition switch to ON (II).
2. Clear the DTC with the HDS.
3. Turn the ignition switch to LOCK (0), then turn it to ON (II) again.
4. Check for DTCs with the HDS.

   Is DTC 31-xx, 32-xx, 33-xx, 34-xx, 35-xx, 36-xx, 37-xx, or 38-xx indicated?

   YES—Go to step 5.

   NO—Intermittent failure, the system is OK at this time. ■

(cont'd)

DTC Troubleshooting (cont'd)

5. Update the VSA modulator-control unit if it does not have the latest software (see page 19-140). If the unit already has the latest software, substitute a known-good VSA modulator-control unit (see page 19-141).

6. Turn the ignition switch to LOCK (0), then turn it to ON (II) again.

7. Check for DTCs with the HDS.

   Is DTC 31-xx, 32-xx, 33-xx, 34-xx, 35-xx, 36-xx, 37-xx, or 38-xx indicated?

   YES—Check for loose terminals in the VSA modulator-control unit 36P connector. If the VSA modulator-control unit was updated, substitute a known-good VSA modulator-control unit (see page 19-141), then retest. If the VSA modulator-control unit was substituted, go to step 1.

   NO—If the VSA modulator-control unit was updated, troubleshooting is complete. If the VSA modulator-control unit was substituted, replace the original VSA modulator-control unit (see page 19-141). If any other DTCs are indicated, go to the indicated DTCs troubleshooting. ■

DTC 41-21: Right-front Wheel Lock

DTC 42-21: Left-front Wheel Lock

DTC 43-21: Right-rear Wheel Lock

DTC 44-21: Left-rear Wheel Lock

The DTCs may be indicated under these conditions:

- The vehicle goes into a spin.
- The ABS or VSA continues to operate for a long time.
- Snow, dirt, or debris build-up on the wheel speed sensor or magnetic encoder.
- Misadjusted brake pedal position switch.
- Contaminated brake fluid.

1. Raise the vehicle, and support it with safety stands in the proper locations (see page 1-11).

2. Turn the appropriate wheel by hand.

DTC	Appropriate Wheel
41-21	Right-front
42-21	Left-front
43-21	Right-rear
44-21	Left-rear

   Is there brake drag?

   YES—Repair the brake drag. ■

   NO—Go to step 3.

3. Check that the appropriate wheel speed sensor is properly mounted (see page 19-144).

   Is the wheel speed sensor installation OK?

   YES—Go to step 4.

   NO—Reinstall the wheel speed sensor, and check the mounting position (see page 19-144). ■

4. Turn the ignition switch to ON (II).

5. Clear the DTC with the HDS.

6. Test-drive the vehicle. Drive the vehicle at 7 mph (10 km/h) for 20 seconds or more.

   NOTE: Drive the vehicle on the road, not on a lift.

7. Check for DTCs with the HDS.

   Is DTC 41-21, 42-21, 43-21, and/or 44-21 indicated?

   YES—Go to step 8.

   NO—If any other DTCs are indicated, go to the indicated DTCs troubleshooting. If DTCs are not indicated, intermittent failure, the system is OK at this time. ■

8. Update the VSA modulator-control unit if it does not have the latest software (see page 19-140). If the unit already has the latest software, substitute a known-good VSA modulator-control unit (see page 19-141).

9. Test-drive the vehicle. Drive the vehicle at 7 mph (10 km/h) for 20 seconds or more.

   NOTE: Drive the vehicle on the road, not on a lift.

10. Check for DTCs with the HDS.

    Is DTC 41-21, 42-21, 43-21, and/or 44-21 indicated?

    YES—Check for loose terminals in the VSA modulator-control unit 36P connector. If the VSA modulator-control unit was updated, substitute a known-good VSA modulator-control unit (see page 19-141), then retest. If the VSA modulator-control unit was substituted, go to step 1.

    NO—If the VSA modulator-control unit was updated, troubleshooting is complete. If the VSA modulator-control unit was substituted, replace the original VSA modulator-control unit (see page 19-141). If any other DTCs are indicated, go to the indicated DTCs troubleshooting. ■

DTC Troubleshooting (cont'd)

DTC 51-11: Motor Lock

DTC 51-13: Motor Drive Circuit Malfunction

1. Turn the ignition switch to ON (II).
2. Clear the DTC with the HDS.
3. Turn the ignition switch to LOCK (0), then turn it to ON (II) again.
4. Wait 5 seconds.
5. Operate any one of the four solenoids, as listed, in the VSA FUNCTION TEST five times with the HDS.

-LFT FT SOLENOID
-RT FT SOLENOID
-LFT REAR SOLENOID
-RT REAR SOLENOID

6. Check for DTCs with the HDS.

   Is DTC 51-11 or 51-13 indicated?

   YES—Go to step 7.

   NO—Intermittent failure, the system is OK at this time.■

7. Update the VSA modulator-control unit if it does not have the latest software (see page 19-140). If the unit already has the latest software, substitute a known-good VSA modulator-control unit (see page 19-141).
8. Turn the ignition switch to LOCK (0), then turn it to ON (II) again.
9. Wait 5 seconds.
10. Operate any one of the four solenoids, as listed, in the VSA FUNCTION TEST five times with the HDS.

-LFT FT SOLENOID
-RT FT SOLENOID
-LFT REAR SOLENOID
-RT REAR SOLENOID

11. Check for DTCs with the HDS.

    Is DTC 51-11 or 51-13 indicated?

    YES—Check for loose terminals in the VSA modulator-control unit 36P connector. If the VSA modulator-control unit was updated, substitute a known-good VSA modulator-control unit (see page 19-141), then retest. If the VSA modulator-control unit was substituted, go to step 1.

    NO—If the VSA modulator-control unit was updated, troubleshooting is complete. If the VSA modulator-control unit was substituted, replace the original VSA modulator-control unit (see page 19-141). If any other DTCs are indicated, go to the indicated DTCs troubleshooting.■

DTC 51-12: Motor Drive Circuit Malfunction

1. Turn the ignition switch to ON (II).
2. Clear the DTC with the HDS.
3. Turn the ignition switch to LOCK (0), then turn it to ON (II) again.
4. Check for DTCs with the HDS.

   Is DTC 51-12 indicated?

   YES—Go to step 5.

   NO—Intermittent failure, the system is OK at this time. Check for loose terminals at the VSA modulator-control unit 36P connector. Refer to intermittent failures troubleshooting (see page 19-47).■

5. Turn the ignition switch to LOCK (0).
6. Check the No. 2 (30 A) fuse in the under-hood fuse/relay box.

   Is the fuse blown?

   YES—Go to step 7.

   NO—Reinstall the checked fuse, then go to step 14.

7. Disconnect the VSA modulator-control unit 36P connector (see step 3 on page 19-142).
8. Check for continuity between VSA modulator-control unit 36P connector terminal No. 13 and body ground.

VSA MODULATOR-CONTROL UNIT 36P CONNECTOR

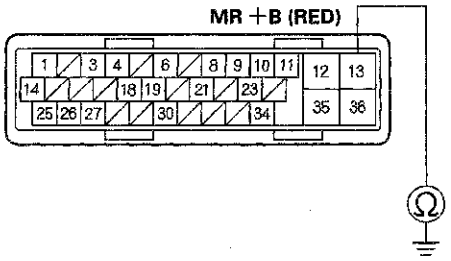

Wire side of female terminals

   Is there continuity?

   YES—Repair short to body ground in the wire between the No. 2 (30 A) fuse in the under-hood fuse/relay box and the VSA modulator-control unit.■

   NO—Install a new No. 2 (30 A) fuse in the under-hood fuse/relay box, then go to step 9.

9. Reconnect the VSA modulator-control unit 36P connector.
10. Turn the ignition switch to ON (II).
11. Clear the DTC with the HDS.
12. Turn the ignition switch to LOCK (0), then turn it to ON (II) again.
13. Check for DTCs with the HDS.

    Is DTC 51-12 indicated?

    YES—Replace the VSA modulator-control unit (see page 19-141).

    NO—The troubleshooting is complete.■

(cont'd)

DTC Troubleshooting (cont'd)

14. Disconnect the VSA modulator-control unit 36P connector (see step 3 on page 19-142).

15. Measure the voltage between VSA modulator-control unit 36P connector terminal No. 13 and body ground.

VSA MODULATOR-CONTROL UNIT 36P CONNECTOR

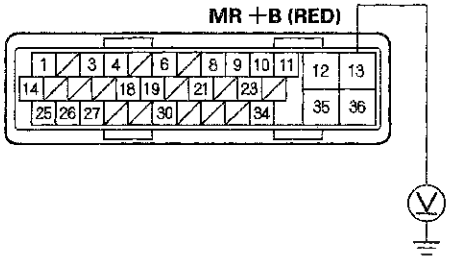

Wire side of female terminals

Is there battery voltage?

YES—Go to step 16.

NO—Repair open in the wire between the No. 2 (30 A) fuse in the under-hood fuse/relay box and the VSA modulator-control unit.■

16. Reconnect the VSA modulator-control unit 36P connector.

17. Update the VSA modulator-control unit if it does not have the latest software (see page 19-140). If the unit already has the latest software, substitute a known-good VSA modulator-control unit (see page 19-141).

18. Turn the ignition switch to LOCK (0), then turn it to ON (II) again.

19. Check for DTCs with the HDS.

Is DTC 51-12 indicated?

YES—Check for loose terminals in the VSA modulator-control unit 36P connector. If the VSA modulator-control unit was updated, substitute a known-good VSA modulator-control unit (see page 19-141), then retest. If the VSA modulator-control unit was substituted, go to step 1.

NO—If the VSA modulator-control unit was updated, troubleshooting is complete. If the VSA modulator-control unit was substituted, replace the original VSA modulator-control unit (see page 19-141). If any other DTCs are indicated, go to the indicated DTCs troubleshooting.■

DTC 52-12: Motor Stuck OFF

1. Turn the ignition switch to ON (II).

2. Clear the DTC with the HDS.

3. Turn the ignition switch to LOCK (0), then turn it to ON (II) again.

4. Operate any one of the four solenoids, as listed, in the VSA FUNCTION TEST five times with the HDS.

-LFT FT SOLENOID
-RT FT SOLENOID
-LFT REAR SOLENOID
-RT REAR SOLENOID

5. Check for DTCs with the HDS.

   Is DTC 52-12 indicated?

   YES—Go to step 6.

   NO—Intermittent failure, the system is OK at this time. ■

6. Update the VSA modulator-control unit if it does not have the latest software (see page 19-140). If the unit already has the latest software, substitute a known-good VSA modulator-control unit (see page 19-141).

7. Turn the ignition switch to LOCK (0), then turn it to ON (II) again.

8. Operate any one of the four solenoids, as listed, in the VSA FUNCTION TEST five times with the HDS.

-LFT FT SOLENOID
-RT FT SOLENOID
-LFT REAR SOLENOID
-RT REAR SOLENOID

9. Check for DTCs with the HDS.

   Is DTC 52-12 indicated?

   YES—Check for loose terminals in the VSA modulator-control unit 36P connector. If the VSA modulator-control unit was updated, substitute a known-good VSA modulator-control unit (see page 19-141), then retest. If the VSA modulator-control unit was substituted, go to step 1.

   NO—If the VSA modulator-control unit was updated, troubleshooting is complete. If the VSA modulator-control unit was substituted, replace the original VSA modulator-control unit (see page 19-141). If any other DTCs are indicated, go to the indicated DTCs troubleshooting. ■

DTC Troubleshooting (cont'd)

DTC 53-01: Motor Relay Stuck ON 1

DTC 53-12: Motor Relay Stuck ON 2

1. Turn the ignition switch to ON (II).
2. Clear the DTC with the HDS.
3. Turn the ignition switch to LOCK (0), then turn it to ON (II) again.
4. Check for DTCs with the HDS.

   Is DTC 53-01 or 53-12 indicated?

   YES—Go to step 5.

   NO—Intermittent failure, the system is OK at this time. Check for loose terminals at the VSA modulator-control unit 36P connector. Refer to intermittent failures troubleshooting (see page 19-47).■

5. Turn the ignition switch to LOCK (0).
6. Disconnect the VSA modulator-control unit 36P connector (see step 3 on page 19-142).
7. Check for continuity between VSA modulator-control unit 36P connector terminal No. 36 and body ground.

VSA MODULATOR-CONTROL UNIT 36P CONNECTOR

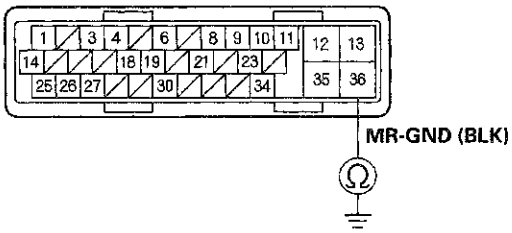

Wire side of female terminals

Is there continuity?

YES—Go to step 8.

NO—Repair open in the wire between the VSA modulator-control unit and body ground (G202).■

8. Reconnect the VSA modulator-control unit 36P connector.

9. Update the VSA modulator-control unit if it does not have the latest software (see page 19-140). If the unit already has the latest software, substitute a known-good VSA modulator-control unit (see page 19-141).

10. Turn the ignition switch to LOCK (0), then turn it to ON (II) again.

11. Check for DTCs with the HDS.

    Is DTC 53-01 or 53-12 indicated?

    YES—Check for loose terminals in the VSA modulator-control unit 36P connector. If the VSA modulator-control unit was updated, substitute a known-good VSA modulator-control unit (see page 19-141), then retest. If the VSA modulator-control unit was substituted, go to step 1.

    NO—If the VSA modulator-control unit was updated, troubleshooting is complete. If the VSA modulator-control unit was substituted, replace the original VSA modulator-control unit (see page 19-141). If any other DTCs are indicated, go to the indicated DTCs troubleshooting.■

DTC 54-03: Fail-safe Relay 1 Stuck ON

DTC 54-04: Fail-safe Relay 1 Stuck OFF (Initial)

DTC 54-21: Fail-safe Relay 1 Stuck OFF (Main)

1. Turn the ignition switch to ON (II).

2. Clear the DTC with the HDS.

3. Turn the ignition switch to LOCK (0), then turn it to ON (II) again.

4. Check for DTCs with the HDS.

   Is DTC 54-03, 54-04, or 54-21 indicated?

   YES—Go to step 5.

   NO—Intermittent failure, the system is OK at this time.■

5. Turn the ignition switch to LOCK (0).

6. Check the No. 2 (40 A) fuse in the under-hood fuse/relay box.

   Is the fuse blown?

   YES—Go to step 7.

   NO—Reinstall the checked fuse, then go to step 14.

7. Disconnect the VSA modulator-control unit 36P connector (see step 3 on page 19-142).

(cont'd)

DTC Troubleshooting (cont'd)

8. Check for continuity between VSA modulator-control unit 36P connector terminal No. 12 and body ground.

VSA MODULATOR-CONTROL UNIT 36P CONNECTOR

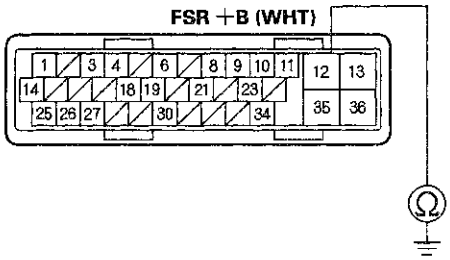

Wire side of female terminals

Is there continuity?

YES—Repair short to body ground in the wire between the No. 2 (40 A) fuse in the under-hood fuse/relay box and the VSA modulator-control unit.■

NO—Install a new No. 2 (40 A) fuse in the under-hood fuse/relay box, then go to step 9.

9. Reconnect the VSA modulator-control unit 36P connector.

10. Turn the ignition switch to ON (II).

11. Clear the DTC with the HDS.

12. Turn the ignition switch to LOCK (0), then turn it to ON (II) again.

13. Check for DTCs with the HDS.

Is DTC 54-03, 54-04, or 54-21 indicated?

YES—Replace the VSA modulator-control unit (see page 19-141).

NO—The troubleshooting is complete.■

14. Update the VSA modulator-control unit if it does not have the latest software (see page 19-140). If the unit already has the latest software, substitute a known-good VSA modulator-control unit (see page 19-141).

15. Turn the ignition switch to LOCK (0), then turn it to ON (II) again.

16. Check for DTCs with the HDS.

    Is DTC 54-03, 54-04, or 54-21 indicated?

    YES—Check for loose terminals in the VSA modulator-control unit 36P connector. If the VSA modulator-control unit was updated, substitute a known-good VSA modulator-control unit (see page 19-141), then retest. If the VSA modulator-control unit was substituted, go to step 1.

    NO—If the VSA modulator-control unit was updated, troubleshooting is complete. If the VSA modulator-control unit was substituted, replace the original VSA modulator-control unit (see page 19-141). If any other DTCs are indicated, go to the indicated DTCs troubleshooting. ■

DTC 56-01: Initial VIG FET Stuck OFF (Initial)

DTC 56-02: Initial VIG FET Stuck ON

DTC 56-11: VIG FET Stuck OFF (Main)

1. Turn the ignition switch to ON (II).

2. Clear the DTC with the HDS.

3. Turn the ignition switch to LOCK (0), then turn it to ON (II) again.

4. Check for DTCs with the HDS.

   Is DTC 56-01, 56-02, or 56-11 indicated?

   YES—Go to step 5.

   NO—Intermittent failure, the system is OK at this time. ■

5. Update the VSA modulator-control unit if it does not have the latest software (see page 19-140). If the unit already has the latest software, substitute a known-good VSA modulator-control unit (see page 19-141).

6. Turn the ignition switch to LOCK (0), then turn it to ON (II) again.

7. Check for DTCs with the HDS.

   Is DTC 56-01, 56-02, or 56-11 indicated?

   YES—Check for loose terminals in the VSA modulator-control unit 36P connector. If the VSA modulator-control unit was updated, substitute a known-good VSA modulator-control unit (see page 19-141), then retest. If the VSA modulator-control unit was substituted, go to step 1.

   NO—If the VSA modulator-control unit was updated, troubleshooting is complete. If the VSA modulator-control unit was substituted, replace the original VSA modulator-control unit (see page 19-141). If any other DTCs are indicated, go to the indicated DTCs troubleshooting. ■

DTC Troubleshooting (cont'd)

DTC 61-01: VSA Modulator-control Unit Initial IG Low Voltage

DTC 61-21: VSA Modulator-control Unit Power Source Low Voltage 1

DTC 61-22: VSA Modulator-control Unit Power Source Low Voltage 2

DTC 61-23: VSA Modulator-control Unit Power Source Low Voltage 3

1. Turn the ignition switch to ON (II).
2. Clear the DTC with the HDS.
3. Turn the ignition switch to LOCK (0), then start the engine.
4. Check for DTCs with the HDS.

   Is DTC 61-01, 61-21, 61-22, or 61-23 indicated?

   YES—Go to step 5.

   NO—Intermittent failure, the system is OK at this time. Check for loose terminals at the VSA modulator-control unit 36P connector. Refer to intermittent failures troubleshooting (see page 19-47).■
5. Check and note BATTERY voltage in the VSA DATA LIST with the HDS.
6. Using a voltmeter, measure and note the voltage between the battery terminals.

   NOTE: If the voltage is below 9.5 V, check the battery (see page 22-88), and troubleshoot the alternator regulator circuit (see page 4-27).
7. Compare the voltage noted in step 5 to the voltage in step 6.

   Is the difference between the two voltage readings less then 3 V?

   YES—Intermittent failure, the system is OK at this time. Check for loose terminals at the VSA modulator-control unit 36P connector. Refer to intermittent failures troubleshooting (see page 19-47). If the code resets after clearing, go to step 8.

   NO—Go to step 8.
8. Update the VSA modulator-control unit if it does not have the latest software (see page 19-140). If the unit already has the latest software, substitute a known-good VSA modulator-control unit (see page 19-141).
9. Turn the ignition switch to LOCK (0), then start the engine.
10. Check for DTCs with the HDS.

    Is DTC 61-01, 61-21, 61-22, or 61-23 indicated?

    YES—Check for loose terminals in the VSA modulator-control unit 36P connector. If the VSA modulator-control unit was updated, substitute a known-good VSA modulator-control unit (see page 19-141), then retest. If the VSA modulator-control unit was substituted, go to step 1.

    NO—If the VSA modulator-control unit was updated, troubleshooting is complete. If the VSA modulator-control unit was substituted, replace the original VSA modulator-control unit (see page 19-141). If any other DTCs are indicated, go to the indicated DTCs troubleshooting.■

DTC 62-21: VSA Modulator-control Unit IG High Voltage

1. Turn the ignition switch to ON (II).

2. Clear the DTC with the HDS.

3. Turn the ignition switch to LOCK (0), then start the engine.

4. Check for DTCs with the HDS.

   Is DTC 62-21 indicated?

   YES—Go to step 5.

   NO—Intermittent failure, the system is OK at this time. ■

5. Check and note BATTERY voltage in the VSA DATA LIST with the HDS.

6. Using a voltmeter, measure and note the voltage between the battery terminals.

   NOTE: If the voltage is beyond 15.1 V, troubleshoot the alternator regulator circuit (see page 4-27).

7. Compare the voltage noted in step 5 to the voltage in step 6.

   Is the difference between the two voltage readings less than 3 V?

   YES—Intermittent failure, the system is OK at this time. Check for loose terminals at the VSA modulator-control unit 36P connector. Refer to intermittent failures troubleshooting (see page 19-47). If the code resets after clearing, go to step 8. ■

   NO—Go to step 8.

8. Update the VSA modulator-control unit if it does not have the latest software (see page 19-140). If the unit already has the latest software, substitute a known-good VSA modulator-control unit (see page 19-141).

9. Turn the ignition switch to LOCK (0), then start the engine.

10. Check for DTCs with the HDS.

    Is DTC 62-21 indicated?

    YES—Check for loose terminals in the VSA modulator-control unit 36P connector. If the VSA modulator-control unit was updated, substitute a known-good VSA modulator-control unit (see page 19-141), then retest. If the VSA modulator-control unit was substituted, go to step 1.

    NO—If the VSA modulator-control unit was updated, troubleshooting is complete. If the VSA modulator-control unit was substituted, replace the original VSA modulator-control unit (see page 19-141). If any other DTCs are indicated, go to the indicated DTCs troubleshooting. ■

DTC Troubleshooting (cont'd)

DTC 64-11: Steering Angle Sensor Power Circuit Low Voltage

1. Turn the ignition switch to ON (II).
2. Clear the DTC with the HDS.
3. Turn the ignition switch to LOCK (0), then turn it to ON (II) again.
4. Check for DTCs with the HDS.

   Is DTC 64-11 indicated?

   YES—Go to step 5.

   NO—Intermittent failure, the system is OK at this time. ■

5. Turn the ignition switch to LOCK (0).
6. Disconnect the steering angle sensor 5P connector (see page 19-137).
7. Disconnect the VSA modulator-control unit 36P connector (see step 3 on page 19-142).
8. Check for continuity between steering angle sensor 5P connector terminal No. 5 and body ground.

STEERING ANGLE SENSOR 5P CONNECTOR

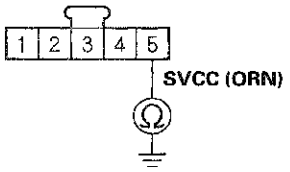

Wire side of female terminals

Is there continuity?

YES—Repair short to body ground in the wire between the steering angle sensor and the VSA modulator-control unit. ■

NO—Go to step 9.

9. Reconnect all connectors.
10. Update the VSA modulator-control unit if it does not have the latest software (see page 19-140). If the unit already has the latest software, substitute a known-good VSA modulator-control unit (see page 19-141).
11. Turn the ignition switch to LOCK (0), then turn it to ON (II) again.
12. Check for DTCs with the HDS.

    Is DTC 64-11 indicated?

    YES—Check for loose terminals in the VSA modulator-control unit 36P connector. If the VSA modulator-control unit was updated, substitute a known-good VSA modulator-control unit (see page 19-141), then retest. If the VSA modulator-control unit was substituted, go to step 1.

    NO—If the VSA modulator-control unit was updated, troubleshooting is complete. If the VSA modulator-control unit was substituted, replace the original VSA modulator-control unit (see page 19-141). If any other DTCs are indicated, go to the indicated DTCs troubleshooting. ■

DTC 64-12: Steering Angle Sensor Power Circuit High Voltage

1. Turn the ignition switch to ON (II).
2. Clear the DTC with the HDS.
3. Turn the ignition switch to LOCK (0), then turn it to ON (II) again.
4. Check for DTCs with the HDS.

   Is DTC 64-12 indicated?

   YES—Go to step 5.

   NO—Intermittent failure, the system is OK at this time. Check for loose terminals between the steering angle sensor 5P connector and the VSA modulator-control unit 36P connector. Refer to intermittent failures troubleshooting (see page 19-47).■

5. Turn the ignition switch to LOCK (0).
6. Disconnect the steering angle sensor 5P connector (see page 19-137).
7. Disconnect the VSA modulator-control unit 36P connector (see step 3 on page 19-142).
8. Turn the ignition switch to ON (II).
9. Measure the voltage between steering angle sensor 5P connector terminal No. 5 and body ground.

STEERING ANGLE SENSOR 5P CONNECTOR

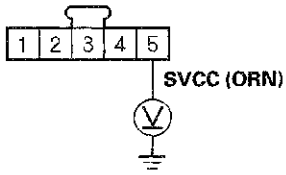

Wire side of female terminals

Is there 0.1 V or more?

YES—Repair short to power in the wire between the steering angle sensor and the VSA modulator-control unit.■

NO—Go to step 10.

(cont'd)

DTC Troubleshooting (cont'd)

10. Turn the ignition switch to LOCK (0).

11. Reconnect all connectors.

12. Update the VSA modulator-control unit if it does not have the latest software (see page 19-140). If the unit already has the latest software, substitute a known-good VSA modulator-control unit (see page 19-141).

13. Turn the ignition switch to LOCK (0), then turn it to ON (II) again.

14. Check for DTCs with the HDS.

    Is DTC 64-12 indicated?

    YES—Check for loose terminals in the VSA modulator-control unit 36P connector. If the VSA modulator-control unit was updated, substitute a known-good VSA modulator-control unit (see page 19-141), then retest. If the VSA modulator-control unit was substituted, go to step 1.

    NO—If the VSA modulator-control unit was updated, troubleshooting is complete. If the VSA modulator-control unit was substituted, replace the original VSA modulator-control unit (see page 19-141). If any other DTCs are indicated, go to the indicated DTCs troubleshooting. ■

DTC 65-21: Brake Fluid Level Stuck ON

NOTE: Bleeding the brake system while the ignition switch is ON can cause this DTC.

1. Check the brake fluid level in the master cylinder reservoir.

   Is the brake fluid level OK?

   YES—Go to step 2.

   NO—Do the brake pad inspection: Front (see page 19-12), rear (see page 19-29), check for brake fluid leaks or replace worn brake pads, then go to step 2 and recheck.

2. Turn the ignition switch to ON (II).

3. Clear the DTC with the HDS.

4. Turn the ignition switch to LOCK (0), then turn it to ON (II) again.

5. Check for DTCs with the HDS.

   Is DTC 65-21 indicated?

   YES—Go to step 6.

   NO—Intermittent failure, the system is OK at this time. ■

6. Release the parking brake.

7. Turn the ignition switch to LOCK (0), then turn it to ON (II) again.

8. Check the brake system indicator in the gauge control module.

   Does the indicator come on then go off?

   YES—Go to step 13.

   NO—Go to step 9.

9. Check the BRAKE FLUID LEVEL SWITCH in the VSA DATA LIST with the HDS.

   Does the HDS indicate the BRAKE FLUID LEVEL SWITCH as OFF?

   YES—Substitute a known-good gauge control module, then go to step 1 and recheck. If no DTCs are indicated, replace the original gauge control module (see page 22-324).

   NO—Go to step 10.

10. Disconnect the brake fluid level switch 2P connector, then check the BRAKE FLUID LEVEL SWITCH in the VSA DATA LIST.

    Does the HDS indicate OFF?

    YES— Replace the brake master cylinder (the brake fluid level switch is included) (see page 19-25).

    NO—Go to step 11.

11. Disconnect the gauge control module 32P connector.

12. Check for continuity between brake fluid level switch 2P connector terminal No. 2 and body ground.

BRAKE FLUID LEVEL SWITCH 2P CONNECTOR

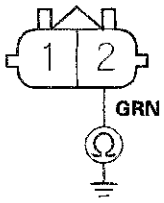

Wire side of female terminals

Is there continuity?

YES—Repair short to body ground in the wire between the gauge control module and the brake fluid level switch. ■

NO—Substitute a known-good gauge control module, then go to step 1 and recheck. If no DTCs are indicated, replace the original gauge control module (see page 22-324).

(cont'd)

DTC Troubleshooting (cont'd)

13. Update the VSA modulator-control unit if it does not have the latest software (see page 19-140). If the unit already has the latest software, substitute a known-good VSA modulator-control unit (see page 19-141).

14. Turn the ignition switch to LOCK (0), then turn it to ON (II) again.

15. Check for DTCs with the HDS.

    Is DTC 65-21 indicated?

    YES—Check for loose terminals in the VSA modulator-control unit 36P connector. If the VSA modulator-control unit was updated, substitute a known-good VSA modulator-control unit (see page 19-141), then retest. If the VSA modulator-control unit was substituted, go to step 2.

    NO—If the VSA modulator-control unit was updated, troubleshooting is complete. If the VSA modulator-control unit was substituted, replace the original VSA modulator-control unit (see page 19-141). If any other DTCs are indicated, go to the indicated DTCs troubleshooting.■

DTC 66-11: Pressure Sensor (Inside of VSA Modulator-control Unit) Malfunction

DTC 66-14: Pressure Sensor (Inside of VSA Modulator-control Unit) Malfunction

DTC 66-16: Pressure Sensor (Inside of VSA Modulator-control Unit) Malfunction

DTC 66-17: Pressure Sensor (Inside of VSA Modulator-control Unit) Malfunction

DTC 66-18: Pressure Sensor (Inside of VSA Modulator-control Unit) Malfunction

DTC 66-19: Pressure Sensor (Inside of VSA Modulator-control Unit) Malfunction

1. Turn the ignition switch to ON (II).

2. Clear the DTC with the HDS.

3. Turn the ignition switch to LOCK (0), then turn it to ON (II) again.

4. Check for DTCs with the HDS.

   Is DTC 66-11, 66-14, 66-16, 66-17, 66-18, or 66-19 indicated?

   YES—Go to step 5.

   NO—Intermittent failure, the system is OK at this time.■

5. Update the VSA modulator-control unit if it does not have the latest software (see page 19-140). If the unit already has the latest software, substitute a known-good VSA modulator-control unit (see page 19-141).

6. Turn the ignition switch to LOCK (0), then start the engine.

7. Check for DTCs with the HDS.

   Is DTC 66-11, 66-14, 66-16, 66-17, 66-18, or 66-19 indicated?

   YES—Check for loose terminals in the VSA modulator-control unit 36P connector. If the VSA modulator-control unit was updated, substitute a known-good VSA modulator-control unit (see page 19-141), then retest. If the VSA modulator-control unit was substituted, go to step 1.

   NO—If the VSA modulator-control unit was updated, troubleshooting is complete. If the VSA modulator-control unit was substituted, replace the original VSA modulator-control unit (see page 19-141). If any other DTCs are indicated, go to the indicated DTCs troubleshooting. ■

DTC 66-12: Pressure Sensor (Inside of VSA Modulator-control Unit) Malfunction

1. Turn the ignition switch to ON (II).

2. Clear the DTC with the HDS.

3. Turn the ignition switch to LOCK (0), then turn it to ON (II) again.

4. Check for DTCs with the HDS.

   Is DTC 66-12 indicated?

   YES—Go to step 5.

   NO—Intermittent failure, the system is OK at this time. ■

5. Turn the ignition switch to LOCK (0).

6. Disconnect the steering angle sensor 5P connector (see page 19-137).

7. Disconnect the VSA modulator-control unit 36P connector (see step 3 on page 19-142).

(cont'd)

DTC Troubleshooting (cont'd)

8. Check for continuity between steering angle sensor 5P connector terminal No. 5 and body ground.

STEERING ANGLE SENSOR 5P CONNECTOR

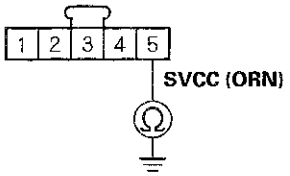

Wire side of female terminals

Is there continuity?

YES—Repair short to body ground in the wire between the steering angle sensor and the VSA modulator-control unit. ■

NO—Go to step 9.

9. Turn the ignition switch to ON (II).

10. Measure the voltage between steering angle sensor 5P connector terminal No. 5 and body ground.

STEERING ANGLE SENSOR 5P CONNECTOR

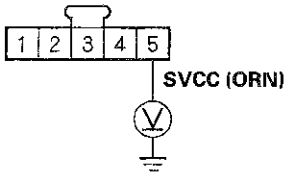

Wire side of female terminals

Is there 0.1 V or more?

YES—Repair short to power in the wire between the steering angle sensor and the VSA modulator-control unit. ■

NO—Go to step 11.

11. Turn the ignition switch to LOCK (0).

12. Check for continuity between VSA modulator-control unit 36P connector terminal No. 9 and steering angle sensor 5P connector terminal No. 5.

STEERING ANGLE SENSOR 5P CONNECTOR
Wire side of female terminals

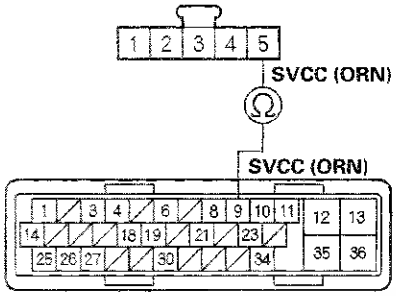

VSA MODULATOR-CONTROL UNIT 36P CONNECTOR
Wire side of female terminals

Is there continuity?

YES—Go to step 13.

NO—Repair open in the wire between the steering angle sensor and the VSA modulator-control unit. ■

13. Reconnect all connectors.

14. Update the VSA modulator-control unit if it does not have the latest software (see page 19-140). If the unit already has the latest software, substitute a known-good VSA modulator-control unit (see page 19-141).

15. Turn the ignition switch to LOCK (0), then turn it to ON (II) again.

16. Check for DTCs with the HDS.

Is DTC 66-12 indicated?

YES—Check for loose terminals in the VSA modulator-control unit 36P connector. If the VSA modulator-control unit was updated, substitute a known-good VSA modulator-control unit (see page 19-141), then retest. If the VSA modulator-control unit was substituted, go to step 1.

NO—If the VSA modulator-control unit was updated, troubleshooting is complete. If the VSA modulator-control unit was substituted, replace the original VSA modulator-control unit (see page 19-141). If any other DTCs are indicated, go to the indicated DTCs troubleshooting. ■

DTC Troubleshooting (cont'd)

DTC 66-15: Pressure Sensor (Inside of VSA Modulator-control Unit) Malfunction

NOTE: Brake fluid leaks from brake system can cause this DTC. Check for brake fluid leaks first.

1. Test-drive the vehicle.

   NOTE: Drive the vehicle on the road, not on a lift.

2. Turn the ignition switch to LOCK (0).

3. Raise the vehicle, and support it with safety stands in the proper locations (see page 1-11).

4. Turn all four wheels by hand.

   Is there brake drag?

   YES—Repair the brake drag.■

   NO—Go to step 5.

5. Turn the ignition switch to ON (II).

6. Check the BRAKE PRESS in the VSA DATA LIST with the HDS while moving the brake pedal.

   Does the indicated value change?

   YES—Intermittent failure, the system is OK at this time.■

   NO—Go to step 7.

7. Update the VSA modulator-control unit if it does not have the latest software (see page 19-140). If the unit already has the latest software, substitute a known-good VSA modulator-control unit (see page 19-141).

8. Turn the ignition switch to LOCK (0), then turn it to ON (II) again.

9. Check for DTCs with the HDS.

   Is DTC 66-15 indicated?

   YES—Check for loose terminals in the VSA modulator-control unit 36P connector. If the VSA modulator-control unit was updated, substitute a known-good VSA modulator-control unit (see page 19-141), then retest. If the VSA modulator-control unit was substituted, go to step 1.

   NO—If the VSA modulator-control unit was updated, troubleshooting is complete. If the VSA modulator-control unit was substituted, replace the original VSA modulator-control unit (see page 19-141). If any other DTCs are indicated, go to the indicated DTCs troubleshooting.■

DTC 68-21: Brake Pedal Position Switch Stuck OFF

1. Start the engine.

2. Check the BRAKE PRESS in the VSA DATA LIST with the HDS. Do not press the brake pedal.

   Is there 10 MPa or less?

   YES—Go to step 3.

   NO—Check for brake drag or a misadjusted brake pedal position switch. If they are normal, go to step 25.

3. Check the BRAKE SWITCH in the VSA DATA LIST with the HDS while moving the brake pedal.

   Does it indicate ON when the pedal is pressed, and OFF when the pedal is released?

   YES—Intermittent failure, the system is OK at this time. Check for loose terminals between the brake pedal position switch 4P connector, ECM/PCM connector A (49P), and the VSA modulator-control unit 36P connector. Refer to intermittent failures troubleshooting (see page 19-47).■

   NO—Go to step 4.

4. Turn the ignition switch to LOCK (0).

5. Disconnect the brake pedal position switch 4P connector.

6. Connect the brake pedal position switch 4P connector terminals No. 1 and No. 2 with a jumper wire.

BRAKE PEDAL POSITION SWITCH 4P CONNECTOR

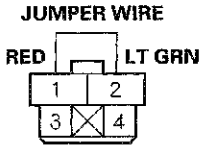

Wire side of female terminals

7. Turn the ignition switch to ON (II).

8. Check the BRAKE SWITCH in the VSA DATA LIST with the HDS.

   Does it indicate ON?

   YES—Check the brake pedal position switch adjustment (see page 19-6). If it is OK, replace the brake pedal position switch.■

   NO—Go to step 9.

9. Disconnect the jumper wire.

10. Turn the ignition switch to LOCK (0).

(cont'd)

DTC Troubleshooting (cont'd)

11. Check the No. 10 (20 A) fuse in the under-hood fuse/relay box.

    Is the fuse blown?

    YES—Go to step 12.

    NO—Reinstall the checked fuse, then go to step 21.

12. Check for continuity between brake pedal position switch 4P connector terminal No. 1 and body ground.

BRAKE PEDAL POSITION SWITCH 4P CONNECTOR

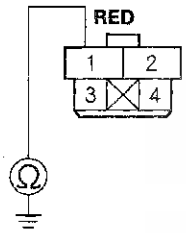

Wire side of female terminals

Is there continuity?

YES—Repair short to body ground in the wire between the No. 10 (20 A) fuse in the under-hood fuse/relay box and the brake pedal position switch.■

NO—Go to step 13.

13. Short the SCS line with the HDS.

14. Disconnect ECM/PCM connector A (49P).

15. Check for continuity between brake pedal position switch 4P connector terminal No. 2 and body ground.

BRAKE PEDAL POSITION SWITCH 4P CONNECTOR

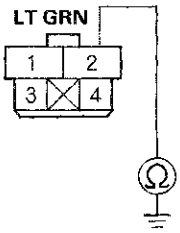

Wire side of female terminals

Is there continuity?

YES—Repair short to body ground in the wire between the brake pedal position switch and the ECM/PCM.■

NO—Install a new No. 10 (20 A) fuse in the under-hood fuse/relay box, then go to step 16.

16. Reconnect all connectors.

17. Update the ECM/PCM if it does not have the latest software (see page 11-215), or substitute a known-good ECM/PCM (see page 11-7).

18. Clear the DTC with the HDS.

19. Test-drive the vehicle. Drive the vehicle at 7 mph (10 km/h) or more.

    NOTE: Drive the vehicle on the road, not on a lift.

20. Check for DTCs with the HDS.

    Is DTC 68-21 indicated?

    YES—Check for loose terminals in the ECM/PCM connector A (49P). If the ECM/PCM was updated, substitute a known-good ECM/PCM (see page 11-7), then retest. If the ECM/PCM was substituted, go to step 1.

    NO—The troubleshooting is complete.■

21. Measure the voltage between brake pedal position switch 4P connector terminal No. 1 and body ground.

BRAKE PEDAL POSITION SWITCH 4P CONNECTOR

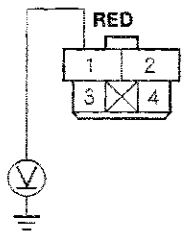

Wire side of female terminals

Is there battery voltage?

YES—Go to step 22.

NO—Repair open in the wire between the No. 10 (20 A) fuse in the under-hood fuse/relay box and the brake pedal position switch. ■

22. Short the SCS line with the HDS.

23. Disconnect ECM/PCM connector A (49P).

24. Check for continuity between brake pedal position switch 4P connector terminal No. 2 and ECM/PCM connector A (49P) terminal No. 42.

ECM/PCM CONNECTOR A (49P)
Terminal side of female terminals

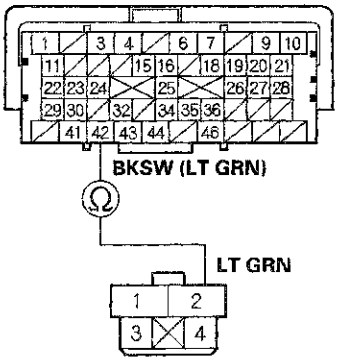

BRAKE PEDAL POSITION SWITCH 4P CONNECTOR
Wire side of female terminals

Is there continuity?

YES—Update the ECM/PCM if it does not have the latest software (see page 11-215), or substitute a known-good ECM/PCM (see page 11-7), then go to step 1 and recheck. If the ECM/PCM was updated and DTCs are not indicated, troubleshooting is complete. If the ECM/PCM was substituted and DTCs are not indicated, replace the original ECM/PCM (see page 11-216).

NO—Repair open in the wire between the ECM/PCM and the brake pedal position switch. ■

(cont'd)

DTC Troubleshooting (cont'd)

25. Update the VSA modulator-control unit if it does not have the latest software (see page 19-140). If the unit already has the latest software, substitute a known-good VSA modulator-control unit (see page 19-141).

26. Test-drive the vehicle. Drive the vehicle at 7 mph (10 km/h) or more.

    NOTE: Drive the vehicle on the road, not on a lift.

27. Check for DTCs with the HDS.

    Is DTC 68-21 indicated?

    YES—Check for loose terminals in the VSA modulator-control unit 36P connector. If the VSA modulator-control unit was updated, substitute a known-good VSA modulator-control unit (see page 19-141), then retest. If the VSA modulator-control unit was substituted, go to step 1.

    NO—If the VSA modulator-control unit was updated, troubleshooting is complete. If the VSA modulator-control unit was substituted, replace the original VSA modulator-control unit (see page 19-141). If any other DTCs are indicated, go to the indicated DTCs troubleshooting.■

DTC 68-22: Brake Pedal Position Switch Stuck ON

1. Turn the ignition switch to ON (II).

2. Check the BRAKE PRESS in the VSA DATA LIST with the HDS. Do not press the brake pedal.

   Is there 10 MPa or more?

   YES—Check the brake pedal height (see page 19-6). If the brake pedal height is OK, go to step 10.

   NO—Go to step 3.

3. Check the BRAKE SWITCH in the VSA DATA LIST with the HDS while moving the brake pedal.

   Does it indicate ON when the pedal is pressed, and OFF when the pedal is released?

   YES—Intermittent failure, the system is OK at this time.■

   NO—Go to step 4.

4. Check the BRAKE SWITCH in the VSA DATA LIST with the HDS, and disconnect the brake pedal position switch 4P connector.

   Does the indicator change from ON to OFF?

   YES—Replace the brake pedal position switch (see page 19-6).■

   NO—Go to step 5.

5. Turn the ignition switch to LOCK (0).

6. Short the SCS line with the HDS.

7. Disconnect ECM/PCM connector A (49P).

8. Turn the ignition switch to ON (II).

9. Measure the voltage between brake pedal position switch 4P connector terminal No. 2 and body ground.

BRAKE PEDAL POSITION SWITCH 4P CONNECTOR

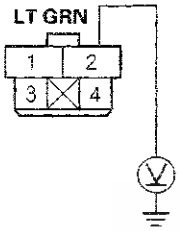

Wire side of female terminals

Is there 0.1 V or more?

YES—Repair short to power in the wire between the ECM/PCM and the brake pedal position switch. ■

NO—Update the ECM/PCM if it does not have the latest software (see page 11-215), or substitute a known-good ECM/PCM (see page 11-7), then go to step 1 and recheck. If the ECM/PCM was updated and DTCs are not indicated, troubleshooting is complete. If the ECM/PCM was substituted and DTCs are not indicated, replace the original ECM/PCM (see page 11-216).

10. Update the VSA modulator-control unit if it does not have the latest software (see page 19-140). If the unit already has the latest software, substitute a known-good VSA modulator-control unit (see page 19-141).

11. Turn the ignition switch to LOCK (0), then turn it to ON (II) again.

12. Check for DTCs with the HDS.

Is DTC 68-22 indicated?

YES—Check for loose terminals in the VSA modulator-control unit 36P connector. If the VSA modulator-control unit was updated, substitute a known-good VSA modulator-control unit (see page 19-141), then retest. If the VSA modulator-control unit was substituted, go to step 1.

NO—If the VSA modulator-control unit was updated, troubleshooting is complete. If the VSA modulator-control unit was substituted, replace the original VSA modulator-control unit (see page 19-141). If any other DTCs are indicated, go to the indicated DTCs troubleshooting. ■

DTC Troubleshooting (cont'd)

DTC 71-21: Right-front or Left-rear Different Diameter Tire Malfunction

DTC 71-22: Left-front or Right-rear Different Diameter Tire Malfunction

DTC 71-23: Right-front and Right-rear Different Diameter Tire Malfunction

DTC 71-24: Left-front and Left-rear Different Diameter Tire Malfunction

DTC 71-25: Right-front and Left-front Different Diameter Tire Malfunction

DTC 71-26: Right-rear and Left-rear Different Diameter Tire Malfunction

DTC 71-27: Right-front or Left-rear Different Diameter Tire Malfunction

DTC 71-28: Left-front or Right-rear Different Diameter Tire Malfunction

DTC 71-29: Right-front and Right-rear Different Diameter Tire Malfunction

DTC 71-2A: Left-front and Left-rear Different Diameter Tire Malfunction

DTC 71-2B: Right-front and Left-front Different Diameter Tire Malfunction

DTC 71-2C: Right-rear and Left-rear Different Diameter Tire Malfunction

NOTE: The DTC will be indicated when the vehicle has a different diameter tire(s) compared to the other tires.

DTC	Sectional	Note
71-21	Right-front or left-rear	
71-22	Left-front or right-rear	
71-23	Right-front and right-rear	
71-24	Left-front and left-rear	
71-25	Right-front and left-front	
71-26	Right-rear and left-rear	
71-27	Right-front or left-rear	
71-28	Left-front or right-rear	
71-29	Right-front and right-rear	
71-2A	Left-front and left-rear	
71-2B	Right-front and left-front	
71-2C	Right-rear and left-rear	

1. Check the tires for proper inflation and the correct size (see page 18-5).
2. Turn the ignition switch to ON (II).
3. Clear the DTC with the HDS.
4. Test-drive the vehicle.

   NOTE: Drive the vehicle on the road, not on a lift.
5. Check for DTCs with the HDS.

   Is DTC 71-21, 71-22, 71-23, 71-24, 71-25, 71-26, 71-27, 71-28, 71-29, 71-2A, 71-2B, or 71-2C indicated?

   YES—Replace tires as needed until all their diameters match (see page 18-5). ■

   NO—Intermittent failure, the system is OK at this time. ■

DTC 81-xx*: Central Processing Unit (CPU) Internal Circuit Malfunction

*: Any two-character subcode (Except these combinations: DTC 81-07, 81-11, 81-3D, 81-3E, 81-51, 81-52, 81-53, 81-54, 81-55, 81-56, 81-57, 81-58, and 81-59)

1. Turn the ignition switch to ON (II).
2. Clear the DTC with the HDS.
3. Turn the ignition switch to LOCK (0), then turn it to ON (II) again.
4. Check for DTCs with the HDS.

   Is DTC 81-xx indicated?

   YES—If DTC 81-07, 81-11, 81-3D, 81-3E, 81-51, 81-52, 81-53, 81-54, 81-55, 81-56, 81-57, 81-58, or 81-59 is indicated at the same time, do the appropriate troubleshooting first. If DTC 81-07, 81-11, 81-3D, 81-3E, 81-51, 81-52, 81-53, 81-54, 81-55, 81-56, 81-57, 81-58, or 81-59 is not indicated. Go to step 5.

   NO—Intermittent failure, the system is OK at this time.■

5. Update the VSA modulator-control unit if it does not have the latest software (see page 19-140). If the unit already has the latest software, substitute a known-good VSA modulator-control unit (see page 19-141).
6. Turn the ignition switch to LOCK (0), then turn it to ON (II) again.
7. Check for DTCs with the HDS.

   Is DTC 81-xx indicated?

   YES—Check for loose terminals in the VSA modulator-control unit 36P connector. If the VSA modulator-control unit was updated, substitute a known-good VSA modulator-control unit (see page 19-141), then retest. If the VSA modulator-control unit was substituted, go to step 1.

   NO—If the VSA modulator-control unit was updated, troubleshooting is complete. If the VSA modulator-control unit was substituted, replace the original VSA modulator-control unit (see page 19-141). If any other DTCs are indicated, go to the indicated DTCs troubleshooting.■

HONDA

DTC Troubleshooting (cont'd)

DTC 81-07: Central Processing Unit (CPU) Internal Circuit Malfunction

1. Turn the ignition switch to ON (II).
2. Clear the DTC with the HDS.
3. Turn the ignition switch to LOCK (0), then turn it to ON (II) again.
4. Check for DTCs with the HDS.

   Is DTC 81-07 indicated?

   YES—Go to step 5.

   NO—Intermittent failure, the system is OK at this time.■

5. Turn the ignition switch to LOCK (0).
6. Disconnect the steering angle sensor 5P connector (see page 19-137).
7. Disconnect the VSA modulator-control unit 36P connector (see step 3 on page 19-142).
8. Turn the ignition switch to ON (II).
9. Measure the voltage between steering angle sensor 5P connector terminal No. 5 and body ground.

STEERING ANGLE SENSOR 5P CONNECTOR

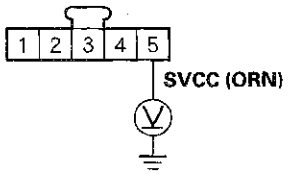

Wire side of female terminals

Is there 0.1 V or more?

YES—Repair short to power in the wire between the steering angle sensor and the VSA modulator-control unit.■

NO—Go to step 10.

10. Turn the ignition switch to LOCK (0).

11. Reconnect all connectors.

12. Update the VSA modulator-control unit if it does not have the latest software (see page 19-140). If the unit already has the latest software, substitute a known-good VSA modulator-control unit (see page 19-141).

13. Turn the ignition switch to LOCK (0), then turn it to ON (II) again.

14. Check for DTCs with the HDS.

    Is DTC 81-07 indicated?

    YES—Check for loose terminals in the VSA modulator-control unit 36P connector. If the VSA modulator-control unit was updated, substitute a known-good VSA modulator-control unit (see page 19-141), then retest. If the VSA modulator-control unit was substituted, go to step 1.

    NO—If the VSA modulator-control unit was updated, troubleshooting is complete. If the VSA modulator-control unit was substituted, replace the original VSA modulator-control unit (see page 19-141). If any other DTCs are indicated, go to the indicated DTCs troubleshooting. ■

DTC 81-11: Central Processing Unit (CPU) Internal Circuit Malfunction

DTC 81-52: Central Processing Unit (CPU) Internal Circuit Malfunction

DTC 81-54: Central Processing Unit (CPU) Internal Circuit Malfunction

DTC 81-56: Central Processing Unit (CPU) Internal Circuit Malfunction

DTC 81-58: Central Processing Unit (CPU) Internal Circuit Malfunction

1. Turn the ignition switch to ON (II).

2. Clear the DTC with the HDS.

3. Test-drive the vehicle.

   NOTE: Drive the vehicle on the road, not on a lift.

4. Check for DTCs with the HDS.

   Is DTC 81-11, 81-52, 81-54, 81-56, or 81-58 indicated?

   YES—Go to step 5.

   NO—Intermittent failure, the system is OK at this time. ■

(cont'd)

DTC Troubleshooting (cont'd)

5. Update the VSA modulator-control unit if it does not have the latest software (see page 19-140). If the unit already has the latest software, substitute a known-good VSA modulator-control unit (see page 19-141).

6. Test-drive the vehicle.

   NOTE: Drive the vehicle on the road, not on a lift.

7. Check for DTCs with the HDS.

   Is DTC 81-11, 81-52, 81-54, 81-56, or 81-58 indicated?

   YES—Check for loose terminals in the VSA modulator-control unit 36P connector. If the VSA modulator-control unit was updated, substitute a known-good VSA modulator-control unit (see page 19-141), then retest. If the VSA modulator-control unit was substituted, go to step 1.

   NO—If the VSA modulator-control unit was updated, troubleshooting is complete. If the VSA modulator-control unit was substituted, replace the original VSA modulator-control unit (see page 19-141). If any other DTCs are indicated, go to the indicated DTCs troubleshooting. ■

DTC 81-51: Central Processing Unit (CPU) Internal Circuit Malfunction

DTC 81-53: Central Processing Unit (CPU) Internal Circuit Malfunction

DTC 81-55: Central Processing Unit (CPU) Internal Circuit Malfunction

DTC 81-57: Central Processing Unit (CPU) Internal Circuit Malfunction

1. Turn the ignition switch to ON (II).

2. Clear the DTC with the HDS.

3. Test-drive the vehicle.

   NOTE: Drive the vehicle on the road, not on a lift.

4. Check for DTCs with the HDS.

   Is DTC 81-51, 81-53, 81-55, or 81-57 indicated?

   YES—Go to step 5.

   NO—Intermittent failure, the system is OK at this time. ■

5. Turn the ignition switch to LOCK (0).

6. Disconnect the VSA modulator-control unit 36P connector (see step 3 on page 19-142).

7. Turn the ignition switch to ON (II).

8. Measure the voltage between body ground and the appropriate VSA modulator-control unit 36P connector terminals (see table).

DTC	VSA Modulator-control Unit 36P Connector Terminal
81-51	No. 23
81-53	No. 19
81-55	No. 18
81-57	No. 21

VSA MODULATOR-CONTROL UNIT 36P CONNECTOR

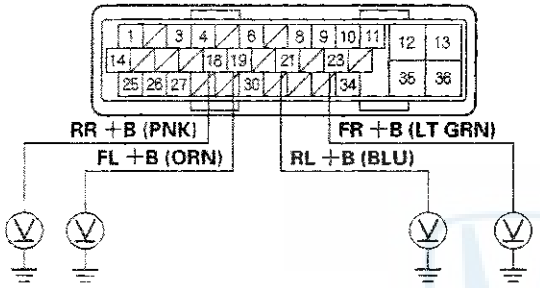

Wire side of female terminals

Is there 0.1 V or more?

YES—Repair short to power in the wire between the appropriate wheel speed sensor and the VSA modulator-control unit. ■

NO—Go to step 9.

9. Turn the ignition switch to LOCK (0).

10. Reconnect the VSA modulator-control unit 36P connector.

11. Update the VSA modulator-control unit if it does not have the latest software (see page 19-140). If the unit already has the latest software, substitute a known-good VSA modulator-control unit (see page 19-141).

12. Test-drive the vehicle.

    NOTE: Drive the vehicle on the road, not on a lift.

13. Check for DTCs with the HDS.

    Is DTC 81-51, 81-53, 81-55, or 81-57 indicated?

    YES—Check for loose terminals in the VSA modulator-control unit 36P connector. If the VSA modulator-control unit was updated, substitute a known-good VSA modulator-control unit (see page 19-141), then retest. If the VSA modulator-control unit was substituted, go to step 1.

    NO—If the VSA modulator-control unit was updated, troubleshooting is complete. If the VSA modulator-control unit was substituted, replace the original VSA modulator-control unit (see page 19-141). If any other DTCs are indicated, go to the indicated DTCs troubleshooting. ■

DTC Troubleshooting (cont'd)

DTC 81-3D: Central Processing Unit (CPU) Internal Circuit Malfunction

DTC 81-3E: Central Processing Unit (CPU) Internal Circuit Malfunction

DTC 81-59: Central Processing Unit (CPU) Internal Circuit Malfunction

1. Turn the ignition switch to ON (II).
2. Clear the DTC with the HDS.
3. Start the engine.
4. Turn the steering wheel from lock-to-lock several times.
5. Check for DTCs with the HDS.

   Is DTC 81-3D, 81-3E, or 81-59 indicated?

   YES—Go to step 6.

   NO—Intermittent failure, the system is OK at this time.■

6. Update the VSA modulator-control unit if it does not have the latest software (see page 19-140). If the unit already has the latest software, substitute a known-good VSA modulator-control unit (see page 19-141).
7. Start the engine.
8. Turn the steering wheel from lock-to-lock several times.
9. Check for DTCs with the HDS.

   Is DTC 81-3D, 81-3E, or 81-59 indicated?

   YES—Check for loose terminals in the VSA modulator-control unit 36P connector. If the VSA modulator-control unit was updated, substitute a known-good VSA modulator-control unit (see page 19-141), then retest. If the VSA modulator-control unit was substituted, go to step 1.

   NO—If the VSA modulator-control unit was updated, troubleshooting is complete. If the VSA modulator-control unit was substituted, replace the original VSA modulator-control unit (see page 19-141). If any other DTCs are indicated, go to the indicated DTCs troubleshooting.■

DTC 83-13: ECM/PCM Communication Error (Engine Malfunction)

DTC 83-14: ECM/PCM Communication Error (A/T Malfunction)

1. Turn the ignition switch to ON (II).
2. Clear the DTC with the HDS.
3. Test-drive the vehicle.

   NOTE: Drive the vehicle on the road, not on a lift.
4. Check for DTCs with the HDS.

   Is DTC 83-13 or 83-14 indicated?

   YES—Go to step 5.

   NO—Intermittent failure, the system is OK at this time. Check for loose terminals between ECM/PCM connector A (49P) and the VSA modulator-control unit 36P connector. Refer to intermittent failures troubleshooting (see page 19-47).■
5. Update the ECM/PCM if it does not have the latest software (see page 11-215), or substitute a known-good ECM/PCM (see page 11-7).
6. Clear the DTC with the HDS.
7. Test-drive the vehicle.

   NOTE: Drive the vehicle on the road, not on a lift.
8. Check for DTCs with the HDS.

   Is DTC 83-13 or 83-14 indicated?

   YES—Go to step 9.

   NO—If the ECM/PCM was updated, troubleshooting is complete. If the ECM/PCM was substituted, replace the original ECM/PCM (see page 11-216).■

(cont'd)

DTC Troubleshooting (cont'd)

9. Update the VSA modulator-control unit if it does not have the latest software (see page 19-140). If the unit already has the latest software, substitute a known-good VSA modulator-control unit (see page 19-141).

10. Test-drive the vehicle.

    NOTE: Drive the vehicle on the road, not on a lift.

11. Check for DTCs with the HDS.

    Is DTC 83-13 or 83-14 indicated?

    YES—Check for loose terminals in the VSA modulator-control unit 36P connector. If the VSA modulator-control unit was updated, substitute a known-good VSA modulator-control unit (see page 19-141), then retest. If the VSA modulator-control unit was substituted, go to step 1.

    NO—If the VSA modulator-control unit was updated, troubleshooting is complete. If the VSA modulator-control unit was substituted, replace the original VSA modulator-control unit (see page 19-141). If any other DTCs are indicated, go to the indicated DTCs troubleshooting. ■

DTC 84-21: VSA Sensor Neutral Position not Writing

1. Turn the ignition switch to ON (II).

2. Clear the DTC with the HDS.

3. Do the VSA sensor neutral position memorization (see page 19-138).

4. Turn the ignition switch to LOCK (0), then turn it to ON (II) again.

5. Check for DTCs with the HDS.

   Is DTC 84-21 indicated?

   YES—Go to step 6.

   NO—The system is OK at this time. ■

6. Update the VSA modulator-control unit if it does not have the latest software (see page 19-140). If the unit already has the latest software, substitute a known-good VSA modulator-control unit (see page 19-141).

7. Do the VSA sensor neutral position memorization (see page 19-138).

8. Turn the ignition switch to LOCK (0), then turn it to ON (II) again.

9. Check for DTCs with the HDS.

   Is DTC 84-21 indicated?

   YES—Check for loose terminals in the VSA modulator-control unit 36P connector. If the VSA modulator-control unit was updated, substitute a known-good VSA modulator-control unit (see page 19-141), then retest. If the VSA modulator-control unit was substituted, go to step 1.

   NO—If the VSA modulator-control unit was updated, troubleshooting is complete. If the VSA modulator-control unit was substituted, replace the original VSA modulator-control unit (see page 19-141). If any other DTCs are indicated, go to the indicated DTCs troubleshooting. ■

DTC 86-01: F-CAN Bus-off Malfunction

1. Turn the ignition switch to ON (II).
2. Clear the DTC with the HDS.
3. Turn the ignition switch to LOCK (0), then turn it to ON (II) again.
4. Check for DTCs with the HDS.

   Is DTC 86-01 indicated?

   YES—Go to step 5.

   NO—Intermittent failure, the system is OK at this time. Check for loose terminals between ECM/PCM connector A (49P) and the VSA modulator-control unit 36P connector. Refer to intermittent failures troubleshooting (see page 19-47).■

5. Turn the ignition switch to LOCK (0).
6. Short the SCS line with the HDS.
7. Disconnect ECM/PCM connector A (49P).
8. Disconnect the VSA modulator-control unit 36P connector (see step 3 on page 19-142).
9. Check for continuity between VSA modulator-control unit 36P connector terminal and ECM/PCM connector A (49P) terminal (see table).

Sign	VSA Modulator-control Unit 36P Connector Terminal	ECM/PCM Connector A (49P) Terminal
CAN-L	No. 1	No. 4
CAN-H	No. 14	No. 3

VSA MODULATOR-CONTROL UNIT 36P CONNECTOR
Wire side of female terminals

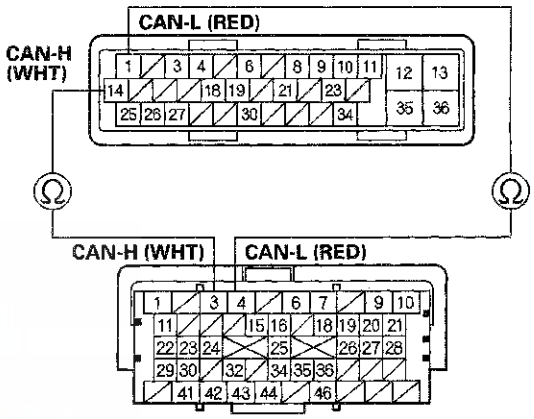

ECM/PCM CONNECTOR A (49P)
Terminal side of female terminals

Is there continuity?

YES—Go to step 10.

NO—Repair open in the wire between the ECM/PCM and the VSA modulator-control unit.■

(cont'd)

DTC Troubleshooting (cont'd)

10. Reconnect all connectors.

11. Update the VSA modulator-control unit if it does not have the latest software (see page 19-140). If the unit already has the latest software, substitute a known-good VSA modulator-control unit (see page 19-141).

12. Turn the ignition switch to LOCK (0), then turn it to ON (II) again.

13. Check for DTCs with the HDS.

    Is DTC 86-01 indicated?

    YES—Check for loose terminals in the VSA modulator-control unit 36P connector. If the VSA modulator-control unit was updated, substitute a known-good VSA modulator-control unit (see page 19-141), then retest. If the VSA modulator-control unit was substituted, go to step 1.

    NO—If the VSA modulator-control unit was updated, troubleshooting is complete. If the VSA modulator-control unit was substituted, replace the original VSA modulator-control unit (see page 19-141). If any other DTCs are indicated, go to the indicated DTCs troubleshooting. ■

DTC 86-11: F-CAN Communication with ECM/PCM Malfunction

DTC 86-21: F-CAN Communication with Engine Malfunction

DTC 86-22: F-CAN Communication with Engine Malfunction

DTC 86-23: F-CAN Communication with Engine Malfunction

DTC 86-24: F-CAN Communication with Engine Malfunction

DTC 86-25: F-CAN Communication with Engine Malfunction

DTC 86-41: F-CAN Communication with EAT Malfunction

1. Turn the ignition switch to ON (II).

2. Clear the DTC with the HDS.

3. Test-drive the vehicle. Drive the vehicle at 7 mph (10 km/h) or more.

   NOTE: Drive the vehicle on the road, not on a lift.

4. Check for DTCs with the HDS.

   Is DTC 86-11, 86-21, 86-22, 86-23, 86-24, 86-25, and/or 86-41 indicated?

   YES—If DTC 86-01 is indicated at the same time, do the DTC 86-01 troubleshooting first (see page 19-123). If DTC 86-01 is not indicated, go to step 5.

   NO—If any other DTCs are indicated, go to the indicated DTCs troubleshooting. If DTCs are not indicated, intermittent failure, the system is OK at this time. Check for loose terminals between ECM/PCM connector A (49P) and the VSA modulator-control unit 36P connector. Refer to intermittent failures troubleshooting (see page 19-47). ■

5. Turn the ignition switch to LOCK (0).

6. Short the SCS line with the HDS.

7. Disconnect ECM/PCM connector A (49P).

8. Disconnect the VSA modulator-control unit 36P connector (see step 3 on page 19-142).

9. Check for continuity between the VSA modulator-control unit 36P connector terminal and ECM/PCM connector A (49P) terminal (see table).

Sign	VSA Modulator-control Unit 36P Connector Terminal	ECM/PCM Connector A (49P) Terminal
CAN-L	No. 1	No. 4
CAN-H	No. 14	No. 3

VSA MODULATOR-CONTROL UNIT 36P CONNECTOR
Wire side of female terminals

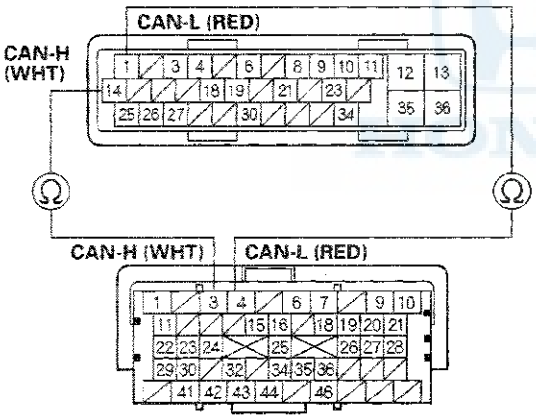

ECM/PCM CONNECTOR A (49P)
Terminal side of female terminals

Is there continuity?

YES—Go to step 10.

NO—Repair open in the wire between the ECM/PCM and the VSA modulator-control unit. ■

10. Reconnect all connectors.

11. Update the ECM/PCM if it does not have the latest software (see page 11-215), or substitute a known-good ECM/PCM (see page 11-7).

12. Clear the DTC with the HDS.

13. Test-drive the vehicle. Drive the vehicle at 7 mph (10 km/h) or more.

    NOTE: Drive the vehicle on the road, not on a lift.

14. Check for DTCs with the HDS.

    Is DTC 86-11, 86-21, 86-22, 86-23, 86-24, 86-25, and/or 86-41 indicated?

    YES—Go to step 15.

    NO—If the ECM/PCM was updated, troubleshooting is complete. If the ECM/PCM was substituted, replace the original ECM/PCM (see page 11-216). ■

(cont'd)

DTC Troubleshooting (cont'd)

15. Update the VSA modulator-control unit if it does not have the latest software (see page 19-140). If the already has the latest software, substitute a known-good VSA modulator-control unit (see page 19-141).

16. Test-drive the vehicle. Drive the vehicle at 7 mph (10 km/h) or more.

    NOTE: Drive the vehicle on the road, not on a lift.

17. Check for DTCs with the HDS.

    Is DTC 86-11, 86-21, 86-22, 86-23, 86-24, 86-25, and/or 86-41 indicated?

    YES—Check for loose terminals in the VSA modulator-control unit 36P connector. If the VSA modulator-control unit was updated, substitute a known-good VSA modulator-control unit (see page 19-141), then retest. If the VSA modulator-control unit was substituted, go to step 1.

    NO—If the VSA modulator-control unit was updated, troubleshooting is complete. If the VSA modulator-control unit was substituted, replace the original VSA modulator-control unit (see page 19-141). If any other DTCs are indicated, go to the indicated DTCs troubleshooting.■

DTC 86-31: F-CAN Communication with Gauge Control Module Malfunction

1. Turn the ignition switch to ON (II).

2. Clear the DTC with the HDS.

3. Turn the ignition switch to LOCK (0), then turn it to ON (II) again.

4. Check for DTCs with the HDS.

   Is DTC 86-31 indicated?

   YES—If DTC 86-01 is indicated at the same time, do the DTC 86-01 troubleshooting first (see page 19-123). If DTC 86-01 is not indicated, go to step 5.

   NO—If any other DTCs are indicated, go to the indicated DTCs troubleshooting. If DTCs are not indicated, intermittent failure, the system is OK at this time. Check for loose terminals between the gauge control module 32P connector and the VSA modulator-control unit 36P connector. Refer to intermittent failures troubleshooting (see page 19-47).■

5. Turn the ignition switch to LOCK (0), then turn it to ON (II) again.

   Does the gauge indicators come on?

   YES—Go to step 6.

   NO—Do the gauge control module troubleshooting (see page 22-304).■

6. Turn the ignition switch to LOCK (0).

7. Disconnect the gauge control module 32P connector.

8. Disconnect the VSA modulator-control unit 36P connector (see step 3 on page 19-142).

9. Check for continuity between the VSA modulator-control unit 36P connector terminal and gauge control module 32P connector terminal (see table).

Sign	VSA Modulator-control Unit 36P Connector Terminal	Gauge Control Module 32P Connector Terminal
CAN-L	No. 1	No. 29
CAN-H	No. 14	No. 30

VSA MODULATOR-CONTROL UNIT 36P CONNECTOR
Wire side of female terminals

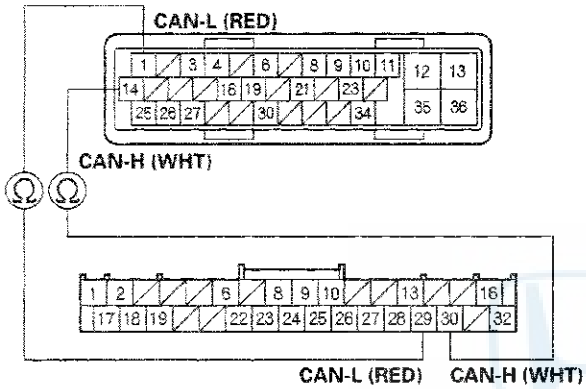

GAUGE CONTROL MODULE 32P CONNECTOR
Wire side of female terminals

Is there continuity?

YES—Check for loose terminals in the gauge control module 32P connector. If necessary, substitute a known-good gauge control module, then go to step 1 and recheck. If no DTCs are indicated, replace the original gauge control module (see page 22-324). If DTC 86-31 resets, go to step 10.

NO—Repair open in the wire between the gauge control module and the VSA modulator-control unit. ■

10. Reconnect all connectors.

11. Update the VSA modulator-control unit if it does not have the latest software (see page 19-140). If the unit already has the latest software, substitute a known-good VSA modulator-control unit (see page 19-141).

12. Turn the ignition switch to LOCK (0), then turn it to ON (II) again.

13. Check for DTCs with the HDS.

Is DTC 86-31 indicated?

YES—Check for loose terminals in the VSA modulator-control unit 36P connector. If the VSA modulator-control unit was updated, substitute a known-good VSA modulator-control unit (see page 19-141), then retest. If the VSA modulator-control unit was substituted, go to step 1.

NO—If the VSA modulator-control unit was updated, troubleshooting is complete. If the VSA modulator-control unit was substituted, replace the original VSA modulator-control unit (see page 19-141). If any other DTCs are indicated, go to the indicated DTCs troubleshooting. ■

DTC Troubleshooting (cont'd)

DTC 86-71: F-CAN Communication with Yaw Rate-Lateral Acceleration Sensor Malfunction

1. Turn the ignition switch to ON (II).
2. Clear the DTC with the HDS.
3. Turn the ignition switch to LOCK (0), then turn it to ON (II) again.
4. Check for DTCs with the HDS.

   Is DTC 86-71 indicated?

   YES—If DTC 86-01 is indicated at the same time, do the DTC 86-01 troubleshooting first (see page 19-123). If DTC 86-01 is not indicated, go to step 5.

   NO—If any other DTCs are indicated, go to the indicated DTCs troubleshooting. If DTCs are not indicated, intermittent failure, the system is OK at this time. Check for loose terminals at the yaw rate-lateral acceleration sensor 5P connector and the VSA modulator-control unit 36P connector. Refer to intermittent failures troubleshooting (see page 19-47).■

5. Turn the ignition switch to LOCK (0).
6. Disconnect the yaw rate-lateral acceleration sensor 5P connector (see page 19-138).
7. Disconnect the VSA modulator-control unit 36P connector (see step 3 on page 19-142).
8. Check for continuity between the VSA modulator-control unit 36P connector terminal and the yaw rate-lateral acceleration sensor 5P connector terminal (see table).

Sign	VSA Modulator-control Unit 36P Connector Terminal	Yaw Rate-lateral Acceleration Sensor 5P Connector Terminal
CAN-L	No. 1	No. 4
CAN-H	No. 14	No. 3

VSA MODULATOR-CONTROL UNIT 36P CONNECTOR
Wire side of female terminals

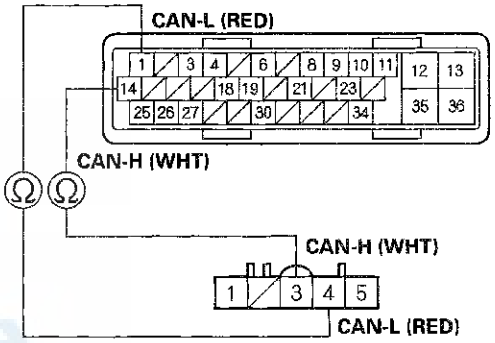

YAW RATE-LATERAL ACCELERATION SENSOR 5P CONNECTOR
Wire side of female terminals

Is there continuity?

YES—Go to step 9.

NO—Repair open in the wire between the yaw rate-lateral acceleration sensor and the VSA modulator-control unit.■

9. Turn the ignition switch to ON (II).

10. Measure the voltage between yaw rate-lateral acceleration sensor 5P connector terminal No. 1 and body ground.

YAW RATE-LATERAL ACCELERATION SENSOR 5P CONNECTOR

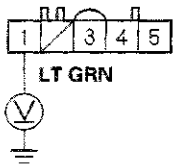

Wire side of female terminals

Is there battery voltage?

YES—Go to step 11.

NO—Repair open in the wire between the No. 6 (7.5 A) fuse in the driver's under-dash fuse/relay box and the yaw rate-lateral acceleration sensor. ■

11. Turn the ignition switch to LOCK (0).

12. Reconnect the yaw rate-lateral acceleration sensor 5P connector.

13. Turn the ignition switch to ON (II).

14. Measure the voltage between yaw rate-lateral acceleration sensor 5P connector terminal No. 5 and body ground.

YAW RATE-LATERAL ACCELERATION SENSOR 5P CONNECTOR

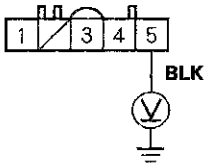

Wire side of female terminals

Is there 0.1 V or less?

YES—Replace the yaw rate-lateral acceleration sensor (see page 19-138). ■

NO—Repair open in the wire between the yaw rate-lateral acceleration sensor and body ground (G503). ■

DTC Troubleshooting (cont'd)

DTC 107-22: Central Processing Unit (CPU) Internal Circuit Malfunction

1. Turn the ignition switch to LOCK (0) to cool the VSA modulator-control unit, and wait 1 hour or more.
2. Turn the ignition switch to ON (II).
3. Clear the DTC with the HDS.
4. Turn the ignition switch to LOCK (0), then turn it to ON (II) again.
5. Check for DTCs with the HDS.

   Is DTC 107-22 indicated?

   YES—Go to step 6.

   NO—The system is OK at this time.■

6. Update the VSA modulator-control unit if it does not have the latest software (see page 19-140). If the unit already has the latest software, substitute a known-good VSA modulator-control unit (see page 19-141).
7. Turn the ignition switch to LOCK (0), then turn it to ON (II) again.
8. Check for DTCs with the HDS.

   Is DTC 107-22 indicated?

   YES—Check for loose terminals in the VSA modulator-control unit 36P connector. If the VSA modulator-control unit was updated, substitute a known-good VSA modulator-control unit (see page 19-141), then retest. If the VSA modulator-control unit was substituted, go to step 1.

   NO—If the VSA modulator-control unit was updated, troubleshooting is complete. If the VSA modulator-control unit was substituted, replace the original VSA modulator-control unit (see page 19-141). If any other DTCs are indicated, go to the indicated DTCs troubleshooting.■

DTC 108-21: Steering Angle Sensor Malfunction

1. Turn the ignition switch to ON (II).
2. Clear the DTC with the HDS.
3. Test-drive the vehicle.

   NOTE: Drive the vehicle on the road, not on a lift.
4. Check for DTCs with the HDS.

   Is DTC 108-21 indicated?

   YES—Go to step 5.

   NO—Intermittent failure, the system is OK at this time.■
5. Turn the ignition switch to LOCK (0).
6. Substitute a known-good steering angle sensor (see page 19-137).
7. Turn the ignition switch to ON (II).
8. Clear the DTC with the HDS.
9. Test-drive the vehicle.

   NOTE: Drive the vehicle on the road, not on a lift.
10. Check for DTCs with the HDS.

    Is DTC 108-21 indicated?

    YES—Go to step 11.

    NO—Replace the original steering angle sensor (see page 19-137).■
11. Update the VSA modulator-control unit if it does not have the latest software (see page 19-140). If the unit already has the latest software, substitute a known-good VSA modulator-control unit (see page 19-141).
12. Test-drive the vehicle.

    NOTE: Drive the vehicle on the road, not on a lift.
13. Check for DTCs with the HDS.

    Is DTC 108-21 indicated?

    YES—Check for loose terminals in the VSA modulator-control unit 36P connector. If the VSA modulator-control unit was updated, substitute a known-good VSA modulator-control unit (see page 19-141), then retest. If the VSA modulator-control unit was substituted, go to step 1.

    NO—If the VSA modulator-control unit was updated, troubleshooting is complete. If the VSA modulator-control unit was substituted, replace the original VSA modulator-control unit (see page 19-141). If any other DTCs are indicated, go to the indicated DTCs troubleshooting.■

DTC Troubleshooting (cont'd)

DTC 121-xx*: VSA Solenoid Valve Malfunction

DTC 122-xx*: VSA Solenoid Valve Malfunction

DTC 123-xx*: VSA Solenoid Valve Malfunction

DTC 124-xx*: VSA Solenoid Valve Malfunction

*: Any two-character subcode (see table)

DTC		Sectional	Valve
121	-01	Right-front and left-rear	Regulator
	-02		
	-11		
	-21		
	-24		
122	-01		Suction
	-21		
	-22		
	-23		
123	-01	Left-front and right-rear	Regulator
	-02		
	-11		
	-21		
	-24		
124	-01		Suction
	-21		
	-22		
	-23		

1. Turn the ignition switch to ON (II).
2. Clear the DTC with the HDS.
3. Turn the ignition switch to LOCK (0), then turn it to ON (II) again.
4. Check for DTCs with the HDS.

   Is DTC 121-xx, 122-xx, 123-xx, or 124-xx indicated?

   YES—Go to step 5.

   NO—Intermittent failure, the system is OK at this time.■

5. Update the VSA modulator-control unit if it does not have the latest software (see page 19-140). If the unit already has the latest software, substitute a known-good VSA modulator-control unit (see page 19-141).
6. Turn the ignition switch to LOCK (0), then turn it to ON (II) again.
7. Check for DTCs with the HDS.

   Is DTC 121-xx, 122-xx, 123-xx, or 124-xx indicated?

   YES—Check for loose terminals in the VSA modulator-control unit 36P connector. If the VSA modulator-control unit was updated, substitute a known-good VSA modulator-control unit (see page 19-141), then retest. If the VSA modulator-control unit was substituted, go to step 1.

   NO—If the VSA modulator-control unit was updated, troubleshooting is complete. If the VSA modulator-control unit was substituted, replace the original VSA modulator-control unit (see page 19-141). If any other DTCs are indicated, go to the indicated DTCs troubleshooting.■

Symptom Troubleshooting

VSA activation indicator does not go off, and no DTCs are stored

1. Turn the ignition switch to ON (II).

2. Check the VSA activation indicator for several seconds when the ignition switch is turned to ON (II).

   Does the indicator come on then go off?

   YES—The system is OK at this time. ■

   NO—Go to step 3.

3. Turn the ignition switch to LOCK (0).

4. Disconnect the VSA OFF switch 5P connector.

5. Check the VSA OFF switch (see page 19-139).

   Is the VSA OFF switch OK?

   YES—Go to step 6.

   NO—Replace the VSA OFF switch (see page 19-139). ■

6. Disconnect the gauge control module 32P connector.

7. Check for continuity between VSA OFF switch 5P connector terminal No. 2 and body ground.

VSA OFF SWITCH 5P CONNECTOR

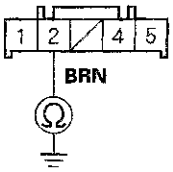

Wire side of female terminals

Is there continuity?

YES—Repair short to body ground in the wire between the gauge control module and the VSA OFF switch. ■

NO—Substitute a known-good gauge control module (see page 22-324), then go to step 1 and recheck. If it is OK, replace the original gauge control module (see page 22-324). ■

Symptom Troubleshooting (cont'd)

ABS indicator, brake system indicator, and VSA indicator do not go off

1. Turn the ignition switch to LOCK (0).
2. Check the No. 6 (7.5 A) fuse in the driver's under-dash fuse/relay box.

   Is the fuse blown?

   YES—Go to step 3.

   NO—Reinstall the checked fuse, then go to step 9.
3. Disconnect the VSA modulator-control unit 36P connector (see step 3 on page 19-142).
4. Disconnect the yaw rate-lateral acceleration sensor 5P connector (see page 19-138).
5. Check for continuity between VSA modulator-control unit 36P connector terminal No. 30 and body ground.

VSA MODULATOR-CONTROL UNIT 36P CONNECTOR

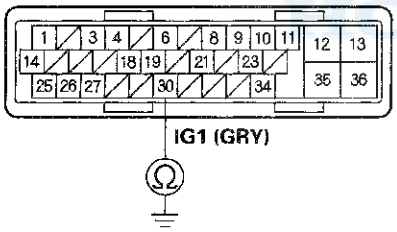

Wire side of female terminals

Is there continuity?

YES—Repair short to body ground in the wire between the No. 6 (7.5 A) fuse in the driver's under-dash fuse/relay box and the VSA modulator-control unit or the yaw rate-lateral acceleration sensor. ■

NO—Install the new No. 6 (7.5 A) fuse in the driver's under-dash fuse/relay box, then go to step 6.

6. Reconnect all connectors.
7. Turn the ignition switch to ON (II).
8. Check the ABS indicator, the brake system indicator and the VSA indicator for several seconds when the ignition switch is turned to ON (II).

   Does the indicators come on then go off?

   YES—The troubleshooting is complete. ■

   NO—Replace the VSA modulator-control unit (see page 19-141). ■
9. Disconnect the VSA modulator-control unit 36P connector (see step 3 on page 19-142).
10. Turn the ignition switch to ON (II).
11. Measure the voltage between VSA modulator-control unit 36P connector terminal No. 30 and body ground.

VSA MODULATOR-CONTROL UNIT 36P CONNECTOR

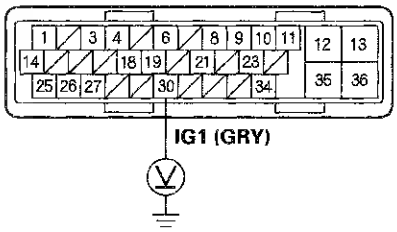

Wire side of female terminals

Is there battery voltage?

YES—Go to step 12.

NO—Repair open in the wire between the No. 6 (7.5 A) fuse in the driver's under-dash fuse/relay box and the VSA modulator-control unit. ■

12. Turn the ignition switch to LOCK (0).

13. Check for continuity between VSA modulator-control unit 36P connector terminal No. 35 and body ground.

VSA MODULATOR-CONTROL UNIT 36P CONNECTOR

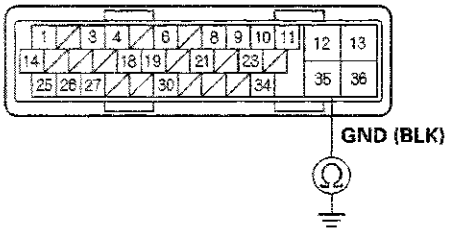

Wire side of female terminals

Is there continuity?

YES—Go to step 14.

NO—Repair open in the wire between the VSA modulator-control unit and body ground (G202).■

14. Measure the voltage between VSA modulator-control unit 36P connector terminal No. 12 and body ground.

VSA MODULATOR-CONTROL UNIT 36P CONNECTOR

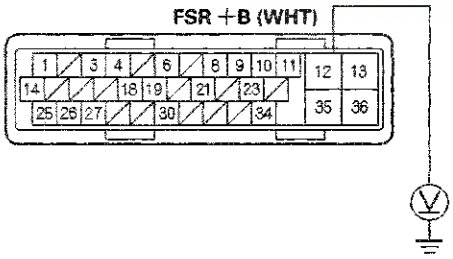

Wire side of female terminals

Is there battery voltage?

YES—Go to step 15.

NO—Repair open in the wire between the No. 2 (40 A) fuse in the under-hood fuse/relay box and the VSA modulator-control unit.■

15. Disconnect the gauge control module 32P connector.

16. Check for continuity between the VSA modulator-control unit 36P connector terminal and gauge control module 32P connector terminal (see table).

Sign	VSA Modulator-control Unit 36P Connector Terminal	Gauge Control Module 32P Connector Terminal
CAN-L	No. 1	No. 29
CAN-H	No. 14	No. 30

VSA MODULATOR-CONTROL UNIT 36P CONNECTOR
Wire side of female terminals

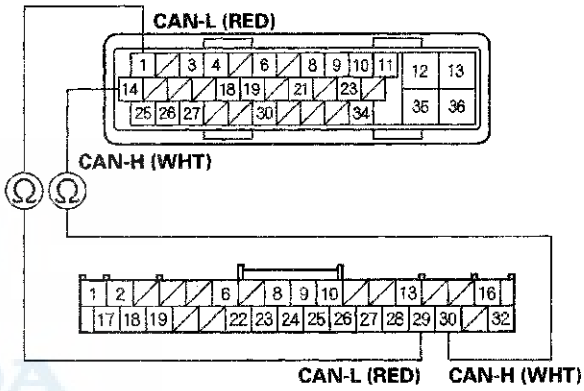

GAUGE CONTROL MODULE 32P CONNECTOR
Wire side of female terminals

Is there continuity?

YES—Go to step 17.

NO—Repair open in the wire between the gauge control module and the VSA modulator-control unit.■

(cont'd)

Symptom Troubleshooting (cont'd)

17. Reconnect all connectors.

18. Update the VSA modulator-control unit if it does not have the latest software (see page 19-140). If the unit already has the latest software, substitute a known-good VSA modulator-control unit (see page 19-141).

19. Turn the ignition switch to LOCK (0), then turn it to ON (II) again.

20. Check the ABS indicator, the brake system indicator and the VSA indicator for several seconds when the ignition switch is turned to ON (II).

    Does the indicators come on then go off?

    YES—If the VSA modulator-control unit was updated, troubleshooting is complete. If the VSA modulator-control unit was substituted, replace the original VSA modulator-control unit (see page 19-141). ■

    NO—Check for loose terminals in the VSA modulator-control unit 36P connector. If the VSA modulator-control unit was updated, substitute a known-good VSA modulator-control unit (see page 19-141), then retest. If the VSA modulator-control unit was substituted, go to step 1.

Steering Angle Sensor Replacement

NOTE: Do not damage or drop the combination switch as the steering angle sensor is sensitive to shock and vibration.

1. With the wheels in the straight-ahead position and the steering wheel centered, remove the steering wheel (see page 17-24).

2. Remove the steering column covers (see page 20-168) and the cable reel (see page 24-218).

3. Remove the combination switch assembly (see step 7 on page 17-29).

4. Remove the combination light switch (A) and the wiper/washer switch (B) from the combination switch body assembly (C).

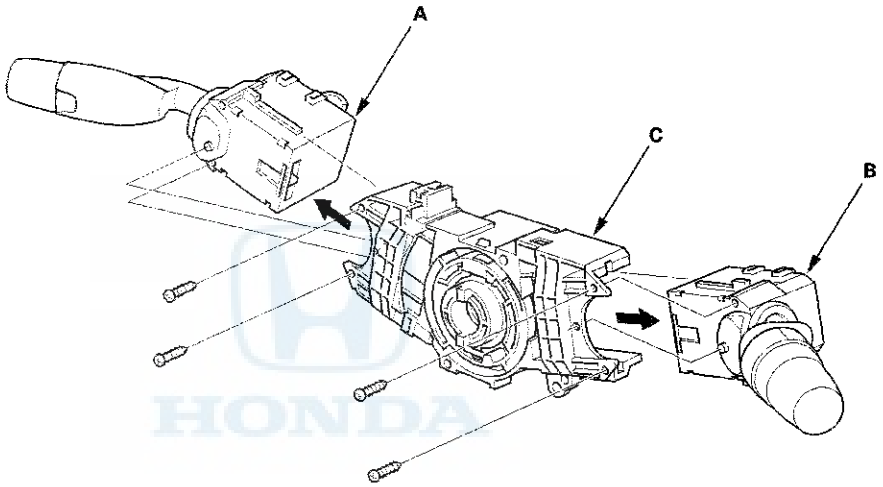

5. Install the combination switch body assembly in the reverse order of removal.

   NOTE:
   - Do not remove the steering angle sensor from the combination switch body.
   - When installing the cable reel, set the turn signal canceling sleeve position so that the arrow points straight up (see page 24-219).
   - Note that the tightening order is specified for the combination switch mounting screws (see page 17-30).

Yaw Rate-Lateral Acceleration Sensor Replacement

NOTE:
- Do not damage or drop the sensor as it is sensitive.
- Do not use power tools when replacing the sensor.

1. Turn the ignition switch to LOCK (0).
2. Remove the center console (see page 20-148).
3. Remove the yaw rate-lateral acceleration sensor (A) mounting bolts.

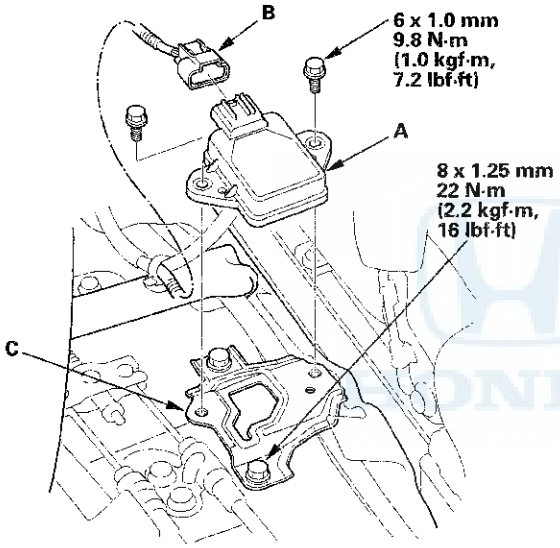

4. Disconnect the yaw rate-lateral acceleration sensor 5P connector (B).
5. Check for deformation in the bracket (C). If necessary replace it.
6. Install the yaw rate-lateral acceleration sensor in the reverse order of removal.
7. Do the VSA sensor neutral position memorization (see page 19-138).

VSA Sensor Neutral Position Memorization

NOTE: Do not press the brake pedal during this procedure.

1. Park the vehicle on a flat and level surface, with the steering wheel in the straight ahead position.
2. With the ignition switch in LOCK (0), connect the HDS to the data link connector (DLC) (A) under the driver's side of the dashboard.

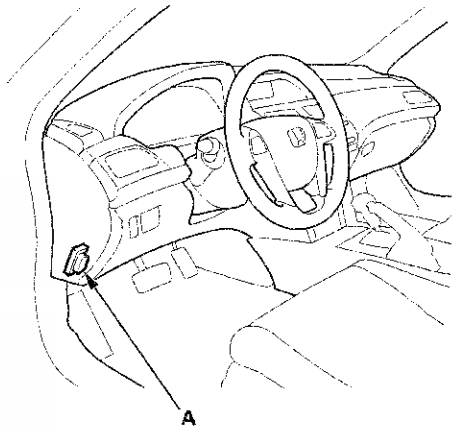

3. Turn the ignition switch to ON (II).
4. Make sure the HDS communicates with the vehicle and the VSA modulator-control unit. If it doesn't, troubleshoot the DLC circuit (see page 11-192).
5. Select VSA ADJUSTMENT with the HDS, and follow the screen prompts.

   NOTE: See the HDS Help menu for specific instructions.
6. Turn the ignition switch to LOCK (0).

VSA OFF Switch Test

1. Turn the ignition switch to LOCK (0).
2. Remove the driver's dashboard lower cover (see page 20-153).
3. Push out the VSA OFF switch (A) from the driver's dashboard lower cover.

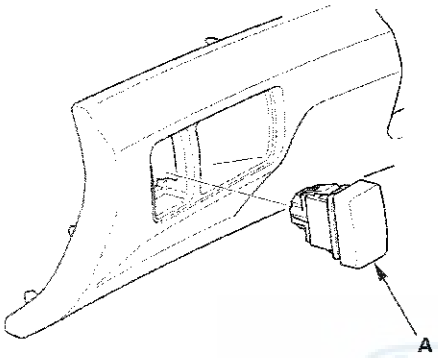

4. Check for continuity between the VSA OFF switch 5P connector terminals No. 1 and No. 2. There should be continuity when the button is pressed, and no continuity when the button is released.

VSA OFF SWITCH 5P CONNECTOR

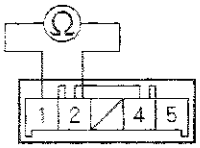

Terminal side of male terminals

5. Check for continuity between VSA OFF switch 5P connector terminals No. 4 and No. 5. There should be continuity at all times.

VSA OFF SWITCH 5P CONNECTOR

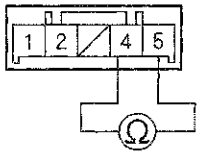

Terminal side of male terminals

6. Install the VSA OFF switch in the reverse order of removal.

VSA Modulator-Control Unit Update

Special Tools Required
- Honda diagnostic system (HDS) tablet tester
- Honda interface module (HIM) and an iN workstation with HDS and CM update software
- HDS pocket tester
- GNA-600 and an iN workstation with HDS and CM update software

Use any one of these update tools.

NOTE:
- Use this procedure when you need to update the VSA modulator-control unit at anytime.
- Make sure the HDS/HIM has the latest software version.
- Before you update the VSA modulator-control unit, make sure the battery in the vehicle is fully charged, and connect a jumper battery (not a battery charger) to maintain system voltage.
- Never turn the ignition switch to LOCK (0) or ACC (I) during the update. If there is a problem with the update, leave the ignition switch in ON (II).
- To prevent VSA modulator-control unit damage, do not operate anything electrical (headlights, audio system, brakes, A/C, power windows, door locks, etc.) during the update.
- To ensure the latest program is installed, do a VSA modulator-control unit update whenever the VSA modulator-control unit is substituted or replaced.
- You cannot update a VSA modulator-control unit with a program it already has. It will only accept a new program.
- High temperature in the engine compartment might cause the VSA modulator-control unit to become too hot to run the update. If the engine has been running before this procedure, open the hood and cool the engine compartment.
- If you need to diagnose the Honda interface module (HIM) because the HIM's red (#3) light came on or was flashing during the update, leave the ignition switch in ON (II) when you disconnect the HIM from the data link connector (DLC). This will prevent VSA modulator-control unit damage.
- DTCs stored in memory are cleared when the VSA modulator-control unit is updated.

1. Turn the ignition switch to ON (II), but do not start the engine.

2. Connect the HDS to the data link connector (DLC) (A) located under the driver's side of the dashboard.

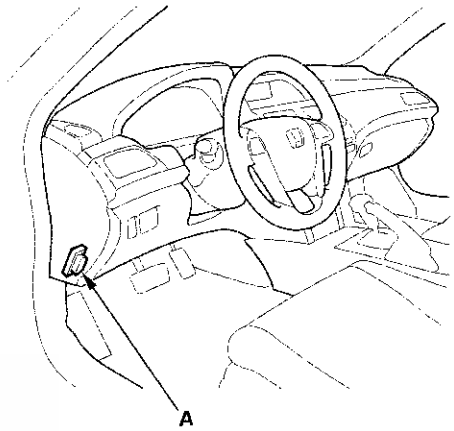

3. Make sure the HDS communicates with the vehicle and the VSA modulator-control unit. If it doesn't, troubleshooting the DLC circuit (see page 11-192).

4. Select the update mode, and follow the screen prompts to update the VSA modulator-control unit.

5. If the software in the VSA modulator-control unit is the latest, disconnect the HDS/HIM from the DLC. If the software in the VSA modulator-control unit is not the latest, follow the instructions on the screen.

6. Do the VSA sensor neutral position memorization procedure (see page 19-138).

VSA Modulator-Control Unit Removal and Installation

NOTE:
- Do not spill brake fluid on the vehicle; it may damage the paint; if brake fluid gets on the paint, wash it off immediately with water.
- Be careful not to damage or deform the brake lines during removal and installation.
- Plug the ends of the hoses and joints to prevent spilling brake fluid.

Removal

1. Turn the ignition switch to LOCK (0).
2. Remove the suction line mount bolt (A) from the bracket.

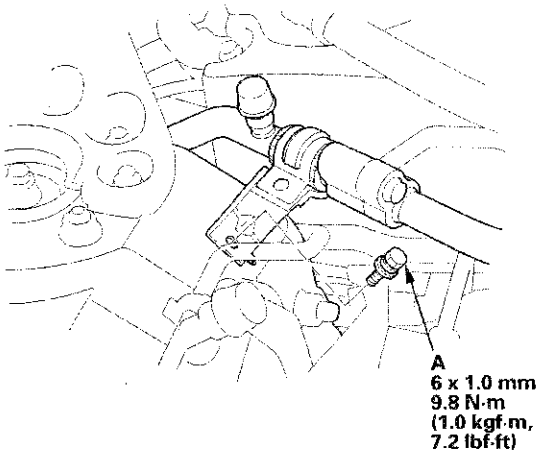

(cont'd)

VSA Modulator-Control Unit Removal and Installation (cont'd)

3. Disconnect the VSA modulator-control unit 36P connector (A) by pushing the lock (B) and pulling down the lever (C); the connector disconnects itself.

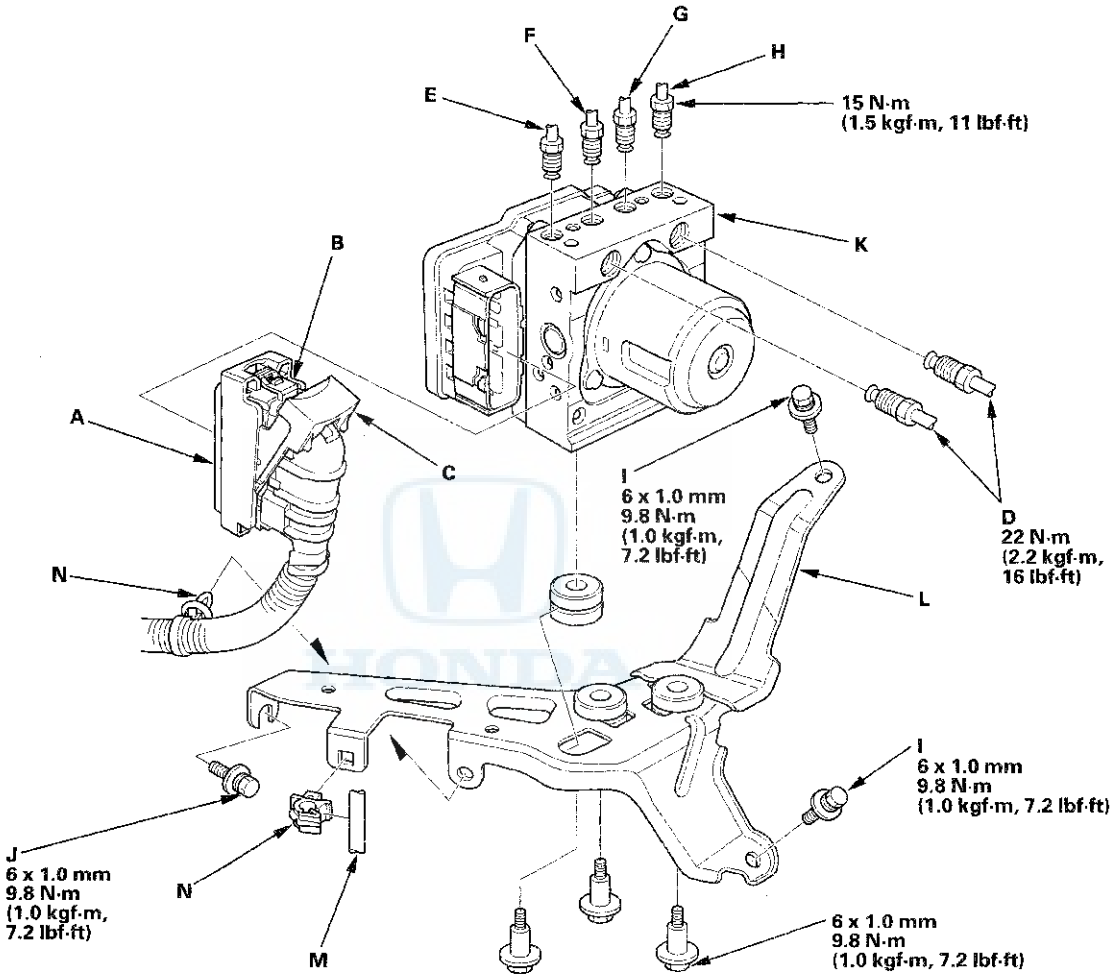

4. Disconnect the six brake lines from the VSA modulator-control unit.

   NOTE: Brake lines are connected to the master cylinder (D) and to the left-rear (E), the right-front (F), the left-front (G), and the right-rear (H) brake systems.

5. Remove the 6 x 12 mm flange bolts (I) and 6 x 16 mm flange bolt (J), then remove the VSA modulator-control unit (K) with the bracket (L) from the body.

6. Remove the receiver line (M) from the bracket, then remove the clips (N).

7. Remove the VSA modulator-control unit from the bracket.

Installation

1. Install the VSA modulator-control unit onto the bracket.
2. Install the clips to the bracket, then install the receiver line.
3. Install the bracket with the VSA modulator-control unit to the body.
4. Reconnect the six brake lines, then tighten the flare nuts to the specified torque.
5. Align the connecting surface of the VSA modulator-control unit 36P connector to the VSA modulator-control unit.
6. Pull up the lever of the VSA modulator-control unit 36P connector, then confirm the connector is fully seated.
7. Install the suction line mount bolt to the bracket.
8. Bleed the brake system (see page 19-9).
9. Do the VSA sensor neutral position memorization procedure (see page 19-138).
10. Start the engine, and make sure the ABS and the VSA indicators go off.
11. Test-drive the vehicle, and make sure the ABS and the VSA indicators do not come on.

    NOTE: If the brake pedal is spongy, there may be air trapped in the modulator which could then be induced into the normal brake system during modulation. Bleed the brake system again (see page 19-9).

HONDA

Wheel Speed Sensor Replacement

Front

1. Turn the ignition switch to LOCK (0).
2. Release the clamp (A), then disconnect the wheel speed sensor connector (B).

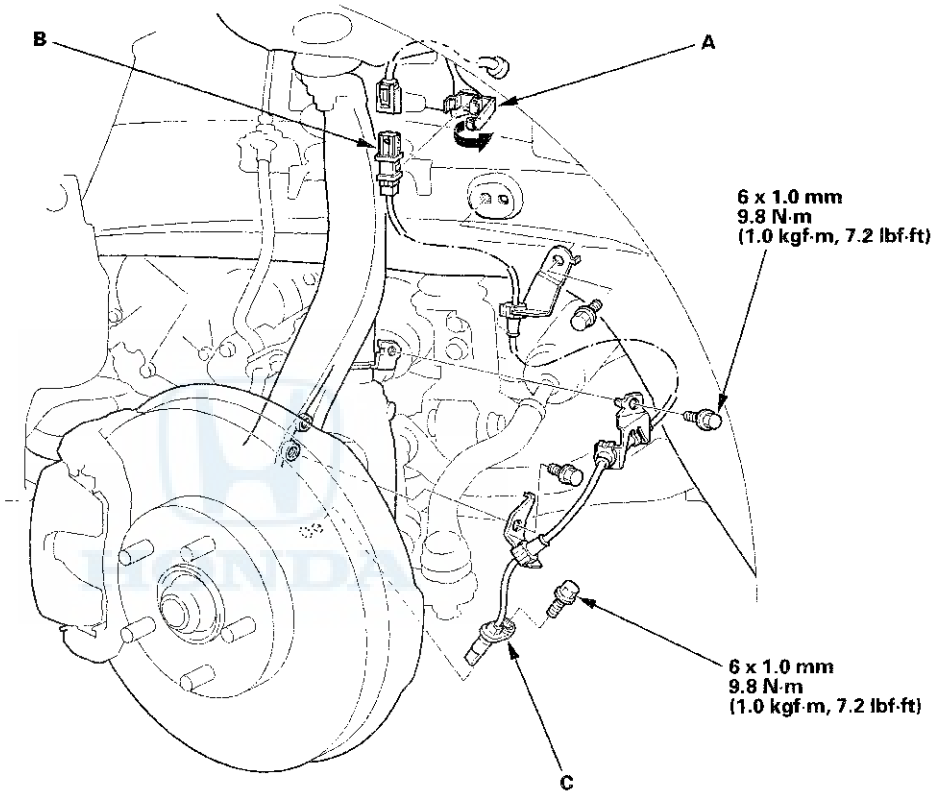

3. Remove the bolts and the wheel speed sensor (C).
4. Install the wheel speed sensor in the reverse order of removal, and note these items:
   - Install the wheel speed sensor carefully to avoid twisting the wires.
   - If the wheel speed sensor comes in contact with the wheel bearing, it is faulty. Investigate the cause before replacing the sensor.
5. Start the engine, and make sure the ABS and the VSA indicators go off.
6. Test-drive the vehicle, and make sure the ABS and the VSA indicators do not come on.

Rear

1. Turn the ignition switch to LOCK (0).

2. Release the clamp (A), then disconnect the wheel speed sensor connector (B).

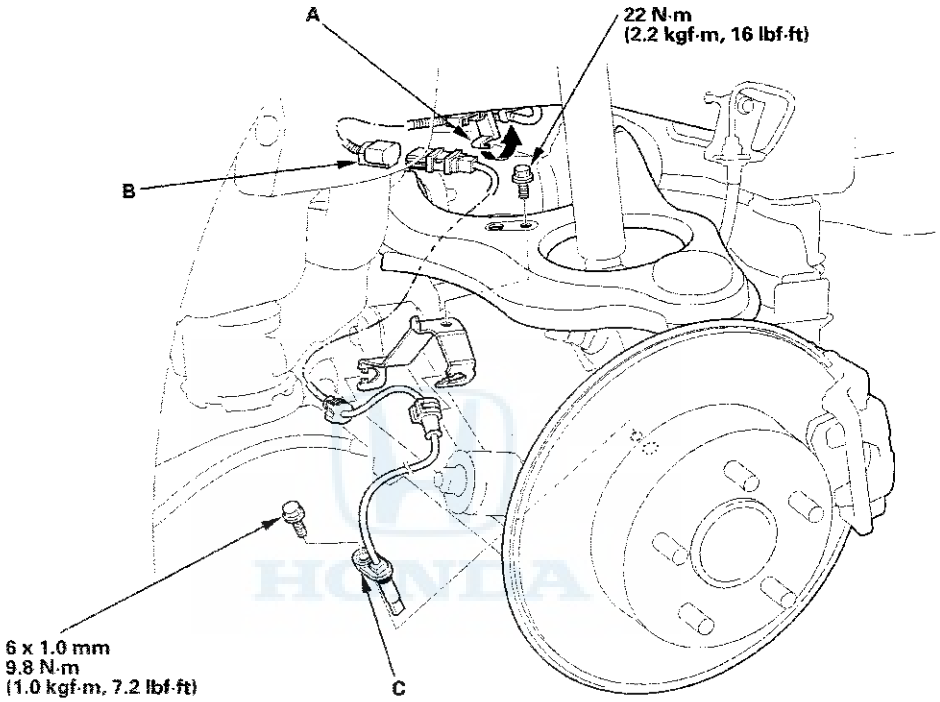

3. Remove the clamps, the bolt, and the wheel speed sensor (C).

4. Install the wheel speed sensor in the reverse order of removal, and note these items:

   - Install the wheel speed sensor carefully to avoid twisting the wires.
   - If the wheel speed sensor comes in contact with the hub bearing unit, it is faulty. Investigate the cause before replacing the sensor.

5. Start the engine, and make sure the ABS and the VSA indicators go off.

6. Test-drive the vehicle, and make sure the ABS and the VSA indicators do not come on.

HONDA

SUPPLEMENTAL RESTRAINT SYSTEM (SRS) (If body maintenance is required)

The Accord SRS includes a driver's airbag in the steering wheel hub, a passenger's airbag in the dashboard above the glove box, seat belt tensioners in the front seat belt retractors, side curtain airbags in the sides of the roof, and side airbags in the front seat-backs. Information necessary to safely service the SRS is included in this Service Manual. Items marked with an asterisk (*) on the contents page include or are located near SRS components. Servicing, disassembling, or replacing these items requires special precautions and tools, and should be done by an authorized Honda dealer.

- To avoid rendering the SRS inoperative, which could lead to personal injury or death in the event of a severe frontal or side collision, all SRS service work should be done by an authorized Honda dealer.
- Improper service procedures, including incorrect removal and installation of the SRS, could lead to personal injury caused by unintentional deployment of the airbags, side airbags, and/or side curtain airbags.
- Do not bump or impact the SRS unit, front impact sensors, side impact sensors, or rear safing sensor when the ignition switch is in ON (II), or for at least 3 minutes after the ignition switch is turned to LOCK (0); otherwise, the system may fail in a collision, or the airbags may deploy.
- SRS electrical connectors are identified by yellow color coding. Related components are located in the steering column, front console, dashboard, dashboard lower panel, in the dashboard above the glove box, in the front seats, in the roof side, and around the floor. Do not use electrical test equipment on these circuits.

Navigation Tools: Click on the "Table of Contents" below, or use the Bookmarks to the left.

Body

Special Tools 20-2

Doors
Component Location Index 20-3
Front Door Panel Removal/Installation 20-12
Front Door Outer Handle Replacement 20-19
Front Door Latch Replacement 20-23
Front Door Glass and Regulator Replacement 20-26
Front Door Sash Inner Trim Replacement 20-29
Front Door Sash Outer Trim Replacement 20-31
Front Door Glass Outer Weatherstrip Replacement 20-31
Front Door Outer Molding Replacement 20-33
Front Door Weatherstrip Replacement 20-34
Rear Door Panel Removal/Installation 20-35
Rear Door Outer Handle Replacement 20-38
Rear Door Latch Replacement 20-40
Rear Door Glass and Regulator Replacement 20-42
Rear Door Sash Inner Trim Replacement 20-45
Rear Door Sash Outer Trim Replacement 20-46
Rear Door Glass Outer Weatherstrip Replacement 20-47
Rear Door Outer Molding Replacement ... 20-48
Rear Door Weatherstrip Replacement 20-49
Door Glass Adjustment 20-50
Door Position Adjustment 20-51
Door Striker Adjustment 20-53

Mirrors
Component Location Index 20-54
Power Mirror Replacement 20-55
Mirror Holder Replacement 20-56
Mirror Housing Cover Replacement 20-57
Rearview Mirror Replacement 20-57

Glass
Component Location Index 20-59
Windshield Replacement 20-61
Rearview Mirror Harness Cover Base Replacement 20-66
Rear Window Replacement 20-67
Quarter Glass Replacement 20-76

Moonroof
Component Location Index 20-81
Symptom Troubleshooting Index 20-82
Glass Position Adjustment 20-83
Glass Replacement 20-83
Glass Weatherstrip Replacement 20-84
Wind Deflector Replacement 20-85
Drain Channel Replacement 20-86
Sunshade Replacement 20-87
Motor Replacement 20-88
* Frame and Drain Tube Replacement 20-88
Drain Channel Slider and Cable Assembly Replacement 20-91
Closing Force and Opening Drag Check ... 20-93

Interior Trim
Component Location Index 20-95
Trim Removal/Installation - Door Areas ... 20-97
* Trim Removal/Installation - Pillar Areas ... 20-101
* Trim Removal/Installation - Rear Side Area 20-118
* Trim Removal/Installation - Rear Shelf Area 20-119
Trim Removal/Installation - Trunk Area 20-123
Trim Removal/Installation - Trunk Lid 20-126
Sunvisor Removal/Installation 20-127
Grab Handle Removal/Installation 20-129
* Headliner Removal/Installation 20-131
* Carpet Replacement 20-140

Consoles
Center Console Panel Removal/Installation 20-146
Center Console Removal/Installation 20-148
Center Console Rear Trim Removal/Installation 20-149
Console Armrest Removal/Installation 20-150

Dashboard
Instrument Visor Removal/Installation 20-152
Driver's Dashboard Lower Cover Removal/Installation 20-153
Driver's Outer Dashboard Trim Removal/Installation 20-154
Driver's Inner Dashboard Trim Removal/Installation 20-154
Center Pocket Removal/Installation 20-155
* Dashboard Center Lower Cover Removal/Installation 20-157
Center Display Visor Removal/Installation 20-158
Passenger's Dashboard Trim Removal/Installation 20-160
Glove Box Lock Cylinder Replacement 20-160
* Glove Box Removal/Installation 20-161
* Glove Box Striker Replacement 20-163
Dashboard Side Vent Removal/Installation 20-163
Dashboard Center Vent Removal/Installation 20-164
Side Defogger Vent Trim Removal/Installation 20-165
Driver's Outer Middle Pad Removal/Installation 20-166
Driver's Inner Middle Pad Removal/Installation 20-166
* Passenger's Middle Pad Removal/Installation 20-167
Column Cover Removal/Installation 20-168
* Dashboard/Steering Hanger Beam Removal/Installation 20-169
Dashboard/Steering Hanger Beam Disassembly/Reassembly 20-175

Navigation Tools: Click on the "Table of Contents" below, or use the Bookmarks to the left.

Seats
Component Location Index 20-178
Front Seat Active Head Restraint Inspection 20-180
* Front Seat Removal/Installation 20-181
* Front Seat Recline Motor Replacement 20-187
* Front Seat Lumbar Support Replacement 20-188
* Front Seat Slide Motor Replacement 20-189
Front Seat Slide Lever Replacement 20-191
Front Seat Torsion Bar Replacement 20-191
Rear Seat Access Cable Replacement 20-192
Front Seat Frame Replacement 20-193
* Front Seat-back Cover Replacement 20-199
* Front Seat Cushion Cover Replacement 20-209
* Rear Seat Removal/Installation 20-223
Rear Seat-back Latch Replacement 20-226
Rear Seat-back Release Lever/Cable Removal/Installation 20-227
Rear Seat Armrest Replacement 20-228
Trunk Pass-through Lid Lock Cylinder Replacement 20-230
Trunk Pass-through Lid Replacement 20-231
Rear Seat Armrest Beverage Holder Replacement 20-231
Rear Seat-back Cover Replacement 20-232
Rear Seat Side Bolster Cover Replacement 20-236
Rear Seat Cushion Cover Replacement 20-237

Bumpers
Front Bumper Removal/Installation 20-239
Front Bumper Fog Light Cover Replacement 20-242
Front Air Spoiler Replacement 20-243
Rear Bumper Removal/Installation 20-244
Rear Bumper Finisher Cover Replacement 20-247

Hood
Hood Adjustment 20-248
Hood Seal and Hood Molding Replacement 20-249
Hood Insulator Replacement 20-250

Trunk Lid
Trunk Lid Adjustment 20-251
Trunk Lid Torsion Bar Replacement 20-252
Trunk Lid Weatherstrip Replacement 20-253
Trunk Lid Cushion Replacement 20-253
Trunk Lid Dynamic Damper Replacement 20-254

Fuel Fill Door
Fuel Fill Door Adjustment 20-255
Fuel Cap Adapter Replacement 20-256

Exterior Trim
Front Grille Cover Replacement 20-257
Front Grille Replacement 20-258
Front Fender Trim Replacement 20-260
Cowl Cover Replacement 20-261
Roof Molding Replacement 20-263
Side Sill Protection Tape Replacement 20-267
Trunk Lower Trim Replacement 20-269
Emblem/Sticker Replacement 20-271

Fenderwell
Front Inner Fender Replacement 20-273
Front Splash Shield Replacement 20-274
Front Fender Fairing Replacement 20-275
Middle Floor Undercover Replacement ... 20-276
Fuel Pipe Protector Replacement 20-277
Rear Inner Fender Replacement 20-277
Rear Air Outlet Replacement 20-278

Openers
Component Location Index 20-279
Hood Opener Cable Replacement 20-280
* Trunk Lid Opener Cable/Fuel Fill Door Opener Cable Replacement 20-281
Hood Latch Replacement 20-285
Hood Release Handle Replacement 20-286
Trunk Lid Opener/Fuel Fill Door Opener Replacement 20-286
Trunk Lid Latch Replacement 20-288

Frame
Frame Brace Replacement 20-289
Rear Wheelhouse Gusset Replacement 20-289
Middle Cross-member Gusset Replacement 20-290
Subframe Replacement 20-291
Frame Repair Chart 20-294

Special Tools

Ref. No.	Tool Number	Description	Qty
①	07AAF-SNAA100	Torsion Bar Assembly Tool	1
②	070AG-SJAA10S	Subframe Alignment Pin	1

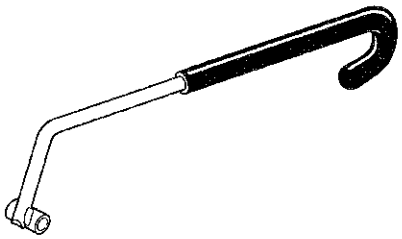

①

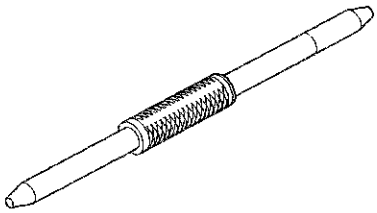

②

Component Location Index

2-door

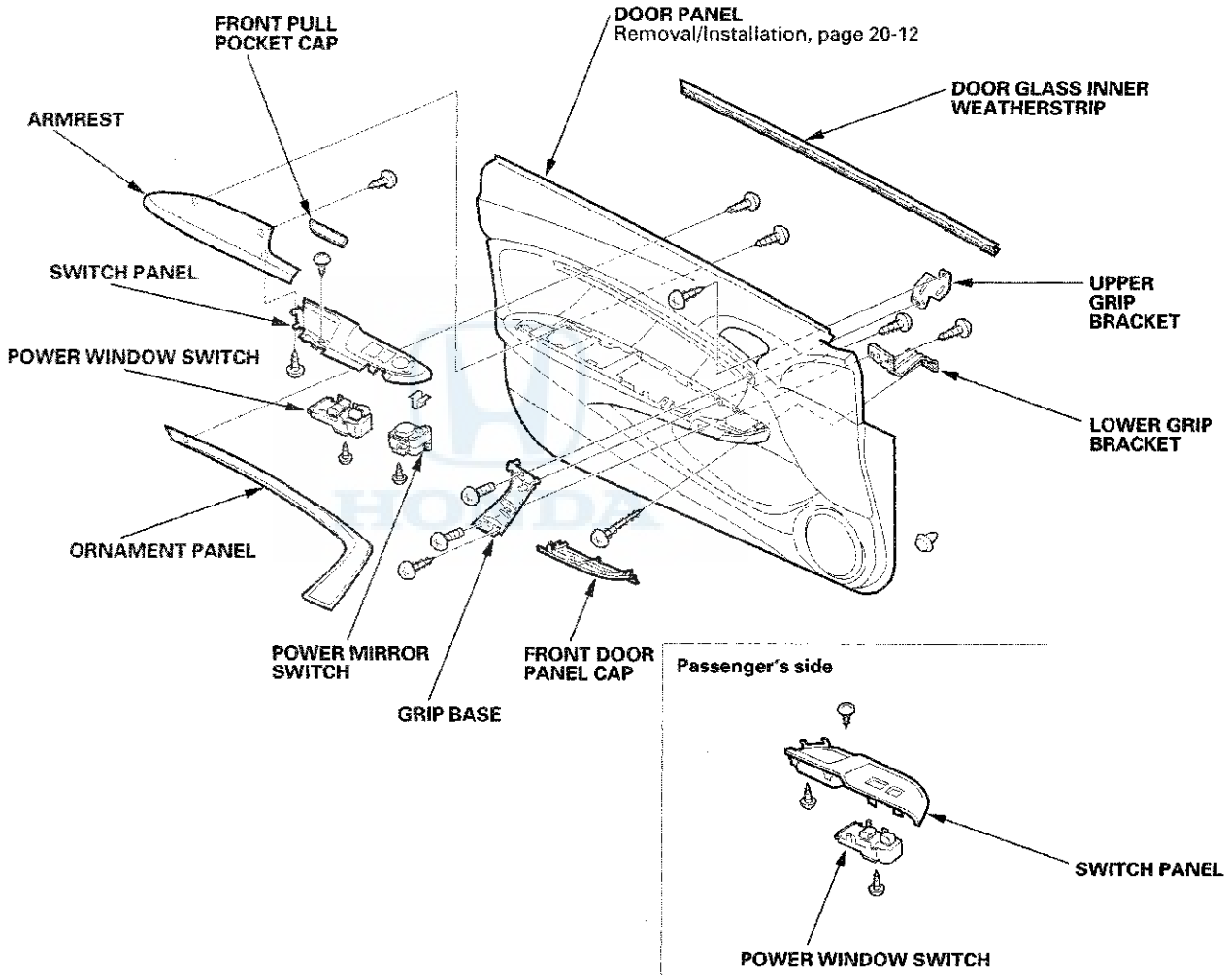

(cont'd)

Component Location Index (cont'd)

2-door (cont'd)

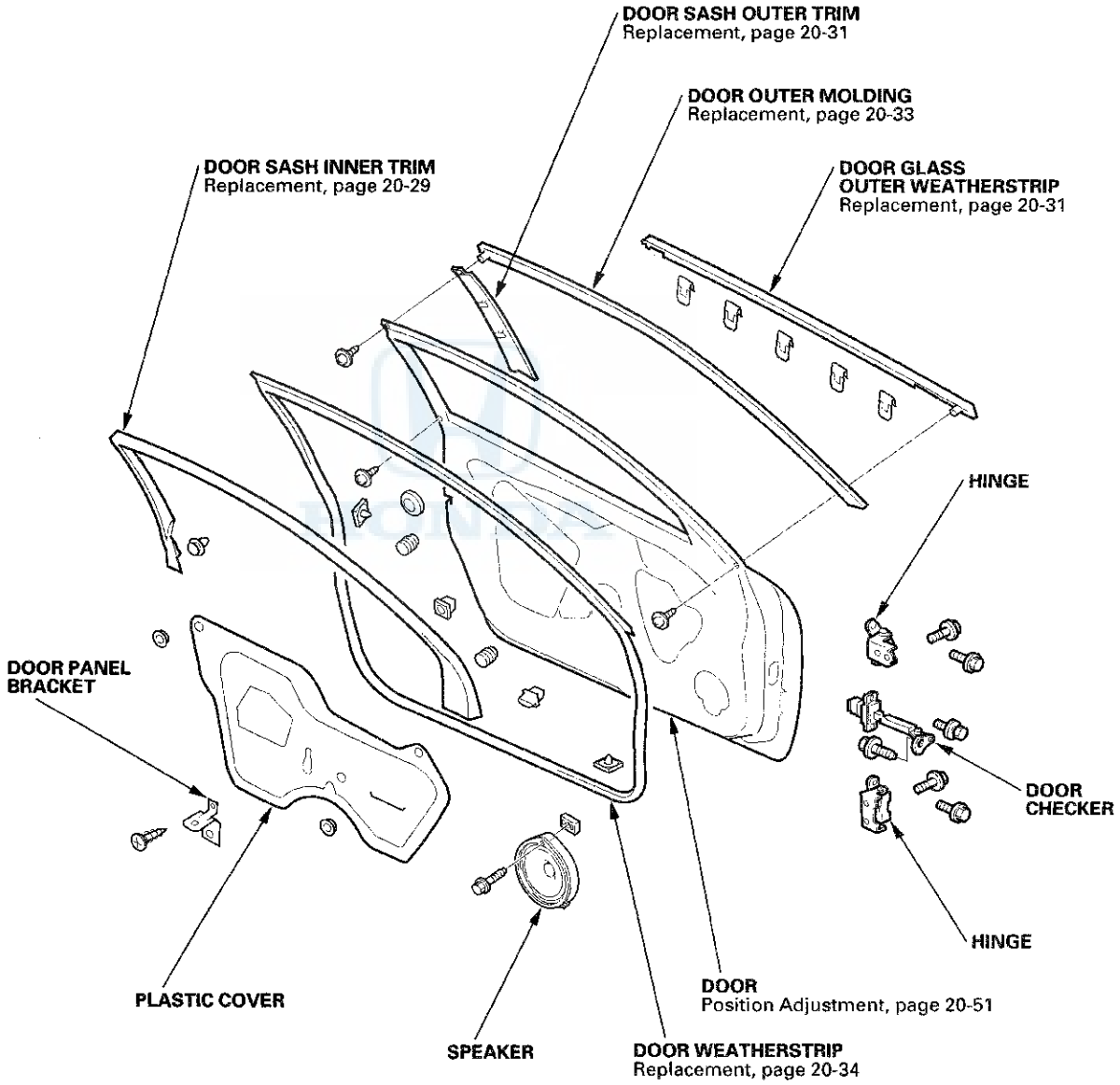

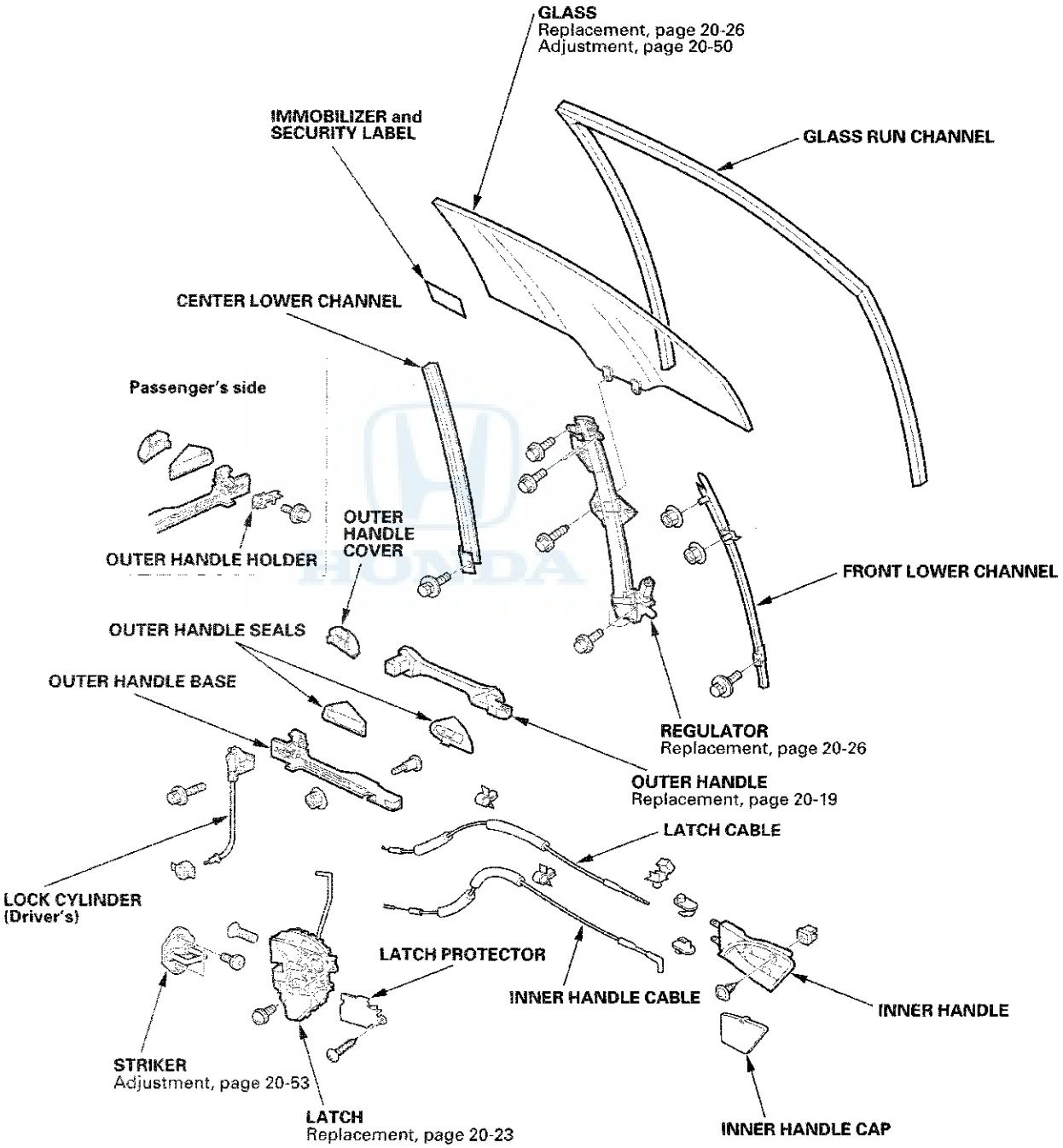
GLASS
Replacement, page 20-26
Adjustment, page 20-50
IMMOBILIZER and SECURITY LABEL
GLASS RUN CHANNEL
CENTER LOWER CHANNEL
Passenger's side
OUTER HANDLE HOLDER
OUTER HANDLE COVER
FRONT LOWER CHANNEL
OUTER HANDLE SEALS
OUTER HANDLE BASE
REGULATOR
Replacement, page 20-26
OUTER HANDLE
Replacement, page 20-19
LATCH CABLE
LOCK CYLINDER (Driver's)
LATCH PROTECTOR
INNER HANDLE CABLE
INNER HANDLE
STRIKER
Adjustment, page 20-53
LATCH
Replacement, page 20-23
INNER HANDLE CAP

Component Location Index (cont'd)

4-door Front Door

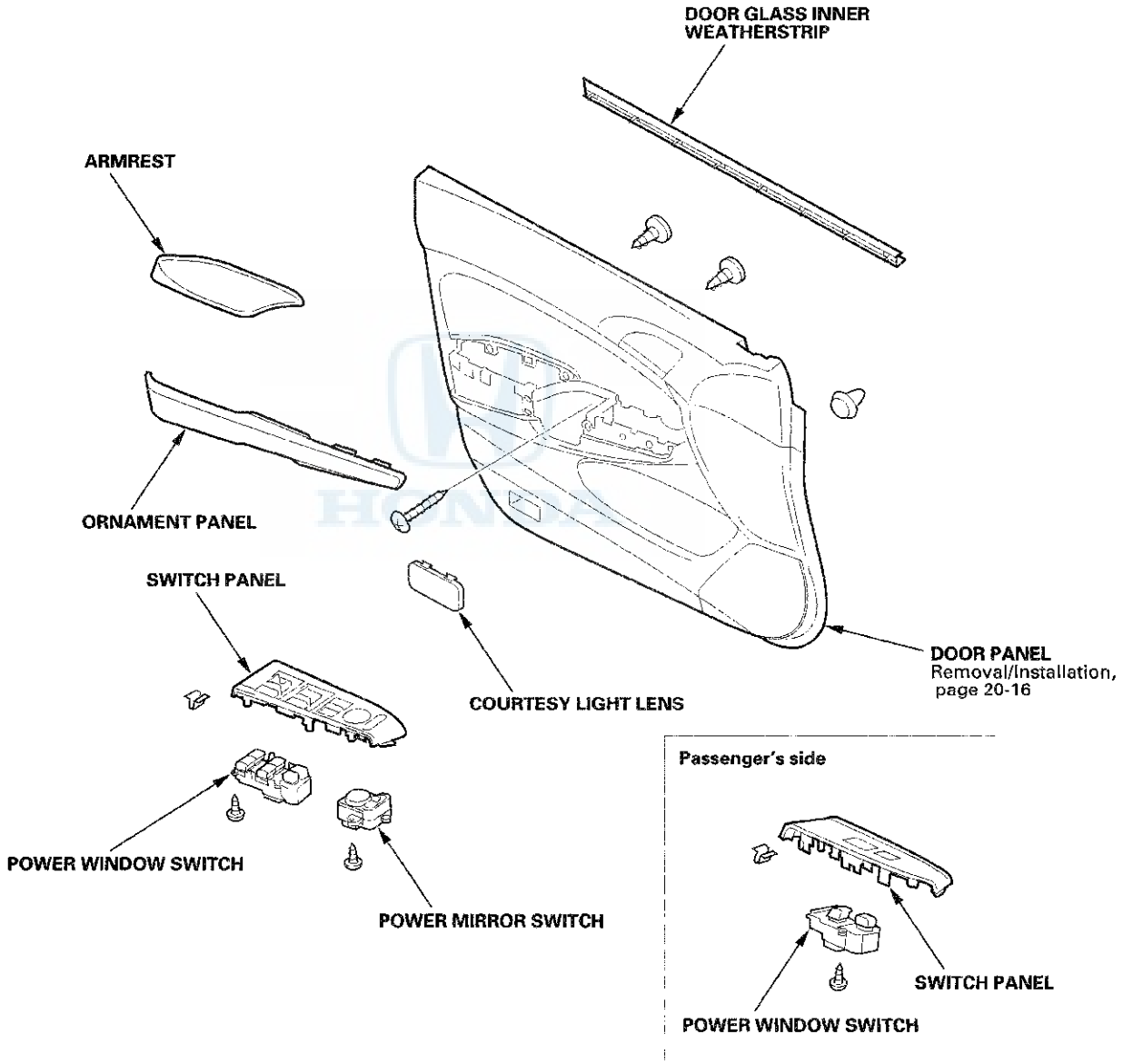

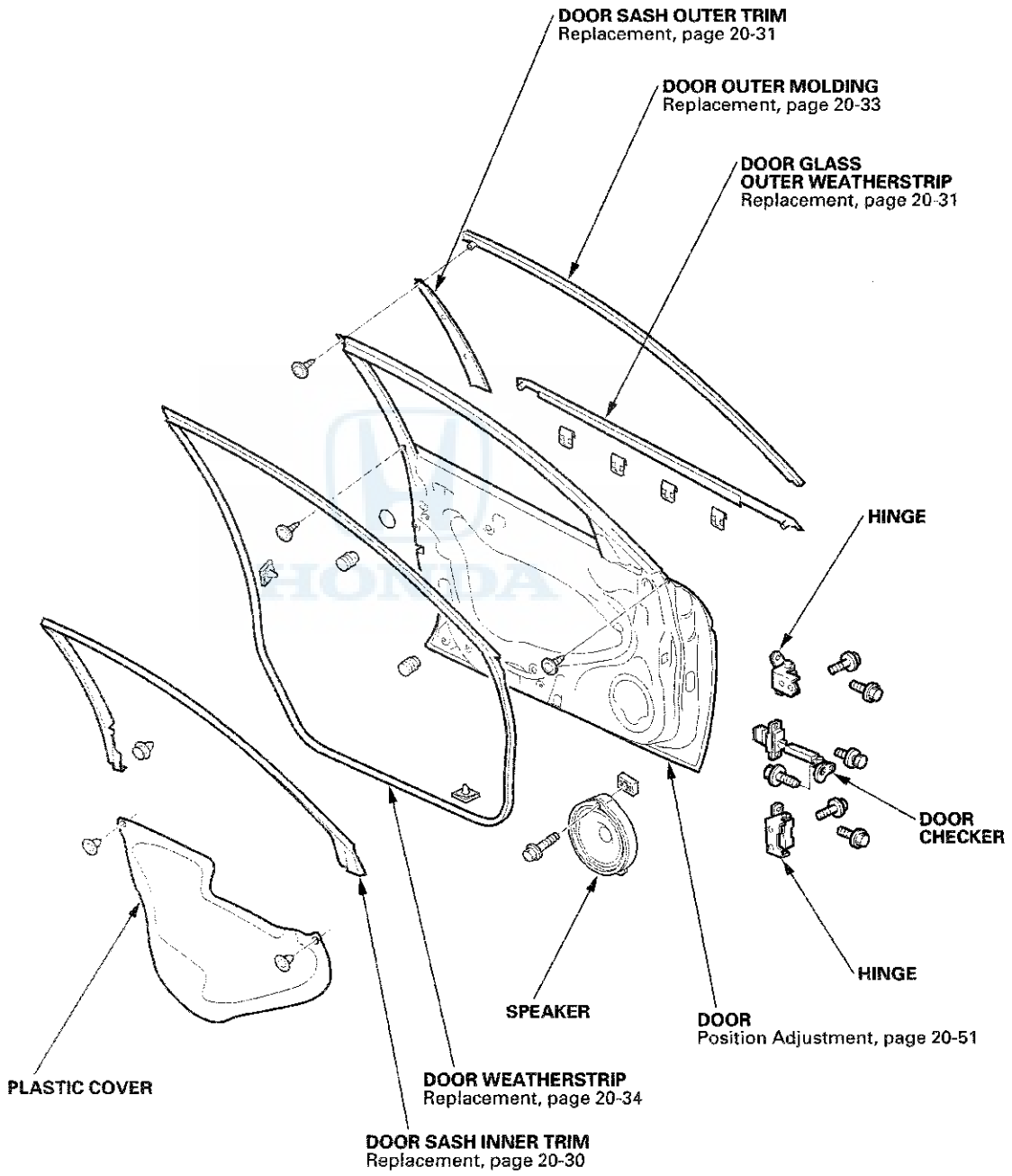
DOOR SASH OUTER TRIM
Replacement, page 20-31
DOOR OUTER MOLDING
Replacement, page 20-33
DOOR GLASS
OUTER WEATHERSTRIP
Replacement, page 20-31
HINGE
DOOR
CHECKER
HINGE
SPEAKER
DOOR
Position Adjustment, page 20-51
PLASTIC COVER
DOOR WEATHERSTRIP
Replacement, page 20-34
DOOR SASH INNER TRIM
Replacement, page 20-30

(cont'd)

Component Location Index (cont'd)

4-door Front Door (cont'd)

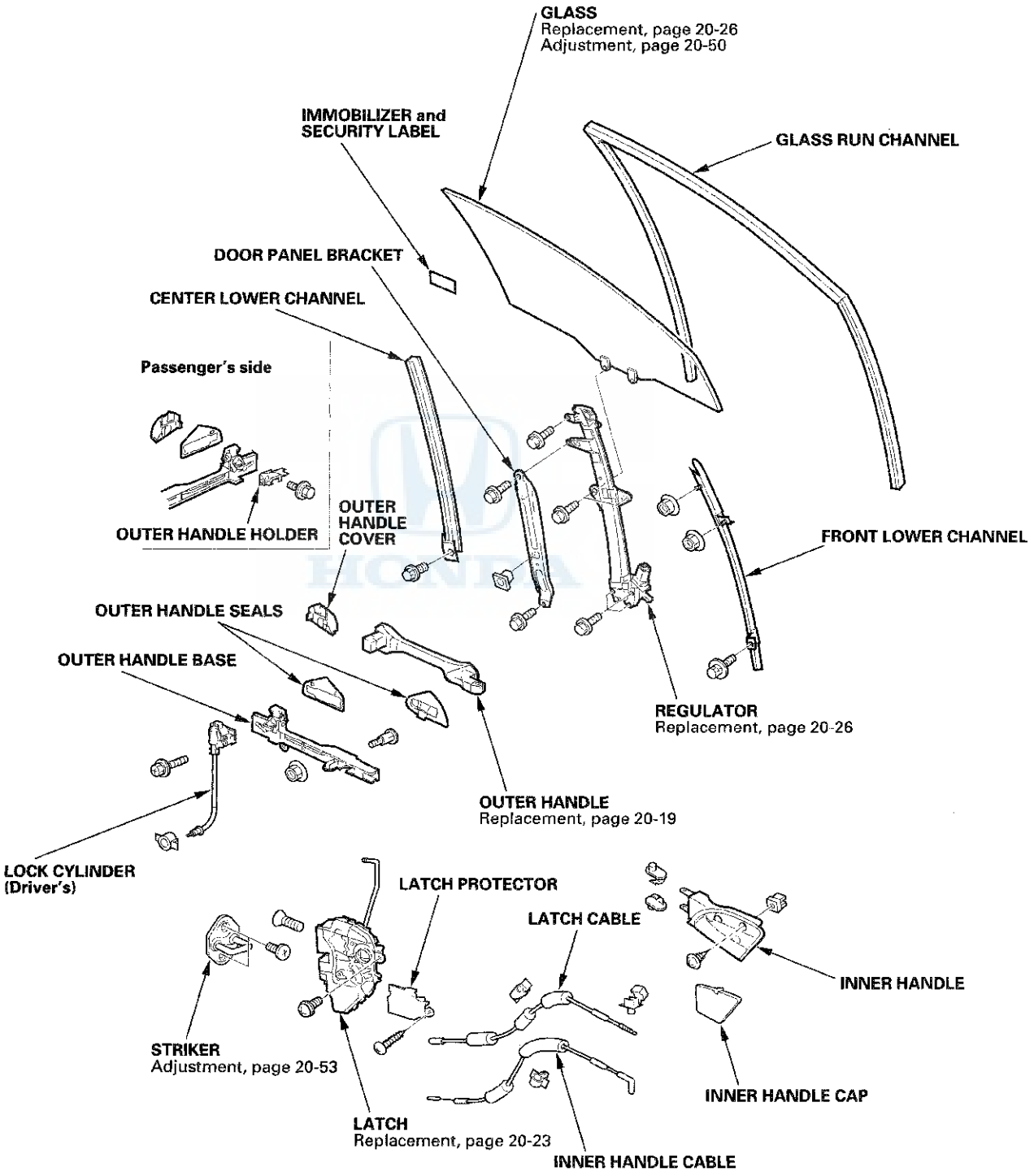

4-door Rear Door

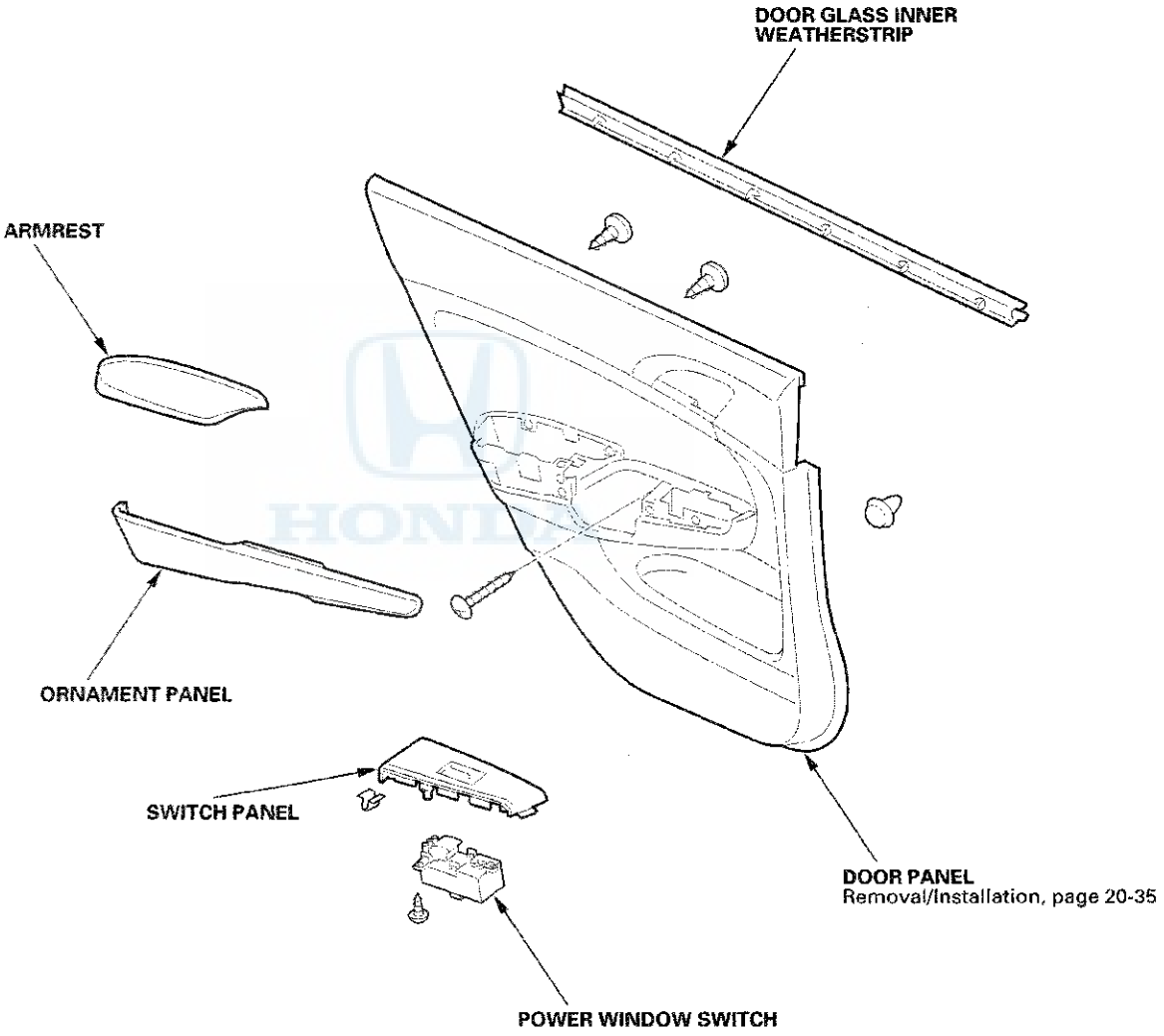

(cont'd)

Component Location Index (cont'd)

4-door Rear Door (cont'd)

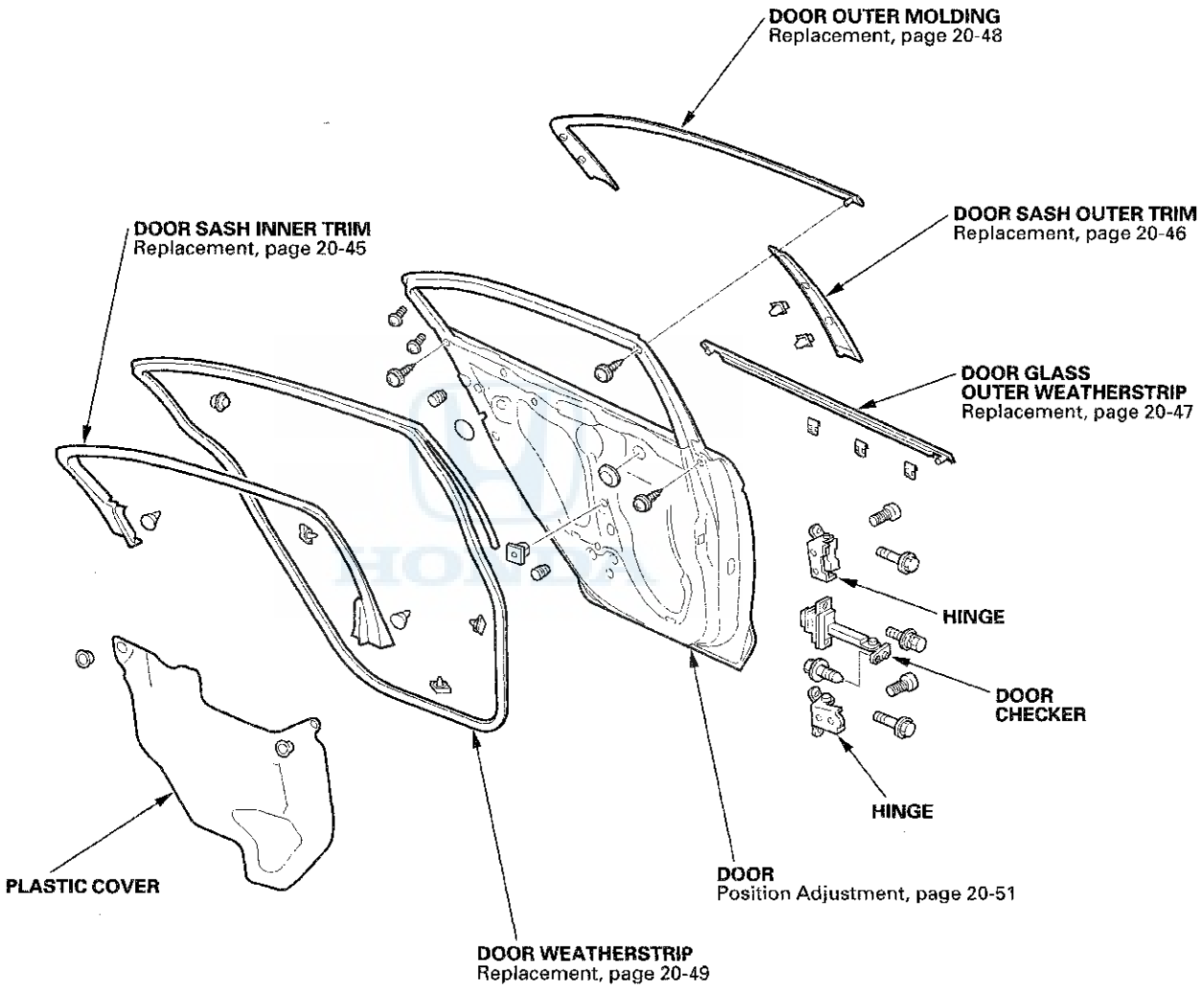

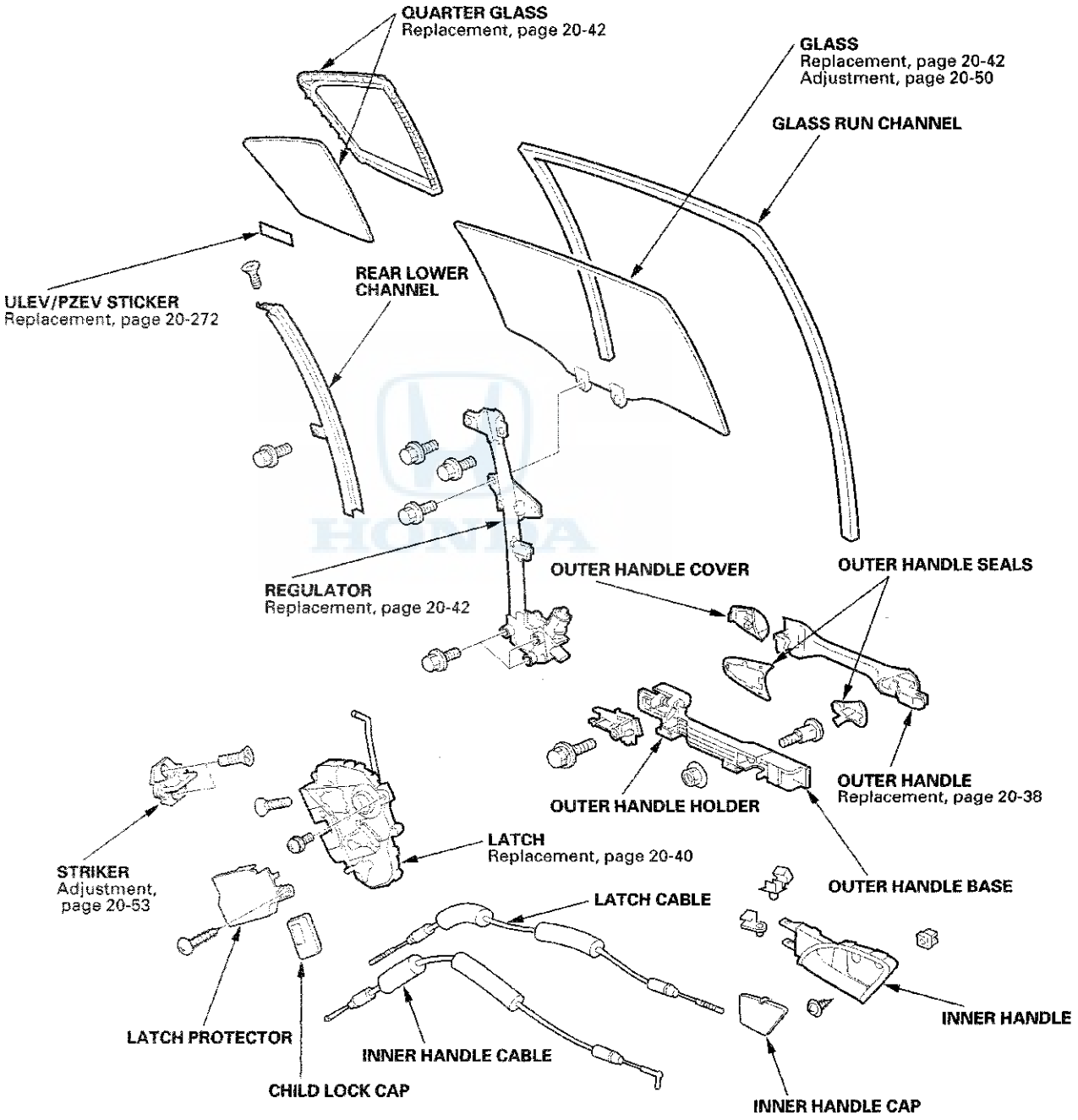
QUARTER GLASS
Replacement, page 20-42
GLASS
Replacement, page 20-42
Adjustment, page 20-50
GLASS RUN CHANNEL
ULEV/PZEV STICKER
Replacement, page 20-272
REAR LOWER CHANNEL
REGULATOR
Replacement, page 20-42
OUTER HANDLE COVER
OUTER HANDLE SEALS
OUTER HANDLE
Replacement, page 20-38
OUTER HANDLE HOLDER
OUTER HANDLE BASE
LATCH
Replacement, page 20-40
STRIKER
Adjustment, page 20-53
LATCH CABLE
INNER HANDLE
LATCH PROTECTOR
INNER HANDLE CABLE
CHILD LOCK CAP
INNER HANDLE CAP

Front Door Panel Removal/Installation

Special Tools Required
- KTC trim tool set SOJATP2014 *
- Trim pad remover, Snap-on A 177A or equivalent, commercially available

* Available through the Honda Tool and Equipment Program; call 888-424-6857

2-door

NOTE:
- Take care not to scratch the door and related parts.
- Use the appropriate tool from the KTC trim tool set to avoid damage when removing components.

1. Remove the tweeter cover (see page 20-55).

2. Raise the glass fully.

3. Push on the bottom of the inner handle cap (A) while pushing on the upper hook (B) with the appropriate trim tool, then pull back the cap to remove it.

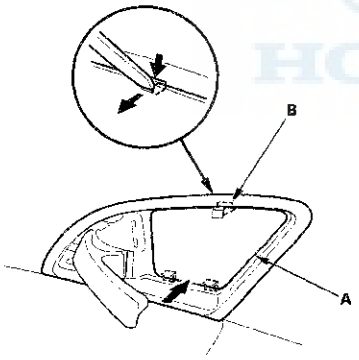

4. Remove the screws (A, B) securing the inner handle (C).

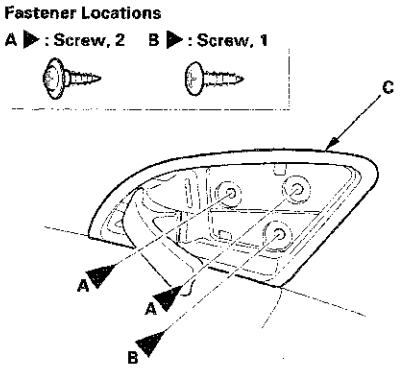

5. Remove the front pull pocket cap (A), and remove the screw.

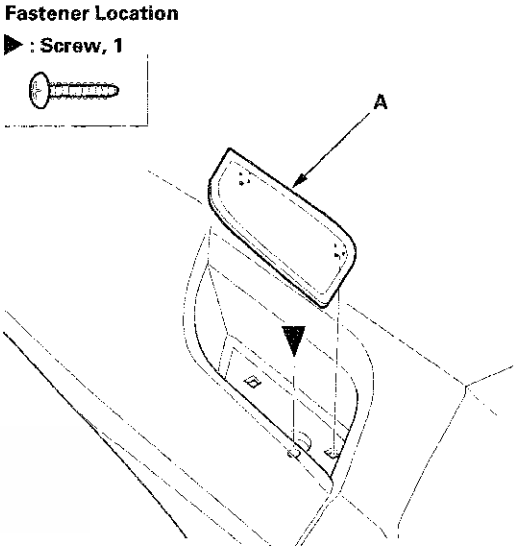

6. Pry up the notch (A) of the front door panel cap (B), then pull back the cap to detach the hooks (C), and release the hooks (D), then remove the cap.

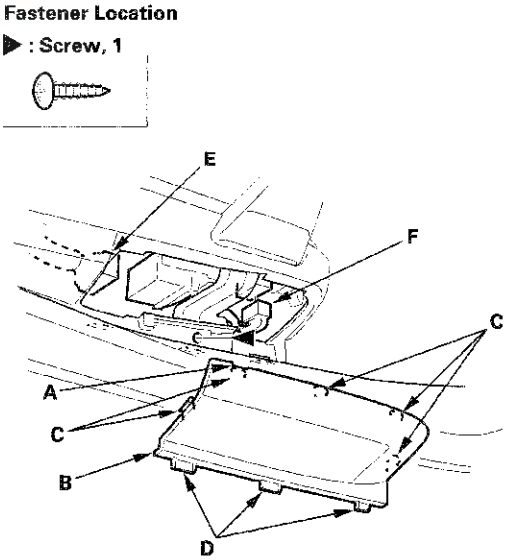

7. Remove the screw, and disconnect the power window switch connector (E) and the power mirror switch connector (F).

8. Remove the door panel (A) with as little bending as possible to avoid creasing or breaking it.

   -1 Start at the bottom edge of the door panel, release the clips with a commercially available trim pad remover.
   -2 Detach the upper clips.
   -3 Starting at the rear, pull the door panel upward.

   NOTE: The inner handle cable (B) and the latch cable (C) are connected to the inner handle (D). Do not pull the door panel up too far, or these cables will be damaged.

Fastener Locations

▷ : Clip, 10 (Gray)

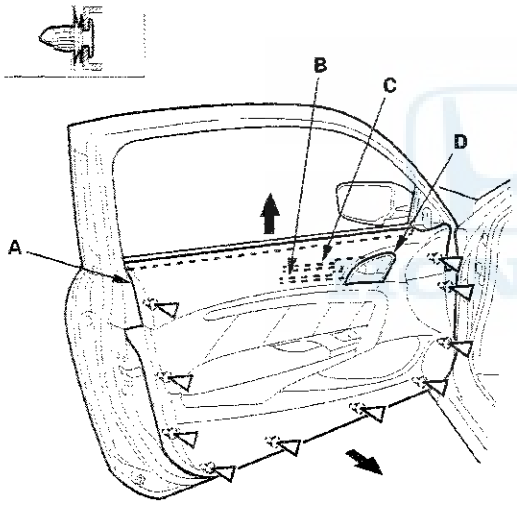

9. While holding the door panel (A) away from the door, remove the inner handle (B) from the door panel by releasing the hooks (C).

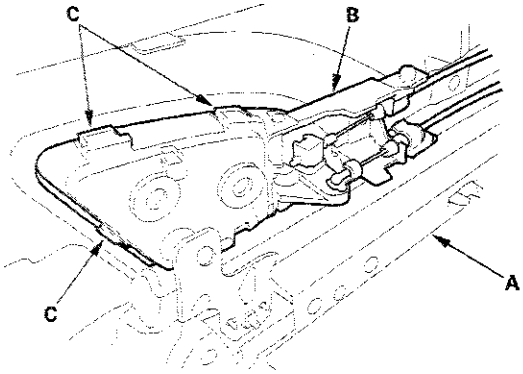

10. Remove the door panel (A) while pulling the inner handle (B) out through the hole in the door panel.

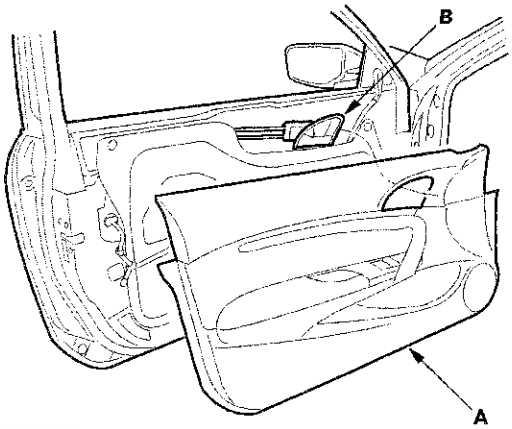

11. Disconnect the inner handle cable (A) and the latch cable (B) from the inner handle (C), then remove the handle.

   -1 Detach the inner handle cable fasteners (D, E), then disconnect the inner handle cable from the cable fasteners.
   -2 Detach the latch cable fastener (F), and remove the latch cable fastener (G) from the inner handle by pinching its tabs out.

   NOTE: If the cable fasteners are damaged or stress-whitened, replace them with new ones.

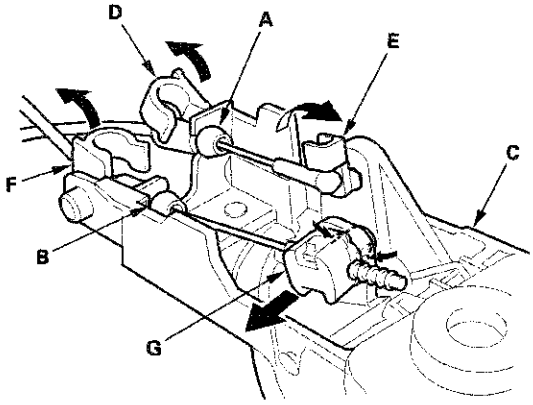

(cont'd)

Front Door Panel Removal/Installation (cont'd)

12. Remove the ornament panel (A).

    -1 Remove the screws from back of the door panel (B).
    -2 Release the hooks (C) from back of the door panel.
    -3 Detach the hooks (D) and the clips from the grip base (E).

Fastener Locations

▶ : Screw, 4 ▷ : Clip, 3

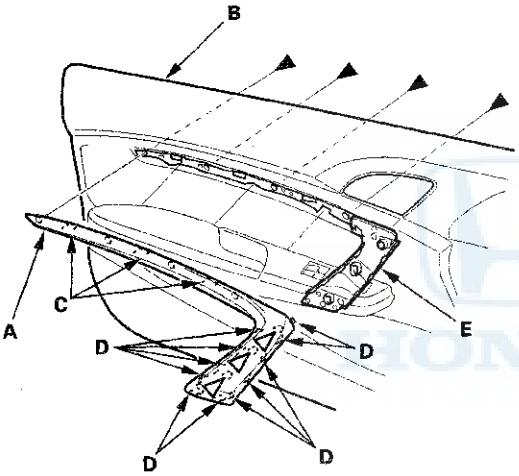

13. Remove the screws (A, B, C), then remove the grip base (D) and the upper grip bracket (E) from the door panel (F).

Fastener Locations

A ▶ : Screw, 2 B ▶ : Scerw, 3 C ▶ : Screw, 1

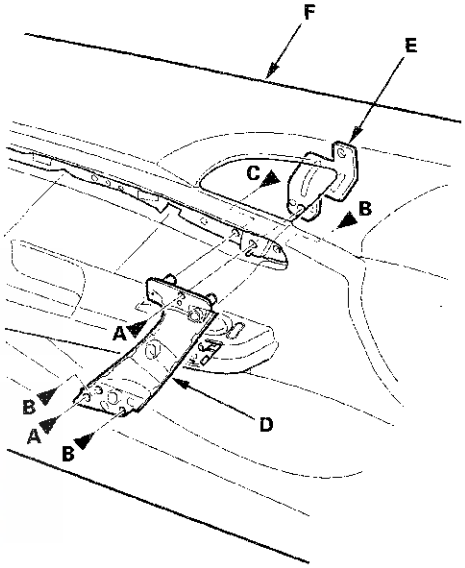

14. Remove the switch panel (A) and the armrest (B) as an assembly from the door panel (C).

    -1 Remove the screws from back of the door panel.
    -2 Pull out along the edge of the armrest to release all of the hooks (D).
    -3 Pull out along the edge of the switch panel to release the hooks (E) and to detach the clips.

Fastener Locations

▶ : Screw, 7 ▷ : Clip, 3

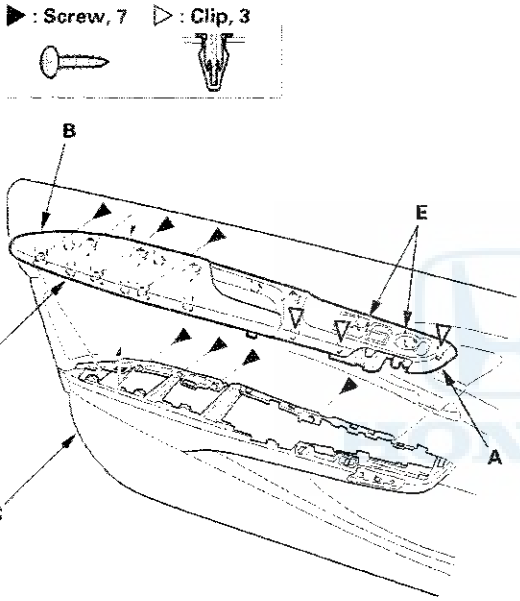

15. Remove the screws, and release the hook (A), then separate the switch panel (B) and the armrest (C).

Fastener Locations

▶ : Screw, 3

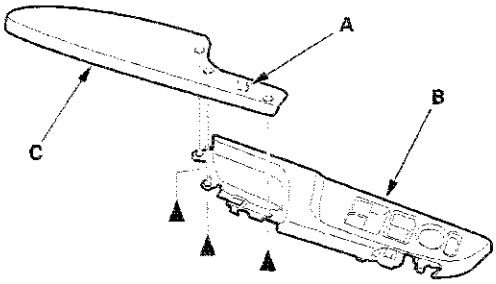

16. Install the door panel in the reverse order of removal, and note these items:

- If the clips are damaged or stress-whitened, replace them with new ones.
- Replace any damaged cable fasteners with new ones.
- The latch cable (A) should be fixed to the cable fastener (B) with the latch in the unlocked position as shown.
- Make sure the connectors are plugged in properly, and the cables are connected securely.
- Make sure the window and power door lock operate properly.
- When reinstalling the door panel, make sure the plastic cover is installed properly and sealed around its outside perimeter to seal out water.

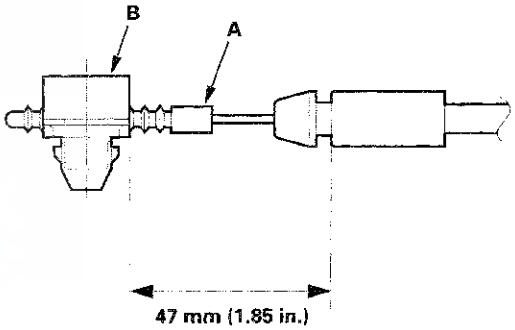

Front Door Panel Removal/Installation (cont'd)

Special Tools Required
- KTC trim tool set SOJATP2014 *
- Trim pad remover, Snap-on A 177A or equivalent, commercially available

* Available through the Honda Tool and Equipment Program; call 888-424-6857

4-door

NOTE:
- Take care not to scratch the door and related parts.
- Use the appropriate tool from the KTC trim tool set to avoid damage when removing components.

1. Remove the tweeter cover (see page 20-55).

2. Raise the glass fully.

3. Push on the bottom of the inner handle cap (A) while pushing on the upper hook (B) with the appropriate trim tool, then pull back the cap to remove it.

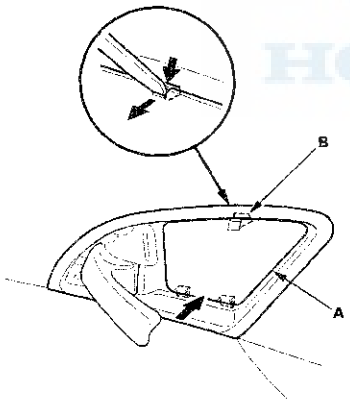

4. Remove the screws securing the inner handle (A).

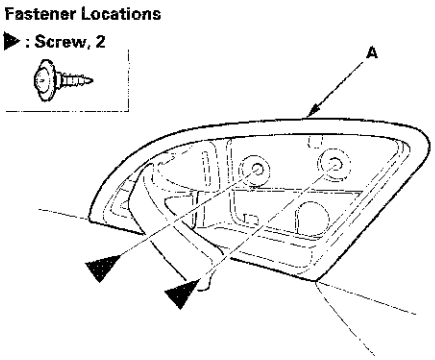

5. Pry up the notch (A) of the lid (B), then pull back the lid, and remove the screw.

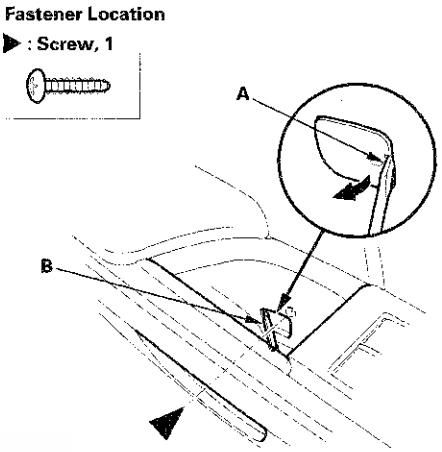

6. Remove the door panel (A) with as little bending as possible to avoid creasing or breaking it.

   -1 Start at the bottom edge of the door panel, release the clips with a commercially available trim pad remover.
   -2 Detach the upper clips.
   -3 Starting at the rear, pull the door panel upward.

   NOTE: The inner handle cable (B) and the latch cable (C) are connected to the inner handle (D). Do not pull the door panel up too far, or these cables will be damaged.

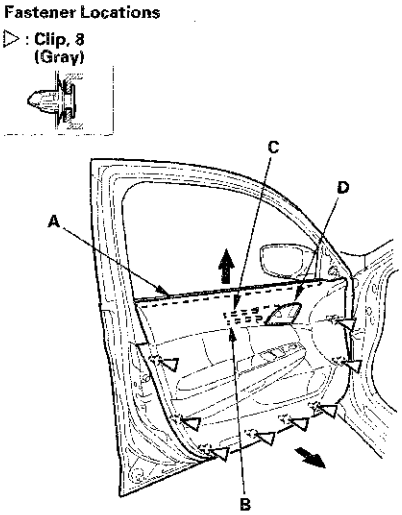

7. While holding the door panel (A) away from the door, remove the inner handle (B) from the door panel by releasing the hooks (C).

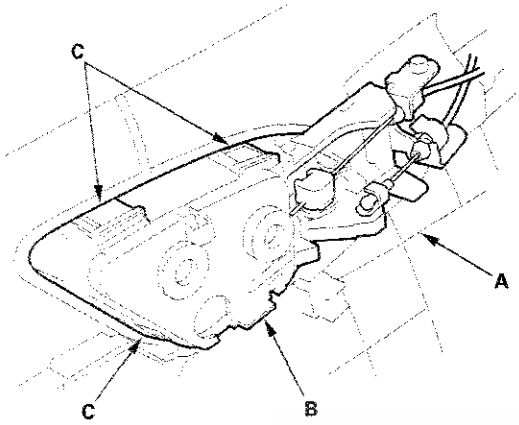

8. Remove the door panel (A) while pulling the inner handle (B) out through the hole in the door panel. While holding the door panel away from the door, disconnect the power window switch connector (C), the power mirror switch connector (D), and the courtesy light bulb socket (E), and detach the harness clip (F).

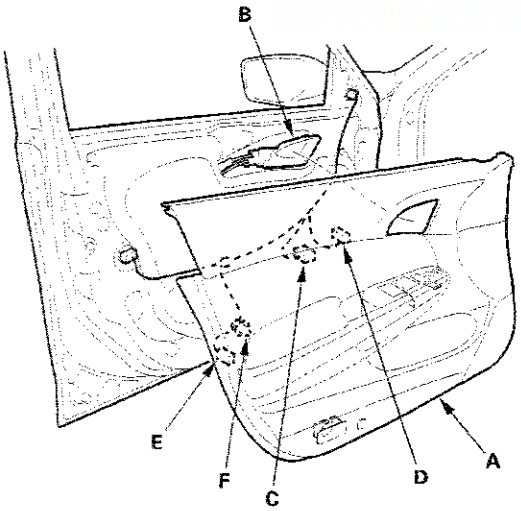

9. Disconnect the inner handle cable (A) and the latch cable (B) from the inner handle (C), then remove the handle.

   -1 Detach the inner handle cable fasteners (D, E), then disconnect the inner handle cable from the cable fasteners.
   -2 Detach the latch cable fastener (F), and remove the latch cable fastener (G) from the inner handle by pinching its tabs out.

   NOTE: If the cable fasteners are damaged or stress-whitened, replace them with new ones.

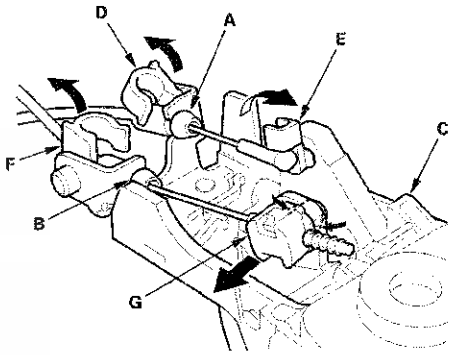

10. Remove the switch panel (A) from the door panel (B).

   -1 Detach the rear clip.
   -2 Pull out along the edge of the panel to release all of the hooks (C).
   -3 Pull the switch panel rearward to release the front hook (D).

Fastener Location

▷ : **Clip, 1**

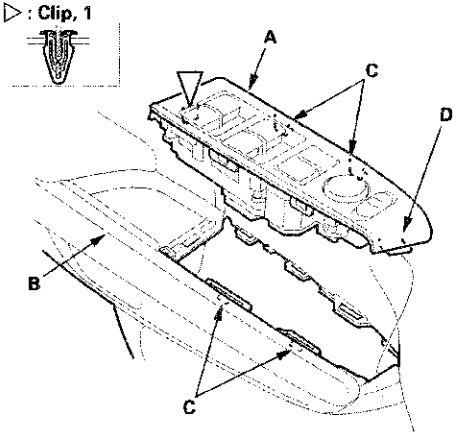

(cont'd)

Front Door Panel Removal/Installation (cont'd)

11. Remove and loosen the screws from back of the door panel (A), and release the hook (B), then remove the armrest (C).

Fastener Locations

▶ : **Screw, 5**

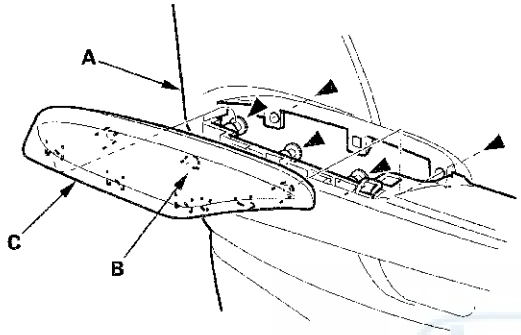

12. Remove the screws from back of the door panel (A), and release the hooks (B, C, D), then remove the ornament panel (E).

Fastener Locations

▶ : **Screw, 6**

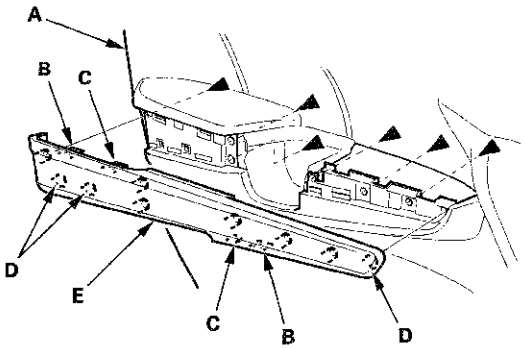

13. Install the door panel in the reverse order of removal, and note these items:

- If the clips are damaged or stress-whitened, replace them with new ones.
- Replace any damaged cable fasteners with new ones.
- The latch cable (A) should be fixed to the cable fastener (B) with the latch in the unlocked position as shown.
- Make sure the connectors are plugged in properly, and the cables are connected securely.
- Make sure the window and power door lock operate properly.
- When reinstalling the door panel, make sure the plastic cover is installed properly and sealed around its outside perimeter to seal out water.

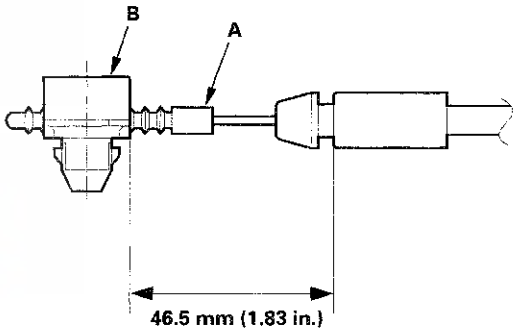

Front Door Outer Handle Replacement

NOTE: Put on gloves to protect your hands.

1. Remove the door panel:
   - 2-door (see page 20-12)
   - 4-door (see page 20-16)

2. Disconnect the power door lock actuator connector (A), and detach the harness clips (B).

2-door

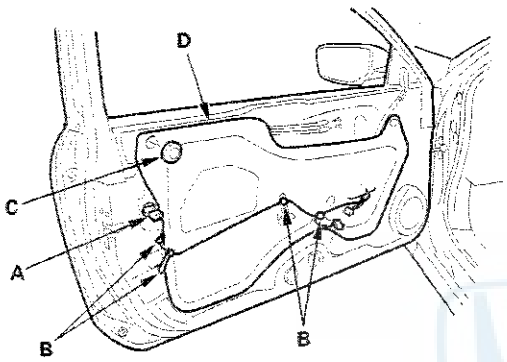

4-door

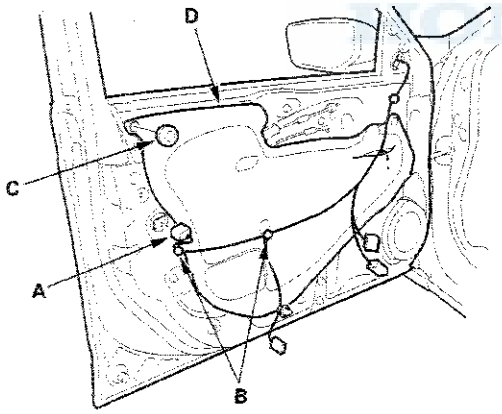

3. Remove the rear plug cap (C), then remove the plastic cover (D) as needed.

NOTE: Remove the glue from the door surface. If the plastic cover is damaged or torn, replace it.

4. Remove the maintenance cap (A) (2-door) or the hole seal (B) (4-door).

2-door

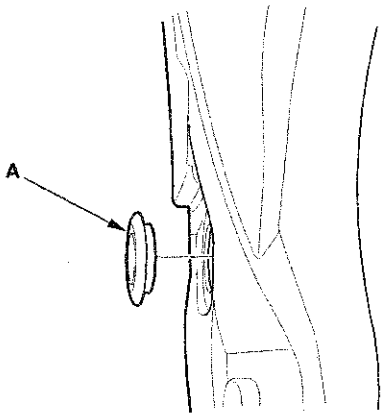

4-door

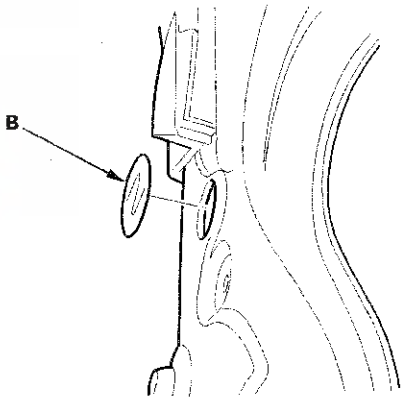

(cont'd)

Front Door Outer Handle Replacement (cont'd)

5. Driver's door: Pull both side flanges (A) of the retainer (B) outward, and pull the middle flange portion (C) of the outer casing cover (D) out, then disconnect the cylinder cable (E) from the latch. 4-door is shown; 2-door is similar.

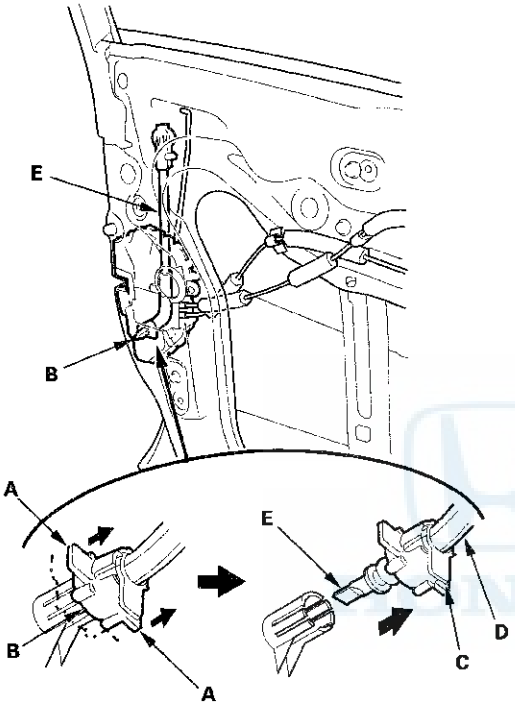

6. 2-door: Pull the glass run channel (A) away as needed, and remove the bolt, then remove the center lower channel (B) by pulling it downward.

Fastener Location

▶ : Bolt, 1

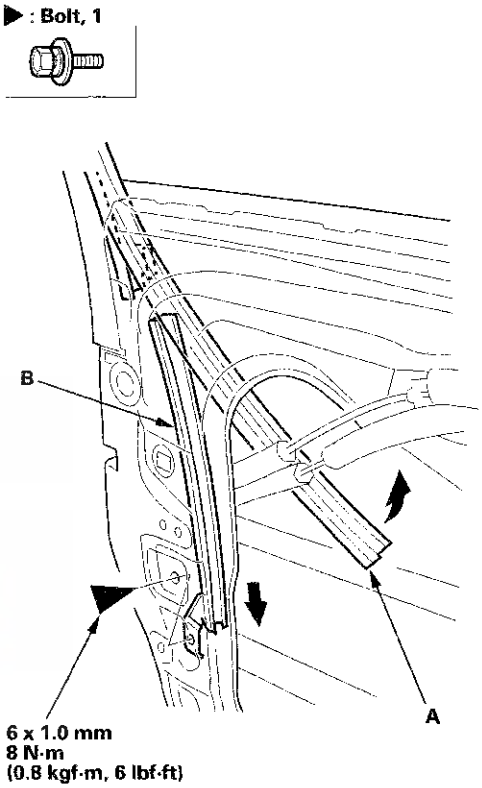

7. While holding the outer handle cover (A) from outside of the door, loosen the bolt (driver's door) until it can be pulled out half-way by hand, or remove the bolt (passenger's door), and then release the hooks (B) of the outer handle cover, then remove the cover.

Driver's door

Fastener Location

▶ : Bolt, 1

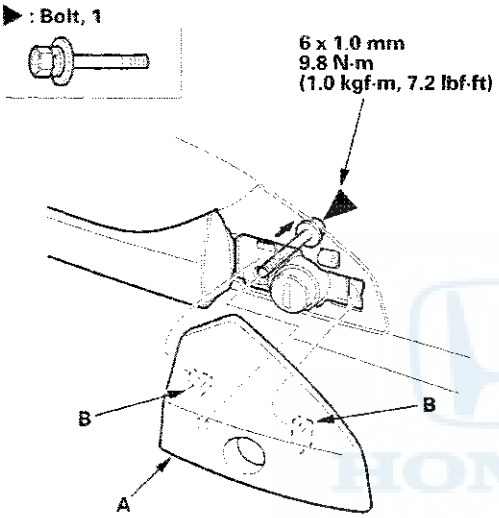

Passenger's door

Fastener Location

▶ : Bolt, 1

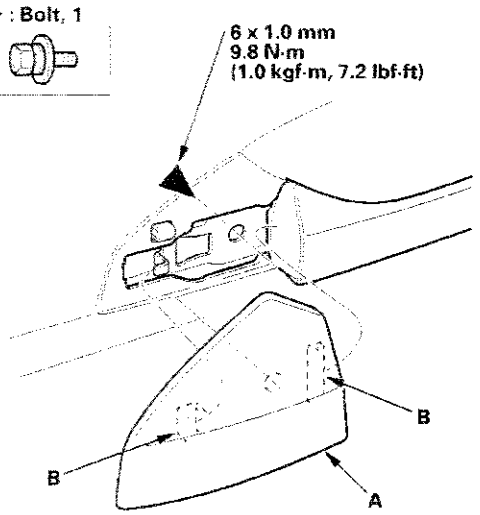

8. Release the hooks (A), then remove the lock cylinder (B) (driver's door) or the outer handle holder (C) (passenger's door) from the outer handle base (D).

Driver's door

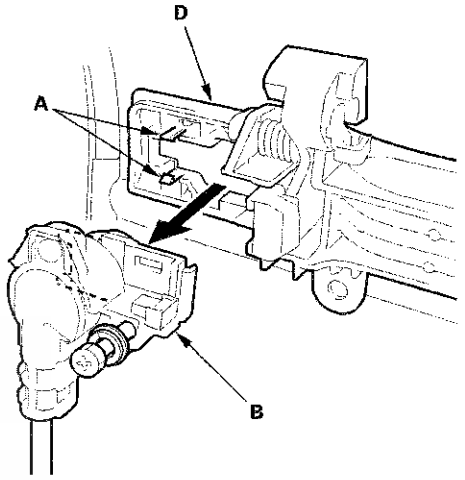

Passenger's door

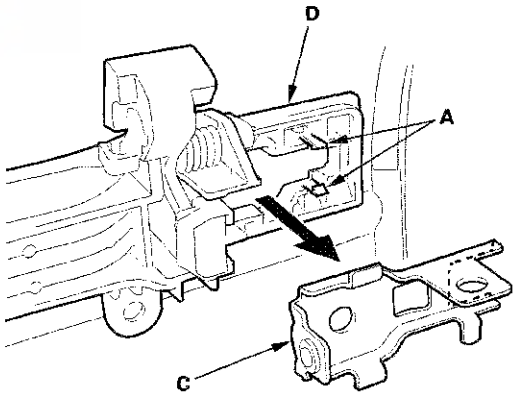

(cont'd)

Front Door Outer Handle Replacement (cont'd)

9. Driver's door: If the retainer (A) of the lock cylinder cable (B) is damaged, release the hooks (C), then replace it.

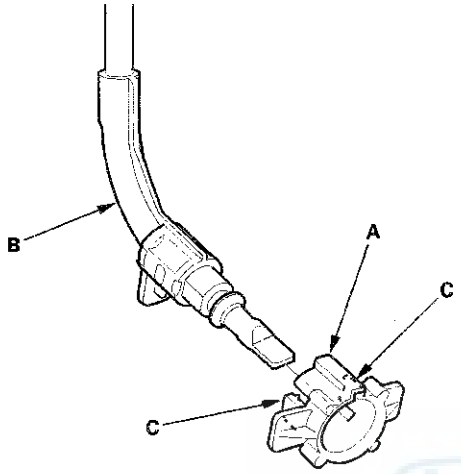

10. Pull the outer handle (A) back, and out as shown to remove it from the door. Take care not to scratch the door.

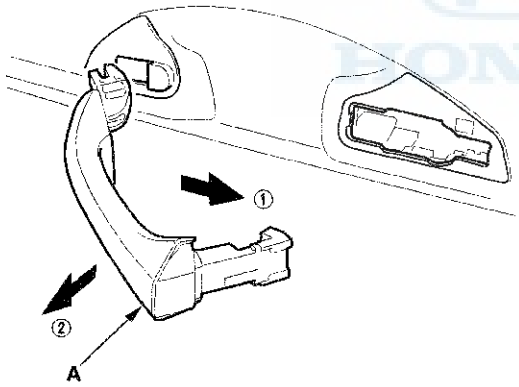

11. Release the hooks (A, B), then remove the outer handle front seal (C) and the outer handle rear seal (D).

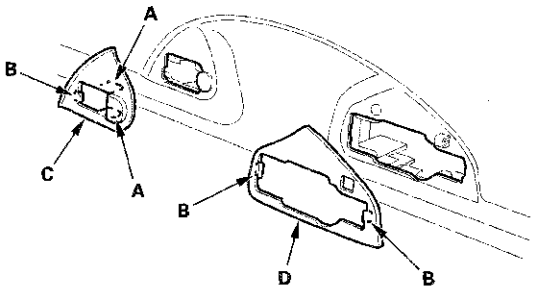

12. Remove the outer handle base (A).

   -1 Detach the rod fastener (B).
   -2 With a clip remover, disconnect the outer handle rod (C).
   -3 Loosen the nut.
   -4 Release the hook (D), and slide the outer handle base forward to release the special bolt (E) from the door panel.

Fastener Location

● : Nut, 1

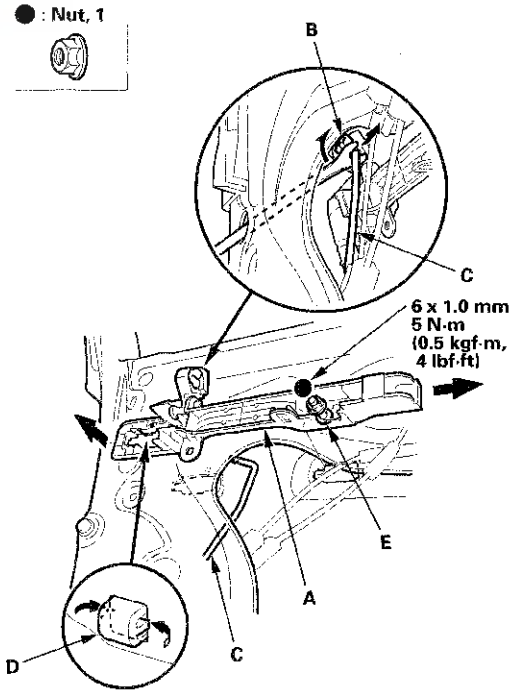

13. Remove the rod fastener (A) from the outer handle base (B), then replace it with a new one.

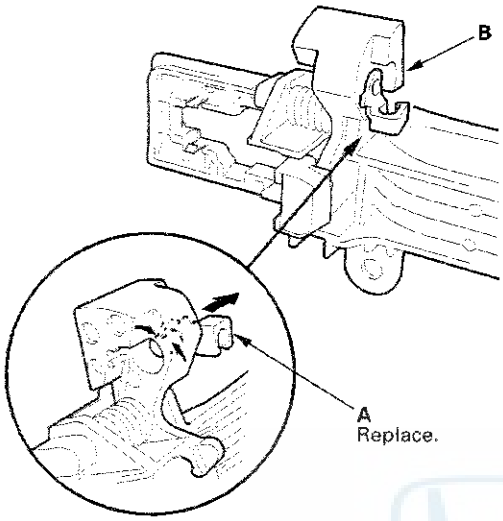

14. Install the handle in the reverse order of removal, and note these items:

- Reinstall the lock cylinder (driver's door) or the outer handle holder (passenger's door) before installing the outer handle cover.
- Make sure that the actuator connector is plugged in properly, and that the cylinder cable and the outer handle rod are connected securely.
- Make sure the door key cylinder/door locks operate properly.
- Make sure the door handle works properly.
- When reinstalling the door panel, make sure the plastic cover is installed properly and sealed around its outside perimeter to seal out water.

Front Door Latch Replacement

NOTE: Put on gloves to protect your hands.

1. Remove the door panel and the inner handle:

   - 2-door (see page 20-12)
   - 4-door (see page 20-16)

2. Remove the plastic cover, as needed (see step 2 on page 20-19).

3. Detach the rod fastener, and disconnect the outer handle rod from the outer handle base (see step 12 on page 20-22).

4. Driver's door: Disconnect the cylinder cable from the latch (see step 5 on page 20-20).

5. 2-door: Pull the glass run channel away as needed, and remove the bolt, then remove the center lower channel by pulling it downward (see step 6 on page 20-20).

6. 4-door: Pull the glass run channel (A) away as needed, and remove the bolt, then remove the center lower channel (B) by pulling it downward.

Fastener Location

▶ : Bolt, 1

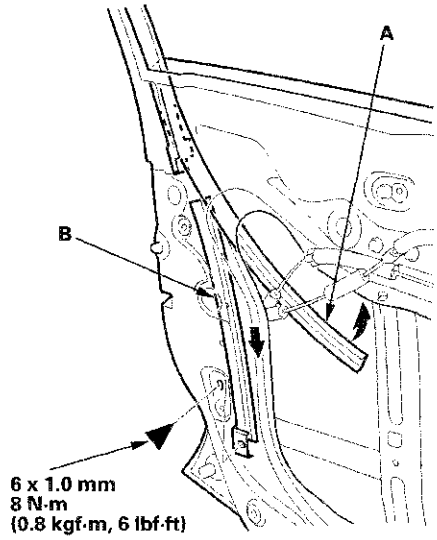

(cont'd)

Front Door Latch Replacement (cont'd)

7. Detach the cable clips (A). Remove the screws (B, C) securing the latch (D), then remove the latch through the hole in the door. Take care not to bend the outer handle rod (E), the latch cable (F), and the inner handle cable (G).

2-door

Fastener Locations

B ▶ : Screw, 3 C ▶ : Screw, 1

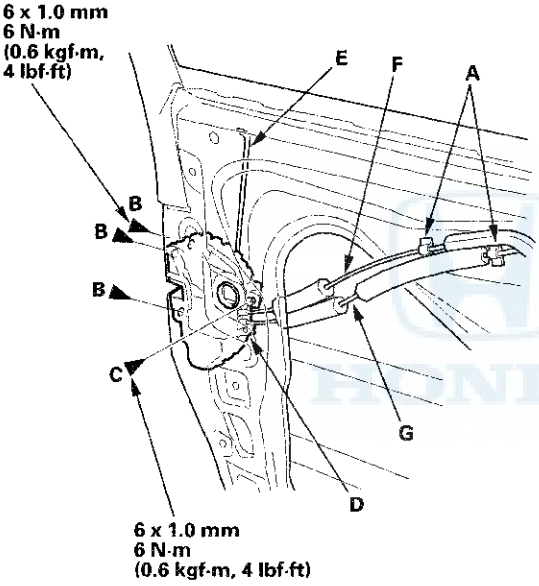

4-door

Fastener Locations

B ▶ : Screw, 3 C ▶ : Screw, 1

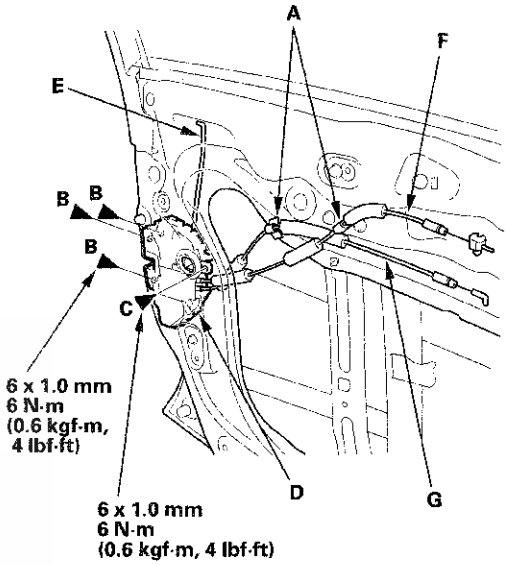

8. Remove the sponge seal (A), and remove the screw, then remove the latch protector (B) by releasing the hook (C), and remove the sponge seal (D) from the latch.

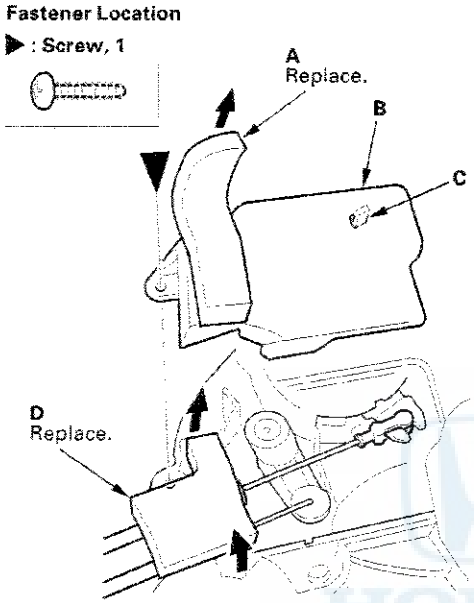

9. Disconnect the latch cable (A) and the inner handle cable (B) from the latch (C), and remove the sponge seals (D, E).

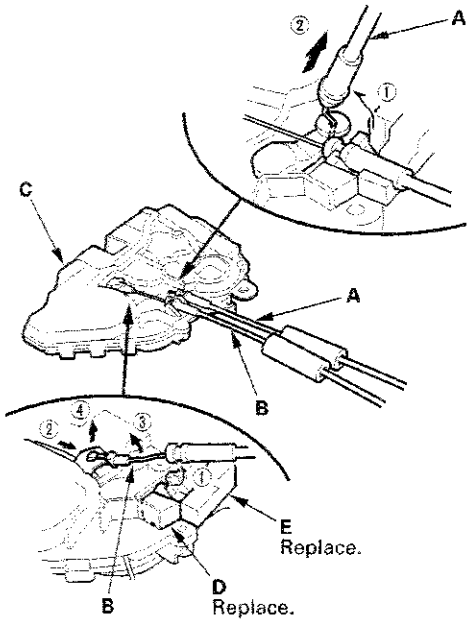

10. Install the latch in the reverse order of removal, and note these items:

- Before reinstalling the cables to the latch (A), clean the latch surface where the new sponge seals will be attached with isopropyl alcohol, and attach the new sponge seals (B, C) to the latch as shown.
- After reinstalling the latch cable (D) and the outer handle cable (E) to the latch, attach the new sponge seal (F) to the cable connecting portions on the latch as shown.
- Before reinstalling the latch protector (G), replace the inside sponge seal (H) and the outside sponge seal (I) with new ones:
  - Scrape off the old sponge seals from the protector, and clean the protector surfaces with isopropyl alcohol.
  - Attach the new inside sponge seal to the inside face of the protector as shown.
  - After reinstalling the latch protector to the latch, attach the new outside sponge seal to the protector and the latch as shown.
- Make sure that the actuator connector is plugged in properly, and that the cylinder cable and the outer handle rod are connected securely.
- Make sure the door locks and opens properly.
- When reinstalling the door panel, make sure the plastic cover is installed properly and sealed around its outside perimeter to seal out water.

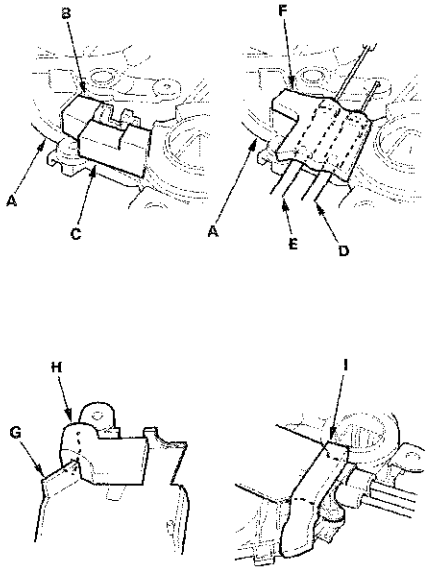

Front Door Glass and Regulator Replacement

NOTE: Put on gloves to protect your hands.

1. Remove the door panel:
   - 2-door (see page 20-12)
   - 4-door (see page 20-16)

2. 2-door: Remove the screws, then remove the door panel bracket (A).

Fastener Locations

▶ : Screw, 2

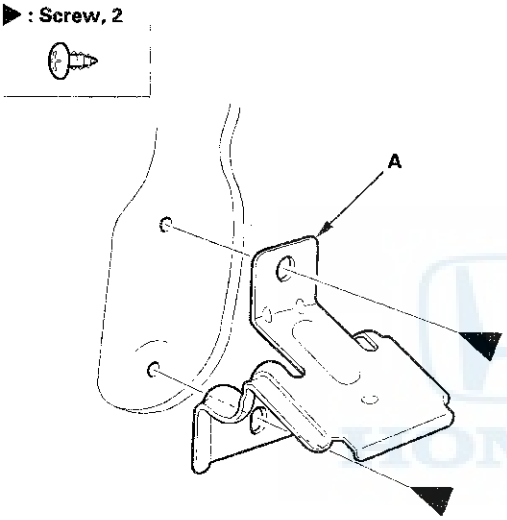

3. Disconnect the power door lock actuator connector (A), and detach the harness clips (B). Remove the plug caps (C). 4-door: Disconnect the power mirror connector (D).

2-door

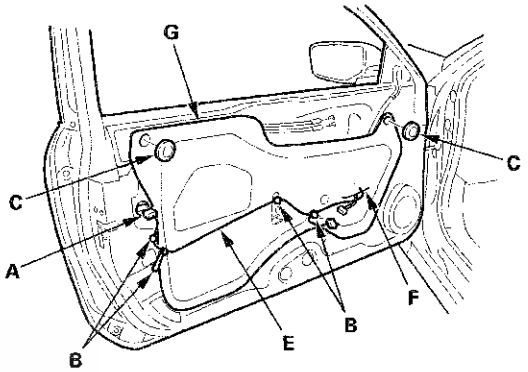

4-door

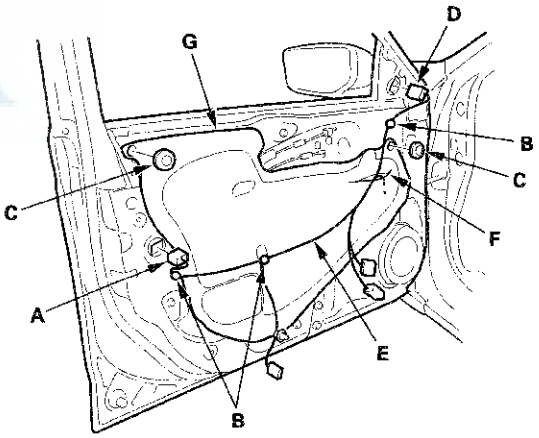

4. Pass the wire harness (E) through the slit (F) in the plastic cover (G), then remove the plastic cover.

NOTE: Remove the glue from the door surface. If the plastic cover is damaged or torn, replace it.

5. 4-door: Remove the bolts, and release the hook (A), then remove the door panel bracket (B).

Fastener Locations

▶ : Bolt, 2

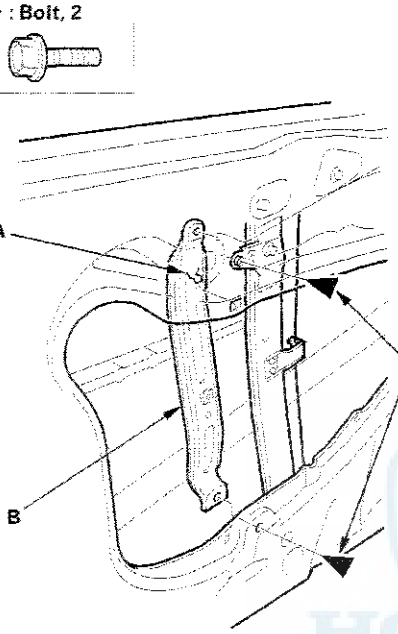

6. Carefully raise the glass (A) until you can see the bolts, then remove them. Carefully pull the glass out through the window slot. Take care not to drop the glass inside the door.

2-door

Fastener Locations

▶ : Bolt, 2

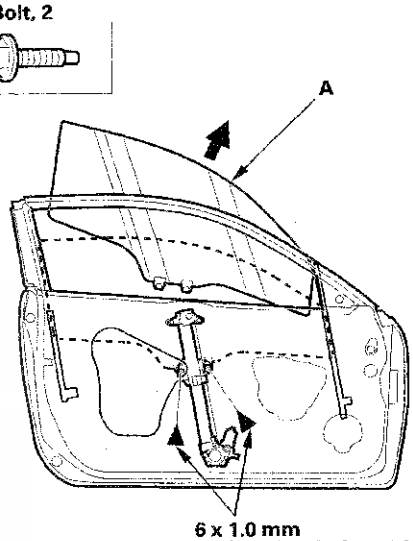

4-door

Fastener Locations

▶ : Bolt, 2

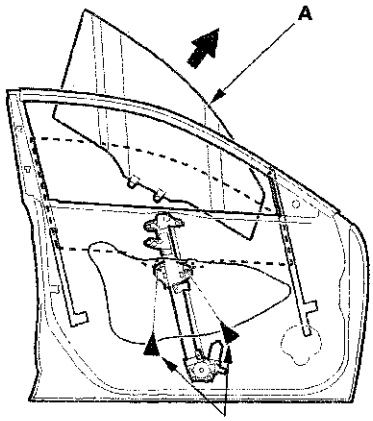

(cont'd)

Front Door Glass and Regulator Replacement (cont'd)

7. Disconnect the connector (A) from the regulator (B).

2-door

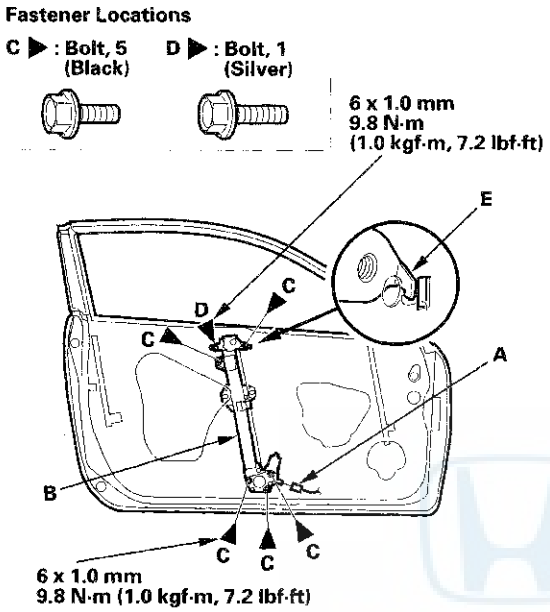

4-door

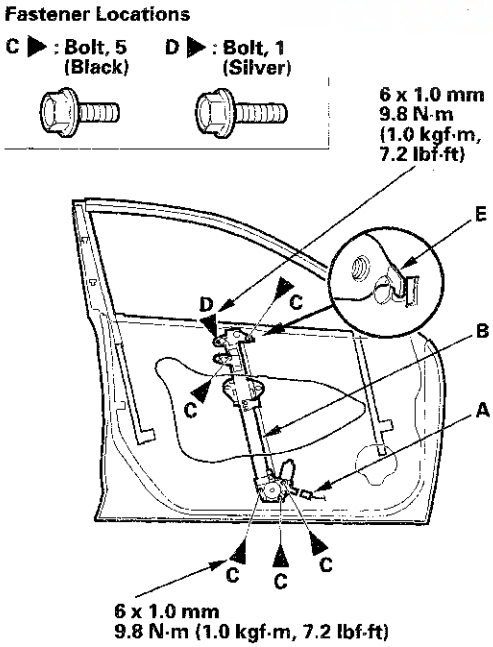

8. Remove the bolts (C), and loosen the bolts (D). Release the hook (E), then remove the regulator through the hole in the door.

9. Apply multipurpose grease to all the sliding surfaces of the regulator (A) where shown. 4-door is shown; 2-door is similar.

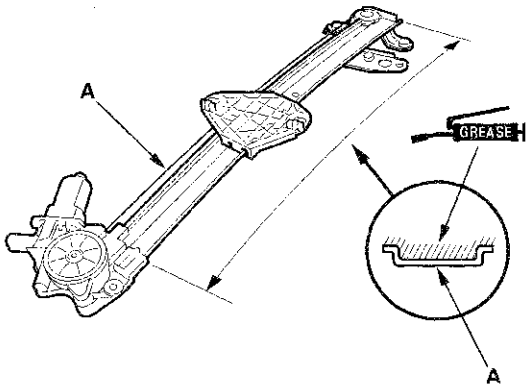

10. Install the glass and regulator in the reverse order of removal, and note these items:

- Roll the glass up and down to see if it moves freely without binding.
- Make sure that there is no clearance between the glass and glass run channel when the glass is closed.
- Adjust the position of the glass as necessary (see page 20-50).
- Do the power window control unit reset procedure (see page 22-251).
- When reinstalling the door panel, make sure the plastic cover is installed properly and sealed around its outside perimeter to seal out water.
- Check for water leaks (see step 9 on page 20-51).
- Test-drive and check for wind noise and rattles.
- Make sure the power door locks, windows and power mirror operate properly.

Front Door Sash Inner Trim Replacement

2-door

NOTE: Take care not to scratch the door.

1. Remove the door panel (see page 20-12).

2. Lower the glass fully.

3. Remove the door sash inner trim (A).

   -1 Detach the clips fastening the trim.
   -2 Pull back along the outside edge of the trim to release the hook strip (B) from the door glass opening flange at the A-pillar portion and the roof portion of the door sash.
   -3 Release the hook (C) from the glass run channel (D) at the rear corner portion of the door sash.
   -4 Pull back along the outside edge of the trim to release the hook strip (E) from the door glass opening flange at the B-pillar portion of the door sash.
   -5 Release the rear hook (F) from the door.

Fastener Location

▷ : Clip, 1 (Gray)

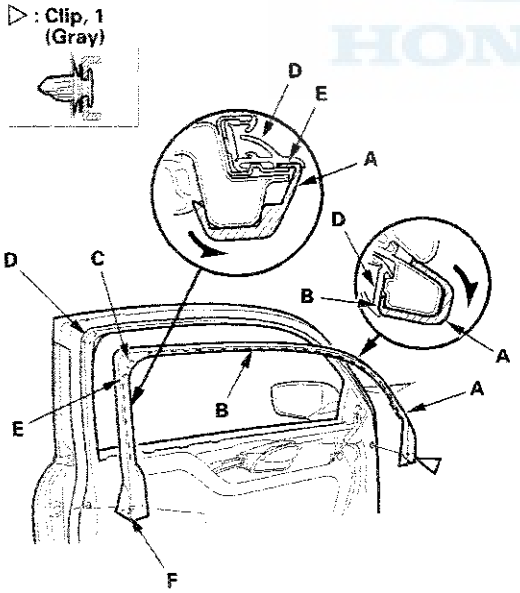

4. Install the trim in the reverse order of removal, and note these items:

   - If the clip is damaged or stress-whitened, replace it with a new one.
   - Push the hooks and the clip into place securely.

Front Door Sash Inner Trim Replacement (cont'd)

4-door

NOTE: Take care not to scratch the door.

1. Remove the door panel (see page 20-16).
2. Lower the glass fully.
3. Remove the front door sash inner trim (A).
   - -1 Detach the clip fastening the trim.
   - -2 Pull back along the outside edge of the trim to release the hooks or the hook strips (B) from the door glass opening flange at the A-pillar portion and the roof portion of the door sash.
   - -3 Release the hook (C) from the glass run channel (D) at the rear corner portion of the door sash.
   - -4 Pull back along the outside edge of the trim to release the hooks or the hook strips (E) from the door glass opening flange at the B-pillar portion of the door sash.
   - -5 Release the rear hook (F) from the door.

Japan-produced models

Fastener Location

▷ : Clip, 1 (Gray)

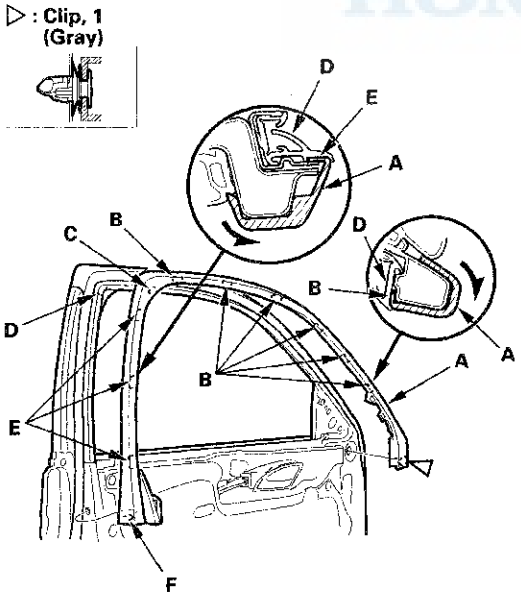

USA-produced models

Fastener Location

▷ : Clip, 1 (Gray)

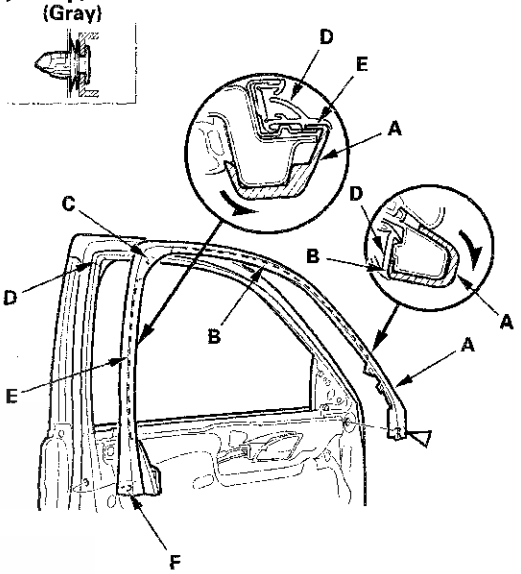

4. Install the trim in the reverse order of removal, and note these items:
   - If the clip is damaged or stress-whitened, replace it with a new one.
   - Push the hooks and the clip into place securely.

Front Door Sash Outer Trim Replacement

NOTE:
- Take care not to scratch the door.
- 4-door is shown; 2-door is similar.

1. Remove the door outer molding (see page 20-33).

2. Pull the door sash outer trim (A) up to release the hooks (B) from the door, and release the trim from between the door glass outer weatherstrip (C) and the door, then remove the trim. Take care not to damage the door glass outer weatherstrip.

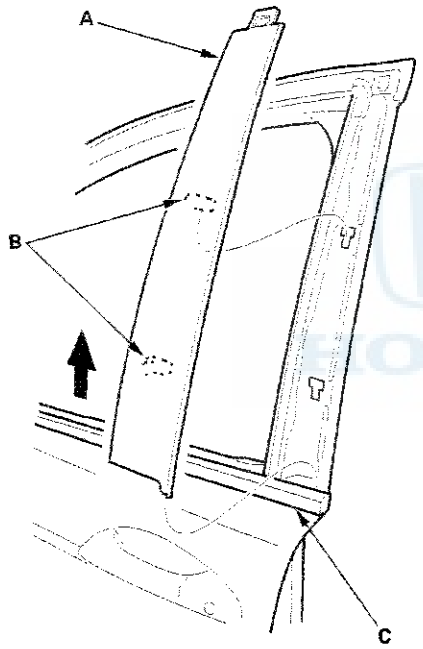

3. Install the trim in the reverse order of removal.

Front Door Glass Outer Weatherstrip Replacement

NOTE:
- Put on gloves to protect your hands.
- Take care not to scratch the door.

1. Remove these items:

   - Door panel
     - 2-door (see page 20-12)
     - 4-door (see page 20-16)
   - Plastic cover, as needed (see step 2 on page 20-19)
   - Power mirror (see page 20-55)

2. Raise the glass fully.

3. Remove the screws from the front and rear edges of the door.

Fastener Locations

▶ : Screw, 2

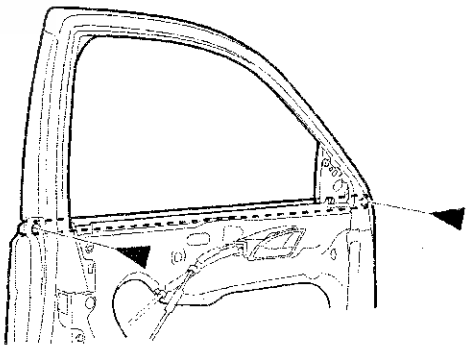

(cont'd)

Front Door Glass Outer Weatherstrip Replacement (cont'd)

4. From the inside of the door, slide the clips (A) of the door glass outer weatherstrip (B) to release the hooks (C) from the flanges (D) of the door panel.

2-door

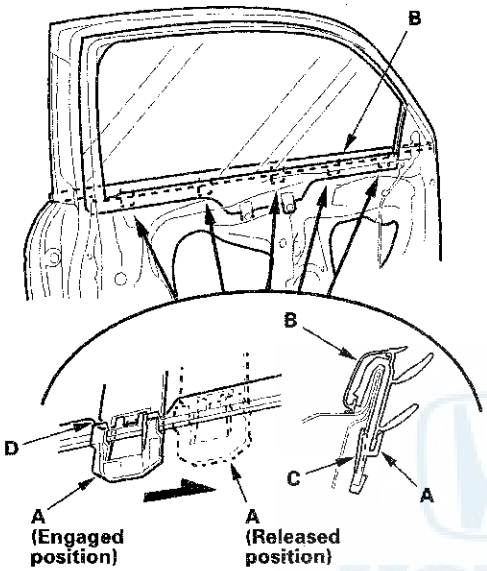

4-door

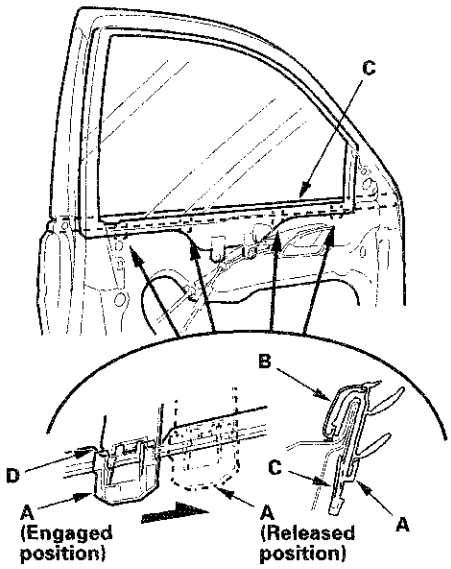

5. Pull up the door glass outer weatherstrip (A), then remove it.

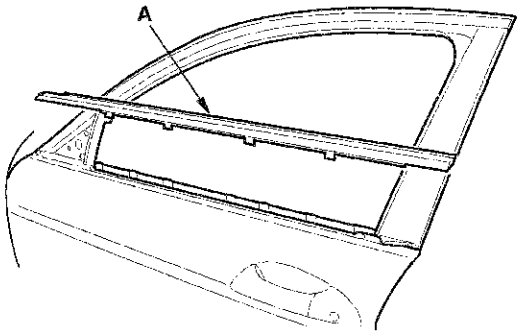

6. If the clips are damaged or stress-whitened, replace them with new ones.

7. Before installing the door glass outer weatherstrip, align the clips of the weatherstrip to the flanges where the clips should be engaged by sliding them.

8. Push the clip portions of the front door glass outer weatherstrip into place securely.

Front Door Outer Molding Replacement

Special Tools Required
KTC trim tool set SOJATP2014 *
* Available through the Honda Tool and Equipment Program; call 888-424-6857

NOTE:
- If you remove the door outer molding, replace it with a new one because it will bend during removal.
- Put on gloves to protect your hands.
- Take care not to scratch the door.
- Use the appropriate tool from the KTC trim tool set to avoid damage when removing components.
- 4-door is shown; 2-door is similar.

1. Remove the power mirror (see page 20-55).

2. Using a clip remover, detach the clip, then pull back the door weatherstrip (A), and remove the screw.

Fastener Locations

▷ :Clip, 1 (Black) ▶ : Screw, 1

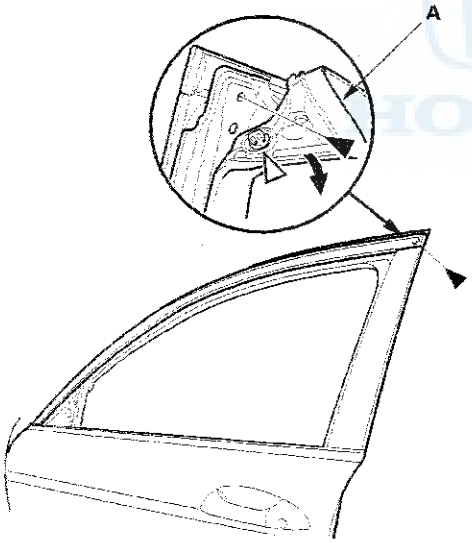

3. While removing the upper edge of the door outer molding (A) from the edge of the sash, cut the double-sided adhesive tape (B) with a utility knife, then remove the molding from the sash, and remove the molding from between the door glass outer weatherstrip (C) and the door.

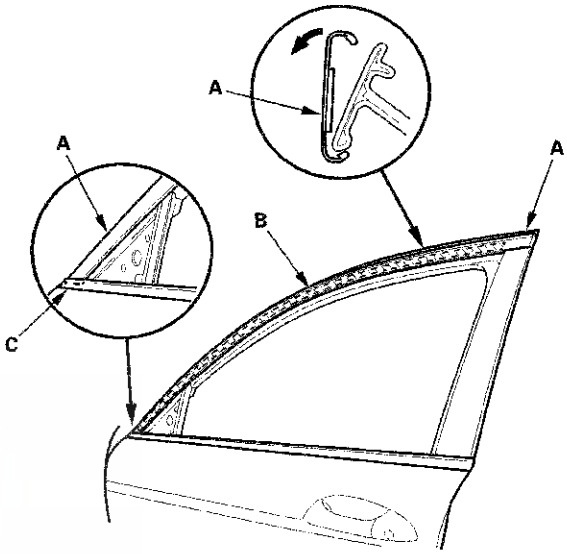

4. Scrape off remaining double-sided adhesive tape from the sash, then clean the sash surface with a shop towel dampened in isopropyl alcohol.

5. Install the new door outer molding in the reverse order of removal, and note these items:

   - Insert the front edge of the molding between the door glass outer weatherstrip and the door properly.
   - Push adhesive portions into place securely.
   - Make sure the upper and lower sides of the molding are catching the edges of the sash properly.
   - Push the door weatherstrip clip into place securely.

Front Door Weatherstrip Replacement

NOTE:
- Put on gloves to protect your hands.
- Take care not to scratch the door.
- Take care not to damage the front upper corner clip (black) (4-door) and the rear upper corner clips (black) in the weatherstrip because these clips are not able to replace with new ones.
- Use a clip remover to remove the clips.

1. At the A-pillar, remove the door checker mounting bolt (A).

2-door

Fastener Locations

A ▶ : Bolt, 1
B ▷ : Clip, 17 (Left: Pink) (Right: Light Blue)
C ▷ : Clip, 5 (White)
D ▷ : Clip, 1 (Black)
E ▷ : Clip, 1 (White)
F ▷ : Clip, 1 (Orange)

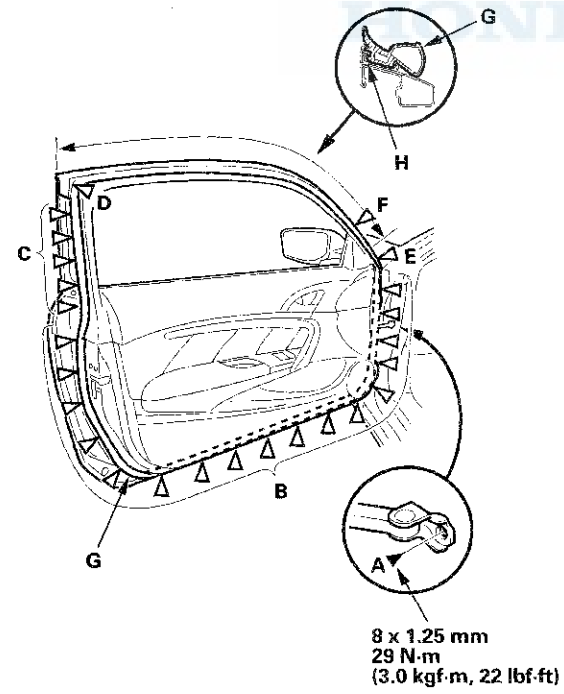

4-door

Fastener Locations

A ▶ : Bolt, 1
B ▷ : Clip, 16 (Left: Orange) (Right: Purple)
C ▷ : Clip, 4 (Gray)
D ▷ : Clip, 2 (Black)

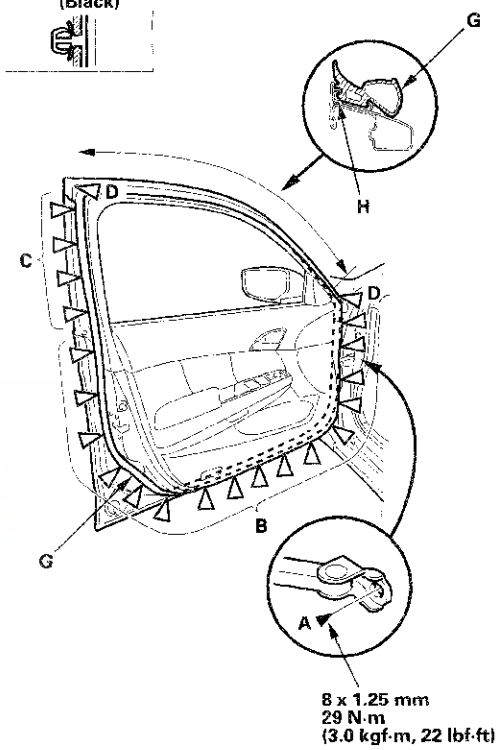

2. Detach the clips (B, C, D, E, F), and release the door weatherstrip (G) from the holder (H) of the door sash, then remove the weatherstrip.

3. Install the weatherstrip in the reverse order of removal, and note these items:

   - If the clips are damaged or stress-whitened, replace them with new ones.
   - Make sure the weatherstrip is installed in the holder securely.
   - Apply medium strength liquid thread lock to the door checker mounting bolt before installation.
   - Check for water leaks (see step 9 on page 20-51).

Rear Door Panel Removal/Installation

Special Tools Required
- KTC trim tool set SOJATP2014 *
- Trim pad remover, Snap-on A 177A or equivalent, commercially available
- * Available through the Honda Tool and Equipment Program; call 888-424-6857

4-door

NOTE:
- Take care not to scratch the door and related parts.
- Use the appropriate tool from the KTC trim tool set to avoid damage when removing components.

1. Raise the glass fully.

2. Push on the bottom of the inner handle cap (A) while pushing on the upper hook (B) with the appropriate trim tool, then pull back the cap to remove it.

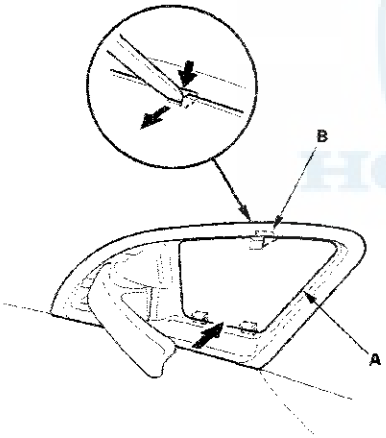

3. Remove the screws securing the inner handle (A).

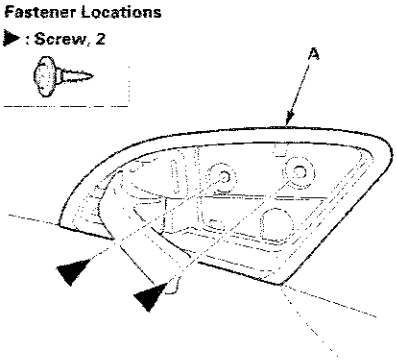

4. Pry up the notch (A) of the lid (B), then pull back the lid, and remove the screw.

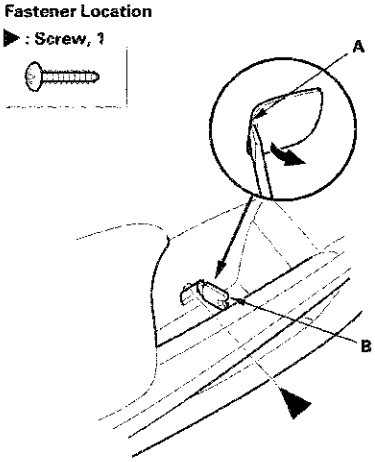

5. Remove the door panel (A) with as little bending as possible to avoid creasing or breaking it.

   -1 Start at the bottom edge of the door panel, release the clips with a commercially available trim pad remover.
   -2 Detach the upper clips.
   -3 Starting at the rear, pull the door panel upward.

   NOTE: The inner handle cable (B) and latch cable (C) are connected to the inner handle (D). Do not pull the door panel up too far, or these cables will be damaged.

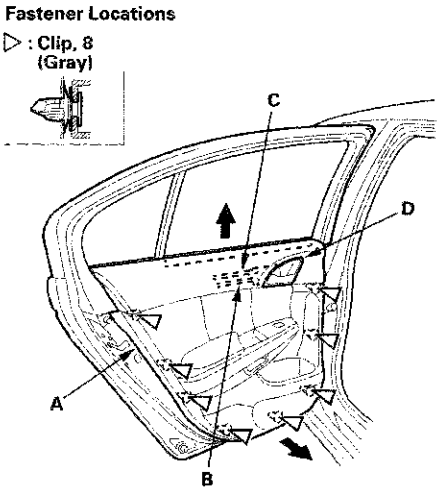

(cont'd)

Rear Door Panel Removal/Installation (cont'd)

6. While holding the door panel (A) away from the door, remove the inner handle (B) from the door panel by releasing the hooks (C).

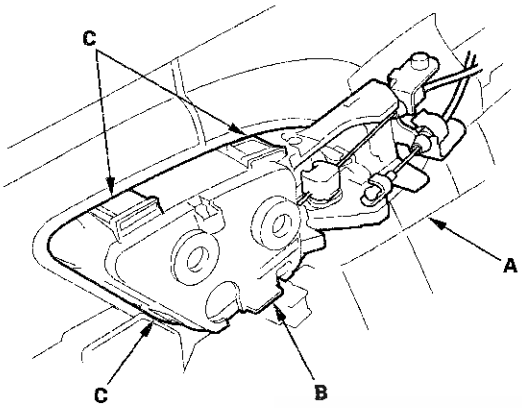

7. Remove the door panel (A) while pulling the inner handle (B) out through the hole in the door panel. While holding the door panel away from the door, disconnect the power window switch connector (C).

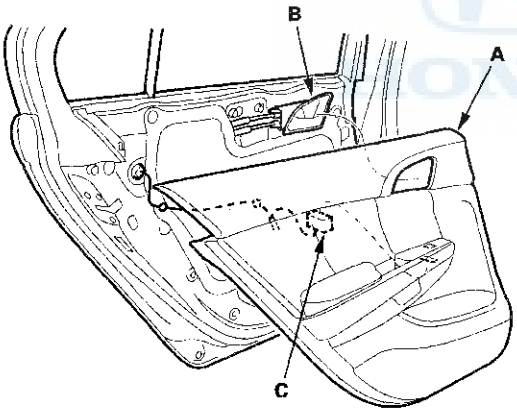

8. Disconnect the inner handle cable (A) and the latch cable (B) from the inner handle (C), then remove the handle.

   -1 Detach the inner handle cable fasteners (D, E), then disconnect the inner handle cable from the cable fasteners.
   -2 Detach the latch cable fastener (F), and remove the latch cable fastener (G) from the inner handle by pinching its tabs out.

   NOTE: If the cable fasteners are damaged or stress-whitened, replace them with new ones.

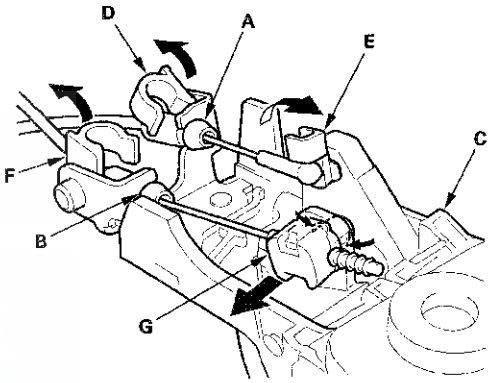

9. Remove the power window switch panel (A) from the door panel (B).

   -1 Detach the rear clip.
   -2 Pull out along the edge of the panel to release all of the hooks (C).
   -3 Pull the switch panel rearward to release the front hook (D).

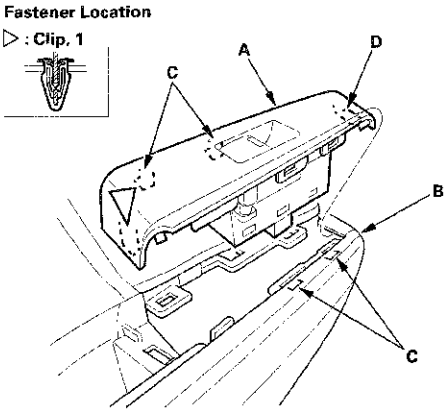

10. Remove and loosen the screws from back of the door panel (A), and release the hook (B), then remove the armrest assembly (C).

Fastener Locations

▶ : Screw, 5

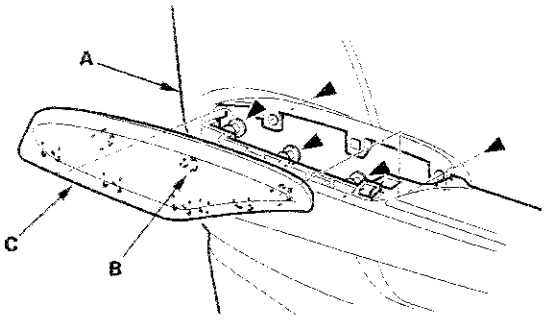

11. Remove the screws from back of the door panel (A), and release the hooks (B, C, D), then remove the ornament panel (E).

Fastener Locations

▶ : Screw, 5

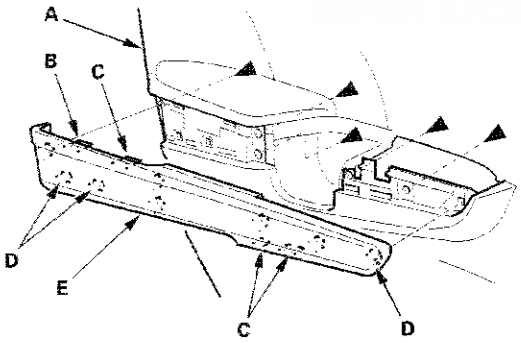

12. Install the door panel in the reverse order of removal, and note these items:

- If the clips are damaged or stress-whitened, replace them with new ones.
- Replace any damaged cable fasteners with new ones.
- The latch cable (A) should be fixed to the cable fastener (B) with the latch in the unlocked position as shown.
- Make sure the connector is plugged in properly, and the cables are connected securely.
- Make sure the window and power door lock operate properly.
- When reinstalling the door panel, make sure the plastic cover is installed properly and sealed around its outside perimeter to seal out water.

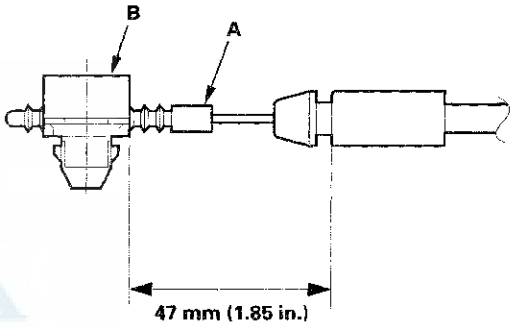

Rear Door Outer Handle Replacement

4-door

NOTE: Put on gloves to protect your hands.

1. Remove the door panel (see page 20-35).

2. Disconnect the power door lock actuator connector (A), and detach the harness clips (B).

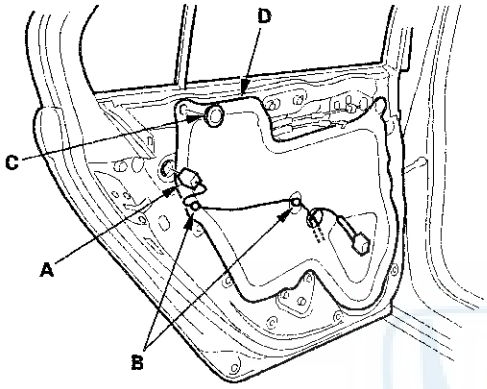

3. Remove the rear plug cap (C), then remove the plastic cover (D) as needed.

NOTE: Remove the glue from the door surface. If the plastic cover is damaged or torn, replace it.

4. Remove the hole seal (A).

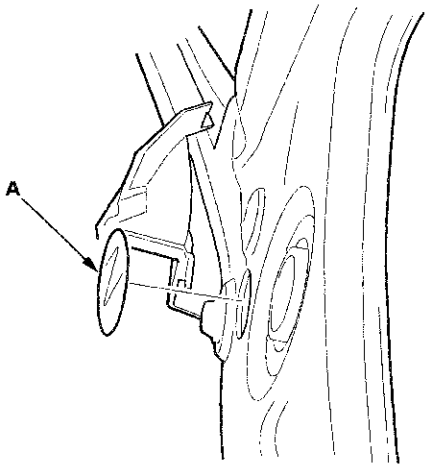

5. While holding the outer handle cover (A) from outside of the door, remove the bolt, and then release the hooks (B) of the outer handle cover, then remove the cover.

Fastener Location

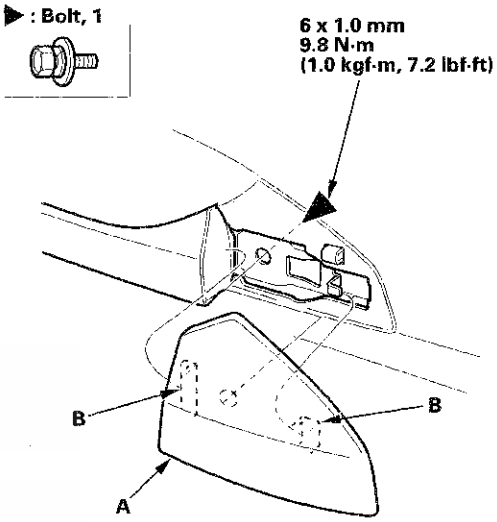

6. Release the hooks (A), then remove the outer handle holder (B) from the outer handle base (C).

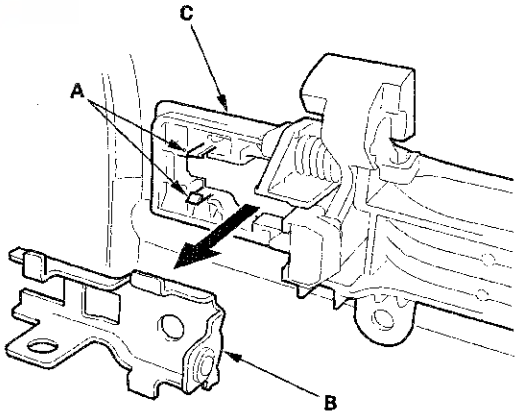

7. Pull the outer handle (A) back, and out as shown to remove it from the door. Take care not to scratch the door.

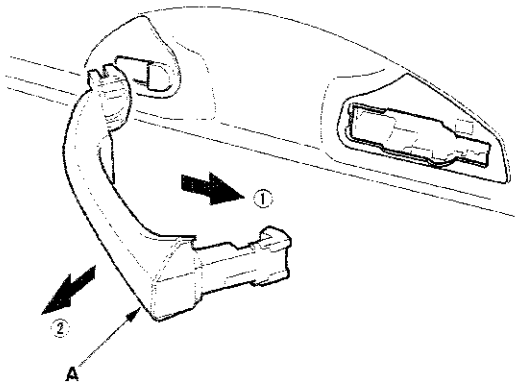

8. Release the hooks (A, B), then remove the outer handle front seal (C) and the outer handle rear seal (D).

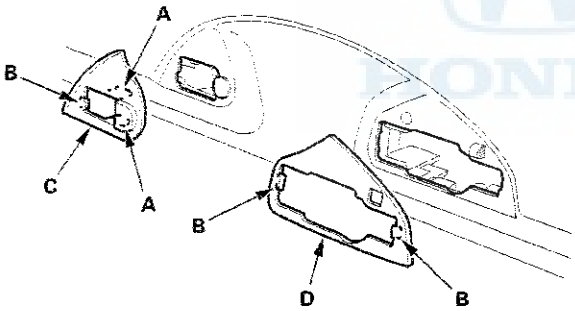

9. Remove the outer handle base (A).

   1. Detach the rod fastener (B).
   2. With a clip remover, disconnect the outer handle rod (C).
   3. Loosen the nut.
   4. Release the hook (D), and slide the outer handle base forward to release the special bolt (E) from the door panel.

Fastener Location

● : Nut, 1

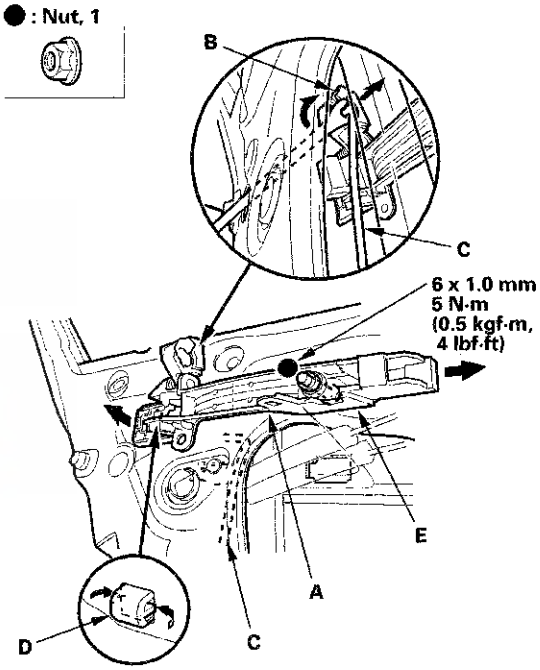

(cont'd)

Rear Door Outer Handle Replacement (cont'd)

10. Remove the rod fastener (A) from the outer handle base (B), then replace it with a new one.

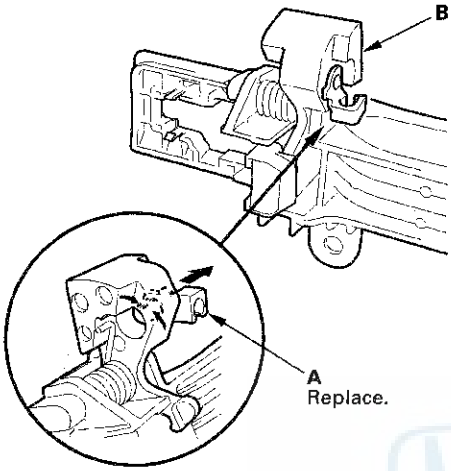

11. Install the handle in the reverse order of removal, and note these items:

- Reinstall the outer handle holder before installing the outer handle cover.
- Make sure the outer handle rod is connected securely.
- Make sure the door locks operate properly.
- Make sure the door handle works properly.
- When reinstalling the door panel, make sure the plastic cover is installed properly and sealed around its outside perimeter to seal out water.

Rear Door Latch Replacement

4-door

NOTE: Put on gloves to protect your hands.

1. Remove the door panel and the inner handle (see page 20-35).

2. Remove the plastic cover as needed (see step 2 on page 20-38).

3. Detach the rod fastener, and disconnect the outer handle rod from the outer handle base (see step 9 on page 20-39).

4. Detach the cable clip (A), and remove the screws (B, C) securing the latch (D), then remove latch through the hole in the door. Take care not to bend the outer handle rod (E), the latch cable (F), or the inner handle cable (G).

Fastener Locations

B ▶ : Screw, 3 C ▶ : Screw, 1

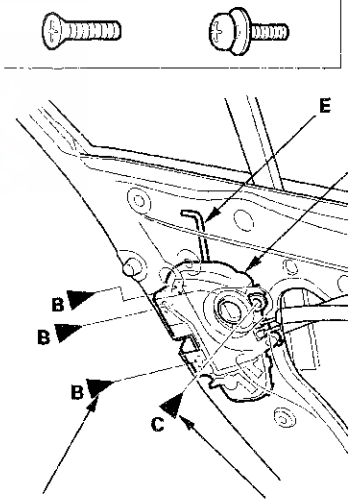

6 x 1.0 mm
6 N·m
(0.6 kgf·m, 4 lbf·ft)

6 x 1.0 mm
6 N·m
(0.6 kgf·m, 4 lbf·ft)

5. Remove the sponge seal (A), and remove the screw, then remove the latch protector (B) by releasing the hook (C), and remove the sponge seal (D) from the latch.

Fastener Location

▶ : **Screw, 1**

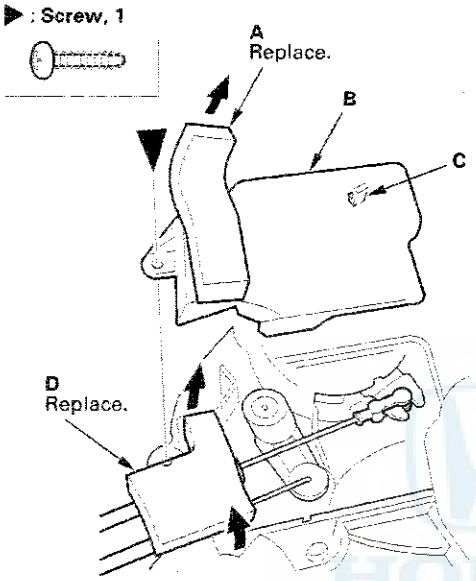

6. Disconnect the latch cable (A) and the inner handle cable (B) from the latch (C), and remove the sponge seals (D, E).

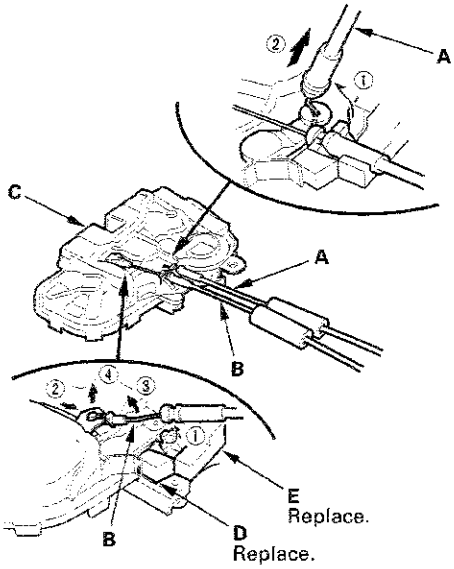

7. Install the latch in the reverse order of removal, and note these items:

- Before reinstalling the cables to the latch (A), clean the latch surface where the new sponge seals will be attached with isopropyl alcohol, and attach the new sponge seals (B, C) to the latch as shown.
- After reinstalling the latch cable (D) and the outer handle cable (E) to the latch, attach the new sponge seal (F) to the cable connecting portions on the latch as shown.
- Before reinstalling the latch protector (G), replace the inside sponge seal (H) and the outside sponge seal (I) with new ones:
  - Scrape off the old sponge seals from the protector, and clean the protector surfaces with isopropyl alcohol.
  - Attach the new inside sponge seal to the inside face of the protector as shown.
  - After reinstalling the latch protector to the latch, attach the new outside sponge seal to the protector and the latch as shown.
- Make sure the actuator connector is plugged in properly, and the outer handle rod is connected securely.
- Make sure the door locks and opens properly.
- When reinstalling the door panel, make sure the plastic cover is installed properly and sealed around its outside perimeter to seal out water.

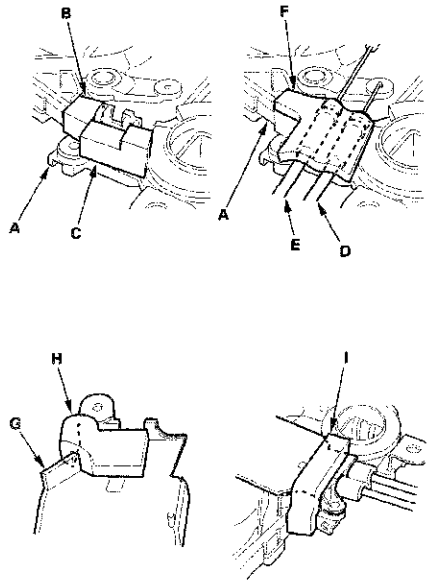

Rear Door Glass and Regulator Replacement

4-door

NOTE: Put on gloves to protect your hands.

1. Remove the door panel (see page 20-35).

2. Disconnect the power door lock actuator connector (A), and detach the harness clips (B). Remove the plug caps (C).

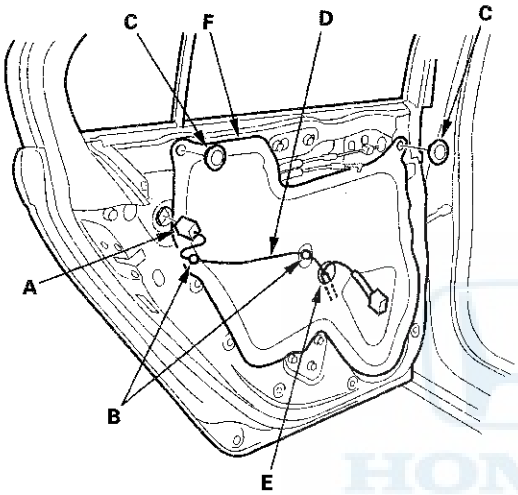

3. Pass the wire harness (D) through the hole (E) in the plastic cover (F), then remove the plastic cover.

NOTE: Remove the glue from the door surface. If the plastic cover is damaged or torn, replace it.

4. Carefully move the glass (A) until you can see the bolts, then remove them. Release the glass from the holder (B), then remove it from the regulator (C), and carefully lower the glass. Take care not to drop the glass inside the door.

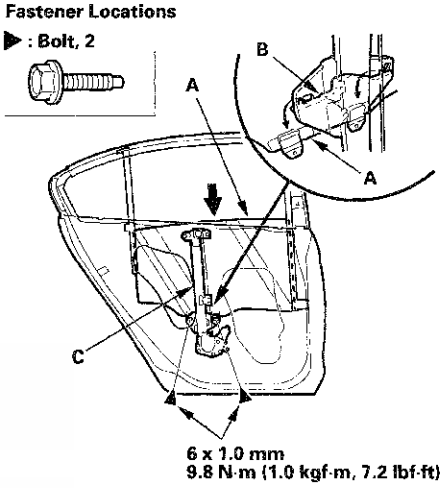

5. Remove the bolt (A) from the rear lower channel (B). Pull the glass run channel (C) away as needed, and remove the screw (D).

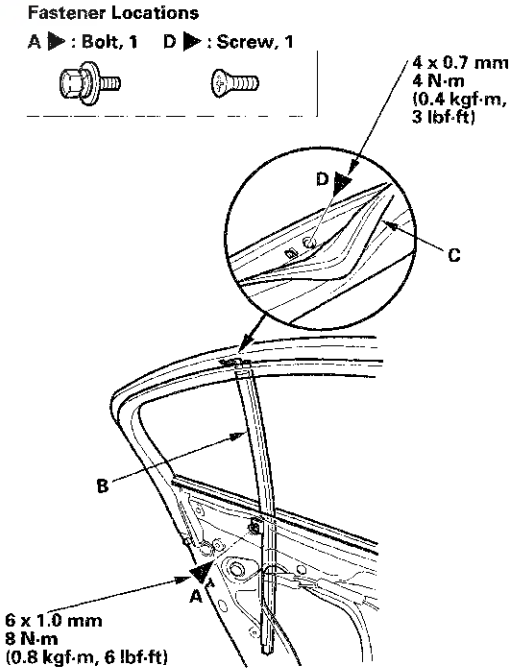

6. Pull the glass run channel (A) away as needed. Pull the rear lower channel (B) forward from the quarter glass seal (C), then release the upper hook (D) from the door. Remove the rear lower channel from the rear door glass (E), then pull the channel up to remove it.

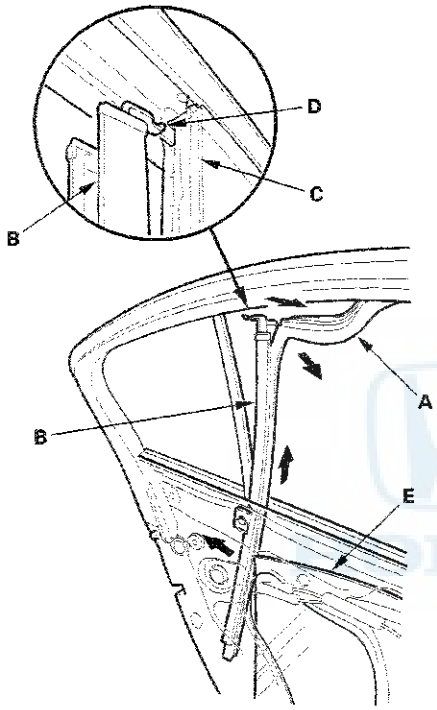

7. Remove the rear lower channel (A) from the glass run channel (B).

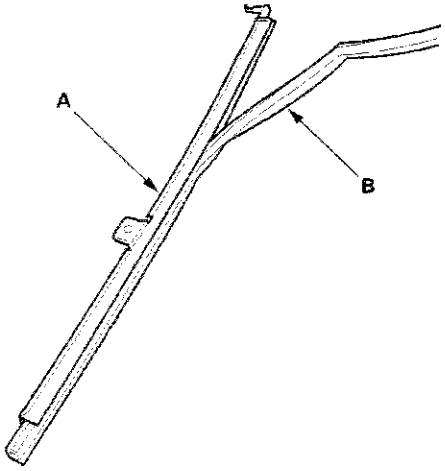

8. Carefully remove the glass (A) out through the window slot. Take care not to drop the glass inside the door.

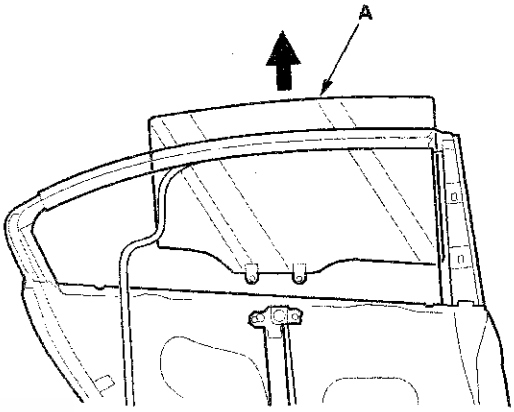

9. Remove the quarter glass (A). Take care not to damage the outer weatherstrip (B).

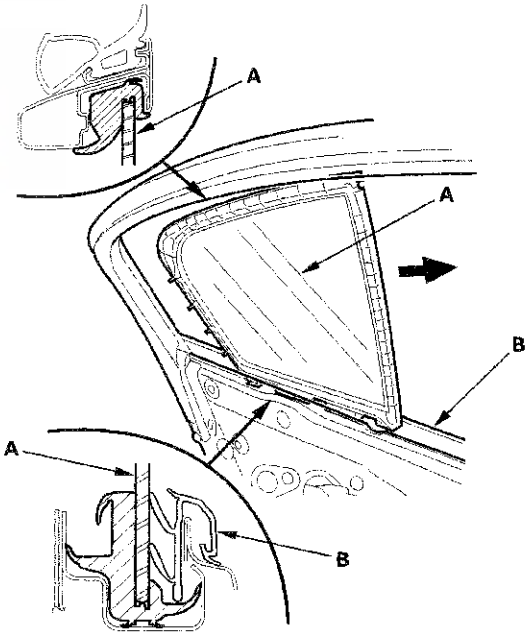

(cont'd)

Rear Door Glass and Regulator Replacement (cont'd)

10. Disconnect the connector (A) from the regulator (B).

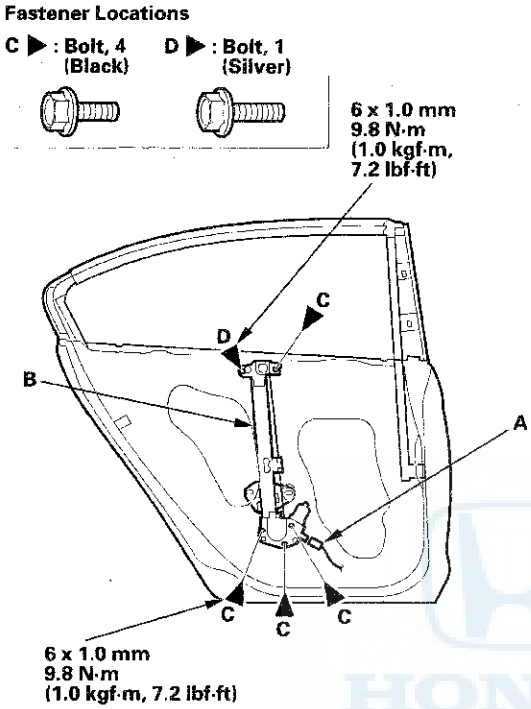

11. Remove the bolts (C), and loosen the bolt (D), then remove the regulator through the hole in the door.

12. Apply multipurpose grease to all the sliding surfaces of the regulator (A) where shown.

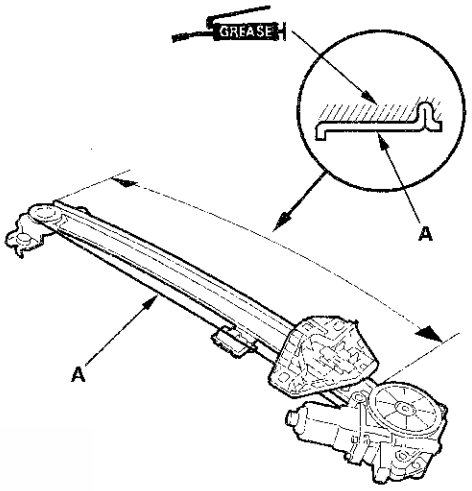

13. Install the glass and regulator in the reverse order of removal, and note these items:

- Roll the glass up and down to verify that if it moves freely without binding.
- Make sure that there is no clearance between the glass and glass run channel when the glass is closed.
- Adjust the position of the glass as necessary (see page 20-50).
- Do the power window control unit reset procedure (see page 22-251).
- When reinstalling the door panel, make sure the plastic cover is installed properly and sealed around its outside perimeter to seal out water.
- Check for water leaks (see step 9 on page 20-51).
- Test-drive and check for wind noise and rattles.
- Make sure the power door locks and windows operate properly.

Rear Door Sash Inner Trim Replacement

4-door

NOTE: Take care not to scratch the door.

1. Remove the door panel (see page 20-35).

2. Lower the glass fully.

3. Remove the rear door sash inner trim (A).

   -1 Pull back the outside edge of the trim to release the rear hook (B) from the door.
   -2 Pull back along the outside edge of the trim to release the hooks or the hook strips (C) from the door glass opening flange at the quarter glass portion and the roof portion of the door sash.
   -3 Release the hook (D) from the glass run channel (E) at the front corner of the door sash.
   -4 Pull back along the outside edge of the trim to release the hooks or hook strip (F) from the door glass opening flange at the B-pillar portion of the door sash.
   -5 Release the front hook (G) from the door.

Japan-produced models

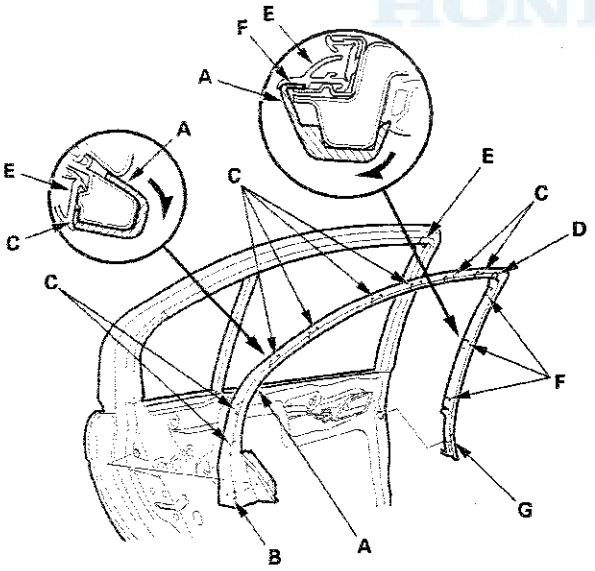

USA-produced models

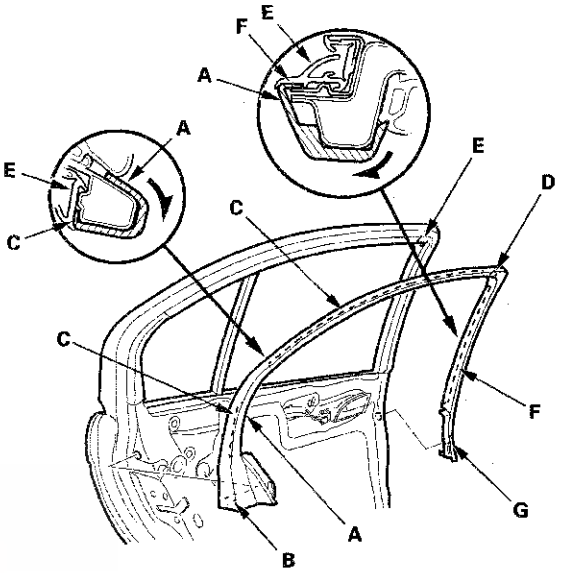

4. Install the trim in the r everse order of removal, and push the hooks or hook strips into place securely.

Rear Door Sash Outer Trim Replacement

4-door

NOTE: Take care not to scratch the door.

1. Remove the door outer molding (see page 20-48).

2. Pull the door sash outer trim (A) up to release the trim from the clips, and release the trim from between the door glass outer weatherstrip (B) and the door, then remove the trim. Take care not to damage the door glass outer weatherstrip.

Fastener Locations

▷ : **Clip, 2**

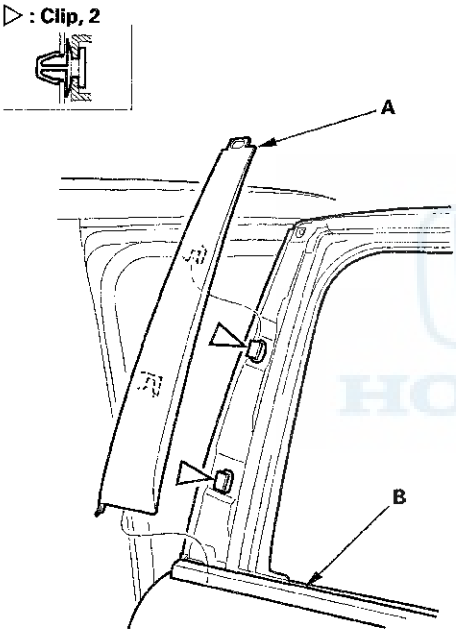

3. If the clips are damaged or stress-whitened, or the trim will be replaced, remove the clips from the door.

4. If the old trim will be reinstalled, and the clips are damaged or stress-whitened, replace them with new ones.

5. If the door sash outer trim (A) will be replaced, or the clips (B) are removed from the door, insert the trim between the door glass outer weatherstrip (C) and the door, and install the trim by pushing on the clip portions until the clips snap into place.

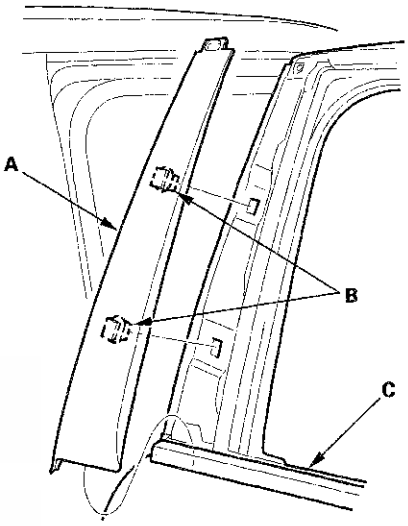

6. If the clips (A) are not removed from the door, install the door sash outer trim (B) by inserting it to the clips and between the door glass weatherstrip (C) and the door.

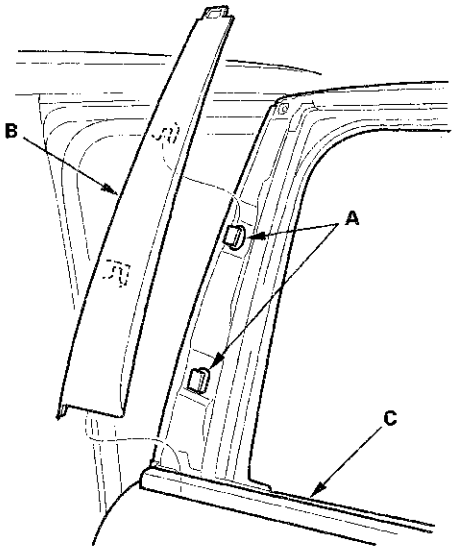

7. Reinstall the door outer molding (see page 20-48).

Rear Door Glass Outer Weatherstrip Replacement

4-door

NOTE:
- Put on gloves to protect your hands.
- Take care not to scratch the door.

1. Remove these items:
   - Door panel (see page 20-35)
   - Plastic cover, as needed (see step 2 on page 20-38)
2. Raise the glass fully.
3. Remove the screws from the front and rear edges of the door.

Fastener Locations

▶ : Screw, 2

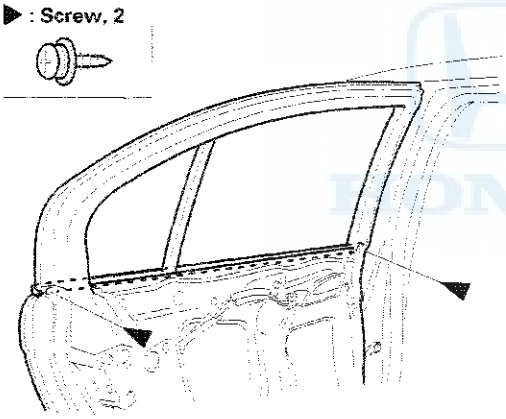

4. From the inside of the door, slide the clips (A) of the door glass outer weatherstrip (B) to release the hooks (C) from the flanges (D) of the door panel.

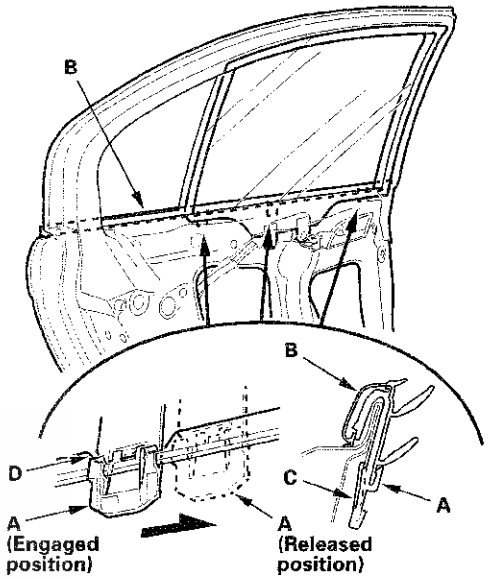

5. Pull up the door glass outer weatherstrip (A) while passing the front and rear edges of the weatherstrip over the door sash outer trim (B) and the door outer molding (C), then remove the weatherstrip.

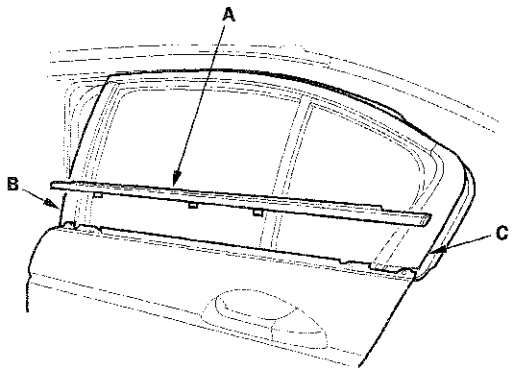

6. If the clips are damaged or stress-whitened, replace them with new ones.
7. Before installing the door glass outer weatherstrip, align the clips of the weatherstrip to the flanges where the clips should be engaged by sliding them.
8. Push the clip portions of the rear door glass outer weatherstrip into place securely.

Rear Door Outer Molding Replacement

Special Tools Required
KTC trim tool set SOJATP2014 *
* Available through the Honda Tool and Equipment Program; call 888-424-6857

4-door

NOTE:
- If you remove the door outer molding, replace it with a new one because it will bend during removal.
- Put on gloves to protect your hands.
- Take care not to scratch the door.
- Use the appropriate tool from the KTC trim tool set to avoid damage when removing components.

1. Using a clip remover, detach the clips (A), then pull back the door weatherstrip (B), and remove the screws (C, D).

Fastener Locations

A ▷ : Clip, 3 (Black) C ▶ : Screw, 1 D ▶ : Screw, 2

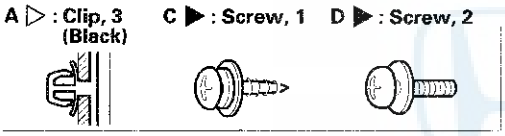

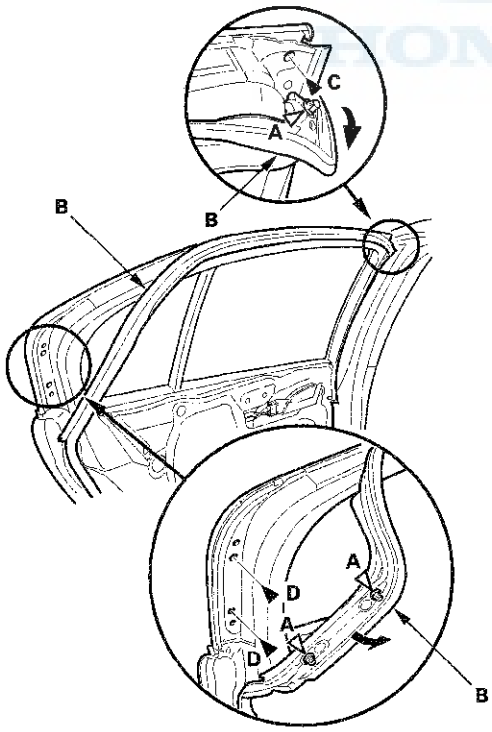

2. While removing the upper edge of the door outer molding (A) from the edge of the sash, cut the double-sided adhesive tape (B) with a utility knife, then remove the molding from the sash, and remove the molding from between the door glass outer weatherstrip (C) and the door.

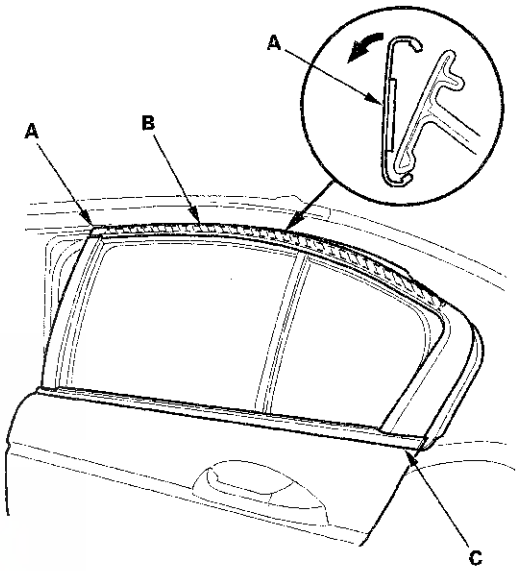

3. Scrape off remaining double-sided adhesive tape from the sash, then clean the sash surface with a shop towel dampened in isopropyl alcohol.

4. Install the new door outer molding in the reverse order of removal, and note these items:

   - Insert the rear edge of the molding between the door glass outer weatherstrip and the door properly.
   - Push adhesive portions into place securely.
   - Make sure the upper and lower sides of the molding are catching the edges of the sash properly.
   - Push the door weatherstrip clips into place securely.

Rear Door Weatherstrip Replacement

4-door

NOTE:
- Put on gloves to protect your hands.
- Take care not to scratch the door.
- Take care not to damage the front upper corner clip (black) and rear upper corner clips (black) in the weatherstrip because these clips are not able to replace with new ones.
- Use a clip remover to remove the clips.

1. At the B-pillar, remove the door checker mounting bolt (A).

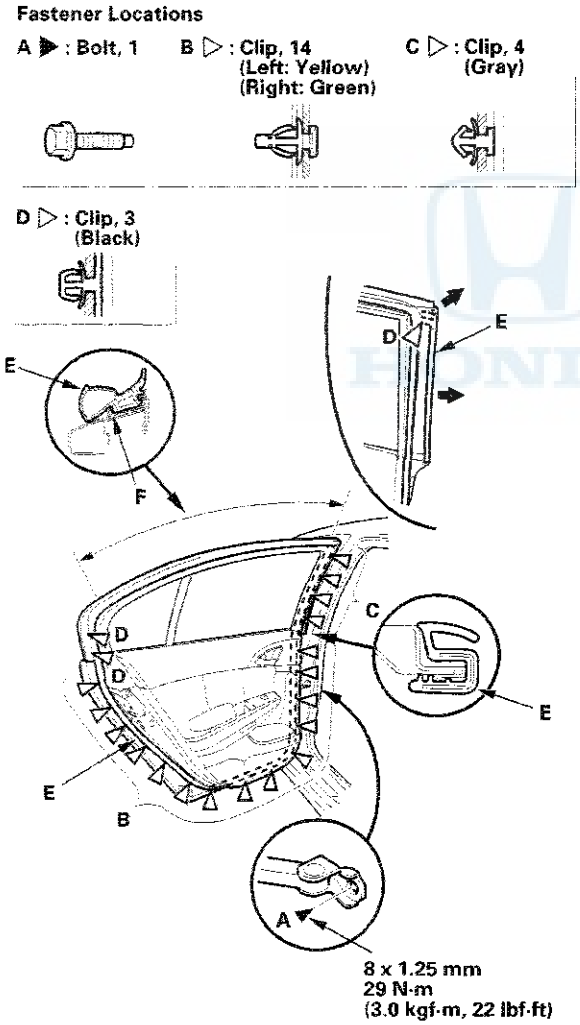

2. Detach the clips (B, C, D), and release the door weatherstrip (E) from the holder (F) of the door sash, then remove the weatherstrip.

3. Install the weatherstrip in the reverse order of removal, and note these items:

   - If the clips are damaged or stress-whitened, replace them with new ones.
   - Make sure the weatherstrip is installed in the holder securely.
   - Apply medium strength liquid thread lock to the door checker mounting bolt before installation.
   - Check for water leaks (see step 9 on page 20-51).

Door Glass Adjustment

NOTE: Check the weatherstrip and the glass run channel for damage or deterioration, and replace them if necessary.

1. Place the vehicle on a firm, level surface.

2. Remove these items:

   - Door panel:
     - 2-door (see page 20-12)
     - 4-door front door (see page 20-16)
     - 4-door rear door (see page 20-35)
   - Plastic cover:
     - Front door (see step 2 on page 20-19)
     - Rear door (see step 2 on page 20-38)

3. Carefully move the glass (A) until you can see the glass mounting bolts (B), then loosen them.

2-door

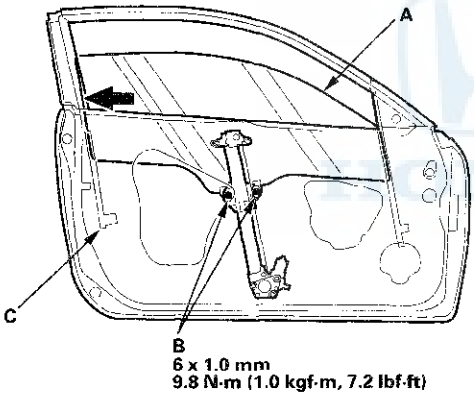

4-door front

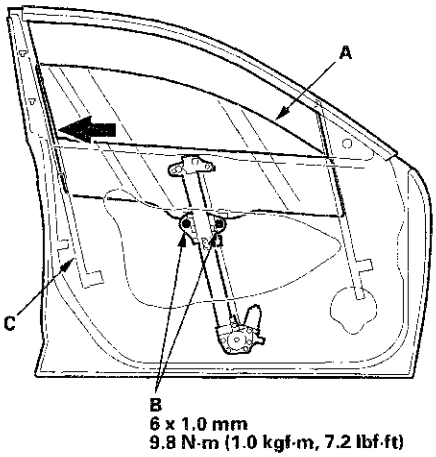

4-door rear

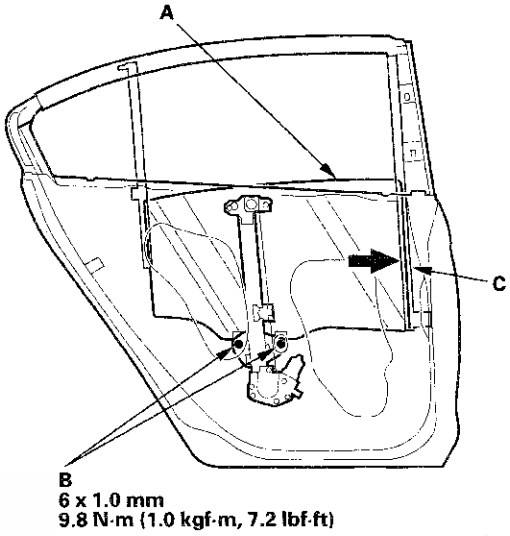

4. Push the glass against the run channel (C), then tighten the glass mounting bolts.

5. Check that the glass moves smoothly.

6. Raise the glass fully, and check for gaps. Also make sure that the glass (A) contacts the glass run channel (B) evenly.

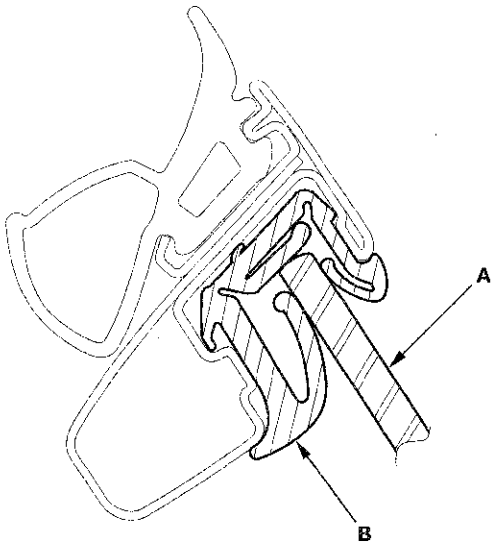

7. Attach the plastic cover making sure it is sealed around its outside perimeter to seal out water.

8. Reinstall the door panel:

   - 2-door (see page 20-12).
   - 4-door front door (see page 20-16).
   - 4-door rear door (see page 20-35).

9. Check for water leaks. Run water over the roof and on the sealing area as shown, and note these items:

   - Use a 12 mm (1/2 in.) diameter hose (A).
   - Adjust the rate of water flow as shown (B).
   - Do not use a nozzle.
   - Hold the hose about 300 mm (12 in.) away from the door (C).

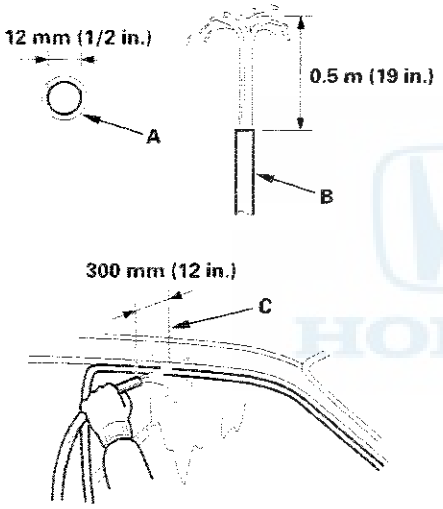

Door Position Adjustment

NOTE: Check for a flush fit with the body, then check for equal gaps between the front, rear, and bottom door edges and the body. Check that the door and body edges are parallel.

1. Place the vehicle on a firm, level surface when adjusting the doors.

2. Adjust at the hinges (A):

   - Pad a floor jack (B) with shop towels (C), then use the jack to support the door to prevent damage to the door while adjusting it.
   - On the front door: Remove the front inner fender (see page 20-273). Loosen the hinge mounting bolts (D) slightly, and move the door backward or forward, up or down as necessary to equalize the gaps.
   - On the rear door: Loosen the hinge mounting bolts (E) slightly, and move the door backward or forward, up or down as necessary to equalize the gaps.

2-door

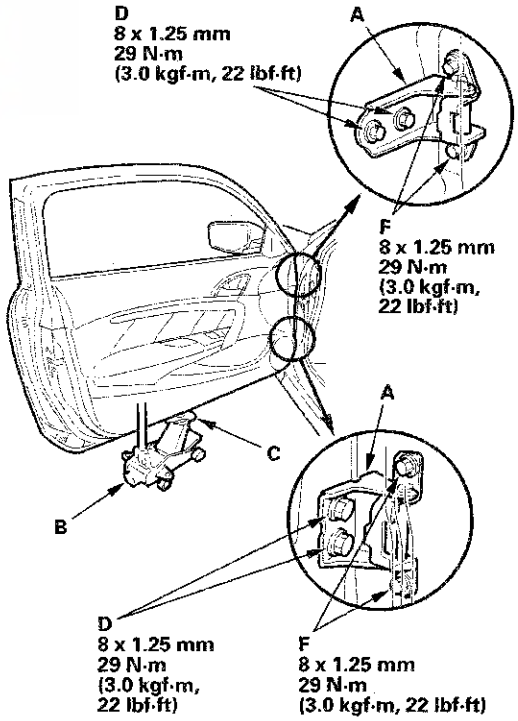

(cont'd)

Door Position Adjustment (cont'd)

4-door front

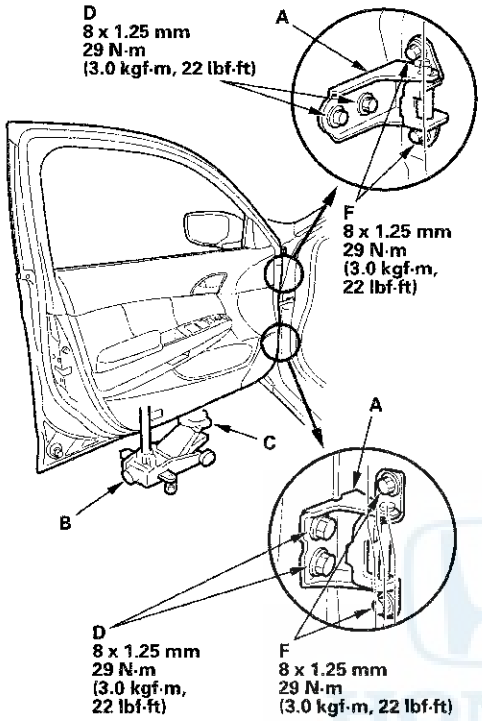

4-door rear

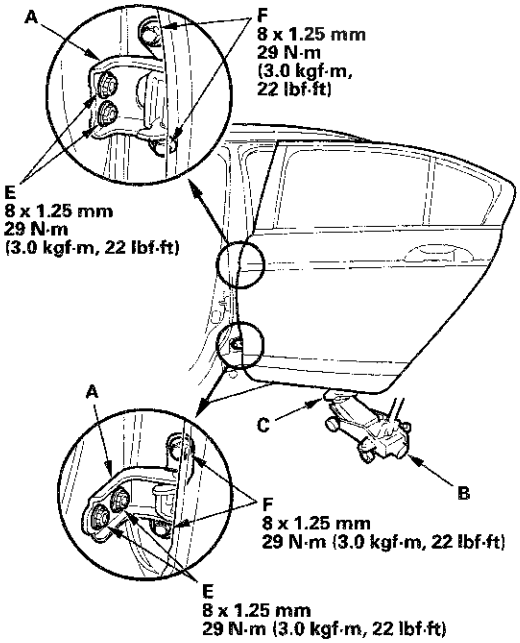

3. If necessary, replace the door mounting bolts with the adjusting bolts (P/N 90102-SFA-305) made specifically for door adjustment, then adjust at the door: Loosen the door mounting bolts (F) slightly, and move the door up or down as necessary to equalize the gaps, and move it in or out until is not flush with the body.

4. Check that the door and the body edges are parallel. If necessary, adjust the door cushions (A) to make the rear of the doors flush with the body.

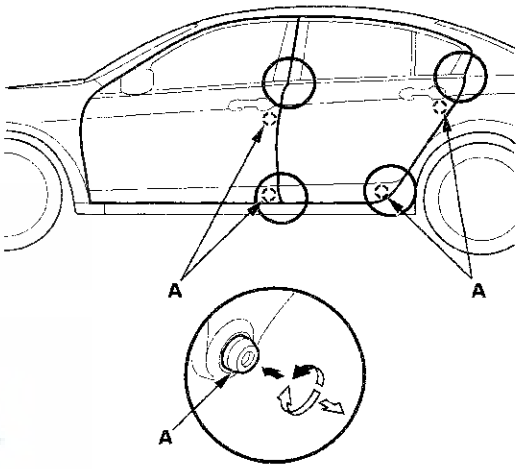

5. Apply touch-up paint to the hinge mounting bolts, and around the hinges.

6. Check for water leaks (see step 9 on page 20-51).

Door Striker Adjustment

Make sure the door latches securely without slamming it. If necessary, adjust the striker (A): The striker nuts are fixed, but the striker can be adjusted slightly up or down, and in or out.

1. Loosen the screws (B).

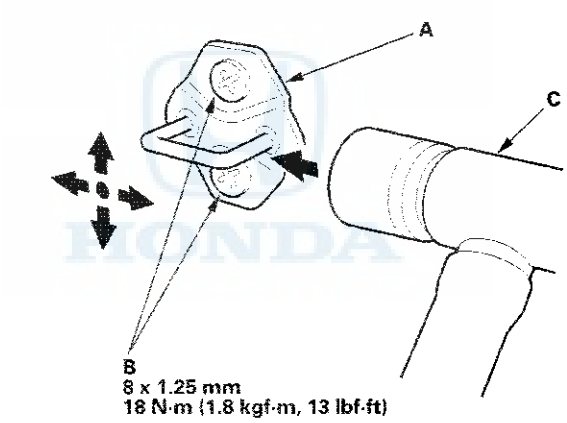

2. Wrap the striker with a shop towel, then adjust the striker by tapping it with a plastic hammer (C). Do not tap the striker too hard.

3. Lightly tighten the screws.

4. Hold the outer handle out, and push the door against the body to be sure the striker allows a flush fit. If the door latches properly, tighten the screws and recheck.

Component Location Index

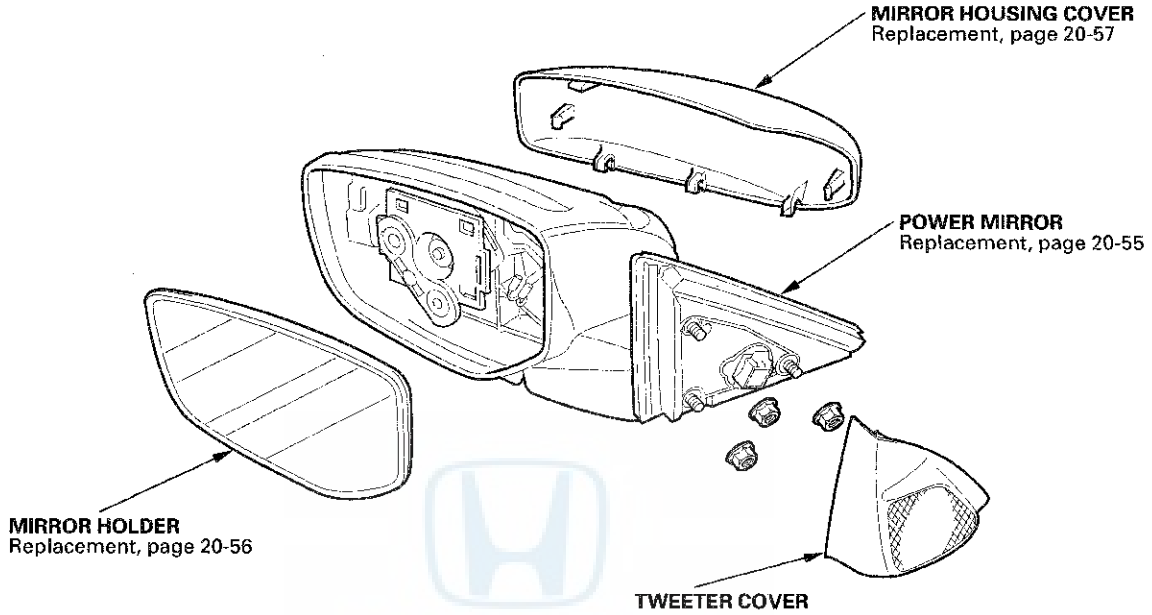

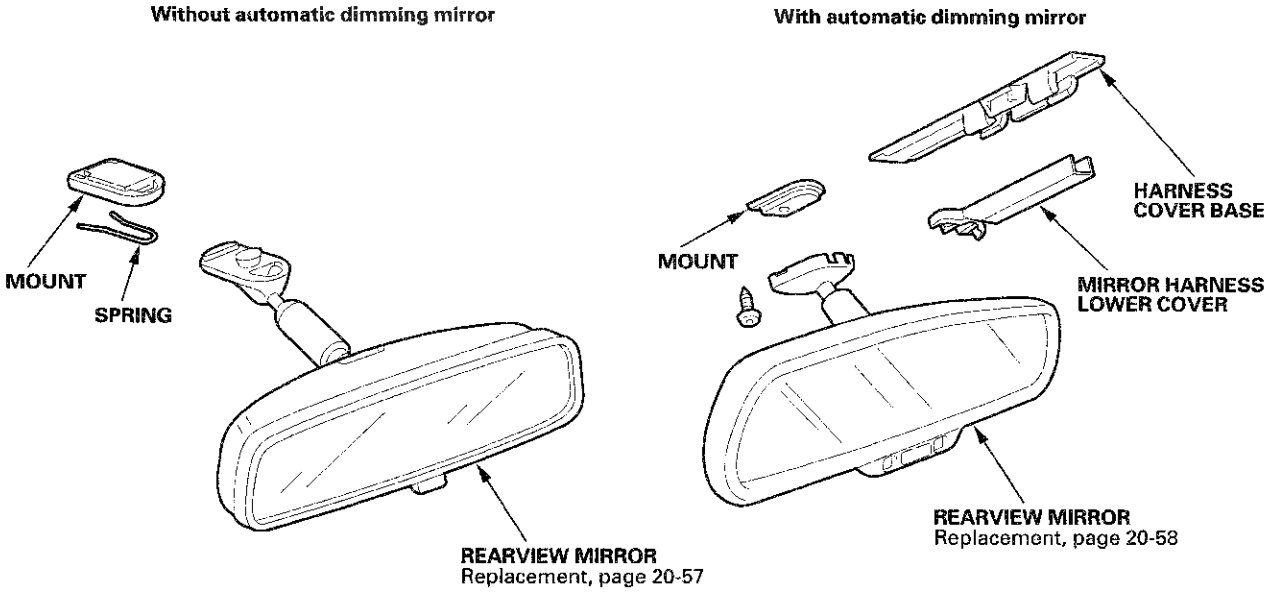

Power Mirror Replacement

1. Lower the door glass fully.

2. With your hand, carefully pull the top edge of the door tweeter cover (A) out to detach the upper hooks (B) and the clip, and remove the cover by lifting it upward to release the bottom hooks (C). Disconnect the door tweeter connector (D).

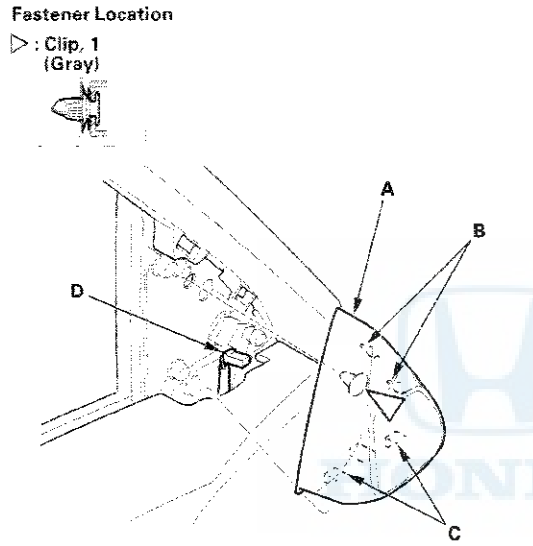

3. Disconnect the connector (A).

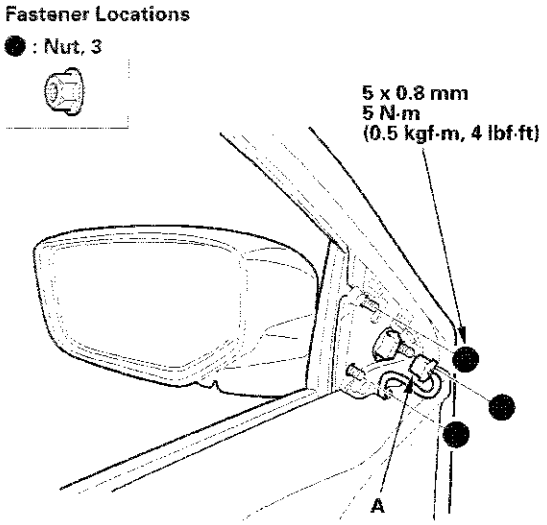

4. While holding the mirror, remove the nuts securing the mirror.

5. While holding the mirror, squeeze the retaining tabs on the connector clip (A), then push out to remove the mirror (B). Take care not to scratch the door.

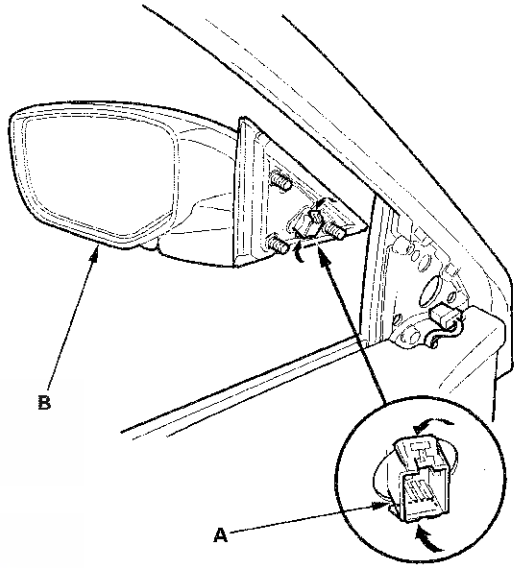

6. Install the mirror in the reverse order of removal, and note these items:

   - Make sure the connector is plugged in properly.
   - If the clip is damaged or stress-whitened, replace it with a new one.
   - Push the clip and the upper hooks on the cover into place securely.

Mirror Holder Replacement

NOTE: Put on gloves to protect your hands.

1. Carefully push on the top edge of the mirror holder (A) by hand.

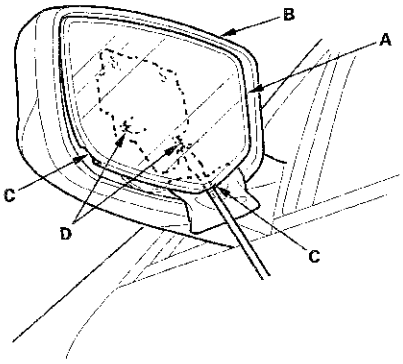

2. Put a shop towel in the opening between the bottom edge of the mirror holder and the mirror housing (B) to prevent scratches. Insert a flat-tip screwdriver wrapped with protective tape to the guide notches (C) of the mirror holder, and detach the bottom clips (D).

3. Use a heat gun to apply heat to the opening between the mirror holder (A) and the mirror housing. Carefully pull out the bottom edge of the mirror holder to separate the adhesive (B), and then release the side clips (C).

   NOTE: Do not heat the plastic parts too much or you may damage them.

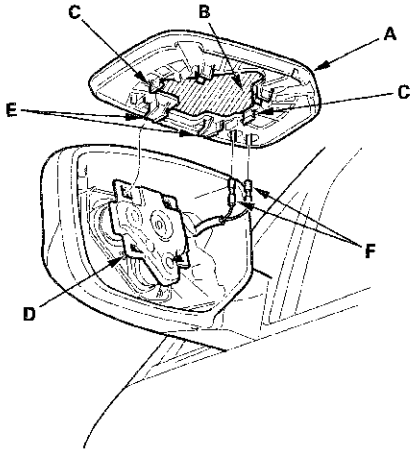

4. Separate the mirror holder from the actuator (D) by releasing the hooks (E). If equipped, disconnect the mirror defogger connectors (F).

5. Before reinstalling the mirror holder to the inner holder (A) on the actuator, check the actuator rods (B) and the actuator boots (C). Make sure the actuator rods are securely mounted in the holes, and that the boots properly cover each rod.

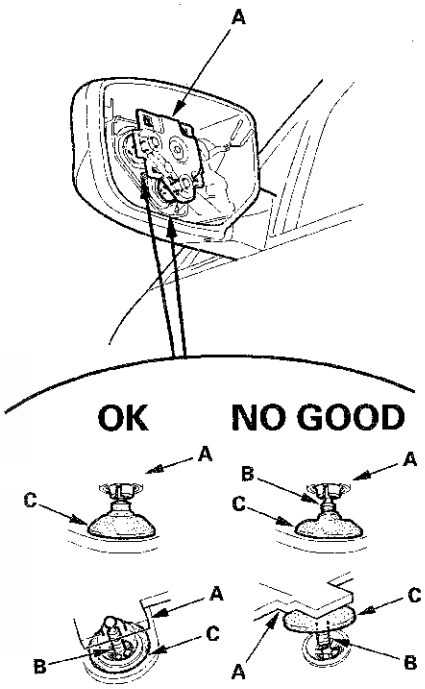

6. If equipped, reconnect the mirror defogger connectors.

7. Reattach the hooks of the mirror holder to the actuator, then position the mirror holder on the actuator. Carefully push on the clip portions of the mirror holder until the mirror holder locks into place.

8. Check the actuator operation.

Mirror Housing Cover Replacement

1. Remove the mirror holder (see page 20-56).

2. From the mirror holder opening, release the hooks (A) of the mirror housing cover (B).

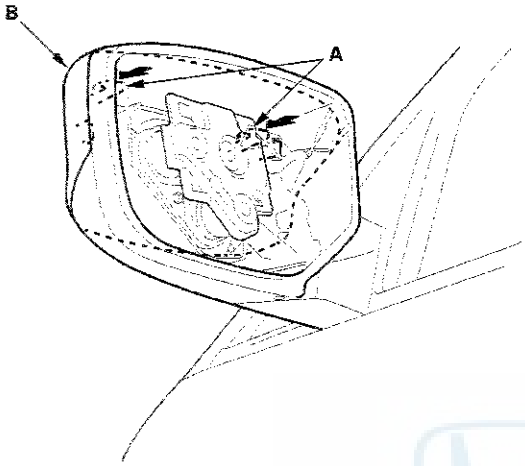

3. Release the hooks (A), then remove the mirror housing cover (B).

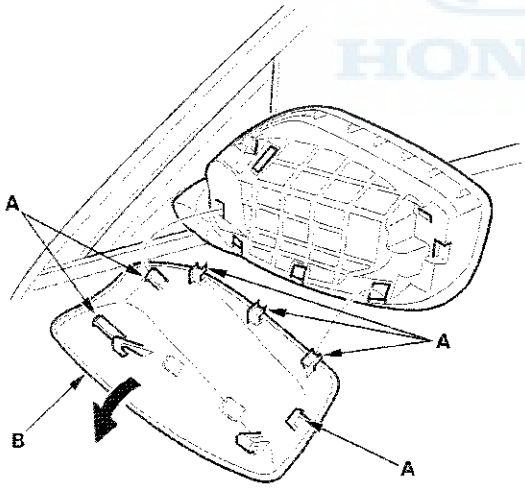

4. Install the mirror housing cover in the reverse order of removal.

Rearview Mirror Replacement

Without Automatic Dimming Mirror

1. Turn the rearview mirror base (A) 90 °.

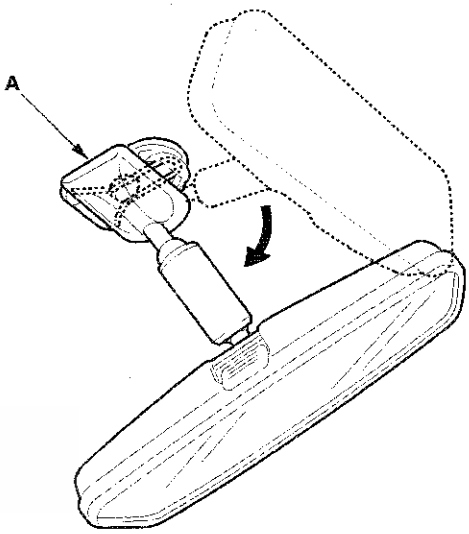

2. Slide the rearview mirror (A) down toward the bottom of the windshield to detach it from the spring (B) in the mount (C).

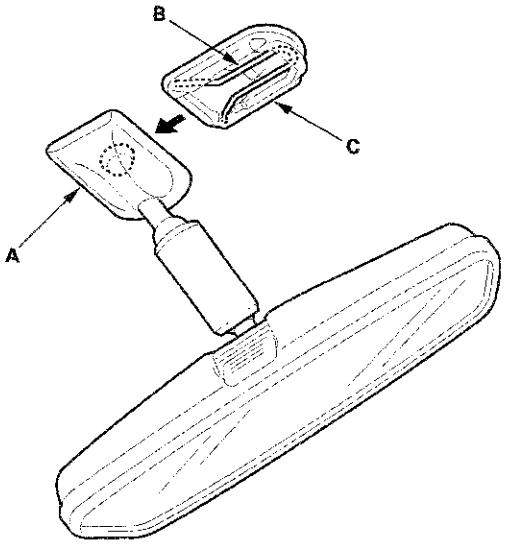

3. If necessary, remove the spring from the mount.

4. Install the rearview mirror in the reverse order of removal.

(cont'd)

Rearview Mirror Replacement (cont'd)

With Automatic Dimming Mirror

1. Pry out the rearview mirror harness lower cover (A) to detach the hooks (B), then slide the lower cover rearward, and remove the lower cover by detaching the hooks (C) of the rearview mirror harness cover base (D).

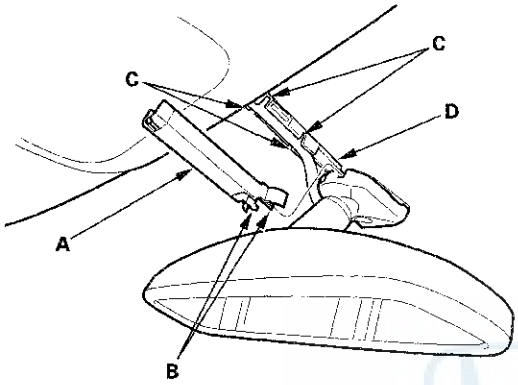

2. Disconnect the connector (A).

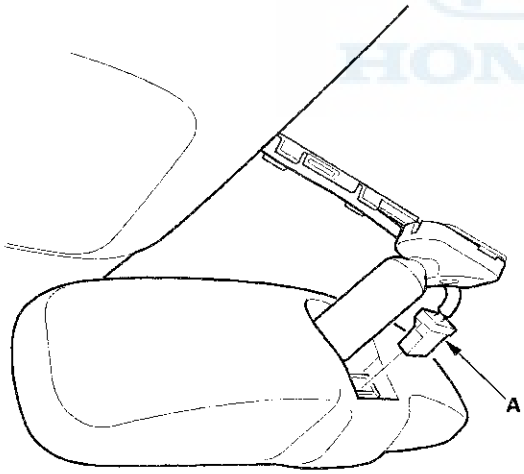

3. Using a TORX T20 bit, loosen the TORX screw, then slide the rearview mirror (A) rearward and off the mount (B).

Fastener Location

▶ : Screw, 1

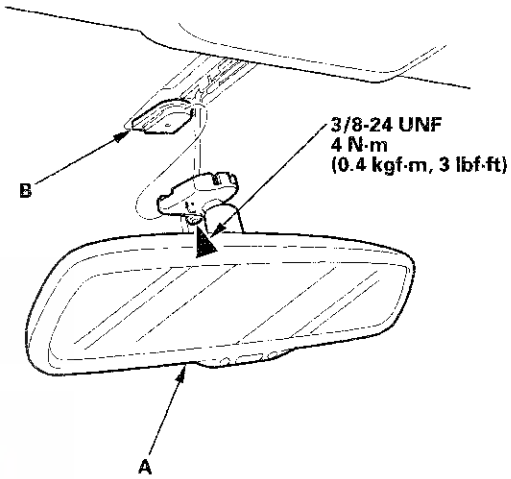

4. Install the mirror in the reverse order of removal, and note these items:

   - Before installing the mirror, remove the TORX screw, and apply medium strength liquid thread lock to it.
   - Make sure the connector is plugged in properly.

Component Location Index

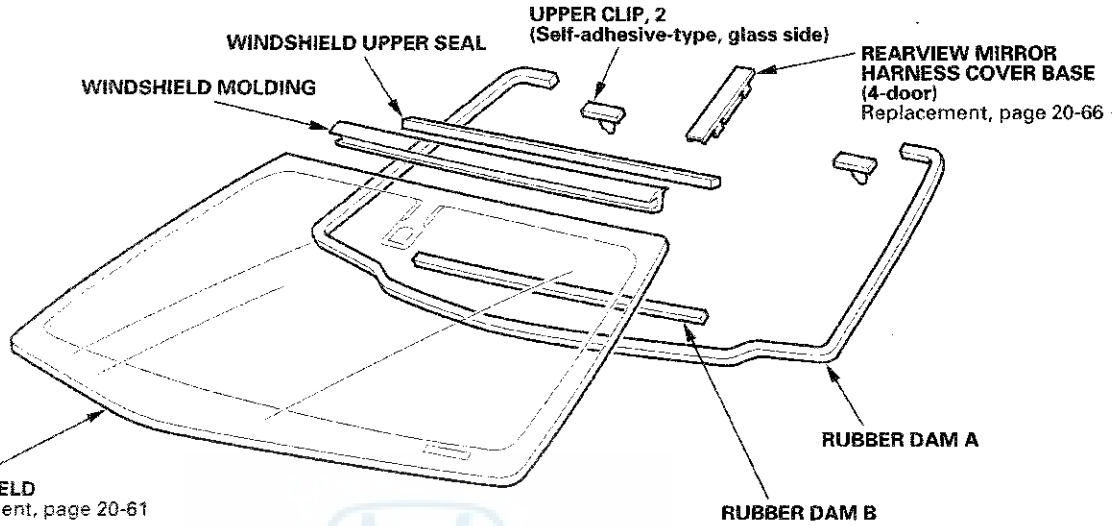

2-door

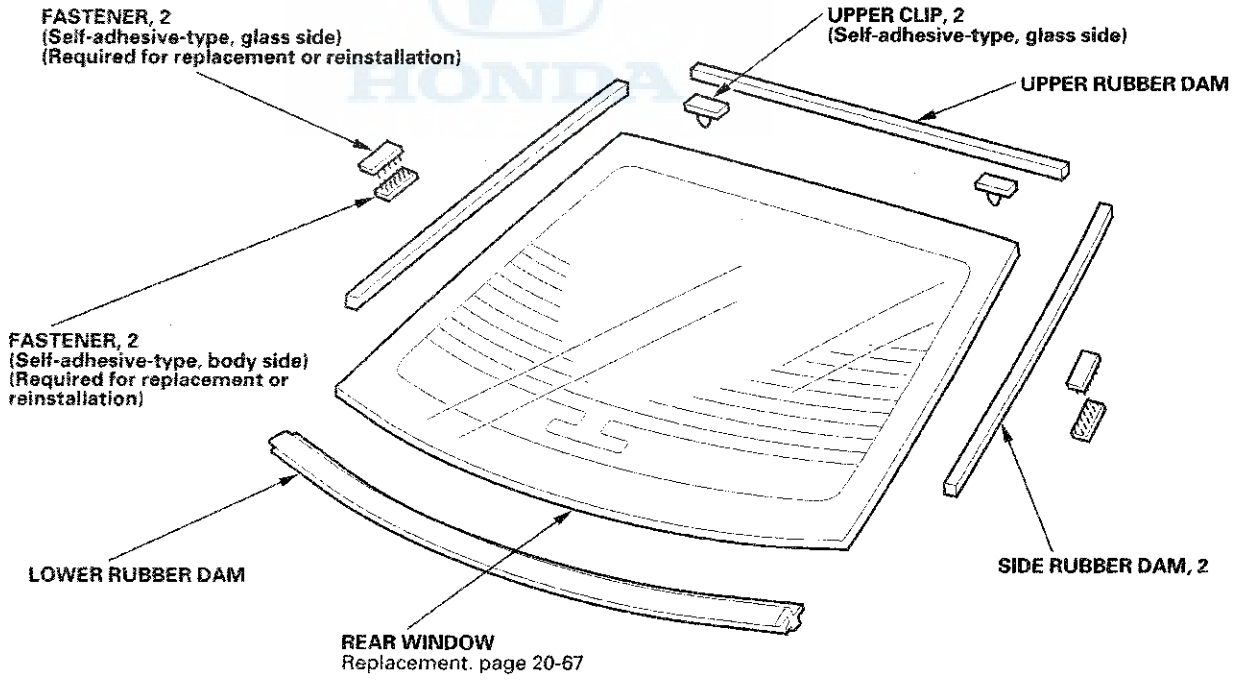

(cont'd)

Component Location Index (cont'd)

4-door

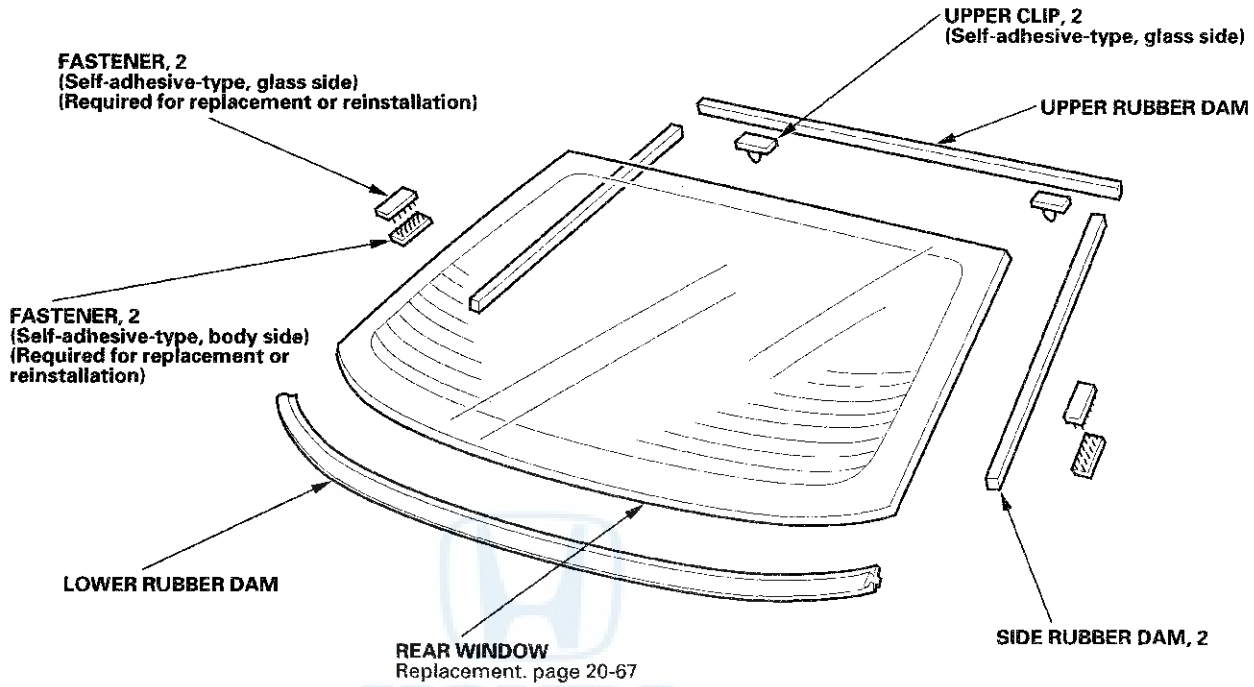

2-door

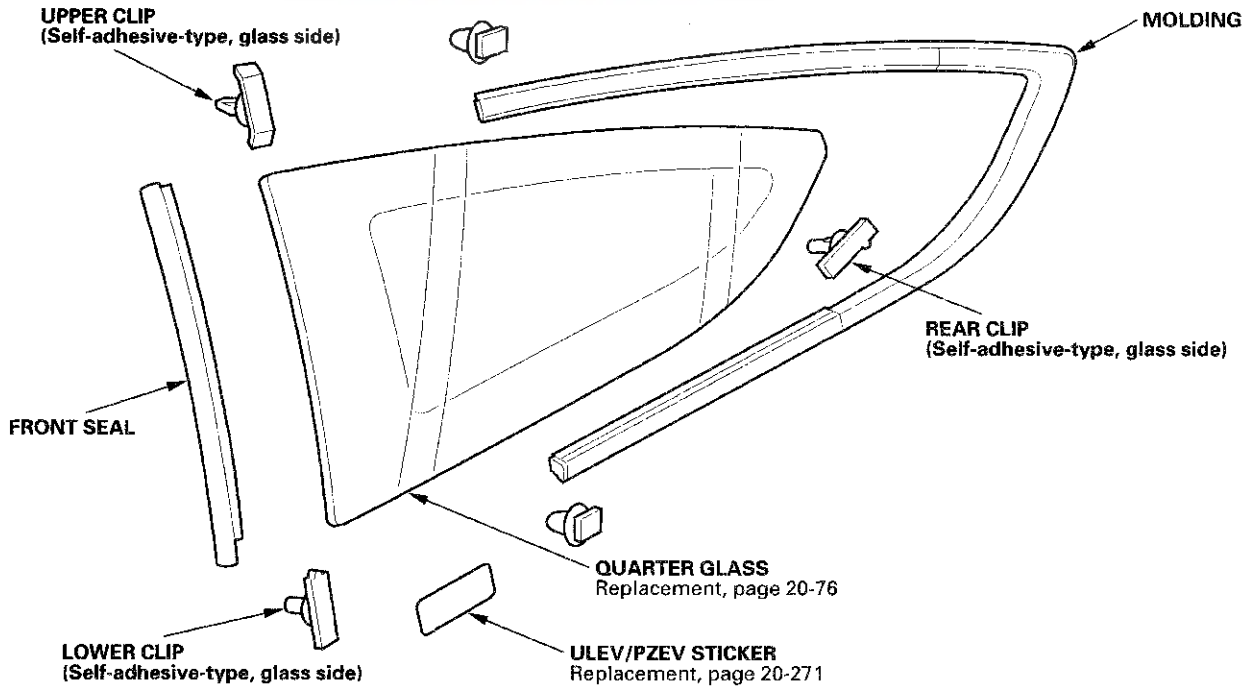

Windshield Replacement

NOTE:
- Put on gloves to protect your hands.
- Wear eye protection while cutting glass adhesive with a piano wire.
- Use seat covers to avoid damaging the seat.
- When replacing a broken windshield, a commercially available windshield cutter can be efficiently used for cutting adhesive. For details, follow the instructions of the tool manufacturer.

1. Remove these items:

   - Cowl covers (see page 20-261)
   - Rearview mirror
     - Without automatic dimming mirror (see page 20-57)
     - With automatic dimming mirror (see page 20-58)
   - A-pillar trim, both sides (see page 20-101)
   - Roof moldings, both sides (see page 20-263)

2. Remove the molding (A) from the upper edge of the windshield (B). If necessary, cut the molding with a utility knife.

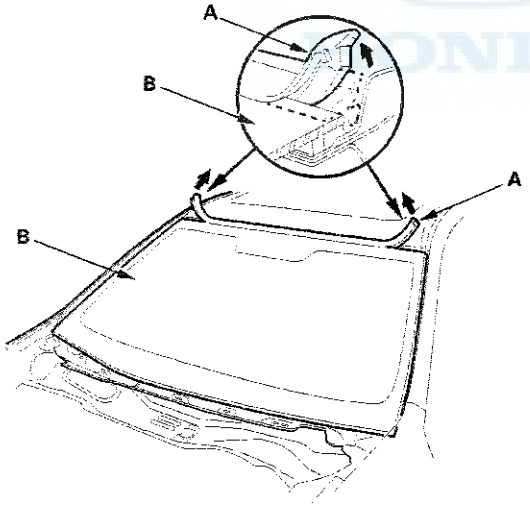

3. If the old windshield will be reinstalled, make alignment marks across the glass and the body with a grease pencil.

4. Pull down the front portion of the headliner (see page 20-131). Take care not to bend the headliner excessively, or you may crease or break it.

5. Apply protective tape along the edge of the dashboard and body. Using an awl, make a hole through the rubber dam and adhesive from inside the vehicle at a corner of the windshield. Push a piece of piano wire through the hole, and wrap each end around a piece of wood.

6. With a helper on the outside, pull the piano wire (A) back and forth in a sawing motion. Hold the piano wire as close to the windshield (B) as possible to prevent damage to the body and dashboard. Carefully cut through the rubber dam and adhesive (C) around the entire windshield.

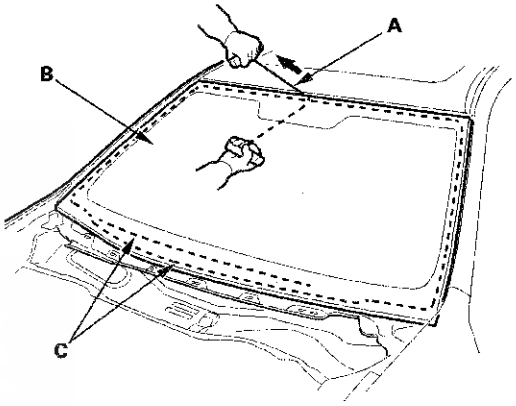

Cutting positions

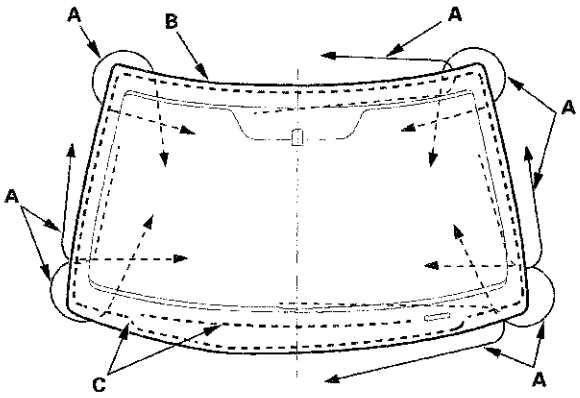

7. Carefully remove the windshield.

(cont'd)

Windshield Replacement (cont'd)

8. Use a putty knife to scrape old adhesive smooth to a thickness of about 2 mm (0.08 in.) on the bonding surface around the entire windshield opening flange:

   - Do not scrape down to the painted surface of the body; damaged paint will interfere with proper bonding.
   - Remove the rubber dams from the body.

9. Clean the body bonding surface with a shop towel dampened in isopropyl alcohol. After cleaning, keep oil, grease, and water from getting on the clean surface.

10. If the old windshield will be reinstalled, use a putty knife to scrape off old adhesive, upper clips, and rubber dams from the windshield. Clean the inside face and the edge of the windshield with isopropyl alcohol where new adhesive will be applied. Make sure the bonding surface is kept free of water, oil, and grease.

11. With automatic dimming rearview mirror: If the windshield will be replaced with a new one, attach the new rearview mirror harness cover base to the inside face of the windshield (see page 20-66).

12. Attach the rubber dam A, and the upper clips (B) with adhesive tape to the inside face of the windshield (C) as shown. Before installing the upper clips, apply primer to the area where the adhesive tape will be applied to the inside face of the windshield:

    - Be sure the rubber dam and the upper clips line up with the alignment marks (D).
    - With the printed dots (E) on the windshield as a guide, attach the rubber dam A to both bottom corners of the windshield.
    - Be sure the convex portion (F) of the left and right clips faces the right side.
    - Be careful not to touch the windshield where adhesive will be applied.

Rubber dam adhesive tape:
Thickness 0.16 mm (0.006 in.)
Width 3.5 mm (0.14 in.)
Upper clip adhesive tape:
Thickness 0.4 mm (0.016 in.)
Width 10 mm (0.39 in.)

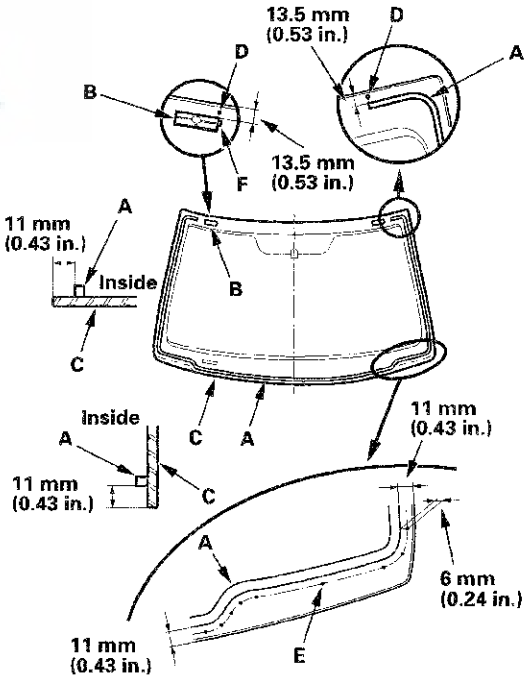

13. Attach the rubber dam B with adhesive tape to the inside surface of the windshield (A) as shown.

- Be sure the rubber dam lines up with the alignment marks (C).
- With the edge (D) of the black ceramic on the windshield as a guide, attach the rubber dam B to the windshield.
- Be careful not to touch the windshield where adhesive will be applied.

Rubber dam adhesive tape:
Thickness 0.16 mm (0.006 in.)
Width 3.5 mm (0.14 in.)

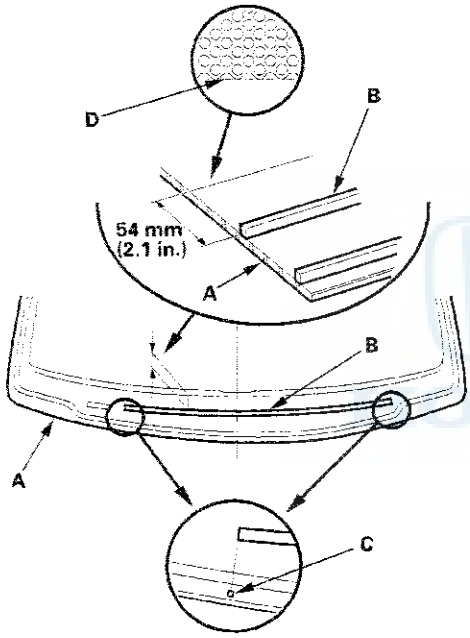

14. Attach the molding (A) with adhesive tape (B) to the upper edge of the windshield (C). Be careful not to touch the windshield where adhesive will be applied.

Molding adhesive tape:
Thickness 0.8 mm (0.03 in.)
Width 4 mm (0.16 in.)

2-door

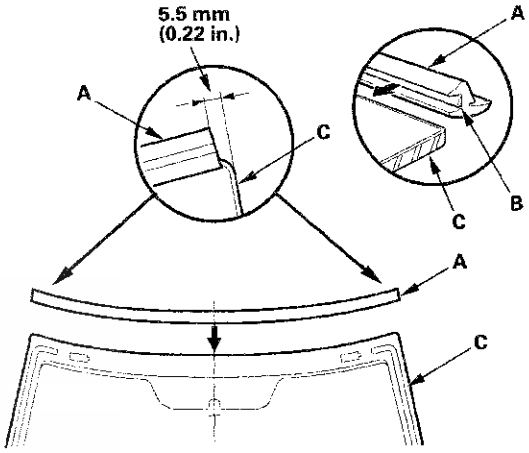

4-door

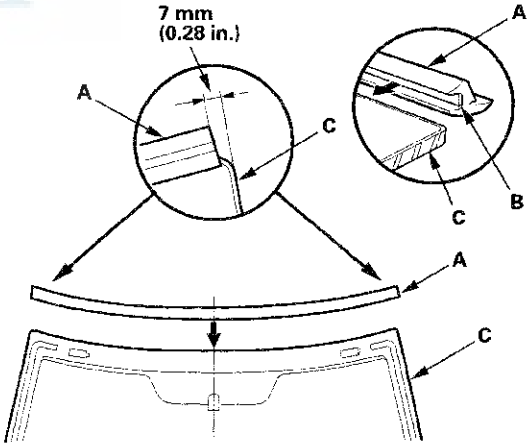

(cont'd)

Windshield Replacement (cont'd)

15. Attach the molding upper seal (A) with adhesive tape to the inside surface of the molding (B) as shown.

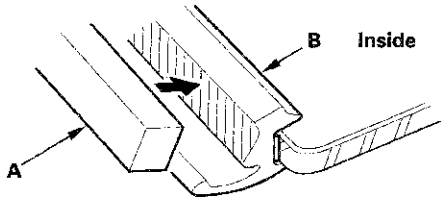

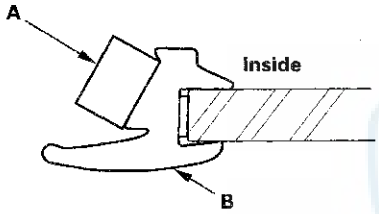

16. Set the windshield in the opening, and center it. Make alignment marks (A) across the windshield and the body with a grease pencil at the four points shown. Make sure the pins (B) of both upper clips (C) contact with the edge of the body holes. Be careful not to touch the windshield where adhesive will be applied.

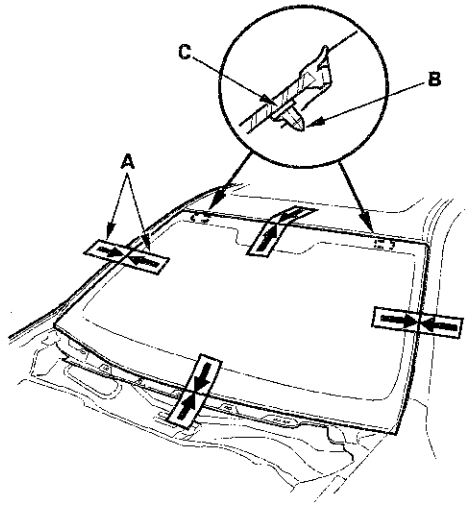

17. Remove the windshield.

18. With a sponge applicator, apply a light coat of glass primer to the windshield (A) along the edge of the molding (B) and rubber dams (C) as shown, then lightly wipe it off with gauze or cheesecloth:

- Apply glass primer to the molding.
- Do not apply body primer to the windshield, and do not get body and glass primer sponge applicators mixed up.
- Never touch the primed surfaces with your hands. If you do, adhesive may not bond to the windshield properly, causing a leak after the windshield is installed.
- Keep water, dust, and abrasive materials away from the primed surfaces.

: **Apply glass primer here.**

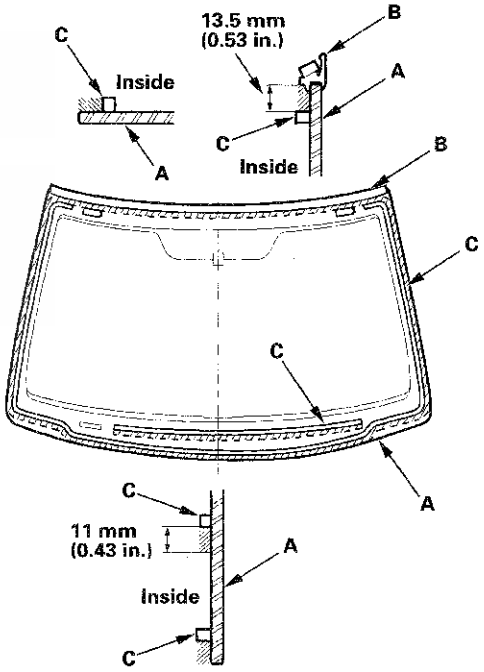

19. With a sponge applicator, carefully apply a light coat of body primer to any exposed paint or metal around the flange where new adhesive will be applied. Let the primer dry for at least 10 minutes:

- Do not apply body primer to any remaining original adhesive on the flange.
- Be careful not to mix up the body and glass primer sponge applicators.
- Never touch the primed surfaces with your hands.

: **Apply body primer to exposed paint as shown.**

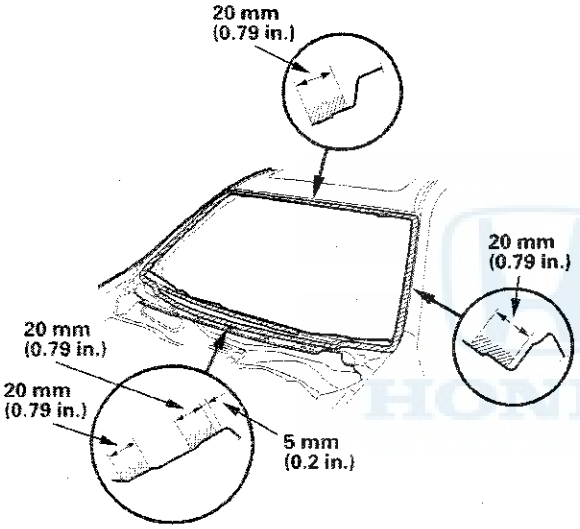

20. Cut a "V" in the end of the nozzle (A) on the adhesive cartridge as shown.

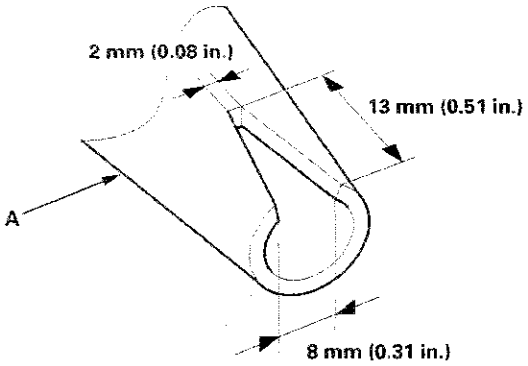

21. Put the cartridge in a caulking gun, and run a continuous bead of adhesive (A) around the windshield (B) along the edge of the molding (C) and the rubber dams (D) as shown. Apply adhesive within 30 minutes after applying the glass primer. Make a slightly thicker bead at each corner.

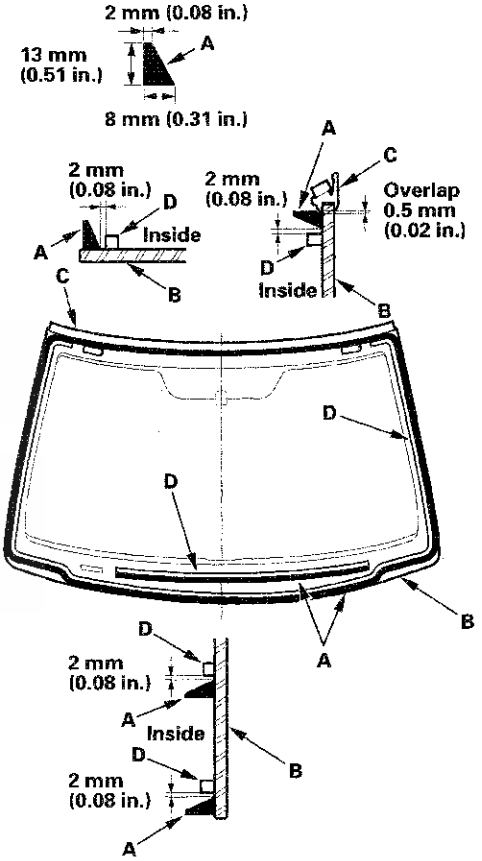

(cont'd)

Windshield Replacement (cont'd)

22. Use suction cups to hold the windshield over the opening, align it with the alignment marks made in step 16, and set it down on adhesive. Lightly push on the windshield until its edges are fully seated on adhesive all the way around.

    NOTE: Do not open or close any of the doors for about an hour until adhesive is dry.

23. Scrape or wipe the excess adhesive off with a putty knife or towel. To remove adhesive from a painted surface or the windshield, wipe with a soft shop towel dampened with isopropyl alcohol.

24. After adhesive has dried, spray water over the windshield and check for leaks. Mark leaking areas, and let the windshield dry, then seal with sealant. Let the vehicle stand for at least 4 hours after windshield installation. If the vehicle has to be used within the first 4 hours, it must be driven slowly.

25. Reinstall all remaining removed parts.

    NOTE: Advise the customer not to do the following things for 2 to 3 days:
    - Slam the doors with all the windows rolled up.
    - Twist the body excessively (such as when going in and out of driveways at an angle or driving over rough, uneven roads).

Rearview Mirror Harness Cover Base Replacement

4-door with Automatic Dimming Rearview Mirror

NOTE:
- Put on gloves to protect your hands.
- Wear eye protection while cutting the glass adhesive with piano wire.

1. Remove these items:
   - Headliner (see page 20-131)
   - Rearview mirror (see page 20-58)

2. Carefully cut through adhesive tape under the rearview mirror harness cover base using the piano wire, then remove the base.

3. Use a putty knife to scrape off all of old adhesive tape from the windshield. Clean the inside face of the windshield with isopropyl alcohol where the new rearview mirror harness cover base is to be applied. Make sure the bonding surface is kept free of water, oil and grease.

4. If the old rearview mirror harness cover base (A) will be reinstalled, use a putty knife to scrape off all of old adhesive tape from the base. Clean the base surface with isopropyl alcohol. Apply primer to the area where the new double-sided adhesive tape (B) will be applied to the base, and attach adhesive tape to the base.

Adhesive tape: Thickness 0.8 mm (0.031 in.)
Width 7 mm (0.28 in.)

: Apply primer here.

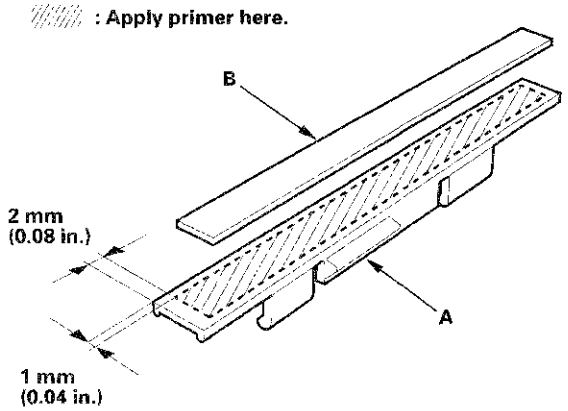

5. Before installing the rearview mirror harness cover base (A), apply primer to the area where the harness cover base will be applied to the inside face of the windshield. Let the primer dry at least 10 minutes, then attach the mirror to the windshield within 12 hours.

: Apply primer here.

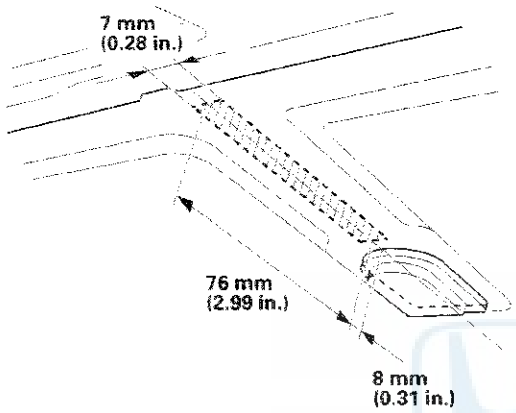

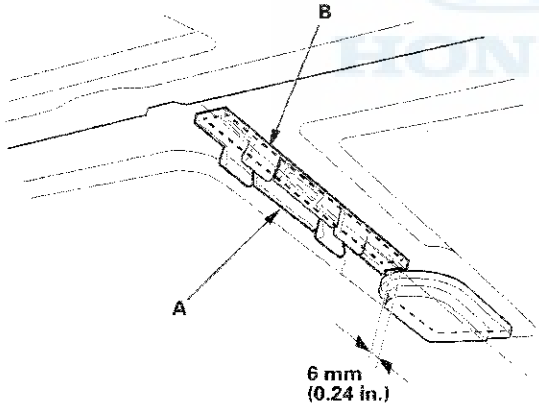

6. Attach the rearview mirror harness cover base with adhesive tape (B) to the inside face of the windshield as shown, then press adhesive portions into place securely.

7. Reinstall all remaining removed parts.

Rear Window Replacement

NOTE:
- Put on gloves to protect your hands.
- Wear eye protection while cutting the glass adhesive with a piano wire.
- Use seat covers to avoid damaging any surfaces.
- Do not damage the rear window defogger grid lines, window antenna grid lines, and terminals.

1. Remove these items:
   - Trunk lid
   - C-pillar trim, both sides:
     – 2-door (see page 20- 110)
     – 4-door (see page 20- 115)
   - Rear shelf (see page 20-119)

2. Disconnect the window antenna connectors (A) and rear window defogger connectors (B). 4-door is shown; 2-door is similar.

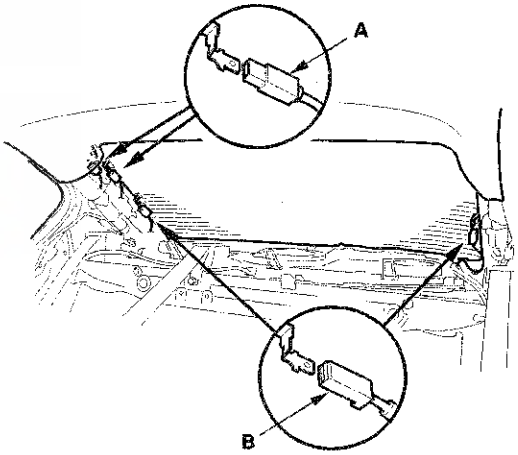

3. If the old rear window will be reinstalled, make alignment marks across the glass and the body with a grease pencil.

(cont'd)

Rear Window Replacement (cont'd)

4. Pull down the rear portion of the headliner (A) by detaching the clips. Take care not to bend the headliner excessively, or you may crease or break it. 4-door is shown; 2-door is similar.

Fastener Locations

▷ : **Clip, 2 (Gray)**

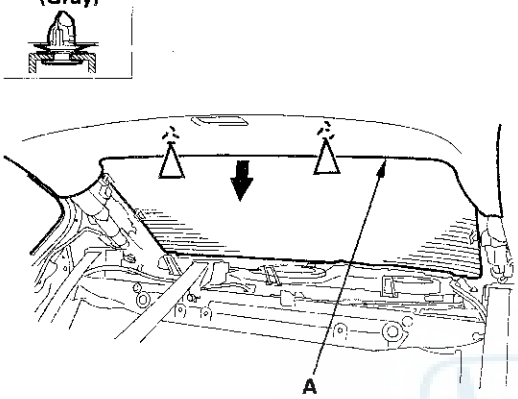

5. Apply protective tape along the inside and outside edges of the body. Using an awl, make a hole through adhesive from inside the vehicle at a corner of the rear window. Push a piece of piano wire through the hole, and wrap each end around a piece of wood.

6. Remove the lower rubber dam (A) from the lower edge of the rear window (B). If necessary, cut the rubber dam with a utility knife. 4-door is shown; 2-door is similar.

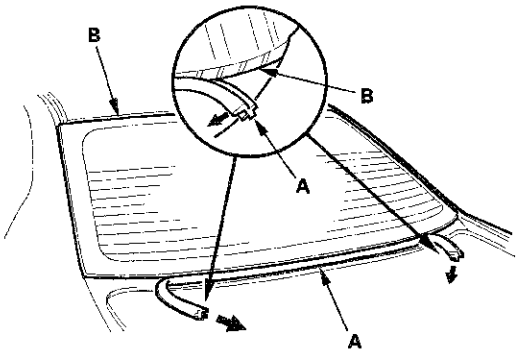

7. With a helper on the outside, pull the piano wire (A) back and forth in a sawing motion. Hold the piano wire as close to the rear window (B) as possible to prevent damage to the body, and carefully cut through the adhesive (C) around the entire rear window. 4-door is shown; 2-door is similar.

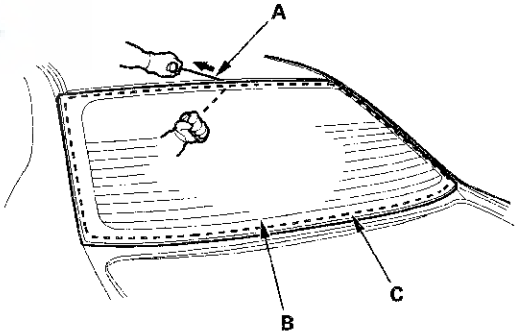

Cutting positions - 2-door

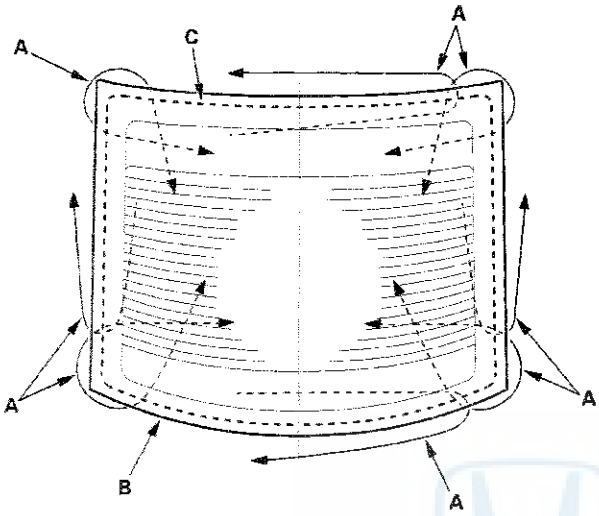

Cutting positions - 4-door

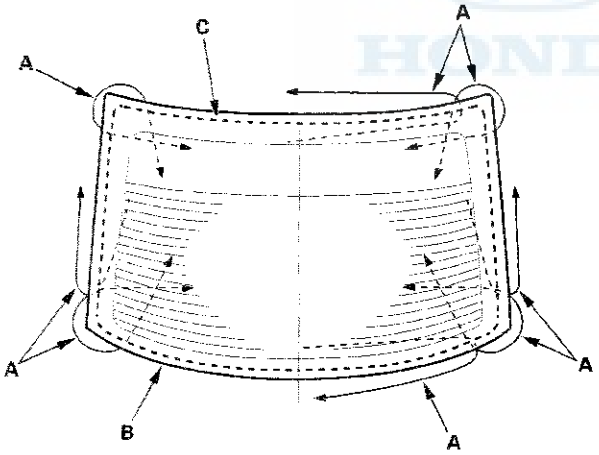

8. Carefully remove the rear window.

9. Use a putty knife to scrape old adhesive smooth to a thickness of about 2 mm (0.08 in.) on the bonding surface around the entire rear window opening flange:

   - Do not scrape down to the painted surface of the body; damaged paint will interfere with proper bonding.
   - Remove the fasteners from the body.

10. Clean the body bonding surface with a shop towel dampened in isopropyl alcohol. After cleaning, keep oil, grease, and water from getting on the surface.

11. If the old rear window will be reinstalled, use a putty knife to scrape off all of old adhesive, the fasteners, and the rubber dams from the rear window. Clean the inside face and the edge of the rear window with isopropyl alcohol where new adhesive will be applied. Make sure the bonding surface is kept free of water, oil, and grease.

(cont'd)

Rear Window Replacement (cont'd)

12. Apply primer to the edge of the rear window (A) where the lower rubber dam adhesive tape will be attached as shown. Attach the lower rubber dam (B) with adhesive tape (C) to the lower edge of the rear window:

    - After installing the rubber dam, cut the ends (D) of the rubber dam as shown.
    - Be careful not to touch the windshield where adhesive will be applied.
    - 4-door is shown; 2-door is similar.

    Lower rubber dam adhesive tape:
    Thickness 0.2 mm (0.008 in.)
    Width 4 mm (0.16 in.)

    : Apply primer here.

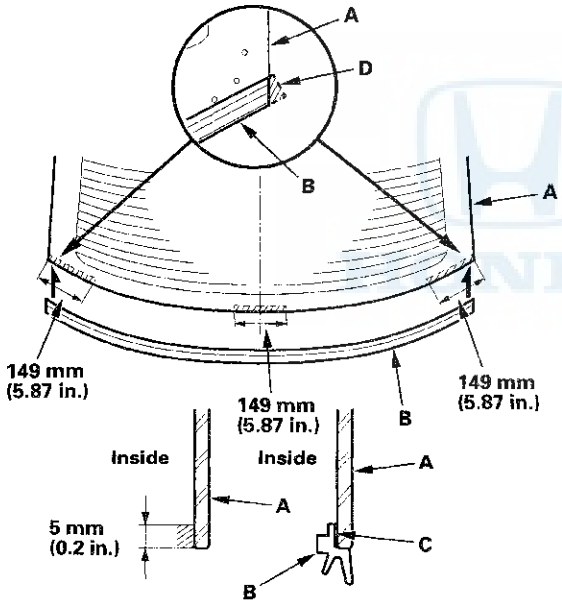

13. Attach the upper rubber dam (A), the side rubber dams (B), the upper clips (C), and the fasteners (D) with adhesive tape to the inside face of the rear window (E) as shown. Before installing the upper clips, apply primer to the area where adhesive tape will be applied to the inside face of the windshield:

    - First attach the upper rubber dam, then attach the side rubber dams around the edge of the rear window. Be sure the top of the side rubber dam contacts with the bottom of the upper rubber dam. If necessary, cut the excess rubber dams.
    - Be sure the upper clips and the fasteners line up with the alignment marks (F).
    - Be sure the convex portion (G) of the left and right clips face the right side.
    - Be careful not to touch the rear window where adhesive will be applied.

    Upper clip adhesive tape:
    Thickness 0.4 mm (0.016 in.)
    Width 10 mm (0.39 in.)
    Rubber dam adhesive tape:
    Thickness 0.16 mm (0.006 in.)
    Width 3.5 mm (0.14 in.)
    Fastener adhesive tape:
    Thickness 0.8 mm (0.03 in.)
    Width 7 mm (0.28 in.)

    2-door

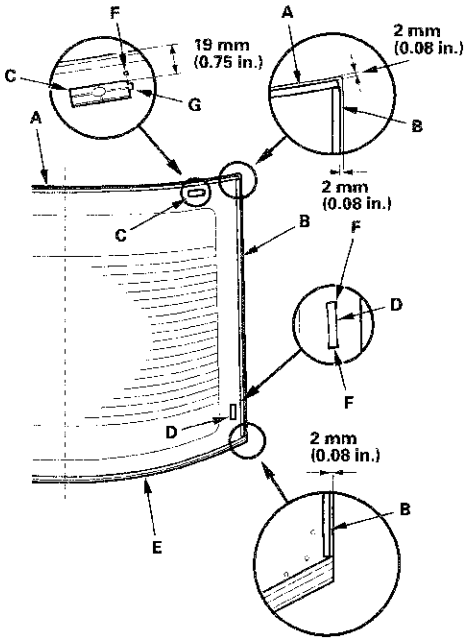

4-door

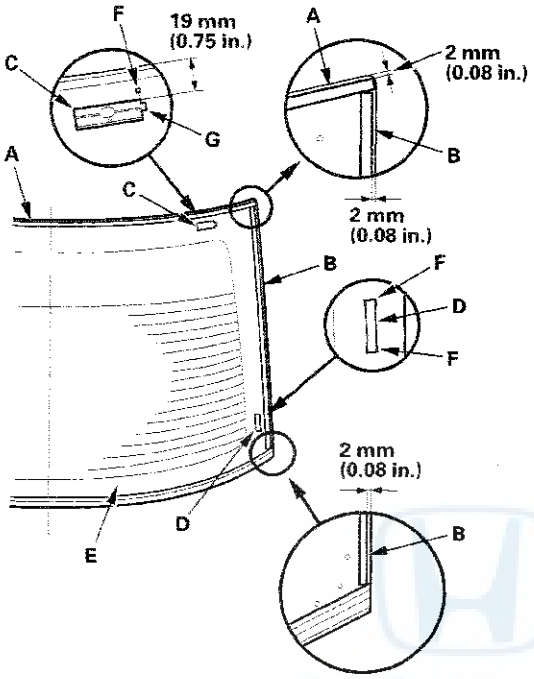

14. Attach the fasteners (A) with adhesive tape to the rear window opening flange (B) of the body on both sides.

Fastener adhesive tape:
Thickness 0.6 mm (0.024 in.)
Width 7.5 mm (0.3 in.)

2-door

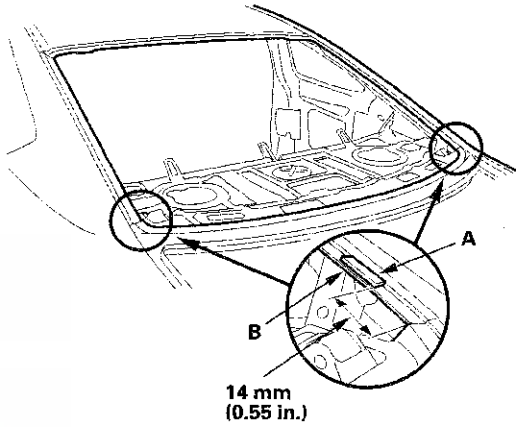

4-door

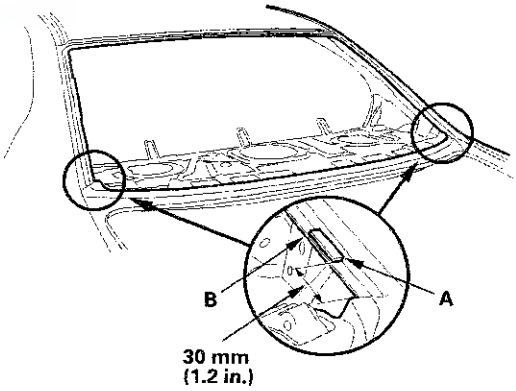

(cont'd)

Rear Window Replacement (cont'd)

15. Set the rear window in the opening, and center it. Make alignment marks (A) across the rear window and body with a grease pencil at the four points shown. Make sure the pins (B) of both upper clips (C) contact with the edge of the body holes. Be careful not to touch the rear window where adhesive will be applied. 4-door is shown; 2-door is similar.

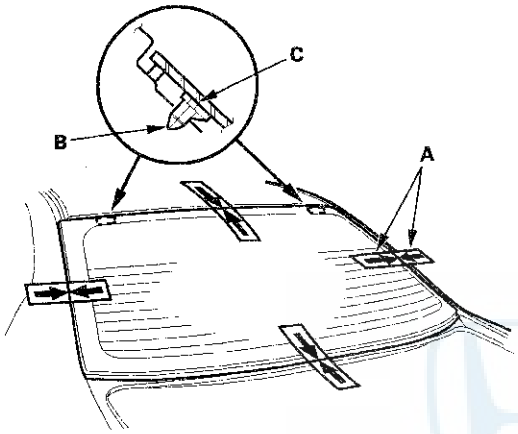

16. Remove the rear window.

17. With a sponge applicator, apply a light coat of glass primer to the rear window (A) along the edge of the rubber dams (B) as shown, then lightly wipe it off with gauze or cheesecloth:

- With the printed dots (C) on the rear window as a guide, apply the glass primer to both corner portions of the rear window.
- Do not apply body primer to the rear window, and do not get body and glass primer sponge applicators mixed up.
- Never touch the primed surfaces with your hands. If you do, adhesive may not bond to the rear window properly, causing a leak after the rear window is installed.
- Keep water, dust, and abrasive materials away from the primed surfaces.

2-door

: **Apply glass primer here.**

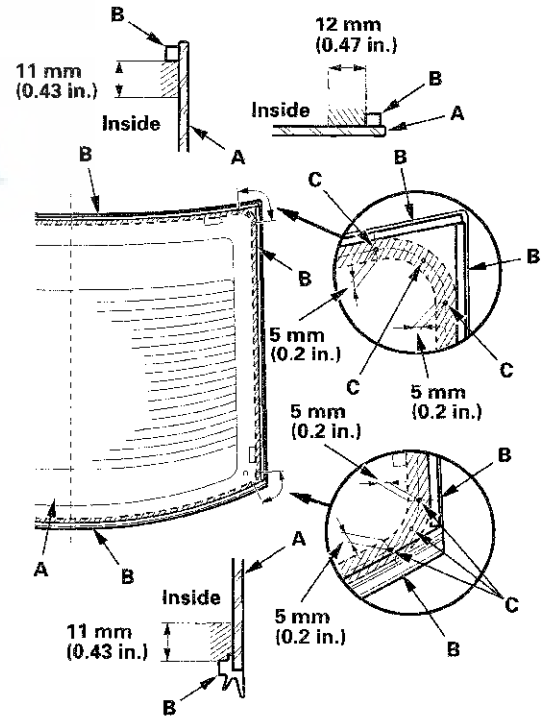

4-door

: Apply glass primer here.

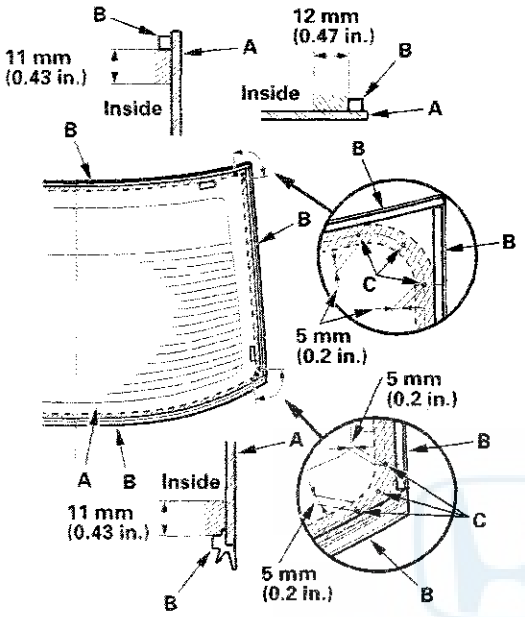

18. With a sponge applicator, carefully apply a light coat of body primer to any exposed paint or metal around the flange where new adhesive will be applied. Let the primer dry for at least 10 minutes:

- Do not apply body primer to any remaining original adhesive on the flange.
- Be careful not to mix up the body and glass primer sponge applicators.
- Never touch the primed surfaces with your hands.

2-door

: **Apply body primer to any exposed paint as shown.**

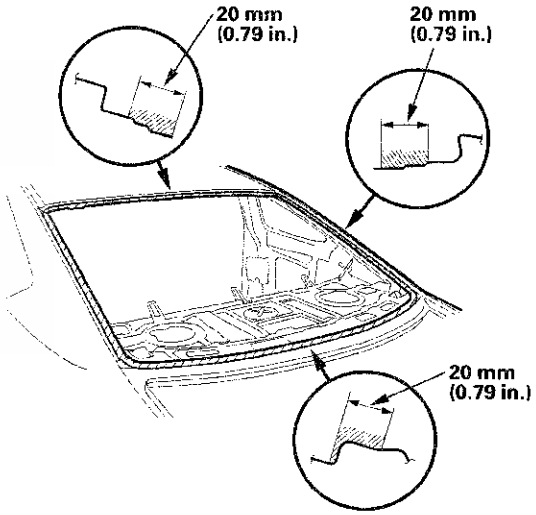

(cont'd)

Rear Window Replacement (cont'd)

4-door

: Apply body primer to any exposed paint as shown.

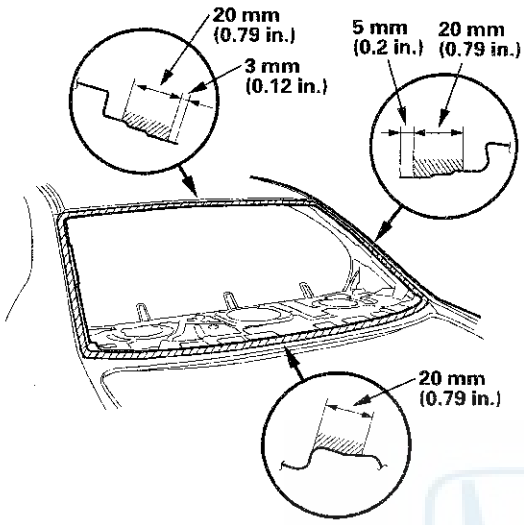

19. Cut a "V" in the end of the nozzle (A) on the adhesive cartridge as shown.

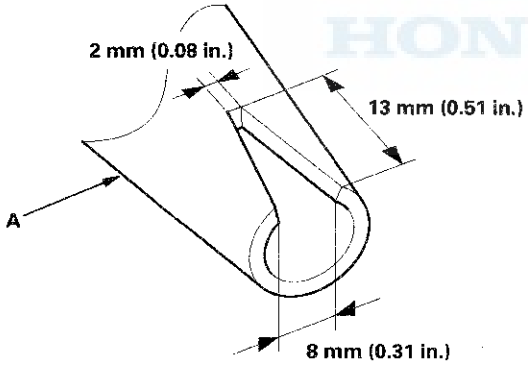

20. Put the cartridge on a caulking gun, and run a continuous bead of adhesive (A) to the rear window (B) along the edge of the rubber dams (C) as shown:

- With the printed dots (D) on the rear window as a guide, apply adhesive to both side portions of the rear window.
- Apply adhesive within 30 minutes after applying the glass primer. Make a slightly thicker bead at each corner.

2-door

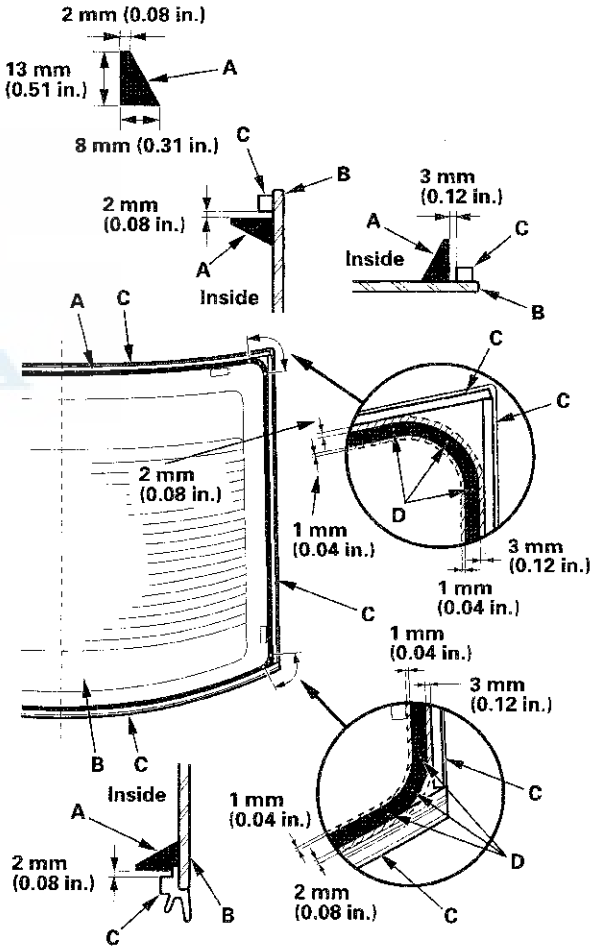

4-door

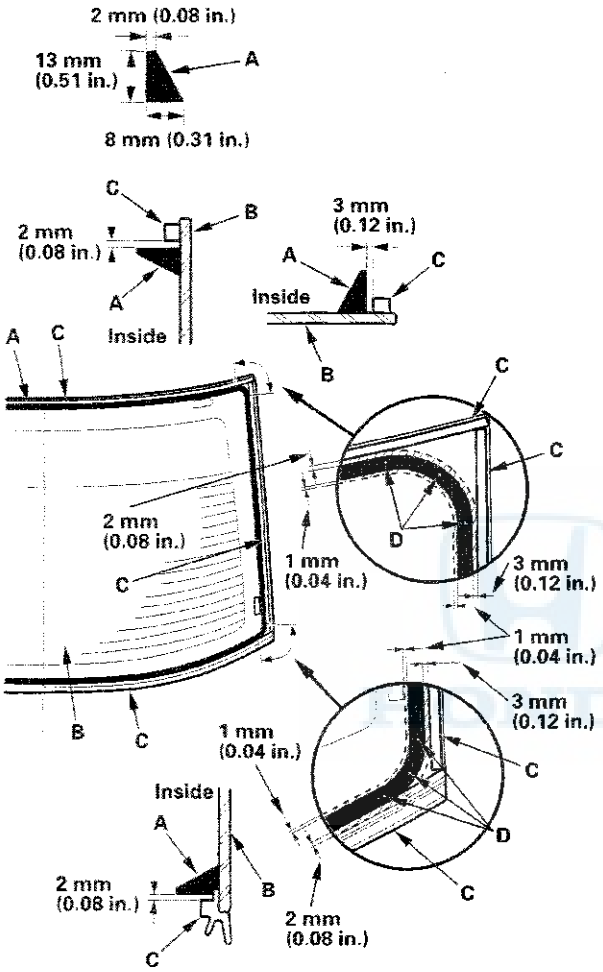

21. Use suction cups to hold the rear window over the opening, align it with the alignment marks you made in step 15, and set it down on adhesive. Lightly push on the rear window until its edges are fully seated on adhesive all the way around.

    NOTE: Do not open or close any of the doors for about an hour until adhesive is dry.

22. Scrape or wipe the excess adhesive off with a putty knife or towel. To remove adhesive from a painted surface or the rear window, use a soft shop towel dampened with isopropyl alcohol.

23. After adhesive has dried, spray water over the rear window and check for leaks. Mark the leaking areas, let the rear window dry, then seal with sealant. Let the vehicle stand for at least 4 hours after rear window installation. If the vehicle has to be used within the first 4 hours, it must be driven slowly.

24. Reinstall all remaining removed parts.

    NOTE: Advise the customer not to do the following things for 2 to 3 days:
    - Slam the doors with all the windows rolled up.
    - Twist the body excessively (such as when going in and out of driveways at an angle or driving over rough, uneven roads).

Quarter Glass Replacement

2-door

NOTE:
- Put on gloves to protect your hands.
- Wear eye protection when removing the glass with piano wire.
- Use seat covers to avoid damaging any surfaces.
- The quarter glass clips and the molding clips will need replacement because they will be damage during glass removal.

1. Remove these items:

   - C-pillar trim (see page 20-110)
   - Rear side trim panel (see page 20-118)
   - B-pillar upper trim (see page 20-105)

2. Remove the front seal (A) from the front edge of the quarter glass (B). If necessary, cut the seal with a utility knife.

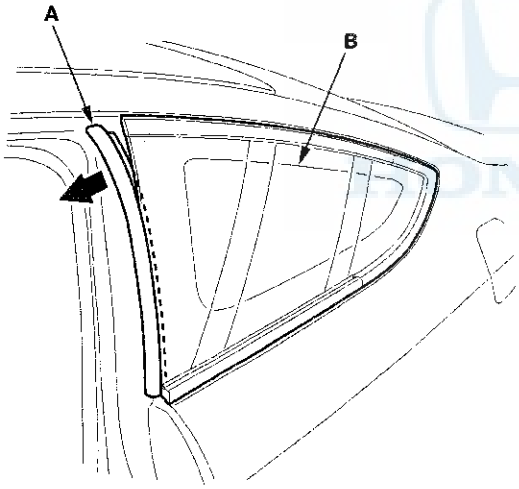

3. Apply protective tape along the inside and outside edges of the body. From pillar side the vehicle, use a utility knife (A) to cut the front clips (B) of the quarter glass molding (C).

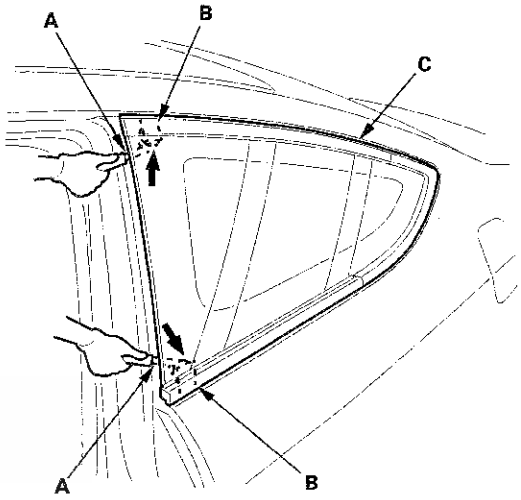

4. Using an awl, make a hole through adhesive from inside the vehicle at a front corner portion of the quarter glass. Push a piece of piano wire through the hole, and wrap each end around a piece of wood.

5. With a helper on the outside, pull the piano wire (A) back and forth in a sawing motion. Hold the piano wire as close to the quarter glass (B) as possible to prevent damage to the body, and carefully cut through the adhesive (C) in the straight areas and the front corners, but not the rear corner (D).

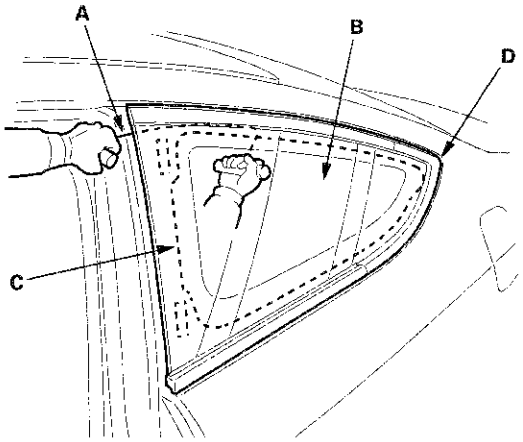

Cutting positions

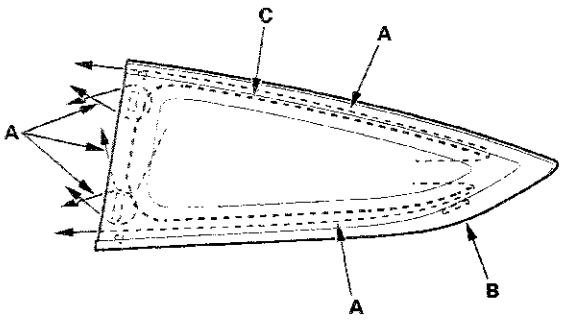

6. From inside the vehicle, cut through the adhesive (A) of quarter glass rear corner and the rear clip (B) with a utility knife (C).

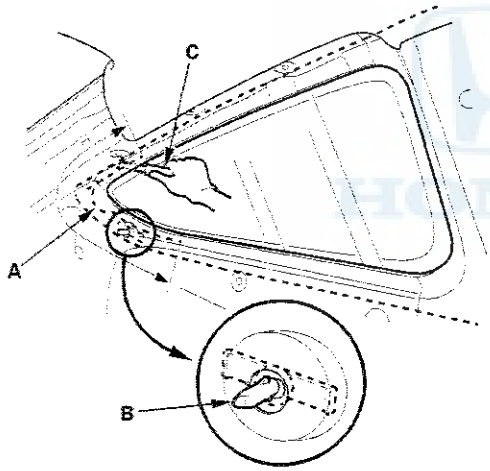

7. Use a putty knife to scrape old adhesive smooth to a thickness of about 2 mm (0.08 in.) on the bonding surface around the entire quarter glass opening flange:

   - Do not scrape down to the painted surface of the body; damaged paint will interfere with proper bonding.
   - Remove the clips from the body.

8. Clean the body bonding surface with a shop towel dampened in isopropyl alcohol. After cleaning, keep oil, grease, and water from getting on the surface.

9. Remove the quarter glass molding from the quarter glass. If the old quarter glass molding is to be reinstalled, replace the molding clips with new ones.

10. If the old quarter glass is to be reinstalled, use a putty knife to scrape off all of old adhesive and the damaged clips from the quarter glass. Clean the inside face and the edge of the quarter glass with isopropyl alcohol where new adhesive is to be applied. Make sure the bonding surface is kept free of water, oil, and grease.

(cont'd)

Quarter Glass Replacement (cont'd)

11. Attach the front seal (A), the upper clip (B), the lower clip (C), and the rear clip (D) with adhesive tape to the inside face of the quarter glass (E) as shown. Before installing the front seal, apply primer to the inside face of the quarter glass.

    - Be careful not to touch the glass where adhesive will be applied.
    - Be sure to install the upper clip and rear clip with their convex portions (F) downward.
    - Be sure to install the lower clip with its convex portion (G) upward.

    Clip adhesive tape:
    Thickness 1.2 mm (0.047 in.)
    Width 10 mm (0.39 in.)
    Front seal adhesive tape:
    Thickness 0.16 mm (0.006 in.)
    Width 3.5 mm (0.14 in.)

    : Apply primer here.

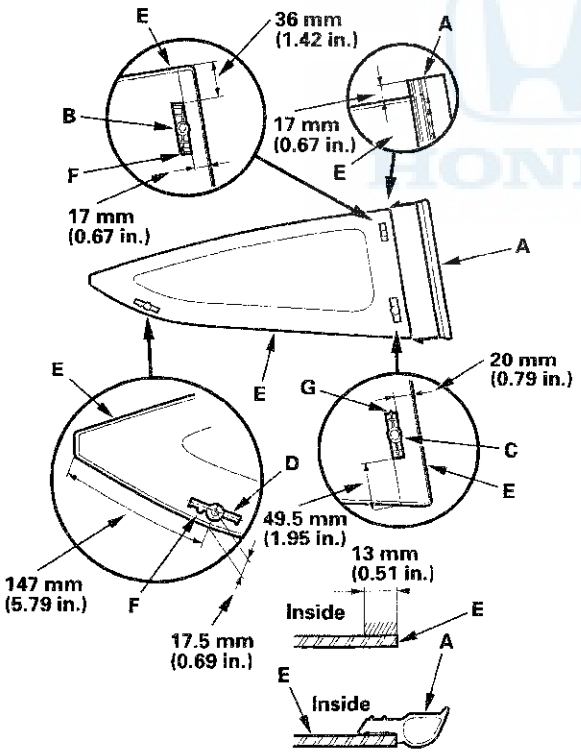

12. Install the quarter glass molding (A).

    -1 Hold the molding up on the glass, and fit the hooks (B) of the molding to the edge of the glass rear corner first.
    -2 From the rear corner to the front, hook the lower clips (C) and upper clips (D) of the molding to along the edges of the glass.
    -3 Push the molding into place securely.

    NOTE:
    - Take care not to bend or damage the molding.
    - Be careful not to touch the glass where adhesive will be applied.
    - Be sure the front seal contacts the upper and lower ends of the molding.

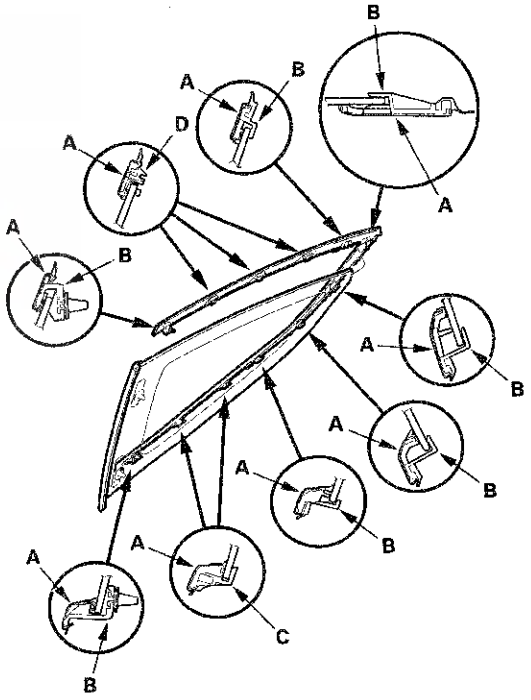

13. With a sponge applicator, apply a light coat of glass primer along the edge of the quarter glass (A) and the front seal (B) as shown, then lightly wipe it off with gauze or cheesecloth:

- With the printed dots (C) on the quarter glass as a guide, apply the glass primer to the rear corner, upper corner and lower corner portions of the quarter glass.
- Do not apply body primer to the quarter glass, and do not get body and glass primer sponge applicators mixed up.
- Never touch the primed surfaces with your hands. If you do, adhesive may not bond to the quarter glass properly, causing a leak after the quarter glass is installed.
- Keep water, dust, and abrasive materials away from the primed surfaces.

: **Apply glass primer here.**

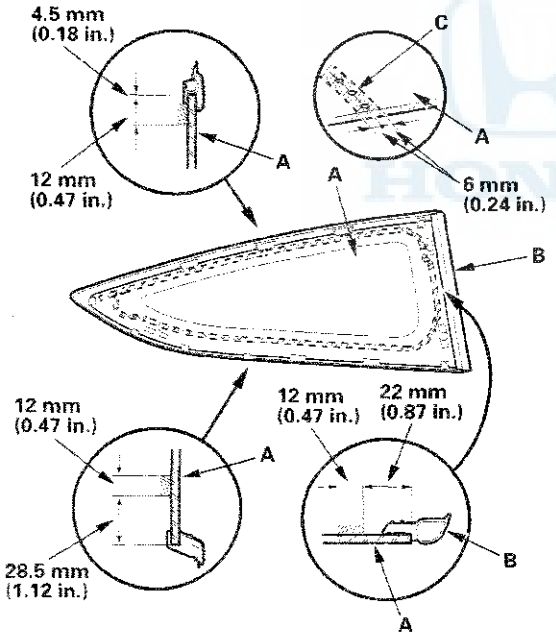

14. With a sponge applicator, carefully apply a light coat of body primer to any exposed paint or metal around the flange where new adhesive will be applied. Let the primer dry for at least 10 minutes:

- Do not apply body primer to any remaining original adhesive on the flange.
- Be careful not to mix up the body and glass primer sponge applicators.
- Never touch the primed surfaces with your hands.

: **Apply body primer to any exposed paint as shown.**

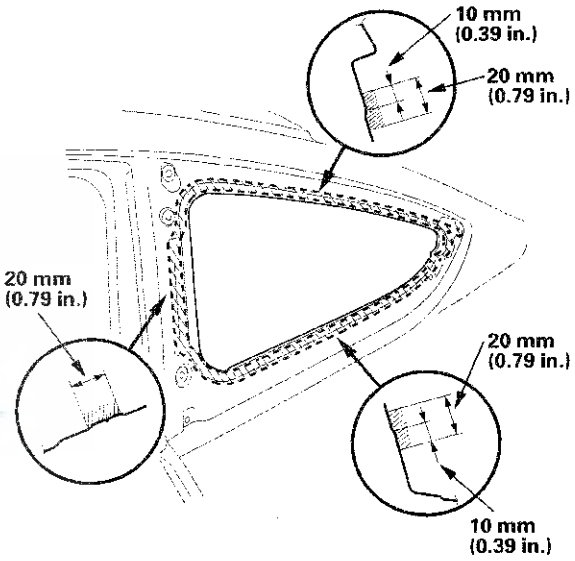

15. Cut a "V" in the end of the nozzle (A) on the adhesive cartridge as shown.

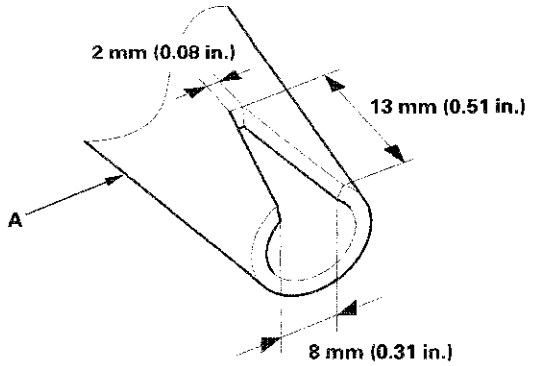

(cont'd)

Quarter Glass Replacement (cont'd)

16. Put the cartridge in a caulking gun, and run a bead of adhesive (A) around the edge of the quarter glass (B) and along the front seal (C) as shown. With the printed dots on the quarter glass as a guide, apply adhesive to the rear corner, upper corner and lower corner portions of the quarter glass. Apply adhesive within 30 minutes after applying the glass primer. Make a slightly thicker bead at each corner.

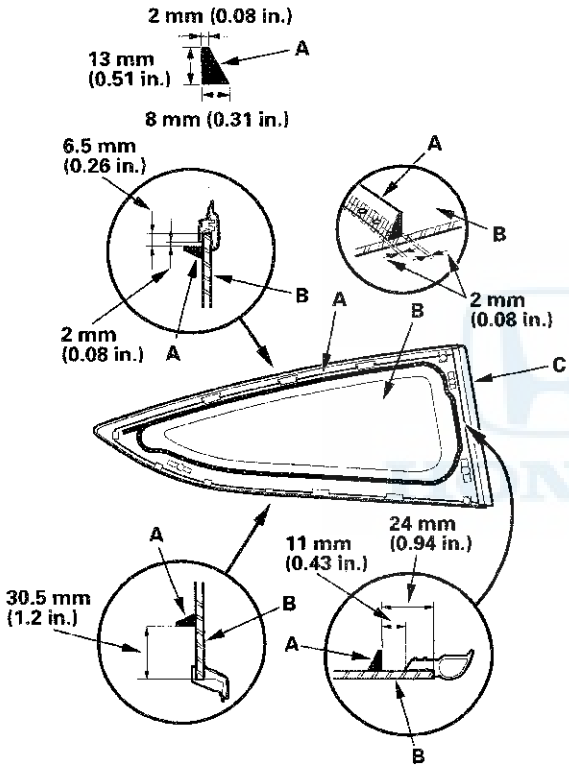

17. Use suction cups (A) to hold the quarter glass (B) over the opening, align it with the clips (C), and set it down on adhesive. Lightly push on the quarter glass until its edges are fully seated on adhesive all the way around.

    NOTE: Do not open or close any of the doors for about an hour until adhesive is dry.

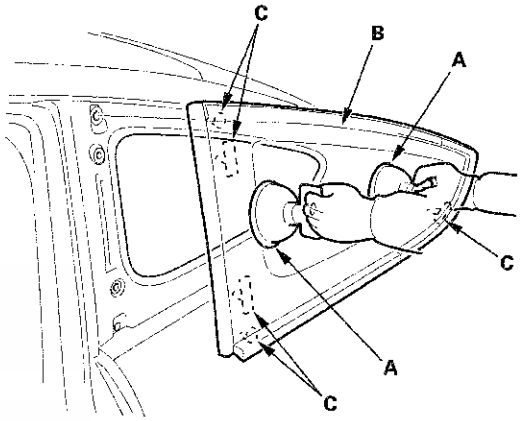

18. Scrape or wipe the excess adhesive off with a putty knife or towel. To remove adhesive from a painted surface or the quarter glass, use a soft shop towel dampened with isopropyl alcohol.

19. After adhesive has dried, spray water over the quarter glass and check for leaks. Mark the leaking areas, let the quarter glass dry, then seal with sealant. Let the vehicle stand for at least 4 hours after quarter glass installation. If the vehicle has to be used within the first 4 hours, it must be driven slowly.

20. Reinstall all remaining removed parts.

    NOTE: Advise the customer not to do the following things for 2 to 3 days:
    - Slam the doors with all the windows rolled up.
    - Twist the body excessively (such as when going in and out of driveways at an angle or driving over rough, uneven roads).

Component Location Index

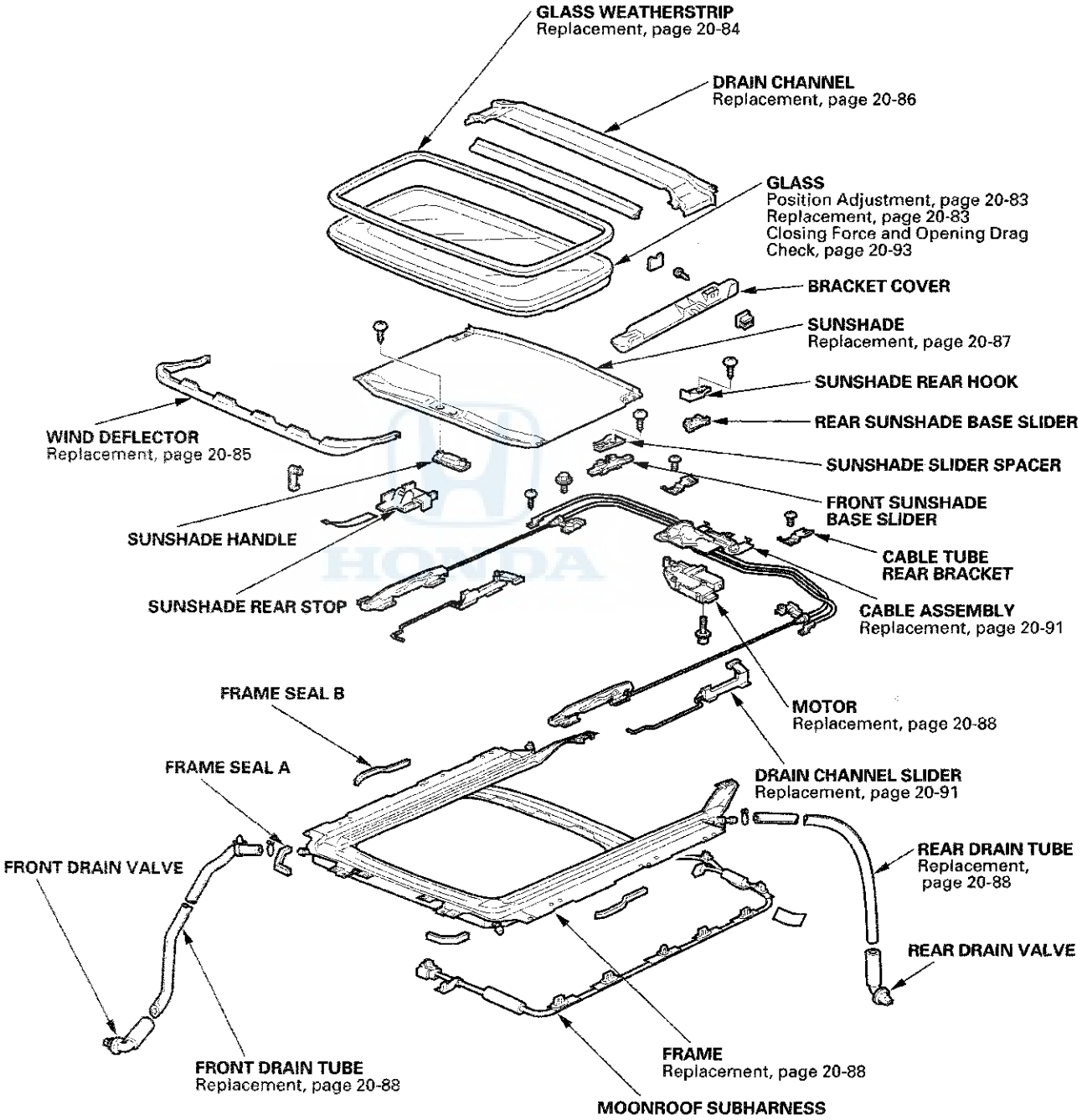

Symptom Troubleshooting Index

Symptom	Diagnostic procedure
Water leaks from moonroof	1. Check for a clogged drain tube. 2. Check for a gap between the glass weatherstrip and the roof panel (see page 20-83). 3. Check for a defective or an improperly installed glass weatherstrip or drain channel. 4. Check for a gap between the drain seal and the roof panel. 5. Adjust the moonroof position.
Wind noise from moonroof	1. Check for excessive clearance between the glass weatherstrip and the roof panel. 2. Adjust the moonroof position.
Motor noise from moonroof	1. Check for a loose motor. 2. Check for a worn gear or bearing. 3. Check for a deformed cable assembly. 4. Check for dirt or debris.
Moonroof glass does not move, but motor turns	1. Check for foreign matter stuck between the guide rail and the slider. 2. Make sure the cable assembly is attached properly. 3. Check for a loose inner cable. 4. Check for a defective gear or inner cable.
Moonroof glass does not move and motor does not turn (glass can be moved with 4 mm hexagonal wrench)	1. Check for a run down battery. 2. Check for a blown fuse. 3. Check for a faulty moonroof switch. 4. Check for a defective motor control unit.
Moonroof glass does not stop at proper flush closed position	1. Reset the moonroof control unit (see page 22-342). 2. Check glass position adjustment.
Moonroof glass moves in a jerking motion (moves 40 mm (1.57 in.), stops for 0.4 seconds, and repeats)	Reset the moonroof control unit (see page 22-342).
During auto close operation, moonroof glass reverses when no object is trapped	1. Check for dirt and debris in the track. 2. Reset the moonroof control unit (see page 22-342).
Moonroof glass moves, but there is no AUTO function	Reset the moonroof control unit (see page 22-342).

HONDA

Glass Position Adjustment

The roof panel (A) should be even with the glass weatherstrip (B), to within 0+1/−1 mm (0+0.04/−0.04 in.) all the way around. If not, make the following adjustment:

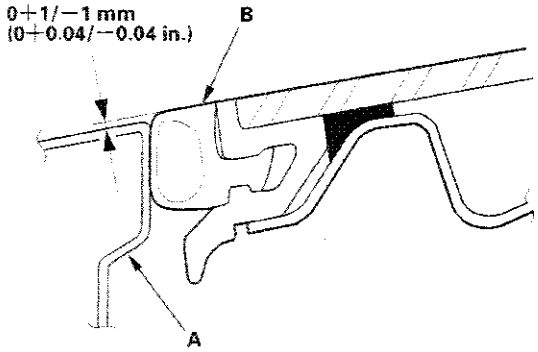

1. Remove the bracket cover.
2. Adjust the glass (A).
   - -1 Using a TORX T25 bit, slightly loosen the bolts.
   - -2 Move the glass up or down.
   - -3 Tighten all bolts securely.

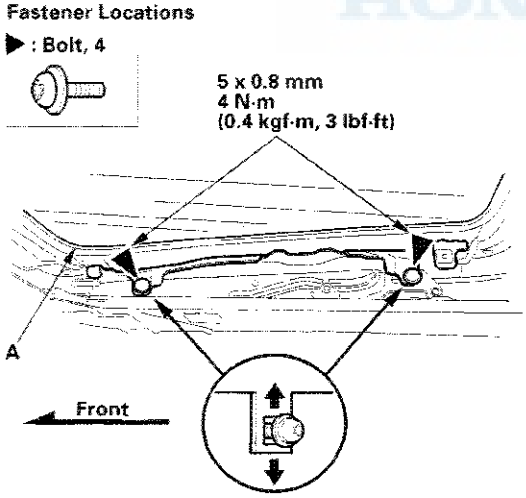

3. If necessary, repeat on the opposite side.
4. Reset the moonroof control unit (see page 22-342).

Glass Replacement

1. Close the glass fully.
2. Slide the sunshade all the way back.
3. Pry out the lid (A), remove the screw (B), and release the hooks (C), then remove the bracket cover (D). Repeat on the opposite side. Use a TORX T25 bit to remove the bolts (E) from the glass brackets (F) on both sides.

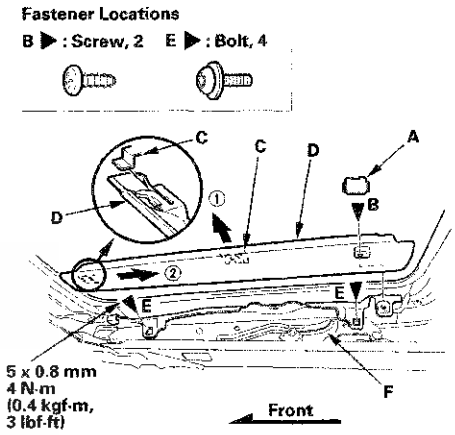

4. Remove the glass (A) by lifting it up. Do not damage the roof panel.

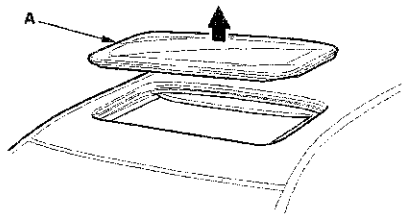

5. Install the glass in the reverse order of removal, then do these items:
   - Do the glass position alignment procedure (see page 20-83).
   - Reset the moonroof control unit (see page 22-342).
6. Check for water leaks. Use free-flowing water from a hose without a nozzle. Do not use high-pressure water.

   NOTE: It is normal for some water to seep past the moonroof into the moonroof frame, and exit through the drains.

Glass Weatherstrip Replacement

1. Remove the moonroof glass (see page 20-83).

2. Place a piece of masking tape (A) on the middle of the front edge of the moonroof glass (B). Make sure that the tape is on the glass only and not touching the soft rubber of the weatherstrip.

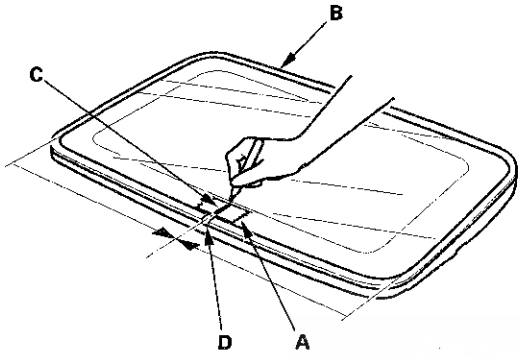

3. Place a mark (C) on the masking tape that aligns with the seam (D) of the weatherstrip.

4. Push down on the top of the old weatherstrip with your thumb until a small section separates from the moonroof glass. Once a section has started to separate, grip it and pull outward, working around the moonroof glass until the weatherstrip is completely removed (note the locations of the holes in the weatherstrip).

5. Align the seam (A) of the new weatherstrip (B) to the mark (C) on the masking tape (D). Make sure the holes are pointed in the same direction as noted in step 4.

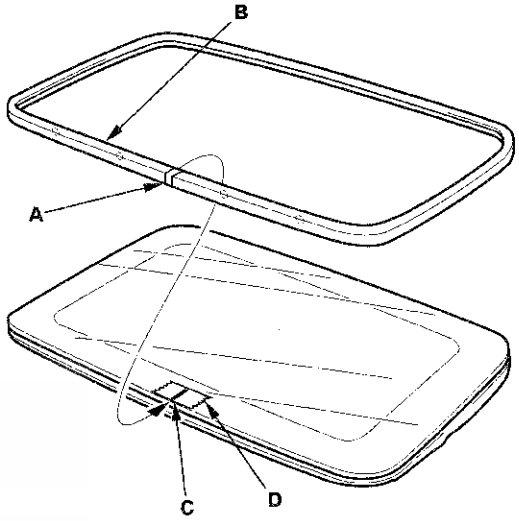

6. Press the ridge of the new weatherstrip into the groove on the moonroof glass where the masking tape is marked. Work toward one corner; then go back to the middle and work toward the opposite corner. Be careful not to stretch the weatherstrip.

7. Continue pressing along one side, from corner to corner; then press along the opposite side, from corner to corner.

8. At the rear of the moonroof glass, continue pressing from one corner to the middle; then press from the opposite corner to the middle until the strip is completely installed.

9. Reinstall the moonroof glass (see page 20-83).

10. Check for proper fit of the new weatherstrip by opening and closing the moonroof.

Wind Deflector Replacement

1. Open the glass fully.
2. Remove the links (A) from both sides.

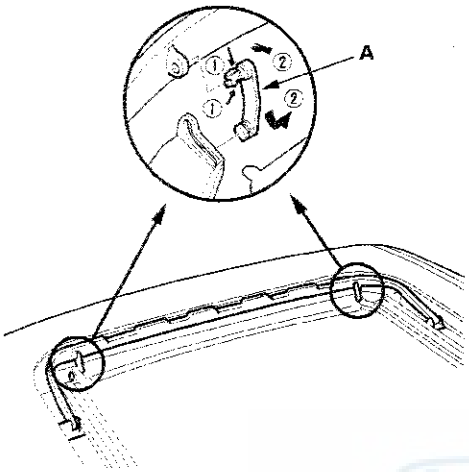

3. Remove the wind deflector (A).

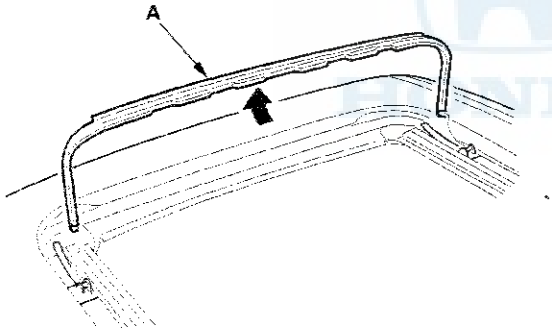

4. Pry up on the deflector bases (A), and release the hooks (B), then remove the bases with springs (C) from both sides.

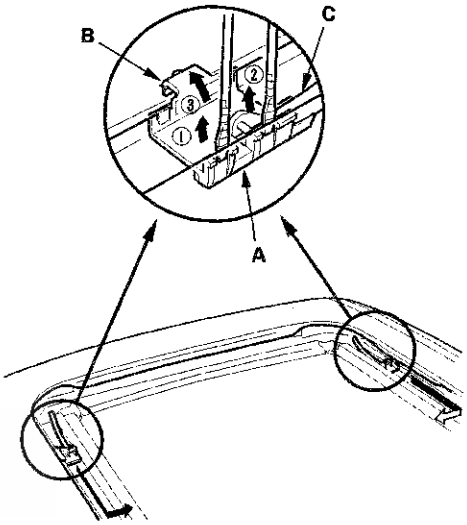

5. Install the deflector in the reverse order of removal.
6. Reset the moonroof control unit (see page 22-342).

Drain Channel Replacement

1. Remove the moonroof glass (see page 20-83).

2. With the moonroof switch, move both glass brackets (A) to the position where the moonroof normally tilts up and disconnect the drain channel rods (B) on both sides.

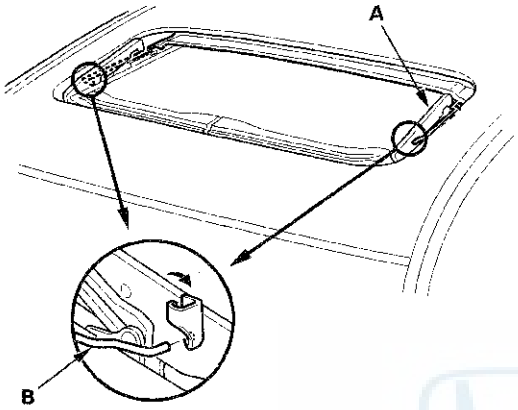

3. Slide the drain channel (A) forward.

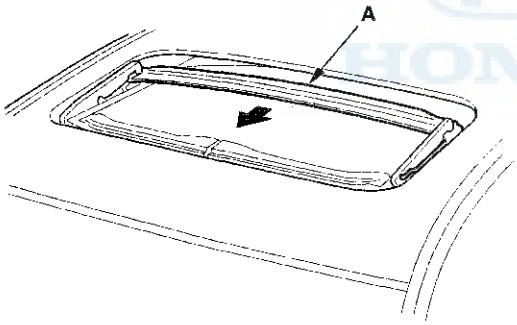

4. Pull the rear edge of the drain channel (A) up while pushing both clips (B), and release the channel from both hooks (C) of the drain channel slider by pulling it rearward.

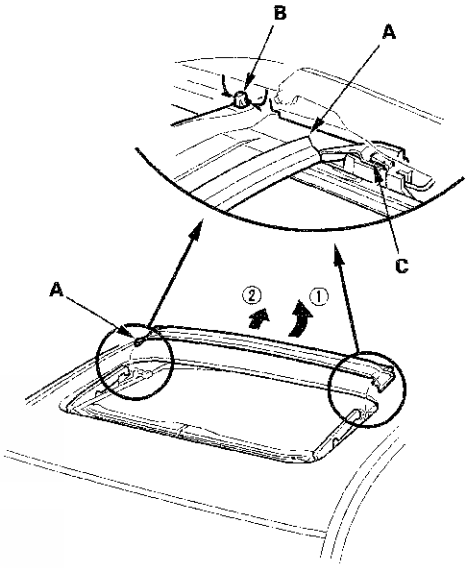

5. Remove the drain channel.

6. Install the channel in the reverse order of removal, and note these items:

   - Push the clip portions into place securely.
   - Check the glass position adjustment (see page 20-83).

7. Check for water leaks. Let the water run freely from a hose without a nozzle. Do not use a high-pressure spray.

Sunshade Replacement

1. Remove the drain channel (see page 20-86).

2. Slide the sunshade (A) until you can see both sunshade slider spacers (B).

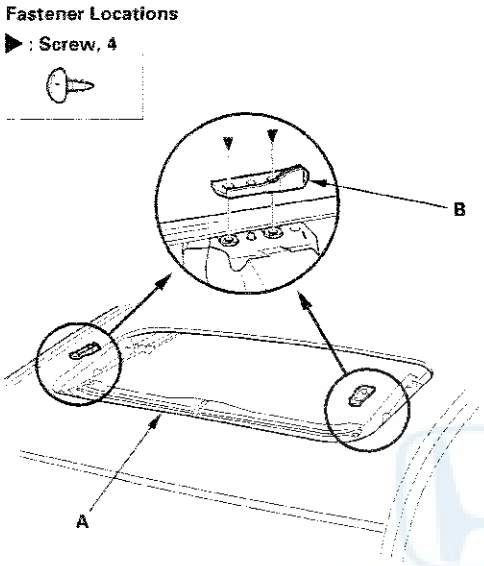

3. Remove the screws, then remove both spacers.

4. While lifting the front portion of the sunshade (A), move the sunshade forward until you can see both sunshade rear hooks (B). Do not damage the sunshade and the hooks.

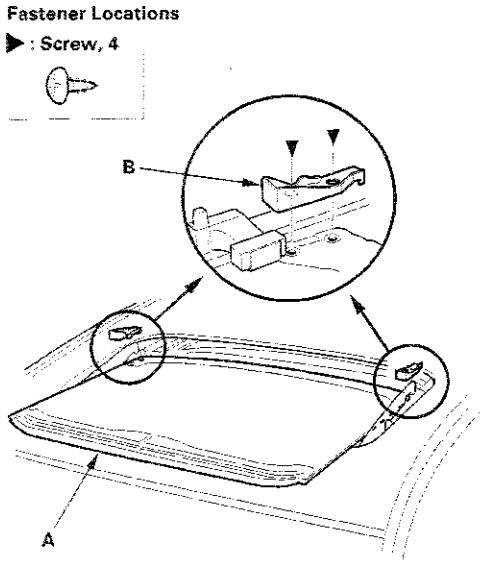

5. Remove the screws, then remove both hooks.

6. Remove the sunshade (A).

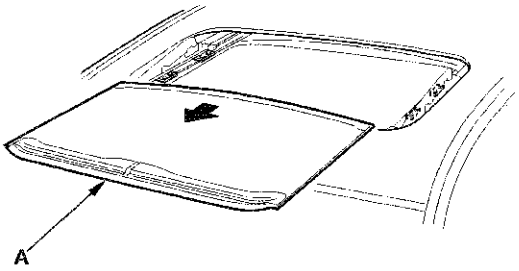

7. Remove both front sunshade base sliders (A) and both rear sunshade base sliders (B).

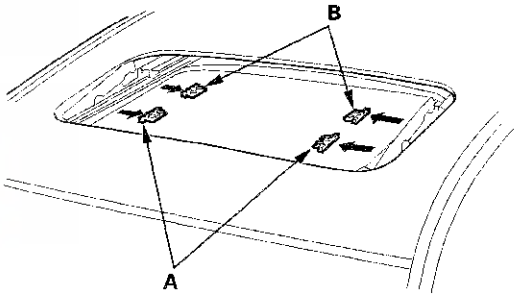

8. Install the sunshade in the reverse order of removal, and note these items:

   - Check the glass position adjustment (see page 20-83).
   - Reset the moonroof control unit (see page 22-342).

9. Check for water leaks. Let the water run freely from a hose without a nozzle. Do not use a high-pressure spray.

Motor Replacement

1. Remove the headliner (see page 20-131).

2. Put on gloves to protect your hands. Disconnect the connector (A), and remove the screws, then remove the motor (B).

Fastener Locations

▶ : Screw, 3

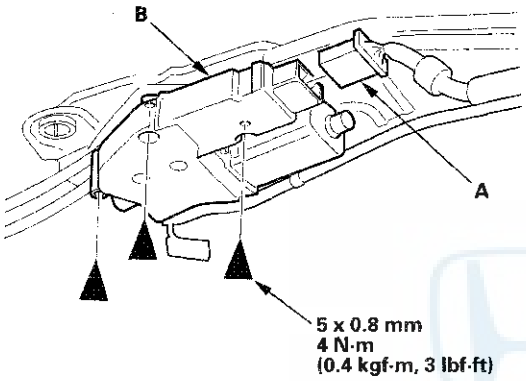

3. Install the motor in the reverse order of removal, and note these items:

   - Make sure the connector is plugged in properly.
   - Reset the moonroof control unit (see page 22-342).
   - Check the motor operation.

Frame and Drain Tube Replacement

SRS components are located in this area. Review the SRS component locations, 2-door (see page 24-21), 4-door (see page 24-19) and the precautions and procedures (see page 24-23) before doing repairs or service.

1. Remove these items:

   - Headliner (see page 20-131)
   - Moonroof glass (see page 20-83)

2. Disconnect the drain tubes (A).

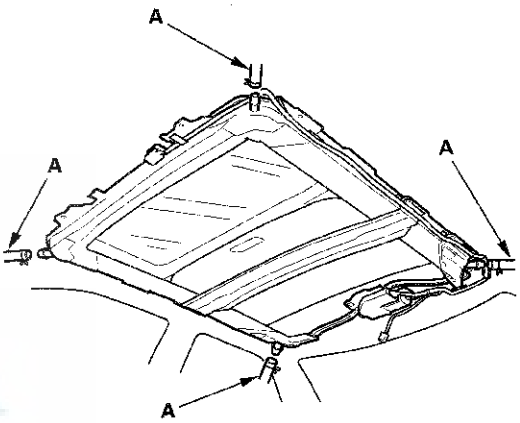

3. With an assistant holding the frame (A), remove the bolts (B, C) starting at the rear, and release the rear hooks (D) by moving the frame forward.

2-door

Fastener Locations

B ▶ : Bolt, 8 C ▶ : Bolt, 1

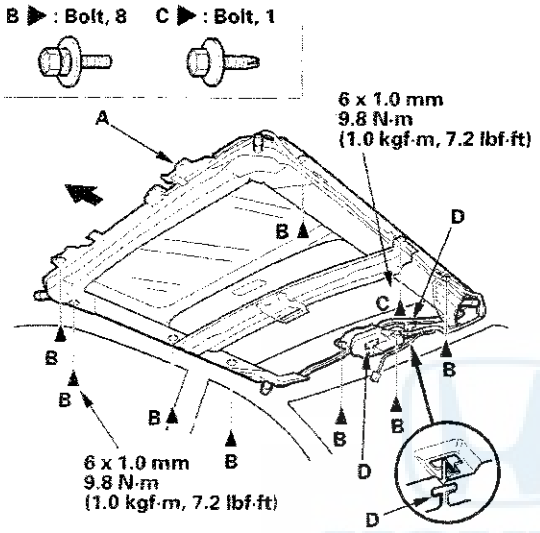

4-door

Fastener Locations

B ▶ : Bolt, 9

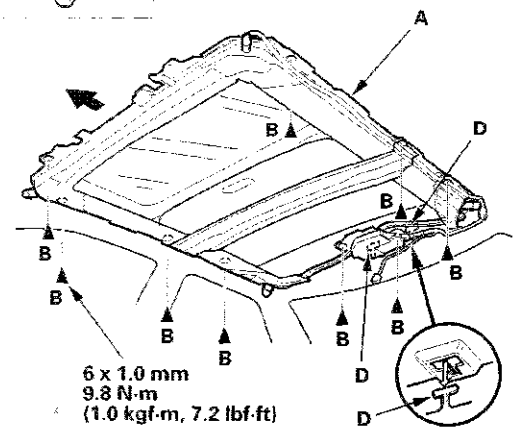

4. With the help of an assistant, carefully remove the frame through the front door opening. Take care not to scratch the interior trim and body, or tear the seat covers.

Front Drain Tube

5. Remove these items:

   - Front door sill trim
     - 2-door (see page 20-97)
     - 4-door (see page 20-99)
   - Kick panel
     - 2-door (see step 5 on page 20-98)
     - 4-door (see step 5 on page 20-99)

6. Remove these items from the passenger's side:

   - Glove box (see page 20-161)
   - Stereo amplifier (see page 23-115)

7. Detach the clip (A) securing the front drain tube (B). To remove a front drain valve (C) from the body, tie a string to the top end of the drain tube, then pull the drain tube down out of the A-pillar. Leave the string in the pillar to use when reinstalling the drain tube.

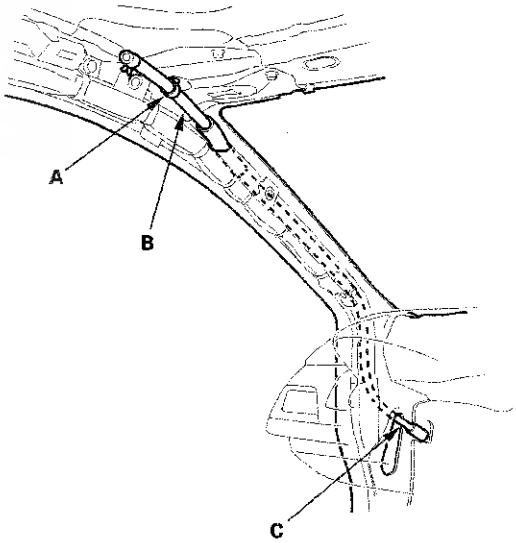

(cont'd)

Frame and Drain Tube Replacement (cont'd)

Rear Drain Tube

8. Remove these items from the trunk compartment (see page 20-123):

   - Spare tire lid
   - Trunk rear trim panel
   - Trunk rear side trim panel

9. Detach the clip (A) securing the rear drain tube (B) (2-door). To remove a rear drain valve (C) from the body, tie a string to the top end of the rear drain tube, then pull the drain tube down out of the C-pillar. Leave the string in the pillar to use when reinstalling the drain tube.

2-door

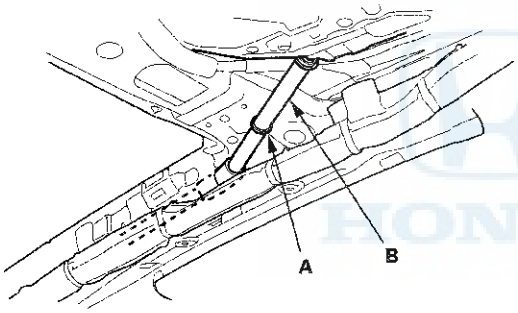

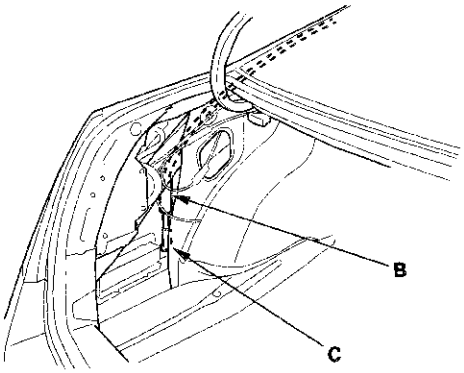

4-door

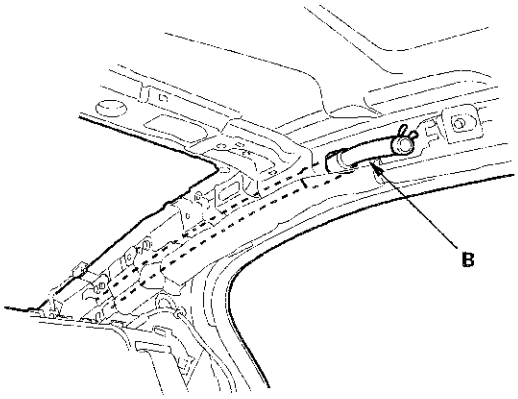

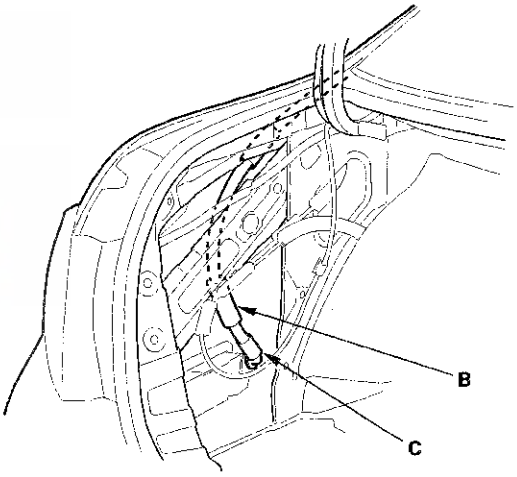

10. Install the frame and the drain tube in the reverse order of removal, and note these items:

    - Before installing the frame, clear the drain tubes and the drain valves using compressed air.
    - When installing, tie the string that was left in the pillar to the top end of the new drain tube and pull it up into the roof.
    - Check the frame seal.
    - Clean the surface of the frame.
    - When installing the frame, first attach the rear hooks into the body holes.
    - Make sure the connectors are plugged in properly.
    - When connecting the drain tube, slide it over the frame nozzle at least 10 mm (0.39 in.).
    - Install the tube clip (A) on the drain tube (B) as shown.
    - After all parts are installed, including the headliner, reset the moonroof control unit (see page 22-342).
    - Do the glass position alignment procedure (see page 20-83).

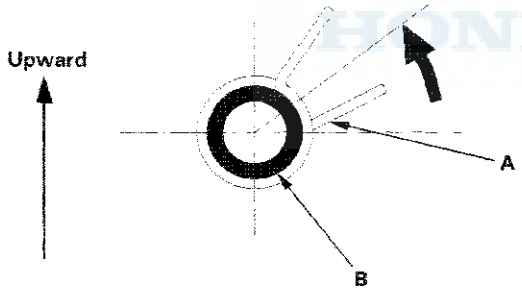

11. Check for water leaks. Let the water run freely from a hose without a nozzle. Do not use a high-pressure spray.

Drain Channel Slider and Cable Assembly Replacement

1. Remove the frame (see page 20-88).

2. Remove these parts from the frame:

    - Sunshade (see page 20-87)
    - Moonroof motor (see page 20-88)

3. Remove the aluminum tape (A). 4-door: Detach the clips (B) securing the moonroof subharness (C). 4-door is shown; 2-door is similar.

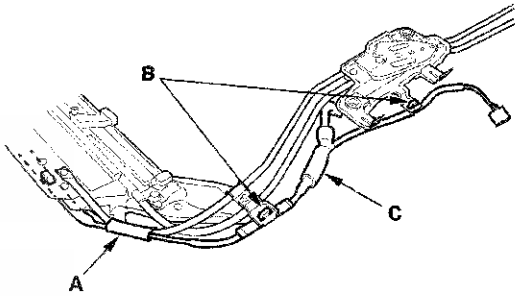

4. Put on gloves to protect your hands. Remove the screws (A, B) securing the cable tube rear brackets (C). Remove the cable tube side bracket mounting bolts (D) and the cable tube mounting screws (E) from both sides of the frame (F). 4-door is shown; 2-door is similar.

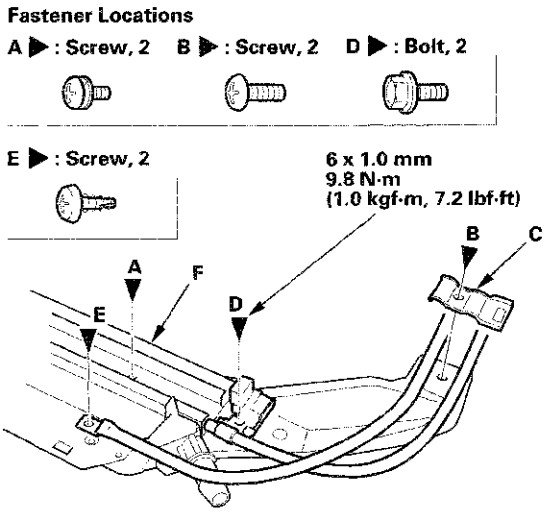

(cont'd)

Drain Channel Slider and Cable Assembly Replacement (cont'd)

5. Turn both cable tube side brackets (A) up to release the hooks (B) from the holes in both sides of the frame.

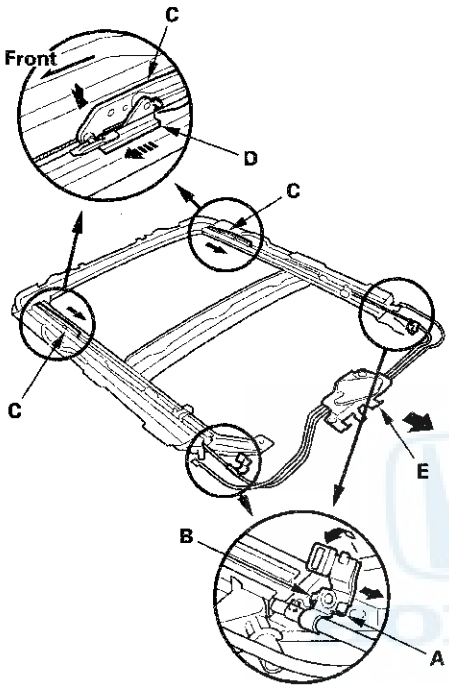

6. Pivot the glass brackets (C) down by sliding the link lifters (D) back, then slide both glass brackets back with the link lifters.

7. Slide the cable assembly (E) half-way back.

8. Remove the drain channel sliders (A) from both sides.

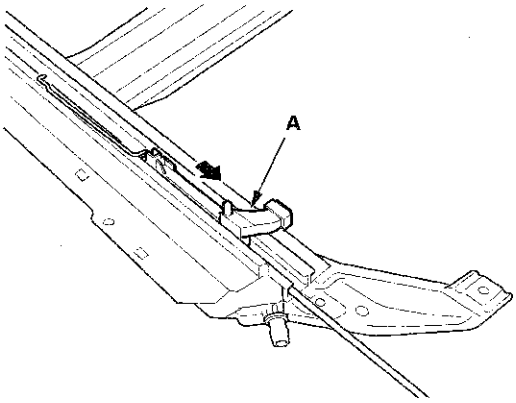

9. Slide the cable assembly (A) and both glass brackets (B) back, remove the deflector sliders (C) from both glass brackets, then remove them from the frame (D).

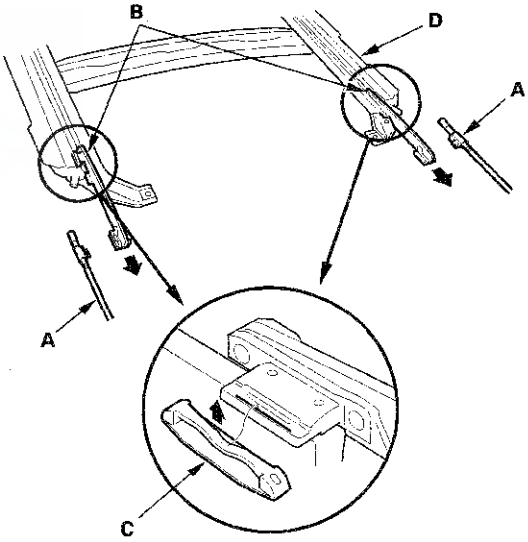

10. Install the slider and cable assembly in the reverse order of removal, and note these items:

- Damaged parts should be replaced.
- Apply multipurpose grease to the glass bracket (A) and the guide rail portion of the frame (B) indicated by the arrows.
- Before reinstalling the motor, make sure both link lifters are parallel, and in the tilt-up position.
- Before reinstalling the motor, install the frame and the glass, then check the opening drag (see page 20-93).
- After reinstalling the motor, reset the moonroof control unit (see page 22-342).

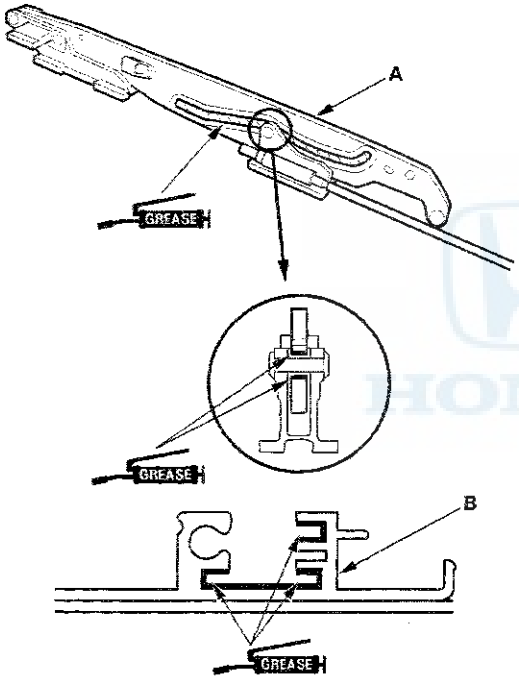

Closing Force and Opening Drag Check

1. Remove the headliner (see page 20-131).

2. Closing force check:

- With a shop towel (A) on the leading edge of the glass (B), attach a spring scale (C) as shown.
- Have an assistant hold the switch to close the glass while you measure the force required to stop it.
- Read the force as soon as the glass stops moving, then immediately release the switch and the spring scale.

Closing force: 200—290 N (20—30 kgf, 44—66 lbf)

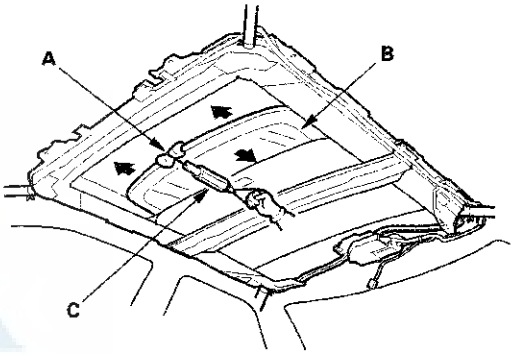

3. If the force in not within specification, remove the moonroof motor (see page 20-88), and check the following items:

- Check the gear teeth and the inner cable for breakage and damage. If the gear teeth are broken, replace the motor. If the inner cable is damaged, remove the frame (see page 20-88), and replace the cable (see page 20-91).
- Check the moonroof motor (see page 22-344). If the motor fails to run or doesn't turn smoothly, replace it.
- Check the opening drag. Go to step 4.

(cont'd)

Closing Force and Opening Drag Check (cont'd)

4. Opening drag check: Protect the leading edge of the glass with a shop towel (A). Measure the effort required to open the glass using a spring scale (B) as shown.

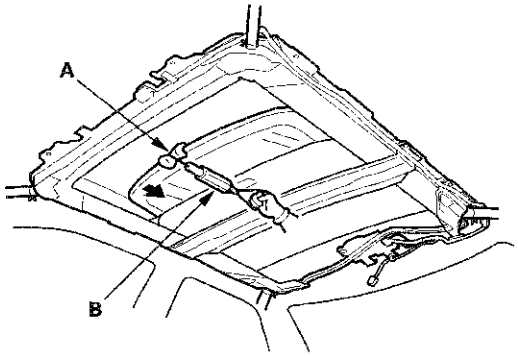

5. If the load is over 40 N (4 kgf, 9 lbf), check:
   - The side clearance and glass position adjustment (see page 20-83).
   - For broken or damaged sliding parts. If any sliding parts are damaged, replace them.

6. Reset the moonroof control unit (see page 22-342) after reinstalling the moonroof motor.

Component Location Index

2-door

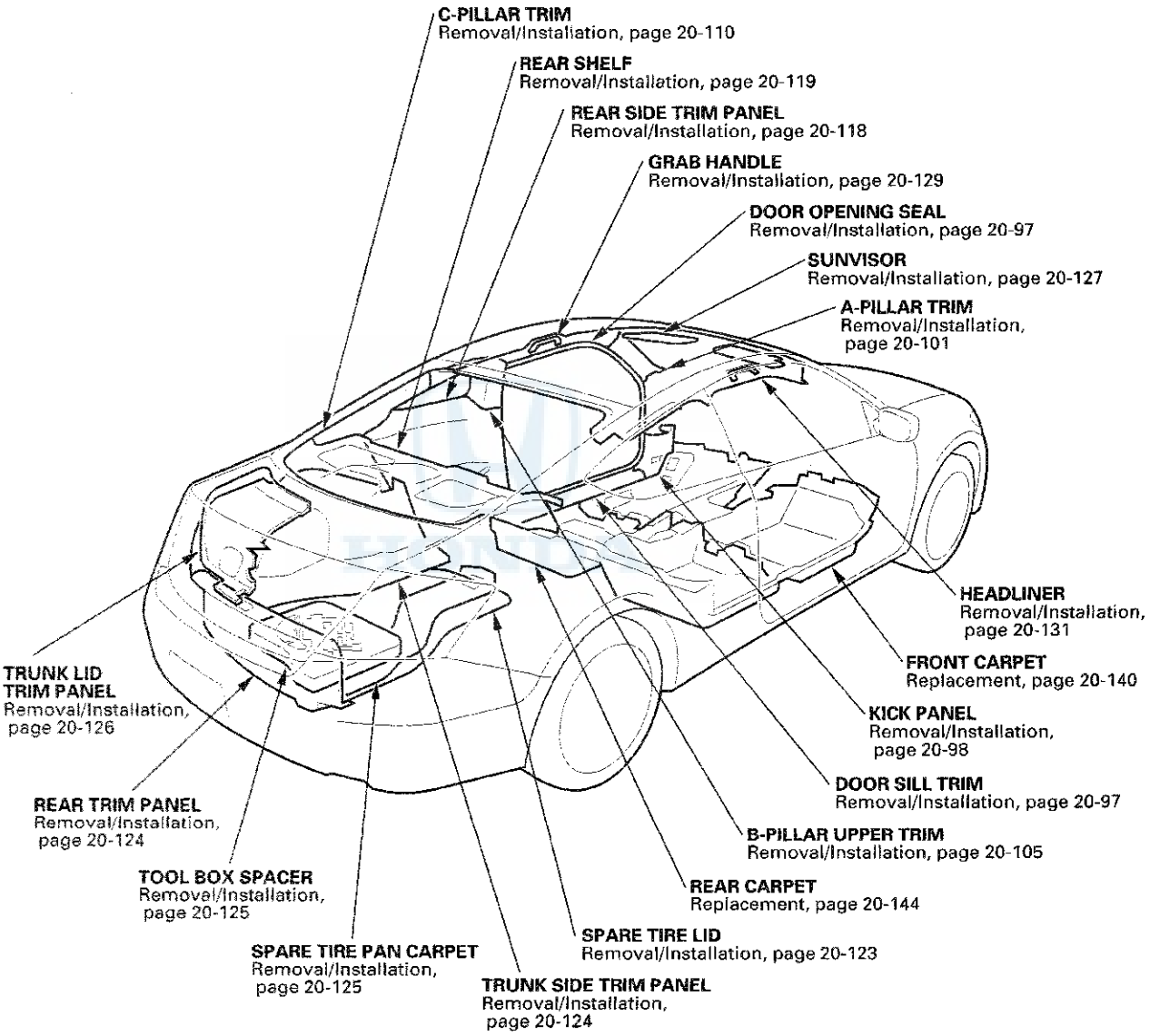

Component Location Index (cont'd)

4-door

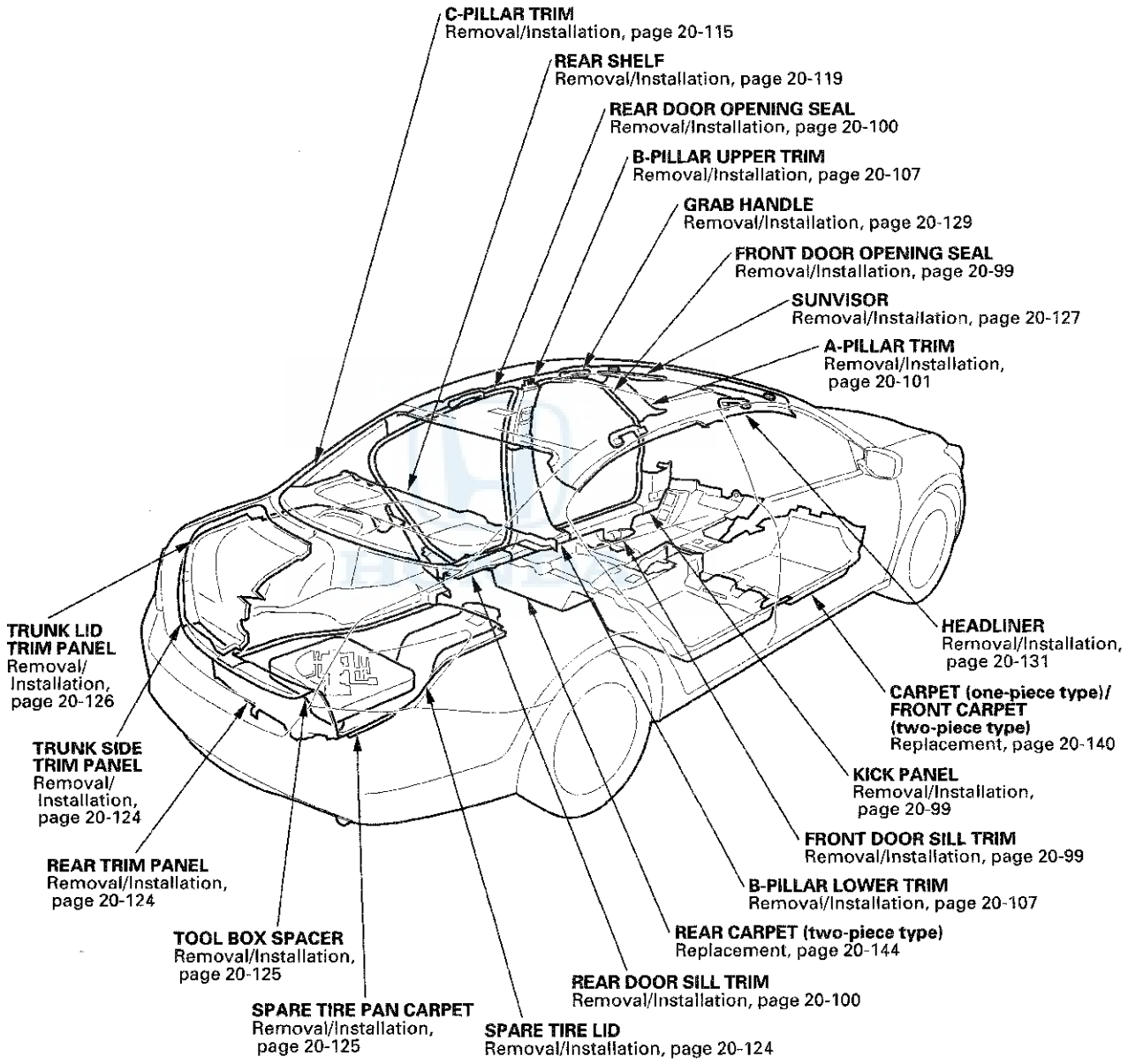

Trim Removal/Installation - Door Areas

Special Tools Required
KTC trim tool set SOJATP2014 *
* Available through the Honda Tool and Equipment Program; call 888-424-6857

Door Sill Area - 2-door

NOTE:
- Put on gloves to protect your hands.
- Take care not to bend or scratch the trim and the panels.
- Use the appropriate tool from the KTC trim tool set to avoid damage when removing components.

1. Driver's side: Remove the front side cap from the door sill trim (see step 1 on page 20-286).

2. Driver's side: Remove the trunk lid/fuel fill door opener lock cylinder, and loosen the opener mounting bolt (see step 2 on page 20-286).

3. Driver's side: Remove the screw securing the door sill trim and trunk lid opener/fuel fill door opener (see step 3 on page 20-287).

4. Detach the hooks (A) and the tabs (B) from the kick panel (C) and the rear side trim panel (D), and pull the door sill trim (E) up by hand to detach the clips, then remove it.

Driver's side

Fastener Locations

▷ : **Clip, 6 (Orange)**

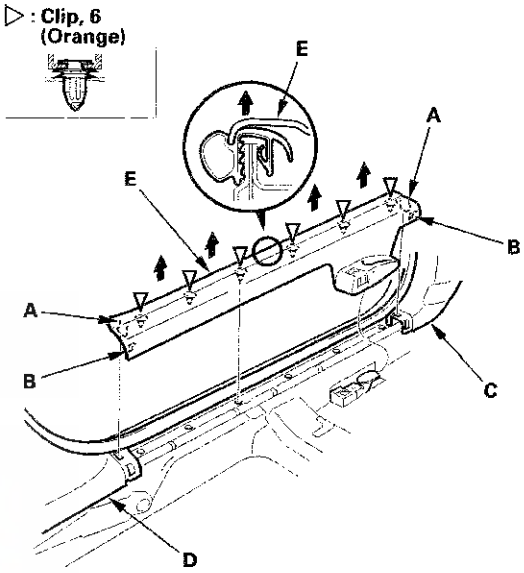

Passenger's side

Fastener Locations

▷ : **Clip, 6 (Orange)**

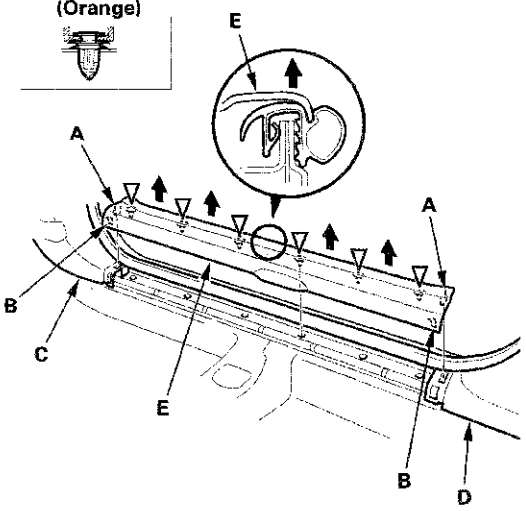

(cont'd)

Trim Removal/Installation - Door Areas (cont'd)

5. Remove the driver's kick panel (A) or the passenger's kick panel (B).

   -1 Pull out the door opening seal (C) as needed from the kick panel hooks (D) and the door opening flange.
   -2 Pull the kick panel back by hand to detach the clips, then remove it.

Driver's side

Fastener Locations

▷ : Clip, 2 (Gray)

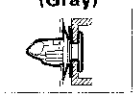

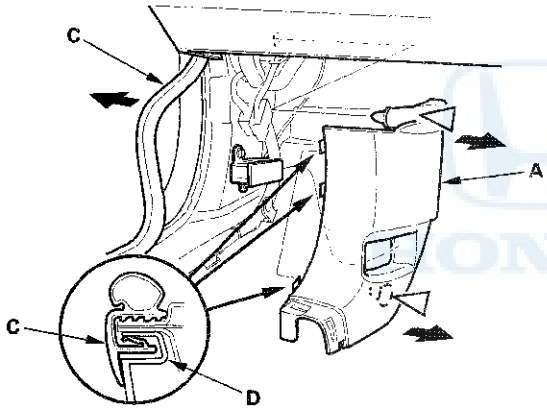

Passenger's side

Fastener Locations

▷ : Clip, 2 (Gray)

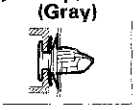

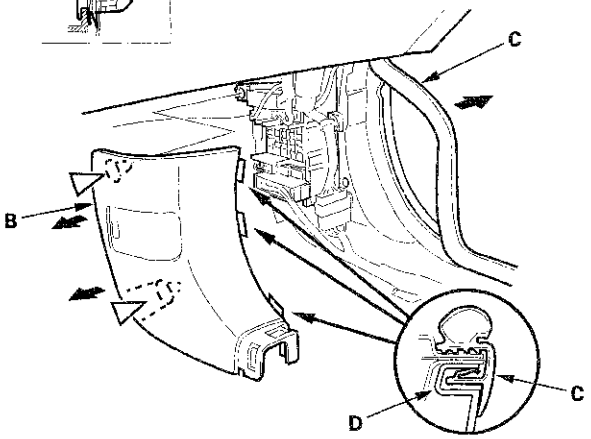

6. Pull out the door opening seal (A) from the trim hooks (B) and around the door opening flange, then remove the seal.

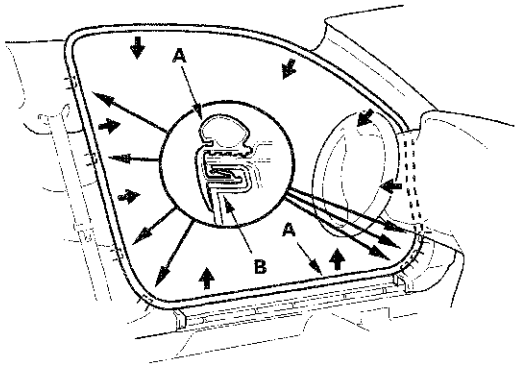

7. Install the trim in the reverse order of removal, and note these items:

   - If the clips are damaged or stress-whitened, replace them with new ones.
   - Push the clips, the hooks, and the tabs into place securely.
   - Driver's side: Before tightening the trunk lid/fuel fill door opener mounting bolt, position the door sill trim against the opener firmly by screwing the trim onto the opener.

Special Tools Required
KTC trim tool set SOJATP2014 *
* Available through the Honda Tool and Equipment Program; call 888-424-6857

Front Door Sill Area - 4-door

NOTE:
- Put on gloves to protect your hands.
- Take care not to bend or scratch the trim and the panels.
- Use the appropriate tool from the KTC trim tool set to avoid damage when removing components.

1. Driver's side: Remove the front side cap from the front door sill trim (see step 1 on page 20-286).

2. Driver's side: Remove the trunk lid/fuel fill door opener lock cylinder, and loosen the opener mounting bolt (see step 2 on page 20-286).

3. Driver's side: Remove the screw securing the front door sill trim and trunk lid opener/fuel fill door opener (see step 3 on page 20-287).

4. Detach the hooks (A) and tabs (B) from the kick panel (C) and the B-pillar lower trim (D), and pull the front door sill trim (E) up by hand to detach the clips, then remove it.

Driver's side

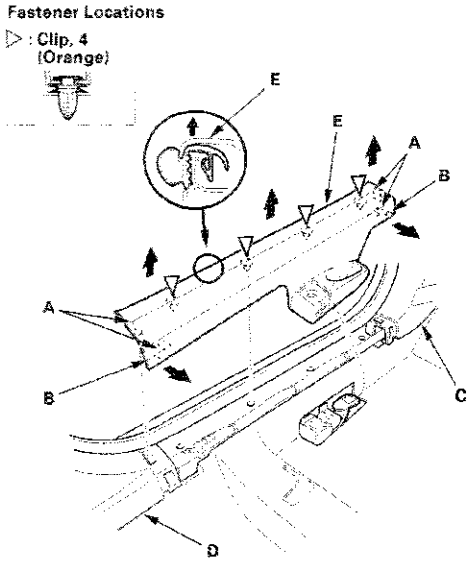

Passenger's side

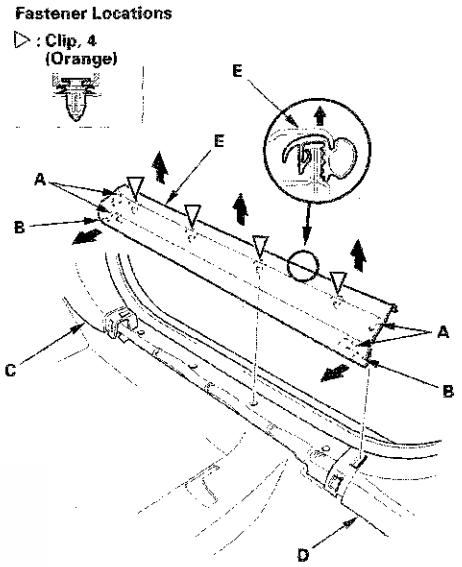

5. Remove the driver's kick panel (A) or the passenger's kick panel (B).

   1. Pull out the door opening seal (C) as needed from the kick panel hooks (D) and the door opening flange.
   2. Pull the kick panel back by hand to detach the clips, then remove it.

Driver's side

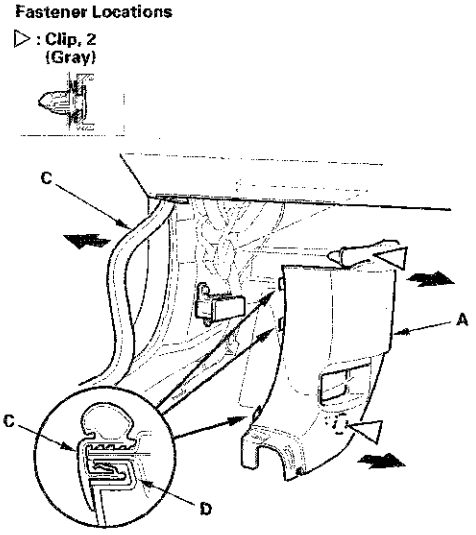

(cont'd)

Trim Removal/Installation - Door Areas (cont'd)

Passenger's side

Fastener Locations

▷ : Clip, 2 (Gray)

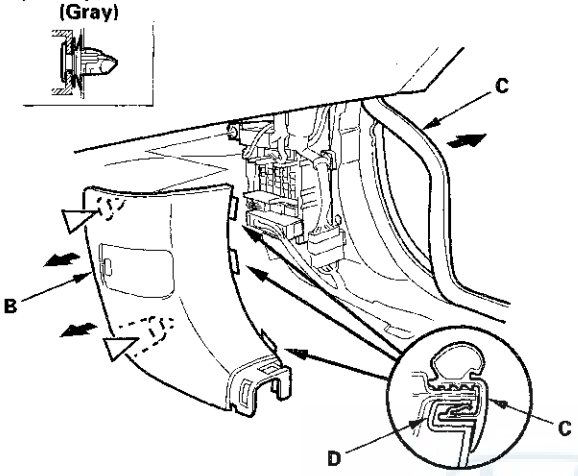

6. Pull out the front door opening seal (A) from the trim hooks (B) and around the front door opening flange, then remove the seal.

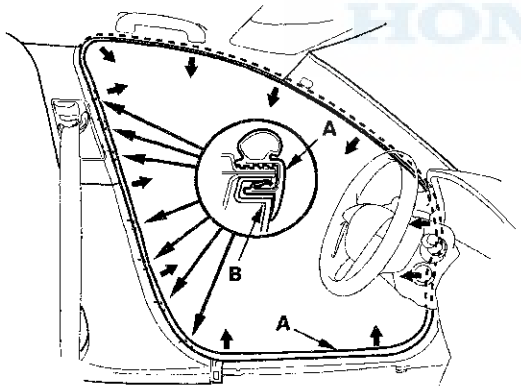

7. Install the trim in the reverse order of removal, and note these items:

   - If the clips are damaged or stress-whitened, replace them with new ones.
   - Push the clips, the hooks, and the tabs into place securely.
   - Driver's side: Before tightening the trunk lid/fuel fill door opener mounting bolt, position the front door sill trim against the opener firmly by screwing the trim onto the opener.

Special Tools Required

KTC trim tool set SOJATP2014 *

* Available through the Honda Tool and Equipment Program; call 888-424-6857

Rear Door Sill Area

NOTE:
- Put on gloves to protect your hands.
- Take care not to bend or scratch the trim and the panels.
- Use the appropriate tool from the KTC trim tool set to avoid damage when removing components.

1. Remove the rear seat cushion (see page 20-225).

2. Detach the hooks (A) and the tab (B) from the B-pillar lower trim (C), and pull the rear door sill trim (D) up by hand to detach the clips (E, F), then remove it from the rear door opening seal (G).

Fastener Locations

E ▷ : Clip, 3 (Gray) F ▷ : Clip, 1 (Green)

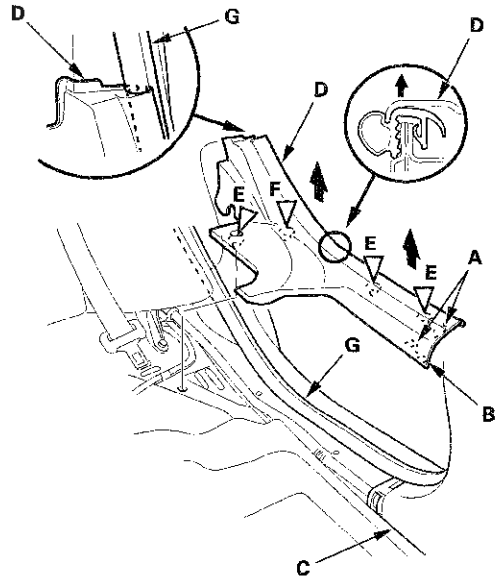

3. Pull out the rear door opening seal (A) from the trim hooks (B) and around the rear door opening flange, then remove the seal.

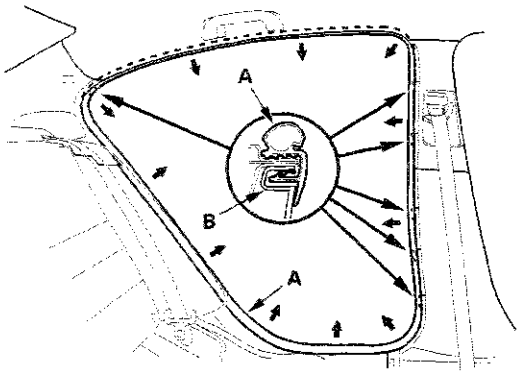

4. Install the trim in the reverse order of removal, and note these items:

   - If the clips are damaged or stress-whitened, replace them with new ones.
   - Push the clips, the hooks, and the tab into place securely.

Trim Removal/Installation - Pillar Areas

Special Tools Required
KTC trim tool set SOJATP2014 *
* Available through the Honda Tool and Equipment Program; call 888-424-6857

A-Pillar Trim

SRS components are located in this area. Review the SRS component locations, 2-door (see page 24-21), 4-door (see page 24-19) and the precautions and procedures (see page 24-23) before doing repairs or service.

NOTE:
- Follow the A-pillar trim installation procedure carefully; improper installation could cause the side curtain airbags to deploy improperly and possibly cause injury.
- Put on gloves to protect your hands.
- Use the appropriate tool from the KTC trim tool set to avoid damage when removing components.
- Take care not to scratch the trim and the panels.
- The upper clip in the A-pillar trim (A) consists of a plastic grommet (B) and a metal pin (C). The grommet expanded by the pin secures it to the body panel (D). The projections (E) on the pin break during removal, so the clip must be replaced with a new one when the trim is reinstalled.

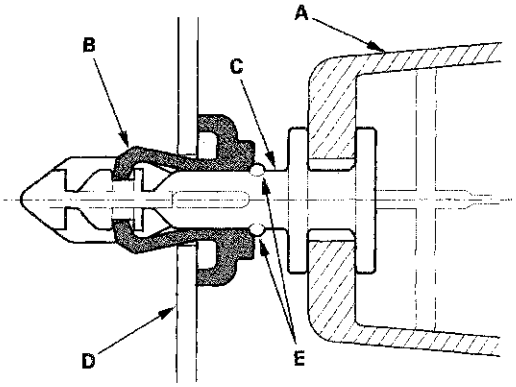

(cont'd)

Trim Removal/Installation - Pillar Areas (cont'd)

1. Pull the door opening seal away from the A-pillar as needed:

   - 2-door (see step 6 on page 20-98)
   - 4-door (see step 6 on page 20-100)

2. Hit the upper clip in the A-pillar trim (A) with a rubber mallet. The clip is located under the point where the triangle mark (B) on the edge of the trim indicates. Hitting the clip breaks the projections (C) on the pin (D) and pushes it into the grommet (E) on the body (F).

   NOTE: The upper clip must be replaced with a new one when the A-pillar trim is reinstalled.

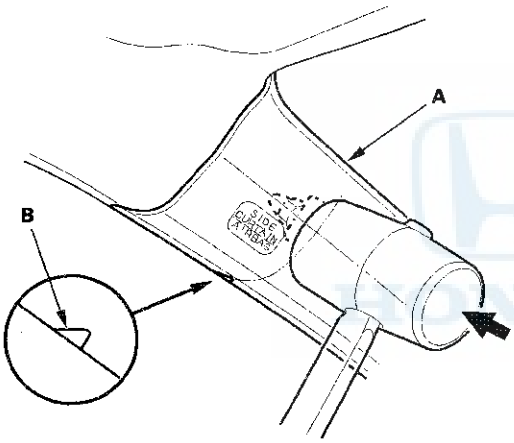

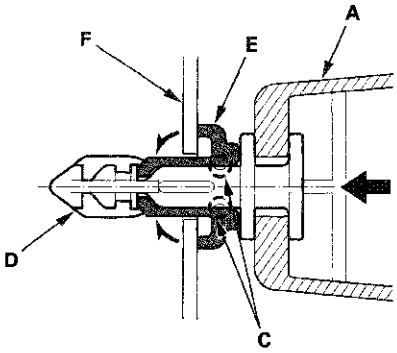

3. Pull the top of the A-pillar trim (A) back by hand to remove the upper clip (B) from the body (C).

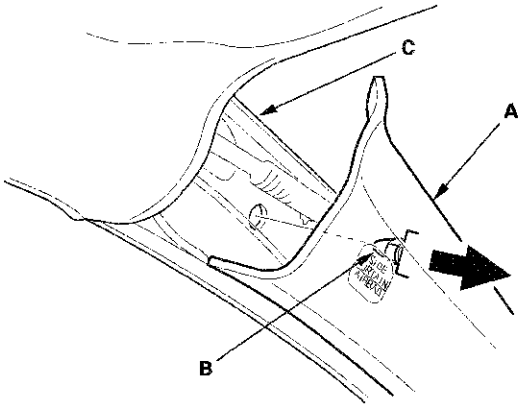

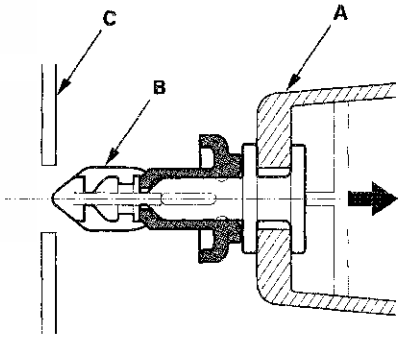

4. Pull the A-pillar trim (A) by hand to detach the clips. Pull the trim up from the dashboard (B), then remove it.

Fastener Locations

▷ : **Clip, 2 (Green)**

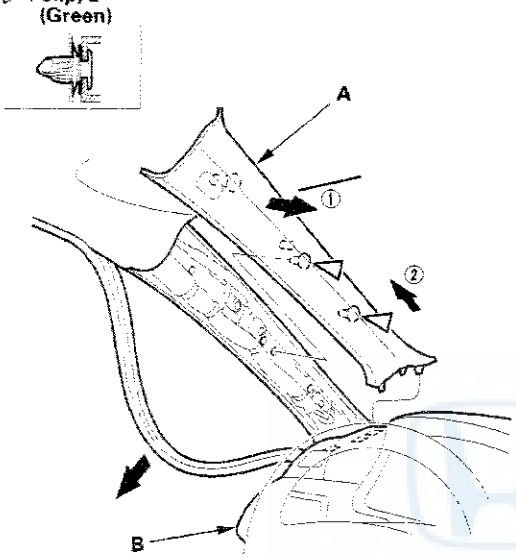

5. If the side curtain airbag has been deployed, replace the A-pillar trim with a new one (see page 24-202).

6. If the side curtain airbag has not been deployed, check the A-pillar trim (A) and note the following:

   - To prevent the side curtain airbags from deploying improperly and possibly causing injury, inspect the A-pillar trim and replace it if it has any of the following damage:
     - Any cracks, deformations, or stress-whitened areas in the A-pillar trim
     - Any cracks or stress-whitening in the clip seating surfaces (B)
   - Replace the upper clip (C) with a new one.
   - If the clips (D) are damaged or stress-whitened, replace them with new ones.

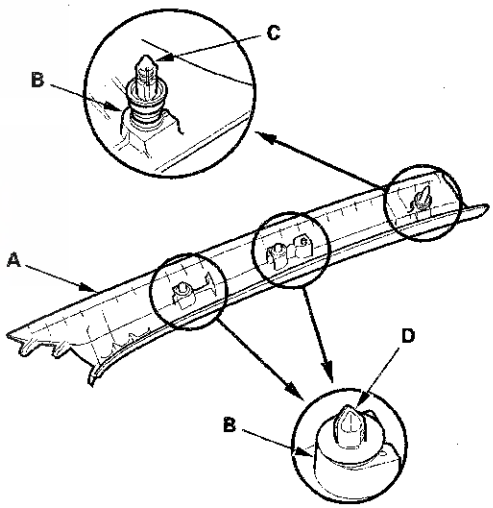

(cont'd)

Trim Removal/Installation - Pillar Areas (cont'd)

7. If the new A-pillar trim (A) will be installed, before installing the trim, temporarily remove the new upper clip (B).

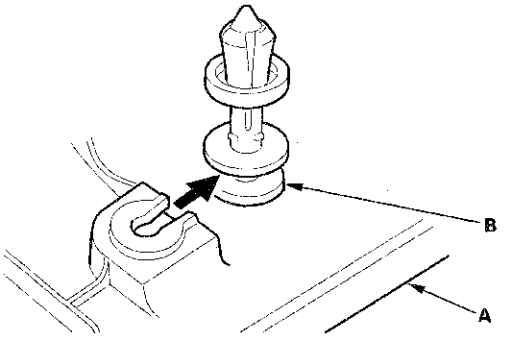

8. Check the overlap between the headliner and the A-pillar trim, and if necessary, adjust it (see page 24-204).

9. Carefully install the new upper clip (A) to the A-pillar trim (B). Be sure that the grommet (C) is nearest to the top of the pin (D) as shown.

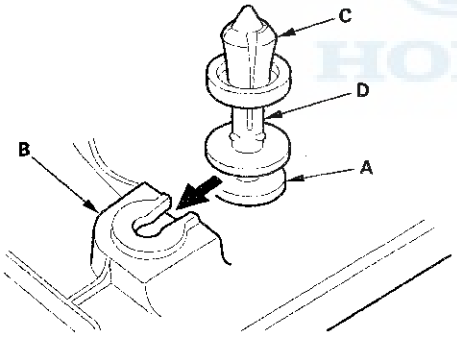

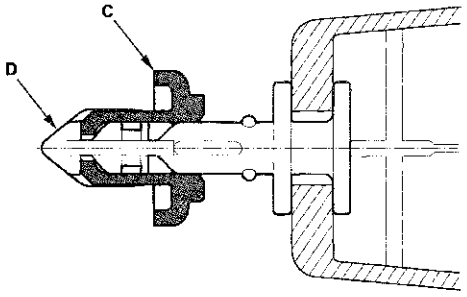

10. Reinstall the A-pillar trim (A).

-1 Insert the bottom of the trim into the dashboard (B).
-2 Place the trim over the A-pillar (C), and fit its upper clip (D), the lower clips, and the pin (E) into the holes (F) in the A-pillar, then lightly push the trim into place.

NOTE:
- Make sure the side curtain airbag is not tucked under the clips or trim ribs.
- Do not push too hard on the A-pillar trim. If you push too hard, the clip will be damaged, and it will not hold the trim properly.
- Gently tug on the A-pillar trim to verify that all clips are securely fastened.

Fastener Locations

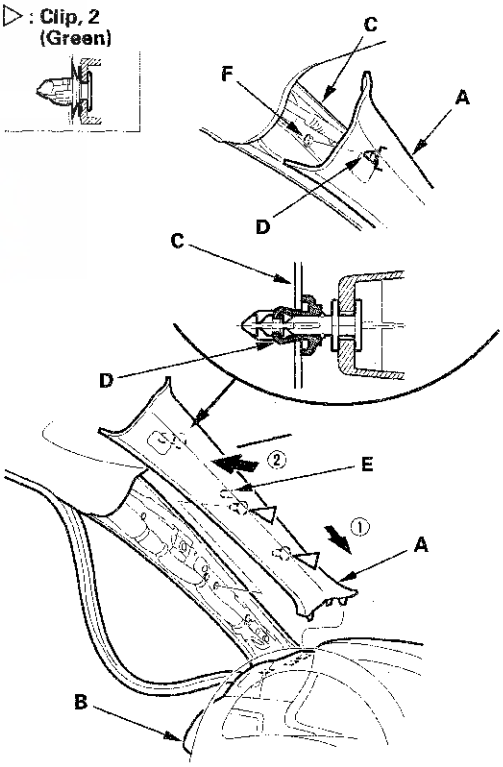

11. Reinstall the door opening seal.

Special Tools Required
KTC trim tool set SOJATP2014 *
* Available through the Honda Tool and Equipment Program; call 888-424-6857

B-Pillar Upper Trim - 2-door

SRS components are located in this area. Review the SRS component locations (see page 24-21) and the precautions and procedures (see page 24-23) before doing repairs or service.

NOTE:
- Put on gloves to protect your hands.
- Take care not to bend or scratch the trim and the panels.
- Use the appropriate tool from the KTC trim tool set to avoid damage when removing components.

1. Remove these items:
   - Door sill trim (see page 20-97)
   - Door opening seal, as needed (see step 6 on page 20-98)
   - Front seat belt lower anchor bolt, driver's side (see step 2 on page 24-5)
   - Front seat belt lower anchor plate, passenger's side (see step 2 on page 24-5)
   - Rear side trim panel, as needed (see page 20-118)
2. Lower the coat hanger, then remove the screw (see step 1 on page 20-110).
3. Pull down the roof portion of the C-pillar trim from the B-pillar upper trim by detaching the hooks and the clip (see step 5 on page 20-111).
4. Remove the B-pillar upper trim (A).
   1. Detach the lower hooks (B) and the lower clip (C).
   2. Pull the bottom of the trim back to release the upper pin (D) from the hole in the body.
   3. Detach the upper clip (E).
   4. Pull the trim down to release the upper hook (F) from the hole in the body.

Fastener Locations

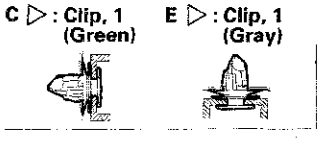

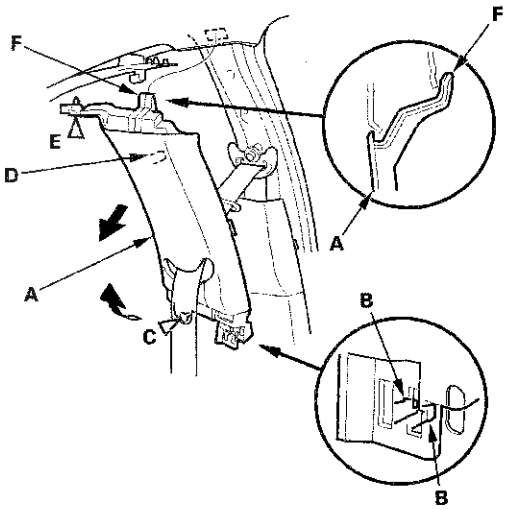

(cont'd)

Trim Removal/Installation - Pillar Areas (cont'd)

5. Left B-pillar upper trim: Release the hooks (A), then remove the cap (B) from the B-pillar upper trim (C).

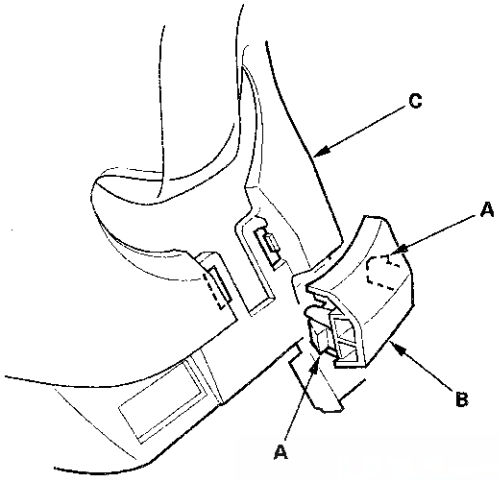

6. Pass the front seat belt (A) lower anchor out through a hole in the B-pillar upper trim (B), then remove the trim.

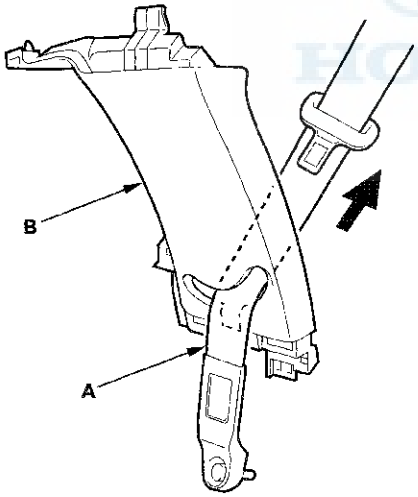

7. Install the trim in the reverse order of removal, and note these items:

- If the clips (A) are damaged or stress-whitened, replace them with new ones.
- If the side curtain airbag has deployed, replace the B-pillar upper trim and all clips on the trim with new ones (see page 24-202).
- To prevent the side curtain airbags from deploying improperly and possibly causing injury, inspect the trim and replace it if it has any of the following damage:
  - Any cracks or deformations in the B-pillar upper trim (B) and the upper hook (C), or any stress-whitened areas in the upper part of the trim
  - Any cracks or stress-whitened areas in the clips seating surfaces (D)
- Replace any damaged parts with new ones.
- Make sure the top of the trim overlaps with the headliner correctly (see page 24-204).
- Make sure the pin on the B-pillar upper trim is engaged to the hole in the body when installing the trim.
- Make sure the upper hook is installed into the hole in the body securely.
- Push the clip and the lower hooks into place securely.
- Before installing the lower anchor, make sure there are no twists or kinks in the seat belt.

Trim Inspection

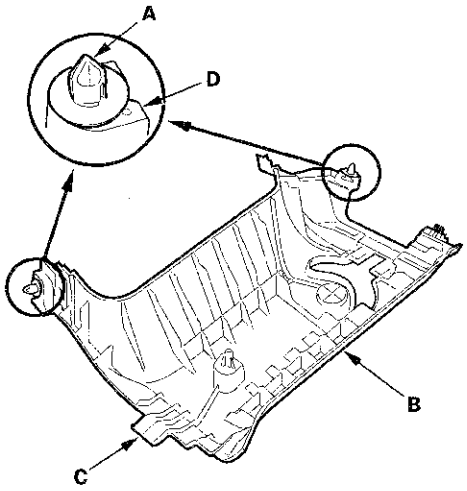

Special Tools Required
KTC trim tool set SOJATP2014 *
* Available through the Honda Tool and Equipment Program; call 888-424-6857

B-Pillar Upper/Lower Trim - 4-door

SRS components are located in this area. Review the SRS component locations (see page 24-19) and the precautions and procedures (see page 24-23) before doing repairs or service.

NOTE:
- Put on gloves to protect your hands.
- Take care not to bend or scratch the trim and the panels.
- Use the appropriate tool from the KTC trim tool set to avoid damage when removing components.

1. Remove these items:
   - Front door sill trim (see page 20-99)
   - Rear door sill trim (see page 20-100)
   - Front door opening seal, as needed (see step 6 on page 20-100)
   - Rear door opening seal, as needed (see step 3 on page 20-101)
2. Slide the front seat forward fully.
3. Remove the B-pillar lower trim (A).
   1. Pull the upper portion of the trim back to detach the upper hooks (B).
   2. Detach the lower clip by pulling the bottom of the trim back by hand.

Fastener Location

▷ : **Clip, 1 (Gray)**

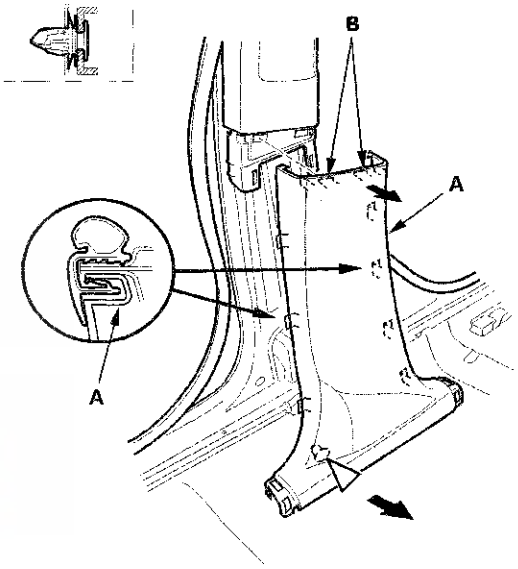

4. Remove the front seat belt lower anchor (see page 24-8).

(cont'd)

Trim Removal/Installation - Pillar Areas (cont'd)

5. Remove the B-pillar upper trim (A).

   -1 Pull the bottom of the trim back by hand to detach the lower hooks (B).
   -2 Pull the bottom of the trim back to release the upper pin (C) from the hole in the body and the slider (D) from pin (E) on the front seat belt shoulder anchor adjuster.
   -3 Pull the trim down to release the upper hooks (F) from the holes in the body.

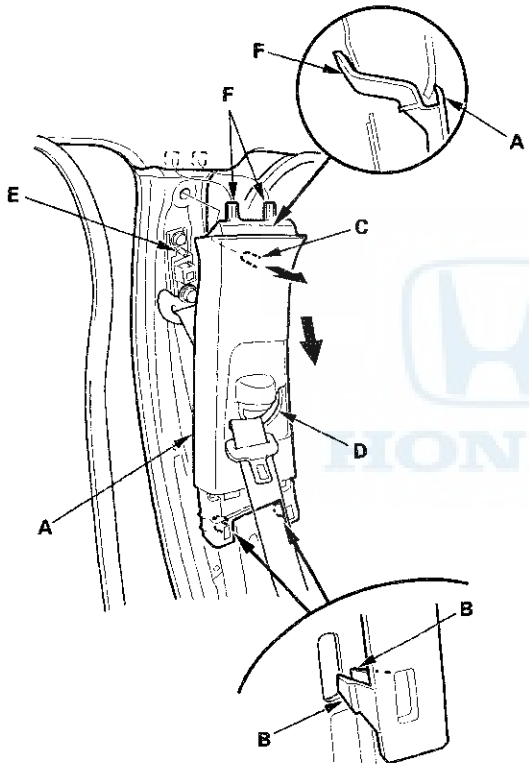

6. Pass the front seat belt (A) lower anchor out through a hole in the slider (B), then remove the B-pillar upper trim (C).

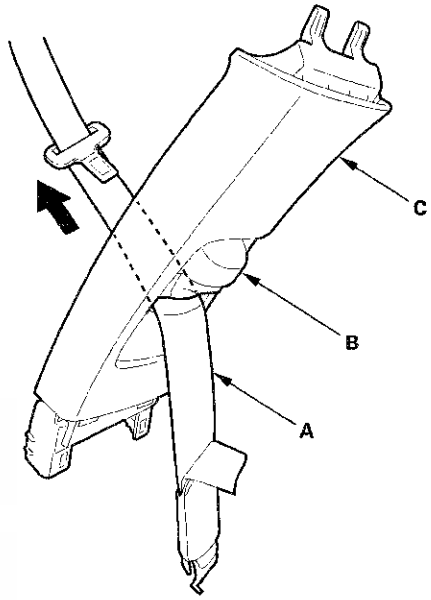

7. Install the trim in the reverse order of removal, and note these items:

   - If the clip (A) is damaged or stress-whitened, replace it with a new one.
   - If the side curtain airbag has deployed, replace the B-pillar upper trim, the B-pillar lower trim, and the clip on the trim with new ones (see page 24-202).
   - To prevent the side curtain airbags from deploying improperly and possibly causing injury, inspect the trim and replace it if it has any of the following damage:
     - Any cracks or deformations in the B-pillar upper trim (B) and the upper hooks (C), or any stress-whitened areas in the upper part of the trim
     - Any cracks or deformations in the B-pillar lower trim (D), or any breakages in the part (E) fitted with the B-pillar upper trim
     - Any cracks or stress-whitened areas in the clip seating surface (F)
   - Replace any damaged parts with new ones.
   - Make sure the top of the trim overlaps with the headliner correctly (see page 24-204).
   - Make sure the pin (G) on the front seat belt shoulder anchor adjuster (H) and the hole (I) on the back of the slider are engaged when installing the B-pillar upper trim.
   - Make sure the upper hooks are installed into the holes in the body securely.
   - Push the clip and the hooks into place securely.
   - Before installing the anchor bolt, make sure there are no twists or kinks in the seat belt.

Trim inspection

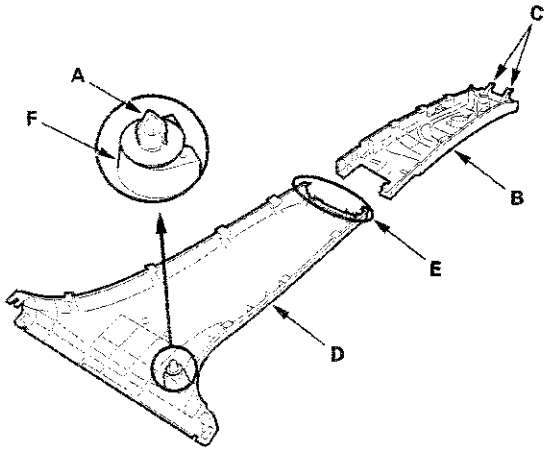

Slider engagement with shoulder anchor adjuster

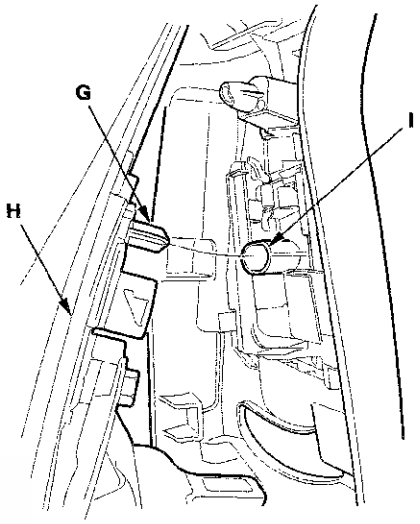

Trim Removal/Installation - Pillar Areas (cont'd)

Special Tools Required
KTC trim tool set SOJATP2014 *
* Available through the Honda Tool and Equipment Program; call 888-424-6857

C-Pillar Trim - 2-door

SRS components are located in this area. Review the SRS component locations (see page 24-21) and the precautions and procedures (see page 24-23) before doing repairs or service.

NOTE:
- Follow the C-pillar trim installation procedure carefully; improper installation could cause the side curtain airbag to deploy improperly and possibly cause injury.
- Put on gloves to protect your hands.
- Use the appropriate tool from the KTC trim tool set to avoid damage when removing components.
- Take care not to scratch the trim and the panels.
- The rear clip in the C-pillar trim (A) consists of a plastic grommet (B) and a metal pin (C). The grommet expanded by the pin secures it to the body panel (D). The projections (E) on the pin break during removal, so the clip must be replaced with a new one when the trim is reinstalled.

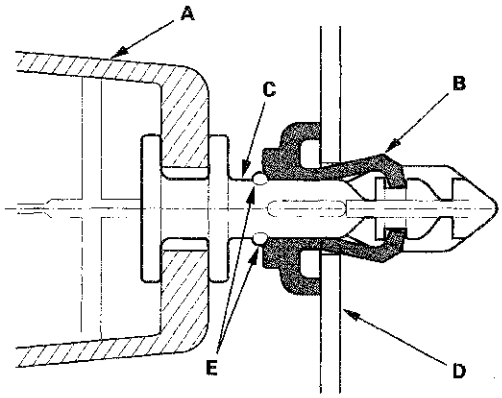

1. Lower the coat hanger (A), then remove the screw.

Fastener Location
▶ : Screw, 1

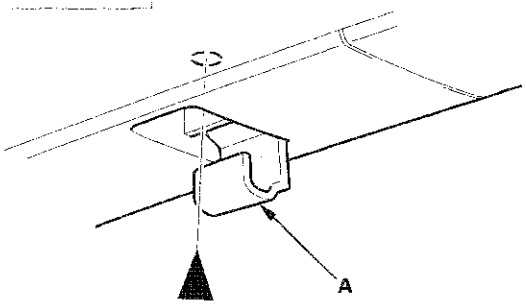

2. Pry out the C-pillar lid cap (A) with the appropriate trim tool, then remove it.

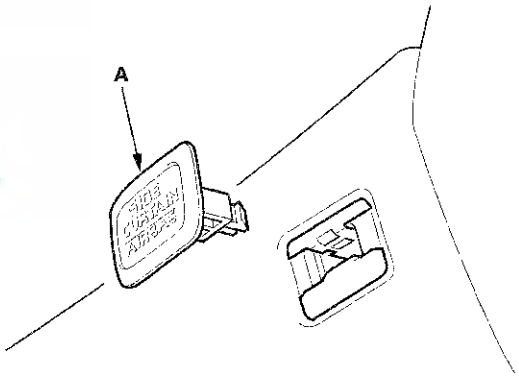

3. Using a pair of pliers, remove the C-pillar lid clip (A) by pinching its hooks.

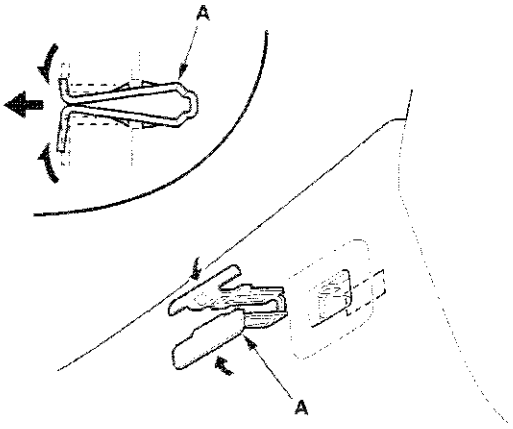

4. Hit the surface of the C-pillar trim (A) just upon the rear clip with a rubber mallet. Hitting the clip breaks the projections (B) on the pin (C) and pushes it into the grommet (D) on the body (E).

   NOTE: The rear clip must be replaced with a new one when the C-pillar trim is reinstalled.

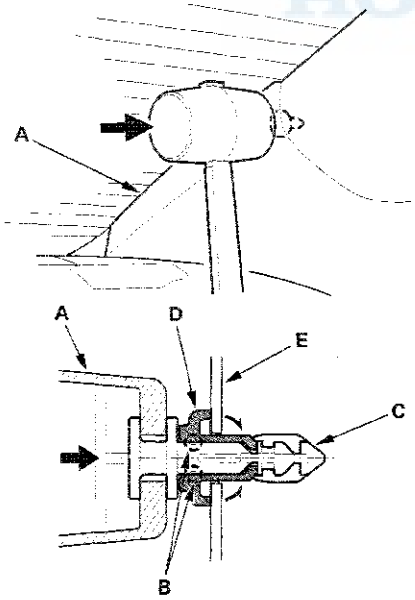

5. Pull down the front edge of the C-pillar trim (A) from the B-pillar upper trim (B) by detaching the hooks (C), and pull down the roof portion of the C-pillar trim by detaching the clips and releasing the projection (D).

Fastener Locations

▷ : **Clip, 2 (Gray)**

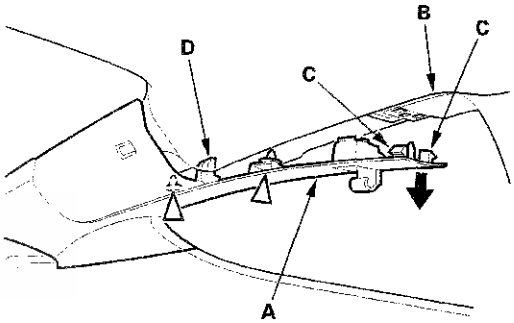

(cont'd)

Trim Removal/Installation - Pillar Areas (cont'd)

6. Remove the C-pillar trim (A).

   -1 Pull the top of the trim back by hand to remove the rear clip (B) from the body (C).
   -2 Pull the bottom of the trim out by hand to detach the hooks (D) from the rear side trim panel (E) and the rear shelf (F).
   -3 Release the rear hook (G) from the rear shelf by pulling the trim forward.

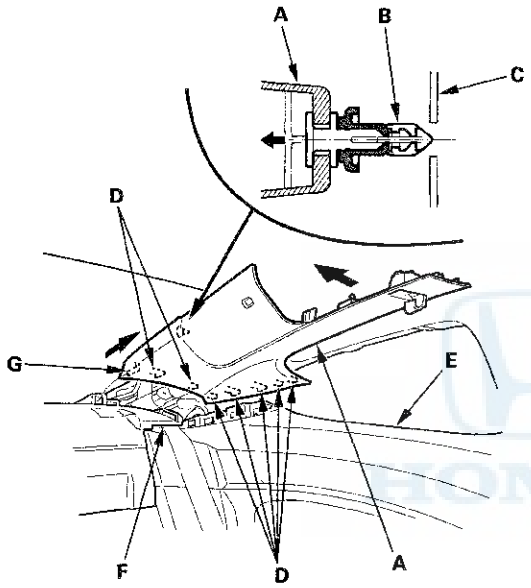

7. If the side curtain airbag has been deployed, replace the C-pillar trim, the C-pillar lid cap, and the trim clips with new ones (see page 24-202).

8. If the side curtain airbag has not been deployed, check the C-pillar trim (A) and note the following:

   - To prevent the side curtain airbags from deploying improperly and possibly causing injury, inspect the C-pillar trim and replace it if it has any of the following damage:
     - Any cracks, deformations, or stress-whitened areas in the C-pillar trim, the C-pillar lid (B), or the C-pillar brackets (C).
     - Any C-pillar brackets which have come off the C-pillar trim or the C-pillar lid.
     - Any cracks or stress-whitened areas in the clip seating surfaces (D).
     - Any cracks or stress-whitened areas in the C-pillar lid cap (E).
   - Replace the rear clip (F) with a new one.
   - If the clips (G) are damaged or stress-whitened, replace them with new ones.

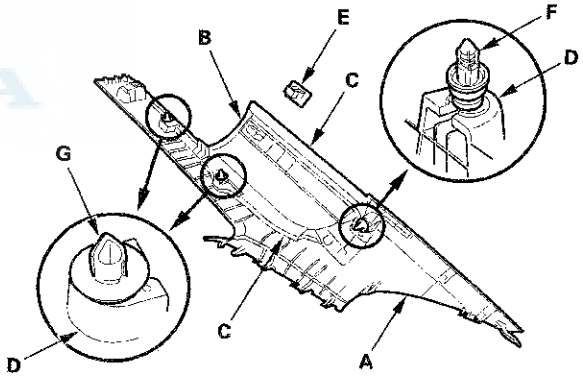

9. If new C-pillar trim (A) will be installed, before installing the trim, temporarily remove the new rear clip (B).

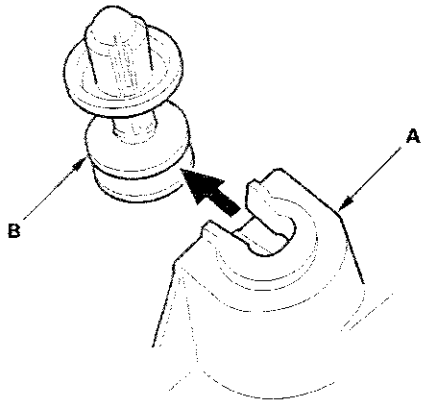

10. Check the overlap between the headliner and the C-pillar trim, and if necessary, adjust it (see page 24-204).

11. Carefully reinstall the new rear clip (A) to the C-pillar trim (B). Be sure that the grommet (C) is nearest to the top of the pin (D) as shown.

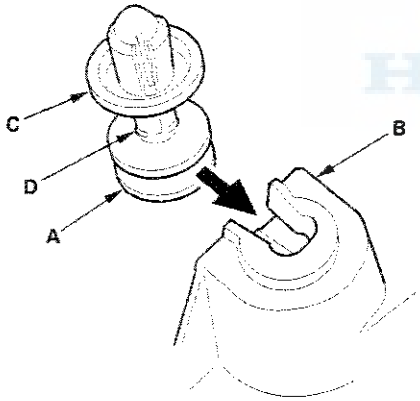

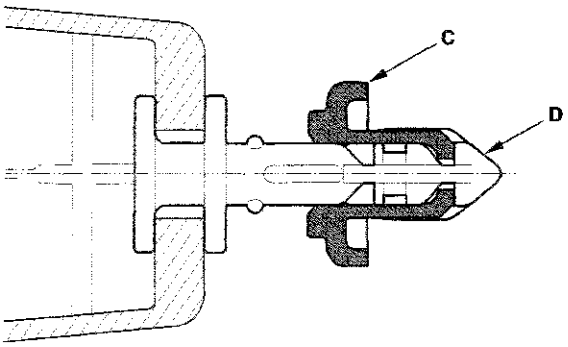

12. Reinstall the C-pillar lid clip (A) to the C-pillar lid (B).

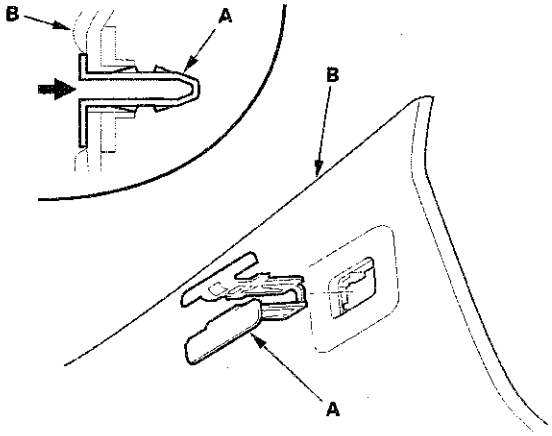

(cont'd)

Trim Removal/Installation - Pillar Areas (cont'd)

14. Reinstall the C-pillar trim (A).

    -1 Insert the rear hook (B) and the bottom hooks (C) of the trim into the rear shelf (D) and the rear side trim panel (E).
    -2 Place the trim over the C-pillar (F), and fit its rear clip (G) into the hole in the body. Align the C-pillar lid clip (H) with the holes in the headliner (I) and the side curtain airbag bracket (J), then lightly push the trim into place.
    -3 Install the C-pillar lid cap (K) fully into the clip.

    NOTE:
    - Make sure the side curtain airbag is not tucked under the clips or trim ribs.
    - Do not push too hard on the C-pillar trim. If you push too hard, the clip will be damaged, and it will not hold the trim properly.
    - Gently tug on the C-pillar trim to verify that all clips are securely fastened.

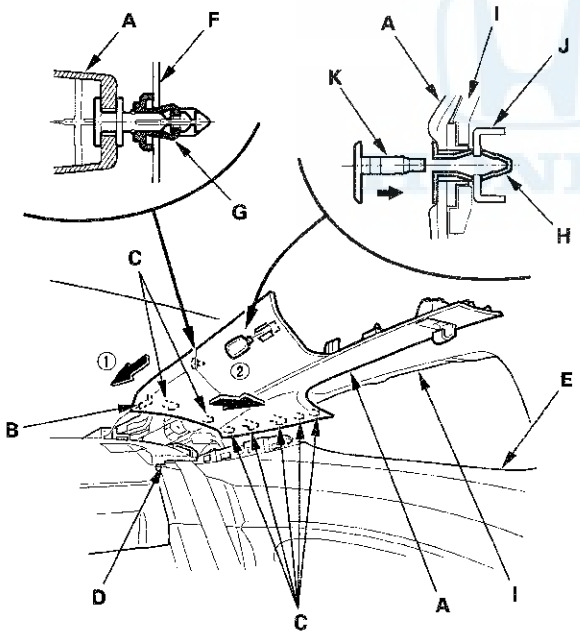

15. Fit the projection (A) and the clips into the holes in the body, then push the roof portion of the C-pillar trim (B) until its clips snap into place securely, and push the front edge of the trim until its hooks (C) snap into the B-pillar upper trim (D) securely.

Fastener Locations

▷ : **Clip, 2 (Gray)**

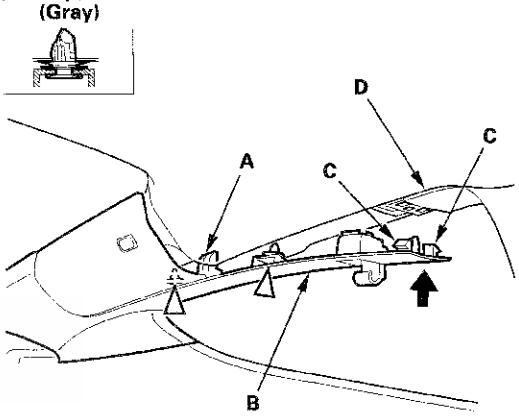

16. Reinstall the screw under the coat hanger (A).

Fastener Location

▶ : **Screw, 1**

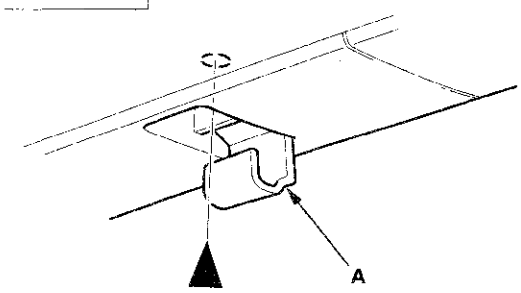

Special Tools Required
KTC trim tool set SOJATP2014 *
* Available through the Honda Tool and Equipment Program; call 888-424-6857

C-Pillar Trim - 4-door

SRS components are located in this area. Review the SRS component locations (see page 24-19) and the precautions and procedures (see page 24-23) before doing repairs or service.

NOTE:
- Follow the C-pillar trim installation procedure carefully; improper installation could cause the side curtain airbag to deploy improperly and possibly cause injury.
- Put on gloves to protect your hands.
- Use the appropriate tool from the KTC trim tool set to avoid damage when removing components.
- Take care not to scratch the trim and the panels.
- The upper clip in the C-pillar trim (A) consists of a plastic grommet (B) and a metal pin (C). The grommet expanded by the pin secures it to the body panel (D). The upper clip must be replaced with a new one when the trim is reinstalled.

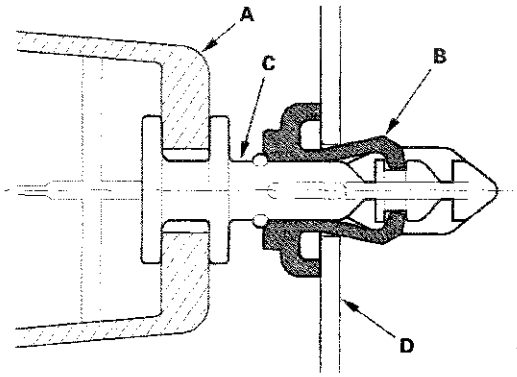

1. Remove these items:
   - Rear seat cushion (see page 20-225)
   - Rear seat side bolster (see page 20-225)
   - Rear door opening seal, as needed (see step 3 on page 20-101)
2. Fold the seat-back down.
3. Hit the upper clip in the C-pillar trim (A) with a rubber mallet. The clip is located under the point where the triangle mark (B) on the edge of the trim indicates. Hitting the clip breaks the projections (C) on the pin (D) and pushes it into the grommet (E) on the body (F).

   NOTE: The upper clip must be replaced with a new one when the C-pillar trim is reinstalled.

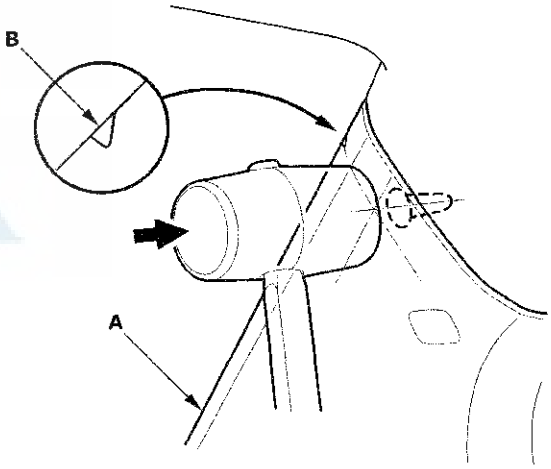

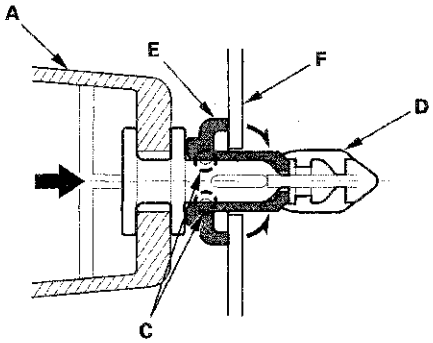

(cont'd)

Trim Removal/Installation - Pillar Areas (cont'd)

4. Pull the top of the C-pillar trim (A) back by hand to remove the upper clip (B) from the body (C).

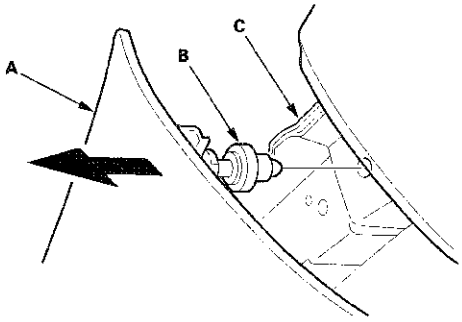

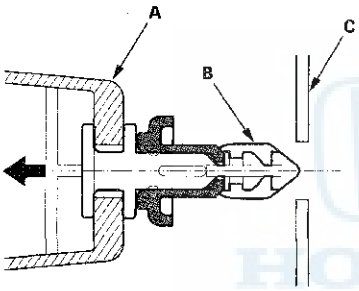

5. Pull the C-pillar trim (A) by hand to detach the clips and to release the hooks (B), then pull the trim out from the rear shelf (C).

Fastener Locations

▷ : Clip, 3 (Gray)

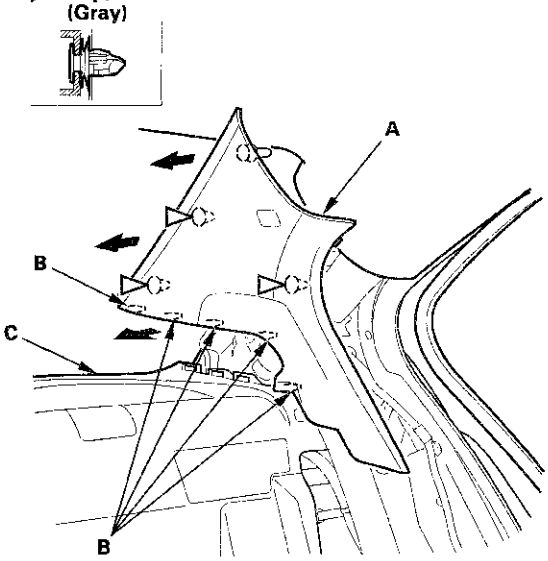

6. If the side curtain airbag has been deployed, replace the C-pillar trim and all of its clips with new parts (see page 24-202).

7. If the side curtain airbag has not been deployed, check the C-pillar trim (A) and note the following:

   - To prevent the side curtain airbags from deploying improperly and possibly causing injury, inspect the C-pillar trim and replace it if it has any of the following damage:
     - Any cracks, deformations, or stress-whitened areas in the C-pillar trim
     - Any cracks or stress-whitened areas in the clip seating surfaces (B)
   - Replace the upper clip (C) with a new one.
   - If the clips (D) are damaged or stress-whitened, replace them with new ones.

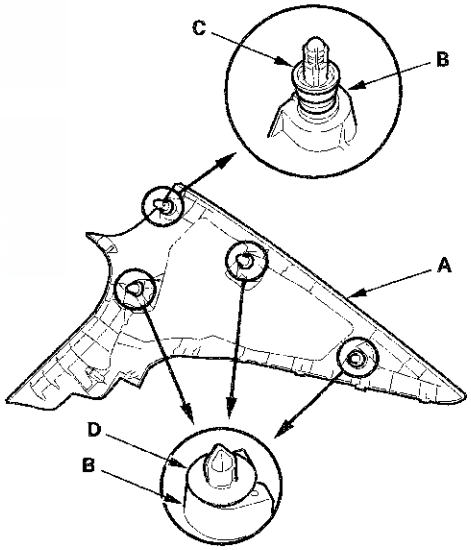

8. If new C-pillar trim (A) will be installed, before installing the trim, temporarily remove the new upper clip (B).

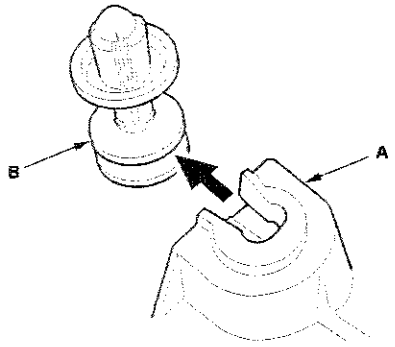

9. Check the overlap between the headliner and C-pillar trim, and if necessary, adjust it (see page 24-204).

10. Carefully reinstall the new upper clip (A) to the C-pillar trim (B). Be sure that the grommet (C) is nearest to the top of the pin (D) as shown.

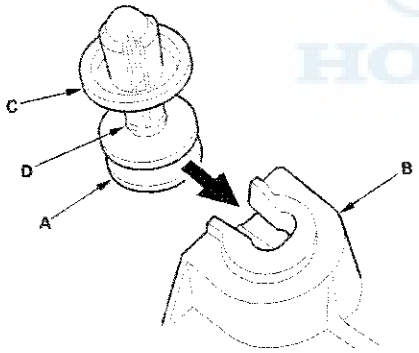

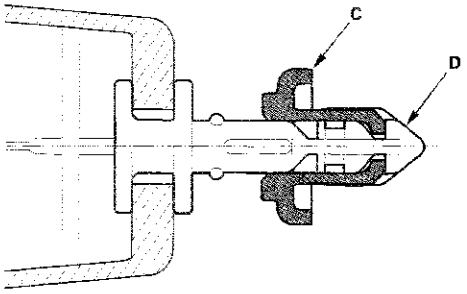

11. Reinstall the C-pillar trim (A).

-1 Set the bottom hooks (B) of the trim to the rear shelf (C).
-2 Place the trim over the C-pillar (D), and fit its upper clip (E) and the lower clips into the holes (F) in the C-pillar, then lightly push the trim into place.

NOTE:
- Make sure the side curtain airbag is not tucked under the clips or the trim ribs.
- Do not push too hard on the C-pillar trim. If you push too hard, the clip will be damaged, and it will not hold the trim properly.
- Gently tug on the C-pillar trim to verify that all clips are securely fastened.

Fastener Locations

▷ : **Clip, 3 (Gray)**

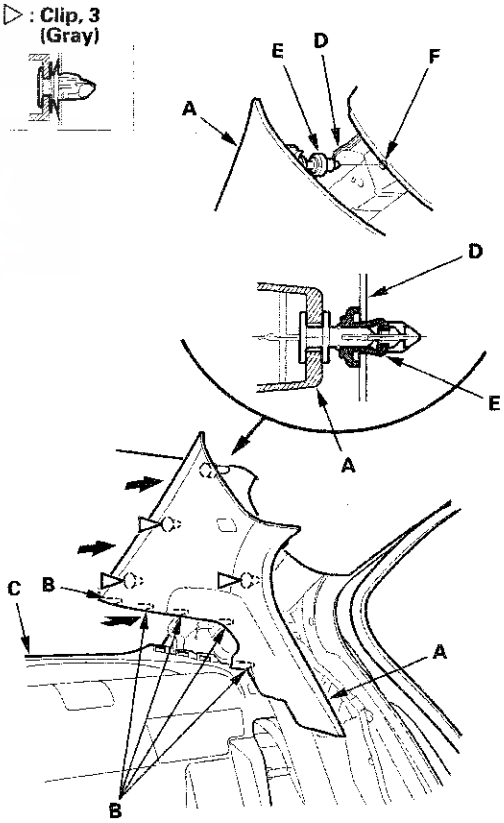

13. Reinstall the rear door opening seal.

Trim Removal/Installation - Rear Side Area

Special Tools Required
KTC trim tool set SOJATP2014 *
* Available through the Honda Tool and Equipment Program; call 888-424-6857

2-door

SRS components are located in this area. Review the SRS component locations (see page 24-21) and the precautions and procedures (see page 24-23) before doing repairs or service.

NOTE:
- Put on gloves to protect your hands.
- Take care not to bend or scratch the trim and the panels.
- Use the appropriate tool from the KTC trim tool set to avoid damage when removing components.

1. Remove these items:
   - Door sill trim (see page 20-97)
   - C-pillar trim (see page 20-110)
   - Rear seat-back (see page 20-223)
   - Rear seat cushion (see page 20-225)

2. Lower the rear seat pivot bracket (A).

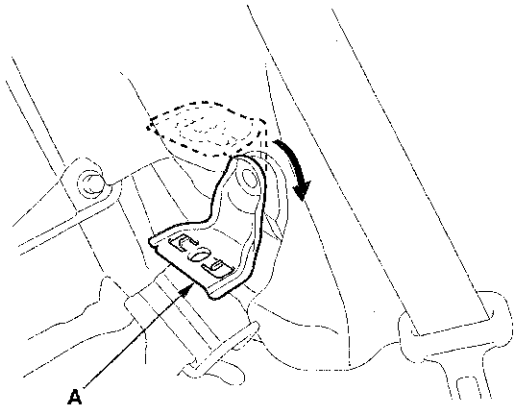

3. Remove the rear side trim panel (A).
   - 1 Remove the clip (B).
   - 2 Gently pull the rear shelf (C) back to release the projections (D) and detach the hook (E) from the panel.
   - 3 Detach the clips (F) by pulling the panel back.
   - 4 Release the hooks (G) and the tabs (H) from the B-pillar upper trim (I).

Fastener Locations
B ▷ : Clip, 1 F ▷ : Clip, 6 (Gray)

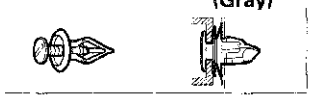

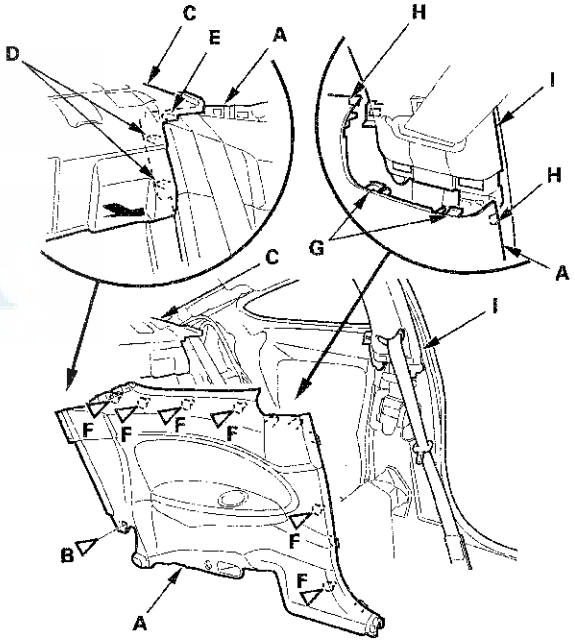

4. Install the panel in the reverse order of removal, and note these items:
   - If the clips are damaged or stress-whitened, replace them with new ones.
   - Push the clips and the hooks into place securely.

Trim Removal/Installation - Rear Shelf Area

Special Tools Required
KTC trim tool set SOJATP2014 *
* Available through the Honda Tool and Equipment Program; call 888-424-6857

Rear Shelf

SRS components are located in this area. Review the SRS component locations, 2-door (see page 24-21), 4-door (see page 24-19) and the precautions and procedures (see page 24-23) before doing repairs or service.

NOTE:
- Put on gloves to protect your hands.
- Take care not to bend or scratch the rear shelf and the trim.
- Use the appropriate tool from the KTC trim tool set to avoid damage when removing components.

1. Remove these items:
   - Rear seat cushion, 4-door (see page 20-225)
   - Rear seat side bolster, both sides, 4-door (see page 20-225)
   - Rear door opening seal, as needed, 4-door (see step 3 on page 20-101)
   - C-pillar trim, both sides:
     – 2-door (see page 20- 110)
     – 4-door (see page 20- 115)

2. From the trunk compartment, turn the high mount brake light socket (A) 45 ° counterclockwise to remove the socket. 4-door is shown; 2-door is similar.

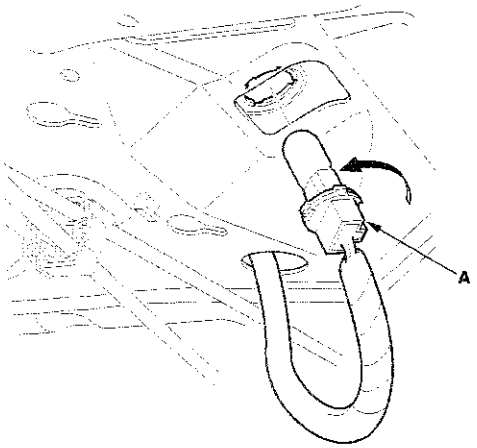

3. For some models: Disconnect the Active Noise Cancellation (ANC) rear microphone subharness connector (A).

2-door

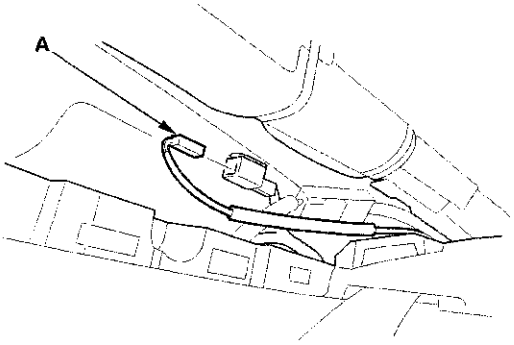

4-door

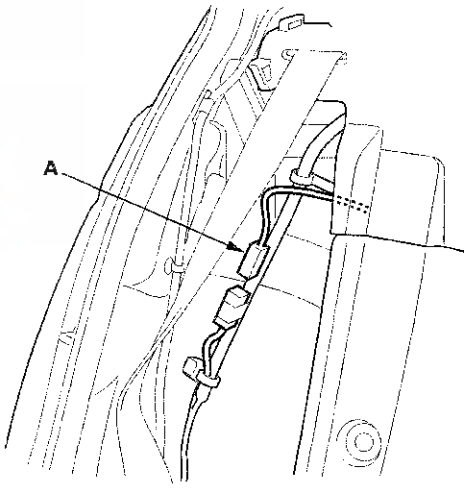

(cont'd)

Trim Removal/Installation - Rear Shelf Area (cont'd)

4. Remove the clips securing the rear shelf (A), and remove the washers (B) from between the rear shelf and body. 4-door is shown; 2-door is similar.

Fastener Locations

▷ : Clip, 3

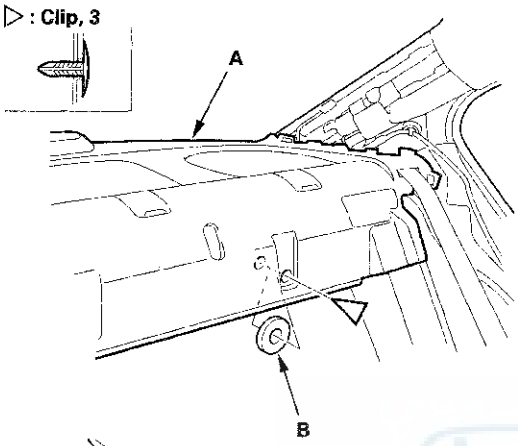

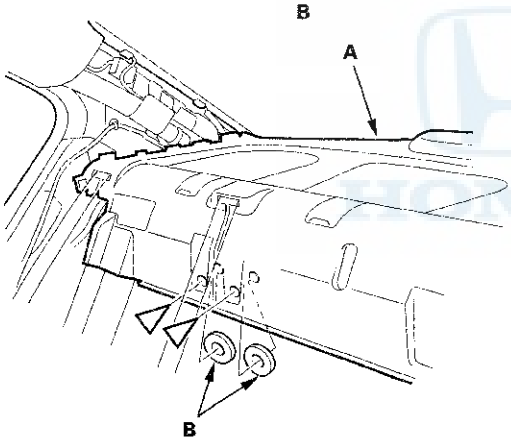

5. Remove the rear shelf (A). Be careful not to damage the speakers.

   -1 Pull up the entire rear shelf to detach the clips .
   -2 Lift the rear shelf upward and forward to release the rear hook (B) from the body, and release each anchor rod (C) out through the hole in the rear shelf.
   -3 Pull both rear seat belts (D) (4-door) and rear center seat belt (E) out through the slits (F) in the rear shelf.

2-door

Fastener Locations

▷ : Clip, 7 (Gray)

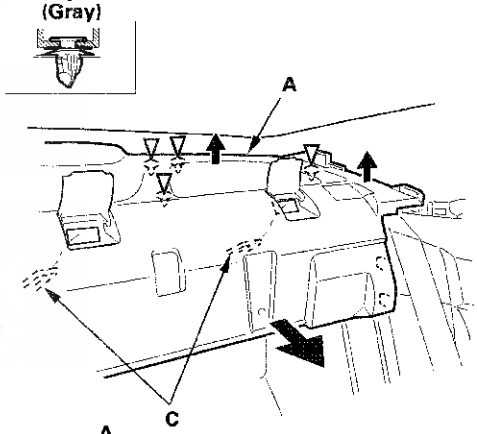

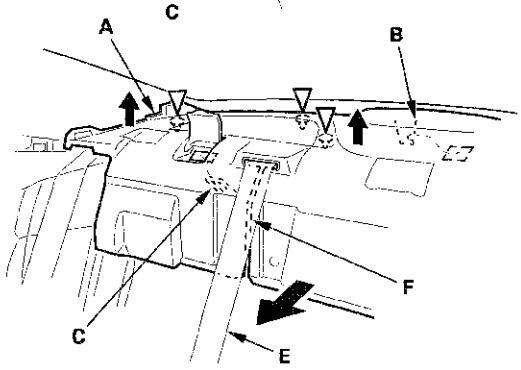

4-door

Fastener Locations

▷ : Clip, 8 (Gray)

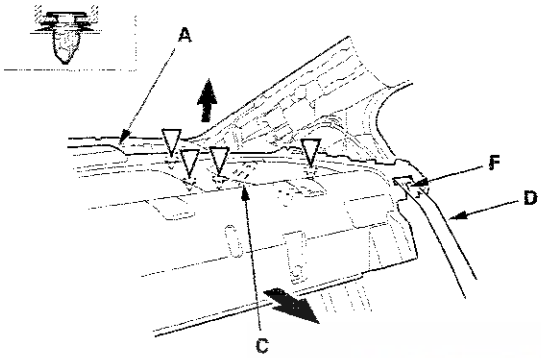

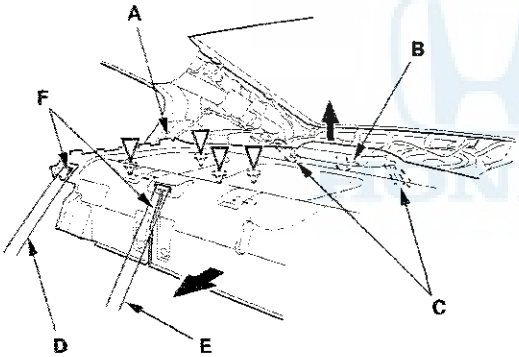

6. Detach the hooks (A) from under the rear shelf (B), and release the hooks (C), then remove the rear speaker grille (D). The left side is shown; the right side is symmetrical.

2-door

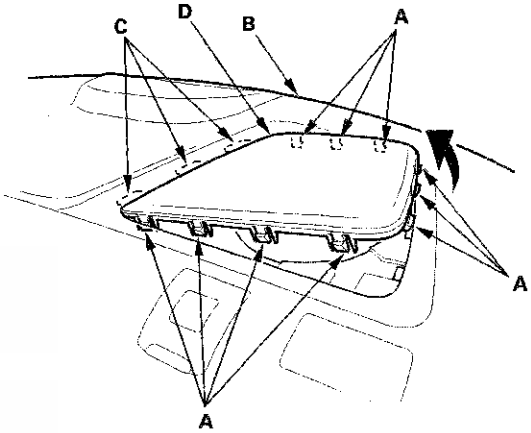

4-door

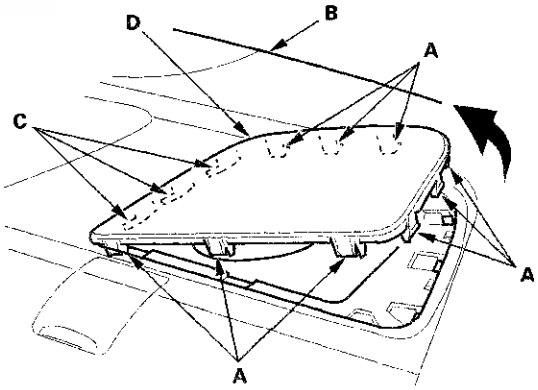

(cont'd)

Trim Removal/Installation - Rear Shelf Area (cont'd)

7. Install the shelf in the reverse order of removal, and note these items:

   - Using a clip remover, remove any clips left in the body, and reinstall them on the rear shelf.
   - If the clips are damaged or stress-whitened, replace them with new ones.
   - Be careful not to damage the speakers.
   - When installing the rear shelf, slip the rear seat belt and the rear center seat belt through the slits in the rear shelf properly.
   - Push the clips and the hooks into place securely.
   - Make sure the high mount brake light socket is connected securely, and the Active Noise Cancellation (ANC) rear microphone subharness connector (for some models) is plugged in properly.

Rear Parcel Shelf Dynamic Damper - 2-door

NOTE:
- Put on gloves to protect your hands.
- Take care not to scratch the body.

1. Remove the rear shelf.

2. Remove the bolts (A), then remove the rear parcel shelf dynamic damper (B). Take care not to hit the rear window when removing the bolts.

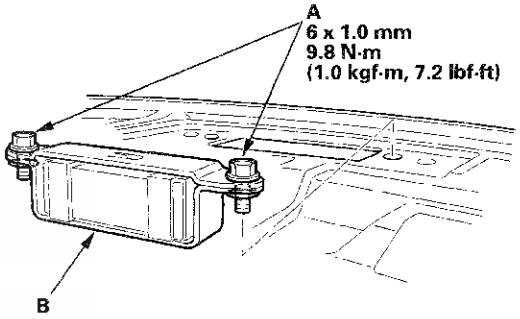

3. Install the damper in the reverse order of removal.

Trim Removal/Installation - Trunk Area

Special Tools Required
KTC trim tool set SOJATP2014 *
* Available through the Honda Tool and Equipment Program; call 888-424-6857

NOTE:
- Put on gloves to protect your hands.
- Take care not to bend or scratch the trim and the panels.
- Use the appropriate tool from the KTC trim tool set to avoid damage when removing components.

1. Fold the rear seat-back down.

2. Remove the clip that secures the spare tire lid (A) and the seat-back cover (B) to the body. 2-door is shown; 4-door is similar.

Fastener Location
▷ : **Clip, 1**

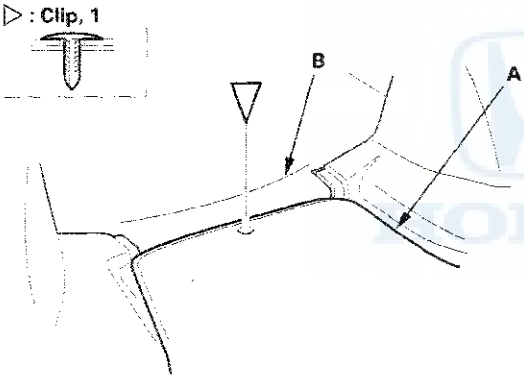

3. Remove the spare tire lid (A). 4-door is shown; 2-door is similar.

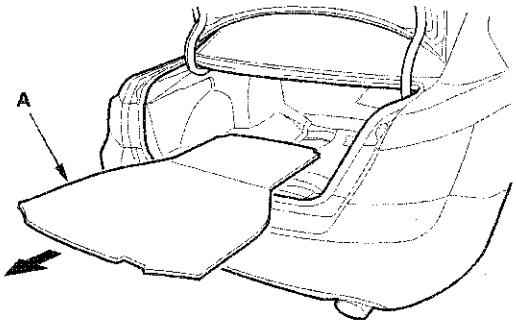

(cont'd)

Trim Removal/Installation - Trunk Area (cont'd)

4. Remove the trunk lid weatherstrip near the trunk rear trim panel.

5. Detach the clips (A, B), and release the hooks (C) and the projections (D) by pulling the trunk rear trim panel (E) up, then remove it.

2-door

Fastener Locations

A ▷ : Clip, 1 **B ▷ : Clip, 4 (Gray)**

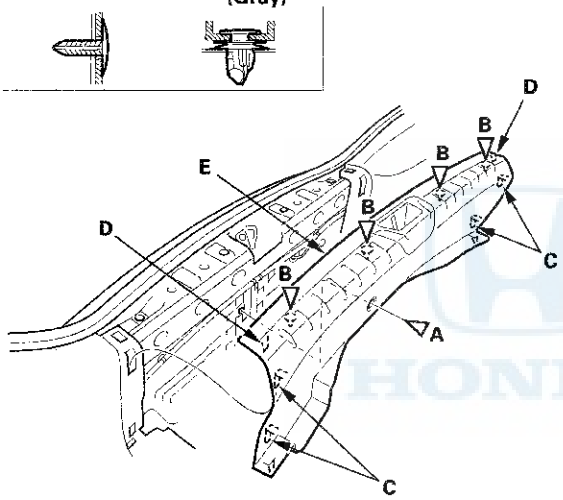

4-door

Fastener Locations

B ▷ : Clip, 4 (Gray)

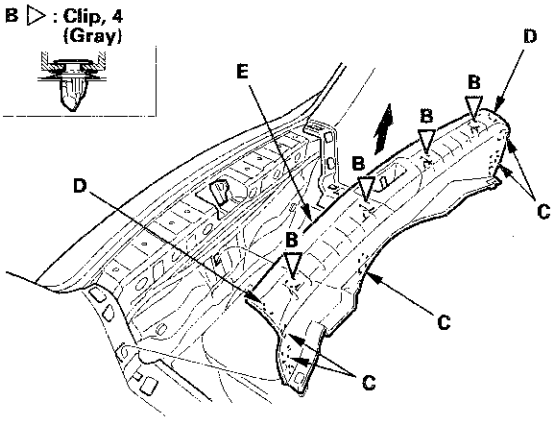

6. Remove the clips (A, B), and pull the trunk side trim panel (C) out from under the rear shelf (D) and the rear seat-back (E), then remove the panel. 4-door is shown; 2-door is similar.

Fastener Locations

A ▷ : Clip, 2 **B ▷ : Clip, 3**

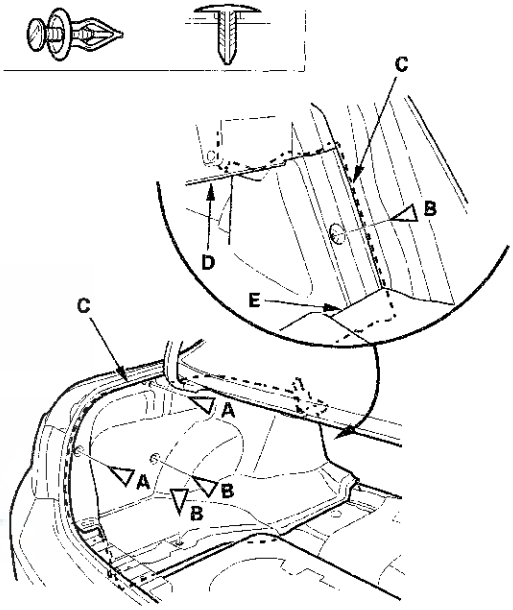

7. Remove the tool box spacer (A). 4-door is shown; 2-door is similar.

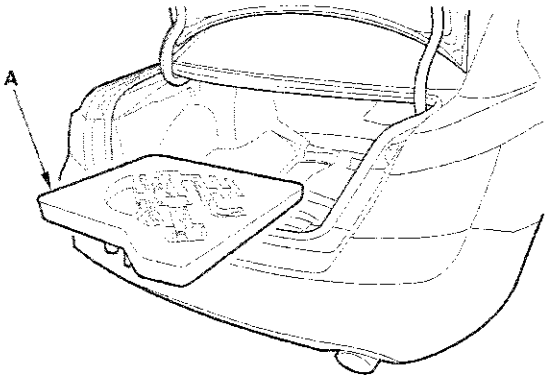

8. Remove the spare tire.

9. Remove the clips, then remove the spare tire pan carpet (A). 4-door is shown; 2-door is similar.

Fastener Locations

▷ : Clip, 2

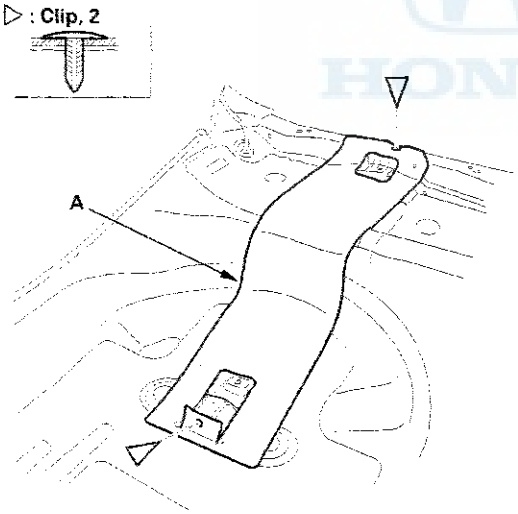

10. Detach the clips (A) and the harness holders (B) from the stud bolts, then remove the rear wheelhouse insulator (C). 4-door is shown; 2-door is similar.

Fastener Locations

A ▷ : Clip
2-door, 3
4-door, 2

B ▷ : Harness holder
2-door, 1
4-door, 2

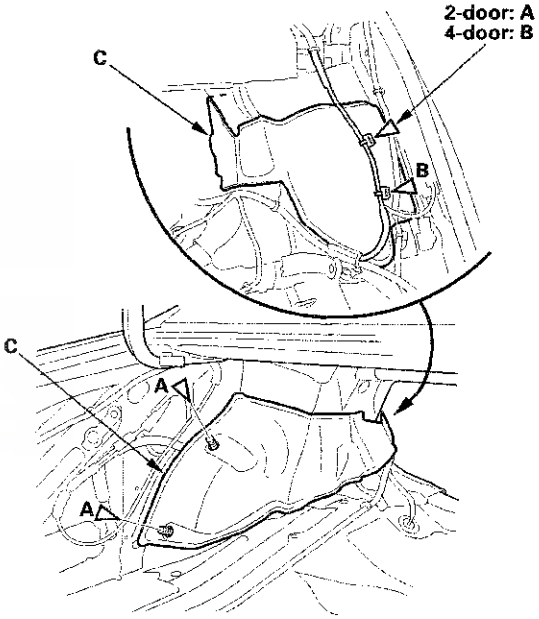

11. Install the trim in the reverse order of removal, and note these items:

- If the clips are damaged or stress-whitened, replace them with new ones.
- Push the clips and the hooks into place securely.

Trim Removal/Installation - Trunk Lid

Special Tools Required
KTC trim tool set SOJATP2014 *
* Available through the Honda Tool and Equipment Program; call 888-424-6857

NOTE:
- Put on gloves to protect your hands.
- Take care not to bend or scratch the panel.
- Use the appropriate tool from the KTC trim tool set to avoid damage when removing components.

1. Remove the clips (A, B), and pass the trunk lid hinges (C) of both sides and the trunk lid handle (D) through the slits (E) and the hole (F) in the trunk lid trim panel (G), then remove the panel.

2-door

Fastener Locations
A ▷ : Clip, 13

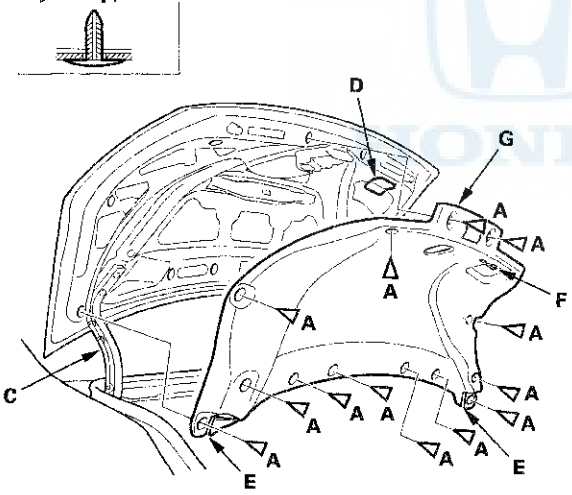

4-door

Fastener Locations
A ▷ : Clip, 11 **B ▷ : Clip, 1**

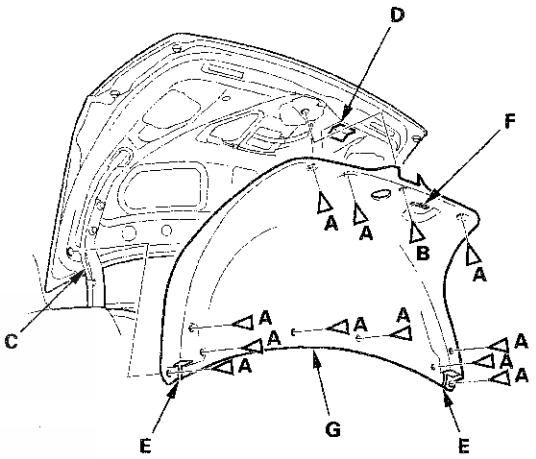

2. Pivot the trunk lid handle (A) down on the forward hooks (B) while prying the rear hook (C), then remove the handle.

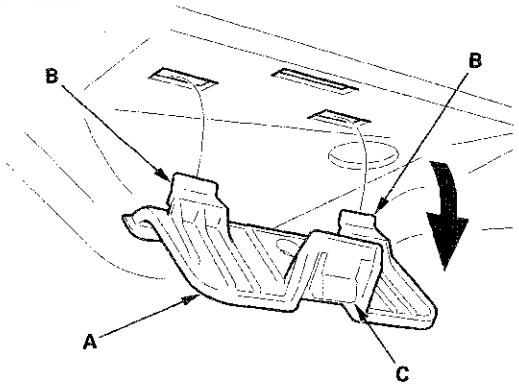

3. Install the panel in the reverse order of removal, and note these items:

   - If the clips are damaged or stress-whitened, replace them with new ones.
   - Push the clips and the hook into place securely.

Sunvisor Removal/Installation

NOTE:
- Put on gloves to protect your hands.
- Take care not to bend or scratch the headliner.

1. Insert a flat-tip screwdriver wrapped with protective tape through the hole in the front side of the bracket cover (A), and push in on the hook (B).

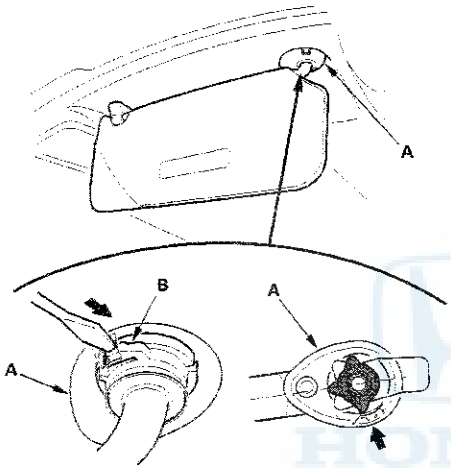

2. While pushing in on the hook (A), release the sunvisor (B) from the holder (C) and rotatate the tthe sunvisor backward about 45°. Make sure the hook slides in the bracket cover as you rotate the sunvisor.

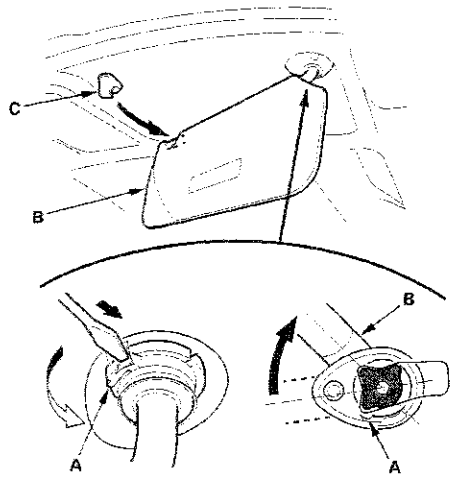

3. Pull the sunvisor (A) down to release the pin (B) of the bracket cover (C) from the hole in the body, and disconnect the vanity mirror light connector (D).

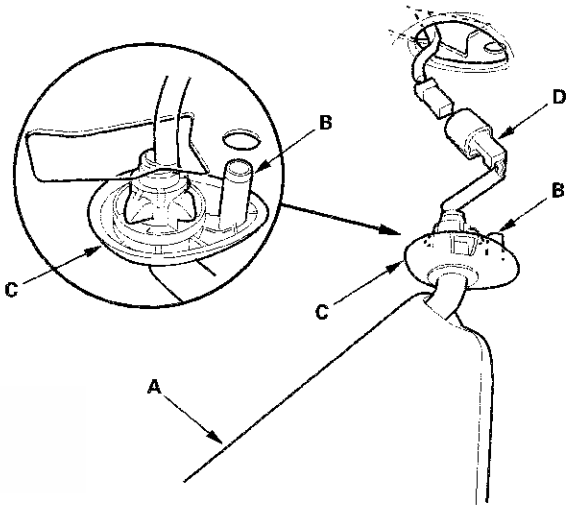

4. Turn the holder (A) 45 °counterclockwise, and remove it from the holder grommet (B) by pulling the holder down.

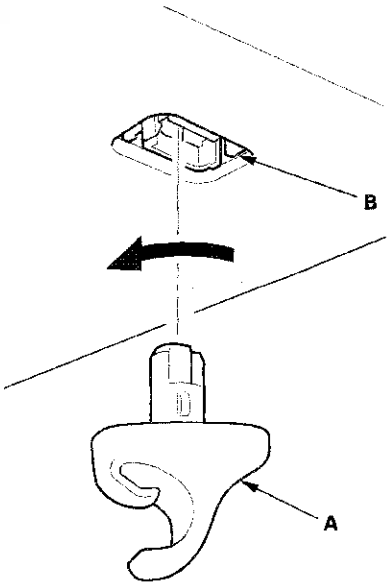

(cont'd)

Sunvisor Removal/Installation (cont'd)

5. Pry out the holder grommet (A) from the body by pinching its hooks (B).

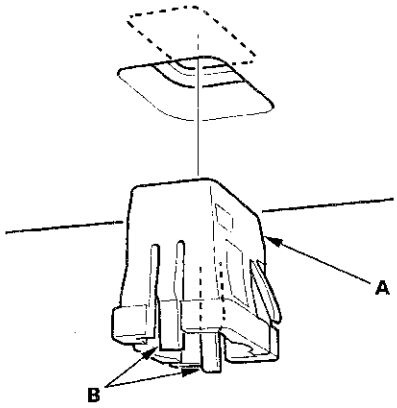

6. If the side curtain airbag has deployed, replace the sunvisor with a new one (see page 24-202).

7. If the side curtain airbag has not deployed, inspect the sunvisor for damage. A damaged sunvisor may cause the side curtain airbags to deploy improperly, possibly causing injury. Replace the sunvisor if it has any of the following damage:

   - Any cracks in the sunvisor bracket (A)
   - Any cracks in the sunvisor bracket cover (B)
   - Any bends or cracks in the sunvisor stay shaft (C)
   - Any cracks in the sunvisor base (D)
   - Any cracks in the vanity mirror base (E)

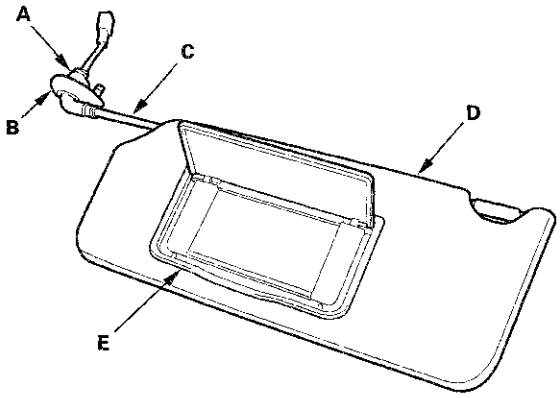

8. If the holder grommet is damaged or stress-whitened, replace it with a new one.

9. Install the holder (A) to the holder grommet (B) by turning it 45 ° clockwise, and install them to the body as an assembly by pushing it until the hooks (C) snap into place securely.

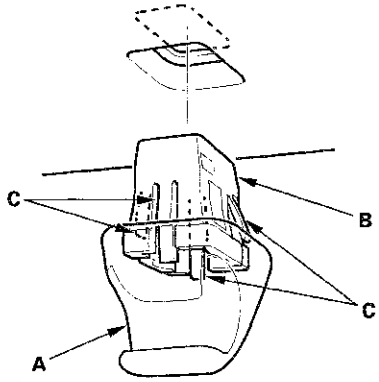

10. Connect the vanity mirror light connector (A), and set the sunvisor (B) by inserting the bracket (C) and the pin (D) of the bracket cover (E) into the holes in the body.

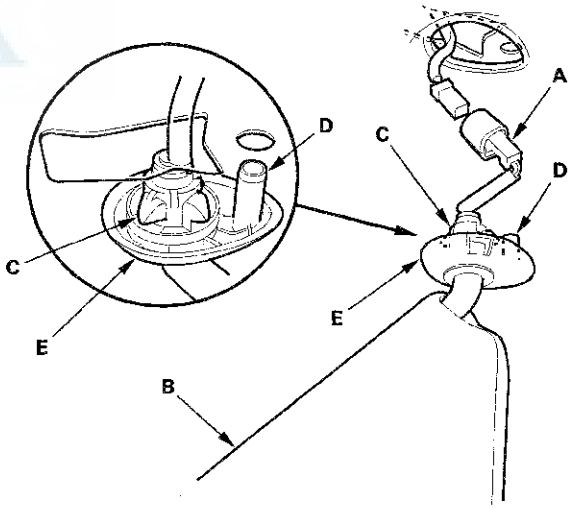

11. While holding the bracket cover (A), rotate the sunvisor (B) forward until the hook (C) snaps into place. Then make sure the sunvisor does not come off the body by pulling it down. Set the sunvisor to the holder (D).

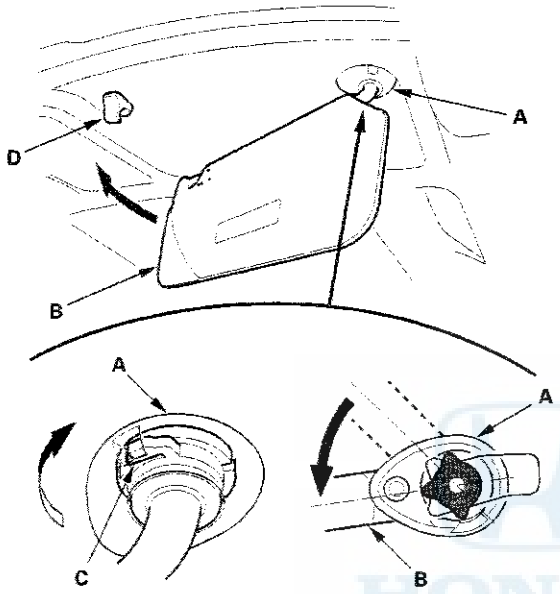

Grab Handle Removal/Installation

Special Tools Required
KTC trim tool set SOJATP2014 *
* Available through the Honda Tool and Equipment Program; call 888-424-6857

NOTE: Use the appropriate tool from the KTC trim tool set to avoid damage when removing components.

1. Lower the grab handle (A), then pull out the caps (B) by prying up at the notches (C) with a small flat-tip screwdriver.

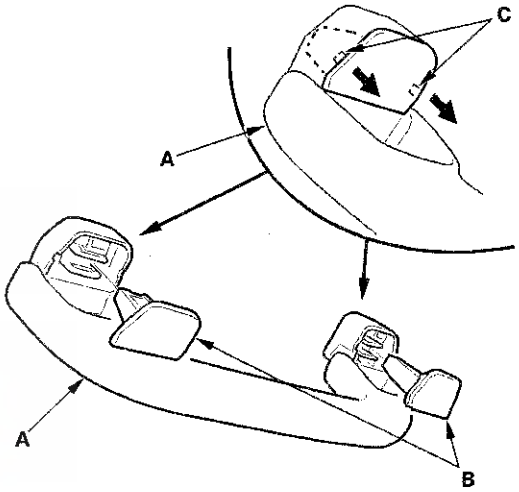

2. While pinching the clips (A), release the hooks (B), then remove the grab handle (C).

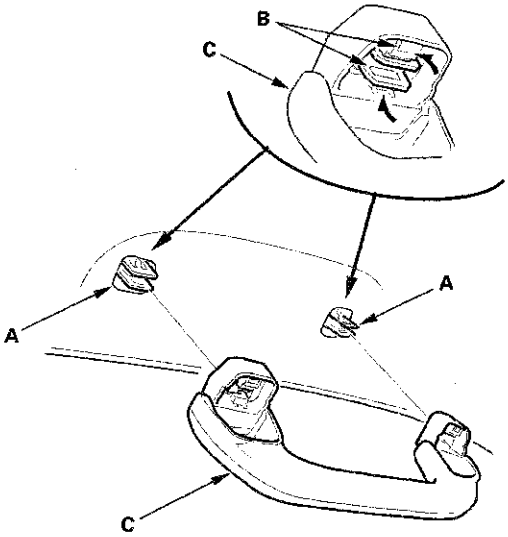

(cont'd)

Grab Handle Removal/Installation (cont'd)

3. Using a pair of pliers, remove the clips (A) by pinching the hooks.

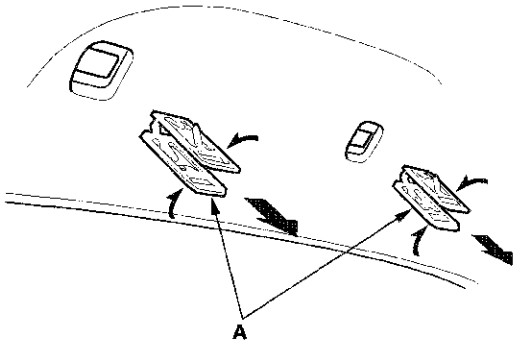

4. If the side curtain airbag has deployed, replace the grab handle with a new one (see page 24-202).

5. If the side curtain airbag has not deployed, to prevent the side curtain airbags from deploying improperly and possibly causing injury, inspect removed pieces and replace them if they have any of these types of damage:

   - Any cracks or damage in the grab handle (A).
   - Any cracks or stress-whitening in the caps (B).

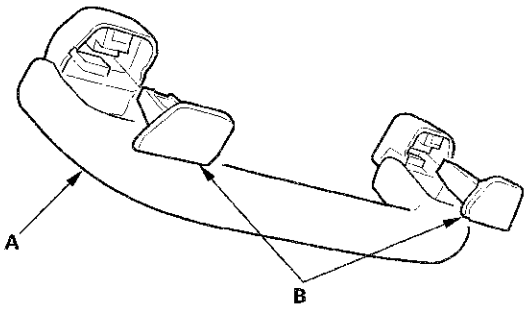

6. Install the clips (A) to the grab handle (B), then install the caps (C) fully into the clips.

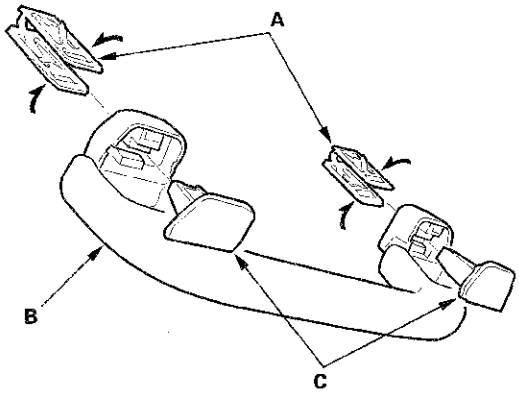

7. Position the grab handle (A) on the bracket (B), and push on the grab handle until the clips (C) snap into place securely.

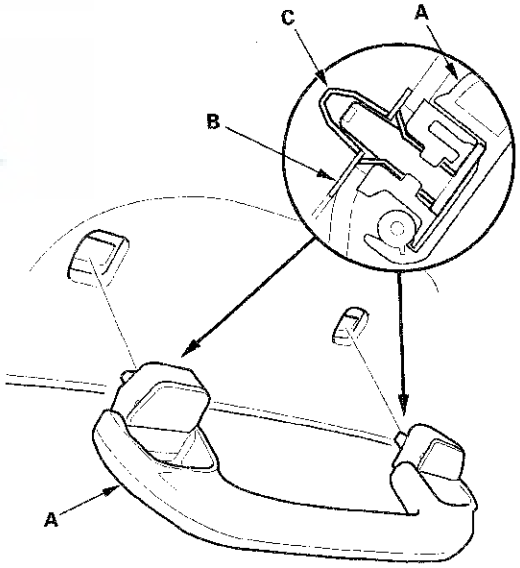

Headliner Removal/Installation

Special Tools Required
KTC trim tool set SOJATP2014 *
* Available through the Honda Tool and Equipment Program; call 888-424-6857

SRS components are located in this area. Review the SRS component locations, 2-door (see page 24-21), 4-door (see page 24-19) and the precautions and procedures (see page 24-23) before doing repairs or service.

NOTE:
- Put on gloves to protect your hands.
- Take care not to bend and scratch the headliner.
- Be careful not to damage the dashboard and other interior trim.
- Use the appropriate tool from the KTC trim tool set to avoid damage when removing components.

1. Remove the front seat belt lower anchor from the driver's seat, and remove the driver's seat mounting bolts (see page 20-181).
2. Do the battery terminal disconnection procedure (see page 22-89), then wait at least 3 minutes before beginning work.
3. Remove these items:
   - 2-door:
     - A-pillar trim, both sides (see page 20-101)
     - Ceiling light (see page 22-233)
     - B-pillar upper trim (see page 20-105)
     - C-pillar trim (see page 20-110)
     - Sunvisors and holders, both sides (see page 20-127)
     - Grab handles, two places (see page 20-129)
     - Driver's dashboard lower cover (see page 20-153)
     - Passenger's kick panel (see page 20-97)
     - Glove box (see page 20-161)
   - 4-door:
     - A-pillar trim, both sides (see page 20-101)
     - Ceiling light (see page 22-233)
     - B-pillar lower trim, both sides (see page 20-107)
     - B-pillar upper trim, both sides (see page 20-107)
     - C-pillar trim, both sides (see page 20-115)
     - Sunvisors and holders, both sides (see page 20-127)
     - Grab handles, four places (see page 20-129)
     - Driver's dashboard lower cover (see page 20-153)
     - Passenger's kick panel (see page 20-99)
     - Glove box (see page 20-161)
     - Driver's front seat (see page 20-181)
4. Remove the roof console (A).
   - 1 Remove the lenses (B).
   - 2 Remove the screws (C), then pull out the front individual map light (D).
   - 3 Disconnect the front individual map light connector (E). If equipped, disconnect the moonroof switch connector (F).
   - 4 Remove the screws (G). Pull out the front side of the console, and release the rear hooks (H).
   - 5 If equipped, disconnect the navigation microphone connector or the Active Noise Cancellation (ANC) front microphone connector (I).

Fastener Locations

C ▶ : Screw, 2 (Silver) **G ▶ : Screw, 2 (Black)**

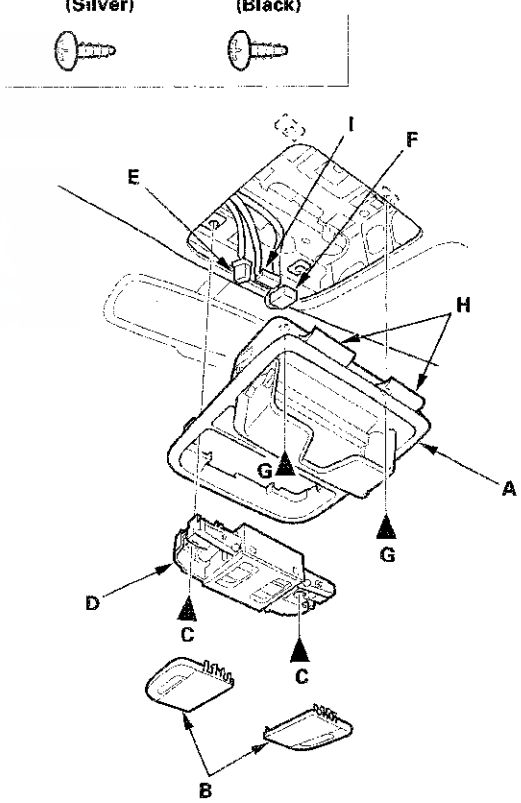

(cont'd)

Headliner Removal/Installation (cont'd)

5. With automatic dimming rearview mirror: Remove the rearview mirror harness cover. Disconnect the connector from the rearview mirror, and release the wire harness from the rearview mirror harness cover base (see page 20-58).

6. If necessary, remove the roof console screw grommet (A) by pinching out the hooks (B).

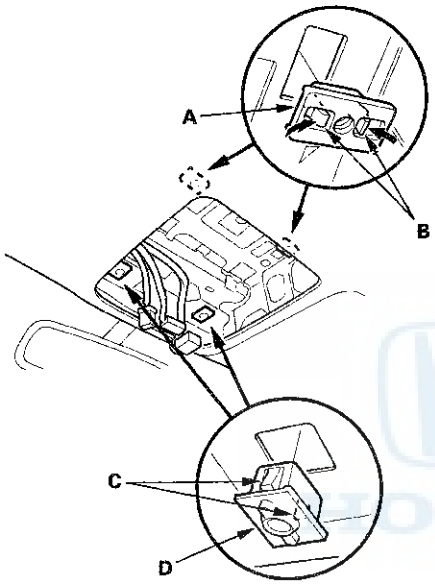

7. If necessary, detach the hooks (C) by prying out the map light clip (D), then remove the clip.

8. Remove the roof wire harness (A) by detaching the harness clips (B) from the driver's side A-pillar (C).

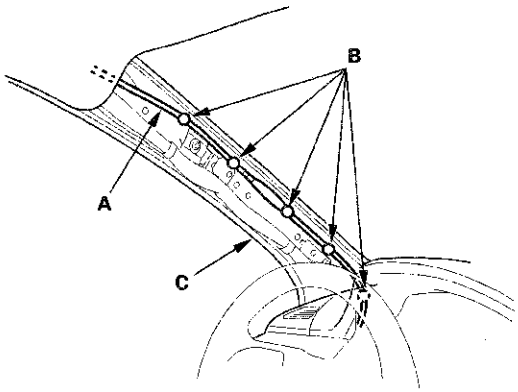

9. Remove the antenna lead (A) by detaching the harness clips (B) from the passenger's side A-pillar (C).

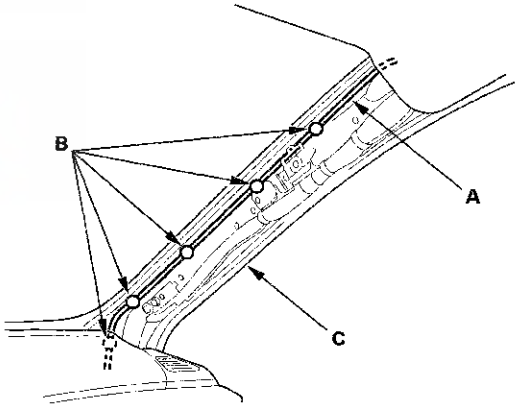

10. From under the driver's dash, remove the bolt, and detach the hook (A), then move the driver's under-dash fuse/relay box (B).

Fastener Location

▶ : **Bolt, 1**

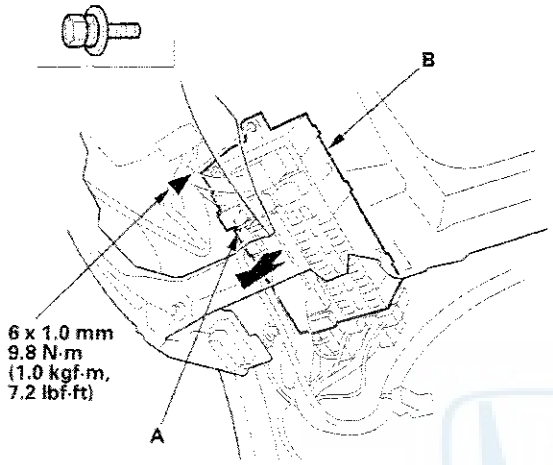

11. From under the driver's dash, disconnect the roof wire harness connector(s) (A), and detach the harness clip (B) and the harness holder (C).

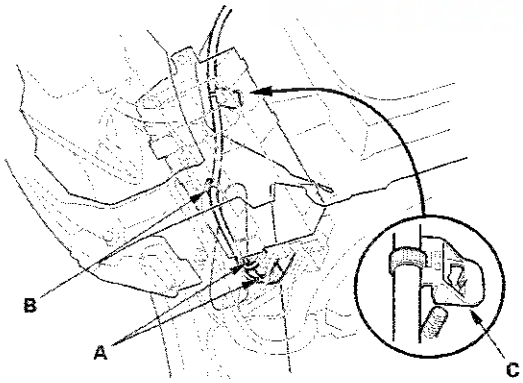

12. From under the passenger's dash, disconnect and detach the antenna lead connector (A), and detach the harness clip (B).

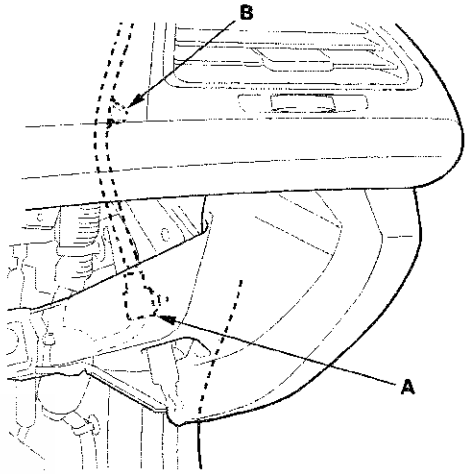

13. 2-door: From the right C-pillar area, disconnect the antenna lead connector (A) from the antenna module unit (B), and detach the harness clip (C). Pass the harness clip and the connector through the gap between the projection (D) of the side curtain airbag bracket and the glass antenna connector (E) by pulling the antenna lead (F) to the headliner side.

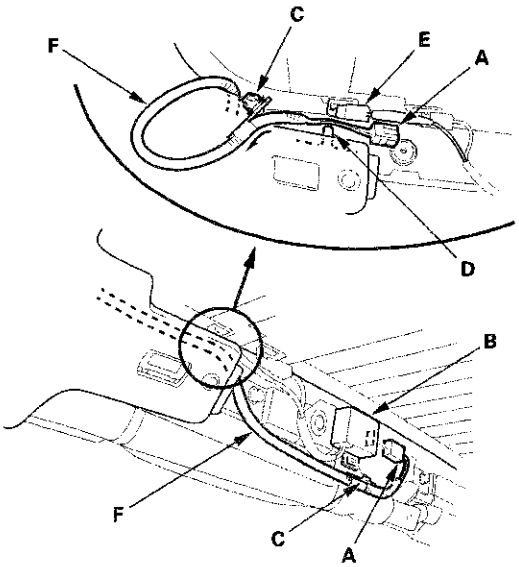

(cont'd)

Headliner Removal/Installation (cont'd)

14. 4-door: From the right C-pillar area, disconnect the antenna lead connector (A) from the antenna module unit (B), and detach the harness clip (C).

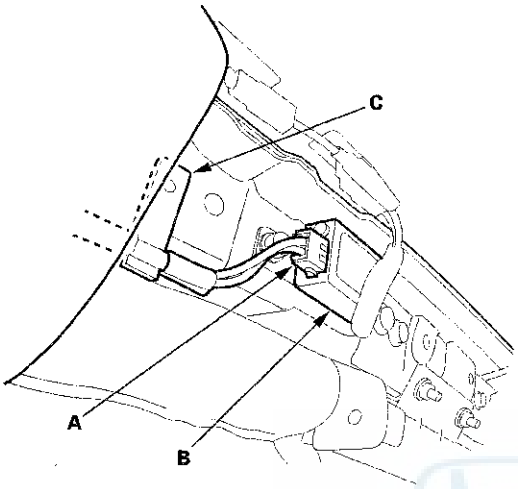

15. For some models: From roof console opening, disconnect the moonroof subharness connector (A), and detach the harness clip (B).

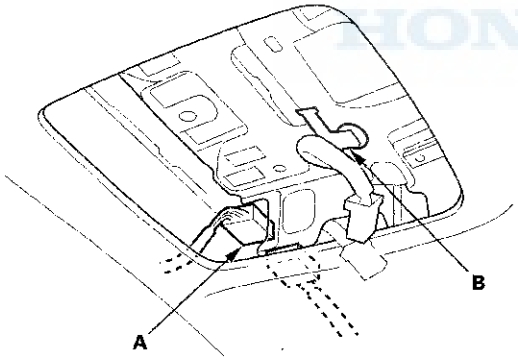

16. 2-door: Slide both front seats all the way back, and recline their seat-backs fully.

17. 4-door: Slide the passenger's front seat all the way back, and recline the seat-back fully.

18. 2-door: Lower the headliner (A).

    -1 Remove the door opening seals (B) from each roof portion.
    -2 From both C-pillar areas, detach the hooks (C) of the headliner brackets (D) from the holes in the side curtain airbag brackets.
    -3 With the help of an assistant, detach the rear clips (E) by pulling the rear portion of the headliner down.
    -4 With moonroof: Detach the front clips (F), the magnet (G), and the Velcro fasteners (H) by lowering the moonroof opening edge of the headliner.

Without moonroof

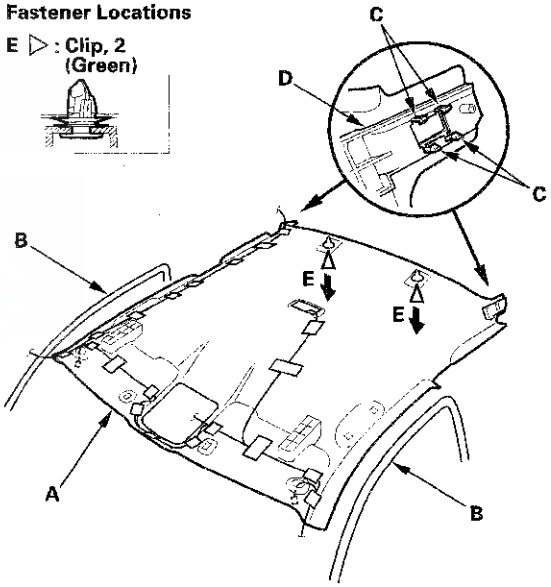

With moonroof

Fastener Locations

E ▷ : Clip, 2 (Green) F ▷ : Clip, 2 (Gray)

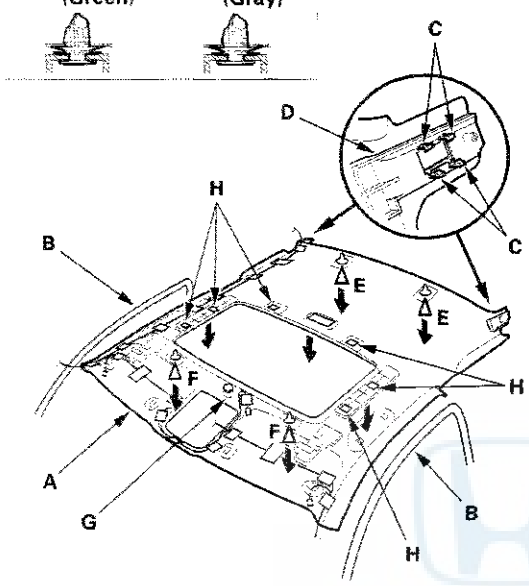

19. 4-door: Lower the headliner (A).

    -1 Remove the front door opening seals (B) and rear door opening seals (C) from each roof portion.
    -2 With the help of an assistant, detach the rear clips (D) by pulling the rear portion of the headliner down.
    -3 With moonroof: Detach the front clips (E), the magnets (F), and the Velcro fasteners (G) by lowering the moonroof opening edge of the headliner.

Without moonroof

Fastener Locations

D ▷ : Clip, 2 (Gray)

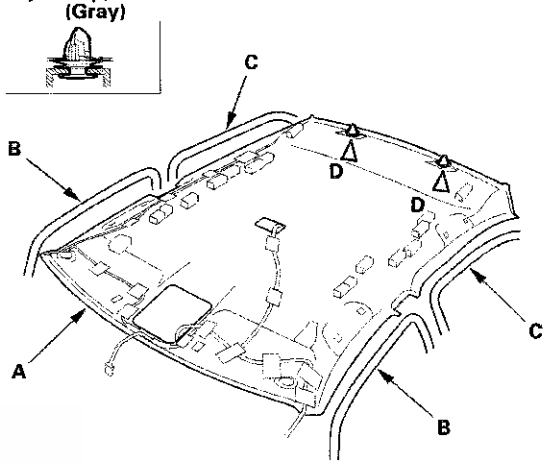

With moonroof

Fastener Locations

D, E ▷ : Clip, 4 (Gray)

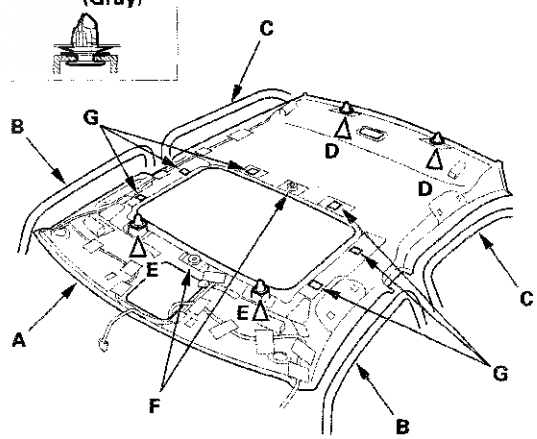

(cont'd)

Headliner Removal/Installation (cont'd)

20. 2-door: Remove the headliner (A) from the vehicle.

    -1 Lower the headliner.
    -2 Move the headliner rearward.
    -3 Lower the front of the headliner below the steering wheel.
    -4 Rotate the headliner so as to point the right front corner to the outside of the passenger's door and the left rear corner to the outside of the driver's door.
    -5 Pull the headliner along with the roof wire harness (B) and the antenna lead (C) out through the passenger's door.

    NOTE: Do not bend the headliner. Bending the headliner will crease and damage it.

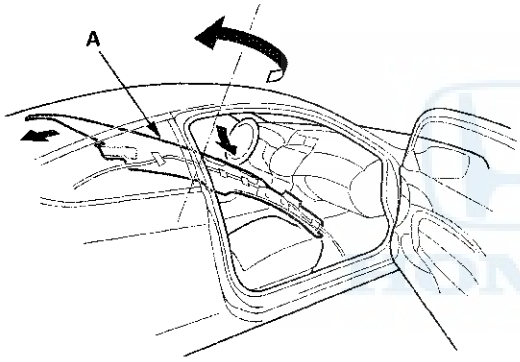

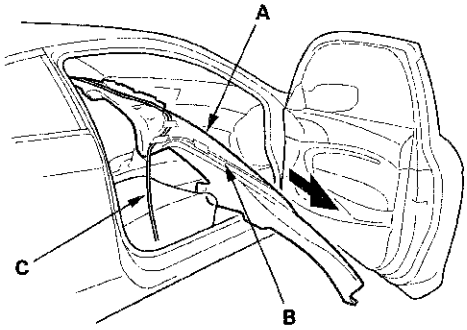

21. 4-door: Remove the headliner (A) from the vehicle.

    -1 Lower the headliner.
    -2 Move the headliner rearward.
    -3 Lower the front of the headliner below the steering wheel.
    -4 Rotate the headliner so as to point the right front corner to the outside of the passenger's front door and the left rear corner to the outside of the left passenger's rear door.
    -5 Pull the headliner along with the roof wire harness (B) and the antenna lead (C) out through the left passenger's rear door.

    NOTE: Do not bend the headliner. Bending the headliner will crease and damage it.

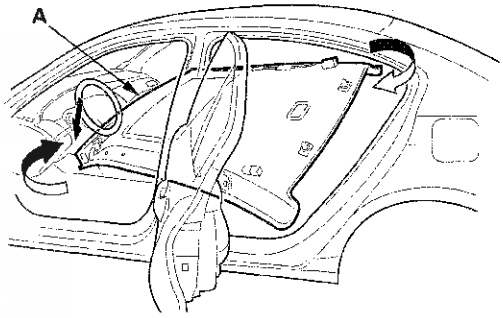

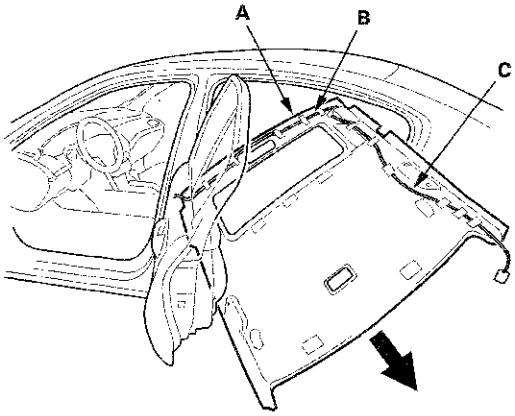

22. If necessary, remove the cushion tape (A, B, C) fastening the roof wire harness (D) and the antenna lead (E) to the headliner (F), then remove them from the headliner.

Cushion tape A: P/N 91902-S2X-003
100 x 50 mm (3.94 x 1.97 in.)
Cushion tape B: P/N 91902-S3N-003
50 x 50 mm (1.97 x 1.97 in.)
Cushion tape C: P/N 91903-SJA-000
50 x 25 mm (1.97 x 0.98 in.)

Without moonroof - 2-door

Fastener Locations

A, B, C▷ : Cushion tape

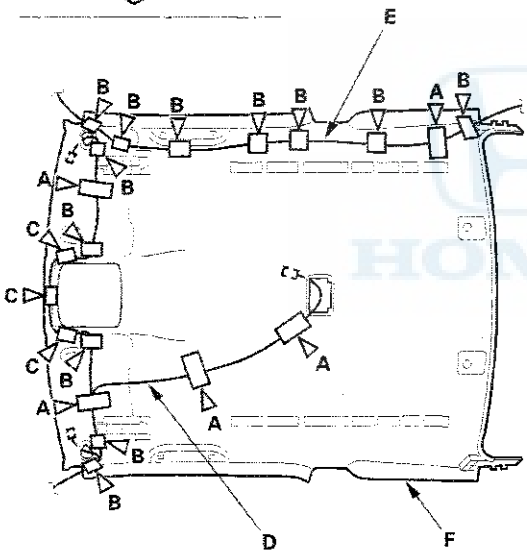

With moonroof - 2-door

Fastener Locations

A, B, C▷ : Cushion tape

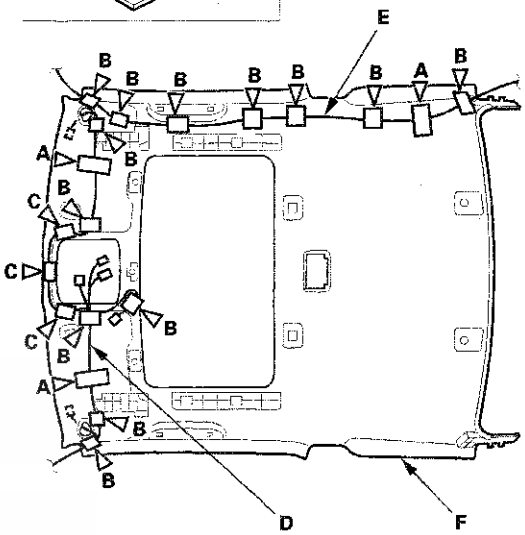

(cont'd)

Headliner Removal/Installation (cont'd)

Without moonroof - 4-door

Fastener Locations

A, B, C▷ : Cushion tape

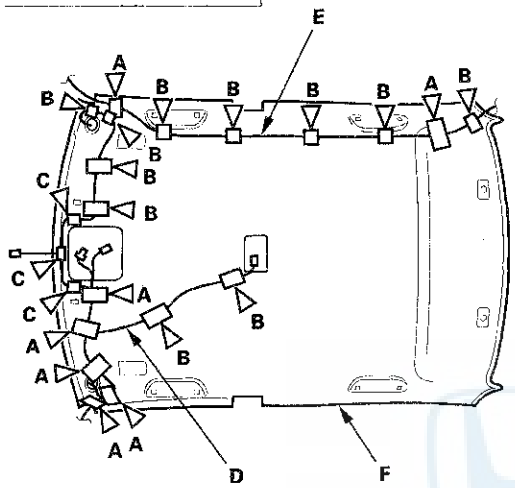

With moonroof - 4-door

Fastener Locations

A, B, C▷ : Cushion tape

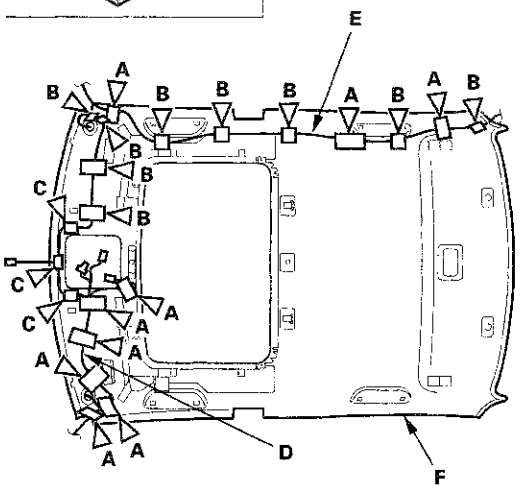

23. Install the headliner in the reverse order of removal, and note these items:

- If the side curtain airbag has deployed, replace the headliner and removed trim pieces with new ones (see page 24-202).
- To prevent the side curtain airbags from deploying improperly and possibly causing injury, inspect removed pieces and replace them if they have any of these types of damage:
  - Any crease or tears in the headliner (A)
  - Any cracks or breakages in the grab handle (B)
  - Any damages around the grab handle holes (C) or sunvisor holes in the headliner
  - Any cracks in the sunvisor stay base (D)
  - Any cracks in the sunvisor bracket cover (E)
  - Any bends or cracks in the sunvisor stay shaft (F)
  - Any cracks in the sunvisor base (G)
  - Any cracks or breakages in the vanity mirror base (H)
  - Any fastener bases (I), stiffeners (J), magnets (K), and clip bases (L) which have come off the headliner
  - 2-door: Any headliner brackets (M) which have come off the headliner
- When installing the grab handle, push on the handle against the bracket (N) until the clips (O) snap into place securely.
- If the clips are damaged or stress-whitened, replace them with new ones.
- Replace the removed cushion tape with new ones.
- Check that both sides of the headliner are securely attached to the trim.
- Make sure the headliner overlaps the trim pieces correctly (see page 24-204).
- When reinstalling the headliner through the front passenger's door opening (2-door) or the left rear door opening (4-door), be careful not to fold or bend it. Also, be careful not to scratch the body.
- If the map light clips are removed, replace them with new ones.
- If the roof console screw grommets are removed or if they are damaged or stress-whitened, replace them with new ones.

- Reinstall the roof console (P) as following procedures:
  - Install the roof console screw grommets (Q) to the console with the screws (R).
  - If equipped, connect the navigation microphone connector or the Active Noise Cancellation (ANC) front microphone connector (S).
  - Set the rear hooks (T), and fit the grommets into the holes in the body, then push on the console until the grommets snap into place securely.
- Do the battery terminal reconnection procedure (see page 22-89).
- Check for any DTCs that may have been set during repairs, and clear them.

Headliner - 2-door

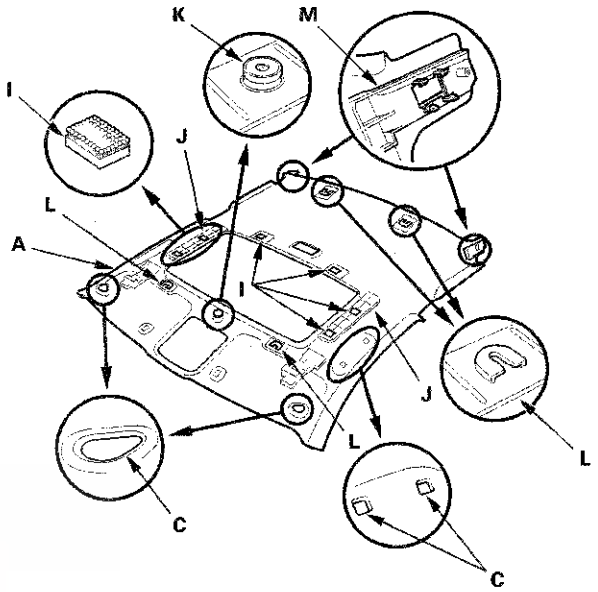

Headliner - 4-door

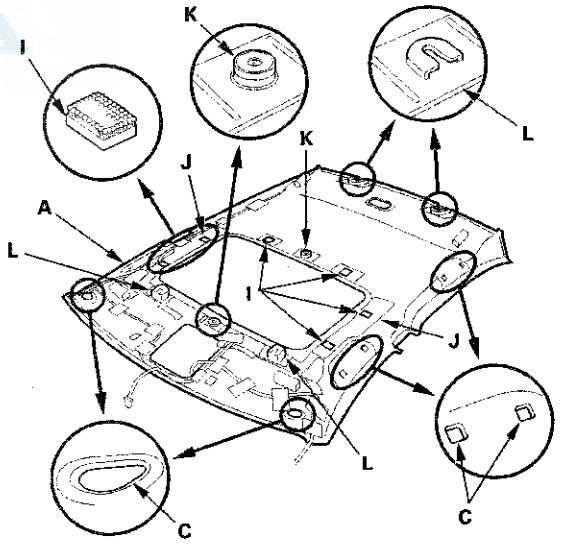

(cont'd)

Headliner Removal/Installation (cont'd)

Grab handle

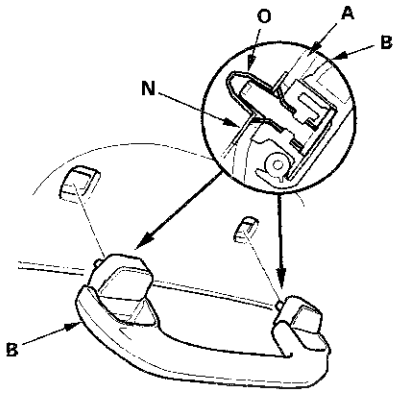

Sunvisor

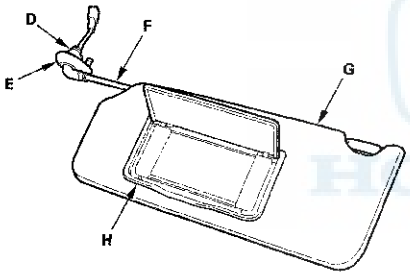

Roof console

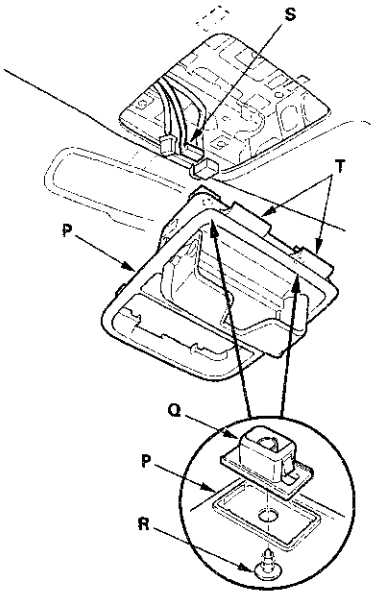

Carpet Replacement

Special Tools Required
KTC trim tool set SOJATP2014 *
* Available through the Honda Tool and Equipment Program; call 888-424-6857

One-piece Type Carpet (4-door)/Two-piece Type Front Carpet (2-door/4-door)

SRS components are located in this area. Review the SRS component locations, 2-door (see page 24-21), 4-door (see page 24-19) and the precautions and procedures (see page 24-23) before doing repairs or service.

NOTE:
- Put on gloves to protect your hands.
- Use the appropriate tool from the KTC trim tool set to avoid damage when removing components.
- Take care not to damage, wrinkle, or twist the carpet.
- Be careful not to damage the dashboard and other interior trim pieces.

1. Remove the front seat belt lower anchors from the front seats (except 2-door driver's seat), and remove the seat mounting bolts (see page 20-181).

2. Do the battery terminal disconnection procedure (see page 22-89), then wait at least 3 minutes before beginning work.

3. Remove these items:

   - Front seats, both (see page 20-181)
   - Rear seat cushion (see page 20-225)
   - Door sill trim, both sides, 2-door (see page 20-97)
   - Front door sill trim, both sides, 4-door (see page 20-99)
   - Rear door sill trim, both sides, 4-door (see page 20-100)
   - Kick panels, both sides:
     – 2-door (see step 5 on page 20-98)
     – 4-door (see step 5 on page 20-99)
   - B-pillar lower trim, 4-door (see page 20-107)
   - Center console (see page 20-148)
   - Steering joint cover (see page 17-28)
   - Parking brake lever (see page 19-41)
   - Driver's dashboard center lower cover (see page 20-157)
   - Passenger's dashboard center lower cover (see page 20-157)

4. Remove the footrest (A) by pulling it to detach the clips.

Fastener Locations

▷ : Clip, 2

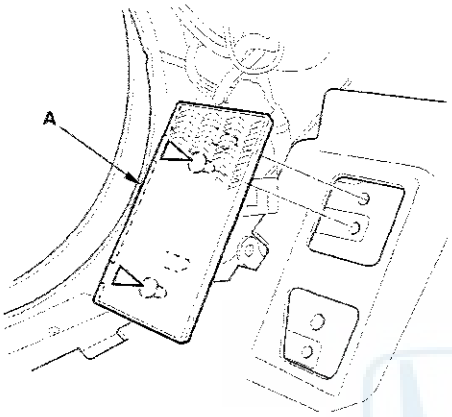

5. M/T model: Remove the bolts, then move the shift lever housing as needed (see page 13-65).

6. A/T model: Remove the bolts securing the shift lever mounting bracket (see page 14-267).

7. Detach the harness clips (A) fastening the dashboard wire harness (B), and using a TORX T30 bit, remove the ground bolt (C). Disconnect the yaw rate-lateral acceleration sensor connector (D).

A/T model

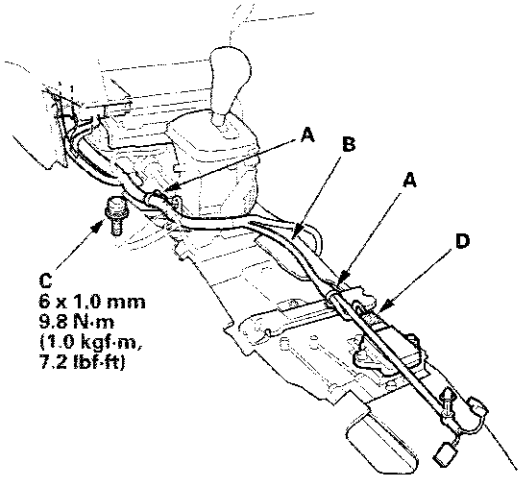

M/T model

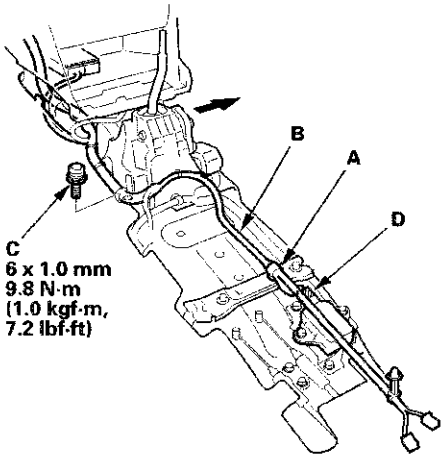

8. Remove the clip, and remove the right rear heater joint duct (A). Disconnect the floor wire harness connectors (B), and detach the harness clips (C) fastening the floor wire harness (D).

A/T model

Fastener Location

▷ : Clip, 1

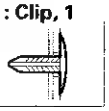

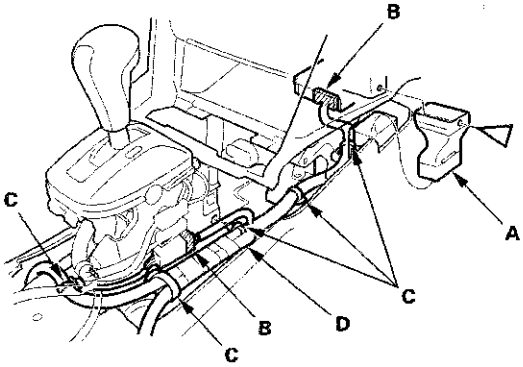

(cont'd)

Carpet Replacement (cont'd)

M/T model

Fastener Location

▷ : Clip, 1

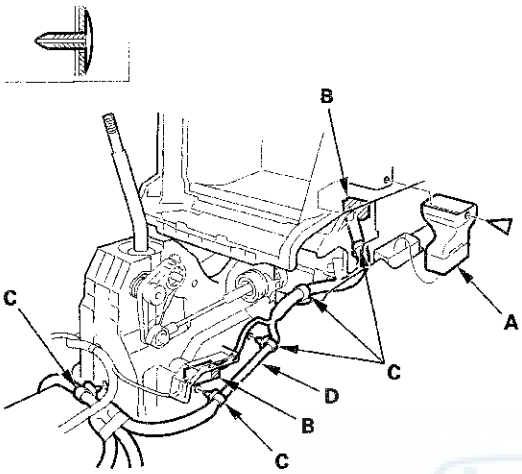

9. Release the Velcro fastener (A), and release the carpet (B) from the hooks (C) of both rear heater ducts. On the two-piece type carpet, remove the clips (D). Detach the clips (E) fastening the carpet to both door sill areas:

- Replace the clips (E) with new ones.
- 4-door is shown; 2-door is similar.

One-piece type carpet (4-door)

Fastener Locations

E ▷ : Clip, 5 (Pink)

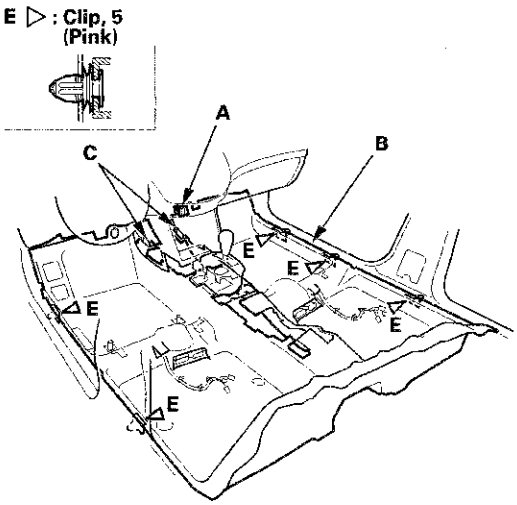

Two-piece type front carpet (2-door/4-door)

Fastener Locations

D ▷ : Clip, 2 E ▷ : Clip, 3 (Pink)

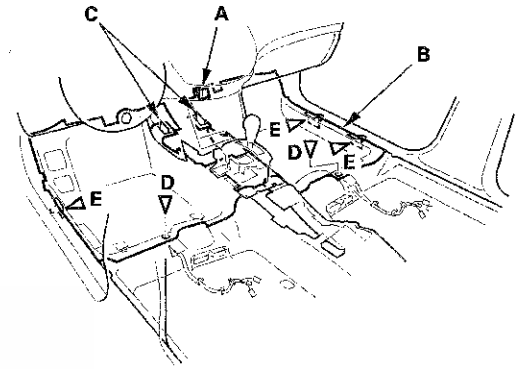

10. While lifting the shift lever (A) up, pull the carpet (B) out from under the dashboard, then remove the carpet. One-piece type carpet: Pull the seat harnesses (C) out through the holes in the carpet.

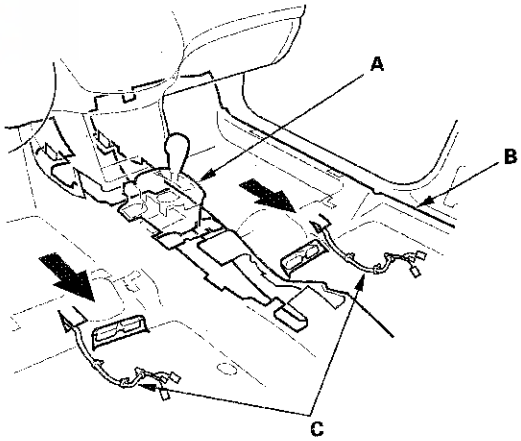

11. If necessary, from back of the carpet, release the hooks (A) of the base (B) with a flat-tip screwdriver, and push up the projections of the holder from the base to remove the floor mat holder (C).

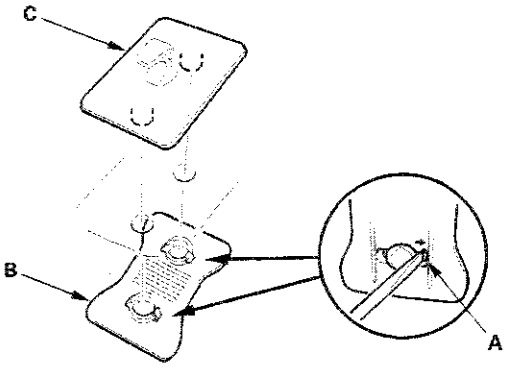

12. If necessary, remove the staples (A) by prying them with a flat-tip screwdriver, then remove the hook (B).

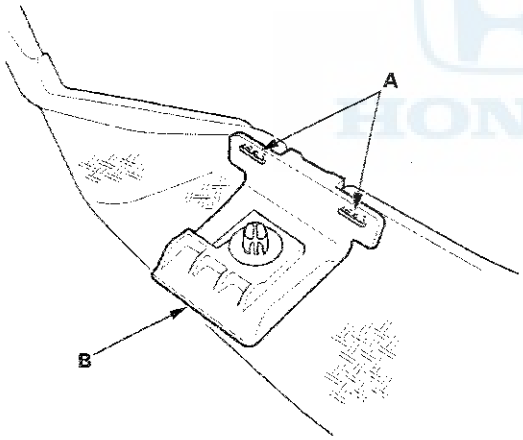

13. If the hook (A) is removed, reinstall the hook to the carpet (B) with new staples (C); fit the projection (D) of the hook to the notch in the carpet, then staple the hook. Bend the projected staple with a flat-tip screwdriver.

Staple (for one-piece type carpet):
Height 9 mm (0.35 in.)
Width 12 mm (0.47 in.)
Thickness 0.5 mm (0.02 in.)
Staple (for two-piece type front carpet):
Height 13 mm (0.51 in.)
Width 12 mm (0.47 in.)
Thickness 0.5 mm (0.02 in.)

One-piece type carpet **Two-piece type carpet**

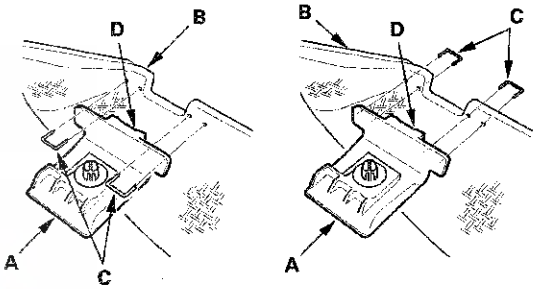

14. Install the carpet in the reverse order of removal, and note these items:

- Take care not to damage, wrinkle or twist the carpet.
- Make sure the seat harnesses are routed correctly (one-piece type carpet).
- Slip the holes in the carpet over the rear heater ducts (one-piece type carpet).
- If the clips fastening the carpet to the floor are damaged or stress-whitened, replace them with new ones (two-piece type front carpet).
- Replace the clips fastening the carpet to both door sill areas with new ones.
- Push the Velcro fastener and the clips into place securely.
- Do the battery terminal reconnection procedure (see page 22-89).
- If necessary, adjust the parking brake cable (see page 19-7).

(cont'd)

Carpet Replacement (cont'd)

Two-piece Type Rear Carpet

SRS components are located in this area. Review the SRS component locations, 2-door (see page 24-21), 4-door (see page 24-19) and the precautions and procedures (see page 24-23) before doing repairs or service.

NOTE:
- Put on gloves to protect your hands.
- Use the appropriate tool from the KTC trim tool set to avoid damage when removing components.
- Take care not to damage, wrinkle, or twist the carpet.
- Be careful not to damage the dashboard and other interior trim pieces.

1. Remove the front seat belt lower anchors from the front seats (except 2-door driver's seat), and remove the seat mounting bolts (see page 20-181).

2. Do the battery terminal disconnection procedure (see page 22-89), then wait at least 3 minutes before beginning work.

3. Remove these items:

   - Front seats, both sides (see page 20-181)
   - Rear seat cushion (see page 20-225)
   - Door sill trim, both sides, 2-door (see page 20-97)
   - Driver's front seat belt lower anchor, 2-door (see step 2 on page 24-5)
   - Front door sill trim, both sides, 4-door (see page 20-99)
   - Rear door sill trim, both sides, 4-door (see page 20-100)
   - B-pillar lower trim, 4-door (see page 20-107)
   - Center console (see page 20-148)

4. Remove the rear carpet (A).

   -1 Remove the clips (B).
   -2 On bottom of both rear side trim panels (C) (2-door) or bottom of both B-pillars (4-door), pull the carpet out to detach the clips (D).
   -3 2-door: Pull out the edge of the carpet from under both rear side trim panels.
   -4 Pull the seat harnesses (E) out through the holes in the carpet.
   -5 Remove the grommets (F) from the body.

   NOTE: Replace the clip (D) and the grommet (F) as an assembly with a new one.

2-door

Fastener Locations

B ▷ : Clip, 2 D ▷ : Clip, 2

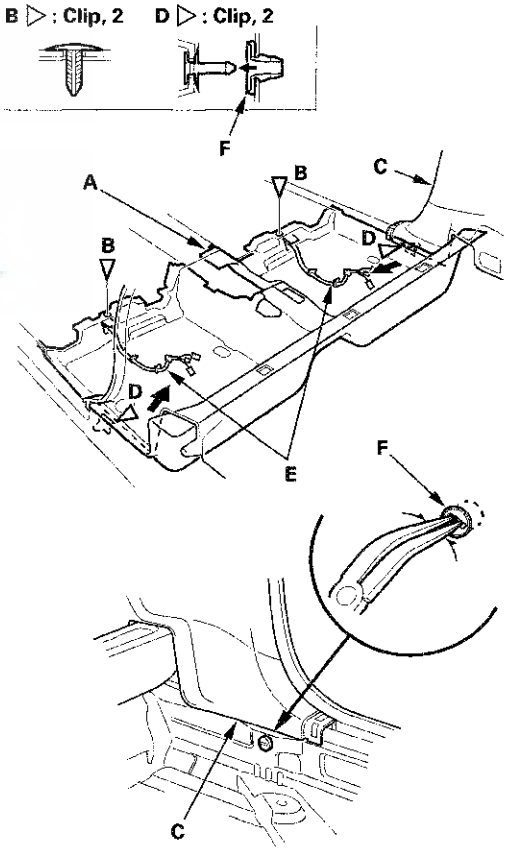

4-door

Fastener Locations

B ▷ : Clip, 2 D ▷ : Clip, 2

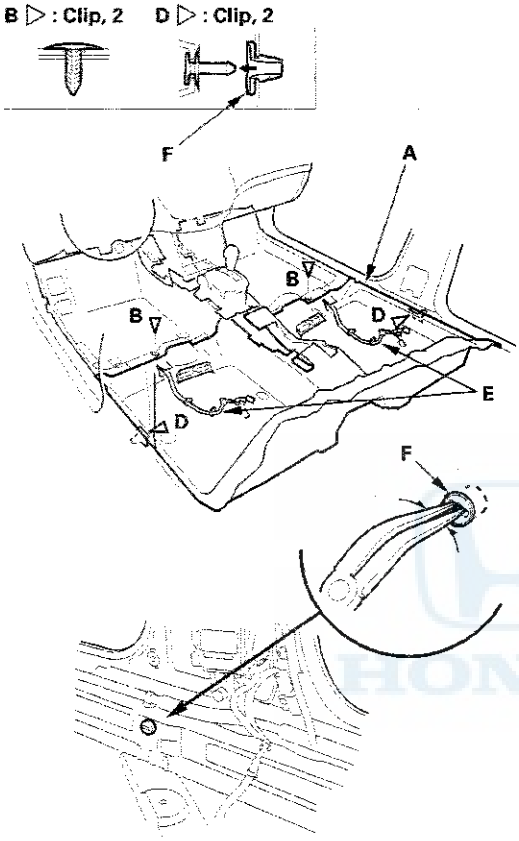

5. If necessary, remove the staples (A) by prying them with a flat-tip screwdriver, then remove the hook (B).

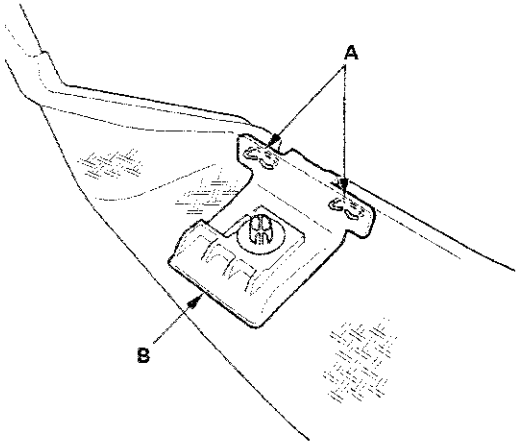

6. If the hook (A) is removed, reinstall the hook to the carpet (B) with new staples (C); fit the projection (D) of the hook to the notch in the carpet, then staple the hook. From face of the carpet, bend the projected staple with a flat-tip screwdriver.

Staple: Height 13 mm (0.51 in.)
Width 12 mm (0.47 in.)
Thickness 0.5 mm (0.02 in.)

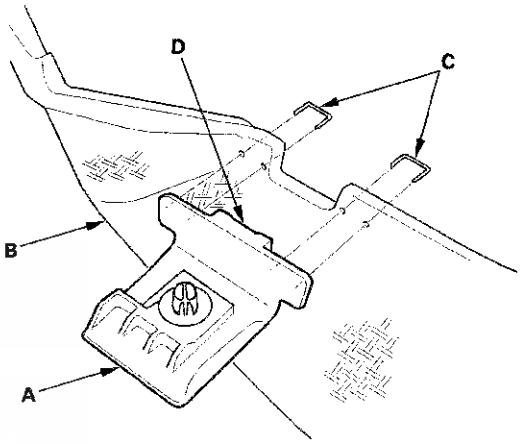

7. Install the carpet in the reverse order of removal, and note these items:

- Take care not to damage, wrinkle or twist the carpet.
- Make sure the seat harnesses are routed correctly.
- Slip the holes in the carpet over the rear heater ducts.
- If the clips fastening the carpet to the floor are damaged or stress-whitened, replace them with new ones.
- Replace the clips fastening the carpet to both door sill areas with new ones.
- Push the clips into place securely.
- 2-door: Slip the carpet under both rear side trim panels properly.
- Do the battery terminal reconnection procedure (see page 22-89).

Center Console Panel Removal/Installation

Special Tools Required
KTC trim tool set SOJATP2014 *
* Available through the Honda Tool and Equipment Program; call 888-424-6857

NOTE:
- Put on gloves to protect your hands.
- Take care not to scratch the front seat, the dashboard, and related parts.
- Use the appropriate tool from the KTC trim tool set to avoid damage when removing components.

1. M/T model: Lower the shift lever boot (A) to release the hooks (B) from the boot, then remove the shift knob (C).

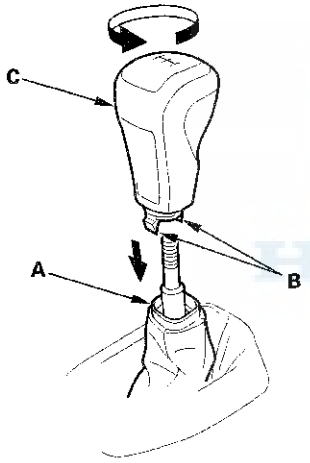

2. Remove the center console panel (A).

-1 Open the utility pocket lid (B), the front accessory power socket lid (C), and the console armrest.
-2 Hold the utility pocket lid and the front accessory power socket lid, and gently pull them up to detach the front clips (D).
-3 Detach the clips (E) and the hook (F) along the edge of the panel.
-4 Pry up on the rear corner edges of the console box trim (G) with the appropriate trim tool to detach the clips (H), and pull the panel up to detach the clip (I).
-5 Disconnect the front accessory power socket connector (J). With seat heater (for some models): Disconnect the driver's seat heater switch connector (K) and the front passenger's seat heater switch connector (L).
-6 M/T model with seat heater: Detach the harness clip (M) fastening the passenger's seat heater switch harness from the boot plate (N).

Fastener Locations

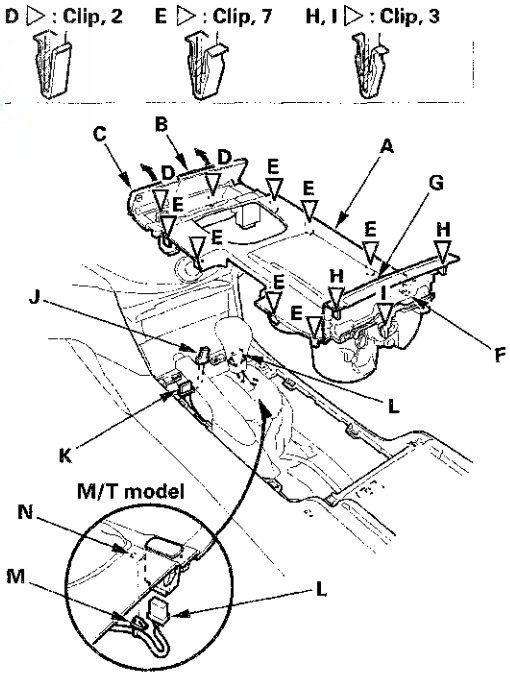

3. Remove the utility inner pocket (A) from the center console panel (B) by pulling it up to detach the hooks (C). Remove the screws, then remove the beverage holder (D) and the console box trim (E) from the panel.

Fastener Locations

▶ : Screw
A/T model, 9
M/T model, 13

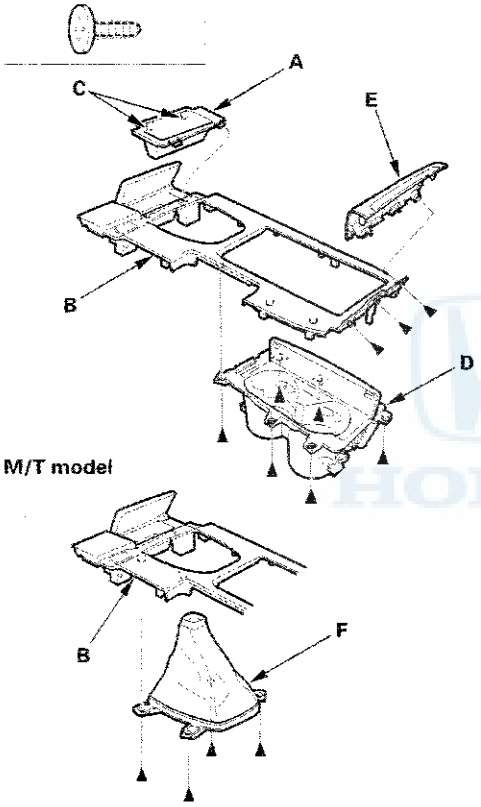

4. M/T model: Remove the screws, then remove the shift lever boot (F).

5. Install the console panel in the reverse order of removal, and note these items:

- Make sure each connector is plugged in properly.
- If the clips are damaged or stress-whitened, replace them with new ones.
- Push the clips and the hook into place securely.

Center Console Removal/Installation

NOTE:
- Put on gloves to protect your hands.
- Take care not to scratch the front seat, the dashboard, and related parts.

1. Remove these items:
   - Center console panel (see page 20-146)
   - Center console rear trim (see page 20-149)

2. If equipped, detach the harness clips (A) fastening the front seat heater switch harnesses (B) from the center console. M/T model with seat heater: Detach the harness clip from the driver's side only.

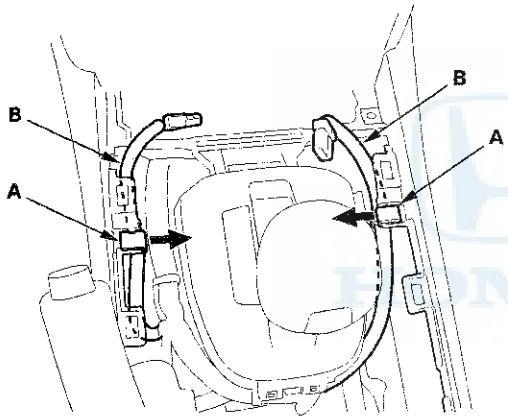

3. Disconnect the console accessory power socket connector (A) and the auxiliary jack assembly connector (B), and detach the harness clip (C).

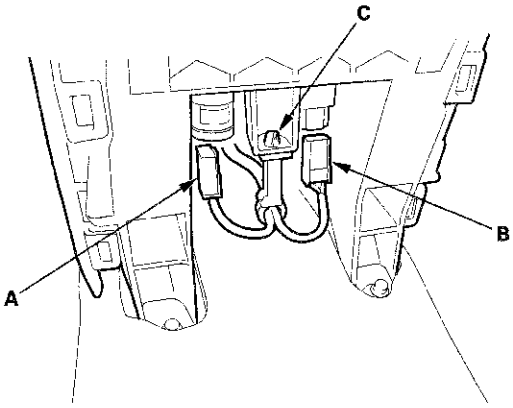

4. Remove the screws (A) and the bolts (B) securing the center console (C).

Fastener Locations

A ▶ : Screw, 2 B ▶ : Bolt, 4

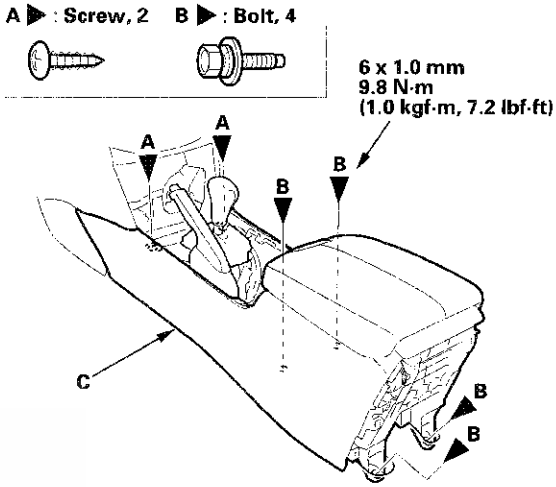

5. Detach the clips by pulling the front bottom edges of the center console (A) out from both sides, and pull up the console to release the hooks (B), then remove the console.

Fastener Locations

▷ : Clip, 2

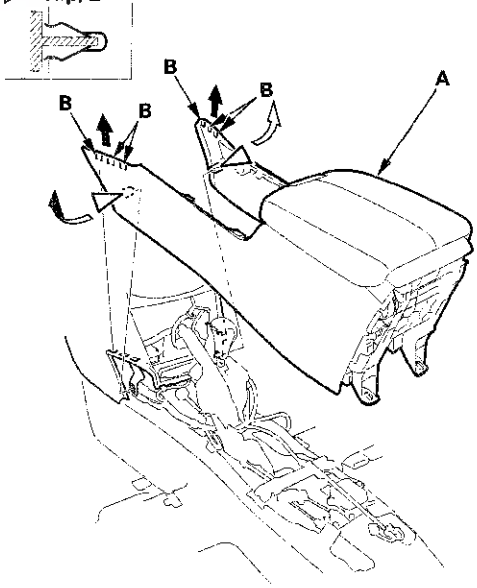

6. Install the console in the reverse order of removal, and note these items:

   - Make sure each connector is plugged in properly.
   - If the clips are damaged, replace them with new ones.
   - Push the clips and the hooks into place securely.

Center Console Rear Trim Removal/ Installation

Special Tools Required
KTC trim tool set SOJATP2014 *
* Available through the Honda Tool and Equipment Program; call 888-424-6857

NOTE:
- Take care not to scratch the center console and the related parts.
- Use the appropriate tool from the KTC trim tool set to avoid damage when removing components.

1. Gently pull out the console rear trim (A) to detach the clips, then remove the trim.

Fastener Locations
▷ : **Clip, 6**

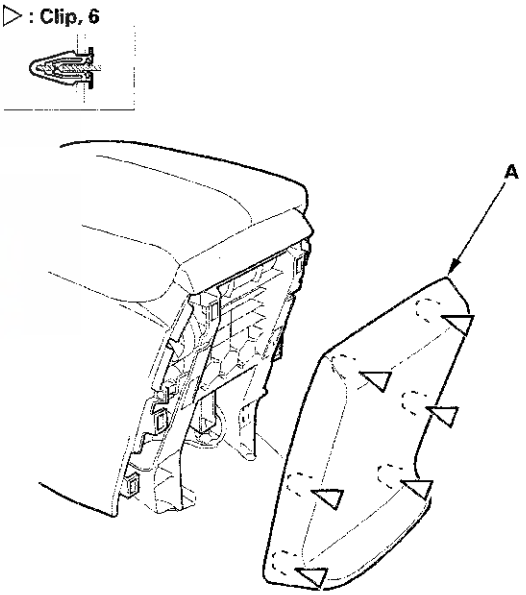

2. Install the trim in the reverse order of removal, and note these items:

   - If the clips are damaged or stress-whitened, replace them with new ones.
   - Push the clips into place securely.

Center Console Armrest Replacement

Special Tools Required
KTC trim tool set SOJATP2014 *
* Available through the Honda Tool and Equipment Program; call 888-424-6857

NOTE:
- Take care not to scratch the console.
- Use the appropriate tool from the KTC trim tool set to avoid damage when removing components.

1. Remove the center console (see page 20-148).

2. Remove the screws securing the driver's side panel (A) and the passenger's side panel (B) from the console box (C), and slide the driver's side panel and the passenger's side panel forward to release the ribs (D) of the panels from the hooks (E) of the box, then remove the panels.

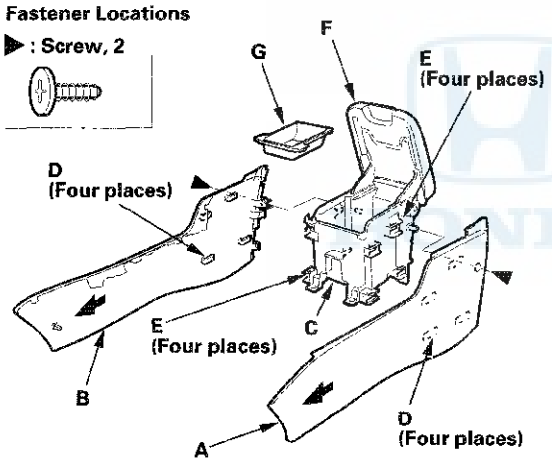

3. For some models: Open the console armrest (F), and remove the box tray (G) by pulling it up.

4. Remove the screws, then remove the left box rail (A) and the right box rail (B) by pulling them up from the console box (C).

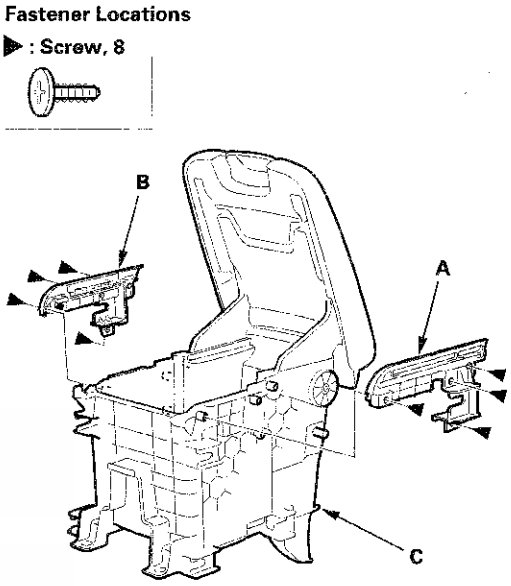

5. Remove the E-clips (A) and the hinge pin (B) from the console armrest (C) and the console box (D).

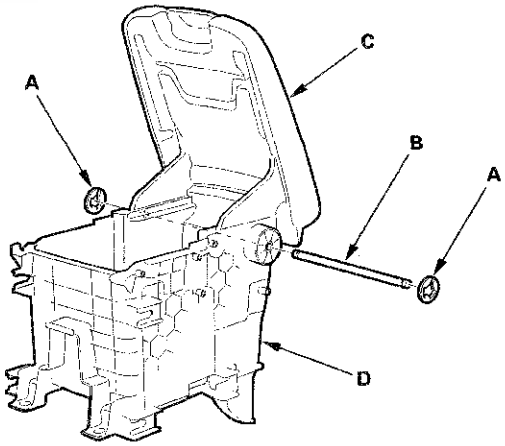

6. From both rear sides of the console box (A), release the opening springs (B) from the bosses (C) of the box, and close the console armrest (D). This rotates the opening springs into the notches (E) on the box.

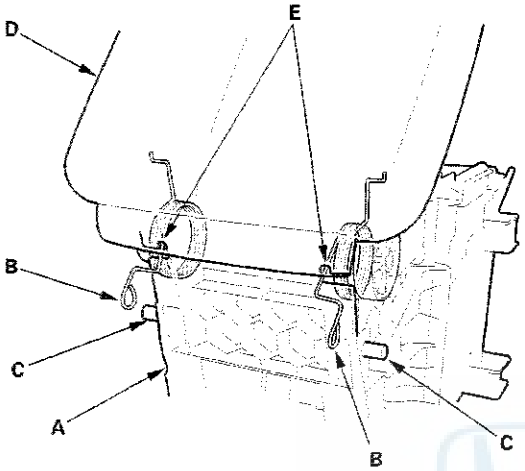

7. Open the console armrest (A). While passing the gear portions (B) of both sides through the notches (C) in the console box (D) and releasing the ends of the opening springs (E) from the notches (F), slide the armrest rearward, then remove it. Remove the opening springs from the box.

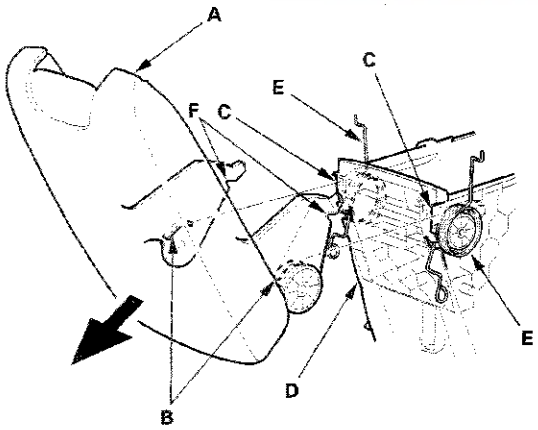

8. Install the armrest in the reverse order of removal, and note these items:

- Replace the E-clips with new ones.
- Make sure the ribs of the driver's side panel and the passenger's side panel are engaged to the hooks of the console box securely.

Instrument Visor Removal/Installation

Special Tools Required
KTC trim tool set SOJATP2014 *
* Available through the Honda Tool and Equipment Program; call 888-424-6857

NOTE:
- Take care not to scratch the dashboard and its related parts.
- Use the appropriate tool from the KTC trim tool set to avoid damage when removing components.

1. Detach the clips fastening the column blind cover (A) from the upper column cover (B) by hand.

Fastener Locations
▷ : Clip, 2

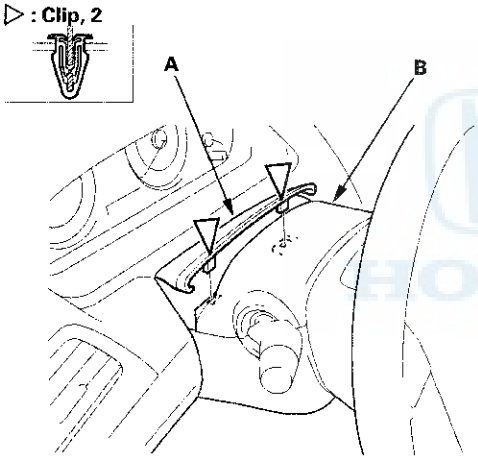

2. If necessary, detach the hooks (A), then remove the column blind cover (B) from the instrument visor (C).

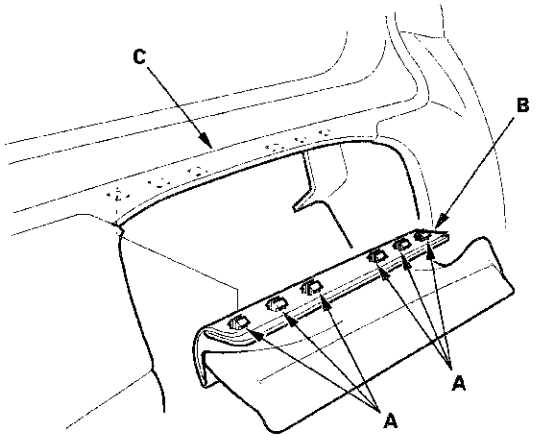

3. Gently pull out along the edge of the instrument visor (A) to detach the clips (B, C) and the hooks (D), and release the hooks (E) by pulling the visor out, then remove the visor.

Fastener Locations
B ▷ : Clip, 2 C ▷ : Clip, 4

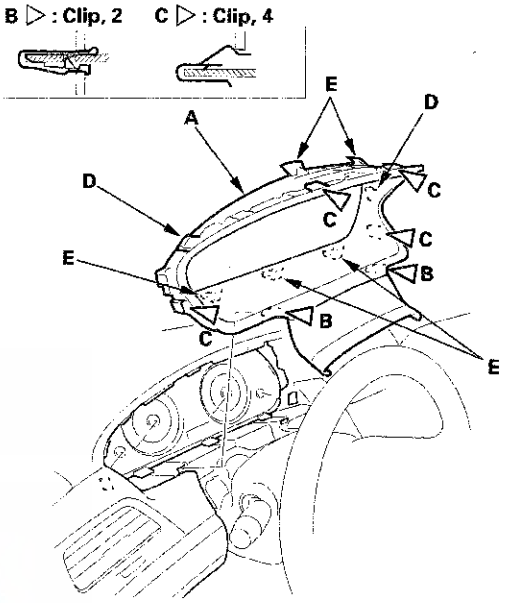

4. Install the visor in the reverse order of removal, and note these items:

- If the clips are damaged or stress-whitened, replace them with new ones.
- Push the clips and the hooks into place securely.

Driver's Dashboard Lower Cover Removal/Installation

Special Tools Required
KTC trim tool set SOJATP2014 *
* Available through the Honda Tool and Equipment Program; call 888-424-6857

NOTE:
- Take care not to scratch the dashboard and its related parts.
- Use the appropriate tool from the KTC trim tool set to avoid damage when removing components.

1. Adjust the steering column upward.

2. Remove the driver's dashboard lower cover (A).

   -1 Pull out the bottom of the cover to detach the clips (B).
   -2 Pull out along the edge of the cover to detach the clips (C).
   -3 Release the bottom hooks (D).
   -4 Disconnect the VSA OFF switch connector (E).

Fastener Locations
B, C ▷ : Clip, 8

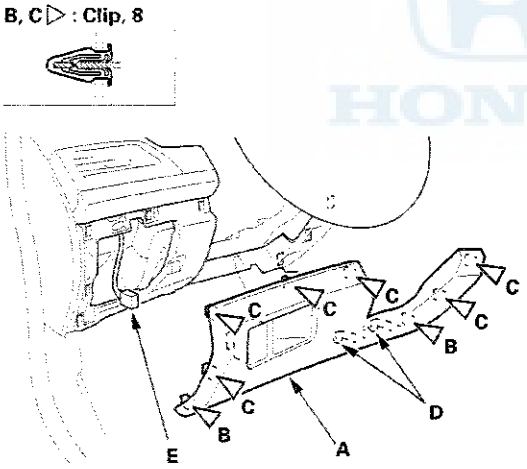

3. If necessary, remove the screws, and detach the hooks (A), then remove the pocket trim (B) from the driver's dashboard lower cover (C).

Fastener Locations
▶ : Screw, 3

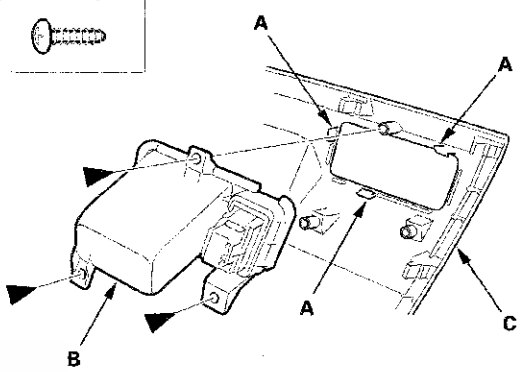

4. Install the cover in the reverse order of removal, and note these items:

   - Make sure the VSA OFF switch connector is plugged in properly.
   - If the clips are damaged or stress-whitened, replace them with new ones.
   - If the bottom hooks are damaged or stress-whitened, replace the cover with a new one.
   - Push the clips and the hooks into place securely.

Driver's Outer Dashboard Trim Removal/Installation

Special Tools Required
KTC trim tool set SOJATP2014 *
* Available through the Honda Tool and Equipment Program; call 888-424-6857

NOTE:
- Take care not to scratch the dashboard and its related parts.
- Use the appropriate tool from the KTC trim tool set to avoid damage when removing components.

1. Remove the driver's outer dashboard trim (A).
   - 1 Using the appropriate trim tool, pry up on the edge of the trim at the steering column side.
   - 2 Detach the clips.

Fastener Locations
▷ : **Clip, 3**

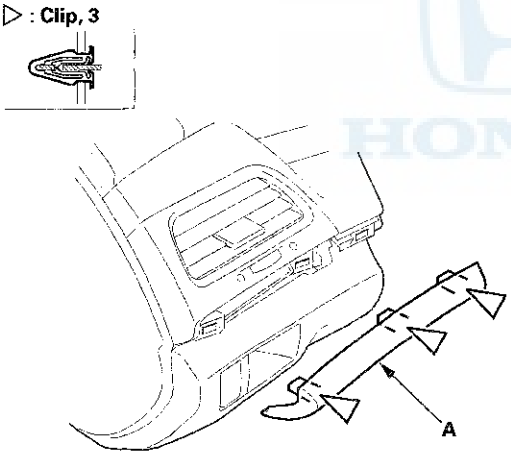

2. Install the trim in the reverse order of removal, and note these items:
   - If the clips are damaged or stress-whitened, replace them with new ones.
   - Push the clips into place securely.

Driver's Inner Dashboard Trim Removal/Installation

Special Tools Required
KTC trim tool set SOJATP2014 *
* Available through the Honda Tool and Equipment Program; call 888-424-6857

NOTE:
- Take care not to scratch the dashboard and its related parts.
- Use the appropriate tool from the KTC trim tool set to avoid damage when removing components.

1. Remove the driver's inner dashboard trim (A).
   - 1 Using the appropriate trim tool, pry up on the edge of the trim at the steering column side.
   - 2 Detach the clips.
   - 3 Release the hook (B) from under the center panel (C).

Fastener Locations
▷ : **Clip, 2**

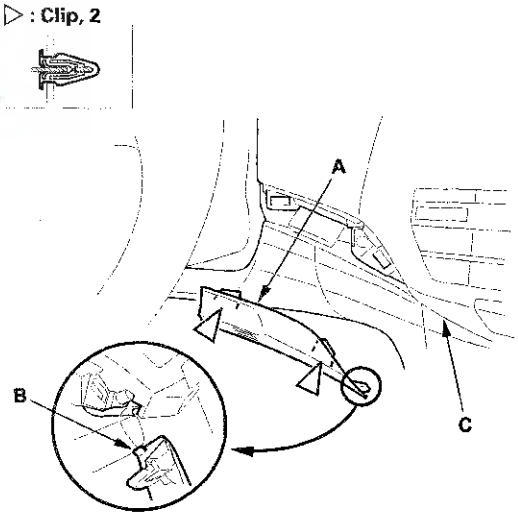

2. Install the trim in the reverse order of removal, and note these items:
   - If the clips are damaged or stress-whitened, replace them with new ones.
   - First insert the hook under the center panel, then push the clips into place securely.

Center Pocket Removal/Installation

Without Navigation System

NOTE: Take care not to scratch the dashboard and its related parts.

1. Remove the center console panel (see page 20-146).

2. A/T model: Move the shift lever to 1st.
   M/T model: Move the shift lever to R.

3. Apply protective tapes (A) to the entire pocket lid face and the front portion of the A/T gear position indicator panel (B) (A/T model).

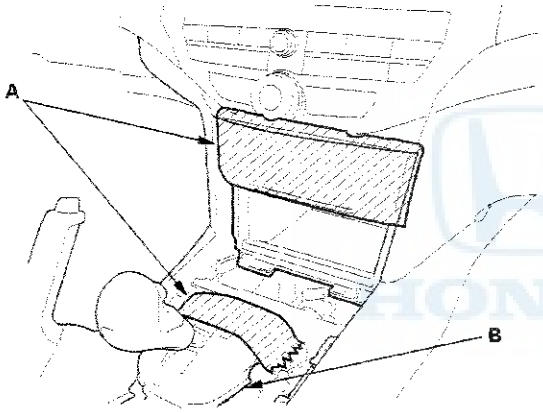

4. Open the lid, and remove the bolts securing the center pocket (A).

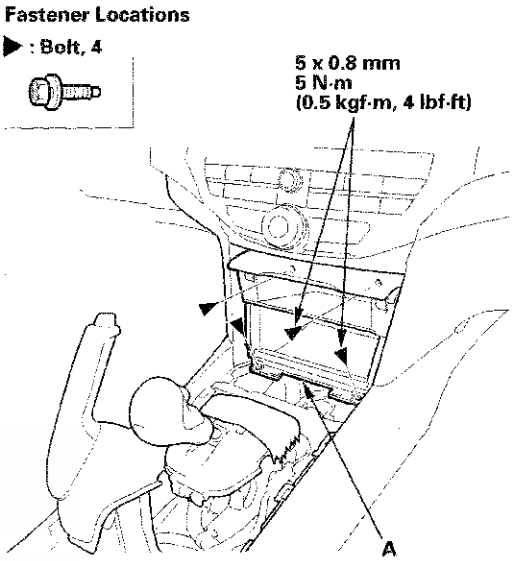

5. Pull the center pocket (A) out, then remove it. Take care not to scratch the shift lever knob and the A/T gear position indicator panel (A/T model).

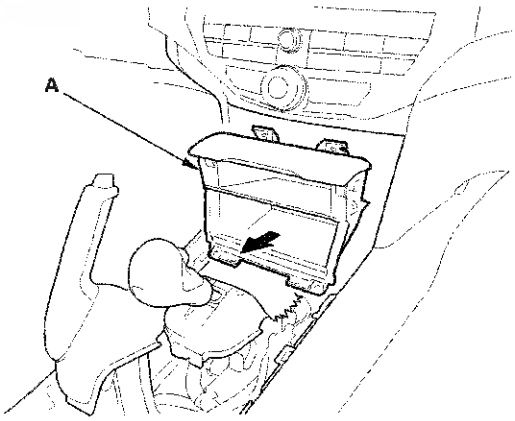

6. Install the pocket in the reverse order of removal.

Center Pocket Removal/Installation (cont'd)

With Navigation System

NOTE: Take care not to scratch the dashboard and its related parts.

1. Remove the center console panel (see page 20-146).
2. A/T model: Move the shift lever to 1st.
   M/T model: Move the shift lever to R.
3. Open the lid, and remove the bolts securing the center pocket (A).

Fastener Locations

▶ : Bolt, 4

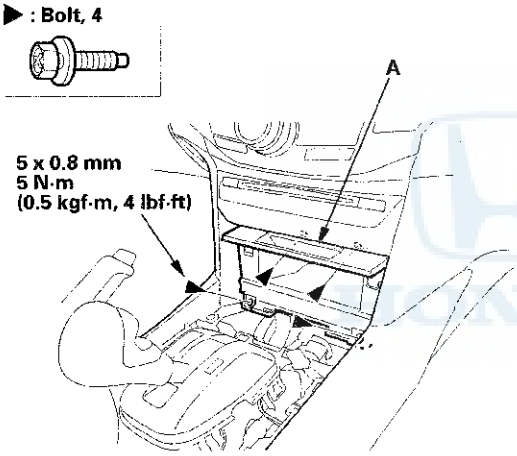

4. Pull the center pocket (A) out, then remove it. Take care not to scratch the shift lever knob and the A/T gear position indicator panel (A/T model).

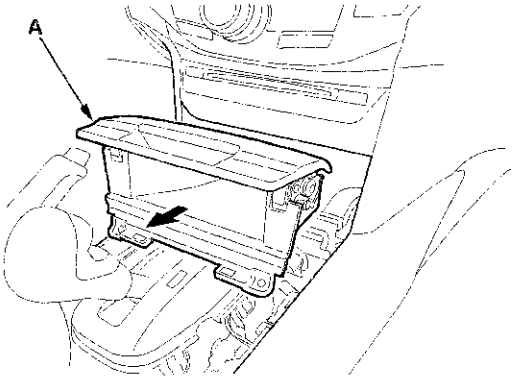

5. Install the pocket in the reverse order of removal.

Dashboard Center Lower Cover Removal/Installation

Special Tools Required
KTC trim tool set SOJATP2014 *
* Available through the Honda Tool and Equipment Program; call 888-424-6857

SRS components are located in this area. Review the SRS component locations, 2-door (see page 24-21), 4-door (see page 24-19) and the precautions and procedures (see page 24-23) before doing repairs or service.

NOTE:
- Take care not to scratch the dashboard and its related parts.
- Use the appropriate tool from the KTC trim tool set to avoid damage when removing components.

1. Remove the center console panel (see page 20-146).

2. Release both front portions of the center console (A) from the dashboard.

   -1 Remove the screws.
   -2 Detach the clips by pulling the front bottom edges of the console out from both sides.
   -3 Gently pull up both front portions of the console to release the hooks (B) from the dashboard.

Fastener Locations
▶ : Screw, 2 ▷ : Clip, 2

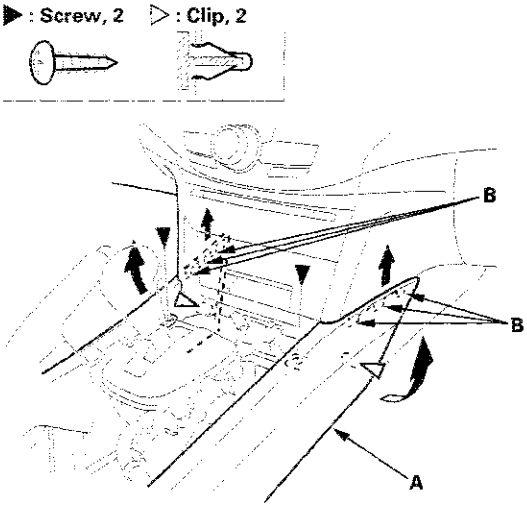

3. Remove the driver's dashboard center lower cover (A).

   -1 Remove the clip (B).
   -2 Gently pull the rear upper edge of the cover to detach the clip (C).
   -3 Pull up the rear portion of the cover to release the hook (D) from the rear heater duct (E).
   -4 Pull the cover rearward to release the hook (F) from the heater unit (G).

Fastener Locations
B ▷ : Clip, 1 C ▷ : Clip, 1

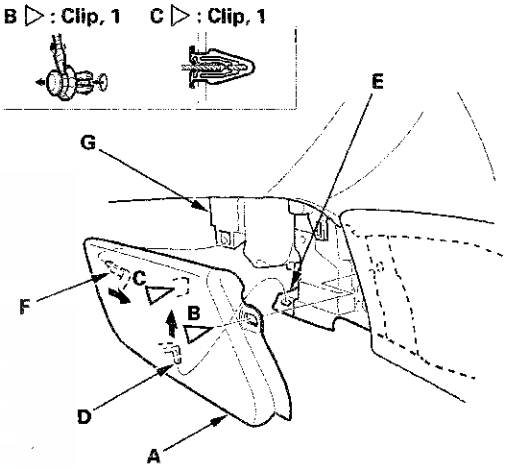

(cont'd)

Dashboard Center Lower Cover Removal/Installation (cont'd)

4. Remove the passenger's dashboard center lower cover (A).

   -1 Remove the clip (B).
   -2 Gently pull the front upper edge of the cover to detach the clip (C).
   -3 Pull up the cover to release the hook (D) from the rear heater duct (E).

Fastener Locations

B ▷ : Clip, 1 C ▷ : Clip, 1

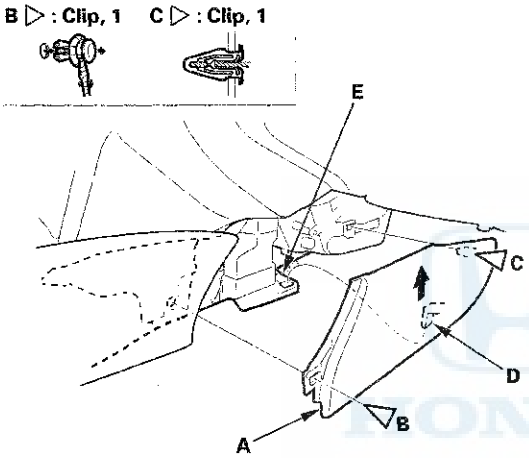

5. Install the cover in the reverse order of removal, and note these items:

   - If the clips are damaged or stress-whitened, replace them with new ones.
   - Push the clips into place securely.
   - Make sure the hooks are set properly.

Center Display Visor Removal/ Installation

Special Tools Required
KTC trim tool set SOJATP2014 *
* Available through the Honda Tool and Equipment Program; call 888-424-6857

Without Navigation System

NOTE:
- Take care not to scratch the dashboard and its related parts.
- Use the appropriate tool from the KTC trim tool set to avoid damage when removing components.

1. Remove these items:

   - Center pocket (see page 20-155)
   - Driver's inner dashboard trim (see page 20-154)
   - Passenger's dashboard trim (see page 20-160)
   - Audio-HVAC module (see page 23-111)

2. Remove the center display visor (A).

   -1 Remove the screws.
   -2 Pull out the visor to detach the clips.

Fastener Locations

▶ : Screw, 2 ▷ : Clip, 6

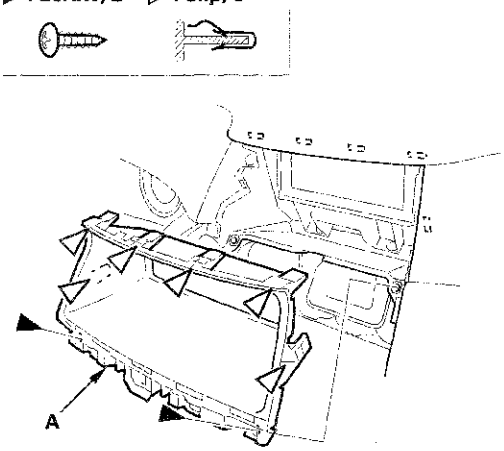

3. Install the visor in the reverse order of removal, and note these items:

   - If the clips are damaged, replace them with new ones.
   - Push the clips into place securely.

Special Tools Required
KTC trim tool set SOJATP2014 *
* Available through the Honda Tool and Equipment Program; call 888-424-6857

With Navigation System

NOTE:
- Take care not to scratch the dashboard and its related parts.
- Use the appropriate tool from the KTC trim tool set to avoid damage when removing components.

1. Remove the dashboard center vent (see page 20-164)

2. Remove the center display visor (A).

   -1 Remove the screws (B).
   -2 Pull out the upper edge of the visor to detach the upper clips (C).
   -3 Pull out the visor to detach the side clips (D).

   NOTE: If the non-woven fabric (E) on the upper clips is damaged, replace it.

Fastener Locations
B ▶ : Screw, 2 C, D ▷ : Clip, 6

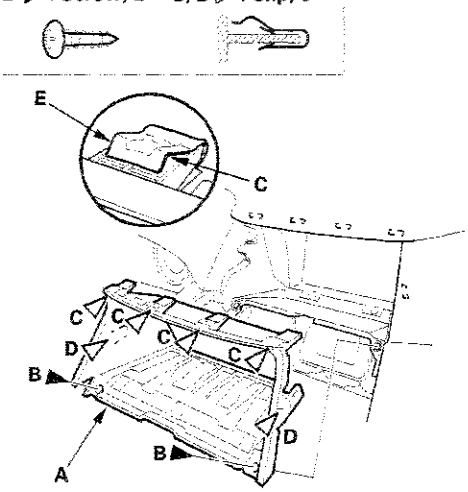

3. Install the cover in the reverse order of removal, and note these items:

   - If the clips are damaged, replace them with new ones.
   - If the upper clip is replaced, attach the new non-woven fabric (A) around new clip (B) as the following procedures.
     – After installing new clip to the visor (C), clean the clip and the visor surfaces with a shop towel dampened in isopropyl alcohol. After cleaning, keep oil, grease, and water from getting on the surface.
     – Attach the non-woven fabric with adhesive tape around the clip.
   - Push the clips into place securely.

Non-woven fabric:
Thickness 0.5 mm (0.02 in.)
Width 20 mm (0.79 in.)
Length 25 mm (0.98 in.)

Non-woven fabric adhesive tape:
Thickness 0.16 mm (0.006 in.)
Width 20 mm (0.79 in.)
Length 25 mm (0.98 in.)

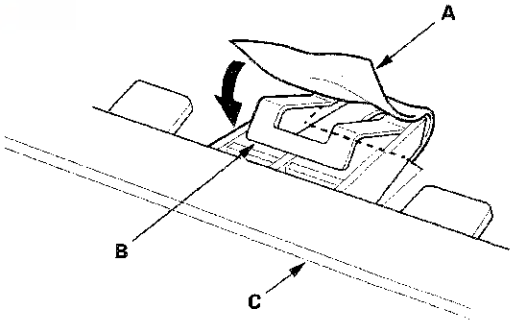

Passenger's Dashboard Trim Removal/Installation

Special Tools Required
KTC trim tool set SOJATP2014 *
* Available through the Honda Tool and Equipment Program; call 888-424-6857

NOTE:
- Take care not to scratch the dashboard and its related parts.
- Use the appropriate tool from the KTC trim tool set to avoid damage when removing components.

1. Remove the passenger's dashboard trim (A).

   -1 Open the glove box.
   -2 Pull out on the outside bottom edge of the trim by hand.
   -3 Detach the clips along the trim.
   -4 Release the hook (B) from under the center panel (C).

Fastener Locations

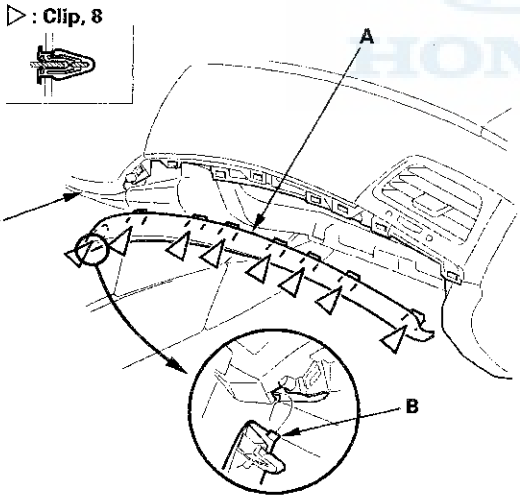

2. Install the trim in the reverse order of removal, and note these items:

   - If the clips are damaged or stress-whitened, replace them with new ones.
   - First insert the hook under the center panel, then push the clips into place securely.

Glove Box Lock Cylinder Replacement

NOTE: Take care not to scratch the glove box.

1. Remove the glove box (see page 20-161).

2. Lift the glove box handle (A), and use a hook-shaped tool to pull one end of the retainer (B) out of its slot.

   NOTE: Do not remove the retainer entirely. Leave one end of the retainer in its original position when removing the lock cylinder.

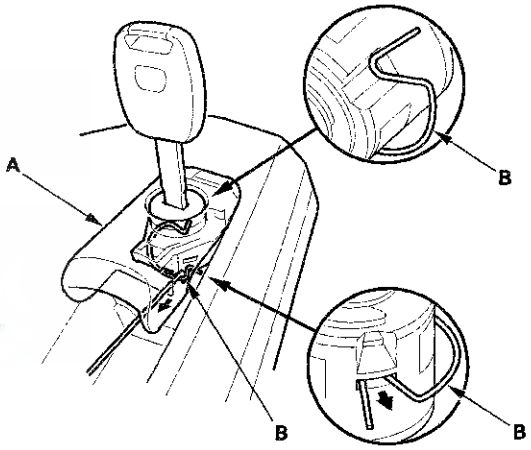

3. Remove the glove box lock cylinder (A).

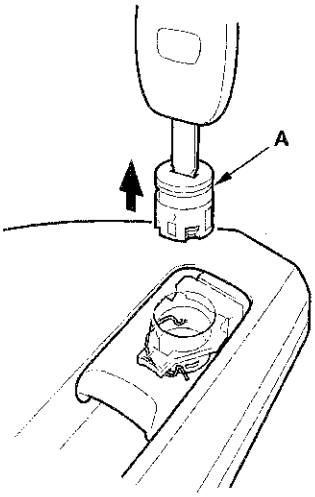

4. Reinstall the end of the retainer (A) in its slot, then reinstall the lock cylinder (B). Push the cylinder into place securely until the retainer snaps into place.

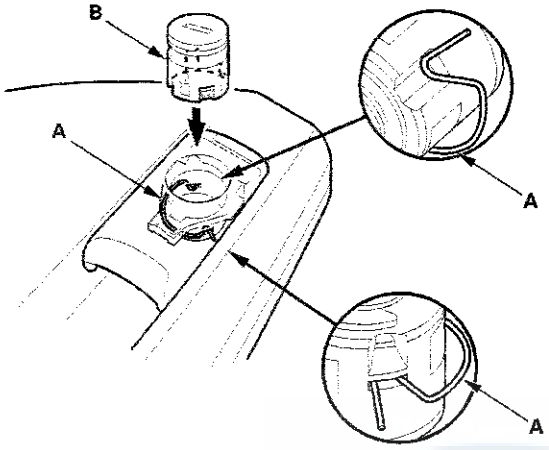

Glove Box Removal/Installation

SRS components are located in this area. Review the SRS component locations, 2-door (see page 24-21), 4-door (see page 24-19) and the precautions and procedures (see page 24-23) before doing repairs or service.

NOTE: Take care not to scratch the dashboard and its related parts.

1. Open the glove box.
2. Disconnect the glove box damper (A) from the pivot (B) on the glove box.

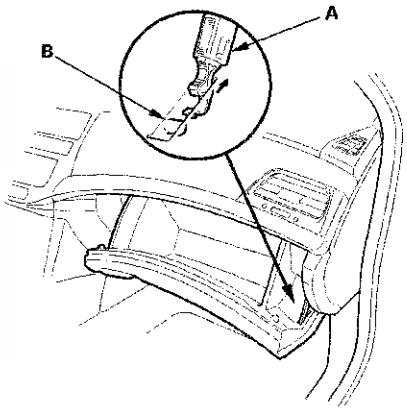

3. Close the glove box.
4. Remove the bolts.

Fastener Locations

▶ : Bolt, 2

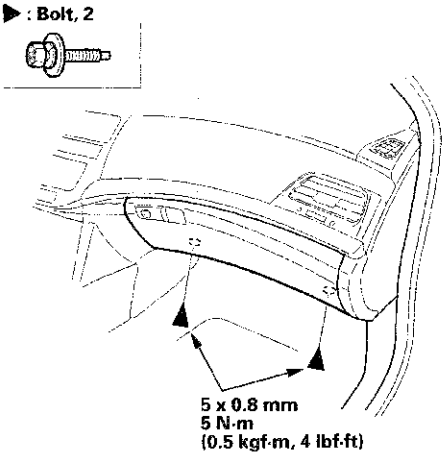

(cont'd)

Glove Box Removal/Installation (cont'd)

5. While holding the glove box (A), release the glove box stop (B) on each side from the dashboard by pushing them in, then remove the glove box.

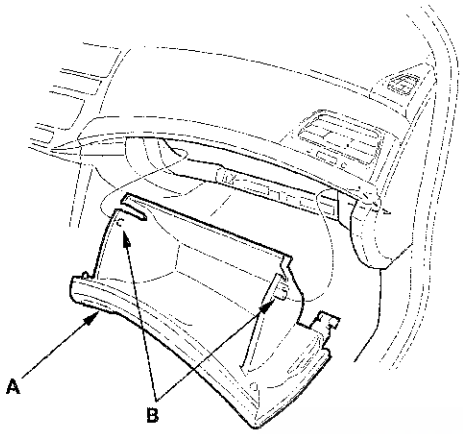

6. Open the front door, and remove the passenger's dashboard side lid (A).

   -1 Pull out the front door opening seal (B) as needed.
   -2 Gently pry the rear edge of the lid with the appropriate trim tool to detach the clips and the hooks (C).
   -3 Release the hooks (D).

Fastener Locations

▷ : **Clip, 3**

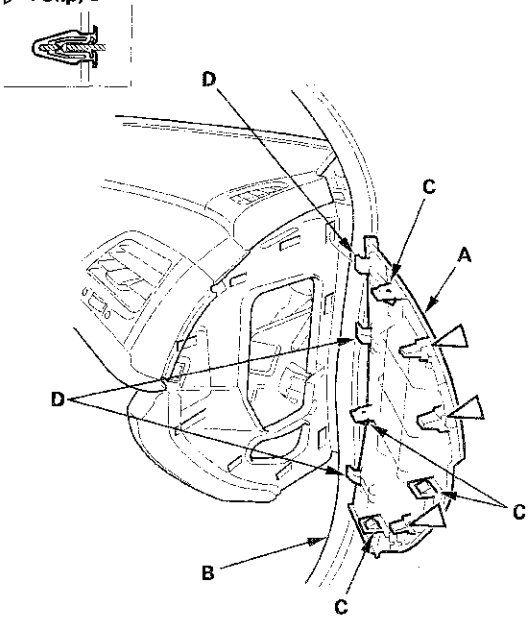

7. From the dashboard side lid opening, detach the clip (A), then remove the glove box damper (B).

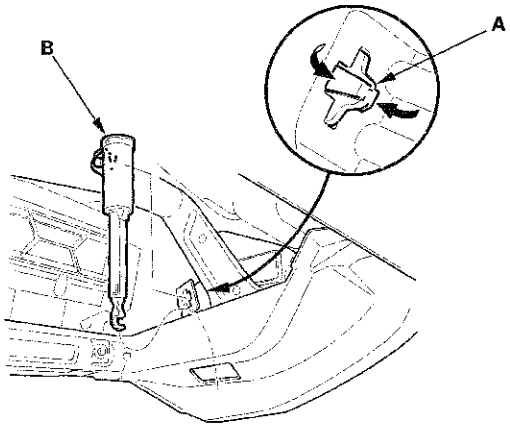

8. Install the glove box in the reverse order of removal, and note these items:

   - If the dashboard side lid clips are damaged or stress-whitened, replace them with new ones.
   - Push the clips and the hooks into place securely.

Glove Box Striker Replacement

SRS components are located in this area. Review the SRS component locations, 2-door (see page 24-21), 4-door (see page 24-19) and the precautions and procedures (see page 24-23) before doing repairs or service.

NOTE: Take care not to scratch the dashboard and its related parts.

1. Disconnect the glove box damper from the pivot on the glove box (see page 20-161).

2. While holding the glove box, release the glove box stop on each side from the dashboard by pushing them inside (see step 5 on page 20-162).

3. Remove the screws, then remove the glove box striker (A).

Fastener Locations

▶ : Screw, 2

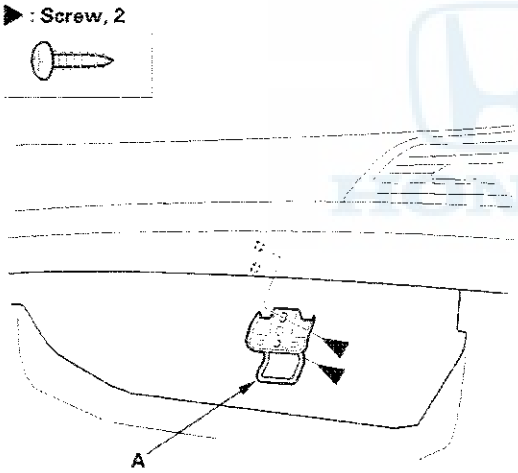

4. Install the striker in the reverse order of removal.

Dashboard Side Vent Removal/ Installation

Special Tools Required
KTC trim tool set SOJATP2014 *
* Available through the Honda Tool and Equipment Program; call 888-424-6857

NOTE:
- Take care not to scratch the dashboard and its related parts.
- Use the appropriate tool from the KTC trim tool set to avoid damage when removing components.
- The driver's side vent is shown; the passenger's side vent is similar.

1. Remove these items:
   - Driver's side: Driver's outer dashboard trim (see page 20-154)
   - Passenger's side: Passenger's dashboard trim (see page 20-160)
   - Passenger's side: Passenger's dashboard side lid (see step 6 on page 20-162)

2. Driver's side: Open the front door, and remove the driver's dashboard side lid (A).
   1. Pull out the front door opening seal (B) as needed.
   2. Gently pry the rear edge of the lid with the appropriate trim tool to detach the clips and the hooks (C).
   3. Release the hooks (D).

Fastener Locations

▷ : Clip, 3

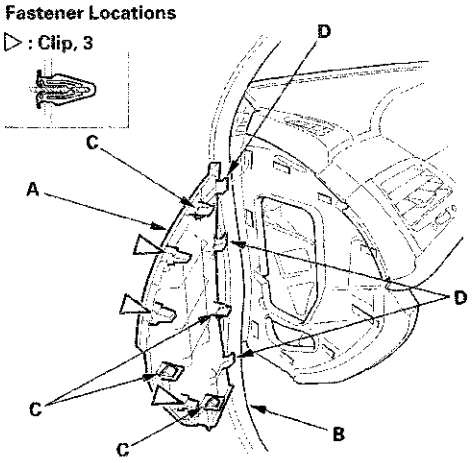

(cont'd)

Dashboard Side Vent Removal/ Installation (cont'd)

3. Remove the screw (A).

Fastener Locations

A ▶ : Screw, 1 C ▷ : Clip, 3

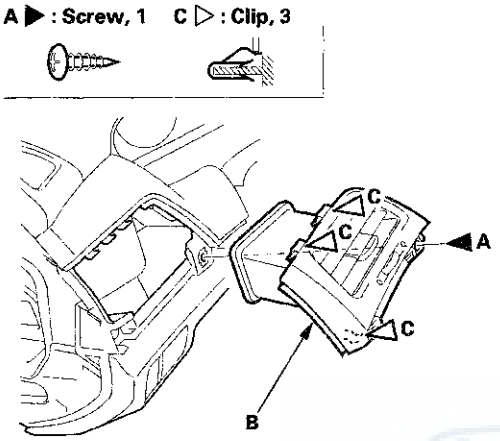

4. Pull out the side vent (B) to release the clips (C), then remove the vent.

5. Install the side vent in the reverse order of removal, and push the clips into place securely.

Dashboard Center Vent Removal/ Installation

Special Tools Required

KTC trim tool set SOJATP2014 *

* Available through the Honda Tool and Equipment Program; call 888-424-6857

With Navigation System

NOTE:

- Take care not to scratch the dashboard and its related parts.
- Use the appropriate tool from the KTC trim tool set to avoid damage when removing components.

1. Apply protective tape (A) to the dashboard middle pad beside both side edges of the dashboard center vent (B). Pry up on the edge of the center vent with the appropriate trim tool to detach the clips (C, D).

Fastener Locations

C ▷ : Clip, 2 D ▷ : Clip, 2

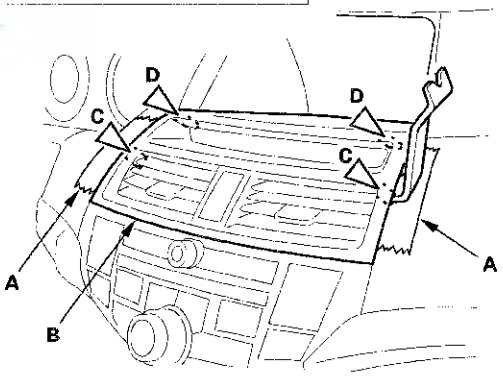

2. Pull out the dashboard center vent (A) by hand to detach lower clips and release the projections (B) from the holes in the center display visor (C), then remove the panel.

Fastener Locations

▷: **Clip, 4**

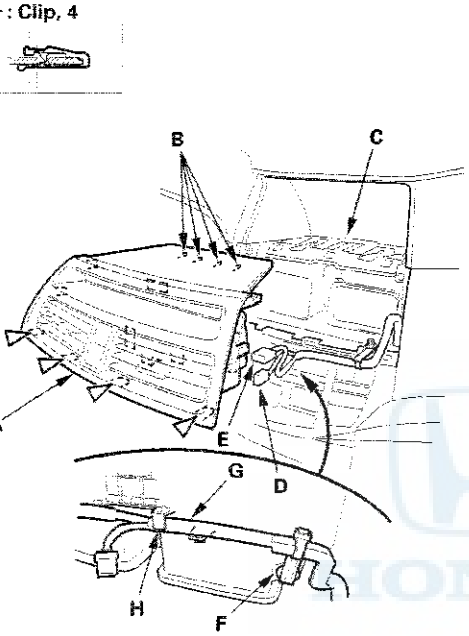

3. Disconnect the hazard warning switch/passenger's airbag cutoff indicator connector (D) and the navigation subdisplay connector (E). Detach the harness clip (F), and release the wire harness (G) from the harness holder (H).

4. Install the vent in the reverse order of removal, and note these items:

   - If the clips are damaged or stress-whitened, replace them with new ones.
   - Make sure all connectors are plugged in properly.
   - Push the harness clip and the clips into place securely.

Side Defogger Vent Trim Removal/ Installation

Special Tools Required

KTC trim tool set SOJATP2014 *

* Available through the Honda Tool and Equipment Program; call 888-424-6857

Driver's Side

NOTE:

- Take care not to scratch the dashboard and its related parts.
- Use the appropriate tool from the KTC trim tool set to avoid damage when removing components.

1. Insert the appropriate trim tool into a gap between the side defogger vent trim (A) and the driver's outer middle pad (B), and detach the lower clips (C).

Fastener Locations

C, D ▷: Clip, 3

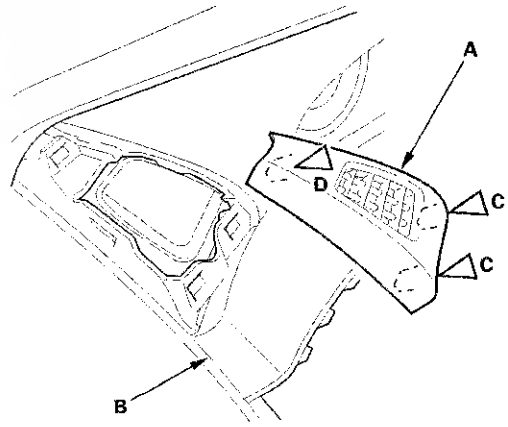

2. Pull out the trim to detach the upper clip (D), then remove the trim.

3. Install the trim in the reverse order of removal, and note these items:

   - If the clips are damaged or stress-whitened, replace them with new ones.
   - Push the clips into place securely.

Driver's Outer Middle Pad Removal/ Installation

Special Tools Required
KTC trim tool set SOJATP2014 *
* Available through the Honda Tool and Equipment Program; call 888-424-6857

NOTE:
- Take care not to scratch the dashboard and its related parts.
- Use the appropriate tool from the KTC trim tool set to avoid damage when removing components.

1. Remove the driver's dashboard side vent (see page 20-163).

2. Gently pull out along the edge of the driver's outer middle pad (A) to detach the hooks (B), then remove the pad.

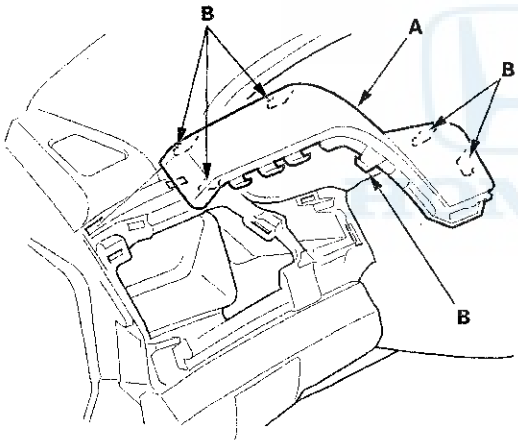

3. Install the pad in the reverse order of removal, and push the hooks into place securely.

Driver's Inner Middle Pad Removal/ Installation

Special Tools Required
KTC trim tool set SOJATP2014 *
* Available through the Honda Tool and Equipment Program; call 888-424-6857

NOTE:
- Take care not to scratch the dashboard and its related parts.
- Use the appropriate tool from the KTC trim tool set to avoid damage when removing components.

1. Remove these items:

   - Center pocket:
     – Without navigation system (see page 20-155)
     – With navigation system (see page 20-156)
   - Driver's inner dashboard trim (see page 20-154)
   - Passenger's dashboard trim (see page 20-160)
   - Dashboard center vent (with navigation system) (see page 20-164)
   - Audio-HVAC module:
     – Without navigation system (see page 23-111)
     – With navigation system (see page 23-110)

2. Gently pull out along the edge of the driver's inner middle pad (A) to detach the hooks (B), then remove the pad.

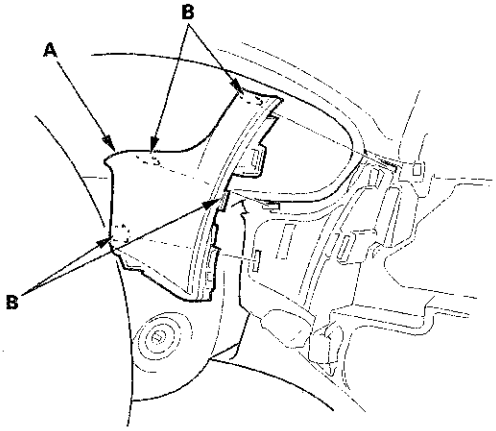

3. Install the pad in the reverse order of removal, and push the hooks into place securely.

Passenger's Middle Pad Removal/Installation

Special Tools Required
KTC trim tool set SOJATP2014 *
* Available through the Honda Tool and Equipment Program; call 888-424-6857

SRS components are located in this area. Review the SRS component locations, 2-door (see page 24-21), 4-door (see page 24-19) and the precautions and procedures (see page 24-23) before doing repairs or service.

NOTE:
- Take care not to scratch the dashboard, and its related parts.
- Use the appropriate tool from the KTC trim tool set to avoid damage when removing components.

1. Do the battery terminal disconnection procedure (see page 22-89), then wait at least 3 minutes before beginning work.

2. Remove these items:

   - Center pocket:
     - Without navigation system (see page 20-155)
     - With navigation system (see page 20-156)
   - Passenger's dashboard trim (see page 20-160)
   - Dashboard center vent (with navigation system) (see page 20-164)
   - Audio-HVAC module:
     - Without navigation system (see page 23-111)
     - With navigation system (see page 23-110)
   - Passenger's dashboard side vent (see page 20-163)
   - Passenger's airbag (see page 24-206)

3. Gently pull out along the edge of the passenger's middle pad (A) to detach the hooks (B), then remove the pad.

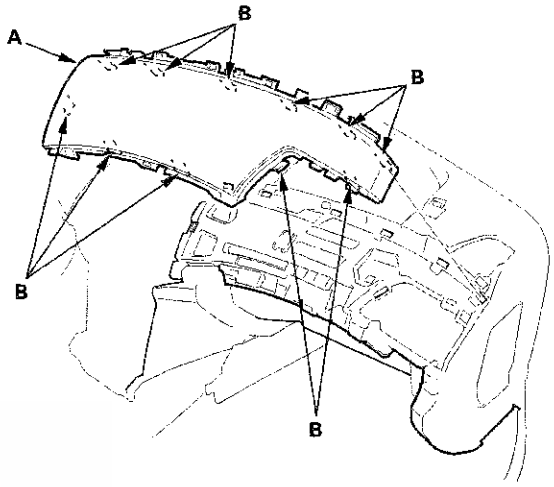

4. Install the pad in the reverse order of removal, and note these items:

   - Push the hooks into place securely.
   - Do the battery terminal reconnection procedure (see page 22-89).
   - Check for any DTCs that may have been set during repairs, and clear them.

Column Cover Removal/Installation

NOTE:
- Put on gloves to protect your hands.
- Take care not to scratch or damage the column covers.
- Do not pry the cover surface with any tools.

1. Adjust the steering column so that it is fully tilted down and fully pulled out.

2. Remove the column blind cover by detaching the clips from the upper column cover (see step 1 on page 20-152).

3. Turn the steering wheel to the left, and release the left tab (A) of the upper column cover (B) while pushing the lower column cover (C) from the front side.

   NOTICE
   Carefully release the tabs, and note the hooks (D) may break when the upper column cover is pulled up too hard.

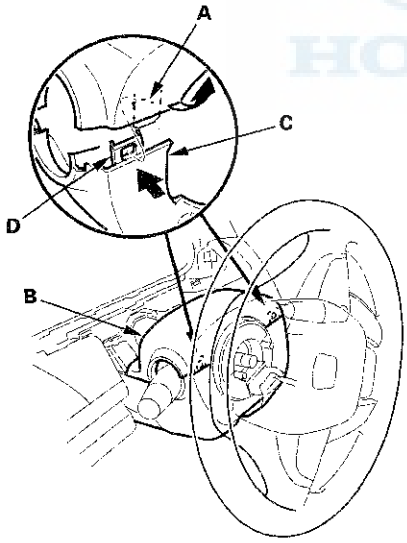

4. Turn the steering wheel to the right, and release the right tab of the upper column cover the same way as in step 3.

5. Insert a suitable sized screwdriver or equivalent tool (A) along the guide rib (B) into the lever hole (C) in the lower column cover (D).

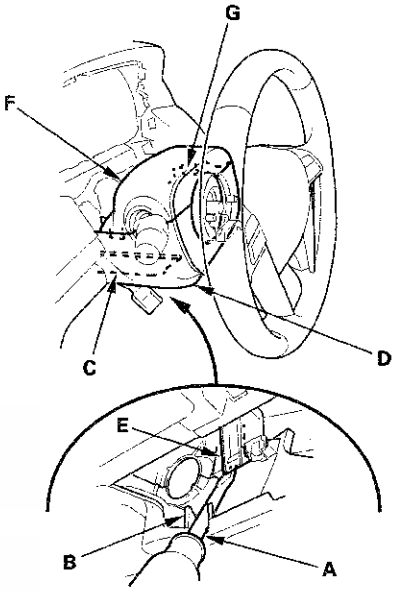

6. Release the hook (E) locating on the left side of the upper column cover (F). The right side hook (G) of the upper column cover can't be released from the inside.

7. Remove the upper column cover (A) by lightly pulling it up while releasing the right side hook (B, C) of the cover.

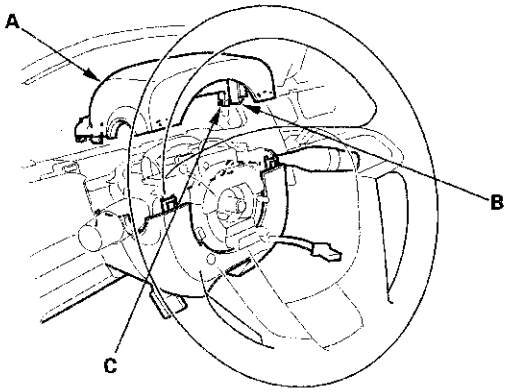

8. Remove the three screws (A, B), then remove the lower column cover (C).

Fastener Locations

A ▶ : Screw, 1 B ▶ : Screw, 2

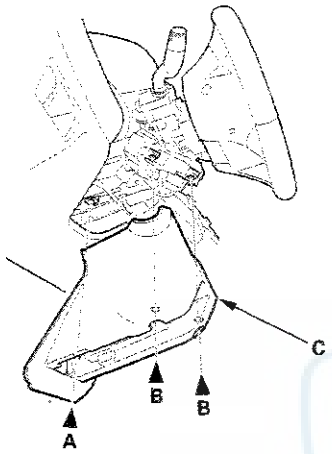

9. Install the upper and lower column covers in the reverse order of removal, and push the hooks into place securely.

Dashboard/Steering Hanger Beam Removal/Installation

Special Tools Required

KTC trim tool set SOJATP2014 *

* Available through the Honda Tool and Equipment Program; call 888-424-6857

SRS components are located in this area. Review the SRS component locations, 2-door (see page 24-21), 4-door (see page 24-19) and the precautions and procedures (see page 24-23) before doing repairs or service.

NOTE:

- Put on gloves to protect your hands.
- Take care not to scratch the dashboard, the body and the other related parts.
- Take care not to bend the brackets.
- Have an assistant help you when removing and installing the dashboard/steering hanger beam.
- Use the appropriate tool from the KTC trim tool set to avoid damage when removing components.

1. Do the battery terminal disconnection procedure (see page 22-89), then wait at least 3 minutes before beginning work.

2. Remove these items:

   - Driver's dashboard lower cover (see page 20-153)
   - Center console (see page 20-148)
   - Dashboard center lower cover, both sides (see page 20-157)
   - Glove box (see page 20-161)
   - Kick panels, both sides:
     – 2-door (see page 20-97)
     – 4-door (see page 20-99)
   - A-pillar trim, both sides (see page 20-101)
   - Steering column (see page 17-28)
   - Shift lever housing, M/T model (see page 13-65)
   - Shift lever, A/T model (see page 14-262)

(cont'd)

Dashboard/Steering Hanger Beam Removal/Installation (cont'd)

Driver's side

3. From under the dash, disconnect the left engine compartment wire harness connectors (A), the driver's door wire harness connector (B), the roof wire harness connectors (C), and the left side wire harness connector (D). Disconnect the left engine compartment wire harness connectors (E) and the left side wire harness connector (F) from the driver's under-dash fuse/relay box (G).

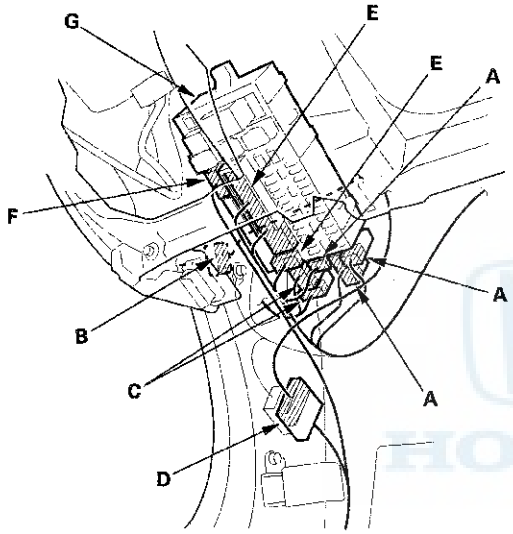

4. With climate control: From under the dash, disconnect the air hose (A), then remove it.

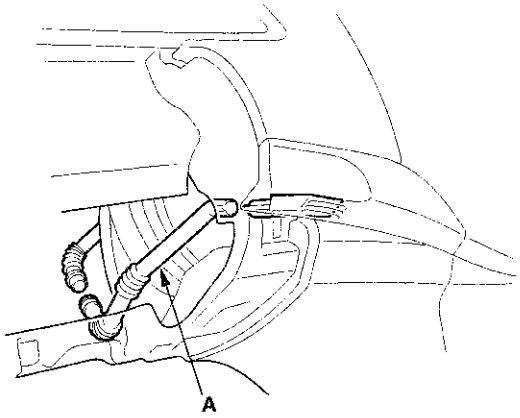

Middle portion (shift lever portion)

5. Remove the clip, and remove the left rear heater joint duct (A). Disconnect the floor wire harness connector (B), the SRS unit connector (C), the parking brake switch connector (D), and the yaw rate-lateral acceleration sensor connector (E), and detach the wire harness clips (F). Using a TORX T30 bit, remove the ground bolt (G).

Fastener Location

▷ : Clip, 1

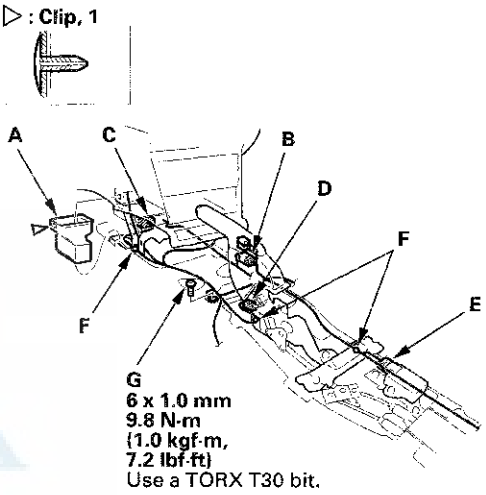

Middle portion (passenger's side)

6. From under the dash, disconnect the A/C wire harness connector (A).

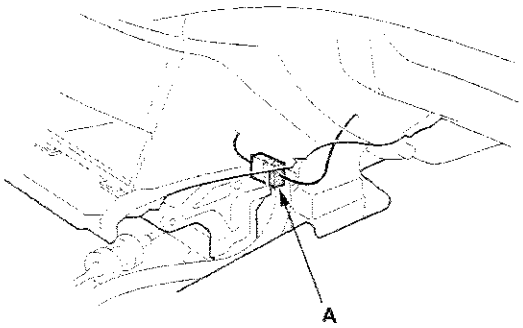

Passenger's side

7. From under the dash, disconnect the passenger's door wire harness connector (A), the right side wire harness connectors (B), the antenna lead connector (C), and the right engine compartment wire harness connectors (D). Disconnect the dashboard wire harness connectors (E) and the audio wire harness connector (F) from the passenger's under-dash fuse/relay box (G). Detach the harness clip (H). With premium sound system: Disconnect the stereo amplifier connectors (I).

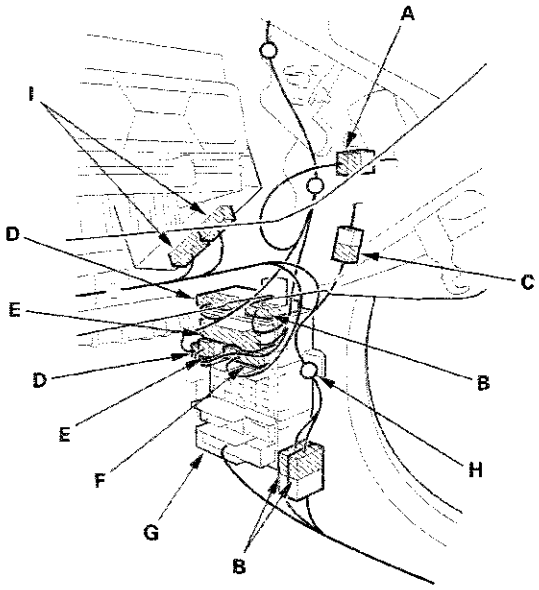

8. Detach all of the harness and the connector clips.

9. Detach the harness clip (A) and the clip fastening the relay (B) from the brake pedal support member (C). Remove the bolts (D, E), then remove the member, and disconnect the TPMS control unit connector (F).

Fastener Locations

D ▶ : Bolt, 1 E ▶ : Bolt, 1

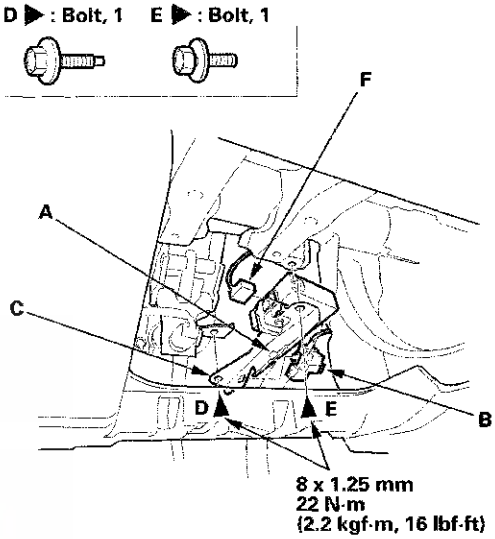

10. Remove bolts (A, B), then remove the center joint bracket (C).

Fastener Locations

A ▶ : Bolt, 2 B ▶ : Bolt, 2

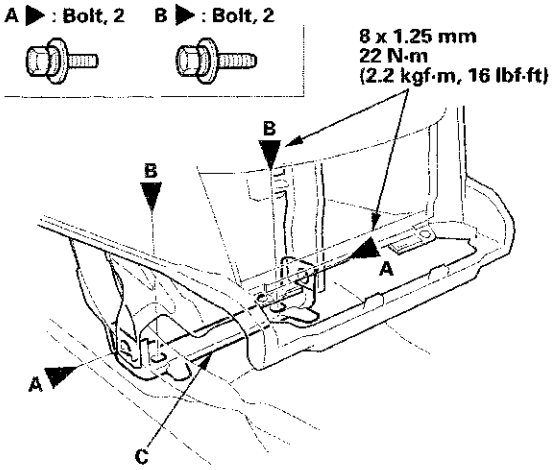

(cont'd)

Dashboard/Steering Hanger Beam Removal/Installation (cont'd)

11. Remove the special bolts (A) from outside the passenger's door.

    1. Remove the caps (B).
    2. Loosen the special bolts until they disengage from the threads on the hanger beam side bracket (C), and engage the inside threads of the collar bolts (D). The thread lock on the special bolts makes the special bolts and collar bolts turn together.
    3. Continue loosening the special bolts to turn the collar bolts into the fixed space adjusters (E) until the collar bolts engage the stoppers (F). This creates a gap (G) between the collar bolts and the body.
    4. Loosen the special bolts to disengage them from the collar bolts, then remove them.

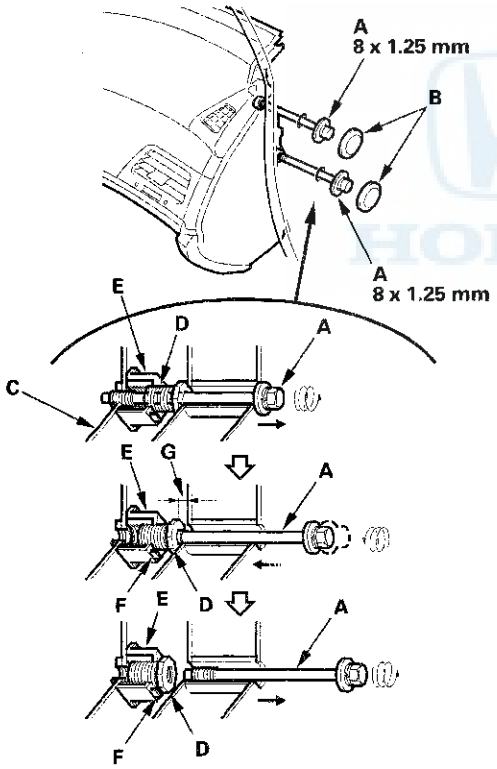

12. Check that the collar bolts (A) are seated in the space adjusters (B).

    1. Insert an 8 mm hex wrench in the collar bolt.
    2. Gently turn the wrench counterclockwise.
    3. If the wrench turns easily, continue turning until the the collar bolt seats and engages the stopper (C).
    4. If the wrench does not turn easily, the collar bolt is seated.

NOTE: If either collar bolt was not seated, replace the special bolts.

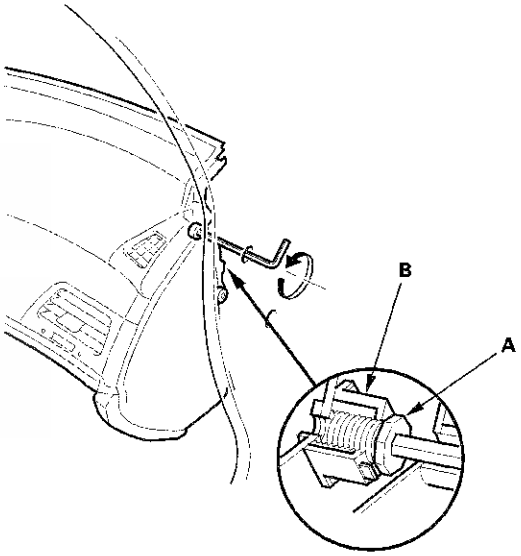

13. From outside the driver's door, remove the caps (A), then remove the bolts (B, C) from outside the driver's door.

Fastener Locations

B ▶ : Bolt, 3 C ▶ : Bolt, 2

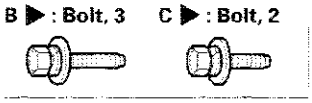

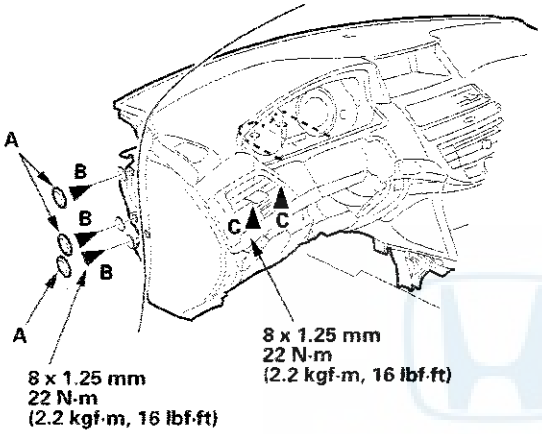

14. Lift up on the dashboard (A) to release it from the guide pins (B). Carefully remove the dashboard through the front door opening. Take care not to scratch the body with the collar nuts on the passenger's side.

NOTE: Do not rest the dashboard on its lower center cover opening, or it may be damaged. Lay it on its front or back.

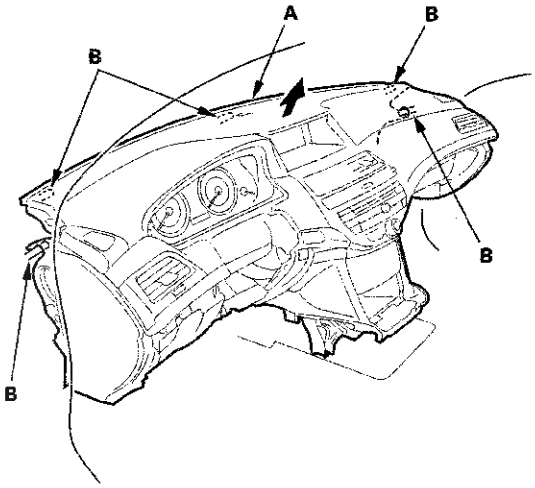

(cont'd)

Dashboard/Steering Hanger Beam Removal/Installation (cont'd)

15. Install the dashboard in the reverse order of removal, and note these items:

    - Make sure the dashboard fits onto the guide pins correctly
    - Before tightening the bolts, make sure the wire harnesses are not pinched.
    - Make sure the connectors are plugged in properly.
    - Make sure the collar bolts (A) turn easily by hand in the fixed space adjusters (B). Tighten the collar bolts by hand until they engage the stoppers (C) before reinstalling the dashboard.
    - Before reinstalling the dashboard, screw the special bolts (D) into the collar bolts and check that they turn together. If they do not turn together, replace the special bolts.
    - After setting the dashboard in the body, reinstall all of the mounting bolts but do not tighten them. First, tighten the driver's side bracket bolts to the specified torque. Next, tighten the special bolts to turn the collar bolts out of the space adjusters until the collar bolts contact the body. Continue tightening the special bolts to the specified torque.
    - Tighten all remaining mounting bolts to the specified torque.
    - Apply medium strength liquid thread lock to the bolts securing the center joint bracket and the dashboard before reinstallation.
    - After tightening the dashboard mounting bolts, tighten the center joint bracket mounting bolts, and then tighten the center frame mounting bolts.
    - Do the battery terminal reconnection procedure (see page 22-89).
    - If necessary, adjust the shift cable (see page 14-272).
    - Check for any DTCs that may have been set during repairs, and clear them.

Special bolt tightening on passenger's side

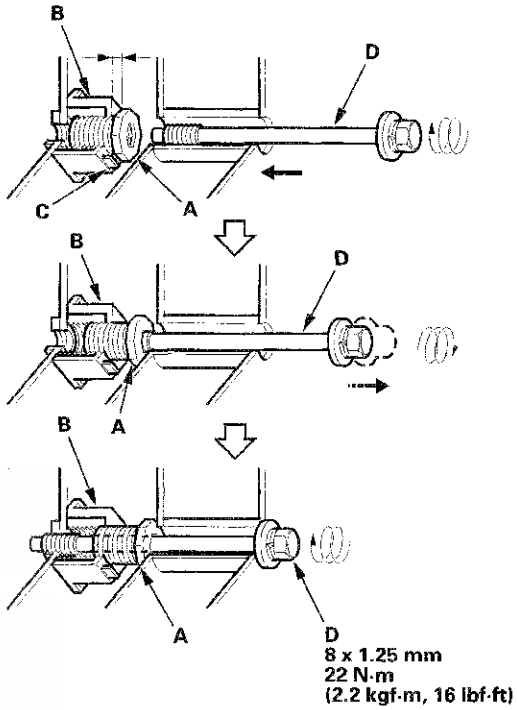

Dashboard/Steering Hanger Beam Disassembly/Reassembly

Special Tools Required
KTC trim tool set SOJATP2014 *
* Available through the Honda Tool and Equipment Program; call 888-424-6857

NOTE:
- Put on gloves to protect your hands.
- Take care not to scratch the dashboard, the body and the other related parts.
- Take care not to bend the brackets.
- Use the appropriate tool from the KTC trim tool set to avoid damage when removing components.

1. Remove the dashboard/steering hanger beam (see page 20-169).

2. Remove these items from the dashboard:

   - Instrument visor (see page 20-152)
   - Center pocket:
     – Without navigation system (see page 20-155)
     – With navigation system (see page 23-114)
   - Driver's outer dashboard trim (see page 20-154)
   - Driver's inner dashboard trim (see page 20-154)
   - Driver's dashboard side lid (see step 2 on page 20-163)
   - Driver's dashboard side vent (see page 20-163)
   - Driver's side defogger vent trim (see page 20-165)
   - Passenger's dashboard trim (see page 20-160)
   - Passenger's dashboard side lid (see step 6 on page 20-162)
   - Passenger's dashboard side vent (see page 20-163)
   - Gauge control module (see page 22-324)
   - Sunlight sensor, with climate control (see page 21-176)
   - In-car temperature sensor, with climate control (see page 21-174)
   - Audio disk changer, with navigation system (see page 23-113)
   - Passenger's airbag (see page 24-206)

3. With navigation system: Remove the bolts, then remove the center pocket frame (A) from the dashboard.

Fastener Locations
▶ : Bolt, 2

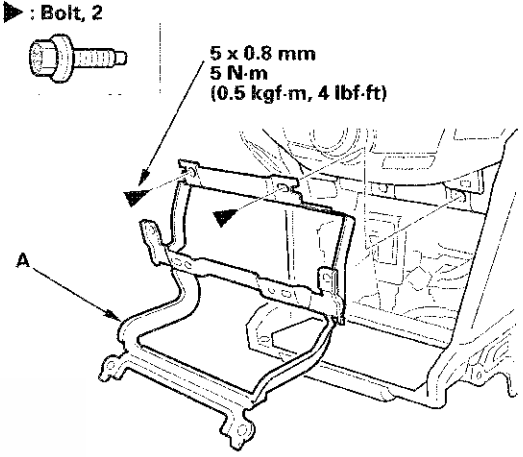

4. Remove these items from the dashboard:

   - Center display visor:
     – Without navigation system (see page 20-158)
     – With navigation system (see page 20-159)
   - Audio-HVAC module:
     – Without navigation system (see page 23-111)
     – With navigation system (see page 23-110)
   - Audio-HVAC display:
     – Without navigation system (see page 23-114)
     – With navigation system (see page 23-114)

Driver's side

5. Detach the harness clip (A) from the dashboard.

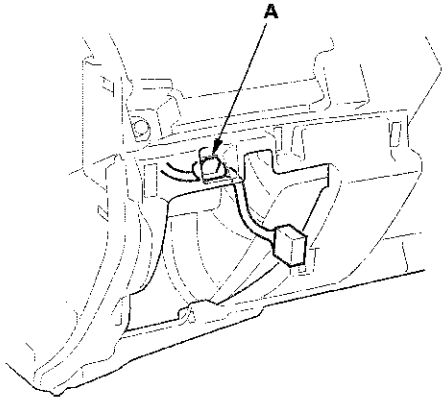

(cont'd)

Dashboard/Steering Hanger Beam Disassembly/Reassembly (cont'd)

Middle portion

6. Detach the harness clip (A) from the dashboard duct, and release the harness holder (B) from the dashboard.

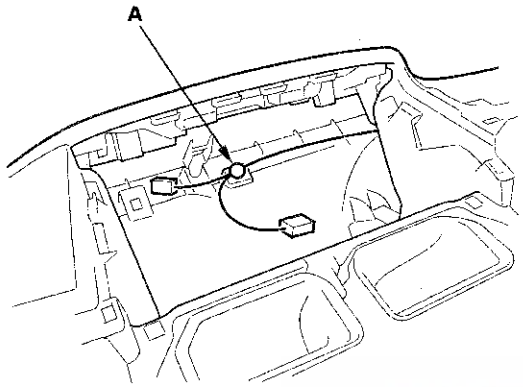

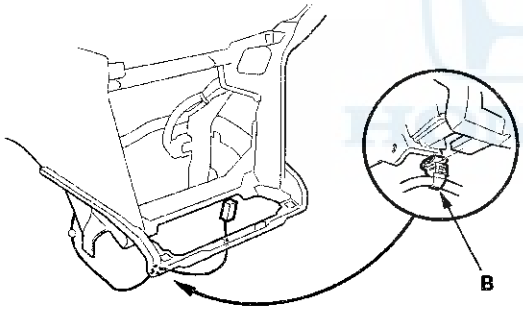

Passenger's side

7. Disconnect the glove box light bulb socket (A), and detach the harness clips (B) from the dashboard duct. Detach the harness clip (C) from the dashboard.

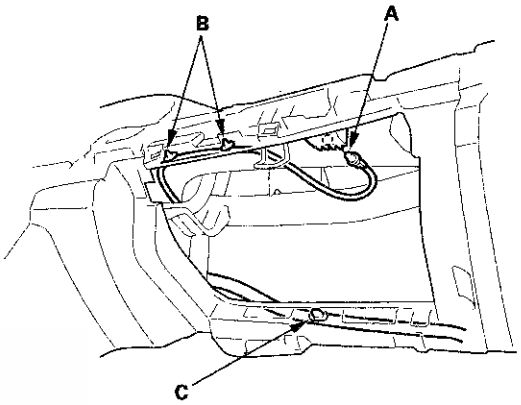

8. Remove the screw and the clips, then remove the dashboard center duct (A).

Fastener Locations

▶ : Screw, 1 ▷ : Clip, 2

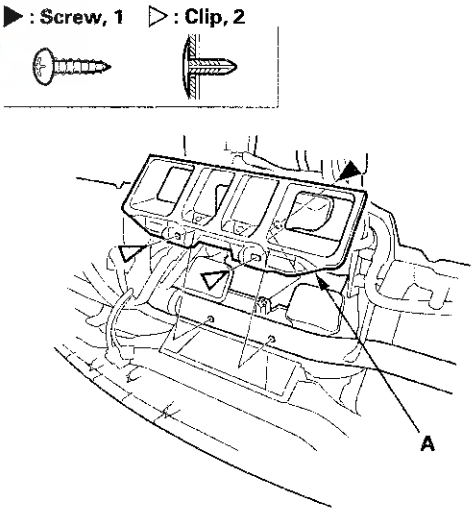

9. Remove the bolts (A) from the front of the dashboard, and remove the screws (B) from the back of the dashboard, then separate the dashboard (C) from the steering hanger beam (D).

Fastener Locations

A ▶ : Bolt, 10 B ▶ : Screw, 3

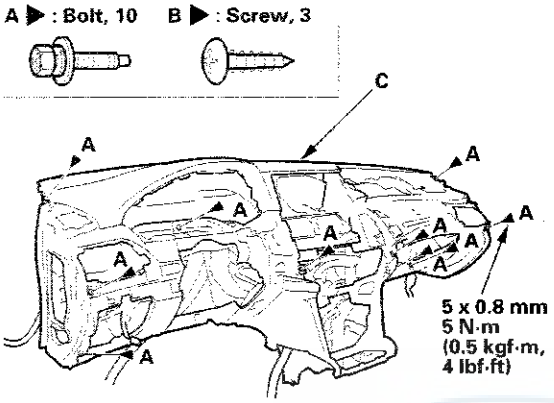

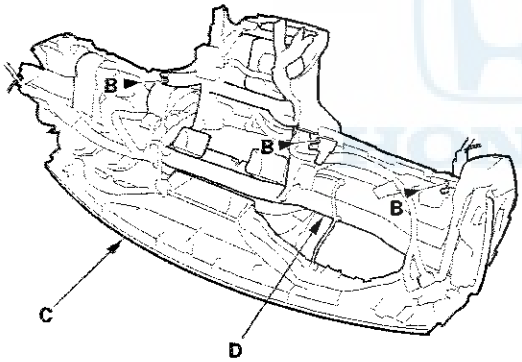

10. Assemble the dashboard and the steering hanger beam in the reverse order of disassembly, and note these items:

- Make sure the dashboard wire harness is not pinched.
- Make sure the glove box light bulb socket is connected properly.
- Push the harness clips and the harness holder into place securely.

Component Location Index

2-door

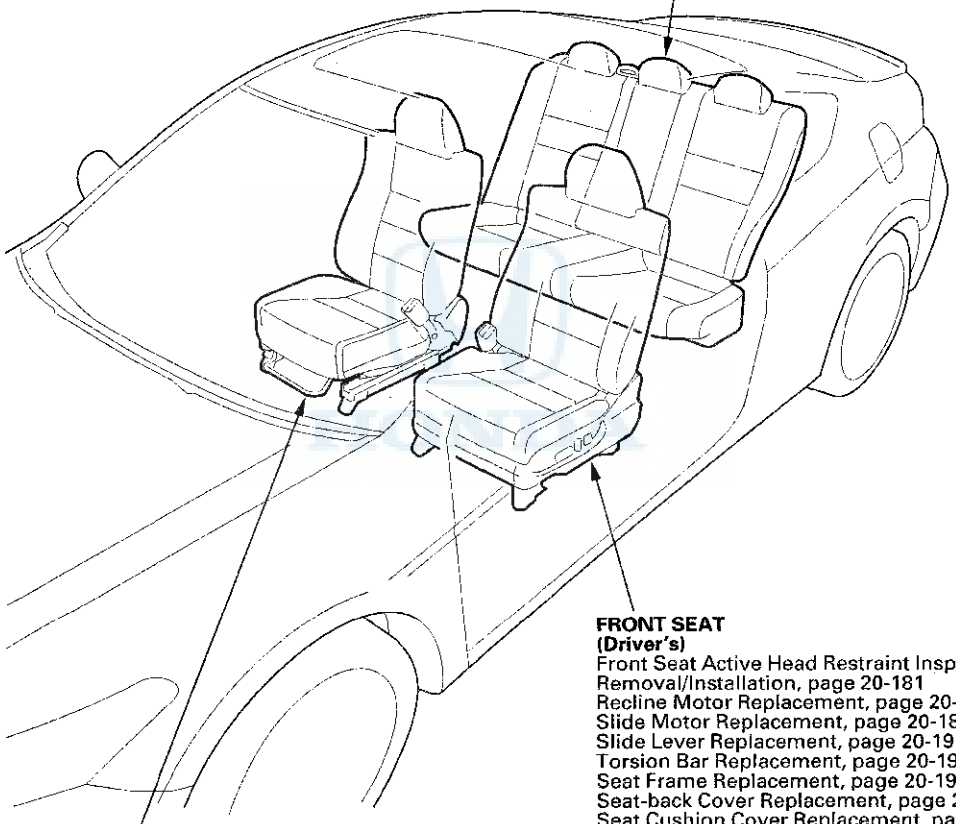

REAR SEAT
Removal/Installation, page 20-223
Seat-back Latch Replacement, page 20-226
Seat-back Release Lever/Cable
Removal/Inatallation, page 20-227
Seat-back Cover Replacement, page 20-232
Seat Cushion Cover Replacement, page 20-237

FRONT SEAT
(Driver's)
Front Seat Active Head Restraint Inspection, page 20-180
Removal/Installation, page 20-181
Recline Motor Replacement, page 20-187
Slide Motor Replacement, page 20-189
Slide Lever Replacement, page 20-191
Torsion Bar Replacement, page 20-191
Seat Frame Replacement, page 20-193
Seat-back Cover Replacement, page 20-199
Seat Cushion Cover Replacement, page 20-209

FRONT SEAT
(Passenger's)
Front Seat Active Head Restraint Inspection, page 20-180
Removal/Installation, page 20-181
Slide Lever Replacement, page 20-191
Rear Seat Access Cable Replacement, page 20-192
Seat Frame Replacement, page 20-196
Seat-back Cover Replacement, page 20-199
Seat Cushion Cover Replacement, page 20-209

4-door

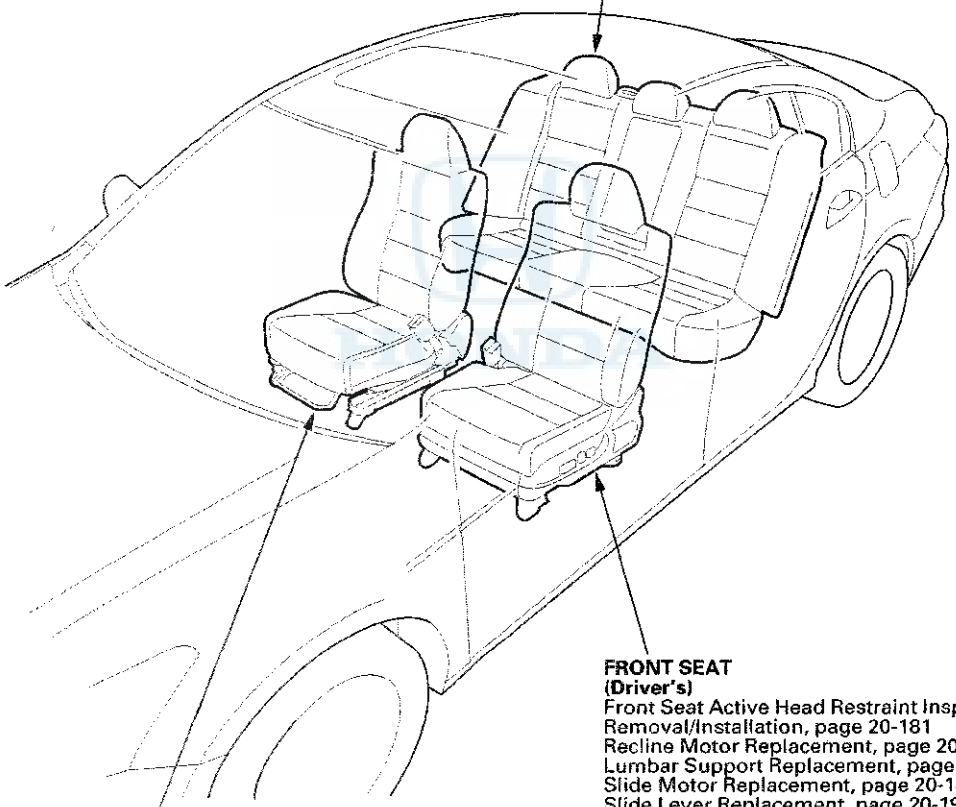

REAR SEAT
Removal/Installation, page 20-223
Seat-back Latch Replacement, page 20-226
Seat-back Release Lever/Cable Removal/Installation, page 20-227
Armrest Replacement, page 20-228
Trunk Pass-through Lid Lock Cylinder Replacement, page 20-230
Trunk Pass-through Lid Replacement, page 20-231
Armrest Beverage Holder Replacement, page 20-231
Seat-back Cover Replacement, page 20-234
Seat Side Bolster Cover Replacement, page 20-236
Seat Cushion Cover Replacement, page 20-237

FRONT SEAT
(Driver's)
Front Seat Active Head Restraint Inspection, page 20-180
Removal/Installation, page 20-181
Recline Motor Replacement, page 20-187
Lumbar Support Replacement, page 20-188
Slide Motor Replacement, page 20-189
Slide Lever Replacement, page 20-191
Seat Frame Replacement, page 20-193
Seat-back Cover Replacement, page 20-205
Seat Cushion Cover Replacement, page 20-218

FRONT SEAT
(Passenger's)
Front Seat Active Head Restraint Inspection, page 20-180
Removal/Installation, page 20-181
Slide Lever Replacement, page 20-191
Seat Frame Replacement, page 20-198
Seat-back Cover Replacement, page 20-205
Seat Cushion Cover Replacement, page 20-218

Front Seat Active Head Restraint Inspection

NOTE: If the vehicle has been in a collision, always inspect the active head restraint, even if they appear reusable, by doing the following procedure.

1. Manual seat/manual height adjustable seat: Fold the seat-back forward, then recline the seat-back to the first lock position, and adjust the head restraint to the highest position.

2. 10-way power seat: With the recline switch, move the seat-back fully forward.

3. Apply masking tape on the top of the head restraint.

4. Make marks (A) on both sides at 255 mm (10.0 in.) upward from the roots of the head restraint frame (B) along the back of the head restraint (C) surface. Make a center of these points as a datum point (D).

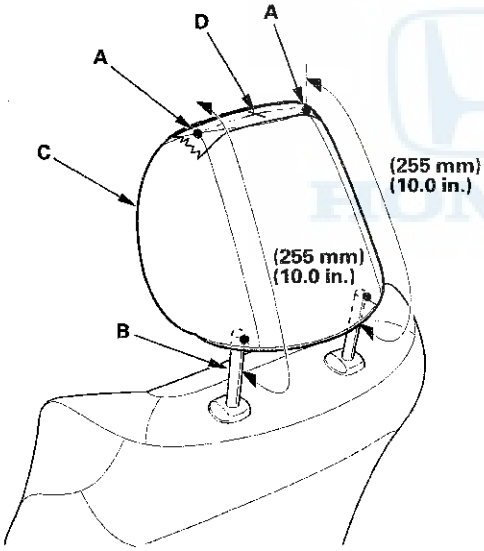

5. Push the head restraint (A) forward, and check: With a scale, measure the level amount of the head restraint movement. The head restraint should move more than 50 mm (2.0 in.) without resistance. If it is less than 50 mm (2.0 in.), or the head restraint doesn't move smoothly, replace the seat-back frame:

   - Driver's seat (see page 20-193)
   - Passenger's seat:
     - 2-door (see page 20- 196)
     - 4-door (see page 20- 198)

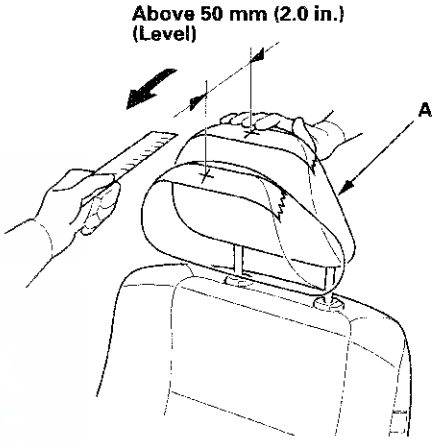

Front Seat Removal/Installation

Special Tools Required
KTC trim tool set SOJATP2014 *
* Available through the Honda Tool and Equipment Program; call 888-424-6857

SRS components are located in this area. Review the SRS component locations, 2-door (see page 24-21), 4-door (see page 24-19) and the precautions and procedures (see page 24-23) before doing repairs or service.

- Check the operation of the driver's seat position sensor after any of these actions (see page 24-40):
  - Driver's seat position sensor replacement
  - Cover plate (front side of driver's seat slide rail) replacement
- Calibrate the ODS unit after any of the these actions (see page 24-38):
  - Front passenger's seat replacement (including any seat components)
  - Replacement of the seat weight sensors
  - After a vehicle collision

NOTE:
- Put on gloves to protect your hands.
- When prying with a flat-tip screwdriver, wrap it with protective tape to prevent damage.
- Take care not to scratch the body or tear the seat covers.
- Use the appropriate tool from the KTC trim tool set to avoid damage when removing components.

1. Tilt the steering wheel all the way up, and push it all the way in. Adjust the seat-back recline to a middle position.
2. 2-door passenger's seat: Carefully insert the tip of a small screwdriver (A) through the hole in the back of the front seat belt lower anchor cover (B) and into the hole in the front seat belt lower anchor (C). Unlock the lower anchor by pushing in on the screwdriver. Remove the screwdriver, and then detach the front seat belt anchor plate (D) and the anchor cover from the lower anchor.

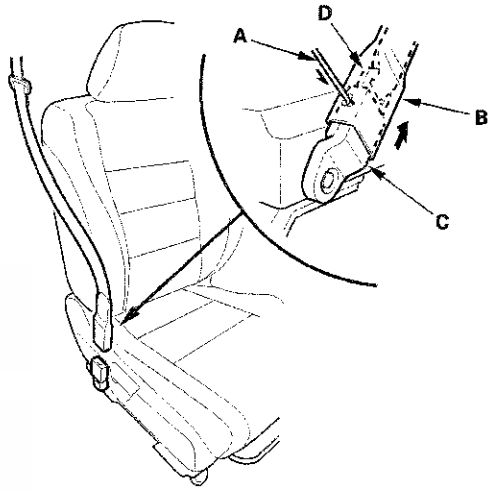

3. 4-door: Slide the front seat all the way forward. Carefully pry up on the bottom of the anchor cover (A) to release the hooks (B) and the tab (C), then remove the cover by pulling it upward.

Driver's seat

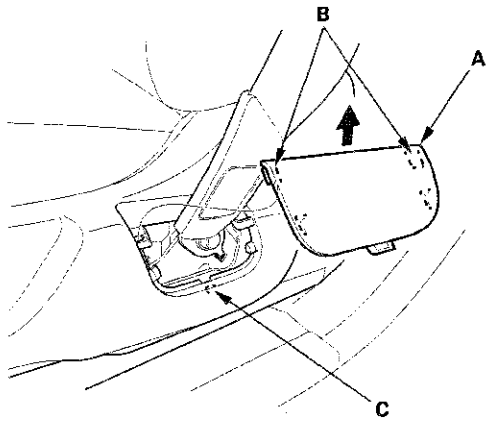

(cont'd)

Front Seat Removal/Installation (cont'd)

Passenger's seat

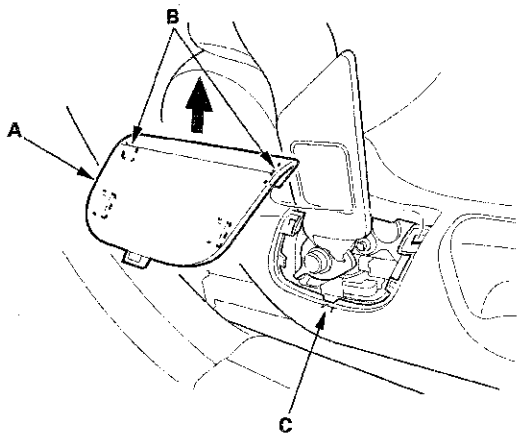

4. 4-door: Remove the lower anchor bolt (A).

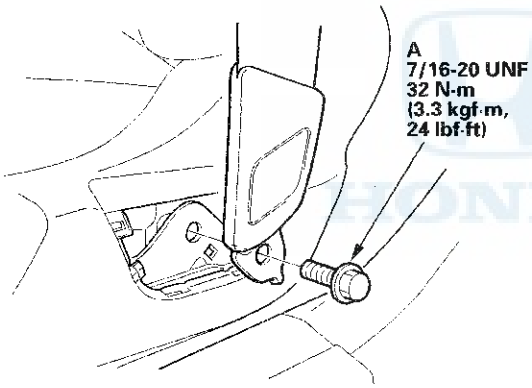

5. Remove the seat track outer end covers (A) and the seat track inner end covers (B) from the back of both seat tracks.

2-door driver's seat (10-way power seat)

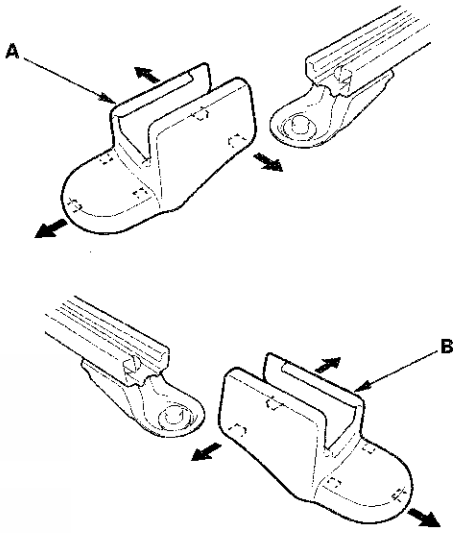

2-door driver's seat (manual height adjustable seat)

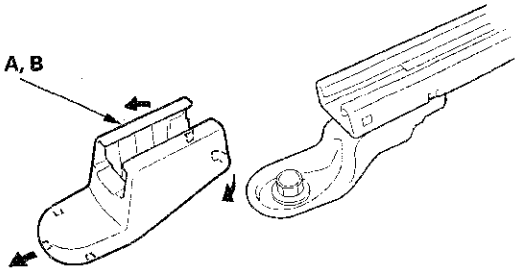

2-door passenger's seat (manual seat)

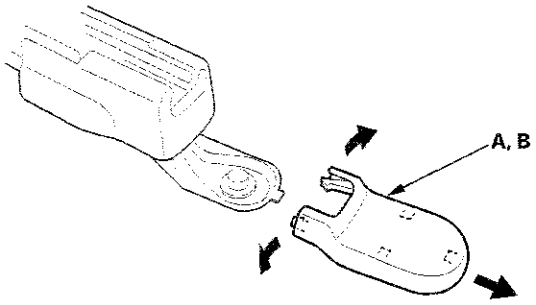

4-door driver's seat (10-way power seat)

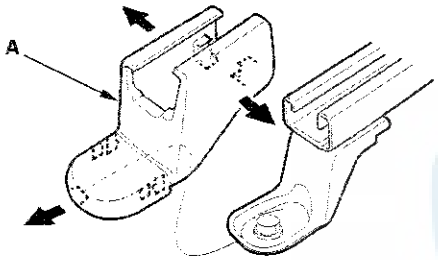

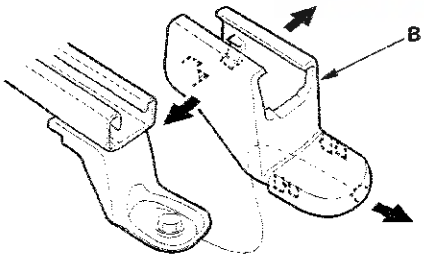

4-door driver's seat (manual height adjustable seat)

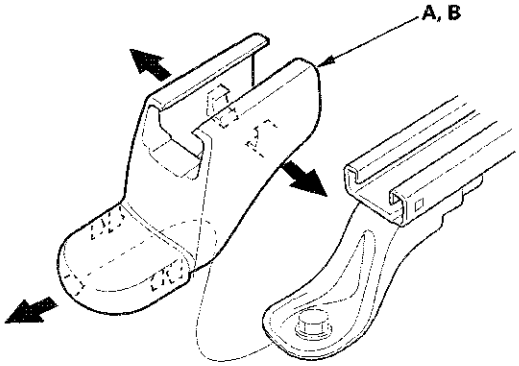

4-door passenger's seat (manual seat)

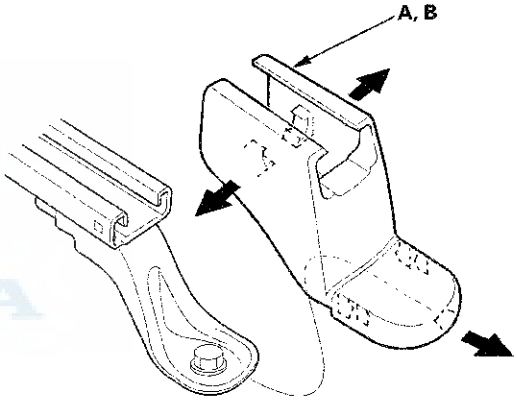

(cont'd)

Front Seat Removal/Installation (cont'd)

6. Remove the rear bolts.

Fastener Locations

▶ : **Bolt, 2**

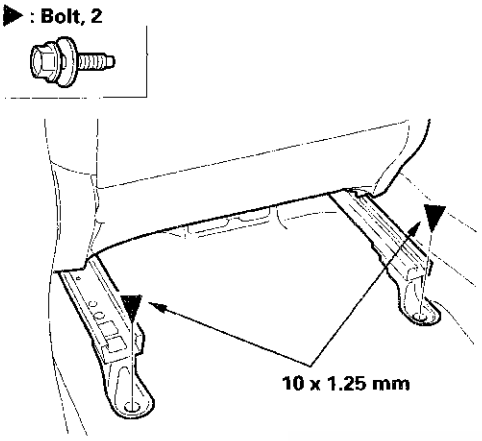

7. Slide the front seat all the way back, and remove the front bolts.

Fastener Locations

▶ : **Bolt, 2**

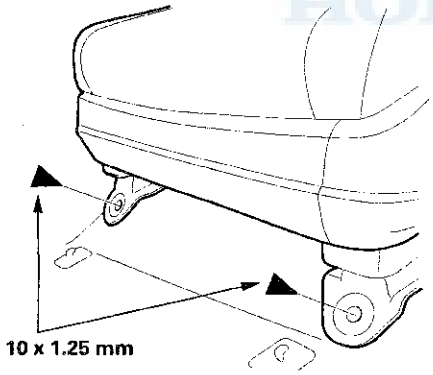

8. Do the battery terminal disconnection procedure (see page 22-89), then wait at least 3 minutes before removing the seat.

9. Lift up the front seat, then detach the harness clips (A). Disconnect the floor wire harness connector (B), the side airbag connector (C), and the seat belt buckle switch connector (D). Driver's manual height adjustable seat: Disconnect the seat position sensor connector (E).

2-door driver's seat (10-way power seat)

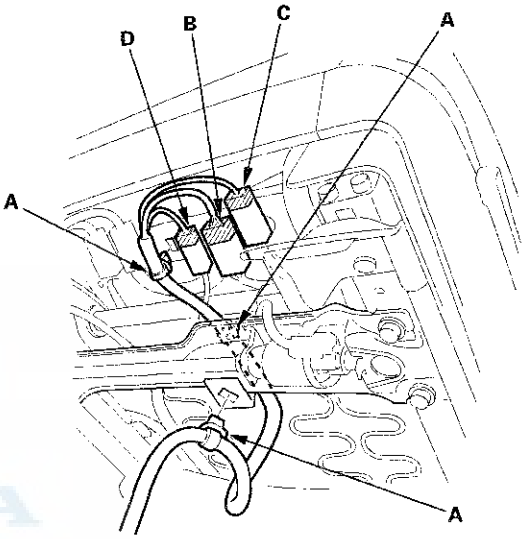

4-door driver's seat (10-way power seat)

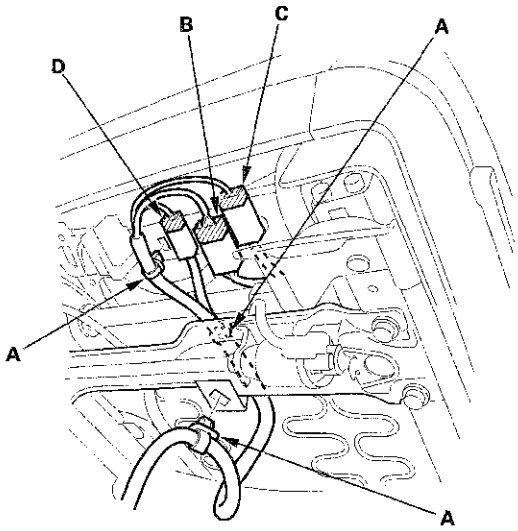

2-door driver's seat (manual height adjustable seat)

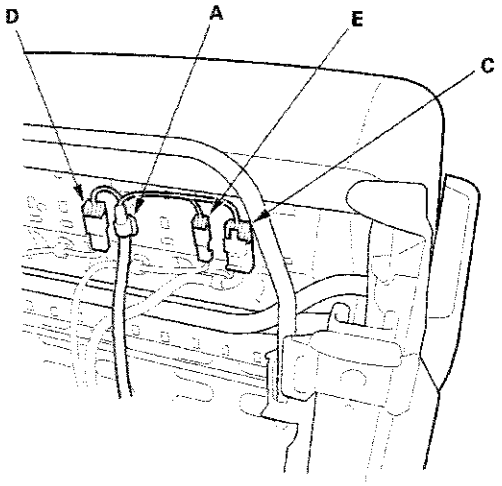

4-door driver's seat (manual height adjustable seat)

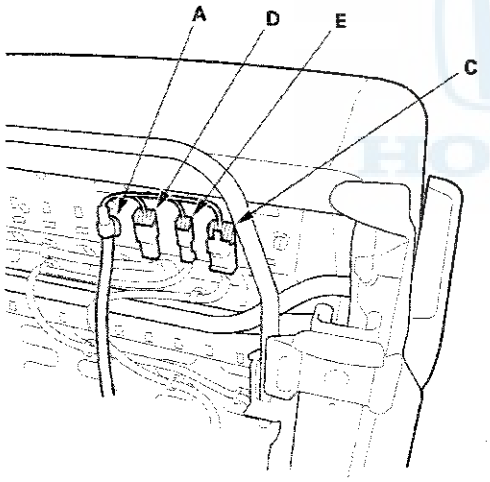

2-door passenger's seat (manual seat)

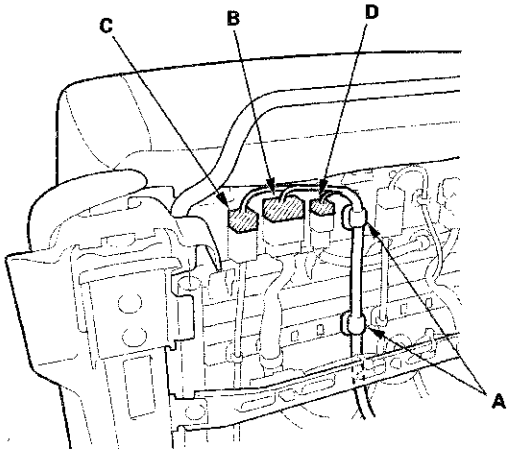

4-door passenger's seat (manual seat)

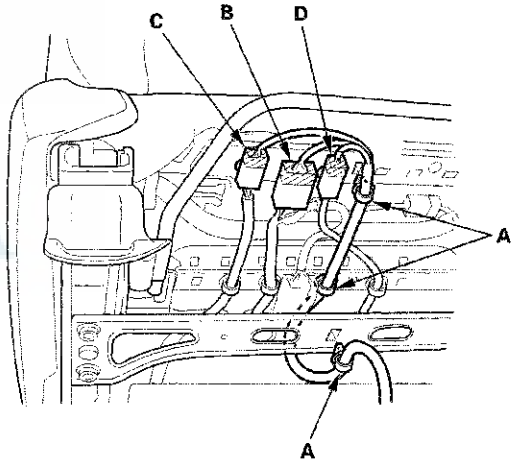

10. Remove the head restraint.

11. With the help of an assistant, carefully remove the front seat through the front door opening.

(cont'd)

Front Seat Removal/Installation (cont'd)

12. Install the seat in the reverse order of removal, and note these items:

    - Tighten the seat mounting bolts to the specified torque in the sequence shown. Slide the seat all the way back and tighten ① and ②, then slide it forward and tighten ③ and ④. The driver's seat is shown; the passenger's seat is symmetrical.
    - The triangle marks (A) on the anchor plate (B) and the lower anchor (C) must face the same side. Insert the anchor plate into the lower anchor, and make sure that it is locked securely. Make sure each connector is plugged in properly.
    - Tighten the bolts by hand first, then tighten them to specified torque with a torque wrench.
    - Do the battery terminal reconnection procedure (see page 22-89).
    - Check for any DTCs that may have been set during repairs, and clear them.

Seat mounting bolts tightening sequence

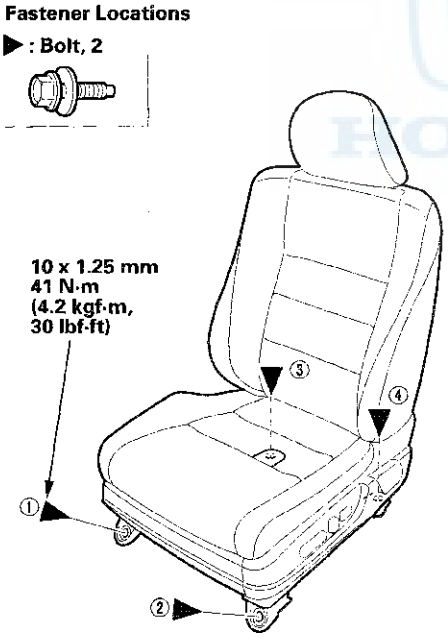

2-door passenger's front seat belt lower anchor installation

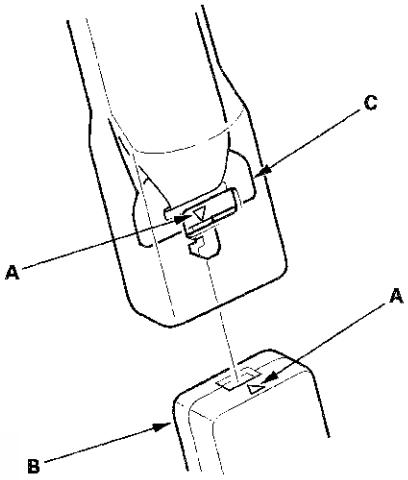

Front Seat Recline Motor Replacement

Driver's Seat (10-way Power Seat)

SRS components are located in this area. Review the SRS component locations, 2-door (see page 24-21), 4-door (see page 24-19) and the precautions and procedures (see page 24-23) before doing repairs or service.

NOTE: Put on gloves to protect your hands.

1. Remove the front seat (see page 20-181).

2. Remove the seat-back cover and pad:

   - 2-door (see page 20-199)
   - 4-door (see page 20-205)

3. 4-door driver's seat with lumbar support: Disconnect and detach the lumbar support motor connector (A), and detach the harness clip (B).

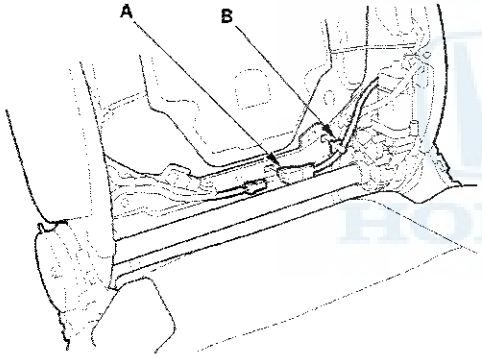

4. Release the push nut (A) from the motor side end of the connecting rod (B), gently tap on the motor side of the connecting rod to remove it from the recline motor (C) and both recline adjusters (D).

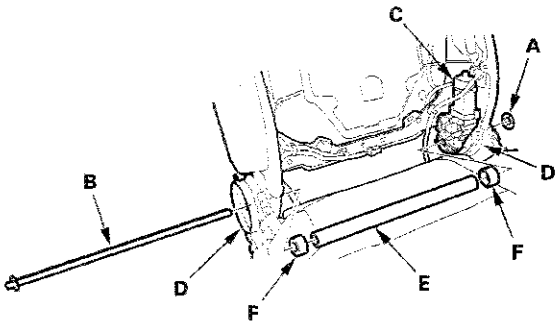

5. Remove the rod cover (E) and the collars (F).

6. Remove the bolt, then remove the recline motor (A). 4-door driver's seat is shown; 2-door driver's seat is similar.

Fastener Location

▶ : Bolt, 1

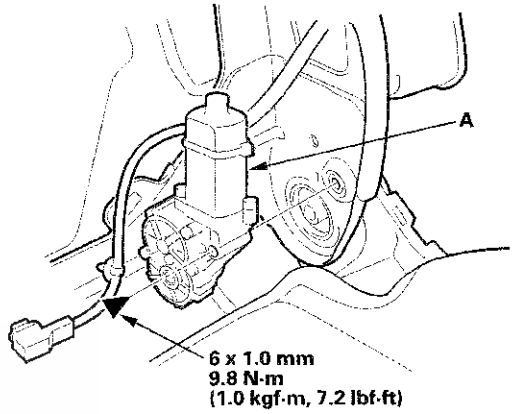

7. Install the motor in the reverse order of removal, and note these items:

   - Replace the push nut with a new one. Make sure the push nut is installed correctly.
   - 4-door driver's seat: Make sure the lumbar support motor connector is plugged in properly, and push the harness clip into place securely.
   - Apply medium strength liquid thread lock to the mounting bolt before reinstallation.

Front Seat Lumbar Support Replacement

4-door Driver's Seat (For Some Models)

SRS components are located in this area. Review the SRS component locations (see page 24-19) and the precautions and procedures (see page 24-23) before doing repairs or service.

NOTE:
- Put on gloves to protect your hands.
- Take care not to kink the cable.
- Take care not to tear the seams or damage the seat covers.

1. Remove the front seat (see page 20-181).
2. Remove the back cover (see step 3 on page 20-205).
3. Release the hook strips as needed, then turn over the seat-back cover (see step 5 on page 20-206).
4. Remove the cable band (A) fastening the lumbar support cable (B).

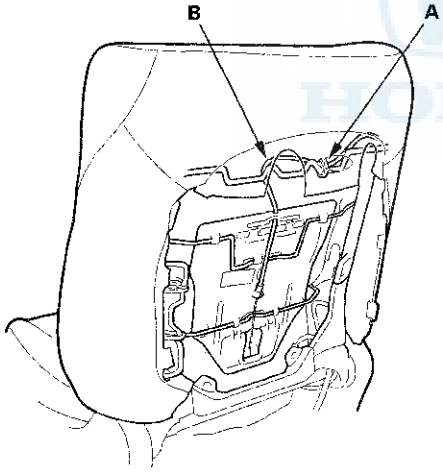

5. Release the upper wire (A) from both seat-back side frames (B) of inside the seat-back.

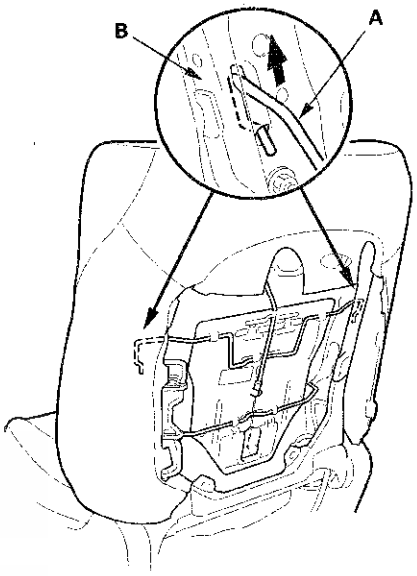

6. Release the lower wire (A) from both active head restraint links (B) of inside the seat-back.

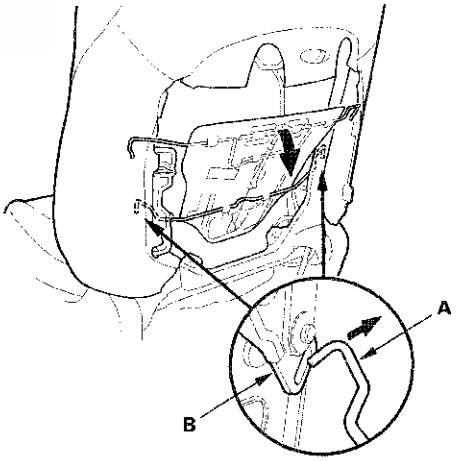

7. Remove the lumbar support motor cover (A).

   -1 Release the cover from the lower hooks (B).
   -2 Pull the cover upward to release it from the upper hook (C).

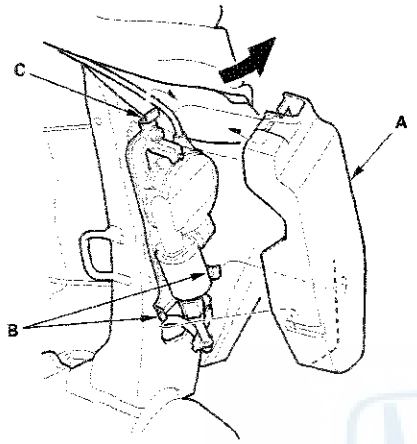

8. Disconnect the lumbar support motor connector (A), and detach the harness clip (B). Remove the nuts, then remove the lumbar support motor (C).

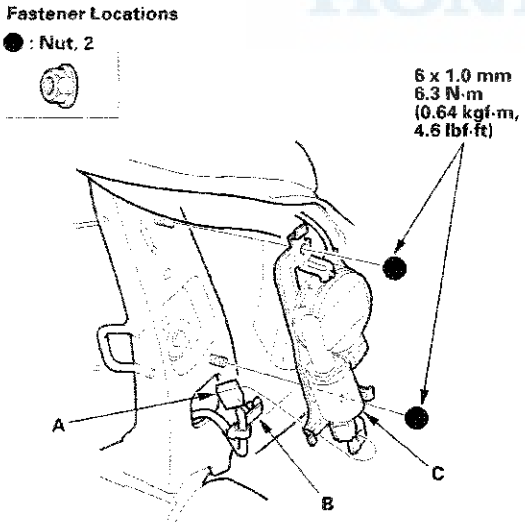

9. Install the lumbar support in the reverse order of removal, and note these items:

   - Make sure the connector is plugged in properly.
   - To prevent wrinkles when installing a seat-back cover, make sure the material is stretched evenly over the pad before securing the hook strips.
   - Replace the back panel clips with new ones.

Front Seat Slide Motor Replacement

SRS components are located in this area. Review the SRS component locations (see page 24-19) and the precautions and procedures (see page 24-23) before doing repairs or service.

4-door Driver's Seat (10-way Power Seat)

NOTE:
- Put on gloves to protect your hands.
- Take care not to tear the seams or damage the seat covers.

1. Remove the front seat (see page 20-181).

2. Remove the flex cable (A) and the cable housing (B).

   -1 Release the housing from the hooks (C).
   -2 Disconnect the cable from the worm gear (D) in the inner seat track by pulling the housing out.
   -3 Disconnect the cable from the slide motor (E).

   NOTE: Take care not to kink the cable.

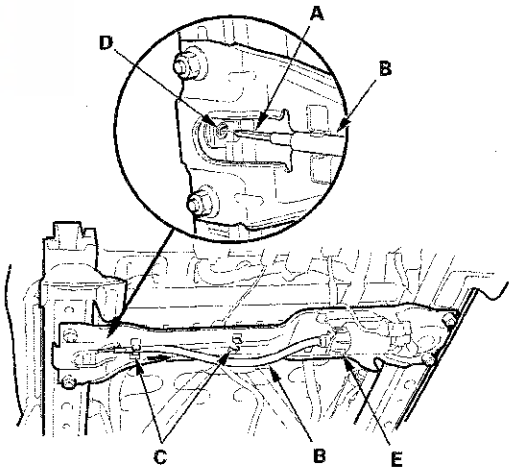

(cont'd)

Front Seat Slide Motor Replacement (cont'd)

3. Disconnect the slide motor connector (A), then remove the slide motor (B) from the slide motor bracket (C) while disconnecting the motor from the short flex cable (D).

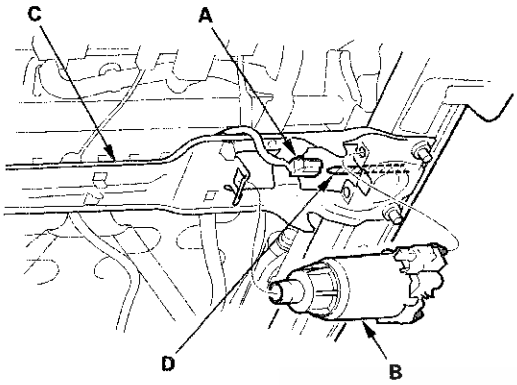

4. Remove the short flex cable (A) from the worm gear (B) in the outer seat track by pulling it out.

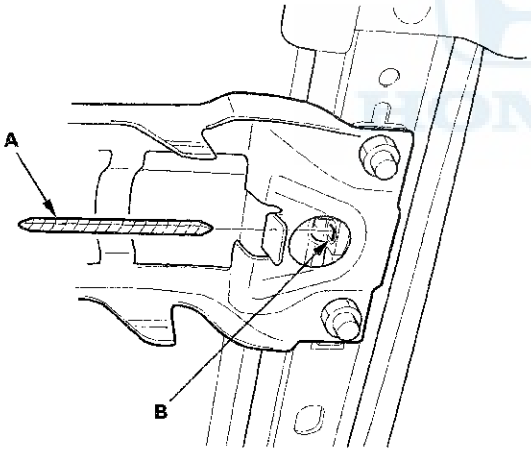

5. Remove the motor end mounting (A) from the slide motor (B).

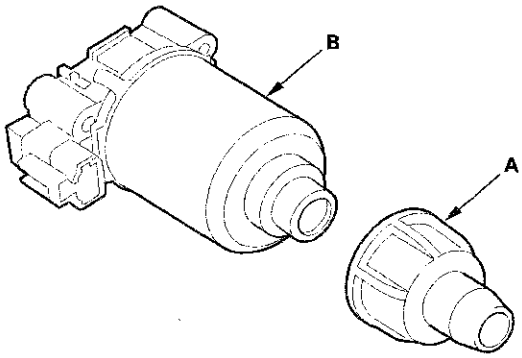

6. Install the motor in the reverse order of removal, and note these items:

- Apply multipurpose grease to the worm gear portions in both seat tracks.
- Before installing the slide motor to the slide motor bracket, install the short flex cable to the slide motor.
- Before installing the slide motor bracket to the seat tracks, make sure both seat tracks are located forward fully.
- Make sure the short flex cable and the flex cable are connected properly.

Front Seat Slide Lever Replacement

Manual Height Adjustable Seat/Manual Seat

NOTE:
- Put on gloves to protect your hands.
- Take care not to tear the seams or damage the seat covers.

1. Remove the front seat (see page 20-181).

2. Lift up the front seat, and pull the slide lever (A) out while prying up the spring (B) from the lever holders (C) of both seat tracks, then remove the lever.

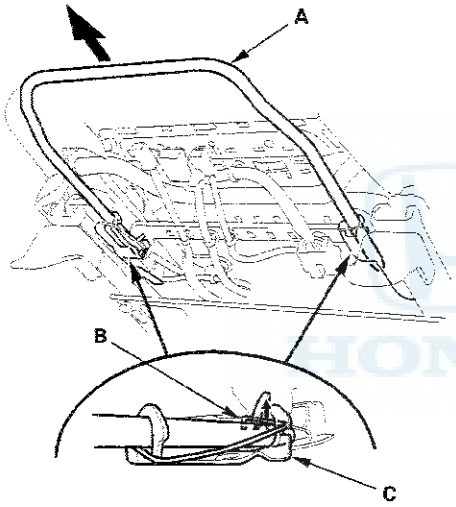

3. Install the slide lever by pushing on it into the lever holders of both seat tracks until the springs snap the slits in the lever.

4. Apply multipurpose grease to the pivot portions of the slide locks.

Front Seat Torsion Bar Replacement

2-door Manual Height Adjustable Seat

NOTE:
- Put on gloves to protect your hands.
- Take care not to tear the seams or damage the seat covers.

1. Remove the front seat (see page 20-181).

2. Adjust the seat to its maximum height.

3. Release the hook strips from both sides and under of the seat cushion frame, then loosen the seat cushion cover (see step 21 on page 20-216).

4. Lever a hooked shaped end of the front seat torsion bar (A) down using a large flat-tip screwdriver.

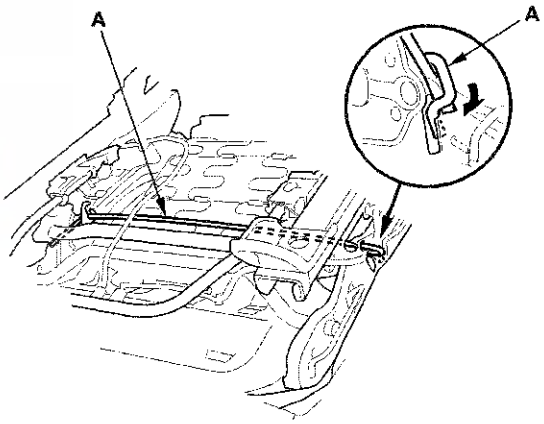

(cont'd)

Front Seat Torsion Bar Replacement (cont'd)

5. While holding the torsion bar (A) twisted, pull the end of it out of the seat frame, then carefully loosen the torsion bar.

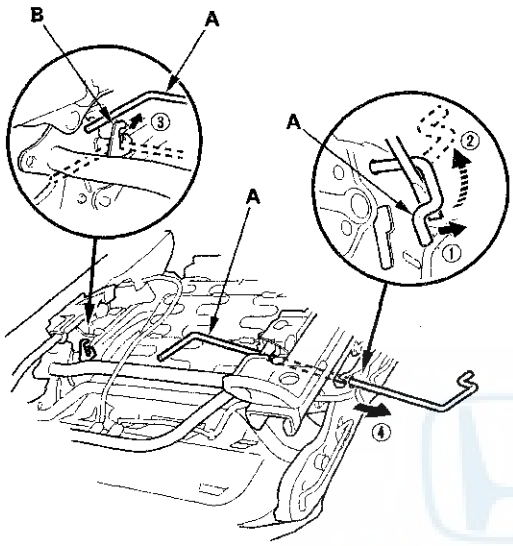

6. Remove the other side end of the torsion bar from the hook (B), then remove the torsion bar from the seat frame.

7. Install the torsion bar in the reverse order of removal.

Rear Seat Access Cable Replacement

2-door Passenger's Seat (Manual Seat)

NOTE:
- Put on gloves to protect your hands.
- Take care not to kink the cable.
- The right rear seat access cable is shown; the left rear seat access cable is symmetrical.

1. Remove the front seat (see page 20-181).

2. Remove the seat cushion cover/pad (see page 20-209).

3. Note positions of the rear seat access cable (A), then remove the cable.

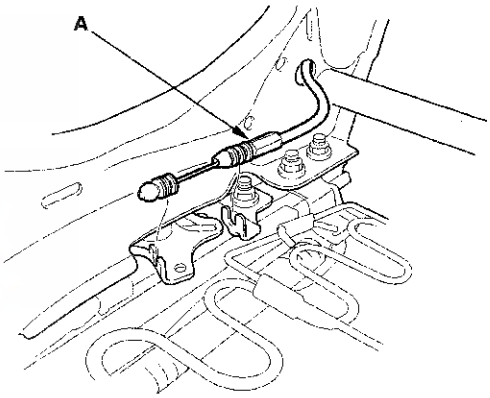

4. Remove the screw, then remove the rear seat access cable (A).

Fastener Location

▶ : Screw, 1

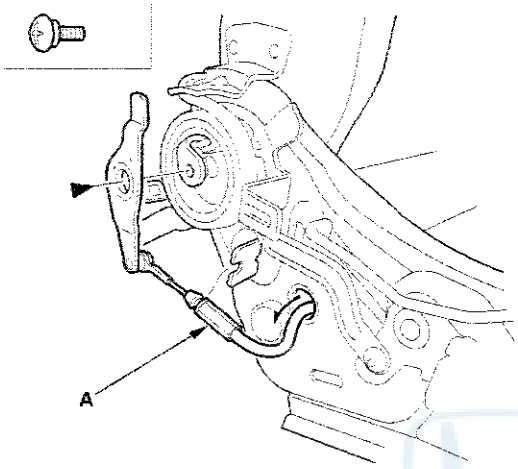

5. Install the rear seat access cable in the reverse order of removal, and note these items:

   - Make sure the cable is connected securely.
   - Install the cable in the same positions noted in step 3. Check the rear seat access operation: Make sure both of the seat tracks unlatches simultaneously and the seat slides forward when the seat-back is folded down.

Front Seat Frame Replacement

Special Tools Required
KTC trim tool set SOJATP2014 *
* Available through the Honda Tool and Equipment Program; call 888-424-6857

Driver's Seat

Check the operation of the driver's seat position sensor after any of these actions (see page 24-40):

- Driver's seat position sensor replacement
- Cover plate (front side of driver's seat slide rail) replacement

NOTE:
- Put on gloves to protect your hands.
- Use the appropriate tool from the KTC trim tool set to avoid damage when removing components.
- If the side airbag has deployed, replace the seat frame and related parts with new ones (see page 24-202).

1. Remove the front seat (see page 20-181).

2. Remove these items:

   - Front seat-back cover/pad:
     - 2-door (see page 20- 199)
     - 4-door (see page 20- 205)
   - Front seat cushion cover/pad:
     - 2-door (see page 20- 209)
     - 4-door (see page 20- 218)
   - Seat belt buckle (see page 24-10)
   - Seat position sensor (see page 24-232)
   - Side airbag (see page 24-208)

(cont'd)

Front Seat Frame Replacement (cont'd)

3. Detach the clips, then remove the height outer cover (2-door)/the upper rail outer cover (A) (4-door).

10-way power seat

Fastener Locations

▷ : Clip, 4

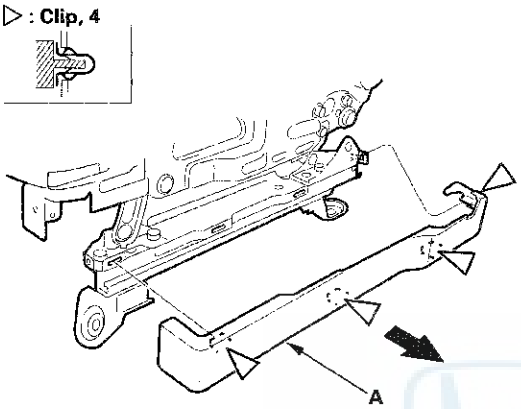

Manual height adjustable seat

Fastener Location

▷ : Clip, 1

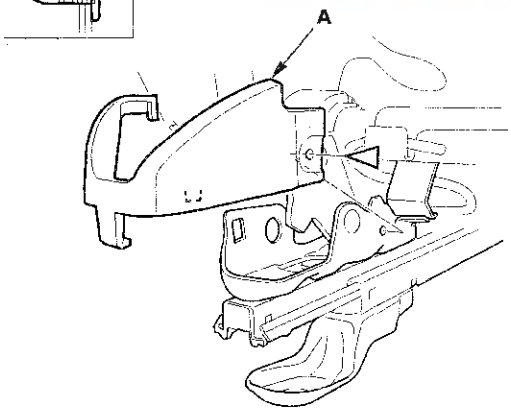

4. Detach the clip, then remove height inner cover (2-door)/the upper rail inner cover (A) (4-door).

10-way power seat

Fastener Location

▷ : Clip, 1

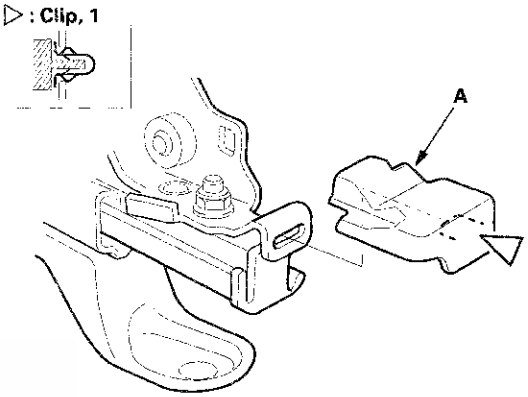

Manual height adjustable seat

Fastener Location

▷ : Clip, 1

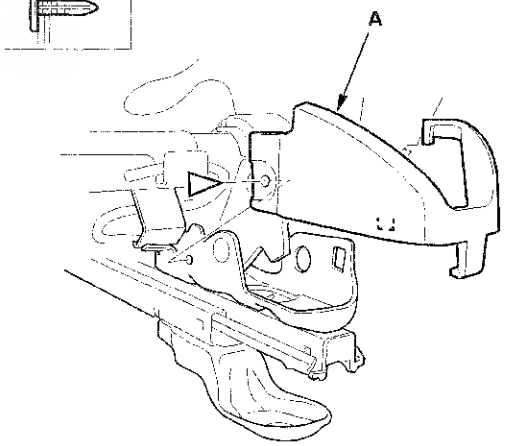

5. Remove the recline inner cover (A) and the center inner cover (B) from the seat frame (C).

10-way power seat

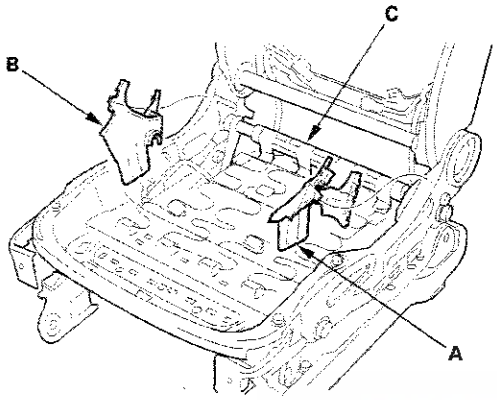

Manual height adjustable seat

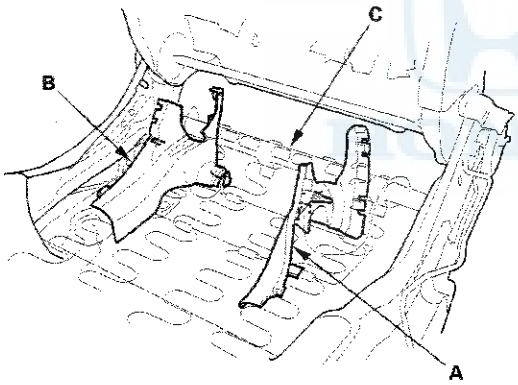

6. 10-way power seat: Remove the rear gear outer cover (A) and the rear gear inner cover (B).

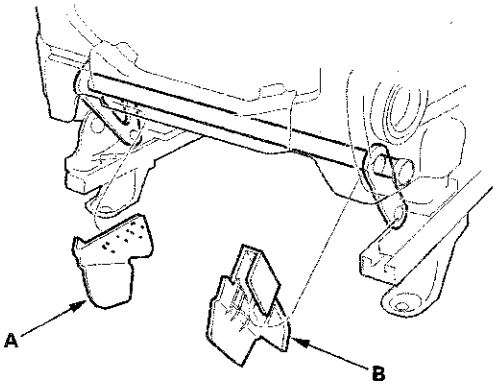

7. Install the new seat frame in the reverse order of removal, and note these items:

- If the clips are damaged or stress-whitened, replace them with new ones.
- Push the clips into place securely.

Front Seat Frame Replacement (cont'd)

Special Tools Required
KTC trim tool set SOJATP2014 *
* Available through the Honda Tool and Equipment Program; call 888-424-6857

2-door Passenger's Seat

Calibrate the ODS unit after any of the these actions (see page 24-38):

- Front passenger's seat replacement (including any seat components)
- Replacement of the seat weight sensors
- After a vehicle collision

NOTE:
- Put on gloves to protect your hands.
- Use the appropriate tool from the KTC trim tool set to avoid damage when removing components.
- If the side airbag has deployed, replace the seat frame and related parts with new ones (see page 24-202).

1. Remove the front seat (see page 20-181).

2. Remove these items:

   - Front seat-back cover/pad (see page 20-199)
   - Front seat cushion cover/pad (see page 20-209)
   - Seat belt buckle (see page 24-10)
   - ODS unit (see page 24-230)
   - Side airbag (see page 24-208)

3. Slide the front seat frame rearward fully.

4. While releasing the tabs (A), disengage the hooks (B) from the rear outer seat weight sensor cover (C), then remove the front outer seat weight sensor cover (D).

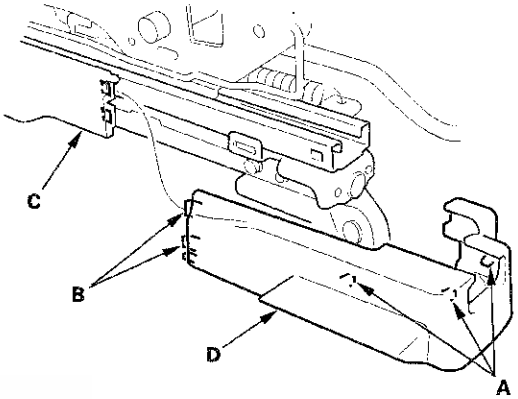

5. Release the tabs (A), then remove the front inner seat weight sensor cover (B).

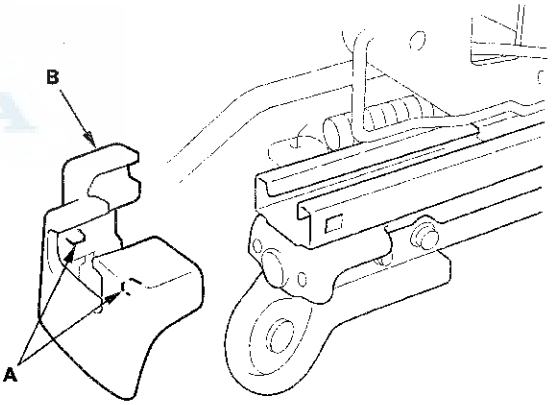

6. Slide the front seat frame forward fully, detach the clips, then remove the rear outer seat weight sensor cover (A) and the rear inner seat weight sensor cover (B) from the back of both seat tracks.

Fastener Locations

▷ : **Clip, 3**

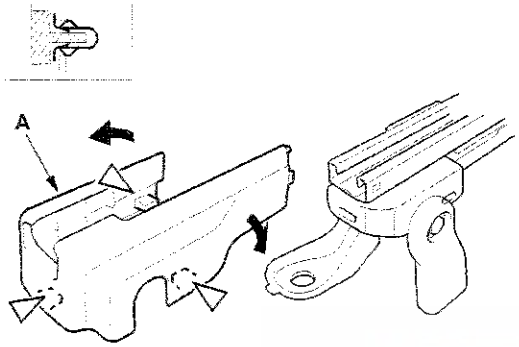

Fastener Locations

▷ : **Clip, 3**

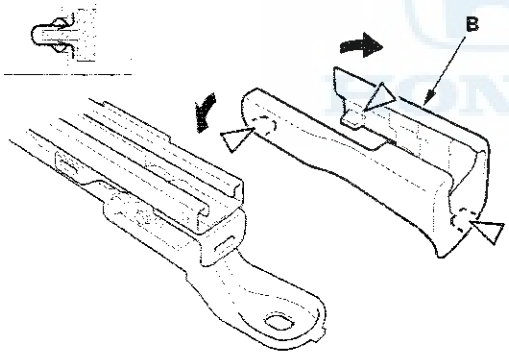

7. Remove the recline inner cover (A) and the center inner cover (B) from the seat frame (C).

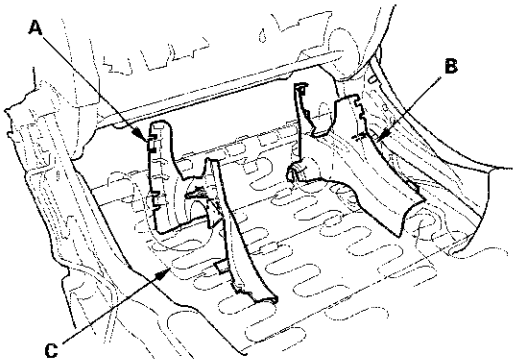

8. Install the new seat frame in the reverse order of removal, and note these items:

- If the clips are damaged, replace them with new ones.
- Push the clips into place securely.

Front Seat Frame Replacement (cont'd)

Special Tools Required
KTC trim tool set SOJATP2014 *
* Available through the Honda Tool and Equipment Program; call 888-424-6857

4-door Passenger's Seat

Calibrate the ODS unit after any of the these actions (see page 24-38):

- Front passenger's seat replacement (including any seat components)
- After a vehicle collision

NOTE:
- Put on gloves to protect your hands.
- Use the appropriate tool from the KTC trim tool set to avoid damage when removing components.
- If the side airbag has deployed, replace the seat frame and related parts with new ones (see page 24-202).

1. Remove the front seat (see page 20-181).

2. Remove these items:

   - Front seat-back cover/pad (see page 20-205)
   - Front seat cushion cover/pad (see page 20-218)
   - ODS unit (see page 24-230)
   - Seat belt buckle (see page 24-10)
   - Side airbag (see page 24-208)

3. Remove the recline inner cover (A) and the center inner cover (B) from the seat frame (C).

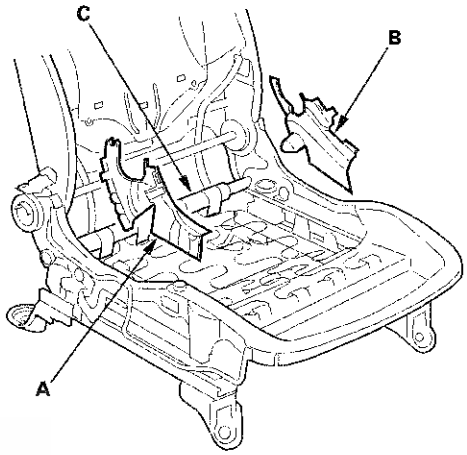

4. Install the new seat frame in the reverse order of removal.

Front Seat-back Cover Replacement

Special Tools Required
KTC trim tool set SOJATP2014 *
* Available through the Honda Tool and Equipment Program; call 888-424-6857

2-door

SRS components are located in this area. Review the SRS component locations (see page 24-21) and the precautions and procedures (see page 24-23) before doing repairs or service.

- Check the operation of the driver's seat position sensor after any of these actions (see page 24-40):
  - Driver's seat position sensor replacement
  - Cover plate (front side of driver's seat slide rail) replacement
- Calibrate the ODS unit after any of the these actions (see page 24-38):
  - Front passenger's seat replacement (including any seat components)
  - Replacement of the seat weight sensors
  - After a vehicle collision

NOTE:
- Put on gloves to protect your hands.
- Take care not to tear the seams of damage the seat covers.
- On the passenger's seat, do not touch the OPDS sensor in the seat-back pad, and keep it away from oil. Oil can corrode the sensor causing it to fail.
- Use the appropriate tool from the KTC trim tool set to avoid damage when removing components.

1. Remove the front seat (see page 20-181).
2. Driver's seat (10-way power seat): Remove the rear seat access knob (A). Remove the screw, then remove the rear seat access trim (B).

Fastener Location
▶ : Screw, 1

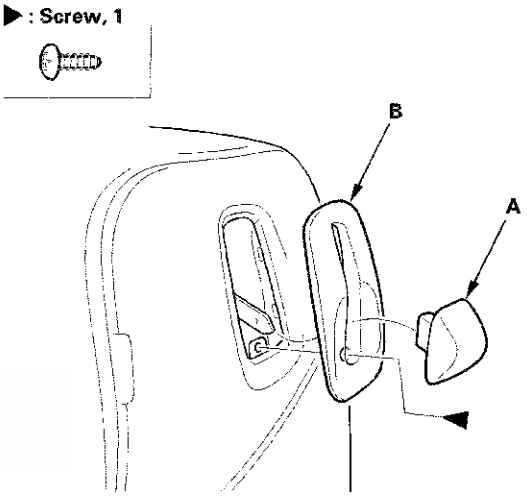

3. From under the seat cushion, release the elastic strap (A) from the seat cushion frame springs (B), then pull the under cover (C) of the back cover back.

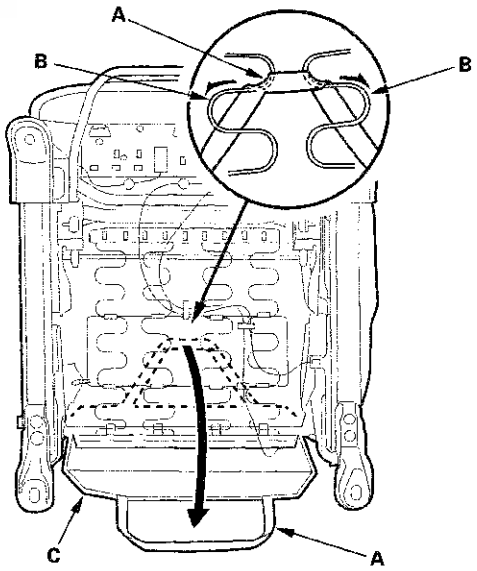

(cont'd)

Front Seat-back Cover Replacement (cont'd)

4. From under the seat cushion, disconnect and/or detach the connector(s):

   - Driver's seat (10-way power seat):
     - Side airbag connector (A)
     - Recline motor harness connector (B)
     - Seat-back heater connector (C)
   - Driver's seat (manual height adjustable seat)/ Passenger's seat: Side airbag connector (D)

Driver's seat (10-way power seat)

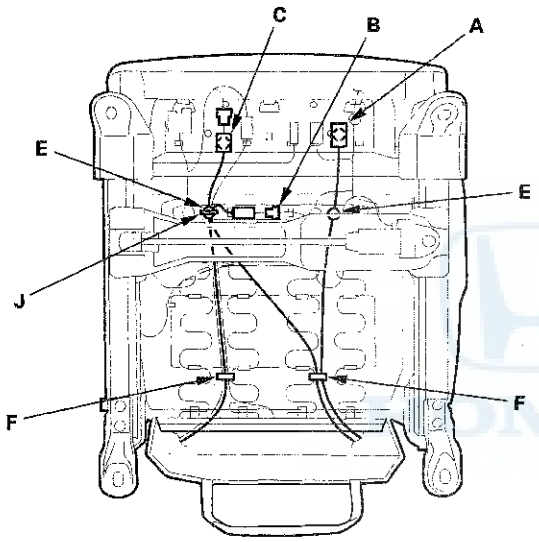

Driver's seat (manual height adjustable seat)

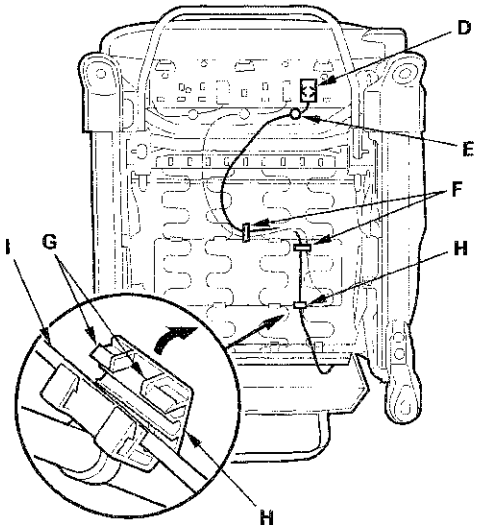

Passenger's seat (manual seat)

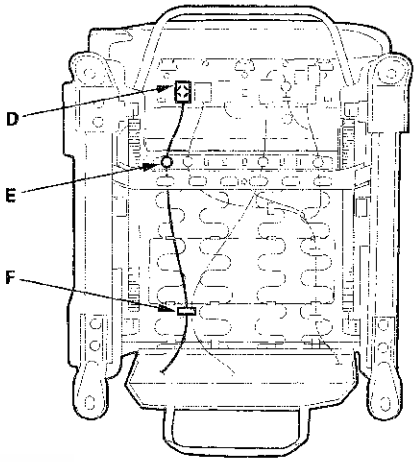

5. Detach the harness clip(s) (E), and remove the wire ties (F). On the manual height adjustable seat, pry up the hooks (G) of the harness holder (H), then release the holder from the seat cushion frame spring (I).

6. Driver's seat (10-way power seat): Release the wire tie (J) of the harness clip fastening the recline motor harness, the seat-back heater harness, and the seat cushion heater harness together.

7. Remove the screws, then gently pull down the back cover (A) to release the hooks (B) from the seat-back frame, and remove the cover.

Fastener Locations

▶ : Screw, 2

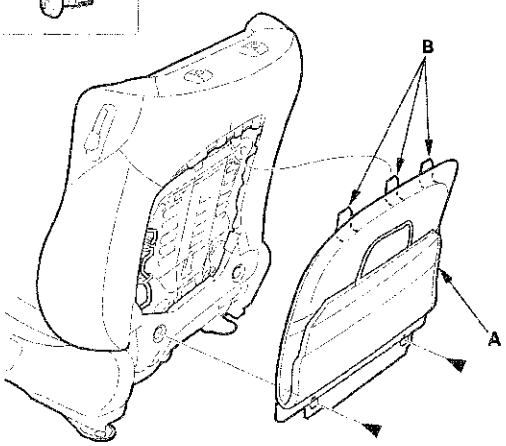

8. Pull the side airbag harness (A) on all types of seats, the recline motor harness (B) and the seat-back heater harness (C) on the driver's 10-way power seat out through the loop(s) (D). Release the Velcro fasteners (E) except on the leather seat cover, the hook strip (F), pull the seat-back cover (G) back, then pull the harness(es) out through the harness hole(s) (H) in the seat-back cover.

Driver's seat (10-way power seat)

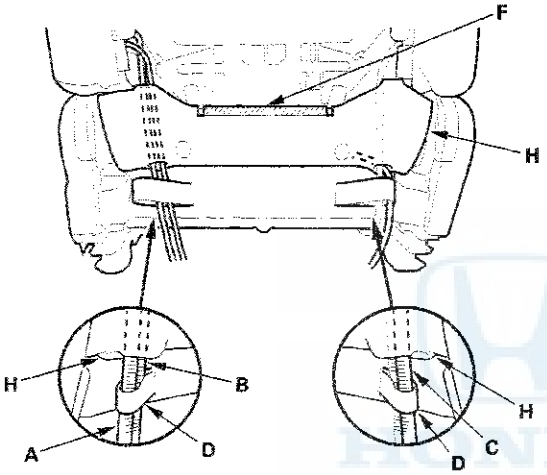

Driver's seat (manual height adjustable seat)

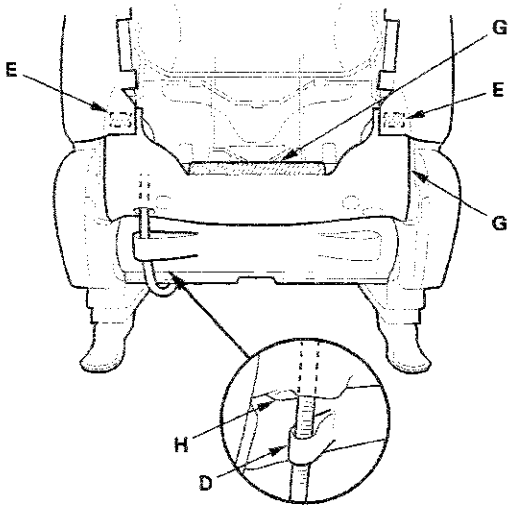

Passenger's seat (manual seat)

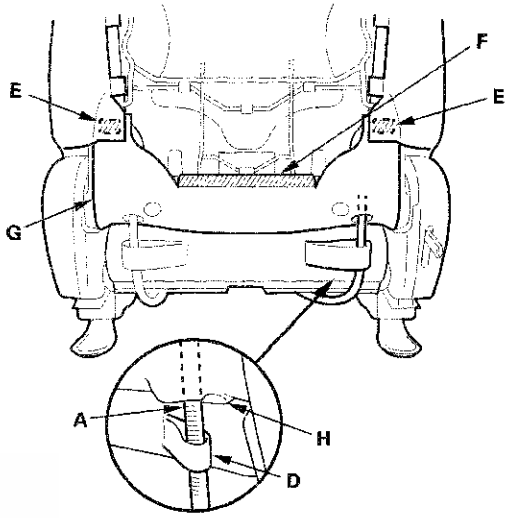

9. Release the hook strips (A), then loosen the seat-back cover (B).

NOTE: The front seat with leather seat cover is shown; the other types of seats are similar.

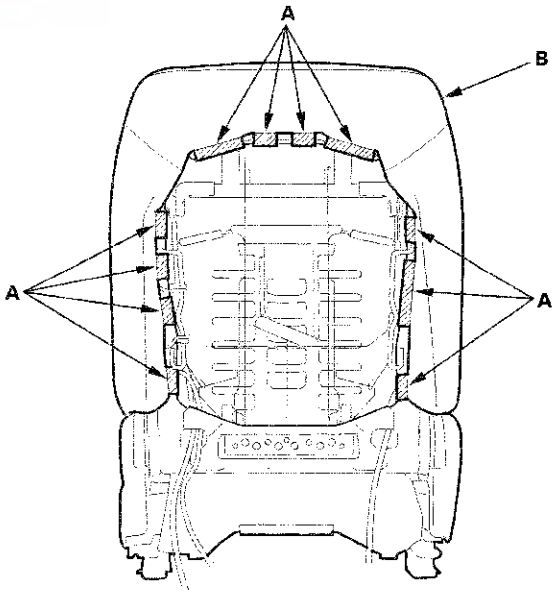

(cont'd)

Front Seat-back Cover Replacement (cont'd)

10. Remove the nut, then release the bracket (A) of airbag wire C from the seat-back frame (B).

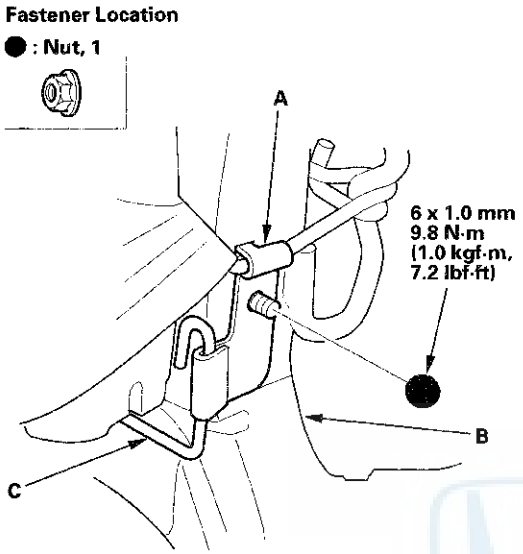

11. Release airbag wire A and airbag wire B from the seat-back frame (C).

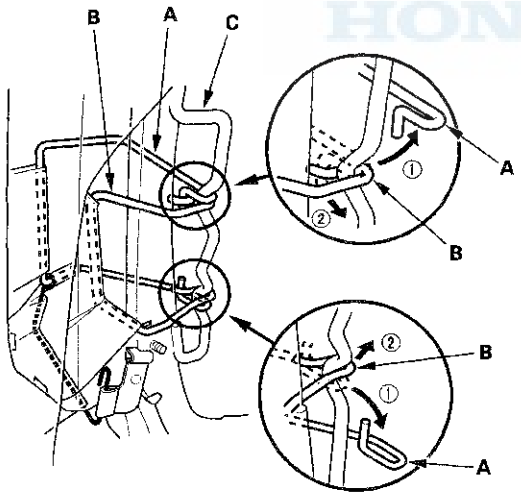

12. Except driver's manual height adjustable seat: Remove the lumbar support motor cover (A) (driver's seat) or the ODS unit cover (B) (passenger's seat).

   -1 Turn over the seat-back cover (C) and the pad (D) as needed.
   -2 Release the cover from the lower hooks (E).
   -3 Pull the cover upward to release it from the upper hook (F).

Driver's seat

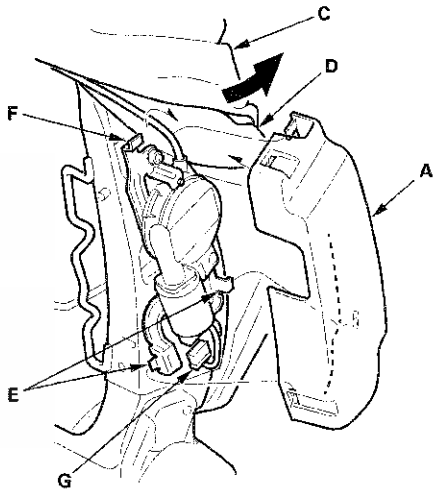

Passenger's seat

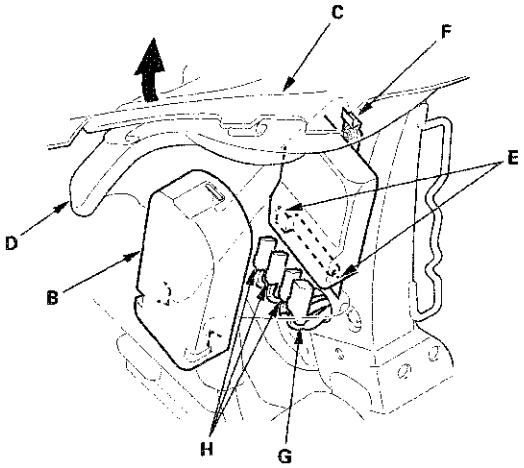

13. Passenger's seat: Disconnect the ODS unit harness connector (G) and the ODS sensor connectors (H) on the passenger's seat.

14. Passenger's seat: Detach the harness clips (A) fastening the OPDS sensor harnesses (B), and release the wire harness from the harness holder (C).

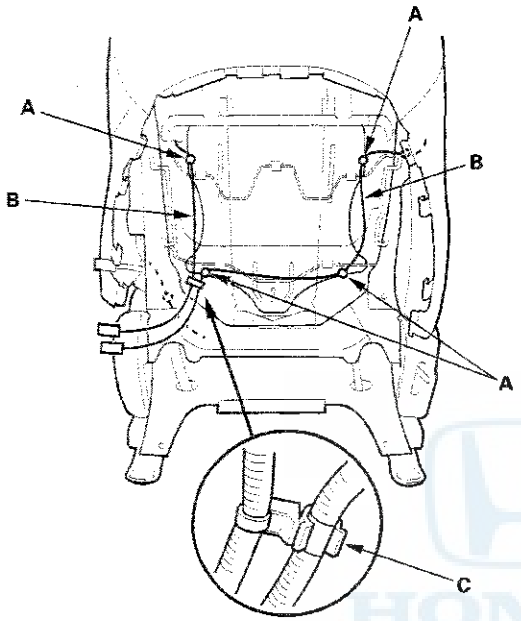

15. Except driver's manual height adjustable seat: Detach the harness clip (A), then pull the seat wire harness (B) in through a hole in the seat frame, and pull it out through the harness hole (C) in the seat-back cover (D). The passenger's seat is shown; the driver's seat is similar.

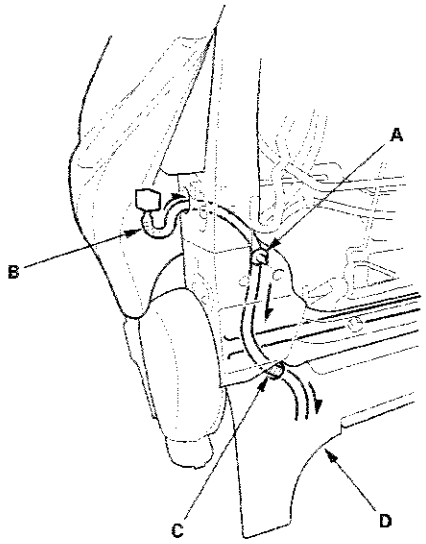

16. Pull out the head restraint guides (A) while pinching the tabs on the end of the guides, and remove them.

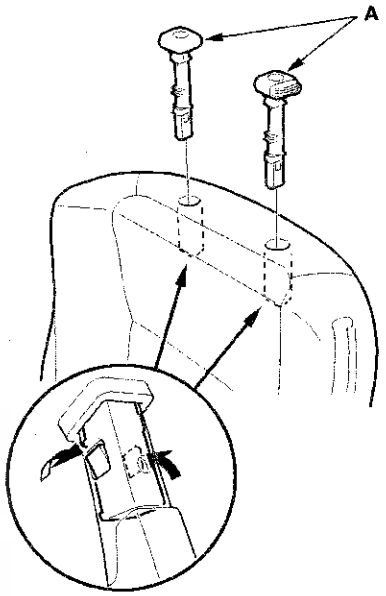

17. Remove the seat-back cover/pad (A) from the seat-back frame (B).

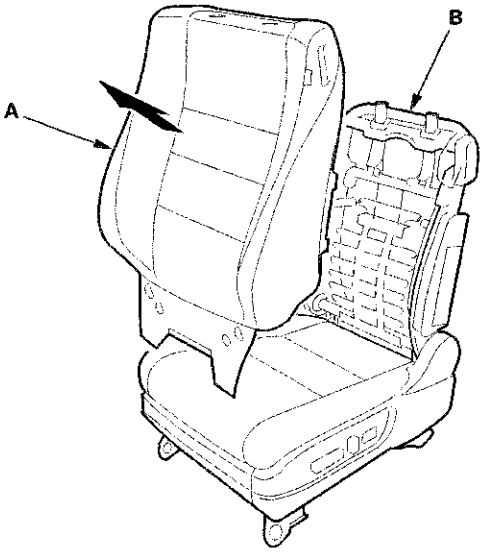

(cont'd)

Front Seat-back Cover Replacement (cont'd)

18. Pull back the edge of the seat-back cover all the way around, and release the upholstery rings (A), then remove the seat-back cover.

    NOTE: The leather seat cover is shown; the other types of seat covers are similar.

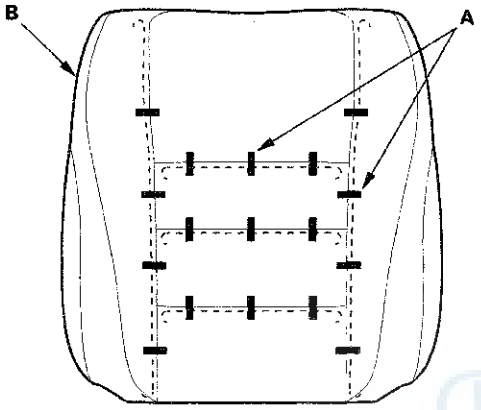

19. Remove airbag wire attachment B from the outside reinforcing cloths (D). Pull airbag attachment wire A out through loops (E) of the inside reinforcing cloths (F) and through loop (G) of airbag attachment wire C. Remove airbag attachment wires A and C.

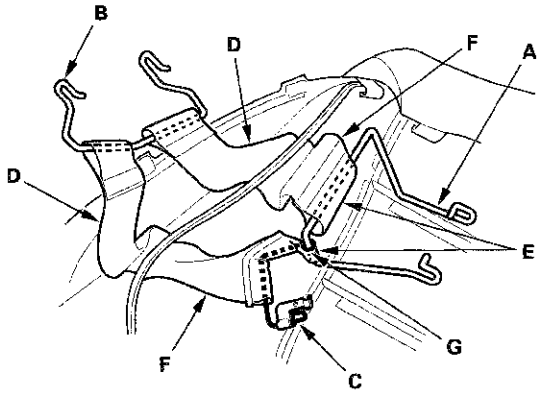

20. Install the cover in the reverse order of removal, and note these items:

    - Reinitialize the ODS unit (see page 24-38).
    - To prevent wrinkles when installing a seat-back cover, make sure the material is stretched evenly over the pad before securing the upholstery rings, the hooks, and the hook strips.
    - Before installing the seat-back cover, make sure the airbag attachment wires (A, B, C) are installed in the reinforcing cloths (D) correctly, and wire A and wire C are securely assembled.
    - Replace all of the upholstery rings (E) fastening the seat cushion cover (F) and pad wires (G) with new ones using commercially available upholstery ring pliers (H).
    - Reinstall airbag attachment wires A and B, and the bracket (I) of airbag attachment wire C securely.
    - Use only original Honda replacement seat-back covers.
    - Make sure the side airbag harness and the seat wire harness are routed properly.

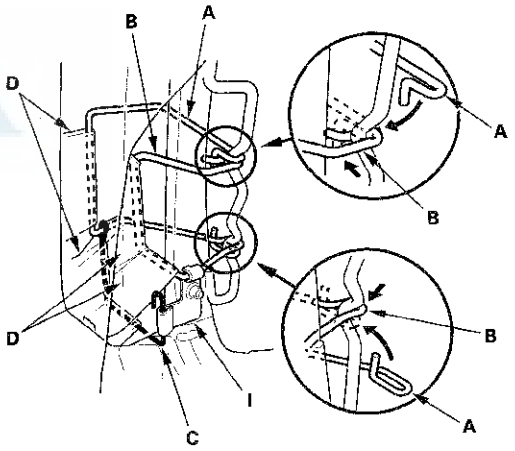

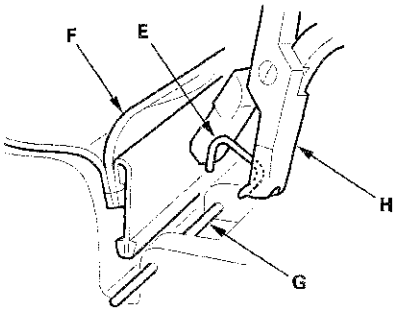

8. Release airbag attachment wire A and airbag attachment wire B from the seat-back frame (C).

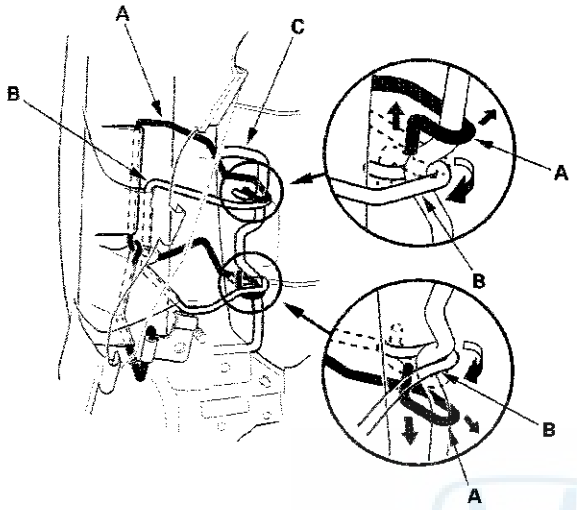

9. Passenger's seat: Remove the ODS unit cover (A).

   1. Turn over the seat-back cover (B) and pad (C) as needed.
   2. Release the cover from the lower hooks (D).
   3. Pull the cover upward to release it from the upper hook (E).

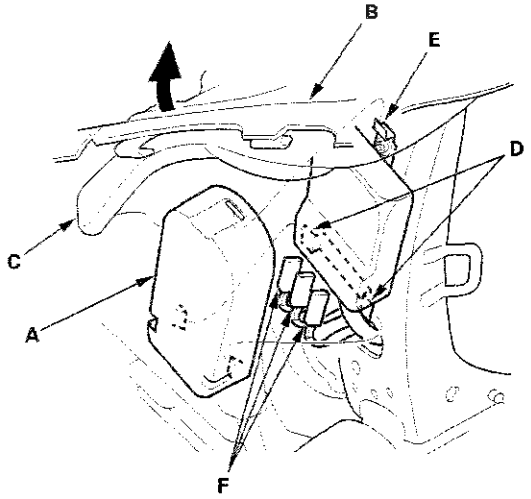

10. Passenger's seat: Disconnect the ODS sensor connectors (F).

11. Passenger's seat: Detach the harness clips (A) fastening the OPDS sensor harnesses (B), and release the wire harness from the harness holder (C).

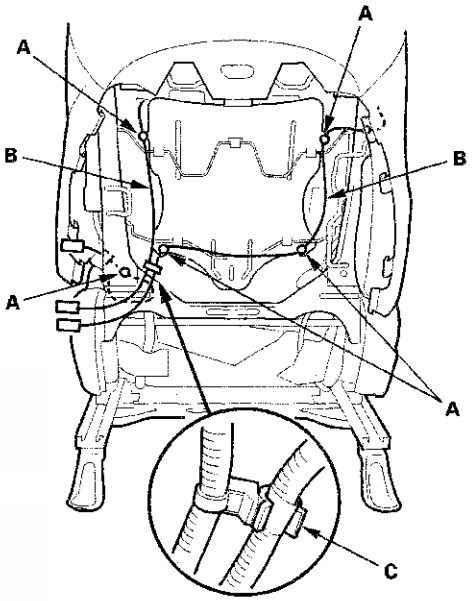

12. Pull out the head restraint guides (A) while pinching the tabs on the end of the guides, and remove them.

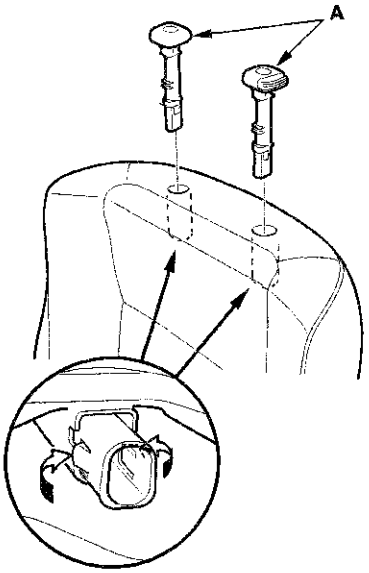

(cont'd)

Front Seat-back Cover Replacement (cont'd)

4. Without back cover: Release the bottom hook (A), and unzip the seat-back cover (B).

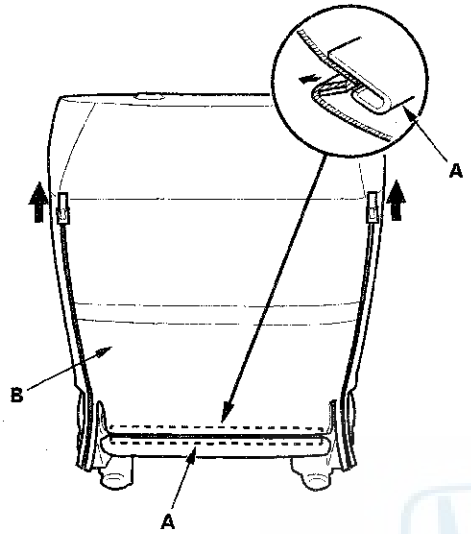

5. Release the Velcro fasteners (A) and the hook strips (B), then loosen the seat-back cover (C).

   NOTE: The front seat with leather seat cover and the back cover is shown; the other types of seats are similar.

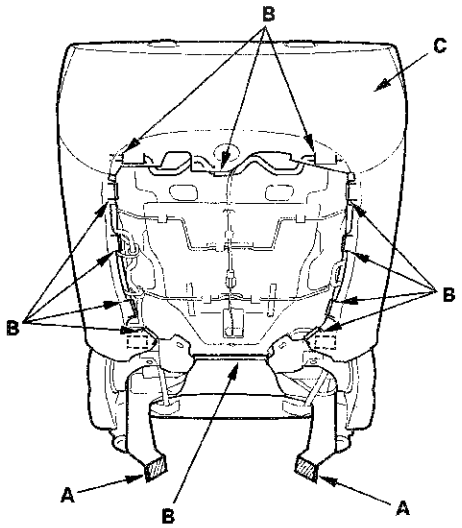

6. Driver's seat with seat heater: Disconnect the seat-back heater connector (A), and detach the harness clip (B).

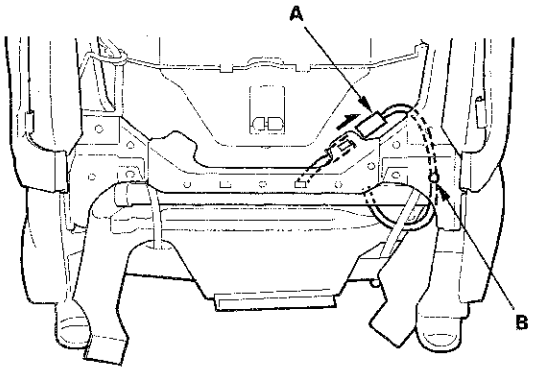

7. Remove the nut, then release the bracket (A) of airbag wire C from the seat-back frame (B).

Fastener Location

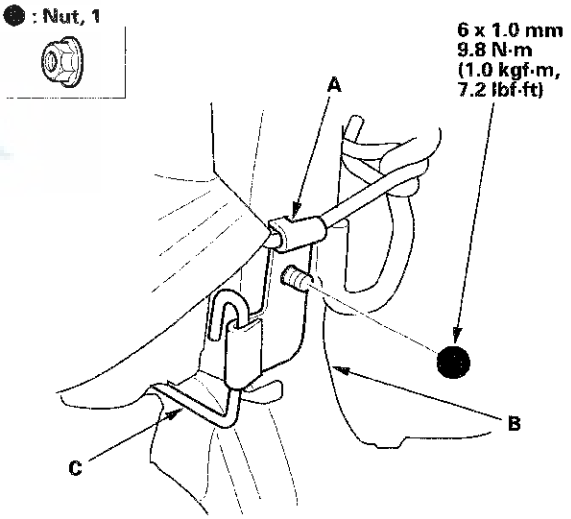

8. Release airbag wire A and airbag wire B from the seat-back frame (C).

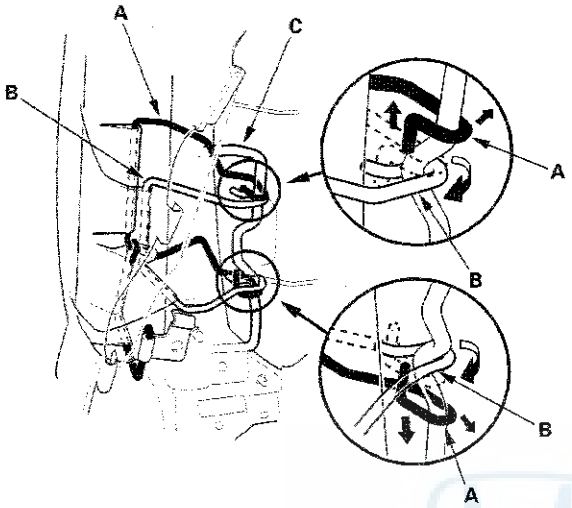

9. Passenger's seat: Remove the ODS unit cover (A).

   1. Turn over the seat-back cover (B) and pad (C) as needed.
   2. Release the cover from the lower hooks (D).
   3. Pull the cover upward to release it from the upper hook (E).

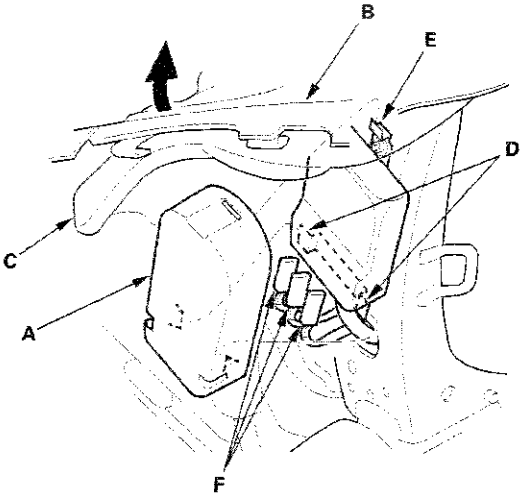

10. Passenger's seat: Disconnect the OPDS sensor connectors (F).

11. Passenger's seat: Detach the harness clips (A) fastening the OPDS sensor harnesses (B), and release the wire harness from the harness holder (C).

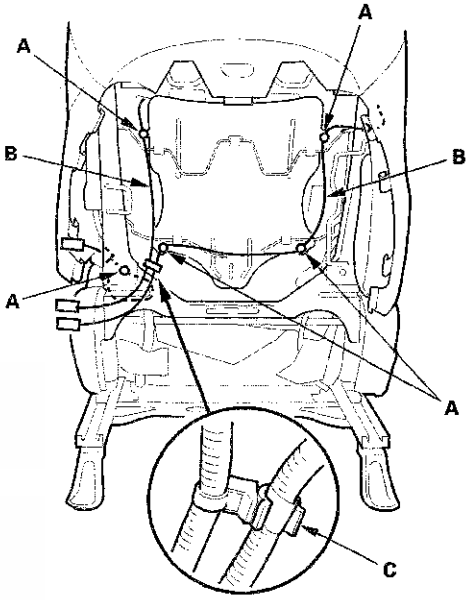

12. Pull out the head restraint guides (A) while pinching the tabs on the end of the guides, and remove them.

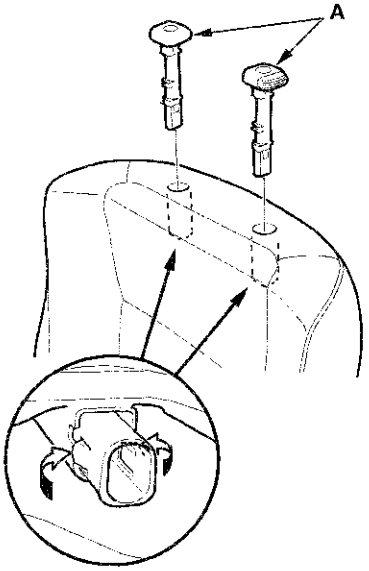

(cont'd)

Front Seat-back Cover Replacement (cont'd)

13. Remove the seat-back cover/pad (A) from the seat-back frame (B).

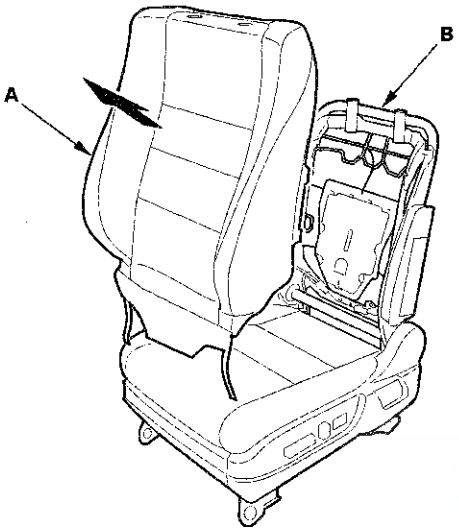

14. Pull back the edge of the seat-back cover all the way around, and release the clips (A), then remove the seat-back cover (B).

NOTE: The leather seat cover is shown; the other types of seat covers are similar.

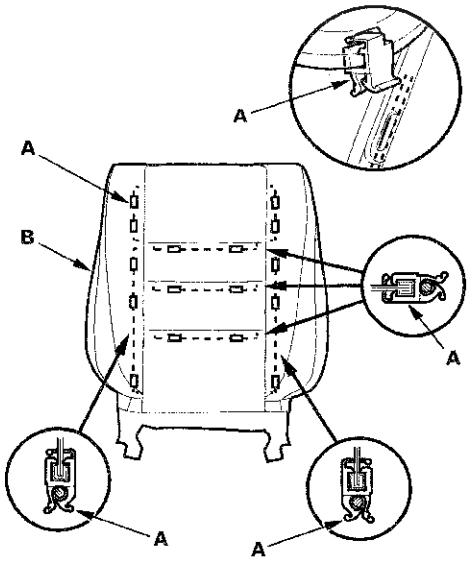

15. Remove airbag attachment wire B from the outside reinforcing cloths (D). Pull airbag attachment wire A out through loops (E) of the inside reinforcing cloths (F) and through loop (G) of airbag attachment wire C . Remove airbag attachment wires A and B.

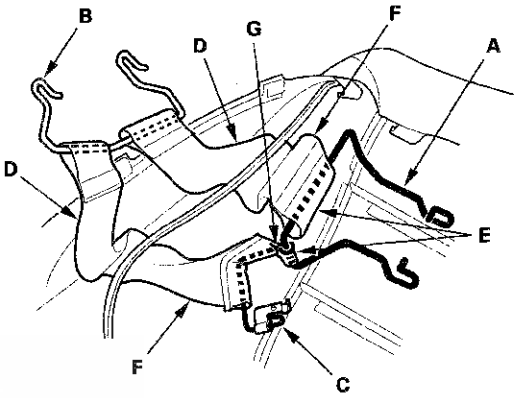

16. Install the cover in the reverse order of removal, and note these items:

- Reinitialize the ODS unit (see page 24-38).
- To prevent wrinkles when installing a seat-back cover, make sure the material is stretched evenly over the pad before securing the clips, the hooks, and the hook strips.
- Before installing the seat-back cover, make sure the airbag attachment wires (A, B, C) are installed in the reinforcing cloths (D) correctly, and wire A and wire C are securely assembled.
- Replace any clips you removed with new ones (E).
- Reinstall airbag attachment wires A and B, and the bracket (F) of airbag attachment wire C securely.
- Use only original Honda replacement seat-back covers.
- Make sure the seat-back heater harness (if equipped), and OPDS sensor harness (passenger's seat) are routed properly.
- Replace the back cover clips with new ones.

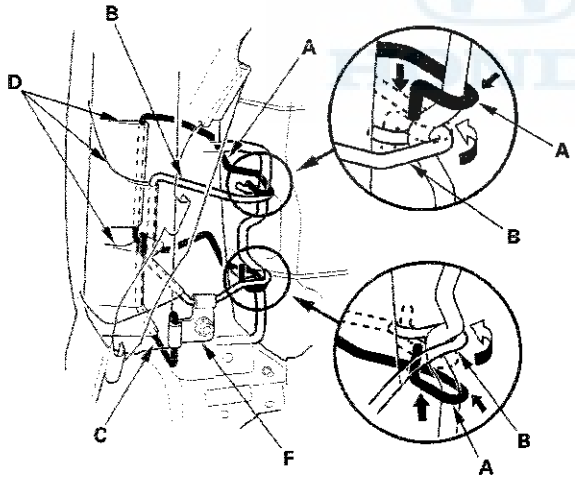

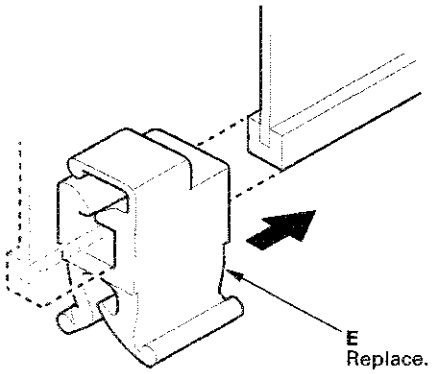

Front Seat Cushion Cover Replacement

Special Tools Required
KTC trim tool set SOJATP2014 *
* Available through the Honda Tool and Equipment Program; call 888-424-6857

2-door

SRS components are located in this area. Review the SRS component locations (see page 24-21) and the precautions and procedures (see page 24-23) before doing repairs or service.

- Check the operation of the driver's seat position sensor after any of these actions (see page 24-40):
  - Driver's seat position sensor replacement
  - Cover plate (front side of driver's seat slide rail) replacement
- Calibrate the ODS unit after any of the these actions (see page 24-38):
  - Front passenger's seat replacement (including any seat components)
  - Replacement of the seat weight sensors
  - After a vehicle collision

NOTE:
- Put on gloves to protect your hands.
- Take care not to tear the seams of damage the seat covers.
- Use the appropriate tool from the KTC trim tool set to avoid damage when removing components.

1. Remove the front seat (see page 20-181).

(cont'd)

Front Seat Cushion Cover Replacement (cont'd)

2. 10-way power seat: Remove the screw, and release the hook (A), tabs (B), and pin (C), then remove the front cover (D).

Fastener Location
▶ : Screw, 1

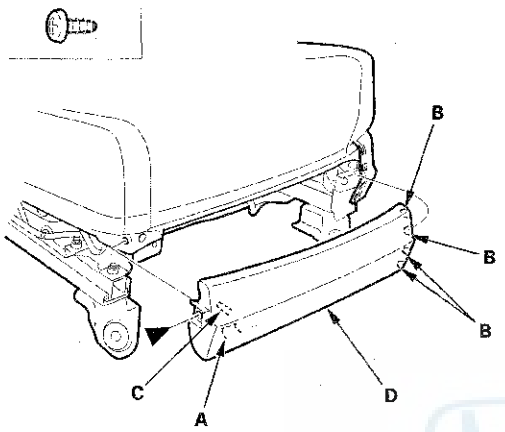

3. 10-way power seat: Remove the recline cover (A).

   -1 Remove the screw, and detach the clip.
   -2 Detach the tabs (B).
   -3 Pull up the cover, then release the hook (C).
   -4 Disconnect the power seat adjustment switch connector (D) and the lumbar support switch connector (E).
   -5 Remove the wire harness (F) from the hooks (G).

Fastener Locations
▶ : Screw, 1 ▷ : Clip, 1

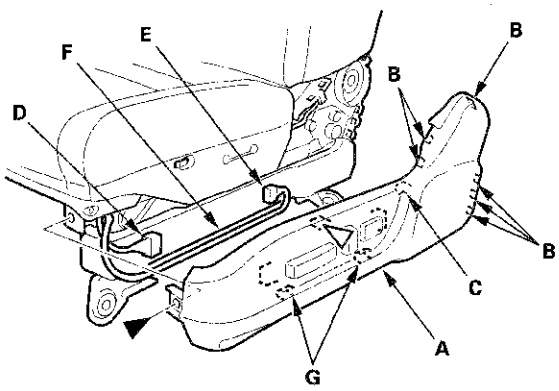

4. Manual height adjustable seat: Pull back the cap (A) to release the hooks (B), and remove the screws, then remove the height handle (C).

Fastener Locations
▶ : Screw, 2

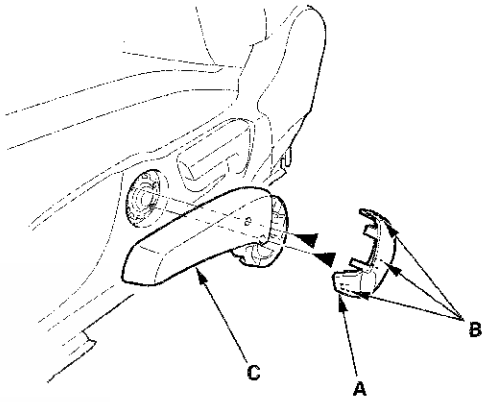

5. Manual height adjustable seat: Remove the recline cover (A).

   -1 Remove the recline knob (B) and screw.
   -2 Gently pull out the cover to detach the clip, and release the hooks (C, D) and the tabs (E).

Fastener Locations
▶ : Screw, 1 ▷ : Clip, 1

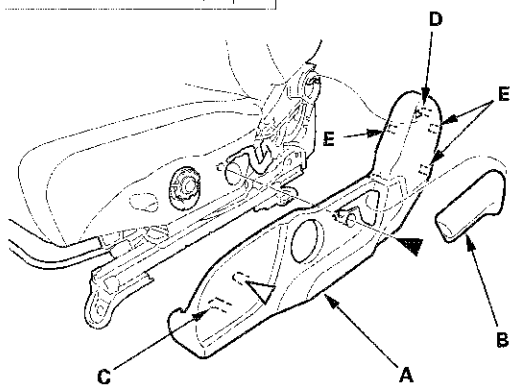

6. Manual seat: Remove the screws, then remove the rear seat access knob (A).

Fastener Location

▶ : **Screw, 1**

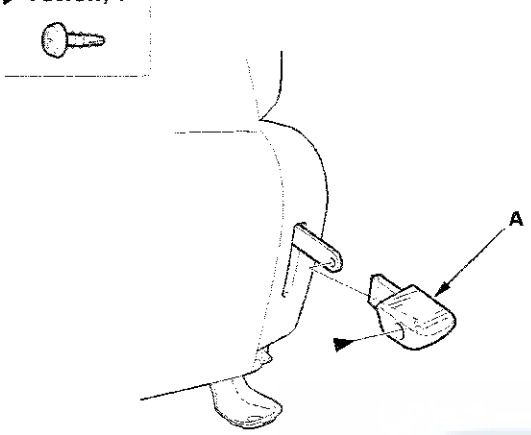

7. Manual seat: Remove the recline cover (A).

   -1 Remove the recline knob (B) and screw.
   -2 Gently pull out the cover, then detach the clips, and release the hooks (C) of the recline inner cover (D).
   -3 Release the rear seat access lever (E).

Fastener Locations

▶ : **Screw, 1** ▷ : **Clip, 4**

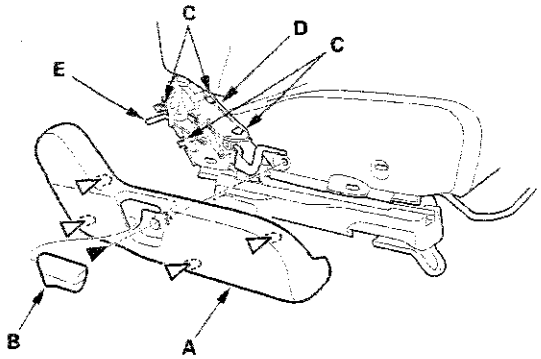

8. 10-way power seat: Remove the center cover (A).

   -1 Remove the screw.
   -2 Detach the tabs (B), then remove the center cover.

Fastener Location

▶ : **Screw, 1**

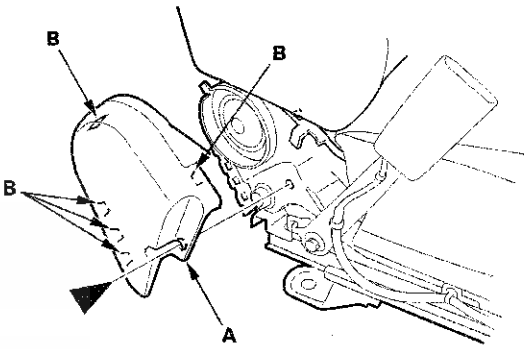

(cont'd)

Front Seat Cushion Cover Replacement (cont'd)

9. Manual height adjustable seat: Gently pull out the center cover (A) to detach the clip, and release the hooks (B) of the center inner cover (C), release the hook (D), then remove the cover.

Fastener Location

▷ : **Clip, 1**

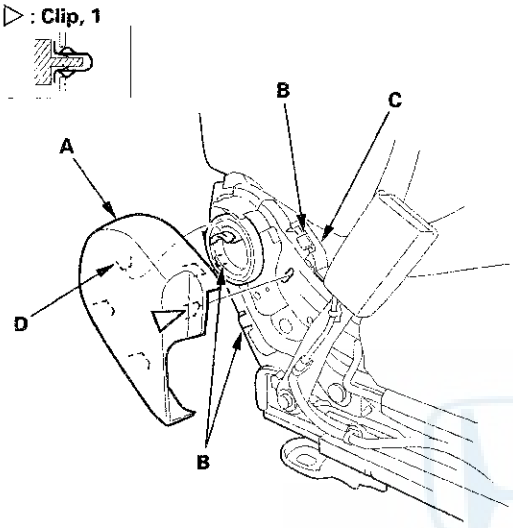

10. Manual seat: Gently pull out the center cover (A) to detach the clip, and release the hooks (B) of the center inner cover (C), then remove the cover.

Fastener Location

▷ : **Clip, 1**

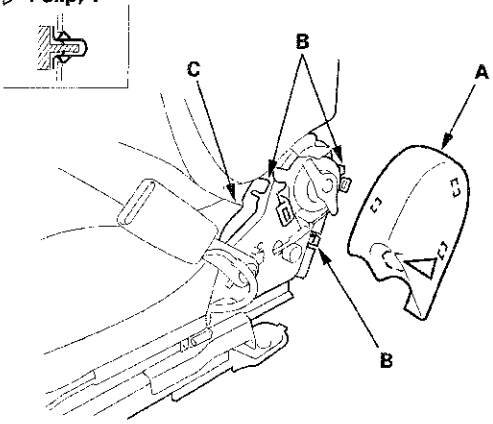

11. From under the seat cushion, release the elastic strap (A) from the seat cushion frame springs (B), then pull the under cover (C) of the back cover back.

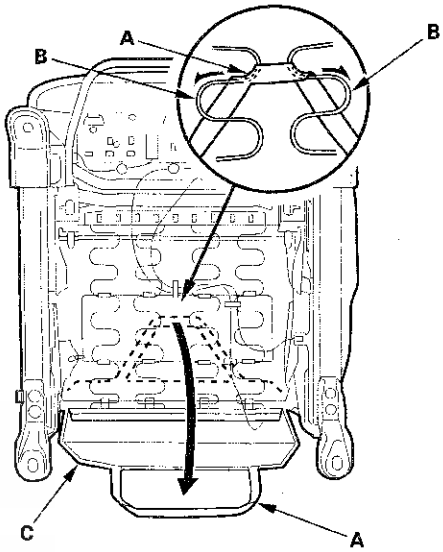

12. From under the seat cushion, disconnect and/or detach the connector(s):

- Driver's seat (10-way power seat):
  - Side airbag connector (A)
  - Recline motor harness connector (B)
  - Seat-back heater connector (C)
  - Seat cushion heater connector (D)
- Driver's seat (manual height adjustable seat): Side airbag connector (E)
- Passenger's seat:
  - Side airbag connector (F)
  - Seat cushion heater connector (G) (for some models)

Driver's seat (10-way power seat)

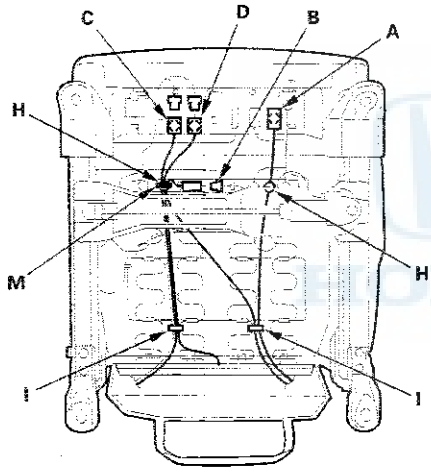

Driver's seat (manual height adjustable seat)

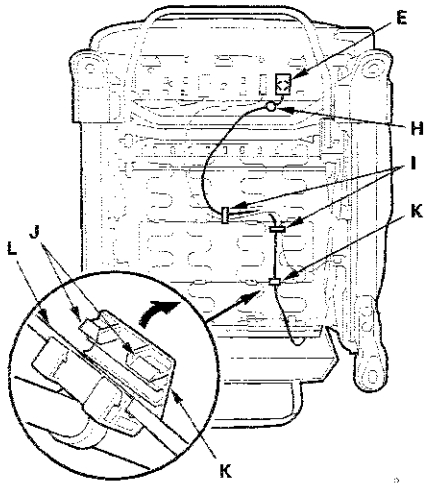

Passenger's seat (manual seat)

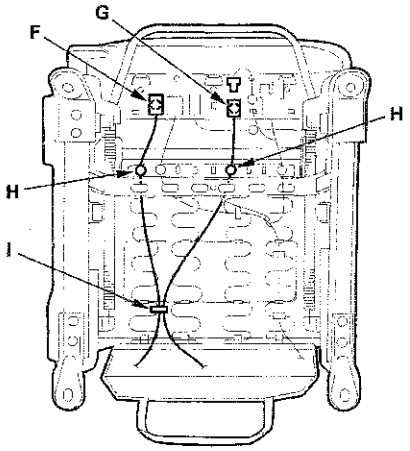

13. Detach the harness clip(s) (H) and remove the wire ties (I). On the manual height adjustable seat, pry up the hooks (J) of the harness holder (K), then release the holder from the seat cushion frame spring (L).

14. Driver's seat (10-way power seat): Release the wire tie (M) of the harness clip fastening the recline motor harness, the seat-back heater harness, and the seat cushion heater harness together.

15. Except driver's manual height adjustable seat: Remove the screws, then gently pull down the cover to release the hooks (B) from the seat-back frame, and remove the cover.

Fastener Locations

▶ : Screw, 2

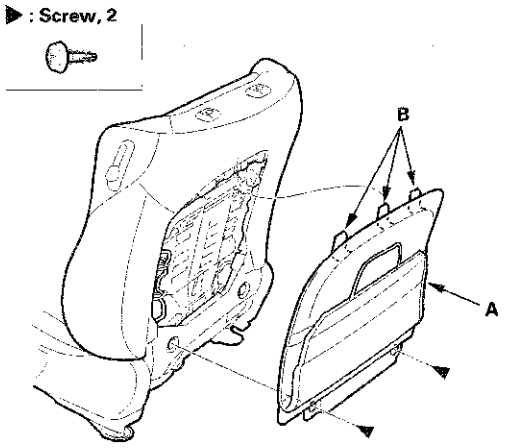

(cont'd)

Front Seat Cushion Cover Replacement (cont'd)

16. Except driver's manual height adjustable seat: Release the lower and inside hook strips (A). The driver's seat is shown; the passenger's seat is similar.

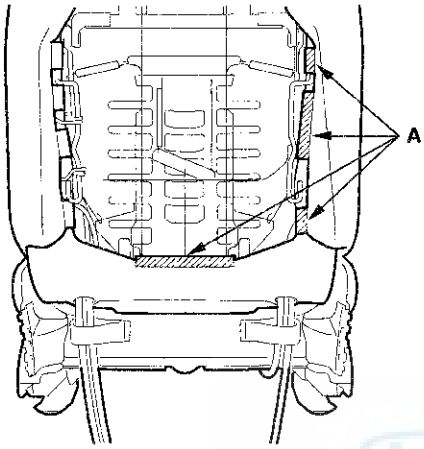

17. Except driver's manual height adjustable seat: Remove the lumbar support motor cover (A) (driver's seat) or the ODS unit cover (B) (passenger's seat).

    1. Turn over the seat-back cover (C) and the pad (D) as needed.
    2. Release the cover from the lower hooks (E).
    3. Pull the cover upward to release it from the upper hook (F).

Driver's seat

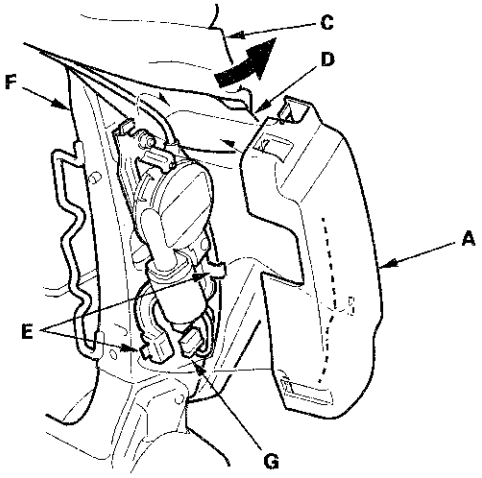

Passenger's seat

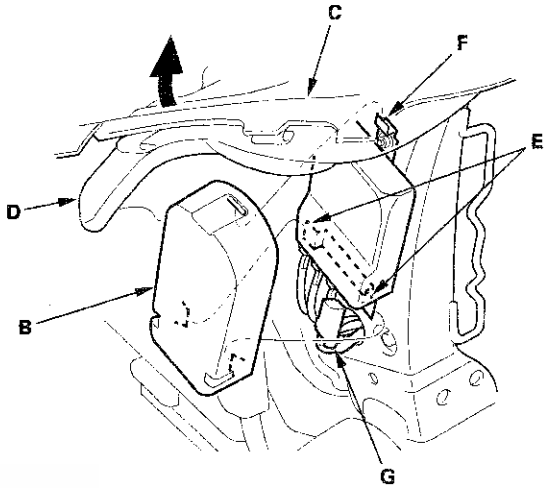

18. Passenger's seat: Disconnect the seat wire harness connector (G).

19. Except driver's manual height adjustable seat: Detach the harness clip (A), then pull the seat wire harness (B) in through a hole in the seat frame, and pull it out through the harness hole (C) in the seat-back cover (D). The passenger's seat is shown; the driver's seat is similar.

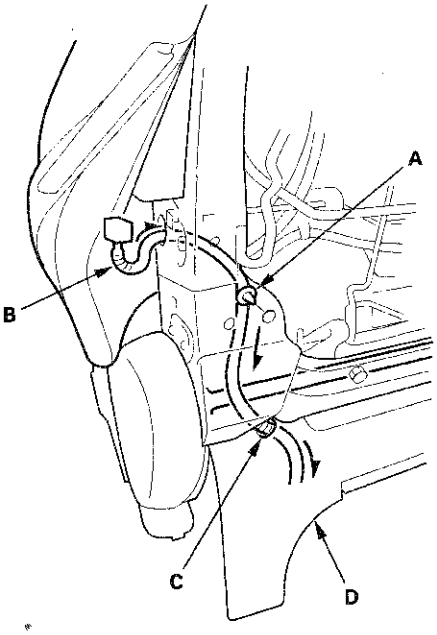

20. Pull the side airbag harness (A) on all types of seats, the recline motor harness (B), the seat wire harness (C), and the seat-back heater harness (D) on the driver's 10-way power seat, and pull the seat wire harness (E) on the passenger's seat out through the loop(s) (F).

Driver's seat (10-way power seat)

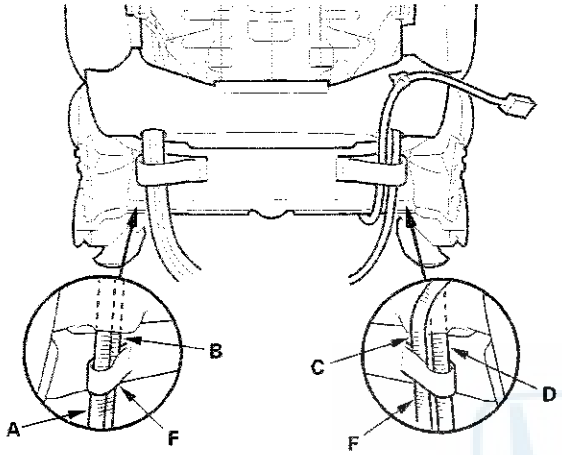

Driver's seat (manual height adjustable seat)

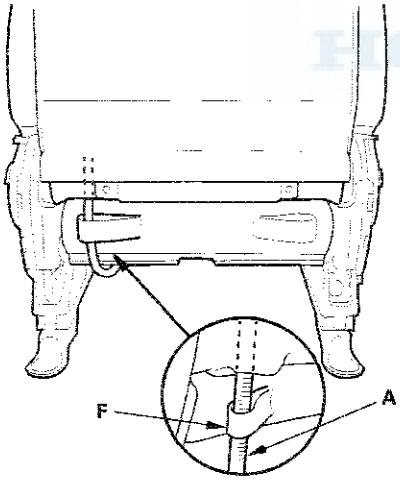

Passenger's seat (manual seat)

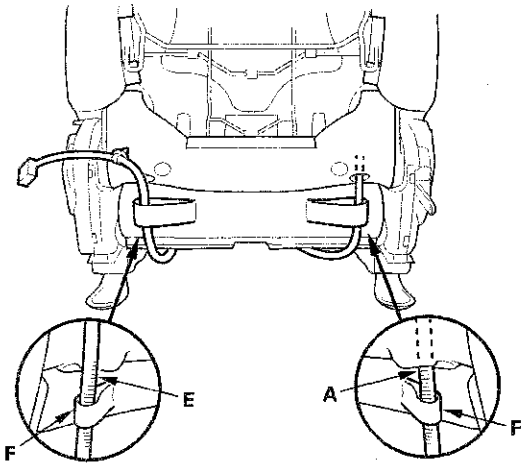

(cont'd)

Front Seat Cushion Cover Replacement (cont'd)

21. Release the hook strips (A) from both sides of the seat cushion frame.

Driver's seat (10-way power seat/manual height adjustable seat)

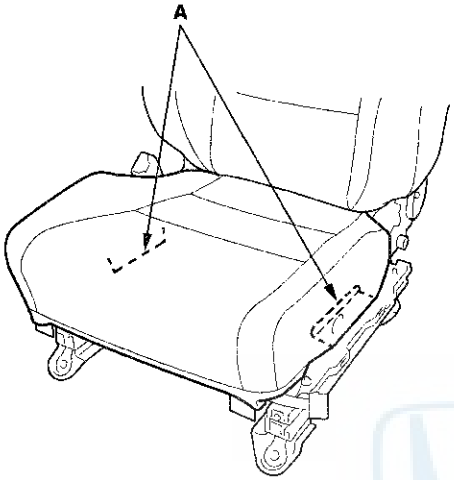

Passenger's seat (manual seat)

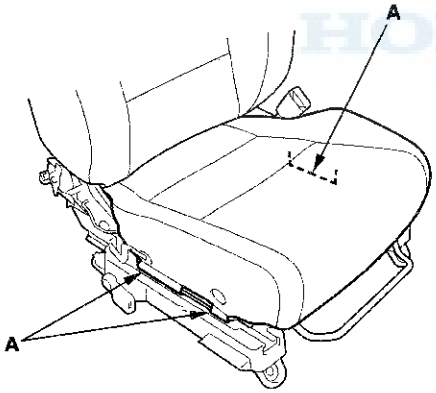

22. Release the hook strips (A) from under the seat cushion. The manual height adjustable seat is shown; the other types of seats are similar.

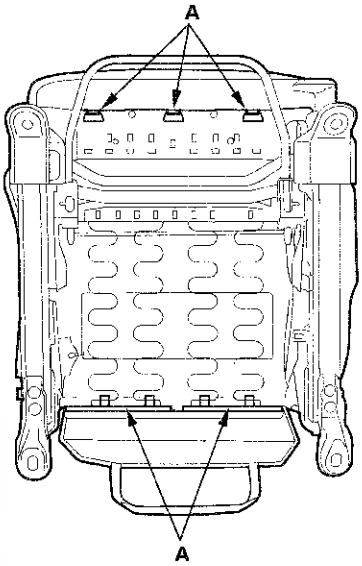

23. Remove the seat cushion cover/pad (A) from the seat frame (B).

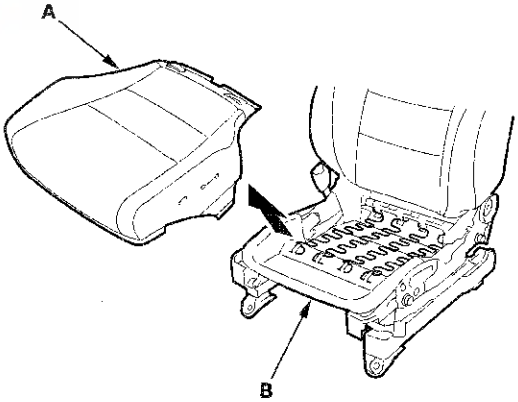

24. Release the upholstery rings (A) from under the seat cushion (B).

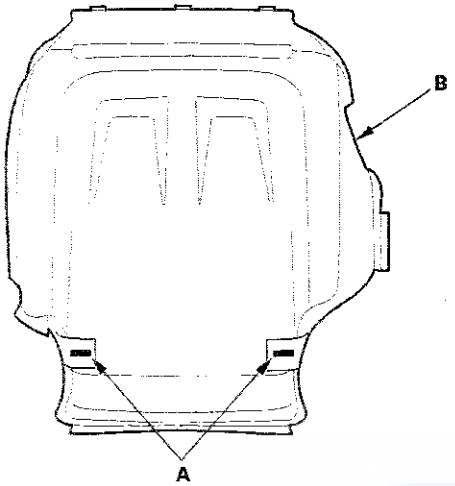

25. Pull back the edge of the seat cushion cover all the way around, and release the upholstery rings (A), then remove the seat cushion cover (B).

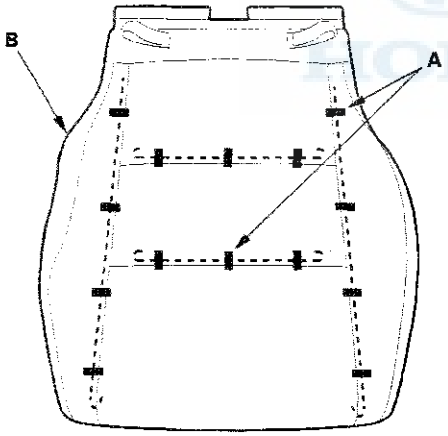

26. Install the cover in the reverse order of removal, and note these items:

- To prevent wrinkles when installing a seat cushion cover, make sure the material is stretched evenly over the pad before securing the upholstery rings and hook strips.
- Replace all of the upholstery rings (A) fastening the seat cushion cover (B) and pad wire (C) with new ones using commercially available upholstery ring pliers (D).

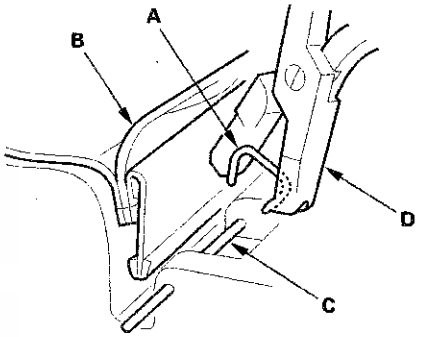

Front Seat Cushion Cover Replacement (cont'd)

Special Tools Required
KTC trim tool set SOJATP2014 *
* Available through the Honda Tool and Equipment Program; call 888-424-6857

4-door

SRS components are located in this area. Review the SRS component locations (see page 24-19) and the precautions and procedures (see page 24-23) before doing repairs or service.

- Check the operation of the driver's seat position sensor after any of these actions (see page 24-40):
  - Driver's seat position sensor replacement
  - Cover plate (front side of driver's seat slide rail) replacement
- Calibrate the ODS unit after any of the these actions (see page 24-38):
  - Front passenger's seat replacement (including any seat components)
  - Replacement of the seat weight sensors
  - After a vehicle collision

NOTE:
- Put on gloves to protect your hands.
- Take care not to tear the seams of damage the seat covers.
- Use the appropriate tool from the KTC trim tool set to avoid damage when removing components.

1. Remove the front seat (see page 20-181).

2. 10-way power seat: Remove the screw, and release the hooks (A), tabs (B), and pin (C), then remove the front cover (D).

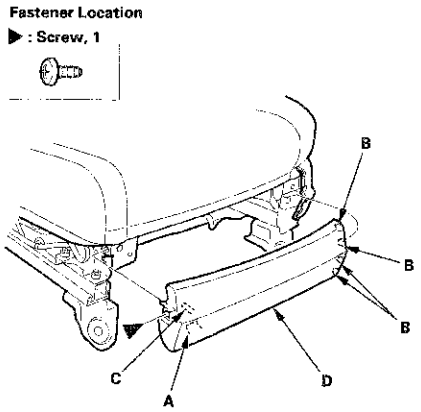

3. 10-way power seat: Remove the recline cover (A).
   - 1 Remove the screw, and detach the clip.
   - 2 Detach the tabs (B).
   - 3 Pull up the cover, then release the hook (C) and the tab (D).
   - 4 Remove the upper recline inner cover (E).
   - 5 Disconnect the power seat adjustment switch connector (F) and the lumbar support switch connector (G).
   - 6 Remove the wire harness (H) from the hooks (I).

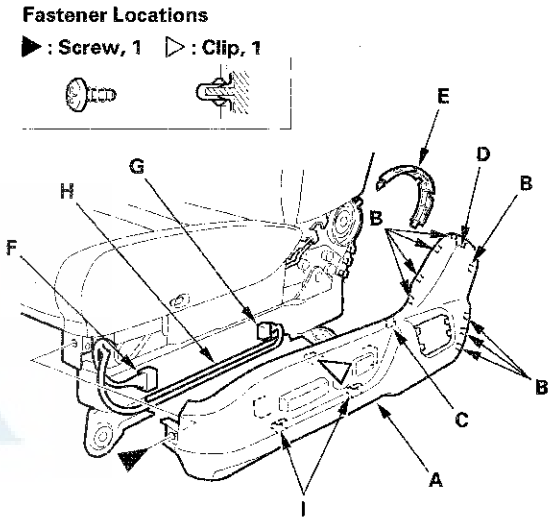

4. Manual height adjustable seat: Pull back the cap (A) to release the hooks (B), and remove the screws, then remove the height adjuster handle (C).

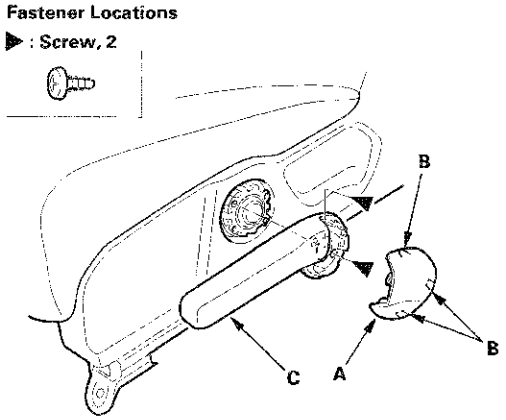

5. Manual height adjustable seat: Remove the recline cover (A).

   -1 Remove the recline knob (B) and screw.
   -2 Gently pull out the cover, then detach the clip, and release the hooks (C, D) and tabs (E).

Fastener Locations

▶ : Screw, 1 ▷ : Clip, 1

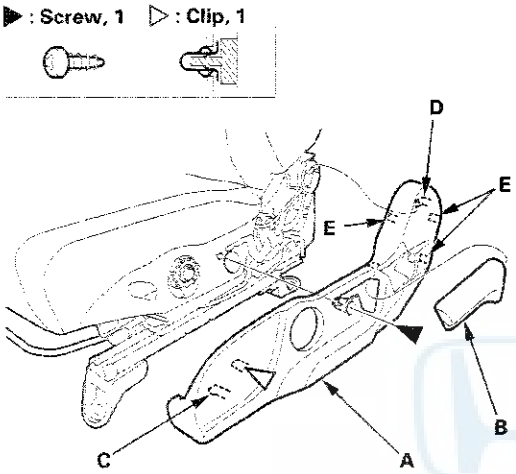

6. Manual seat: Remove the recline cover (A).

   -1 Remove the recline knob (B) and screw.
   -2 Gently pull out the cover, then detach the clip and hook (C), and release the tabs (D).

Fastener Locations

▶ : Screw, 1 ▷ : Clip, 1

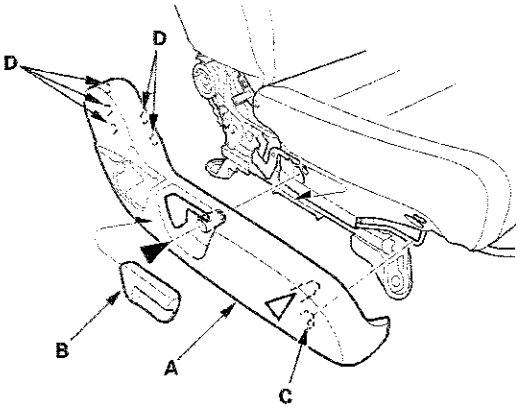

7. 10-way power seat: Remove the center cover (A).

   -1 Remove the screw.
   -2 Detach the tabs (B).
   -3 Pull up the cover, then release the tab (C).

Fastener Location

▶ : Screw, 1

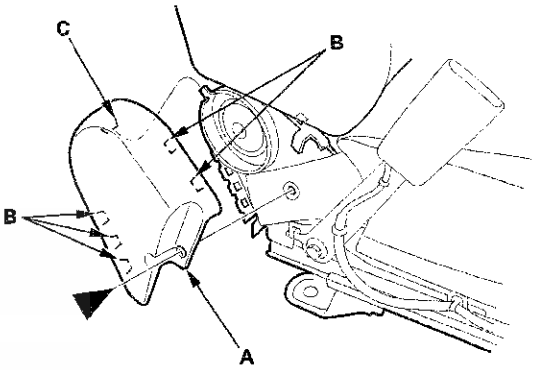

8. Manual height adjustable seat/manual seat: Gently pull out the center cover (A) to detach the clip, and release the tabs (B), then remove the cover. The manual seat is shown; the manual height adjustable seat is similar.

Fastener Location

▷ : Clip, 1

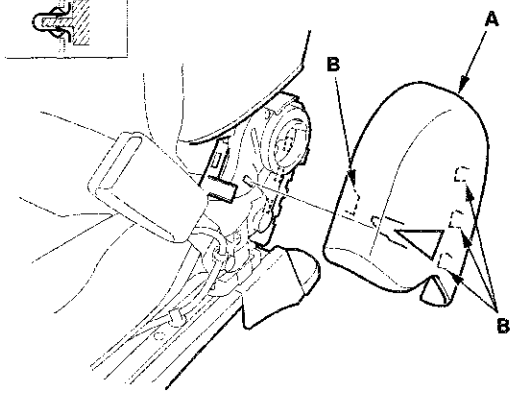

(cont'd)

Front Seat Cushion Cover Replacement (cont'd)

9. With back cover: From under the seat cushion, release the elastic strap (A) from the seat cushion frame springs (B), then pull the under cover (C) of the back cover back.

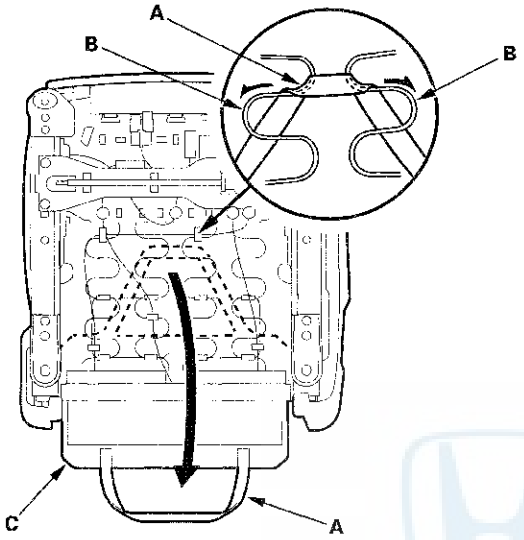

10. With seat heater: Disconnect the seat-back heater connector (A) and detach the harness clip (B). Pry up the hooks (C) of the harness holder (D), then release the holder from the seat cushion frame spring (E).

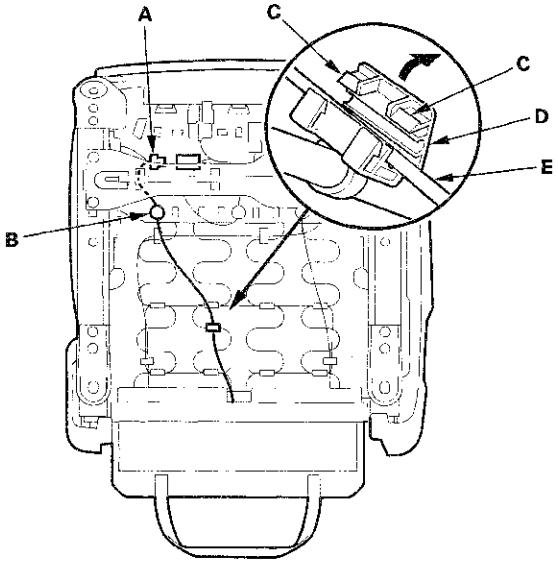

11. Release the Velcro fasteners (A), then pull back the harness holder covers (B) fastening the side airbag harness (C) and the seat wire harness (D) (except driver's manual height adjustable seat).

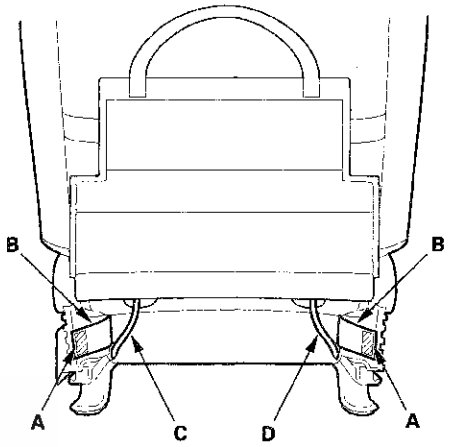

12. 10-way power seat: Gently pull out the center inner cover (A) as needed, and release the seat cushion cover (B) from the seat cushion frame (C).

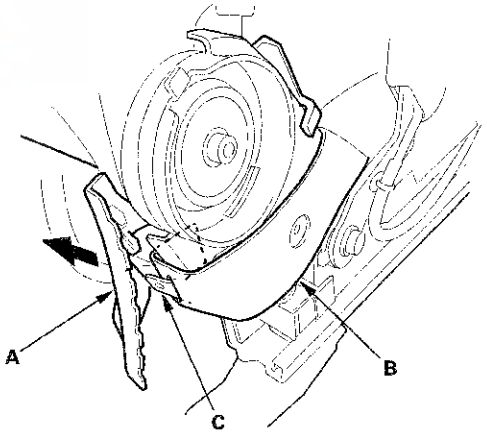

13. 10-way power seat: Release the hook strips (A) from both sides of the seat cushion frame.

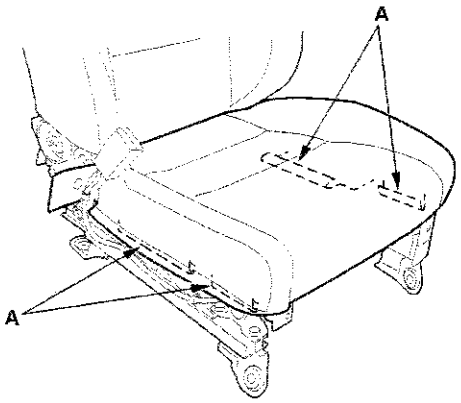

14. Manual height adjustable seat/manual seat: Remove the clip, and release hook strips (A) from both sides of the seat cushion frame. The manual seat is shown; the manual height adjustable seat is similar.

Fastener Location

▷ : **Clip, 1**

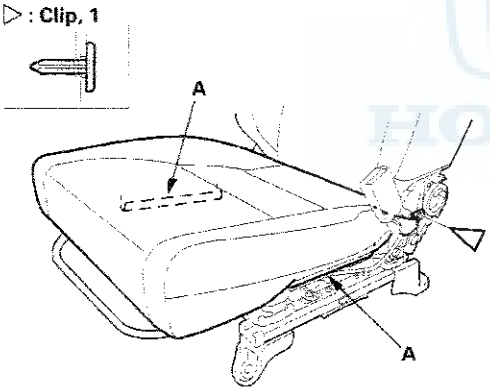

15. Release the hook strips (A) from under the seat cushion.

10-way power seat

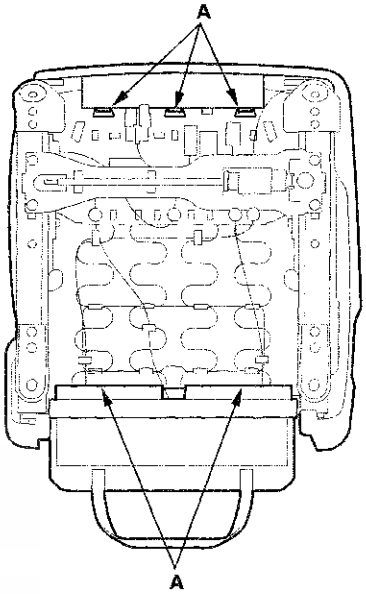

Manual height adjustable seat/manual seat

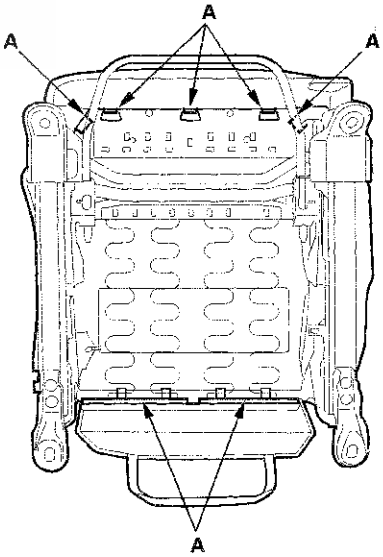

(cont'd)

Front Seat Cushion Cover Replacement (cont'd)

16. Remove the seat cushion cover/pad (A) from the seat frame (B).

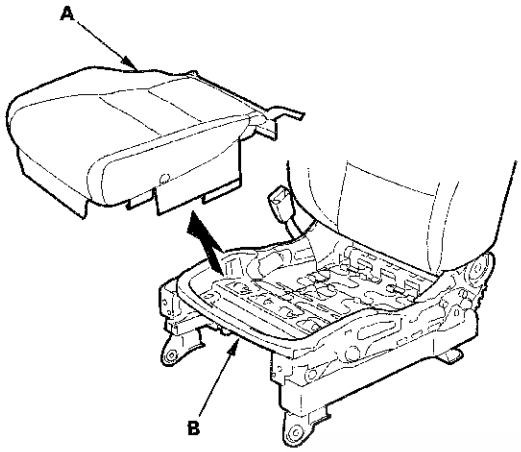

17. Release the hooks (A) from under the seat cushion (B).

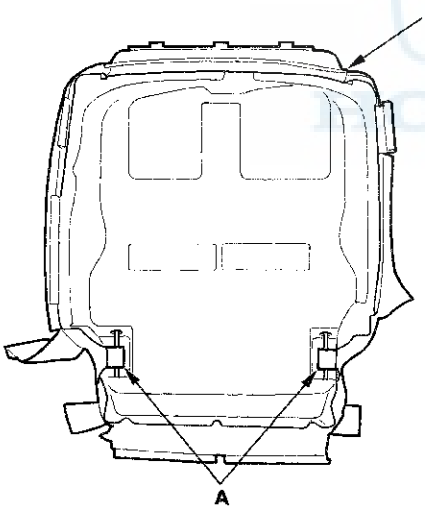

18. Pull back the edge of the seat cushion cover all the way around, and release the clips (A), then remove the seat cushion cover (B).

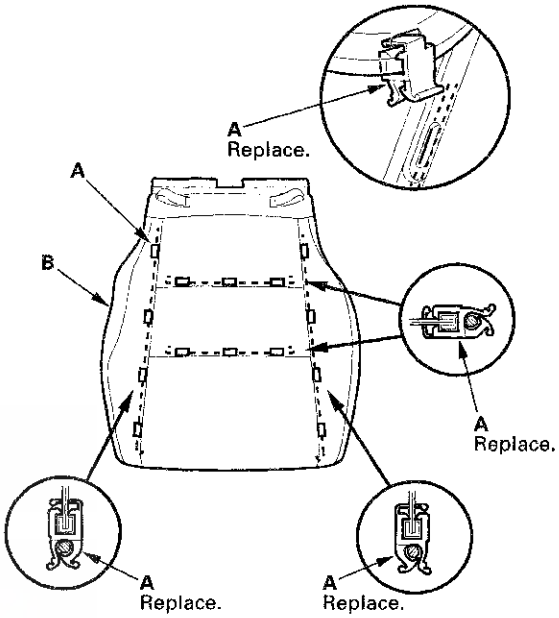

19. Install the cover in the reverse order of removal, and note these items:

- To prevent wrinkles when installing a seat-back cover, make sure the material is stretched evenly over the pad before securing the clips, the hooks, and the hook strips.
- Replace any clips (A) you removed with new ones.

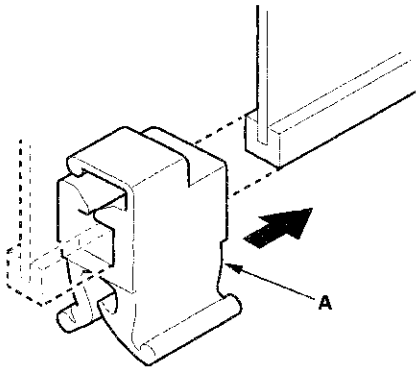

Rear Seat Removal/Installation

Seat-back

NOTE: Take care not to scratch the body or tear the seat covers.

1. Fold the rear seat-back down.

2. Detach the clip that secure the spare tire lid (A) and the seat-back cover (B) to the body. 2-door is shown; 4-door is similar.

Fastener Location

▷ : **Clip, 1**

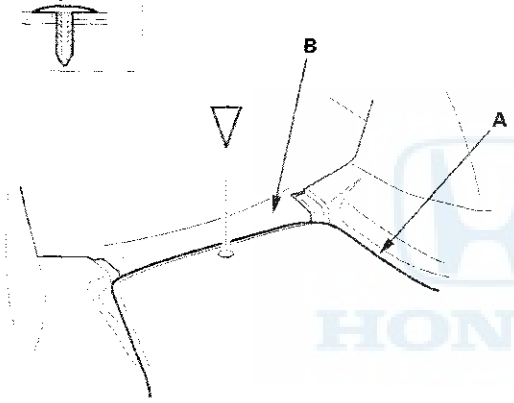

3. Remove the seat-back (A).

   -1 Pull the rear center seat belt (B) out through the slit (C) in the seat belt guide (D).
   -2 2-door: Pull the seat-back cover (E) out from between the seat-back and the trunk side trim panels (F), then remove the bolts.
   -3 4-door: Release the Velcro fasteners (G), and pull back the seat-back cover (H), then remove the bolts.
   -4 Release the hooks (I) of the pivot brackets (J).

2-door

Fastener Locations

▶ : **Bolt, 2**

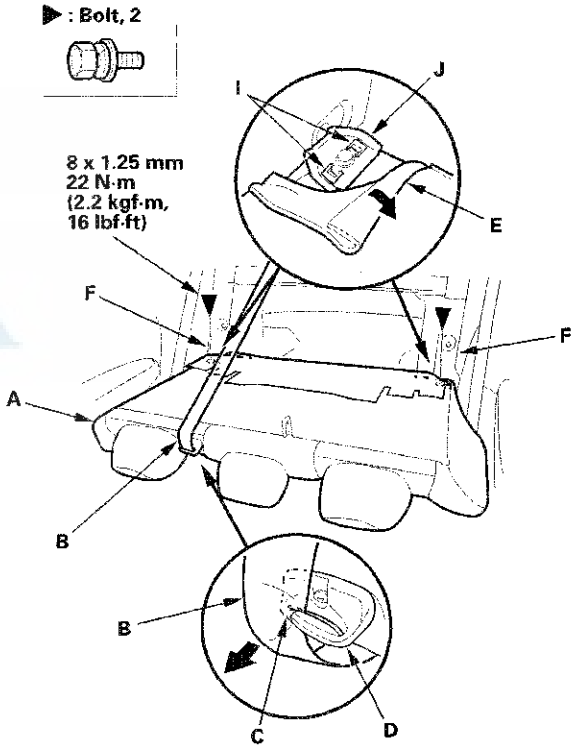

(cont'd)

Rear Seat Removal/Installation (cont'd)

4-door

Fastener Locations

▶ : Bolt, 2

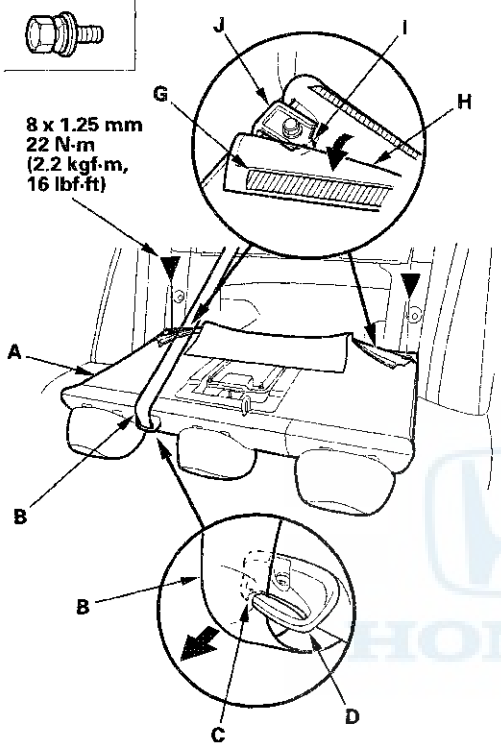

4. 2-door: Remove the rear side trim panel (see page 20-118).

5. Detach the harness clip (A), and remove the bolt, then remove the pivot bracket (B). 4-door is shown; 2-door is similar.

Fastener Location

▶ : Bolt, 1

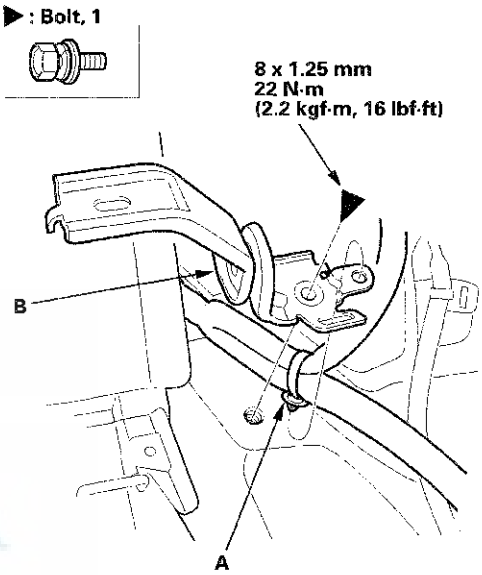

6. Install the seat-back in the reverse order of removal, and note these items:

   - Guide the belt over the front of the seat-back as you install the seat-back.
   - Before attaching the rear seat-back, make sure there are no twists or kinks in the rear center seat belt.

Seat Cushion

NOTE:
- Take care not to scratch the body or tear the seat covers.
- 4-door is shown; 2-door is similar.

1. Remove the bolt between the seat-back (A) and the seat cushion (B).

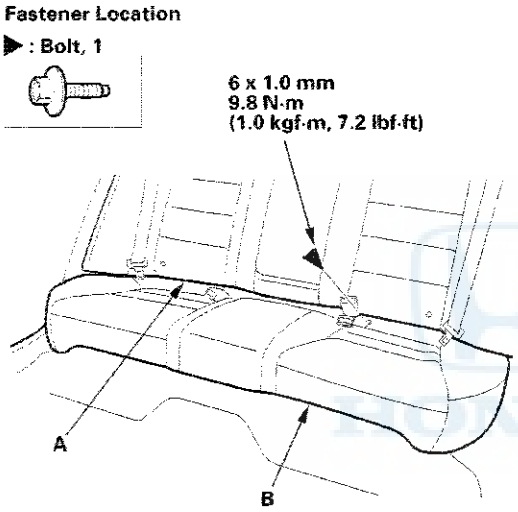

2. Pull each front edge of the seat cushion (A) up to release the hooks (B), then pull back the seat cushion, and remove it.

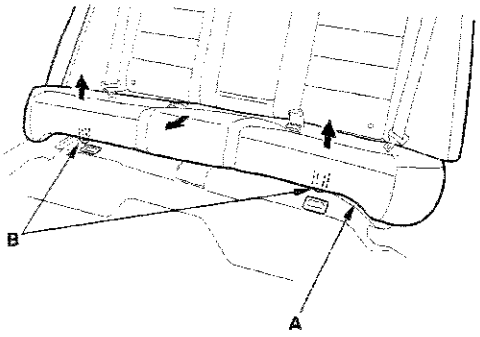

3. Install the seat cushion in the reverse order of removal, and note these items:

   - Before attaching the seat cushion, make sure there are no twists or kinks in the seat belts.
   - When installing the seat cushion, slip the seat belt buckles through the slits in the seat cushion.

Seat Side Bolster - 4-door

SRS components are located in this area. Review the SRS component locations (see page 24-19) and the precautions and procedures (see page 24-23) before doing repairs or service.

NOTE: Take care not to scratch the body or tear the seat covers.

1. Remove the seat cushion.

2. Remove the bolt securing the seat side bolster (A).

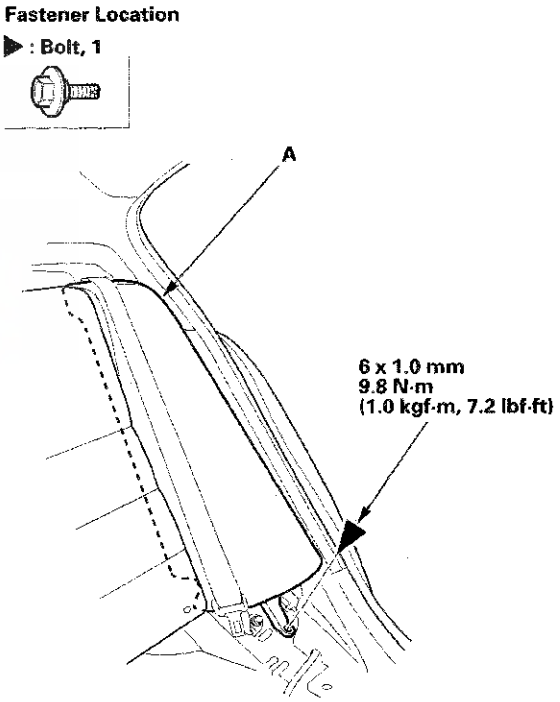

(cont'd)

Rear Seat Removal/Installation (cont'd)

3. Fold the seat-back down.

4. Lift the seat side bolster side bolster (A) up to release the hooks (B), then remove the seat side bolster.

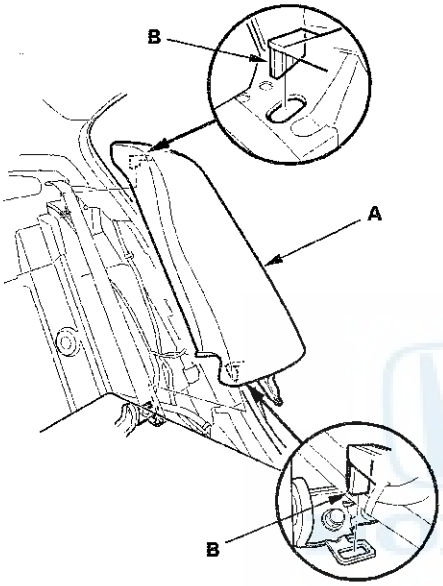

5. Install the seat side bolster in the reverse order of removal, and note these items:

   - Guide the belts over the front of the seat side bolster as you install the bolster.
   - Before attaching the seat side bolster, make sure there are no twists or kinks in the seat belts.

Rear Seat-back Latch Replacement

NOTE:
- Take care not to bend or scratch the interior trim.
- 4-door is shown; 2-door is similar.

1. Remove the rear shelf (see page 20-119).

2. Disconnect the seat-back release cable (A) from the seat-back latch (B), and remove the bolts, then remove the latch. Take care not to damage the cable fastener (C).

Fastener Locations

▶ : Bolt, 2

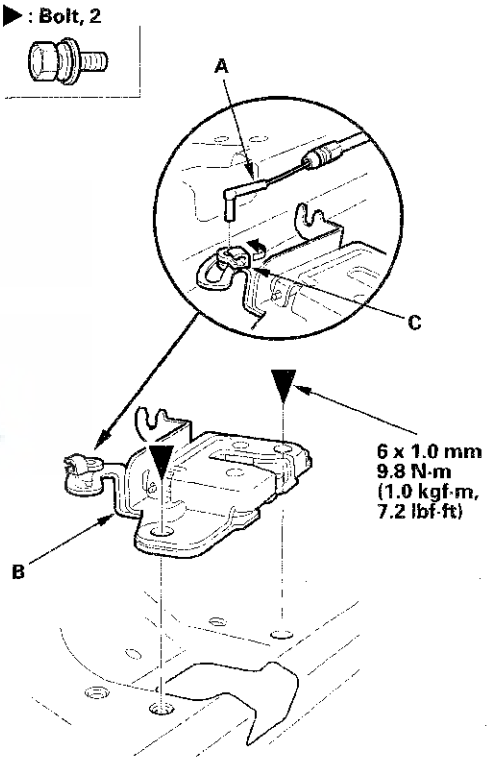

3. Install the latch in the reverse order of removal, and note these items:

   - Make sure the release cable is connected securely.
   - Make sure the seat-back locks securely and unlocks properly.

Rear Seat-back Release Lever/Cable Removal/Installation

NOTE:
- Take care not to bend or scratch the interior trim.
- 4-door is shown; 2-door is similar.

1. Remove the rear shelf (see page 20-119).

2. Disconnect the seat-back release cable (A) from the seat-back latch (B), and detach the cable clip (C) (2-door) or the cable clip (D) (4-door). Take care not to damage the cable fastener (E).

Fastener Locations

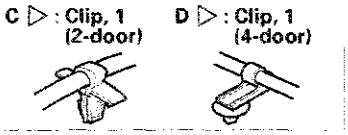

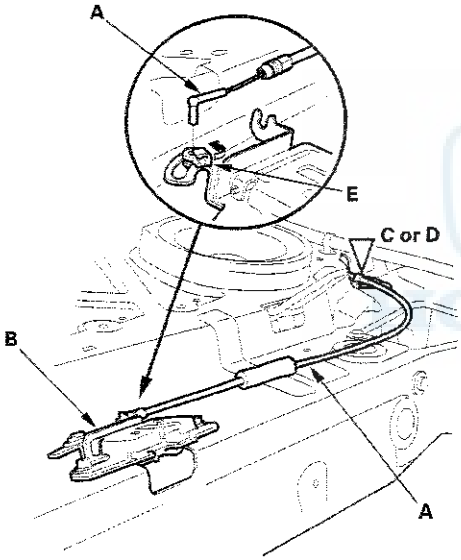

3. Open the trunk lid.

4. From the trunk compartment, push the tab (A) to release the hook (B), and slide the seat-back release lever (C) inward to release the hook (D), then remove it by pulling it out.

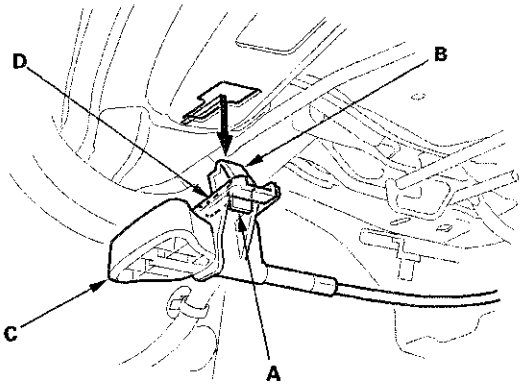

5. Install the release lever/cable in the reverse order of removal, and note these items:

   - Make sure the release cable is connected securely.
   - Make sure the seat-back locks securely and unlocks properly.

Rear Seat Armrest Replacement

Special Tools Required
KTC trim tool set SOJATP2014 *
* Available through the Honda Tool and Equipment Program; call 888-424-6857

4-door

NOTE:
- Use the appropriate tool from the KTC trim tool set to avoid damage when removing components.
- Take care not to tear the seams of damage the seat covers.

1. Fold the seat-back down.

2. Remove the trunk pass-through lid (see page 20-231).

3. Release the hook strip (A), then turn over the seat-back cover (B) as necessary.

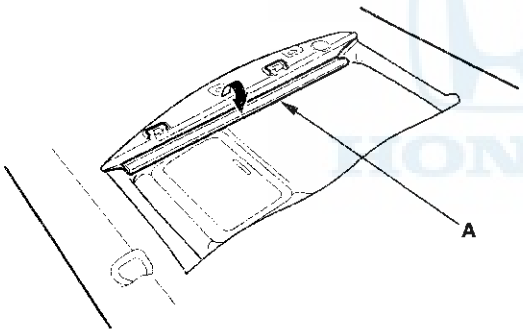

4. Remove the clip (A) from the left portion of the armrest pivot (B).

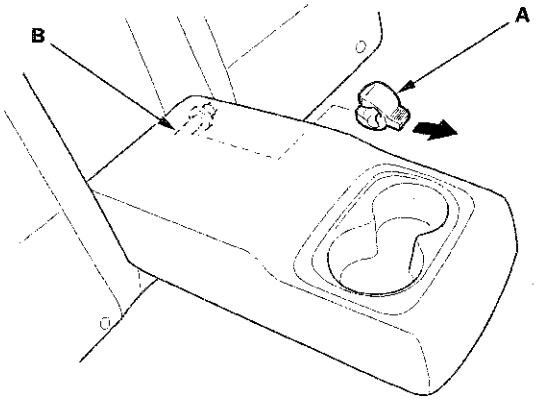

5. Remove the armrest clip (B) from the slit in the collar A by pinching the clip.

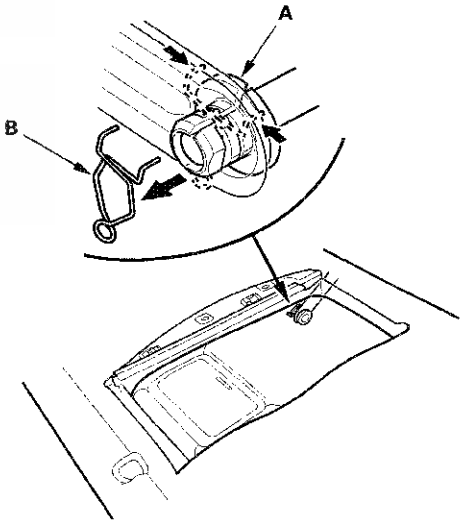

6. Slide the armrest (A) toward the driver's side of the vehicle, and remove the pivot shaft (B) from the collar (C) on the right side of the vehicle by pulling back on the armrest.

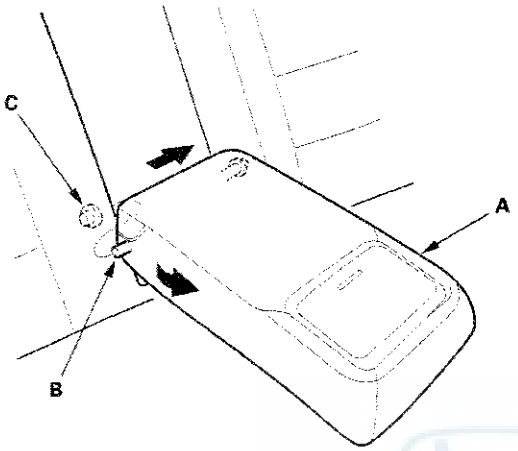

7. Remove the pivot shaft (A) from the collar (B) on the left, then remove the armrest (C).

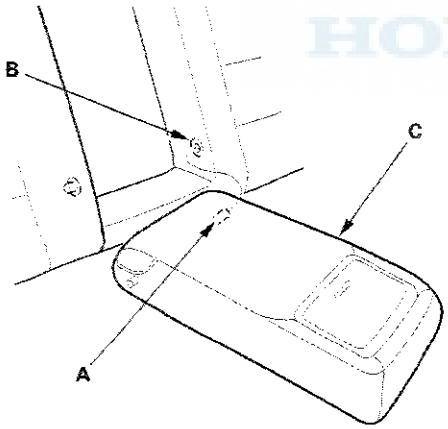

8. Remove the collars (A) from the seat-back (B).

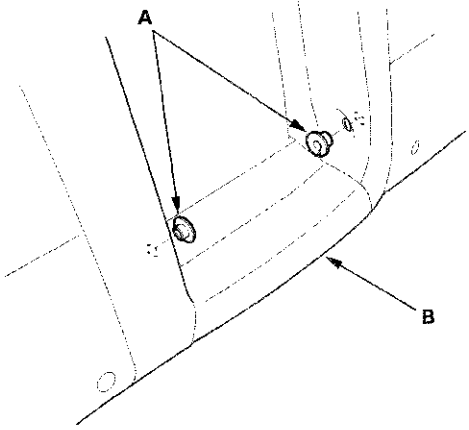

9. Install the armrest in the reverse order of removal.

Trunk Pass-through Lid Lock Cylinder Replacement

Special Tools Required
KTC trim tool set SOJATP2014 *
* Available through the Honda Tool and Equipment Program; call 888-424-6857

4-door

NOTE:
- Take care not to scratch the trunk pass-through lid.
- Use the appropriate tool from the KTC trim tool set to avoid damage when removing components.

1. Using the appropriate trim tool, pry the handle (A) up at both hook portions (B) on the forward side of the trunk pass-through lid (C). Then slide the handle half-way up.

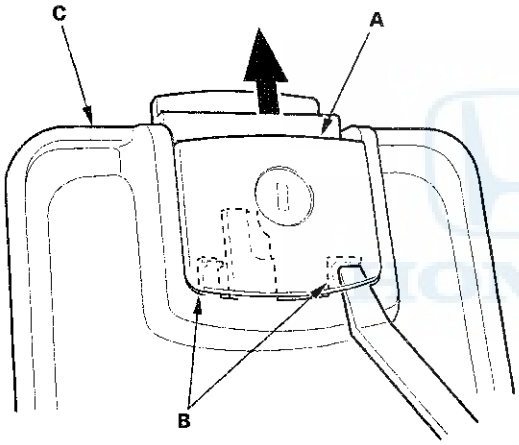

2. Remove the handle (A) from the trunk pass-through lid (B) by sliding it up.

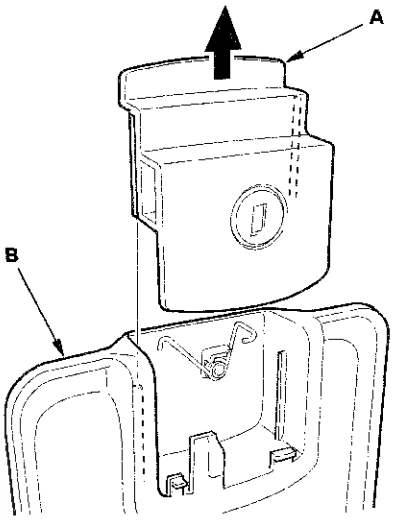

3. Remove the retainer clip (A), then remove the trunk pass-through lid lock cylinder (B) from the handle (C).

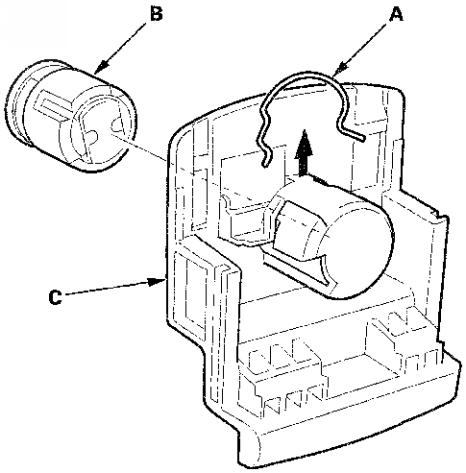

4. Install the lock cylinder in the reverse order of removal, and note these items:

   - Install the retainer clip on the handle, then install the lock cylinder. Be sure the clip is fully seated in the slot on the lock cylinder.
   - Make sure the trunk pass-through lid opens properly and locks securely.

Trunk Pass-through Lid Replacement

4-door

NOTE: Take care not to tear the seams or damage the seat covers.

1. Fold the rear seat-back down.
2. Remove the screws, and detach the hooks (A), then remove the trunk pass-through lid (B).

Fastener Locations

▶ : Screw, 2

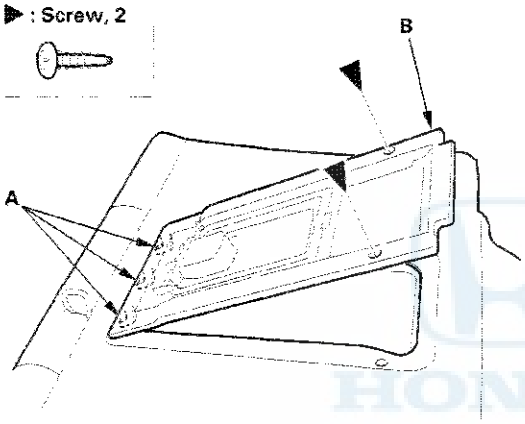

3. Install the trunk pass-through lid in the reverse order of removal.

Rear Seat Armrest Beverage Holder Replacement

Special Tools Required

KTC trim tool set SOJATP2014 *

* Available through the Honda Tool and Equipment Program; call 888-424-6857

4-door

NOTE:

- Take care not to tear the seams or damage the seat covers.
- Use the appropriate tool from the KTC trim tool set to avoid damage when removing components.

1. Using the appropriate trim tool, push on the rear hooks (A) to release the hooks from the wire (C), then lift up the rear edge of the beverage holder (B).

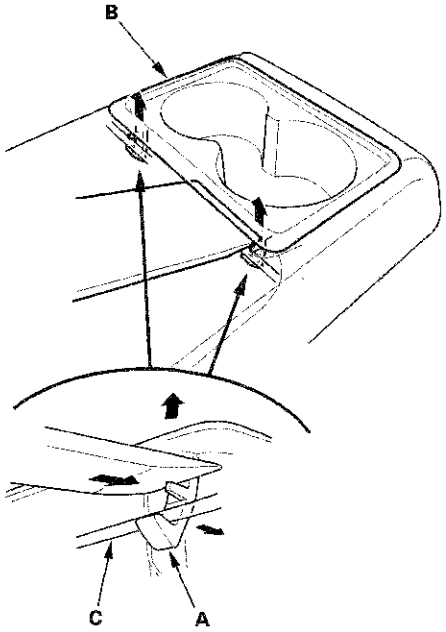

(cont'd)

Rear Seat Armrest Beverage Holder Replacement (cont'd)

2. Release the front hooks (A) from the wire (B), then remove the beverage holder (C).

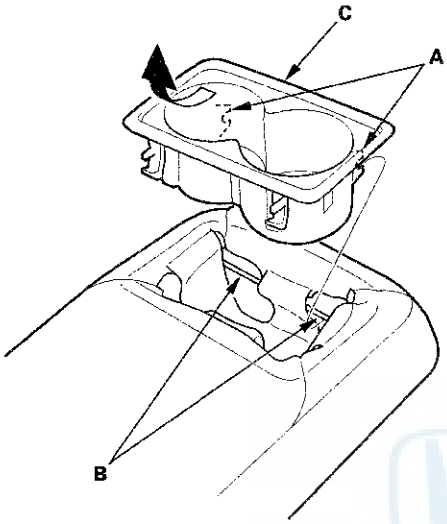

3. Install the beverage holder in the reverse order of removal. Make sure the front hooks are installed securely to the wire, then push down on the beverage holder, and install the rear hooks into the wire securely.

Rear Seat-back Cover Replacement

2-door

NOTE:
- Put on gloves to protect your hands.
- Take care not to tear the seams or damage the seat covers.

1. Remove the seat-back (see page 20-223).
2. Remove all of the head restraints.
3. Remove the screw, then remove the center belt guide (A).

Fastener Location

▶ : Screw, 1

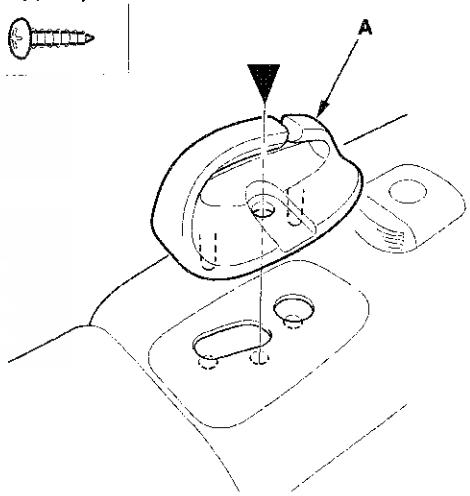

4. Release the lower hook strips (A) and the side hook strips (B).

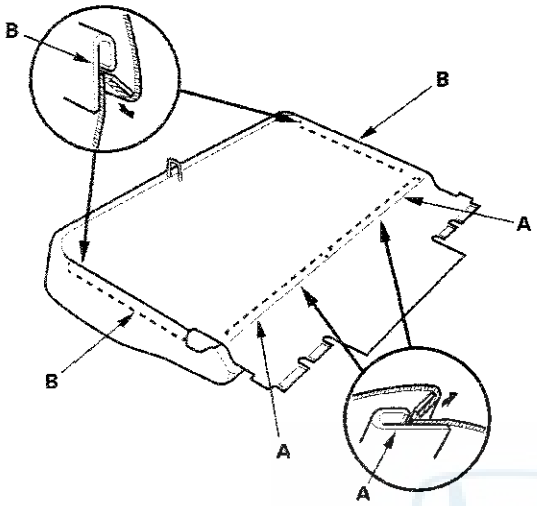

5. Pull back the seat-back cover (A), then release the hook strips (B).

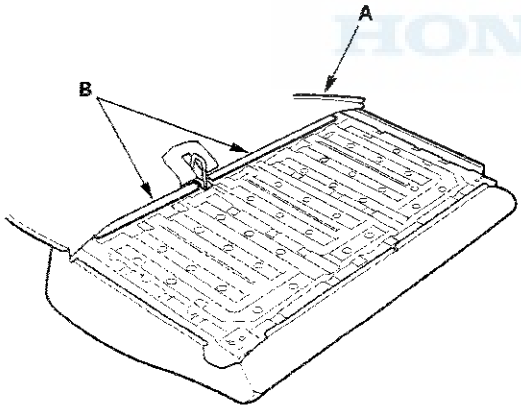

6. Pull out the seat-back frame (A) from the pad (B), then remove the head restraint guides (C) and the center head restraint guides (D) while pinching the end of the guides.

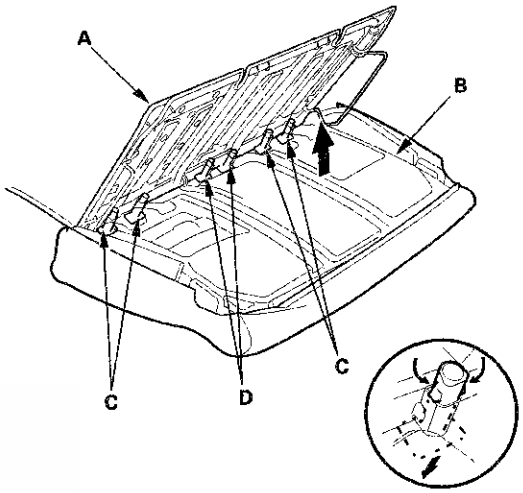

7. Remove the seat-back cover and the pad from the seat-back frame.

(cont'd)

Rear Seat-back Cover Replacement (cont'd)

8. Pull back the edge of the seat-back cover (A) all the way around, and remove the upholstery rings (B). Release the hooks (C) of the horizontal wires (D) from the vertical wires (E) on the pad, and remove the remaining upholstery rings, then remove the seat-back cover.

   NOTE: The seat cover except the leather seat cover is shown; the leather seat cover is similar.

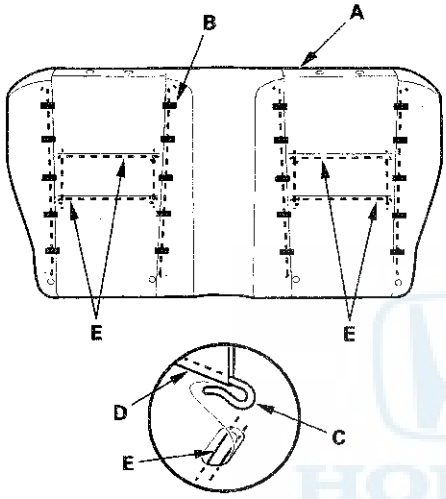

9. Install the cover in the reverse order of removal, and note these items:

   - To prevent wrinkles when installing a seat-back cover, make sure the material is stretched evenly over the pad before securing the upholstery rings and hook strips.
   - Replace all of the upholstery rings (A) fastening the seat-back cover (B) and pad wire (C) with new ones using commercially available upholstery ring pliers (D).

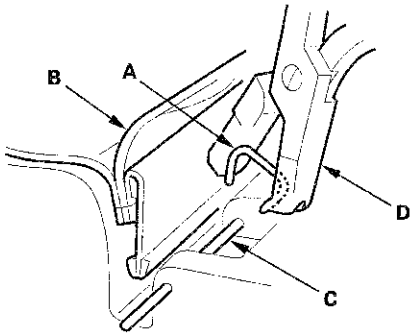

4-door

NOTE:
- Put on gloves to protect your hands.
- Take care not to tear the seams or damage the seat covers.

1. Remove the seat-back (see page 20-223).

2. Remove these items:

   - All of the head restraints
   - Armrest (see page 20-228)
   - Trunk pass-through lid (see page 20-231)

3. Remove the screw, then remove the center belt guide (A).

Fastener Location

▶ : Screw, 1

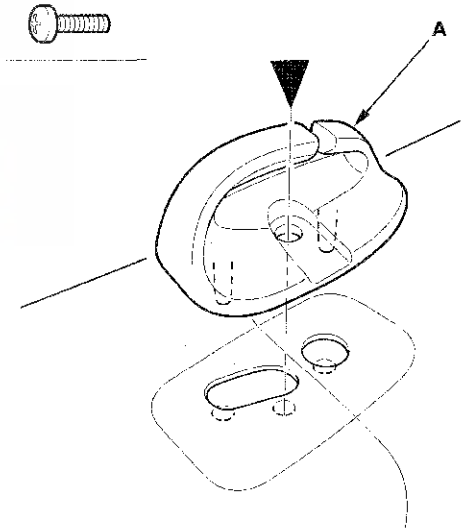

4. Release the lower Velcro fasteners (A) and the side hook strips (B).

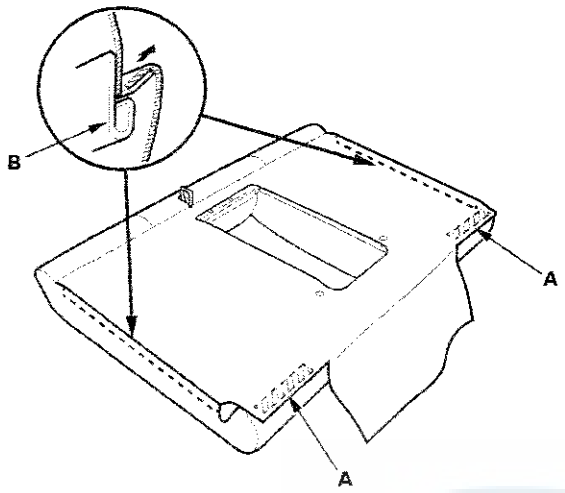

5. Pull back the seat-back cover (A), then release the hook strips (B), and remove the clips.

Fastener Locations

▷ : Clip, 8

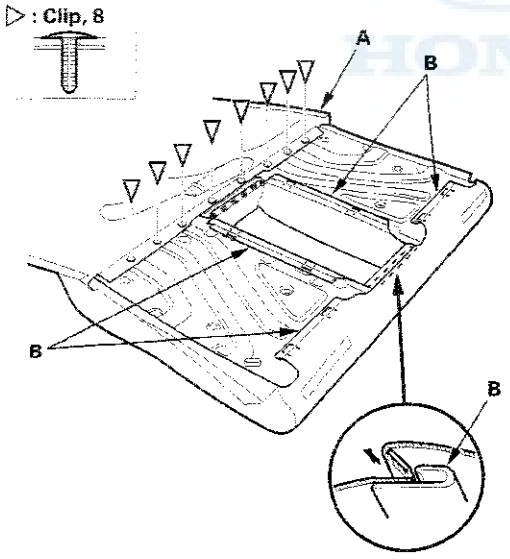

6. Pull out the seat-back frame (A) from the pad (B), then remove the head restraint guides (C) and the center head restraint guides (D) while pinching the end of the guides.

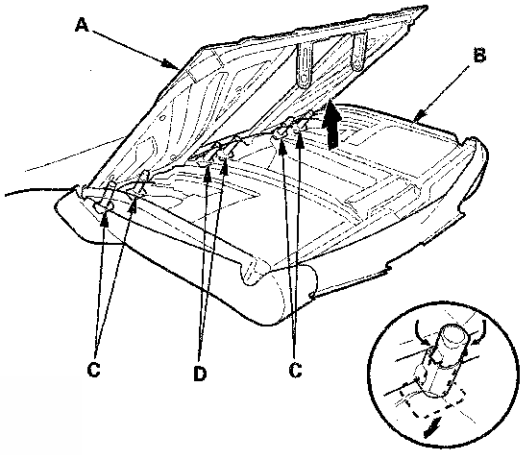

7. Remove the seat-back cover and pad from the seat-back frame.

8. Pull back the edge of the seat-back cover (A) all the way around, and release the hooks (B) of the horizontal wires (C) from the vertical wires (D) on the pad, and remove the upholstery rings (E), then remove the seat-back cover.

NOTE: The leather seat cover is shown; the other types of the seat covers are similar.

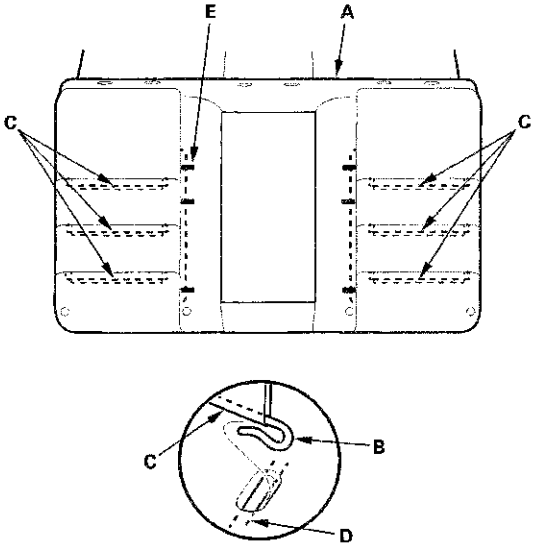

(cont'd)

Rear Seat-back Cover Replacement (cont'd)

9. Install the cover in the reverse order of removal, and note these items:

   - To prevent wrinkles when installing a seat-back cover, make sure the material is stretched evenly over the pad before securing the upholstery rings and hook strips.
   - Replace all of the upholstery rings (A) fastening the seat-back cover (B) and pad wire (C) with new ones using commercially available upholstery ring pliers (D).

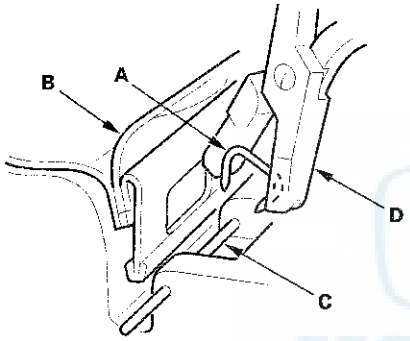

Rear Seat Side Bolster Cover Replacement

4-door

NOTE: Take care not to tear the seams or damage the seat covers.

1. Remove the seat side bolster (see page 20-225).

2. Release all the hook strips (A), fold back the seat side bolster cover (B), and release the cover from the retaining hooks (C).

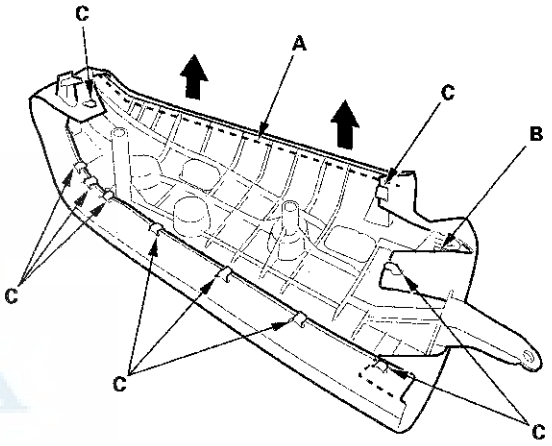

3. Install the cover in the reverse order of removal. To prevent wrinkles when installing a side bolster cover, make sure the material is stretched evenly over the pad before securing the hook strips and the retaining hooks.

Rear Seat Cushion Cover Replacement

NOTE:
- Put on gloves to protect your hands.
- Take care not to tear the seams or damage the seat covers.

1. Remove the seat cushion (see page 20-225).

2. From the back of the seat-back, release all the upholstery rings (A), and fold back the seat cushion cover (B).

2-door

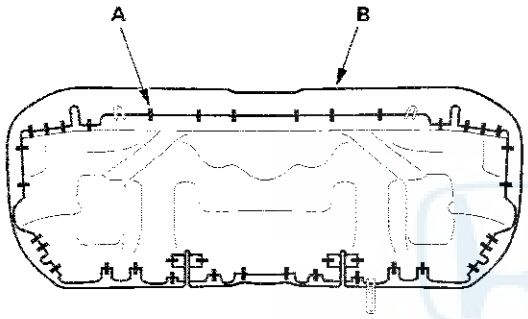

4-door

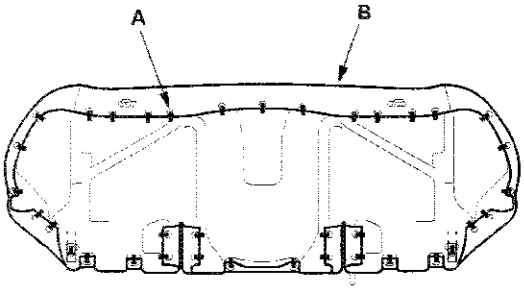

3. Pull back the edge of the seat cushion cover (A) all the way around, and release the upholstery rings (B), and release the hooks (C) of the horizontal wires (D) from the vertical wires (E) on the pad, then remove the seat cushion cover.

NOTE: The leather seat cover is shown; the other types of the seat cover are similar.

2-door

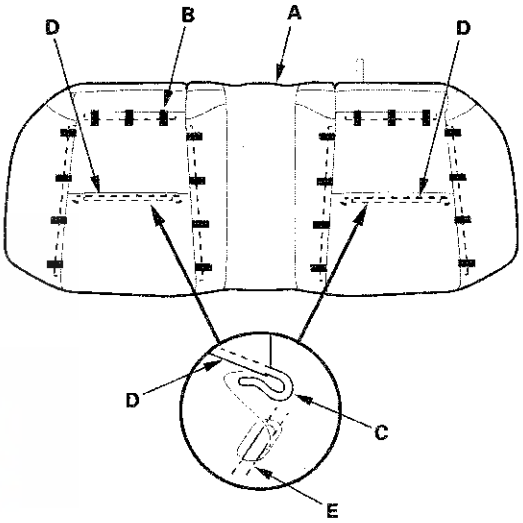

4-door

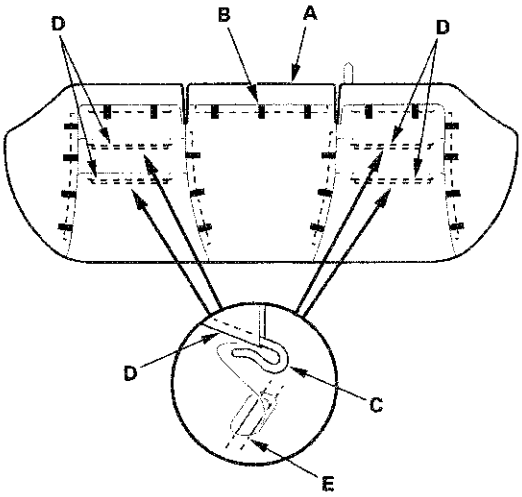

(cont'd)

Rear Seat Cushion Cover Replacement (cont'd)

4. Install the cover in the reverse order of removal, and note these items:

   - To prevent wrinkles when installing a seat cushion cover, make sure the material is stretched evenly over the pad before securing the upholstery rings.
   - Replace all of the upholstery rings (A) fastening the seat-back cover (B) and pad wire (C) with new ones using commercially available upholstery ring pliers (D).

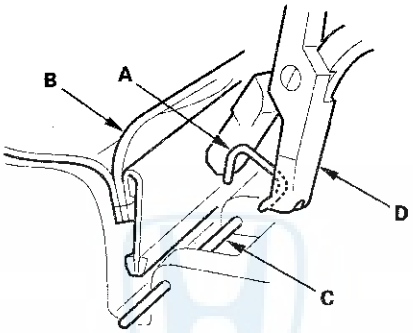

Front Bumper Removal/Installation

NOTE:
- Have an assistant help you when removing and installing the front bumper.
- Take care not to scratch the front bumper and the body.
- Put on gloves to protect your hands.

1. Remove the front grille cover:

   - 2-door (see page 20-257)
   - 4-door (see page 20-257)

2. Remove the screws (A) and the clips (B, C) securing the front bumper (D).

   NOTE: To remove the clips, pry the inner clip pins up at the edge near the line (E) on the clip heads.

2-door

Fastener Locations

A ▶ : Screw, 2 B ▷ : Clip, 8 C ▷ : Clip, 2

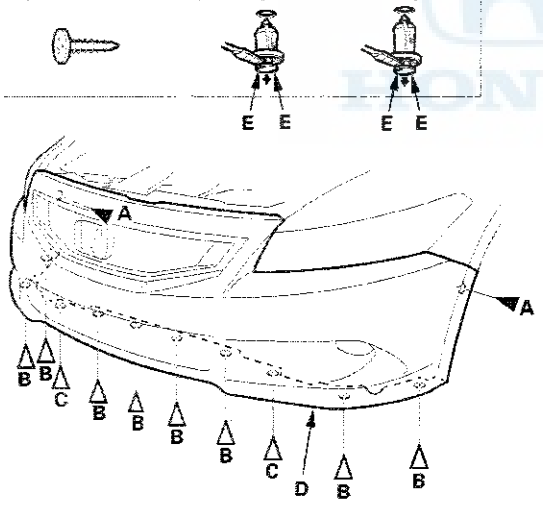

4-door

Fastener Locations

A ▶ : Screw, 2 B ▷ : Clip, 8 C ▷ : Clip, 2

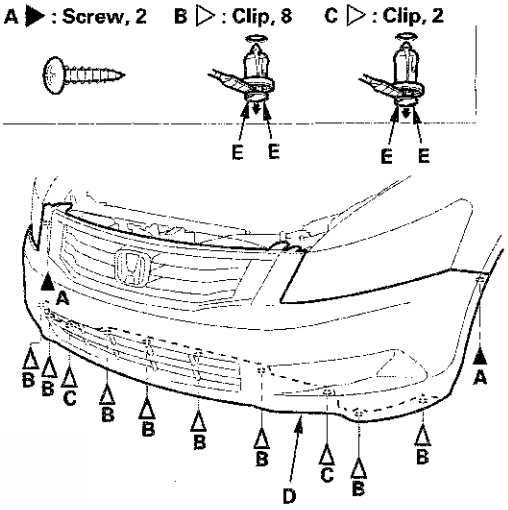

3. Pull on the front bumper (A) at the wheel arch areas to release it from the hooks (three places) (B) on the side spacers (C).

2-door

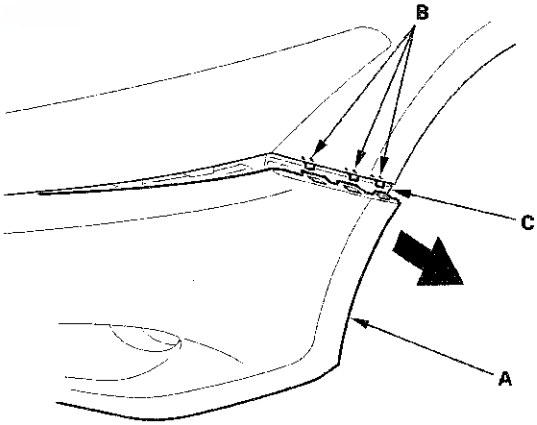

(cont'd)

Front Bumper Removal/Installation (cont'd)

4-door

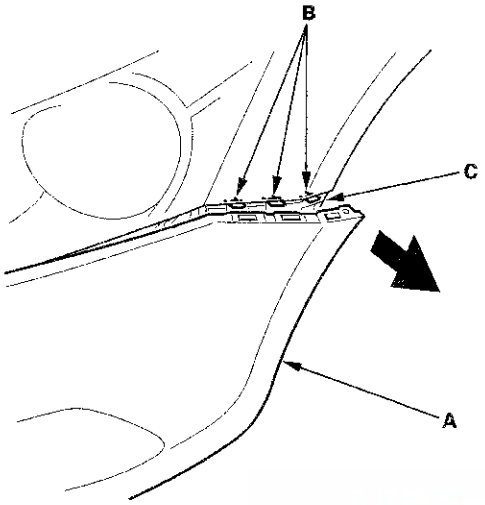

4. 2-door: With the help of an assistant, while pulling both wheel arch portions of the front bumper (A) away from the side spacers (B), release the hooks (C) along the upper beams (D) on both sides by pulling the bumper out.

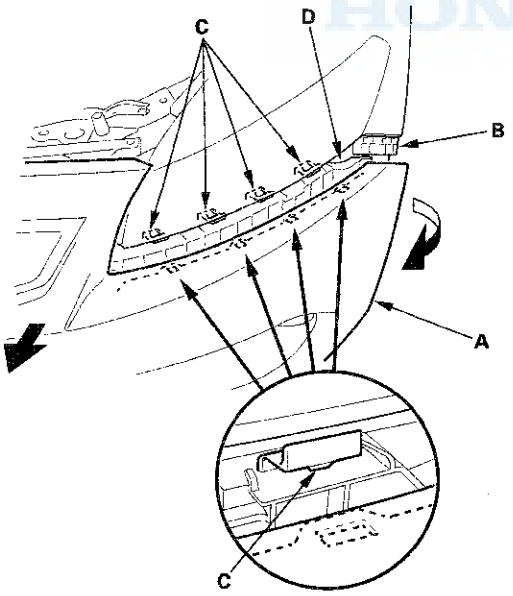

5. 4-door: With the help of an assistant, while pulling both wheel arch portions of the front bumper (A) away from the side spacers (B), starting at the outside hooks (C) on both upper beams (D), release the hooks along the upper beams by pulling out the bumper, and release the bumper from the pins (E) on both headlights.

   NOTE: When releasing the last hook, release it while holding the front bumper to prevent damage the pin.

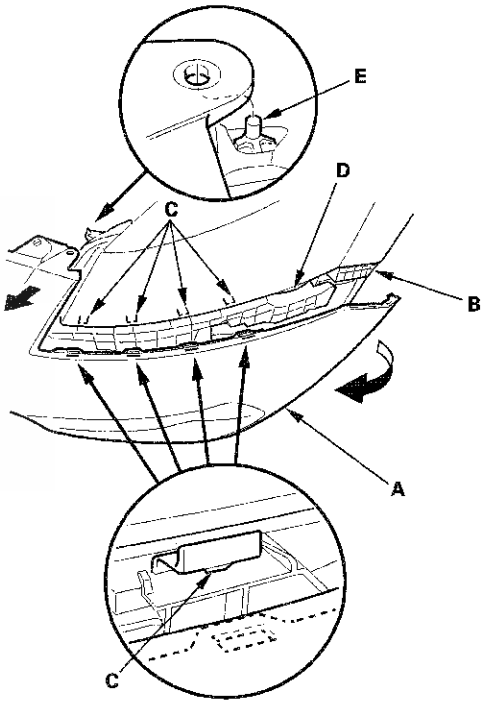

6. Remove the front bumper (A).

2-door

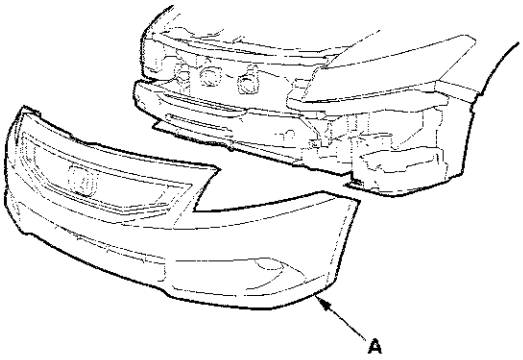

4-door

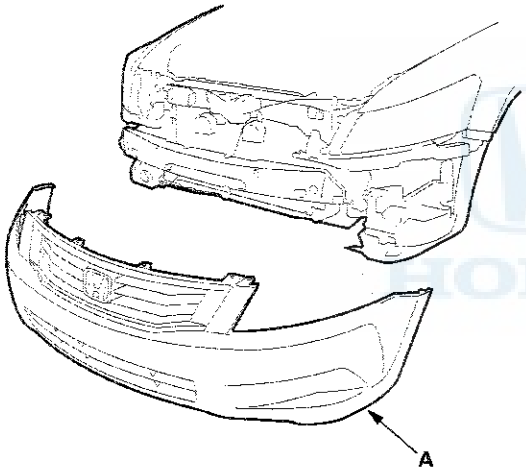

7. Remove the bolts, and release the hooks (A), then remove the front bumper absorber (B) from the front bumper beam (C).

2-door

Fastener Locations

▶ : Bolt, 2

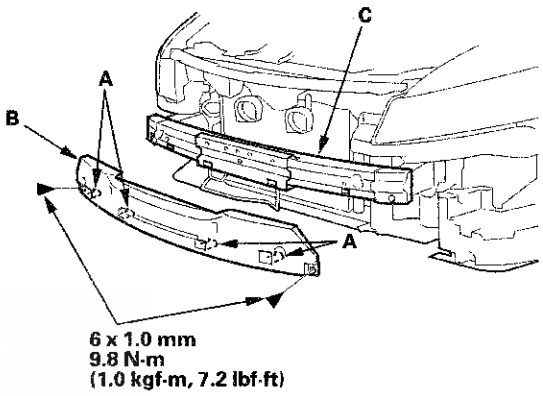

4-door

Fastener Locations

▶ : Bolt, 2

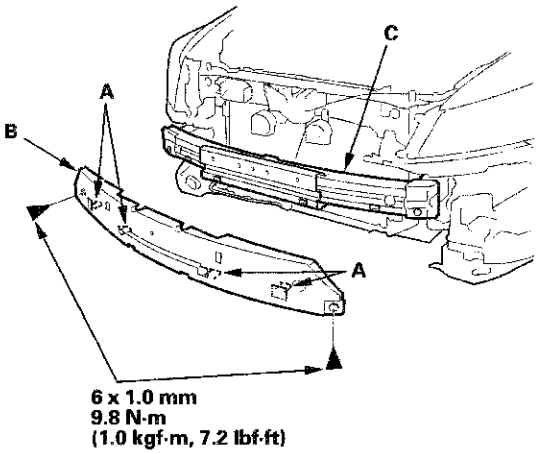

(cont'd)

Front Bumper Removal/Installation (cont'd)

8. 2-door: Remove the bolts (A) and the clip (B) securing the front bumper center upper beam (C). Detach the clip (D), and release the hook (E), then remove the beam from the body.

   NOTE: To remove the clips (B), pry the inner clip up at the edge near the line (F) on the clip heads.

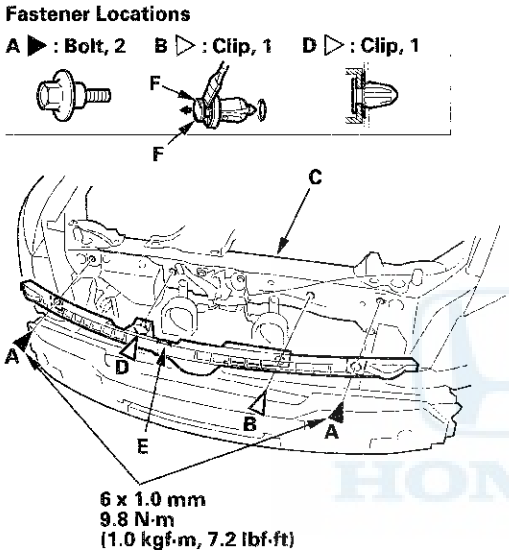

9. Install the bumper in the reverse order of removal, and note these items:

   - Make sure the front bumper engages the hooks (of both upper beams and side spacers) and the pins (4-door) (of both headlights) on each side securely.
   - If the clips are damaged or stress-whitened, replace them with new ones.
   - Push the clips and the hooks into place securely.

Front Bumper Fog Light Cover Replacement

2-door

NOTE: Take care not to scratch the front bumper.

1. Remove the front bumper (see page 20-239).

2. Remove the screws (A, B), then remove the front bumper fog light cover (C) from the front bumper (D).

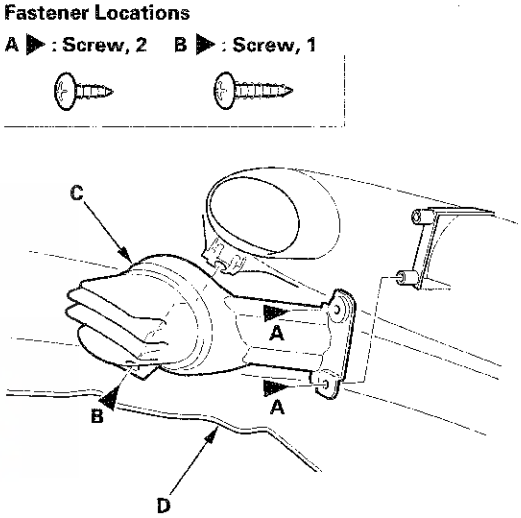

3. Install the bumper fog light cover in the reverse order of removal.

Front Air Spoiler Replacement

NOTE:
- Take care not to scratch the front bumper.
- Put on gloves to protect your hands.

1. Remove the clips securing the front air spoiler (A) from under the front bumper (B).

   NOTE: To remove the clips, pry the inner clip up at the edge near the line (C) on the clip heads.

2-door

Fastener Locations

▷ : **Clip, 4**

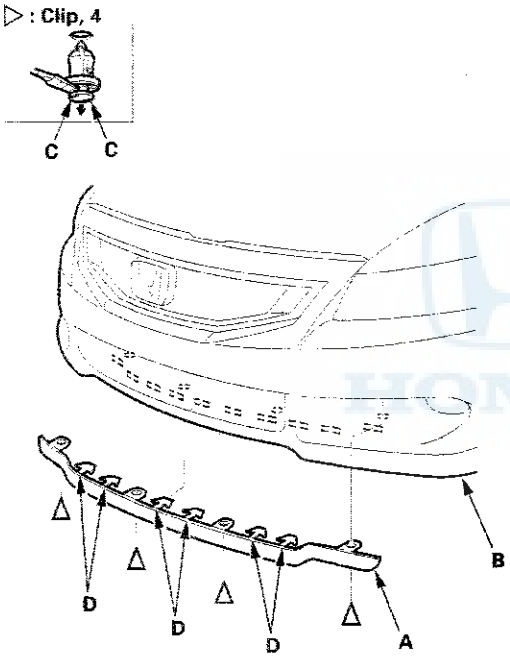

4-door

Fastener Locations

▷ : **Clip, 4**

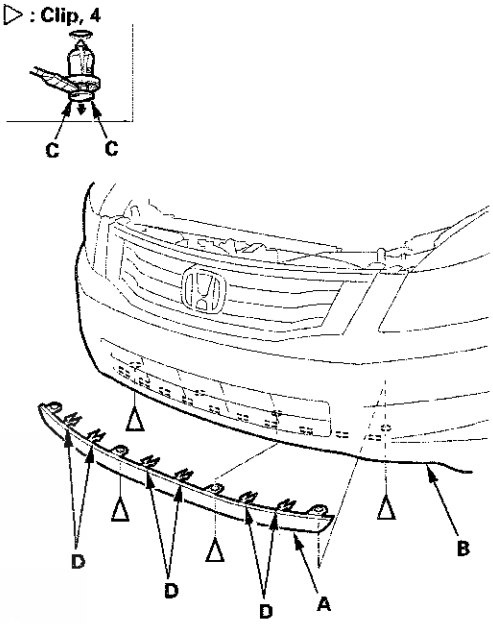

2. Pull the front air spoiler back to detach the hooks (six places) (D), and remove the spoiler.

3. Install the spoiler in the reverse order of removal:

   - If the clips are damaged or stress-whitened, replace them with new ones.
   - Push the hooks and the clips into place securely.

Rear Bumper Removal/Installation

NOTE:
- Have an assistant help you when removing and installing the rear bumper.
- Take care not to scratch the rear bumper and the body.
- Put on gloves to protect your hands.

1. Remove the caps (A). Remove the clips (B), the screws (C, D), and the bolts (E) securing the rear bumper (F).

   NOTE: To remove the clips, pry the inner clip up at the edge near the line (G) on the clip heads.

2-door

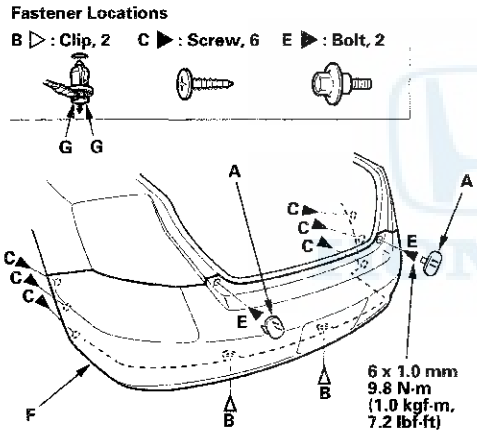

4-door

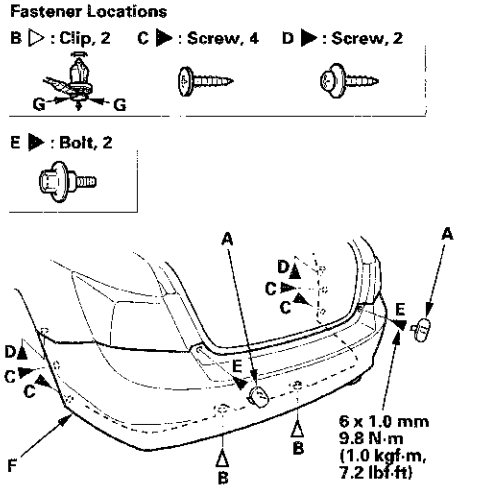

2. Pull on the rear bumper (A) at the wheel arch areas to release it from the hooks (B) on the side spacers (C).

2-door

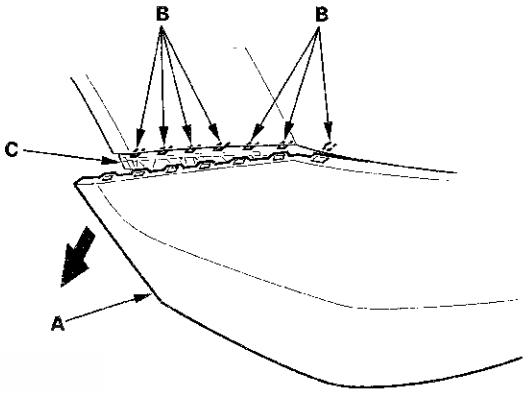

4-door

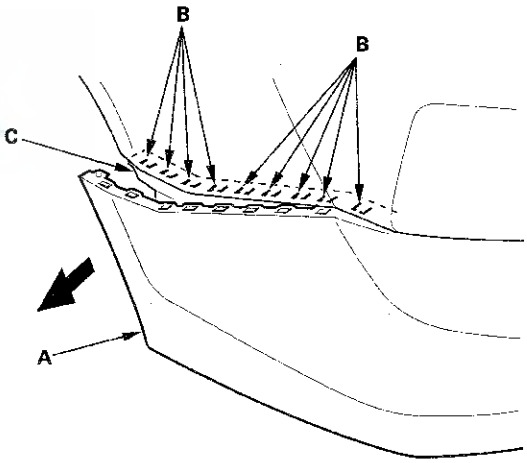

3. With the help of an assistant, while pulling the wheel arch portion away from the side spacers (A), pull the rear bumper (B) to release the bumper from the hooks (C) on the side bracket (D).

2-door

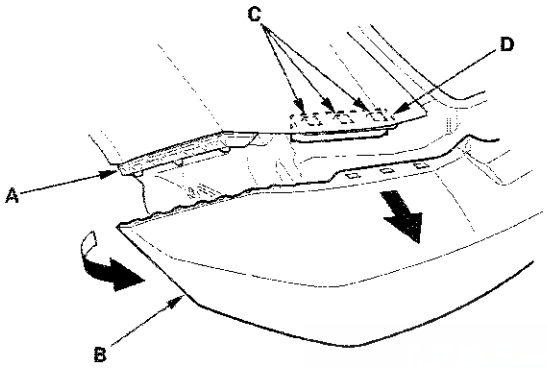

4-door

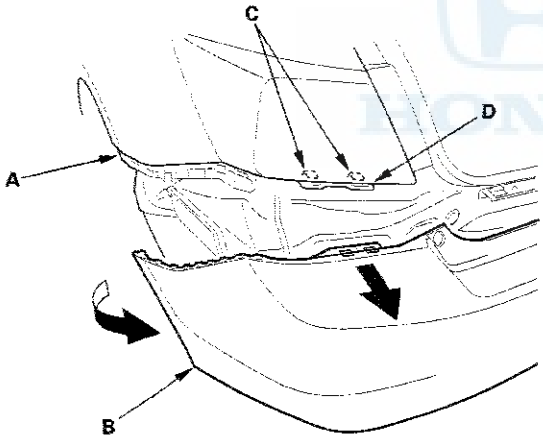

4. With the help of an assistant, pull the rear bumper to release the bumper (A) from the hooks (four places) (B) on the upper brackets (C). 2-door: Disconnect the rear license plate light connector (D).

2-door

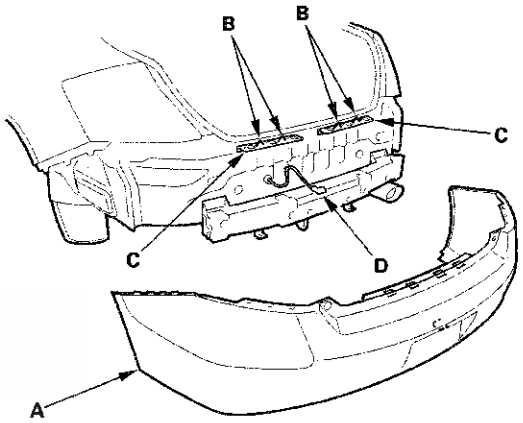

4-door

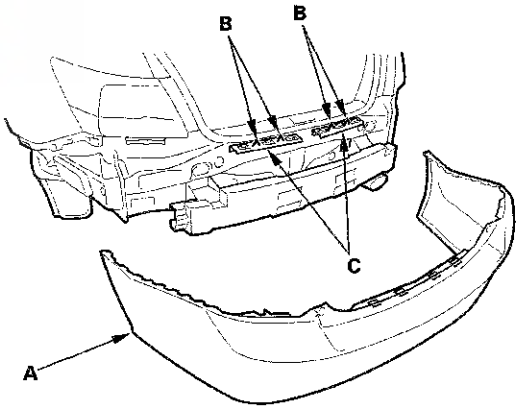

(cont'd)

Rear Bumper Removal/Installation (cont'd)

5. Remove the rear bumper absorber (A) from the rear bumper beam (B) by pulling the absorber to release the projections (C) on both sides.

2-door

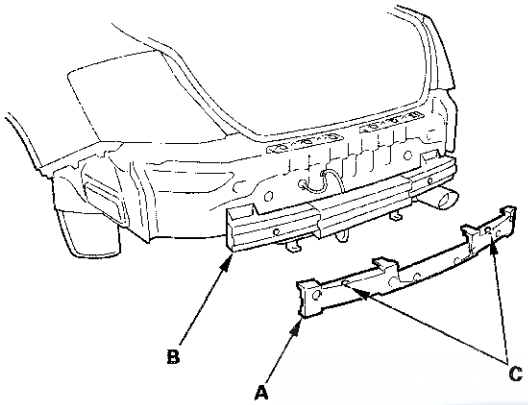

4-door

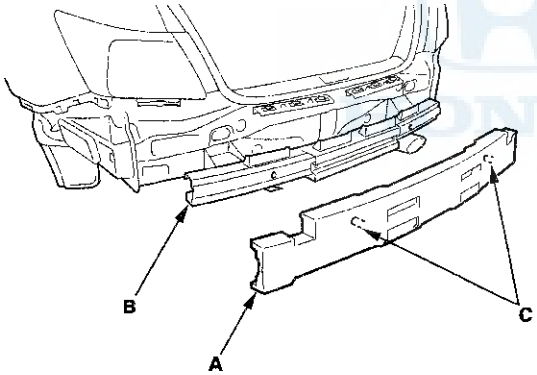

6. Install the bumper in the reverse order of removal, and note these items:

   - Make sure the rear bumper engages the hooks (of both the side bracket and side spacers) on each side securely.
   - If the clips are damaged or stress-whitened, replace them with new ones.
   - Push the clips and the hooks into place securely.

Rear Bumper Finisher Cover Replacement

2-door

NOTE:
- Put on gloves to prevent damage.
- Take care not to scratch the rear bumper and the body.

1. Remove the screw and the clips. Pull the rear bumper finisher cover (A) forward to release the hooks (B), then remove the cover from the rear bumper (C).

   NOTE: To remove the clips, pry the inner clip up at the edge near the line (D) on the clip heads.

   Fastener Locations

   ▶ : Screw, 1 ▷ : Clip, 2

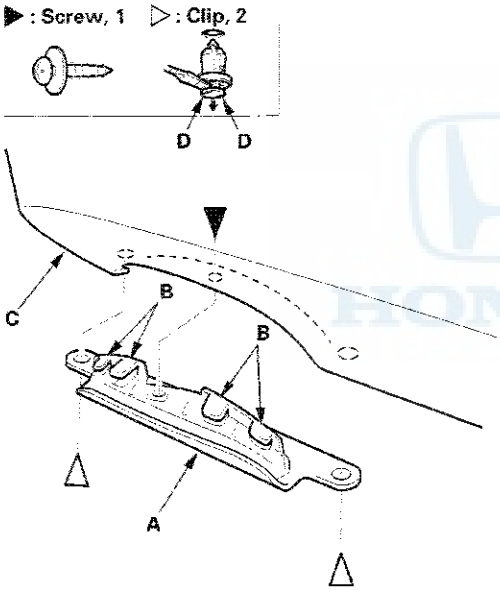

2. Install the cover in the reverse order of removal, and note these items:

   - If the clips are damaged or stress-whitened, replace them with new ones.
   - Push the clips into place securely.

Hood Adjustment

1. Remove these items:

   - Front grille cover:
     - 2-door (see page 20- 257)
     - 4-door (see page 20- 257)
   - Cowl covers (see page 20-261)
   - Hood latch cover, 4-door (see step 2 on page 20-285)

2. Slightly loosen each bolt (A).

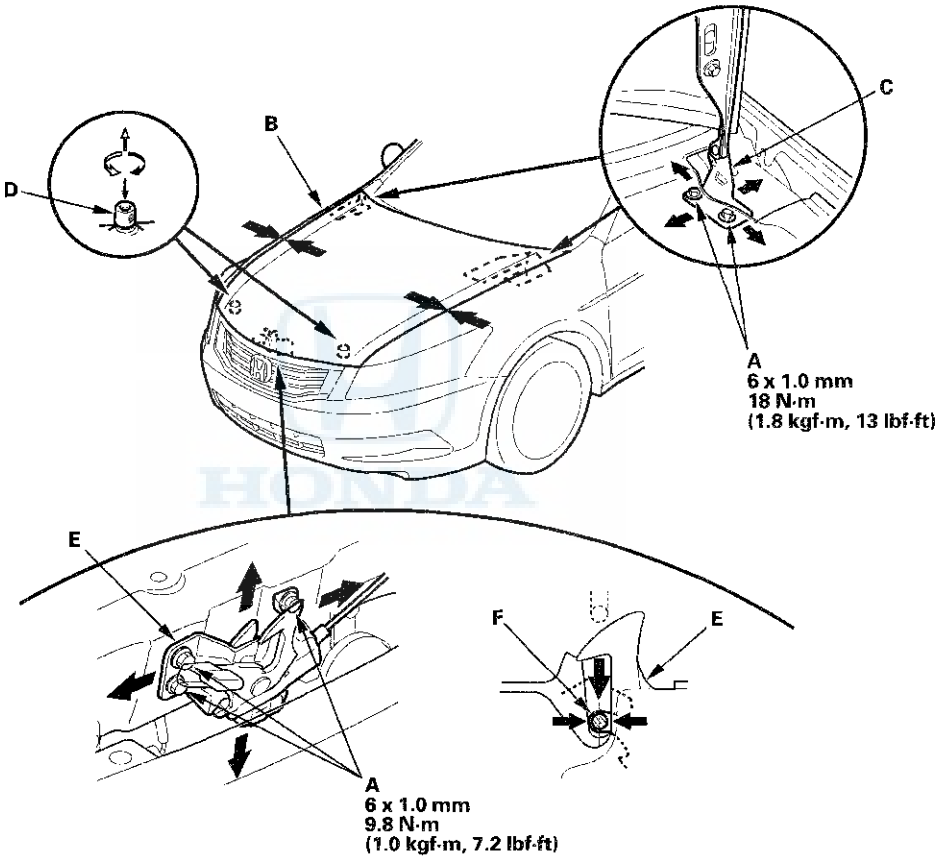

3. Adjust the hood (B) alignment in the following sequence:

   - Adjust the hood right and left, as well as forward and rearward, by using the elongated holes in the hood hinges (C).
   - Turn the hood edge cushions (D), in or out as necessary, to make the hood fit flush with the body at the front and side edges.

4. Adjust the hood latch (E) to obtain the proper height at the forward edge, and move the hood latch right or left until the striker (F) is centered in the hood latch.

5. Tighten the bolts to the specified torque.

6. Check that the hood opens properly and closes securely.

7. Apply touch-up paint to the hinge mounting bolts and around the hinges, and let the paint dry.

8. Apply multipurpose grease to the hood latch and the hood hinges as indicated by the arrows.

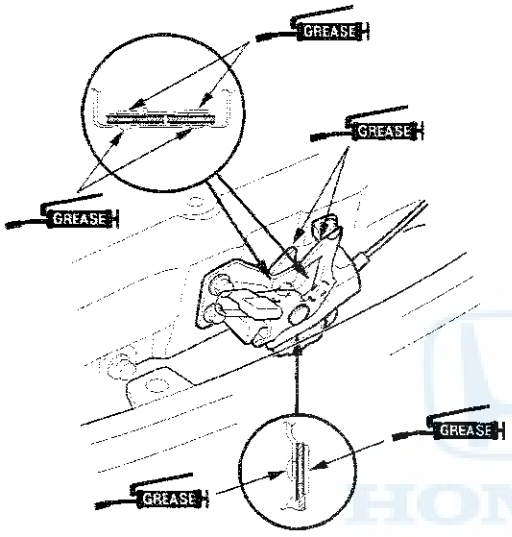

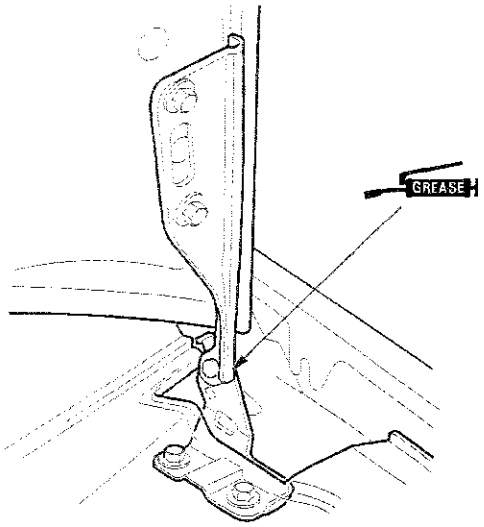

9. Reinstall all of the removed parts.

Hood Seal and Hood Molding Replacement

1. Using a clip remover, detach the clips (A), then remove the hood seal (B). On Canada models: Detach the clips (C), then remove the hood molding (D). Take care not to scratch the hood.

2-door - Except Canada models

Fastener Locations

A ▷ : Clip, 9

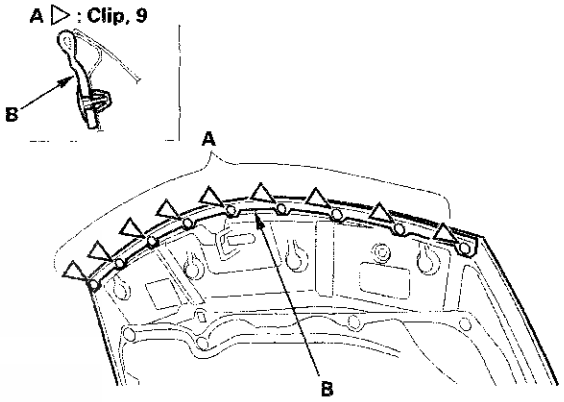

2-door - Canada models

Fastener Locations

C ▷ : Clip, 9

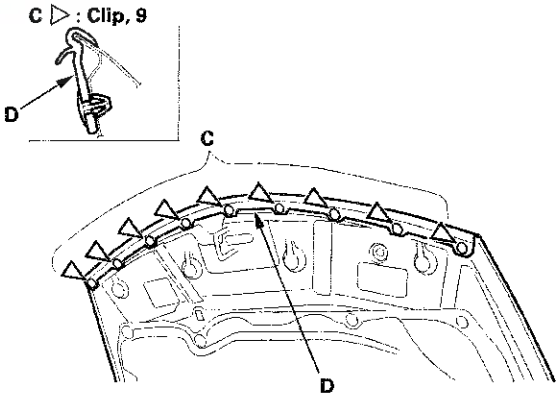

(cont'd)

Hood Seal and Hood Molding Replacement (cont'd)

4-door - Except Canada models

Fastener Locations

A ▷ : Clip, 9

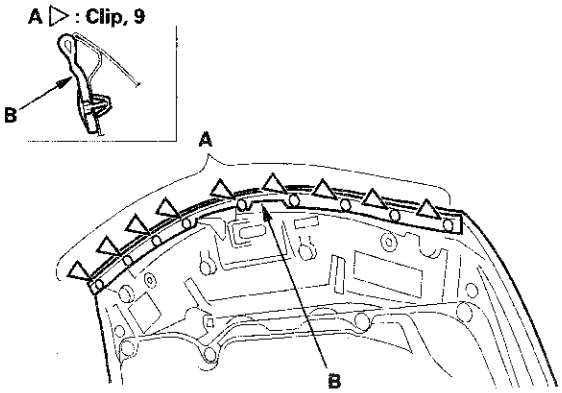

4-door - Canada models

Fastener Locations

C ▷ : Clip, 7

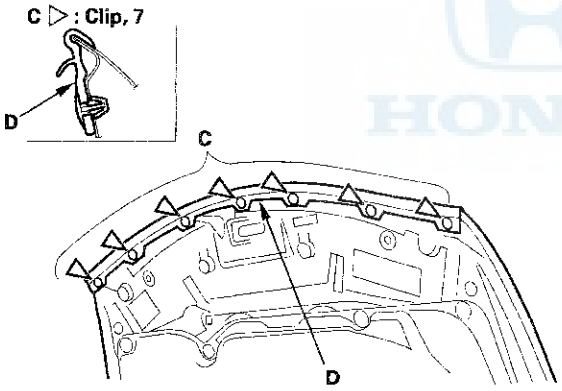

2. Install the seal or the molding in the reverse order of removal, and note these items:

   - If the clips are damaged or stress-whitened, replace them with new ones.
   - Push the clips into place securely.

Hood Insulator Replacement

For Some Models

1. Using a clip remover, detach the clips. Remove the insulator (A) by pulling it away from the hooks (B). Take care not to scratch the hood.

Fastener Locations

▷ : Clip, 9

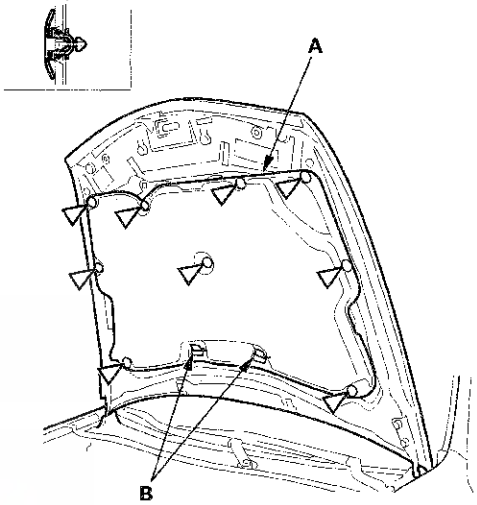

2. Install the insulator in the reverse order of removal, and note these items:

   - If the clips are damaged or stress-whitened, replace them with new ones.
   - Push the clips into place securely.

Trunk Lid Adjustment

1. Remove the rear shelf (see page 20-119).

2. Pry up on the notches (A) to release the rear hooks (B), and pull the cap (C) up to release the side hooks (D), then remove the cap.

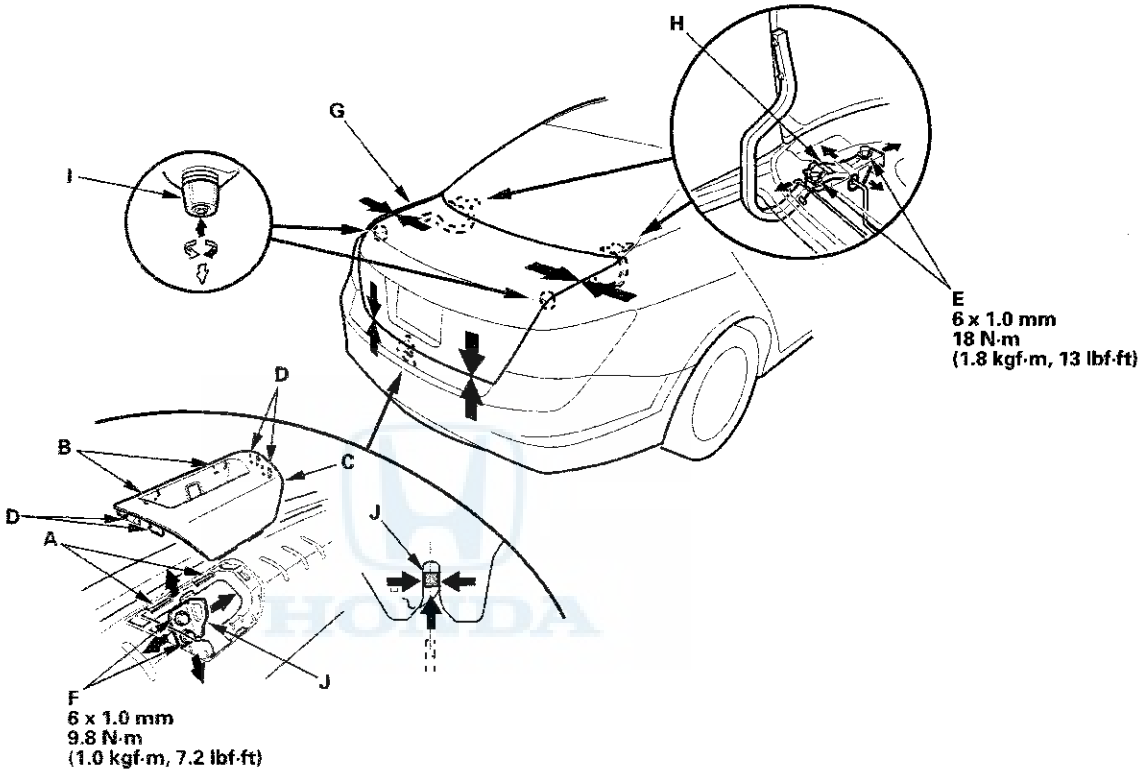

3. Slightly loosen the trunk lid hinge bolts (E) and the striker bolts (F).

4. Adjust the trunk lid (G) alignment in the following sequence:

   - Adjust the trunk lid hinges (H) right and left, as well as forward and rearward, by using the elongated holes. Take care not to hit the rear window when loosening the bolts.
   - Turn the trunk lid edge cushions (I), in or out as necessary, to make the trunk lid fit flush with the body at the rear and side edges.
   - Adjust the fit between the trunk lid and the trunk lid opening by moving the striker (J).

5. Tighten the bolts to the specified torque.

6. Make sure the trunk lid opens properly and locks securely.

7. Reinstall all removed parts.

Trunk Lid Torsion Bar Replacement

Special Tools Required
Torsion bar assembly tool 07AAF-SNAA100

1. Remove the torsion bars (A) from the torsion bar center clip (B).

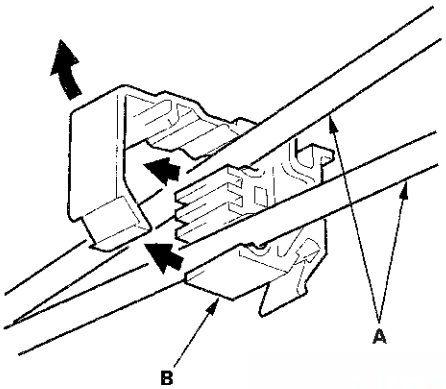

2. Put on gloves to protect your hands. Remove the torsion bars with the torsion bar assembly tool from both trunk lid hinges. First remove the left torsion bar (A), then remove the right torsion bar (B).

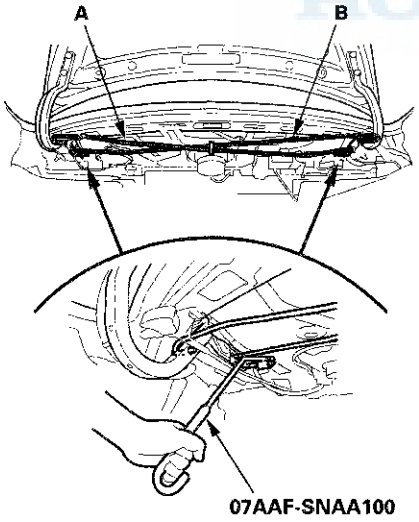

3. Remove the torsion bar center clip (A) from the body.

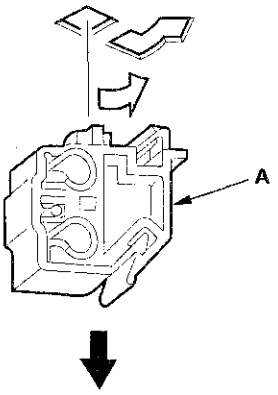

4. Install the torsion bars in the reverse order of removal, and note these items:

   - The shapes of the right torsion bar (A) and the left torsion bar (B) are shown. Install the torsion bars properly.
   - Adjust the torsion bars forward or rearward with the torsion bar assembly tool.
   - Positions where each torsion bar was installed in the factory are following:
     – Left torsion bar: Normal position
     – Right torsion bar: Normal position
   - Make sure the trunk lid opens properly and locks securely.

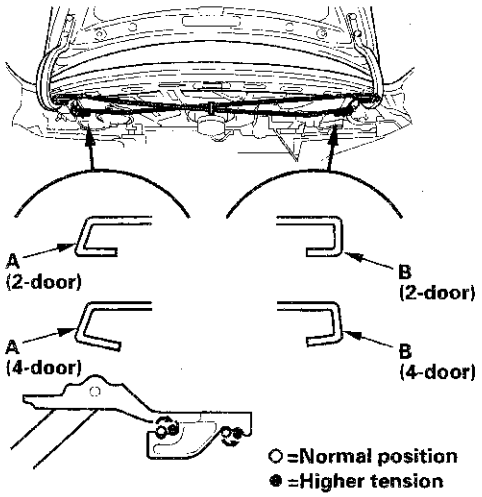

Trunk Lid Weatherstrip Replacement

NOTE: 4-door is shown; 2-door is similar.

1. Remove the trunk lid weatherstrip (A) by pulling it off.

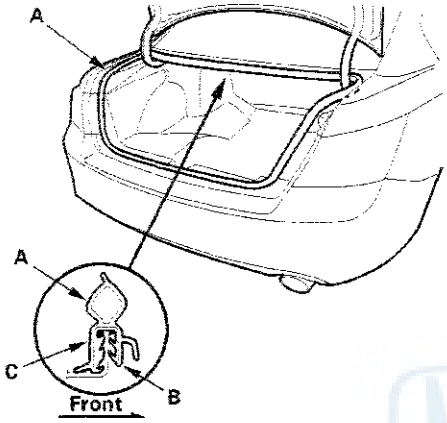

2. Locate the painted alignment mark (B or C) on the trunk lid weatherstrip. Align the painted mark in the center of the trunk lid opening, and install the trunk lid weatherstrip all the way around in the direction shown. Make sure there are no wrinkles in the weatherstrip.

3. Check for water leaks.

Trunk Lid Cushion Replacement

1. Remove the trunk lid cushion (A) by pulling it out to detach the clips.

Fastener Locations

▷ : Clip, 3

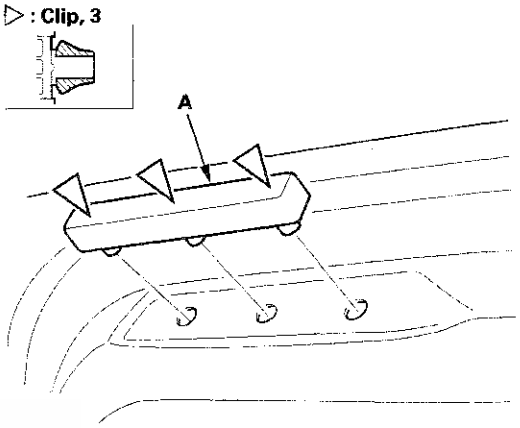

2. Replace the trunk lid cushion with a new one.

3. Install the new trunk lid cushion by pushing on the clip portions until the clips snap into place.

Trunk Lid Dynamic Damper Replacement

2-door

1. Remove the cover (A) by releasing the hooks (B). Remove the bolts, and detach the clips, then remove the trunk lid dynamic damper bracket (C) with the trunk lid dynamic damper. Take care not to scratch the trunk lid.

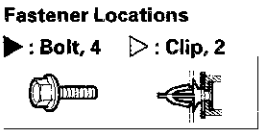

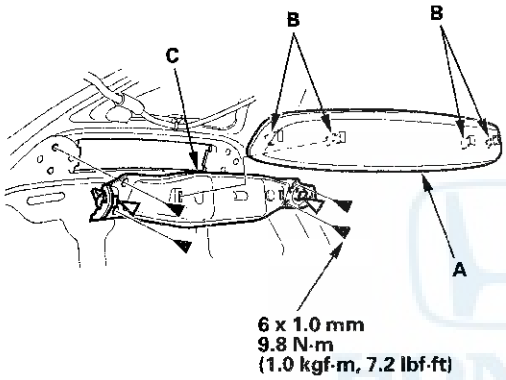

2. Install the damper in the reverse order of removal, and note these items:

   - If the clips are damaged or stress-whitened, replace them with new ones.
   - Push the clips and the hooks into place securely.

4-door

1. Remove the cover (A) by releasing the hooks (B). Remove the bolts (C), then remove the trunk lid dynamic damper (D). Take care not to scratch the trunk lid.

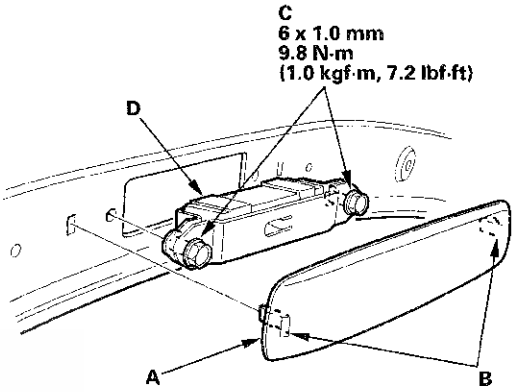

2. Install the damper in the reverse order of removal, and push the hooks into place securely.

Fuel Fill Door Adjustment

1. Slightly loosen the hinge mounting bolts (A).

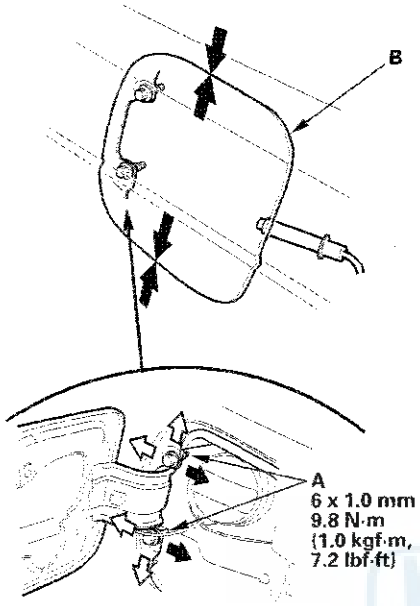

2. Adjust the fuel fill door (B) in or out until is not flush with the body, and up or down as necessary to equalize the gaps.

3. Tighten the hinge mounting bolts.

4. Check that the fuel fill door opens properly and locks securely, and check that the rear of the door is flush with the body.

5. Apply multipurpose grease to each location indicated by the arrows.

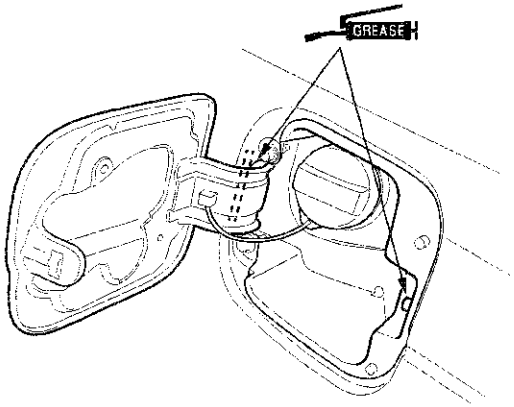

6. Apply touch-up paint to the hinge mounting bolts and around the hinges.

Fuel Cap Adapter Replacement

NOTE: Take care not to scratch the body.

1. Remove the fuel pipe protector (see page 20-277).
2. Remove the fuel cap (A) by turning it counterclockwise, and remove the screw.

Fastener Location

▶ : Screw, 1

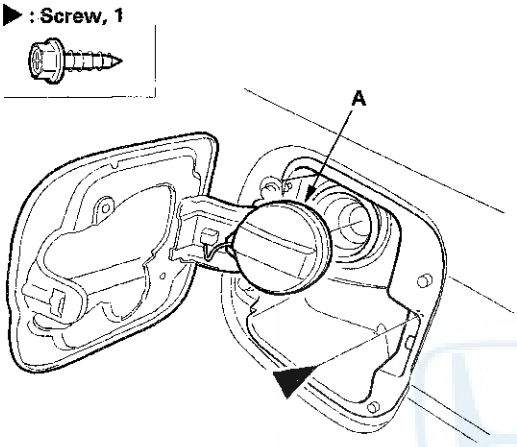

3. Remove the bolts, and lower the fuel filler pipe (A), then remove it from the fuel cap adapter (B).

Fastener Locations

▶ : Bolt, 2

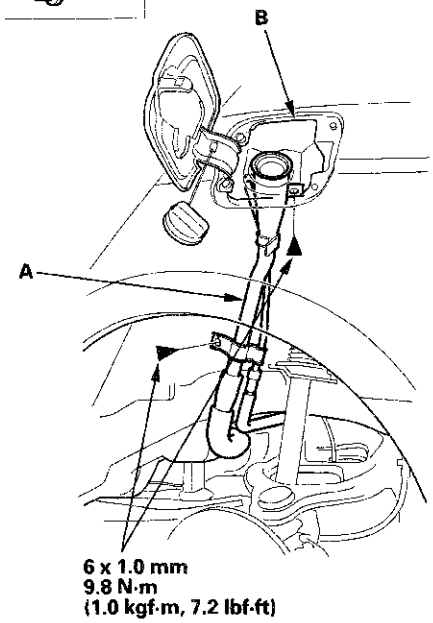

4. Turn the fuel cap adapter (A), then remove it.

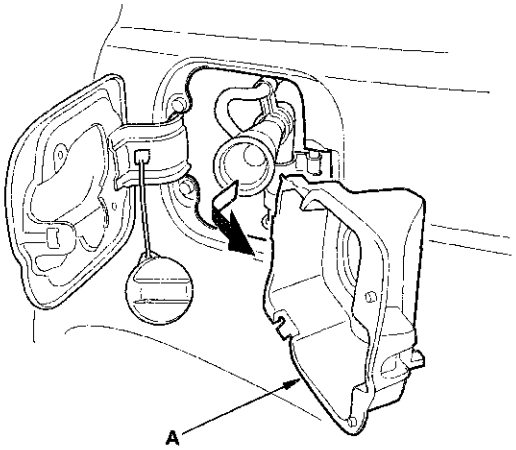

5. Install the adapter in the reverse order of removal, and note these items:
   - Make sure the fuel cap adapter is set the fuel filler pipe properly. Take care not to deform the packing of the fuel cap adapter.
   - Apply medium strength liquid thread lock to the fuel filler pipe mounting bolts before reinstallation.

Front Grille Cover Replacement

2-door

NOTE: Take care not to scratch the front grille and the body.

1. Remove the front grille cover (A).

   -1 Remove the clips (B, C).
   -2 Pass both hood edge cushions (D) through the holes in the cover by pulling the rear edge of the cover up, and slide the entire cover rearward to release the front edge of it from under the front grille (E).
   -3 Pass the hood latch handle (F) through the hole in the cover.

   NOTE: To remove the clips, pry the inner clip pins up at the edge near the line (G) on the clip heads.

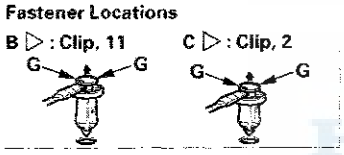

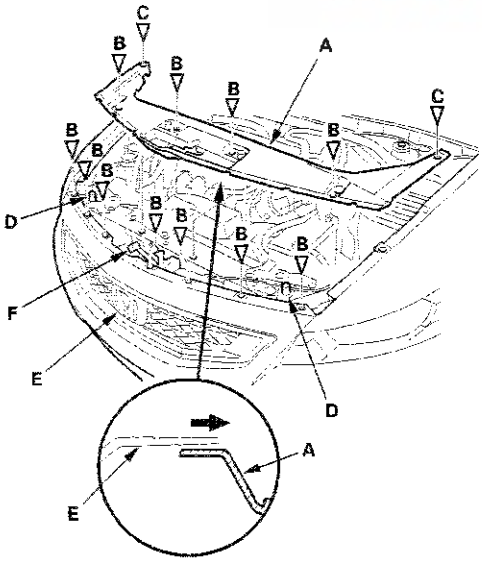

2. Install the cover in the reverse order of removal, and note these items:

   - If the clips are damaged or stress-whitened, replace them with new ones.
   - Push the clips into place securely.

4-door

NOTE: Take care not to scratch the front grille and the body.

1. Remove the front grille cover (A).

   -1 Remove the clips (B, C).
   -2 Detach the hooks (D) from both front fender trim (E).
   -3 Pass both hood edge cushions (F) through the holes in the cover by pulling up the rear edge of the cover, and slide the entire cover rearward to release it from the groove (G) of the front grille (H).
   -4 Pass the hood latch handle (I) through the hole in the cover.

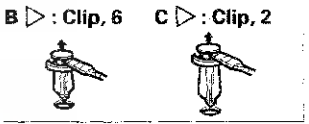

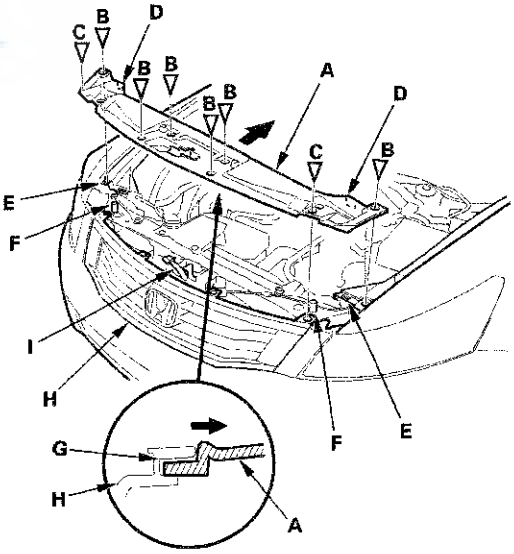

2. Install the cover in the reverse order of removal, and note these items:

   - If the clips are damaged or stress-whitened, replace them with new ones.
   - Push the clips and the hooks into place securely.

Front Grille Replacement

Special Tools Required
KTC trim tool set SOJATP2014 *
* Available through the Honda Tool and Equipment Program; call 888-424-6857

Grille Replacement - 2-door

NOTE: Take care not to scratch the front bumper.

1. Remove the front bumper (see page 20-239).

2. Remove the front grille (A).

   -1 Remove the clips.
   -2 Detach both hooks (B) on the gr ille from the front bumper (C), and release the ribs (D) on the grille from the groove (E) of the bumper by pulling out the grille.

Fastener Locations
▷ : Clip, 10

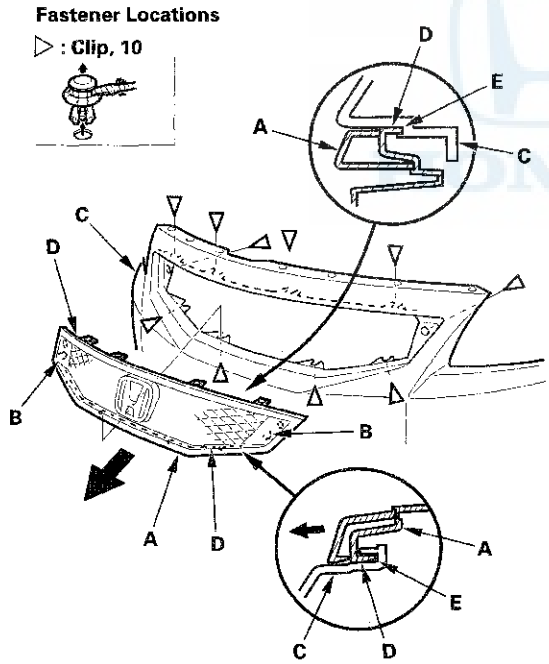

3. Install the grille in the reverse order of removal, and note these items:

   • If the clips are damaged or stress-whitened, and replace them with new ones.
   • Push the clips and the hooks into place securely.

Grille Replacement - 4-door

NOTE: Take care not to scratch the front bumper and the body.

1. Remove the front grille cover (see page 20-257).

2. Remove the front grille (A).

   -1 Remove the clips.
   -2 Detach both hooks (B) on the gr ille from the front bumper (C), and release the ribs (D) on the grille from the groove (E) of the bumper by pulling out the grille.

Fastener Locations
▷ : Clip, 4

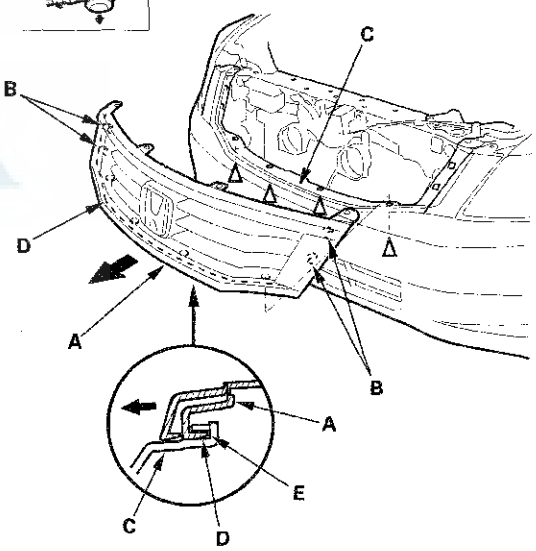

3. Install the grille in the reverse order of removal, and note these items:

   • If the clips are damaged or stress-whitened, and replace them with new ones.
   • Push the clips and the hooks into place securely.

Molding Replacement - 2-door

NOTE: Take care not to scratch the front grille.

1. Remove the front grille.
2. From behind the grille, remove the screws, and pry up the two hooks (A) by using a flat-tip screwdriver wrapped with protective tape, then remove the front grille molding (B) from the front grille base (C).

Fastener Locations

▶ : Screw, 9

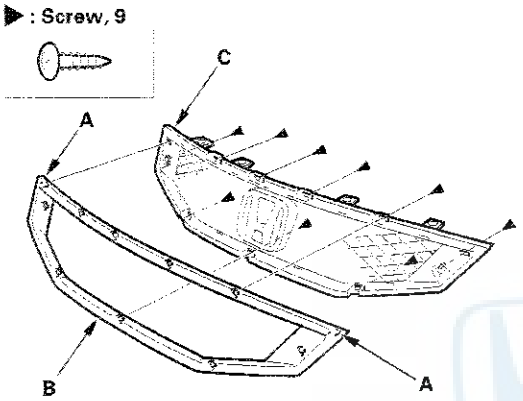

3. Install the molding in the reverse order of removal, and push the hooks into place securely.

Molding Replacement - 4-door

NOTE: Take care not to scratch the front grille.

1. Remove the front grille.
2. From behind the grille, remove the screw, and pry up the hooks (22 places) (A) by using a flat-tip screwdriver wrapped with protective tape, then remove the front grille molding (B) from the front grille base (C).

Fastener Location

▶ : Screw, 1

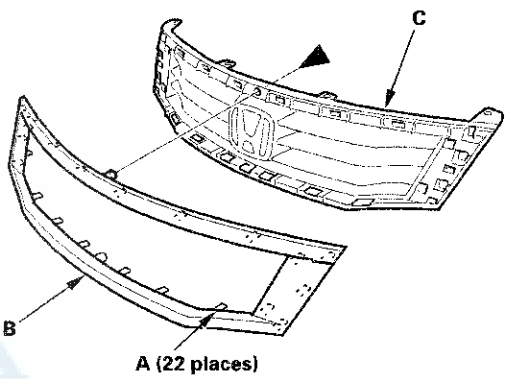

3. Install the molding in the reverse order of removal, and push the hooks into place securely.

Front Fender Trim Replacement

2-door

NOTE:
- Take care not to scratch the front grille cover and the body.
- The left side is shown; the right side is similar.

1. Remove the front fender trim (A).

   -1 Remove the clip (B) from the front grille cover (C).
   -2 Remove the clips (D) securing the trim.
   -3 Pull the trim up to release the projections (E) of the trim from the holes in the body, and pull out the trim from under the front grille cover.

   NOTE: To remove the clips (B), pry the inner clip pins up at the edge near the line (F) on the clip heads.

Fastener Locations

B ▷ : Clip, 1 D ▷ : Clip, 2

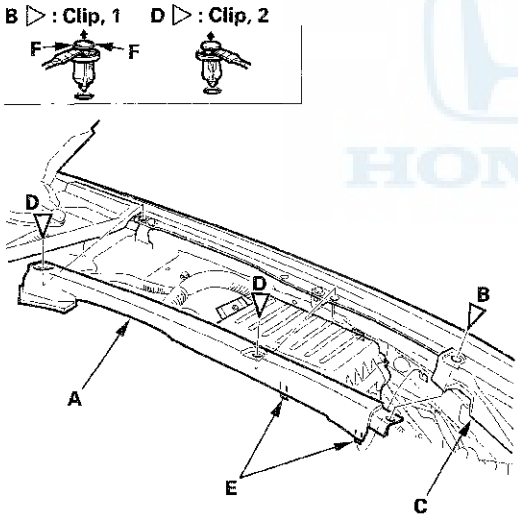

2. Install the trim in the reverse order of removal, and note these items:

   - If the clips are damaged or stress-whitened, and replace them with new ones.
   - Push the clips into place securely.

4-door

NOTE:
- Take care not to scratch the front grille cover and the body.
- The left side is shown; the right side is similar.

1. Remove the front fender trim (A).

   -1 Remove the clips (B, C) from the front grille cover (D).
   -2 Remove the clips (E) securing the trim.
   -3 Pull the front grille cover up to detach the hook (F) from the front fender cover.
   -4 Pull the trim up to release the projections (G) on the trim from the holes in the body.

Fastener Locations

B ▷ : Clip, 1 C, E ▷ : Clip, 3

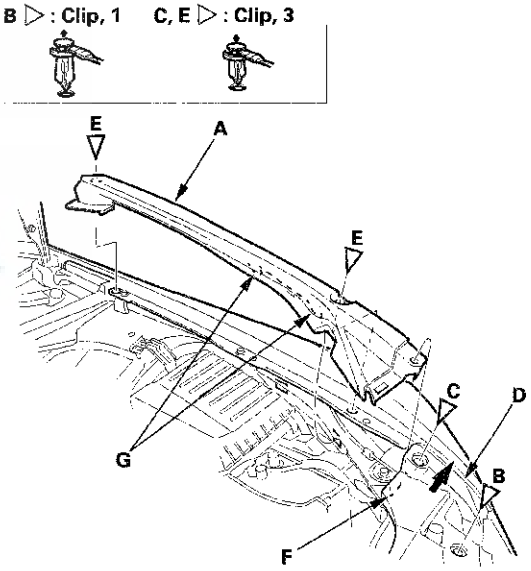

2. Install the trim in the reverse order of removal, and note these items:

   - If the clips are damaged or stress-whitened, and replace them with new ones.
   - Push the clips and the hook into place securely.

Cowl Cover Replacement

Special Tools Required
KTC trim tool set SOJATP2014 *
* Available through the Honda Tool and Equipment Program; call 888-424-6857

Cowl Cover Replacement

NOTE:
- Put on gloves to protect your hands.
- Take care not to damage the body.

1. Remove the windshield wiper arms (see page 22-293).

2. Remove the hood rear seal (A) by pulling it out.

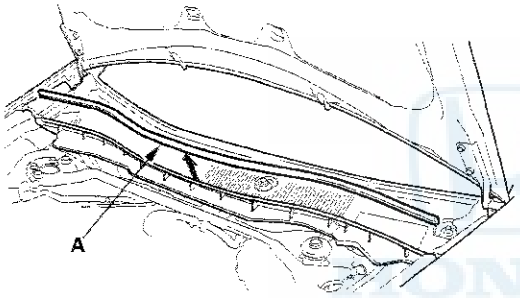

3. Remove the driver's cowl cover (A).

   -1 Remove the clips (B).
   -2 Detach the clips (C) and the hook (D) by carefully pulling up the cover, and detach the hooks (E) from the passenger's cowl cover (F) by carefully pulling up the driver's cowl cover.
   -3 Release the edges of the hood hinge cover (G) from the front fender (H), and release the hinge cover from the roof molding (I).

Fastener Locations

B ▷ : Clip, 2 **C ▷ : Clip, 2 (Blue)**

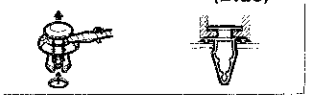

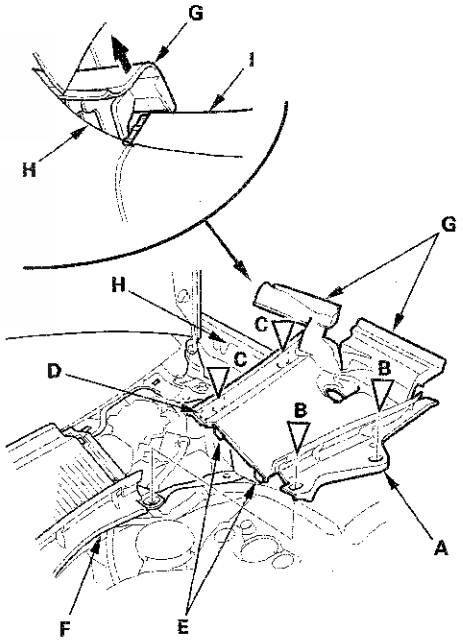

(cont'd)

Cowl Cover Replacement (cont'd)

4. Remove the passenger's cowl cover (A).

   -1 Remove the clips (B).
   -2 Detach the clips (C, D, E) by carefully pulling up the cover.
   -3 Release two front hooks (F) from the body.
   -4 Release the edges of the hood hinge cover (G) from the front fender (H), and release the hinge cover from the roof molding (I).

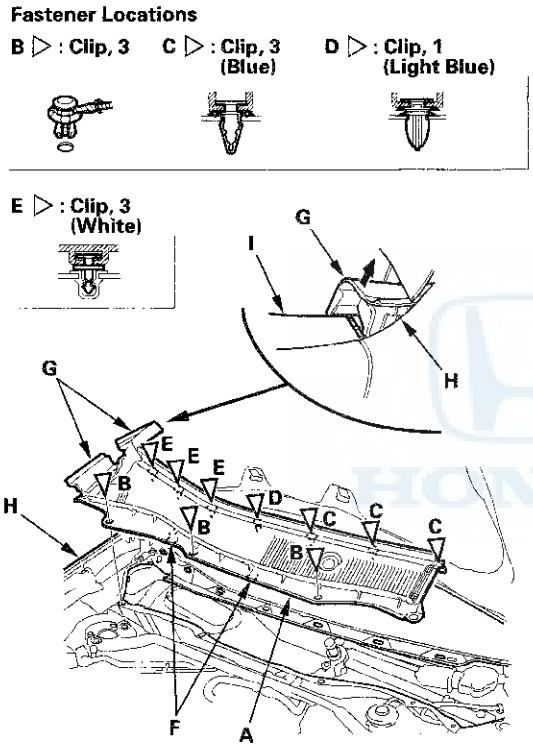

5. Install the covers in the reverse order of removal, and note these items:

   - If the clips are damaged or stress-whitened, replace them with new ones.
   - Push the clips into place securely.
   - Make sure the hood hinge cover is seated on the cowl cover securely.

Hood Hinge Cover Replacement

NOTE:
- Put on gloves to protect your hands.
- Take care not to damage the body.

1. Remove the hood hinge cover (A) by pulling it out to detach the projections (B) (11 places) and the projection (C) (one place) from the cowl cover (D).

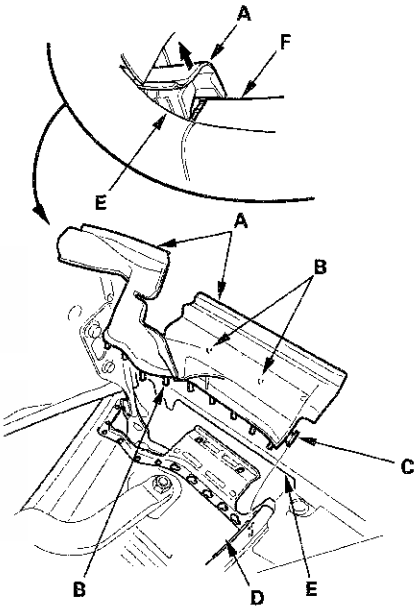

2. Release the edges of the hinge cover from the front fender (E), and release the hinge cover from the roof molding (F).

3. Install the cover in the reverse order of removal, and note these items:

   - Push the projections into place securely.
   - Make sure the hood hinge cover is seated on the cowl cover securely.

Roof Molding Replacement

Special Tools Required
KTC trim tool set SOJATP2014 *
* Available through the Honda Tool and Equipment Program; call 888-424-6857

Molding Replacement

NOTE:
- Put on gloves to protect your hands.
- Take care not to damage the windshield.
- Do not use any metallic tools to remove the windshield portion of the roof molding, or you may chip or crack the windshield.
- Use the appropriate tool from the KTC trim tool set to avoid damage when removing components.
- Take care not to bend the roof molding.

1. Release the hood hinge cover (A) from the bottom edge of the roof molding (B) and under the front fender (C).

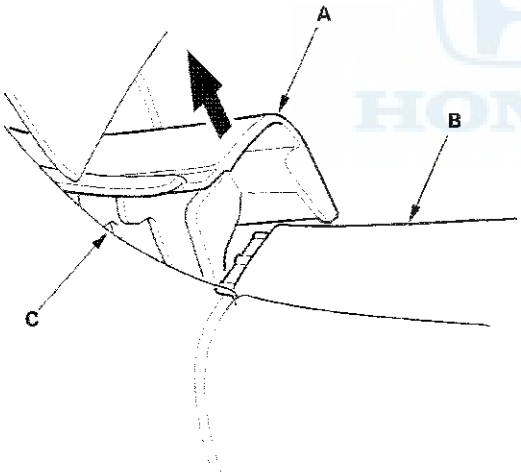

2. Remove the windshield portion of the roof molding (A).

   1. Carefully insert the large trim tool (B) and the plastic spatula (C) in under the molding next to the lower clip (D).
   2. While pulling up the clip portion of the molding by hand, push each of the six small hooks (E) in the numbered sequence shown to release the clip from the retainer (F) on the A-pillar. Do not pry up on the clip or the molding.
   3. Gradually work your way up to release each of the upper clips (G, H, I).

2-door

Fastener Locations
D ▷ : Clip (Green)
G ▷ : Clip (Blue)
H ▷ : Clip (Purple)
I ▷ : Clip (Gray)

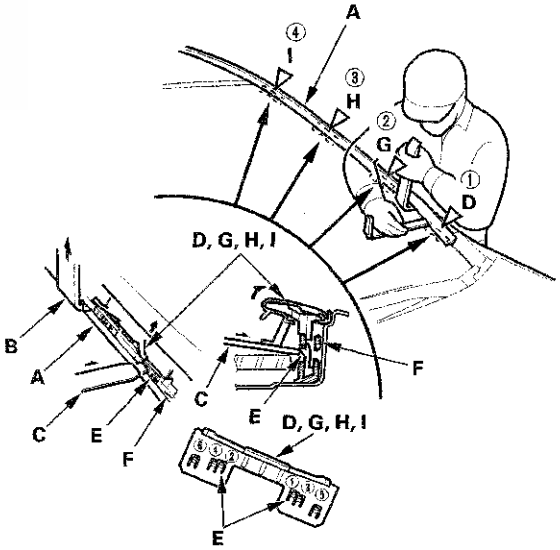

(cont'd)

Roof Molding Replacement (cont'd)

4-door

Fastener Locations

D ▷ : Clip (White)
G ▷ : Clip (Orange)
H ▷ : Clip (Red)
I ▷ : Clip (Blue)

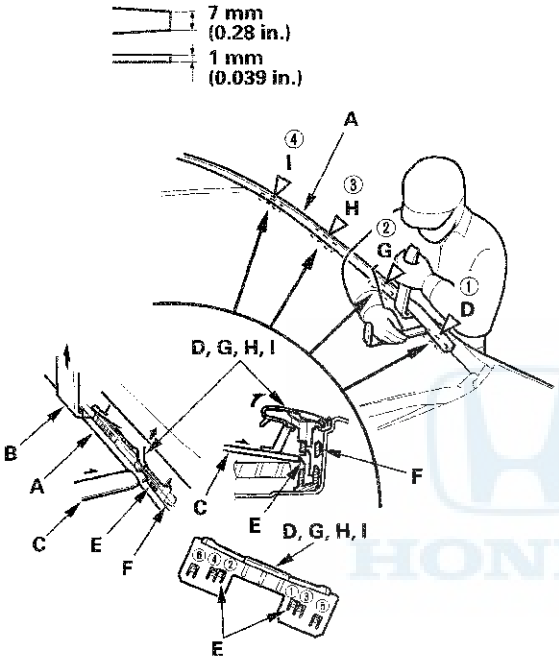

3. Pull up the roof portion of the roof molding (A) to release it from the retainers (B).

Fastener Locations

B ▷ : Retainer, 3 (White)

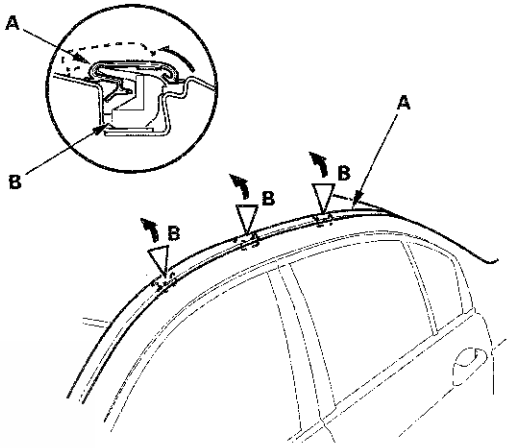

4. Pull up and release the rear end of the roof molding (A) from the pin (B) on the body, then remove the roof molding.

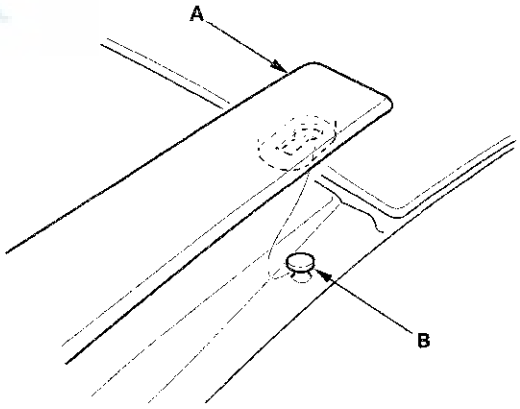

5. Install the molding in the reverse order of removal, and note these items:

- Make sure the roof molding is installed securely.
- If the clips are damaged or stress-whitened, replace them with new ones.

Retainer Replacement (Windshield Portion - Adhesive Type)

1. Gradually scrape off the adhesive tape (A) under the retainers (B) while heating it with a heat gun to 212—248 °F (100—120 °C).

   NOTE:
   - To prevent damage, do not heat the painted surface around the retainers too much.
   - To keep the exterior plastic parts near the A-pillar from being overheated by the heat gun, wrap them with aluminum foil.

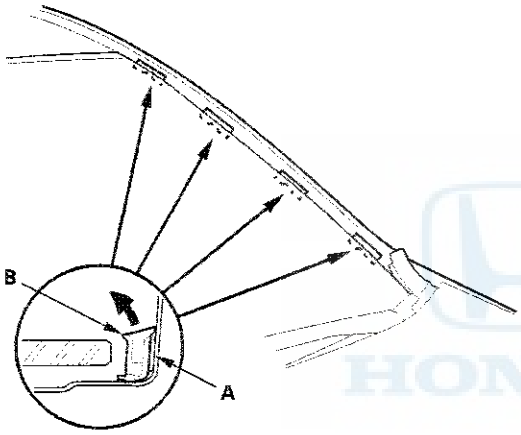

2. Clean the body bonding surface with a shop towel dampened in 3M General Purpose Adhesive Cleaner (08987) or isopropyl alcohol. After cleaning, keep oil, grease, and water from getting on the surface.

3. Install the upper retainer (A) and lower retainers (B).

   -1 Remove the factory-applied adhesive from the retainers.
   -2 Wipe the retainer bonding surfaces with 3M Automotive Adhesion Promoter (06396), and allow to dry for at least 5 minutes.
   -3 Apply an 80 mm (3.2 in.) strip of 3M Automotive Acrylic Plus Attachment Tape (06386) to each retainer.
   -4 Wipe the body bonding surfaces with 3M Automotive Adhesion Promoter (06396), and allow to dry for at least 5 minutes.
   -5 Line up the retainers with the alignment marks (C) on the body. Peel the protective cover off the adhesive tape (D), and attach the retainers to the body.

   NOTE:
   - Do not apply epoxy or any other substance to the retainers except the specified adhesion promoter and double-sided tape.
   - The adhesive tape requires at least 24 hours to fully adhere. Do not pull on the windshield side trim for at least 24 hours after installation.

   Adhesive tape: Thickness 1 mm (0.04 in.)
   Width 8 mm (0.32 in.)

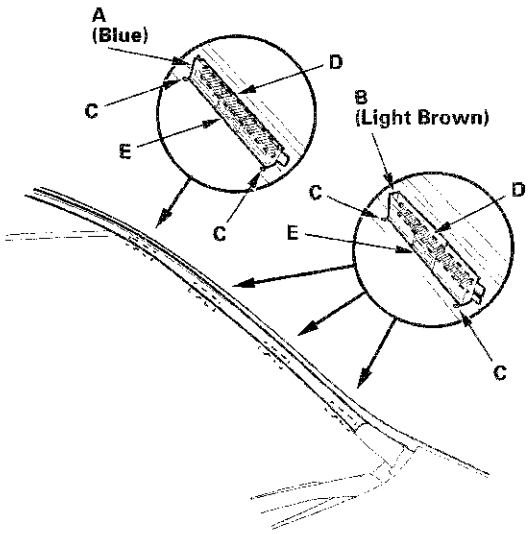

(cont'd)

Roof Molding Replacement (cont'd)

Retainer Replacement (Windshield Portion - Pin Type)

1. While prying the middle hooks (A) with a flat-tip screwdriver, slide the upper retainer (B) and the lower retainers (C) upward to release them from the pins (D) on the A-pillar. Take care not to scratch the body or damage the windshield.

2-door

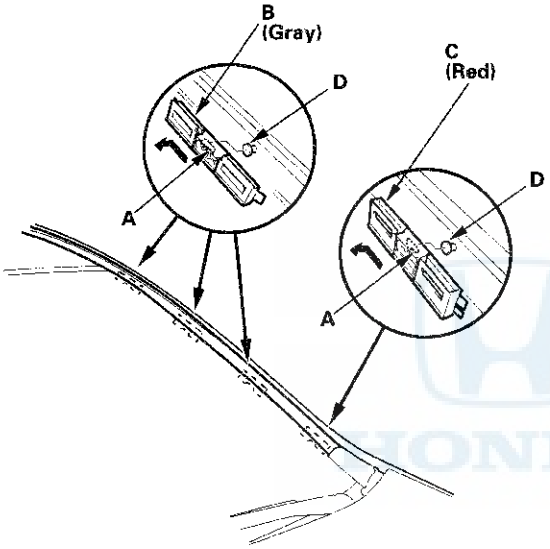

4-door

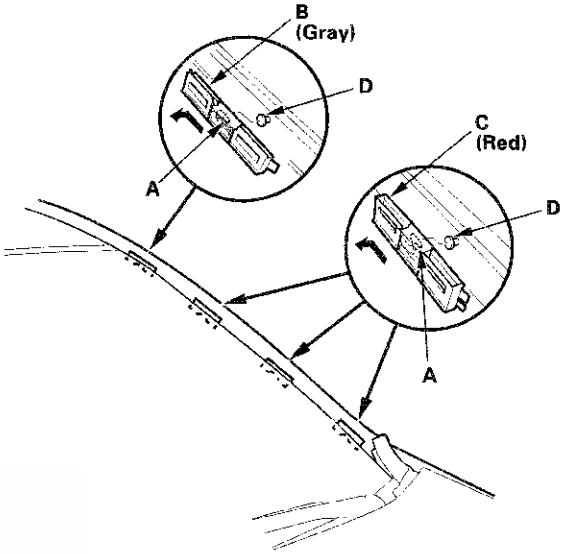

2. Install the retainers in the reverse order of removal.

Retainer Replacement (Roof Portion)

1. While prying the middle hooks (A) with a flat-tip screwdriver, slide the retainers (B) rearward to release them from the T-studs (C) on the body. Take care not to scratch the body.

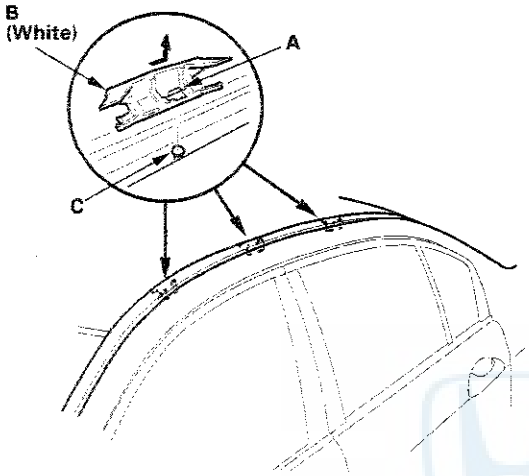

2. Install the retainers in the reverse order of removal.

Side Sill Protection Tape Replacement

2-door

1. Slowly remove the old side sill protection tape.
2. Clean the body bonding surface with a shop towel dampened in isopropyl alcohol. After cleaning, keep oil, grease, and water from getting on the surface.
3. Remove the adhesive backing B from the side sill protection tape (C).

   NOTE: Do not remove adhesive backing A.

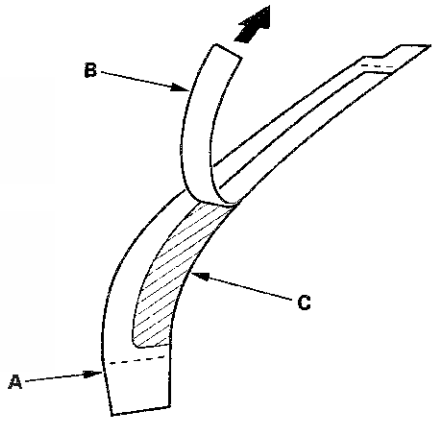

(cont'd)

Side Sill Protection Tape Replacement (cont'd)

4. Align the corner (A) of the adhesive backing (B) with the body line (C). Then align adhesive backing edge (D) with body line (E). Press the exposed adhesive portion the sill protection tape (F) against the body.

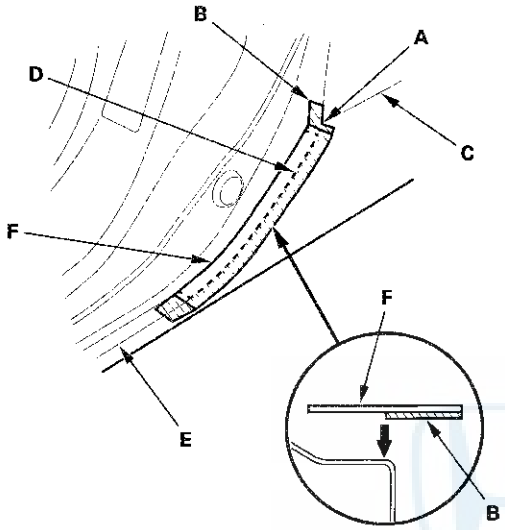

5. Remove the adhesive backing A from the side sill protection tape (B), and press the tape into place.

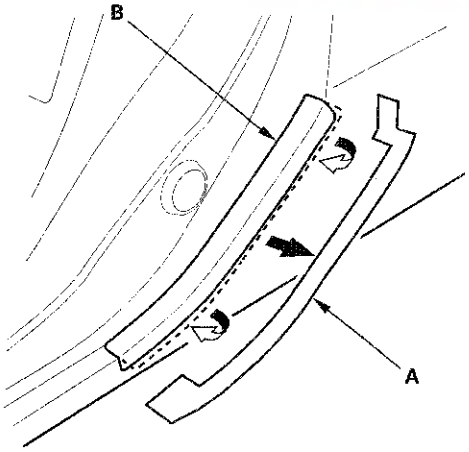

4-door

1. Slowly remove up the old side sill protection tape.
2. Clean the body bonding surface with a shop towel dampened in isopropyl alcohol. After cleaning, keep oil, grease, and water from getting on the surface.
3. Remove the adhesive backing B from the side sill protection tape (C).

   NOTE: Do not remove the adhesive backing A.

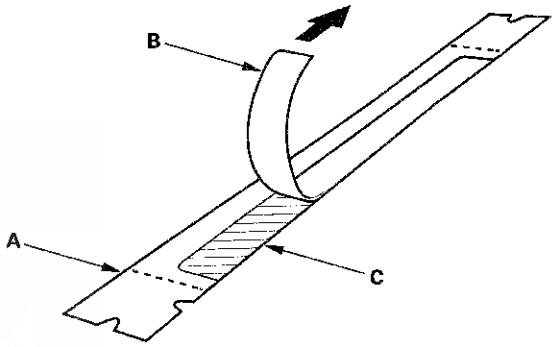

4. Align the alignment marks (A) of the adhesive backing (B) with the body line (C). Then align the alignment mark (D) on the adhesive backing with the round body bulge (E). Press the exposed adhesive portion of sill protection tape (F) against the body.

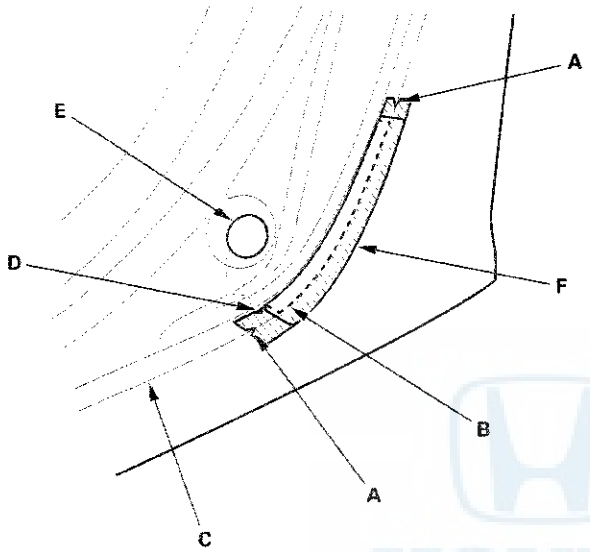

5. Remove the adhesive backing A from the side sill protection tape (B), and press the tape into place.

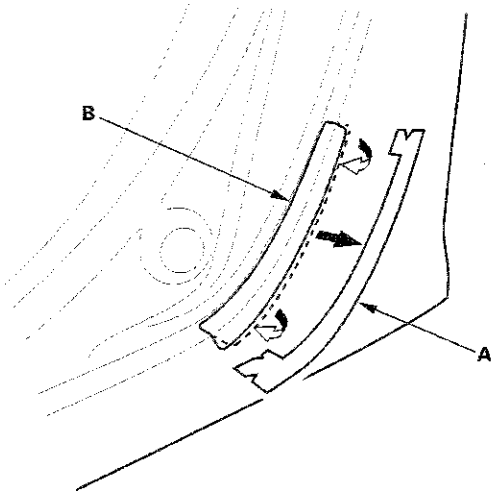

Trunk Lower Trim Replacement

4-door

NOTE:
- Put on gloves to protect your hands.
- Take care not to scratch the trunk lid.

1. Remove the license plate from the trunk lid.

2. Remove the clips fastening the trunk lower trim (A).

Fastener Locations

▷ : Clip, 2

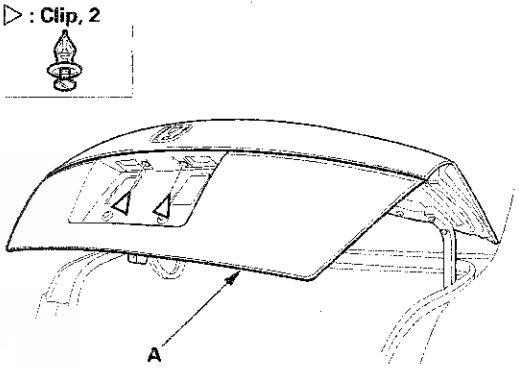

3. Remove the bolts from inside the trunk lid.

Fastener Locations

▶ : Bolt, 4

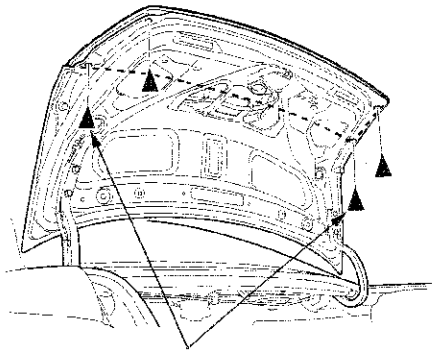

6 x 1.0 mm
9.8 N·m (1.0 kgf·m, 7.2 lbf·ft)

(cont'd)

Trunk Lower Trim Replacement (cont'd)

4. While gently pulling out on the bottom edge of the trunk lower trim (A), cut the double-sided adhesive tape (B) in the bottom edge of the trim. Take care not to scratch the trunk lid.

Fastener Locations

C ▷ : Clip, 4 **D ▷ : Clip, 1**

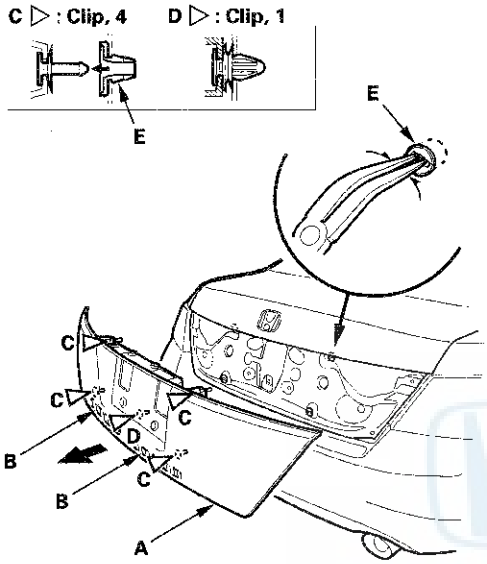

5. Pull the trim out to release the clips (C, D), then remove the trim from the trunk lid.

6. If the clips are damaged or stress-whitened, replace them with new ones.

7. Remove the grommets (E) from the trunk lid, then insert the grommets into the clips on the trunk lower trim.

8. Carefully remove the remaining double-sided adhesive tape and bottom EPDM sponge (foam rubber) from the trim. Also, carefully remove the remaining double-sided adhesive tape from the trunk lid. Clean the trim and trunk lid surfaces with a shop towel dampened in isopropy alcohol.

9. Attach the new double-sided adhesive tape (A) and the new bottom EPDM sponge (foam rubber) (B) to the bottom of the trim (C).

Double-sided adhesive tape:
Thickness 1.2 mm (0.047 in.)
Width 15 mm (0.59 in.)
Length 250 mm (9.84 in.)

EPDM sponge: **Thickness 3 mm (0.12 in.)**
Width 4 mm (0.16 in.)
Length 250 mm (9.84 in.)

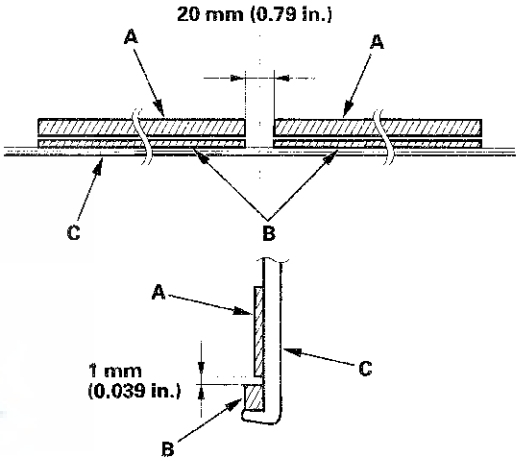

10. Fold the edge of each adhesive backing from the double-sided adhesive tape.

11. Hold the trim up, and fit the clips into the hole in the trunk lid, then push on the trim until the clips snap into place securely.

12. Reinstall the bolts and the clips, and loosely thread the bolts.

    NOTE: Apply medium strength liquid thread lock to the bolts before reinstallation.

13. Carefully pull the adhesive backing away, and push on the double-sided adhesive tape portions to make adhesive stick securely.

14. Tighten the bolts to the specified torque.

15. Reinstall the rear license plate.

Emblem/Sticker Replacement

2-door

NOTE: When removing emblems/sticker, take care not to scratch the body.

1. To remove the front "H" emblem, remove the front bumper (see page 20-239).
2. Clean the body surfaces where emblems/sticker are applied with a shop towel dampened in isopropyl alcohol. After cleaning, keep oil, grease, and water from getting on the surface.
3. Apply the emblems/sticker where shown. When installing the ULEV/PZEV sticker on the inside surface of the left quarter glass, align the sticker with the edge of the black ceramic as shown, and press the sticker into place, then remove the application tape.

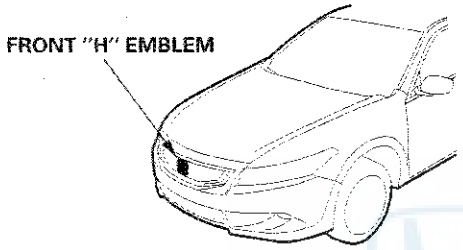

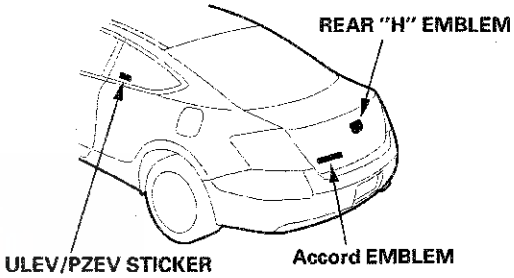

Unit: mm (in.)
Adhesive tape: Thickness 0.8 mm (0.03 in.)

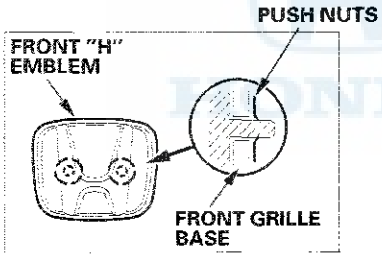

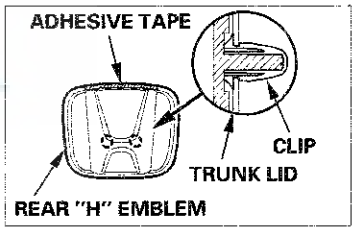

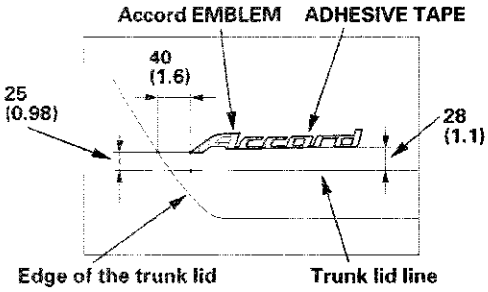

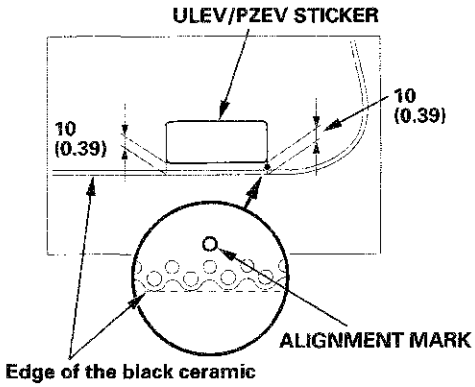

Emblem/Sticker Replacement (cont'd)

4-door

NOTE: When removing emblems/sticker, take care not to scratch the body.

1. To remove the front "H" emblem, remove the front grille (see page 20-258).
2. Clean the body surfaces where emblems/sticker are applied with a shop towel dampened in isopropyl alcohol. After cleaning, keep oil, grease, and water from getting on the surface.
3. Apply the emblems/sticker where shown. When installing the ULEV/PZEV sticker on the inside surface of the left rear door quarter glass, align the sticker with the edge of the glass mark and the rear door quarter glass seal as shown, and press the sticker into place, then remove the application tape.

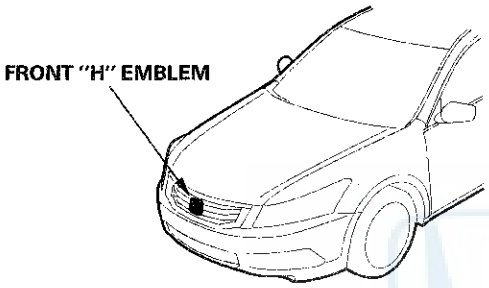

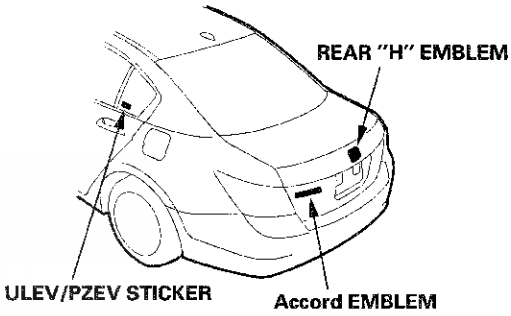

Unit: mm (in.)
Adhesive tape: Thickness 0.8 mm (0.03 in.)

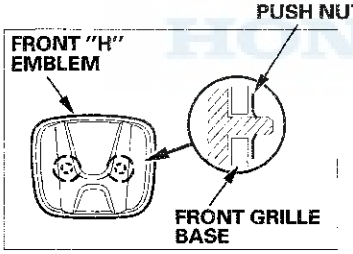

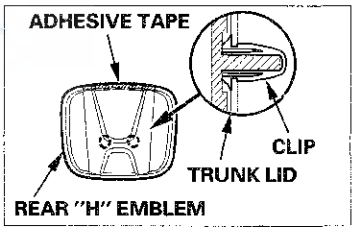

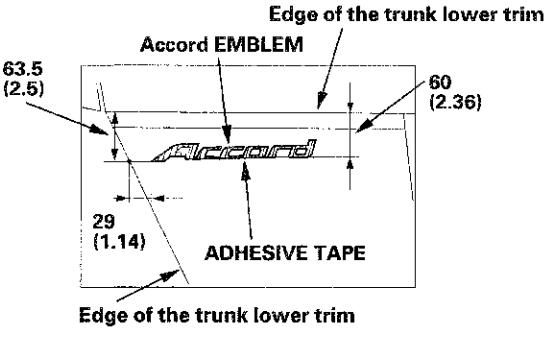

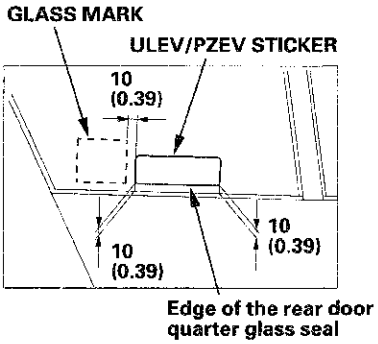

Front Inner Fender Replacement

NOTE:
- Put on gloves to protect your hands.
- Take care not to scratch the body.

1. Remove the front inner fender (A).

   -1 On the back of the wheel arch, remove the screws (B) and the clip (C), and remove the front splash guard (D) (Canada models).
   -2 From under the front bumper (E), remove the clip (F) securing the front bumper, the splash shield (G), and the front inner fender, and remove the clips (H) securing the front bumper and the inner fender.
   -3 From the wheel arch, remove the clips (I, J, K) that secure the front inner fender (and splash shield) to the body.
   -4 From the wheel arch, remove the clip (L) that secure the front inner fender to the resonator chamber (left side) or the body (right side).
   -5 Release the hook (M) of the splash shield, then remove the front inner fender.

   NOTE: To remove the clips (C, F, H, I, K, L), pry the inner clip pins up at the edge near the line (N) on the clip heads.

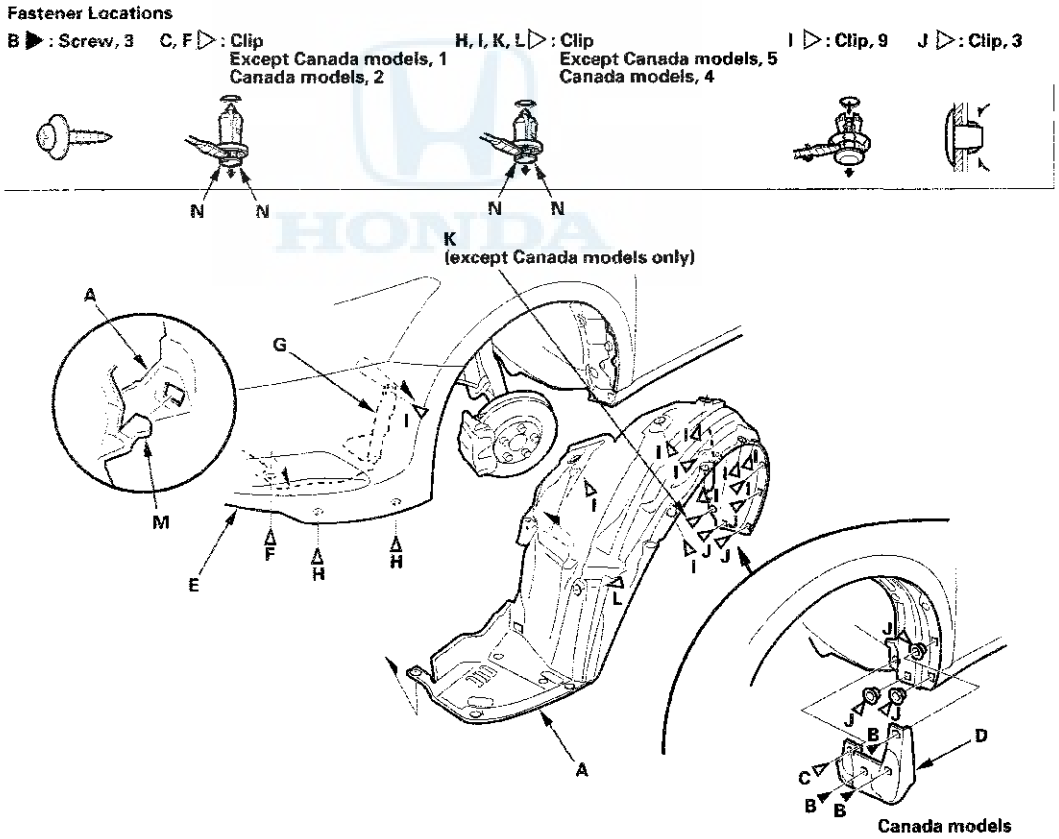

2. Install the inner fender in the reverse order of removal, and note these items:

   - If the clips are damaged or stress-whitened, replace them with new ones.
   - Push the clips into place securely.

Front Splash Shield Replacement

NOTE:
- Put on gloves to protect your hands.
- Take care not to scratch the body.
- 4-door is shown; 2-door is similar.

1. Remove the front splash shield (A).

   -1 Remove the clip (B) that secures the front splash shield to the body.
   -2 Remove the clips (C) that secure the front inner fender (D) and the front splash shield to the body.
   -3 From under the front bumper (E), remove the clips (F) that secure the front bumper, the front inner fender, and the front splash shield to the body.
   -4 From under the front bumper, remove the clips (G) that secure the front bumper and the front splash shield to the body.
   -5 From under the body, remove the clips (H) that secure the front splash shield to the front subframe.
   -6 Release the hooks (I) of the front splash shield, then pull the splash shield out.

   NOTE: To remove the clips, pry the inner clip pins up at the edge near the line (J) on the clip heads.

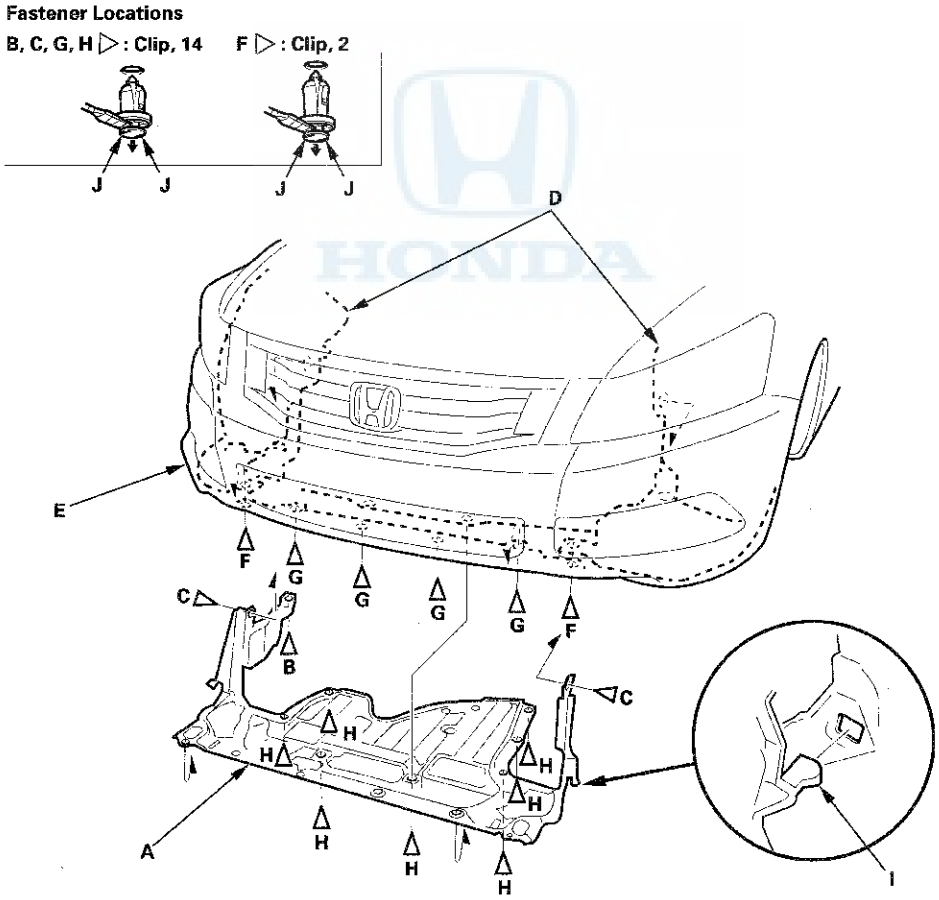

2. Install the splash shield in the reverse order of removal, and note these items:

   - If the clips are damaged or stress-whitened, replace them with new ones.
   - Push the clips into place securely.

Front Fender Fairing Replacement

For Some Models

NOTE:
- Take care not to scratch the body.
- Put on gloves to protect your hands.

1. Remove the front inner fender as needed (see page 20-273).

2. From the wheel arch, release the clips fastening the front fender fairing (A).

Fastener Locations

▷ : **Clip, 2**

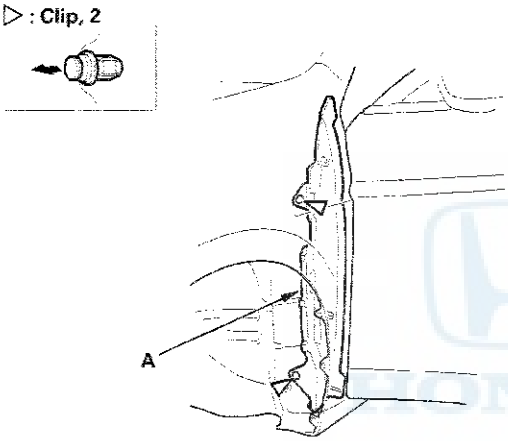

3. Open the front door. Detach the hooks (A) fastening the front fender fairing (B).

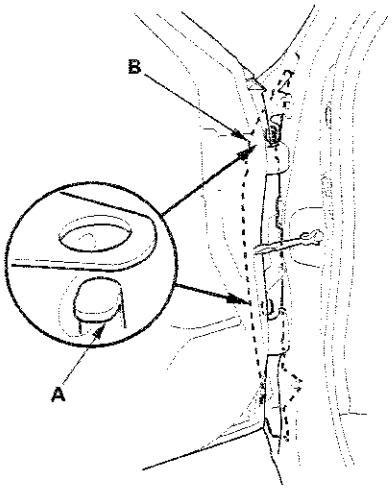

4. Remove the front fender fairing (A).

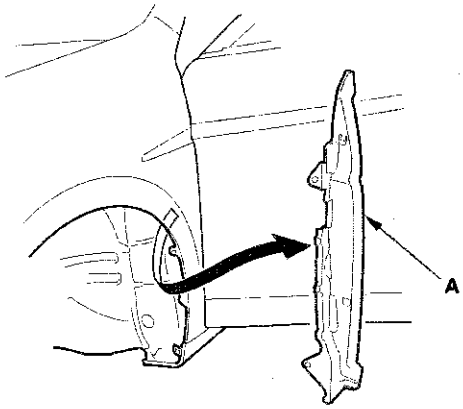

5. Install the fender fairing in the reverse order of removal, and note these items:

   - If the clips are damaged or stress-whitened, replace them with new ones.
   - Push the clips and the hooks into place securely.

Middle Floor Undercover Replacement

NOTE:
- Put on gloves to protect your hands.
- Take care not to scratch the body.

1. Remove the bolts and the nut, and release the hooks (A), then remove the left middle floor undercover (B) and the right middle floor undercover (C).

Left side

Fastener Locations

▶ : Bolt, 4

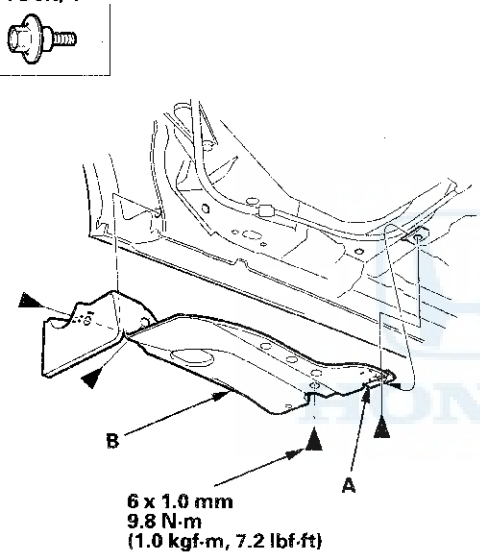

Right side

Fastener Locations

▶ : Bolt, 4 ● : Nut, 1

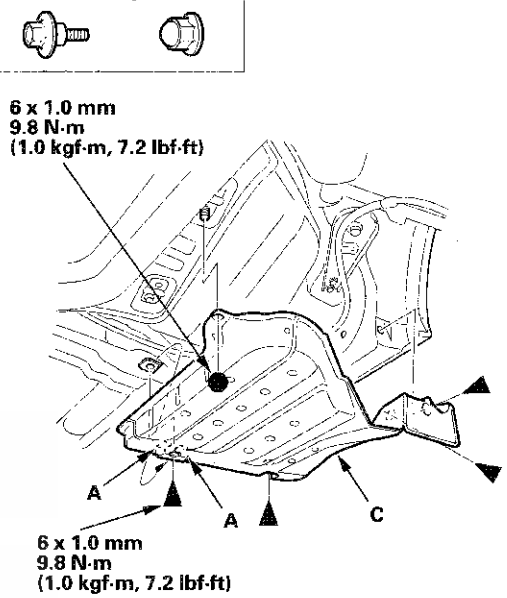

2. Install the undercover in the reverse order of removal, and first attach the hooks, and set the bolts starting at the rear.

Fuel Pipe Protector Replacement

NOTE:
- Put on gloves to protect your hands.
- Take care not to scratch the body.

1. Remove the left rear wheel (see page 18-39).

2. Remove the clips, then remove the fuel pipe protector (A).

Fastener Locations

▷ : **Clip, 3**

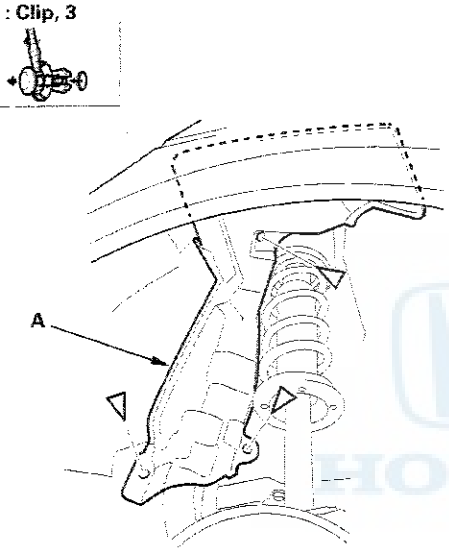

3. Install the protector in the reverse order of removal, and note these items:

   - If the clips are damaged or stress-whitened, replace them with new ones.
   - Push the clips into place securely.

Rear Inner Fender Replacement

NOTE: Take care not to scratch the rear bumper and the body.

1. Remove the screws, then remove the rear fender cover (A) from the rear bumper (B) and the body.

Fastener Locations

▶ : **Screw, 3**

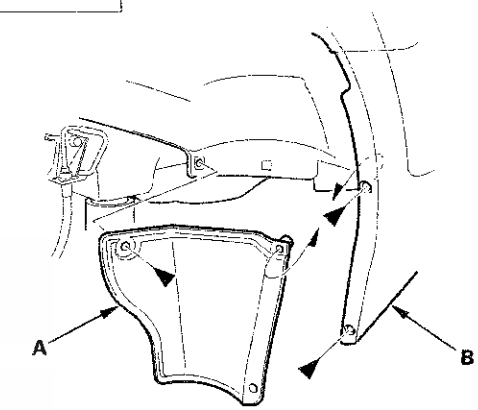

2. Install the fender cover in the reverse order of removal.

Rear Air Outlet Replacement

1. Remove the rear bumper (see page 20-244).
2. Detach the hooks (A), then remove the rear air outlet (B). Take care not to scratch the body.

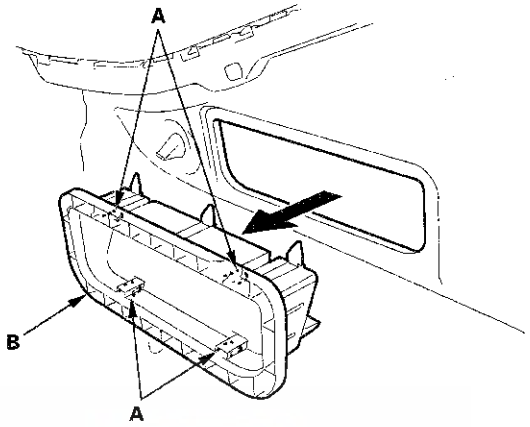

3. Install the air outlet by pushing on the hook portions until the hooks snap into place.

Component Location Index

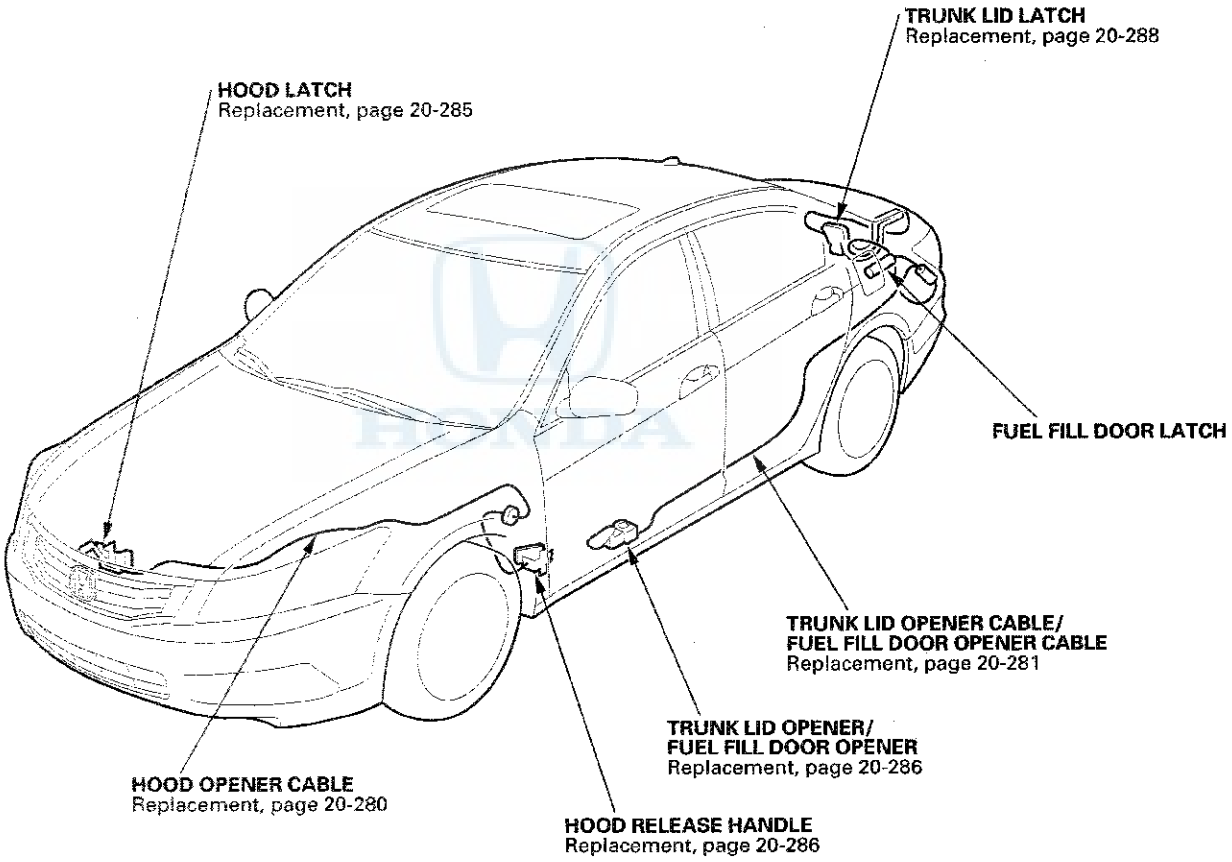

Hood Opener Cable Replacement

NOTE:
- Put on gloves to protect your hands.
- Take care not to scratch the body and the related parts.

1. Remove these items:

   - Front grille cover:
     – 2-door (see page 20- 257)
     – 4-door (see page 20- 257)
   - Front fender trim, left side:
     – 2-door (see page 20- 260)
     – 4-door (see page 20- 260)
   - Front inner fender, left side as needed (see page 20-273)
   - Kick panel, driver's side:
     – 2-door (see page 20-97)
     – 4-door (see page 20-99)

2. Disconnect the hood opener cable (A) from the hood latch (B) (see page 20-285). Take care not to kink the cable.

Fastener Locations

▷ : **Clip, 6**

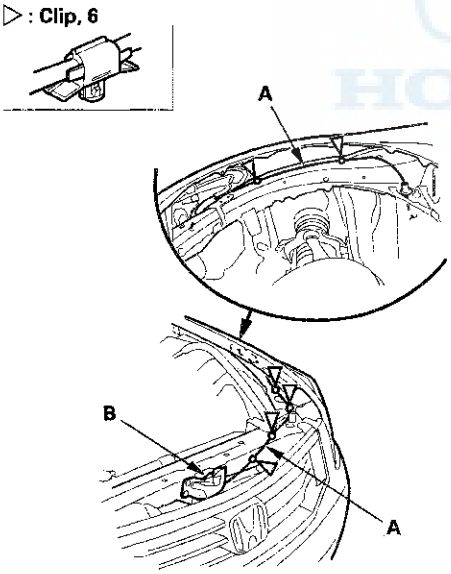

3. Using a clip remover, detach the clips. Take care not to kink the cable.

4. Disconnect the hood opener cable (A) from the hood release handle (B) (see page 20-286). Take care not to kink the cable.

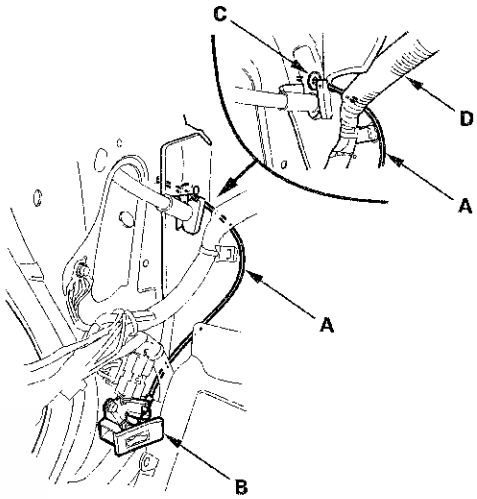

5. Remove the grommet (C) from the body, then remove the hood opener cable from the vehicle. Take care not to kink the cable.

6. Install the cable in the reverse order of removal, and note these items:

   - If the clips are damaged or stress-whitened, replace them with new ones.
   - When installing the opener cable under the dashboard, route the cable under the left engine compartment wire harness (D).

Trunk Lid Opener Cable/Fuel Fill Door Opener Cable Replacement

SRS components are located in this area. Review the SRS component locations, 2-door (see page 24-21), 4-door (see page 24-19) and the precautions and procedures (see page 24-23) before doing repairs or service.

NOTE:
- Put on gloves to protect your hands.
- Take care not to scratch the body and the related parts.

1. Remove these items:

   - Rear seat cushion (see page 20-225)
   - Rear seat side bolster, 4-door (see page 20-225)
   - Front door sill trim, driver's side:
     - 2-door (see page 20-97)
     - 4-door (see page 20-99)
   - Rear door sill trim, both sides, 4-door (see page 20-100)
   - B-pillar lower trim, 4-door (see page 20-107)
   - Rear side trim panel, 2-door (see page 20-118)
   - Trunk side trim panel, left side (see page 20-123)
   - Rear wheelhouse insulator (see step 10 on page 20-125)
   - Fuel cap adapter (see page 20-256)

2. Pull the carpet back as needed.

3. Disconnect the trunk lid opener cable/fuel fill door opener cable (A) from the trunk lid opener/fuel fill door opener (B) (see page 20-286). Take care not to kink the cable.

2-door

Fastener Locations

C ▷ : Clip, 1 **D ▷ : Cushion tape, 1**

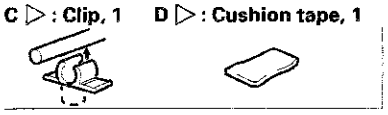

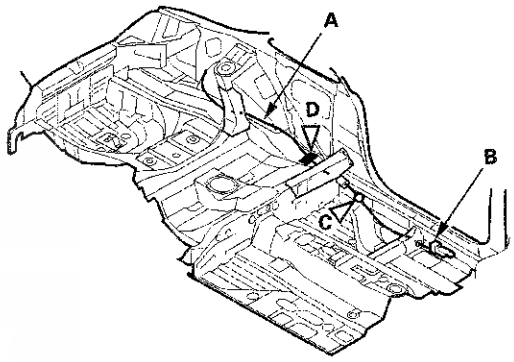

4-door

Fastener Location

C ▷ : Clip, 1

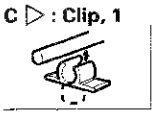

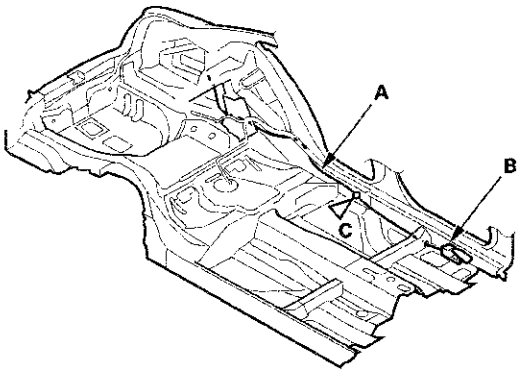

4. Release the opener cable from the clip (C). 2-door: Remove the cushion tape (D).

(cont'd)

Trunk Lid Opener Cable/Fuel Fill Door Opener Cable Replacement (cont'd)

5. 2-door: Remove the trunk lid opener cable/fuel fill door opener cable (A) from the trunk compartment and the trunk lid.

   -1 Detach the opener cable junction box (B) from the body.
   -2 Release the trunk lid opener cable/fuel fill door opener cable from the clip (C), and remove the cushion tape (D).
   -3 Disconnect the trunk lid opener cable (E) from the trunk lid latch (F) (see page 20-288).
   -4 Release the trunk lid opener cable from the clips (G).

Fastener Locations

C ▷ : Clip, 1 D ▷ : Cushion tape, 1 G ▷ : Clip, 6

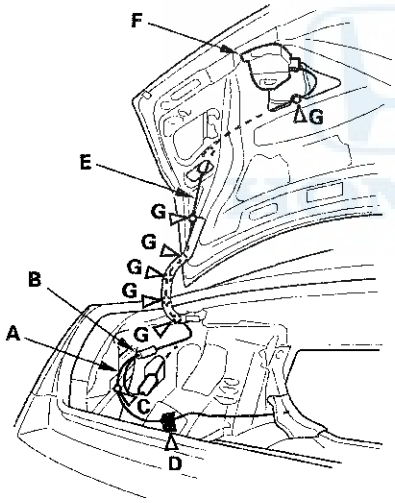

6. 4-door: Remove the trunk lid opener cable/fuel fill door opener cable (A) from the trunk compartment and the trunk lid.

   -1 Detach the clip (B) and the opener cable junction box (C) from the body, and remove the cushion tape (D).
   -2 Disconnect the trunk lid opener cable (E) from the trunk lid latch (F) (see page 20-288).
   -3 Release the trunk lid opener cable from the clips (G), and detach the clip (H).

Fastener Locations

B, H ▷ : Clip, 2 D ▷ : Cushion tape, 1 G ▷ : Clip, 5

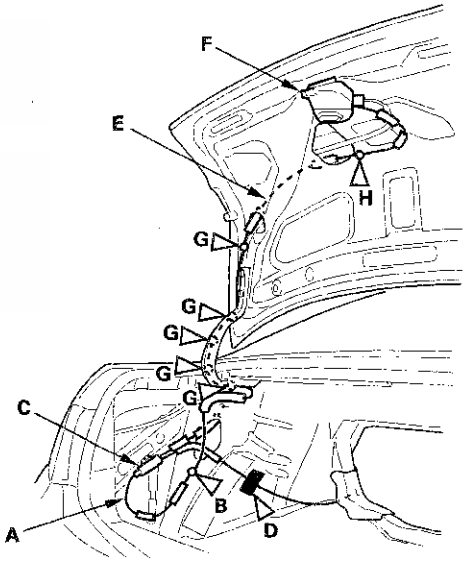

7. While pinching the hooks (A) from inside the vehicle, remove the grommet (B) by releasing the seal (C) from the body.

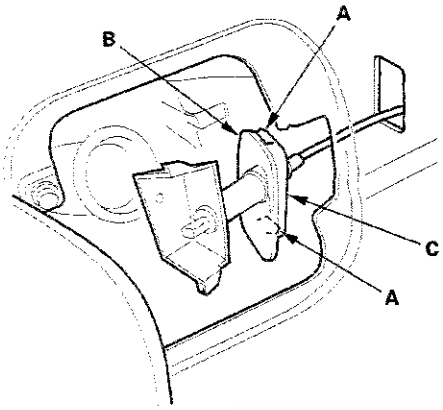

8. Release the hook (A), then remove the grommet (B) from the fuel fill door latch (C).

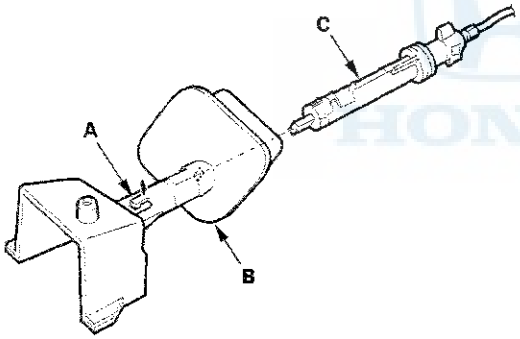

9. Remove the fuel fill door opener cable from inside the body.

10. Remove the trunk lid opener cable/fuel fill door opener cable from the vehicle. Take care not to kink the cable.

11. Install the opener cable in the reverse order of removal, and note these items:

- Replace any damaged clips, and replace the cushion tape.
- Align the marks (A) on the opener cable (B) with the cable clips (C) and the cushion tape (D) as shown.
- 4-door: Route the opener cable beside the harness clips (E) correctly.
- 4-door: Apply the cushion tape (F) as shown.
- Before installing the grommet, clean the body bonding surface with isopropyl alcohol.
- Install the grommet by pushing on the hook portions until the hooks snap into place.

2-door

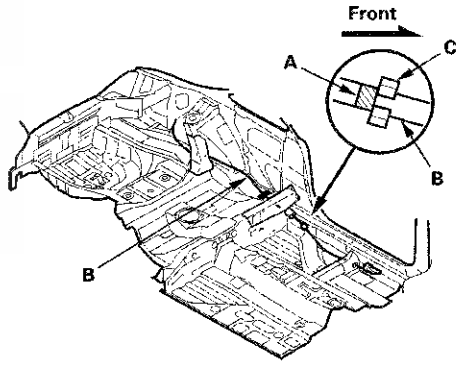

4-door

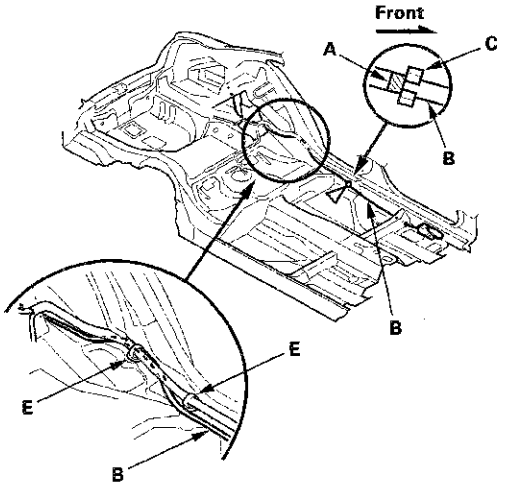

(cont'd)

Trunk Lid Opener Cable/Fuel Fill Door Opener Cable Replacement (cont'd)

2-door

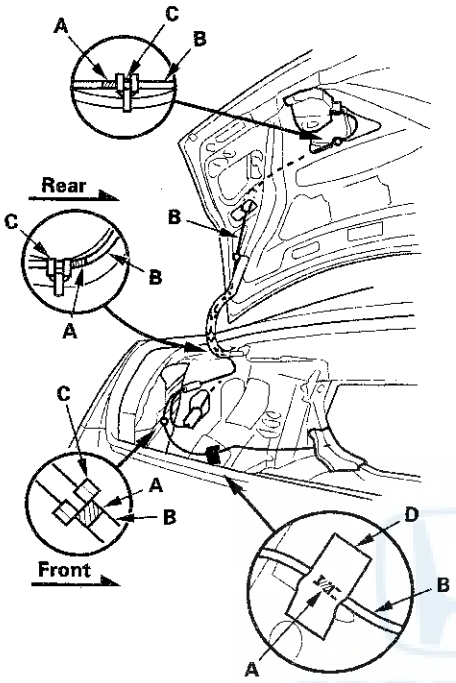

4-door

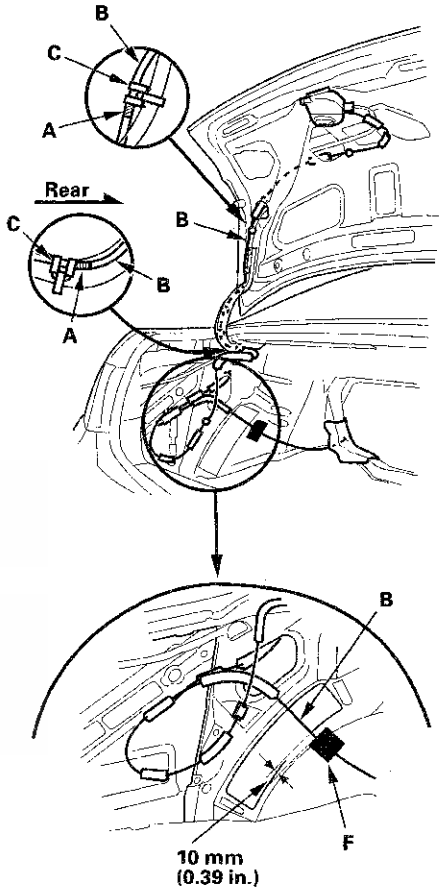

Hood Latch Replacement

NOTE:
- Put on gloves to protect your hands.
- Take care not to scratch the body and the related parts.

1. Remove the front grille cover:

   - 2-door (see page 20-257)
   - 4-door (see page 20-257)

2. 4-door: Remove the hood latch cover (A).

   -1 Detach the clips by pulling back the cover.
   -2 Release the hook (B) by lowering the cover.

Fastener Locations

▷ : **Clip, 2**

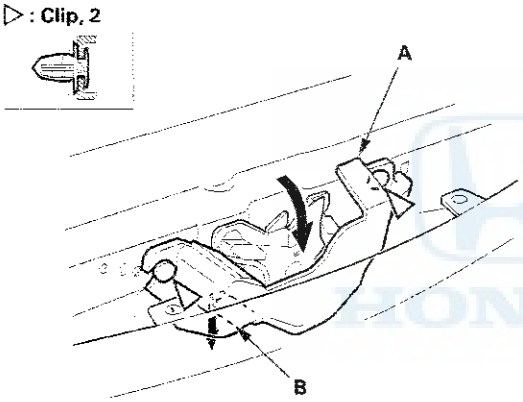

3. Remove the bolts, then remove the hood latch (A) from the body, and disconnect the hood opener cable (B) from the hood latch.

Fastener Locations

▶ : **Bolt, 3**

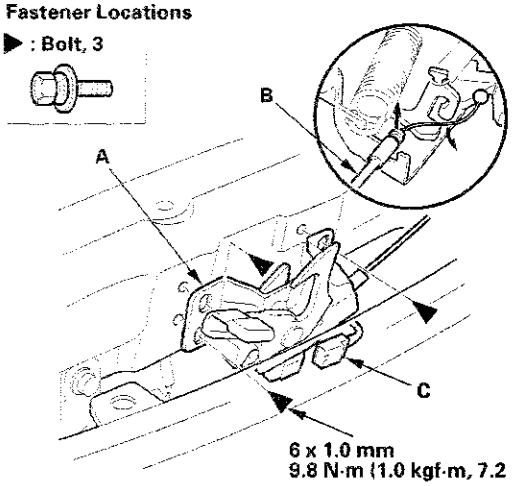

4. With hood latch switch: Disconnect the hood latch switch connector (C).

5. Install the latch in the reverse order of removal, and note these items:

   - Apply multipurpose grease to each location of the hood latch indicated by the arrows.
   - Make sure the hood opener cable is connected properly and hood latch switch connector is plugged in properly (for some models).
   - Adjust the hood latch alignment (see step 4 on page 20-248).
   - Make sure the hood opens properly and locks securely.
   - 4-door: If the cover clips are damaged or stress-whitened, replace them with new ones.
   - 4-door: Push the cover clips into place securely.

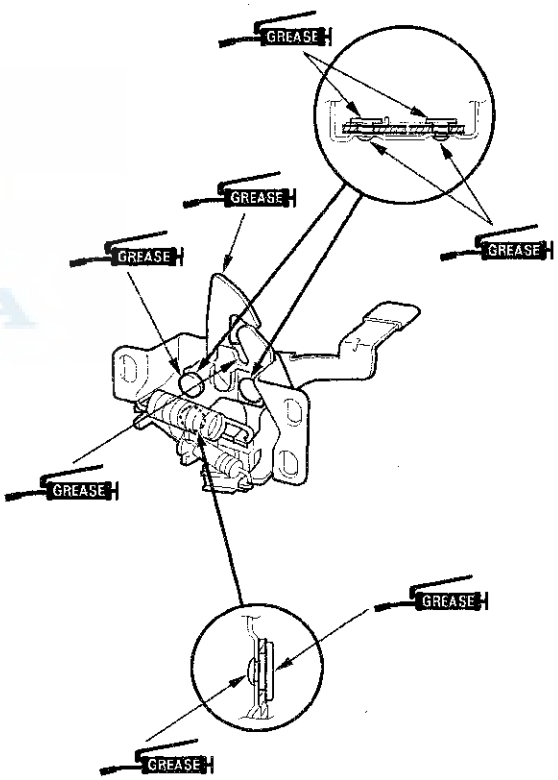

Hood Release Handle Replacement

NOTE:
- Put on gloves to protect your hands.
- Take care not to scratch the body.

1. Remove the driver's kick panel:
   - 2-door (see page 20-97)
   - 4-door (see page 20-99)
2. Remove the bolts, then remove the hood release handle (A).

Fastener Locations

▶ : Bolt, 2

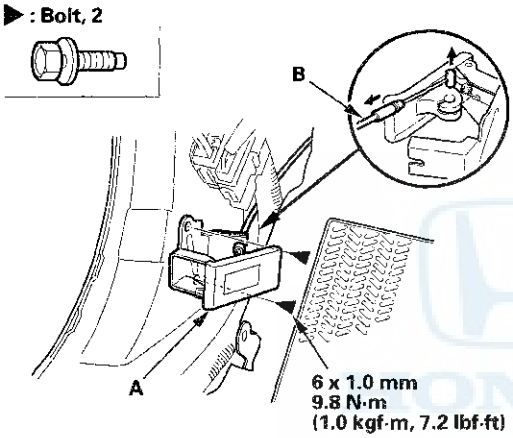

3. Disconnect the hood opener cable (B) from the hood release handle. Take care not to kink the cable.
4. Install the hood release handle in the reverse order of removal, and note these items:
   - Make sure the hood opener cable is connected properly.
   - Make sure the hood opens properly.

Trunk Lid Opener/Fuel Fill Door Opener Replacement

Special Tools Required
KTC trim tool set SOJATP2014 *
* Available through the Honda Tool and Equipment Program; call 888-424-6857

NOTE:
- Put on gloves to protect your hands.
- Take care not to scratch the rear bumper.
- Use the appropriate tool from the KTC trim tool set to avoid damage when removing components.

1. Pry out the bottom edge of the front side cap (A) at the notch with the trim tool to detach the hooks (B), and release the hooks (C), then remove the cap from the front door sill trim (D).

Fastener Location

▶ : Bolt, 1

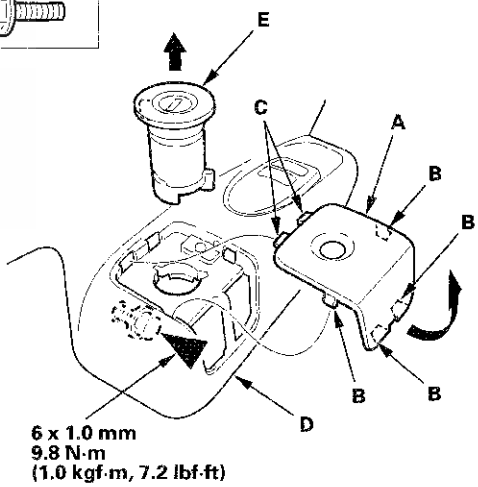

2. Remove the opener lock cylinder (E), and loosen the bolt.

3. Remove the screw securing the front door sill trim (A) and the trunk lid opener/fuel fill door opener.

Fastener Location

▶ : Screw, 1

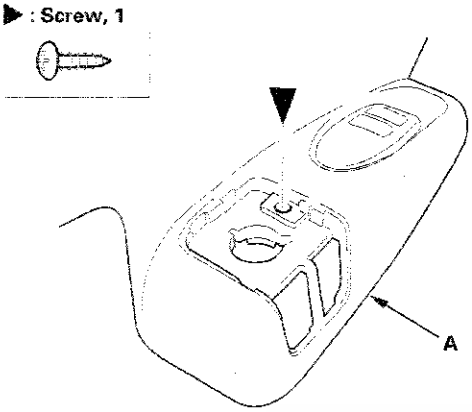

4. Remove the front door sill trim:

   - 2-door (see step 4 on page 20-97)
   - 4-door (see step 4 on page 20-99)

5. Remove the bolt, then remove the trunk lid opener/fuel fill door opener (A) from the bolt (B).

Fastener Location

▶ : Bolt, 1

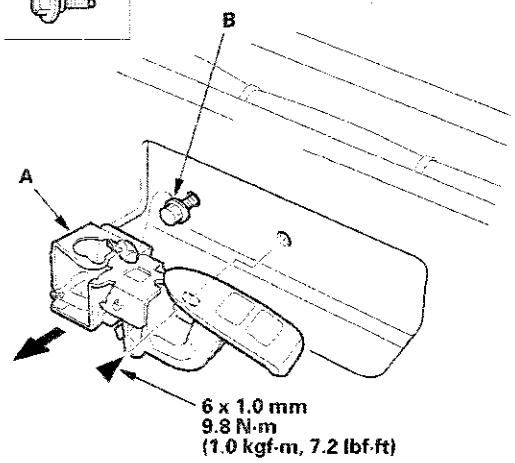

6. Disconnect the trunk lid opener/fuel fill door opener cable (A), then remove the opener (B). Take care not to kink the cable.

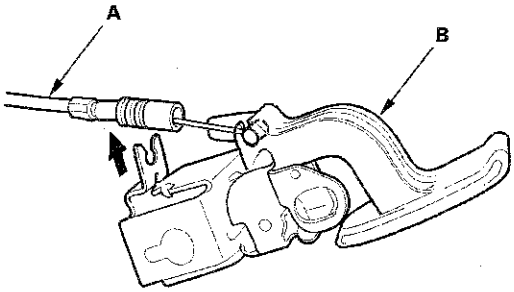

7. Install the opener in the reverse order of removal, and note these items:

   - Make sure the opener cable is connected properly.
   - Make sure the trunk lid and fuel fill door open properly and lock securely.
   - Install the cable end on the trunk lid opener/fuel fill door opener in the same position as when you removed it. Check the operation of the openers. If necessary, adjust the position of the cable end.
   - Reinstall the screw securing the front door sill trim and the trunk lid opener/fuel fill door opener, then position the trim and the opener before tightening the rear mounting bolt.

Trunk Lid Latch Replacement

Special Tools Required
KTC trim tool set SOJATP2014 *
* Available through the Honda Tool and Equipment Program; call 888-424-6857

NOTE:
- Put on gloves to protect your hands.
- Take care not to scratch the trunk lid.
- Use the appropriate tool from the KTC trim tool set to avoid damage when removing components.

1. From the latch cover (A) opening, pry the cover to release the projections (B) of the trunk lid latch (C) with the appropriate trim tool while pulling the cover, and release the projections (D) of the cover from the latch, then remove the cover.

Fastener Locations
▶ : Bolt, 2

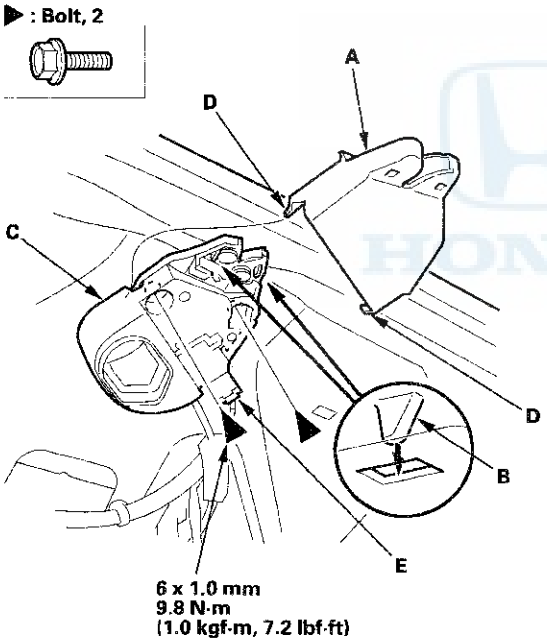

2. Disconnect the trunk lid latch connector (E), and remove the bolts, then remove the trunk lid latch.

3. Disconnect the trunk lid opener cable (A). Take care not to kink the cable.

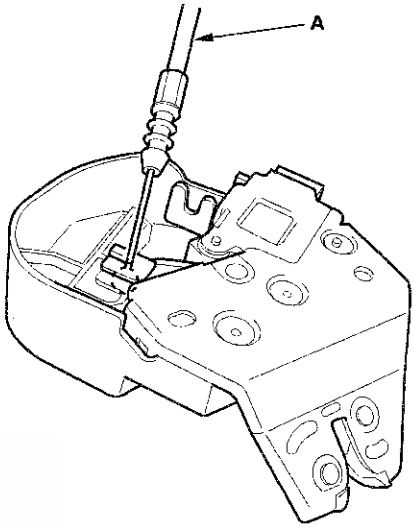

4. Install the latch in the reverse order of removal, and note these items:
   - Make sure the connector is plugged in properly and the opener cable is connected properly.
   - Make sure the trunk lid opens properly and locks securely.
   - Install the cable end (A) to the trunk lid latch in the same position as when you removed it. Check the operation of trunk lid opener. If necessary, adjust the position of the cable end.

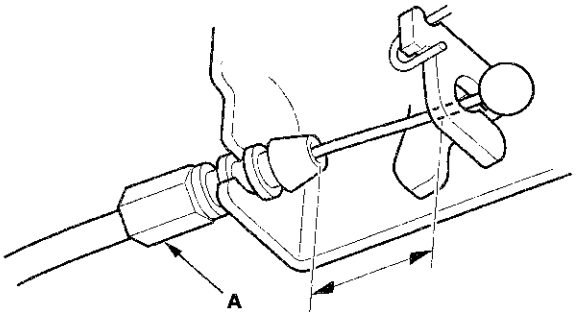

Frame Brace Replacement

Strut Brace Torque

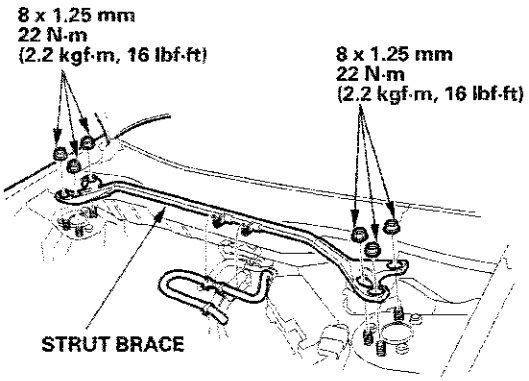

Rear Wheelhouse Gusset Replacement

4-door

NOTE:
- Put on gloves to protect your hands.
- Take care not to scratch the body and related parts.

1. Remove these items:
   - Rear seat-back (see page 20-223)
   - Rear seat side bolster, 4-door (see page 20-225)
   - Trunk side trim panel (see page 20-123)
   - Rear wheelhouse insulator, as needed (see step 10 on page 20-125)
2. Detach the wire harness clips (A), and remove the bolts (B), then remove the rear wheelhouse gusset (C).

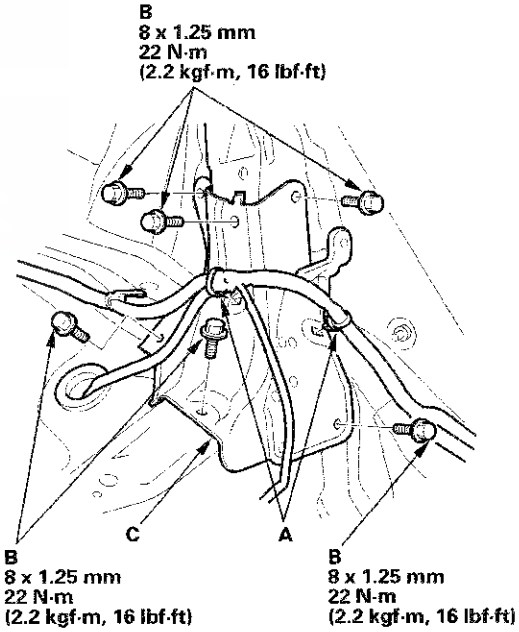

3. Install the gusset in the reverse order of removal.

Middle Cross-member Gusset Replacement

2-door

NOTE: Take care not to scratch the body.

1. Remove the rear side trim panel (see page 20-118).
2. Pull back the rear part of the carpet as needed.
3. Remove the bolts (A, B), then remove the middle cross-member gusset (C).

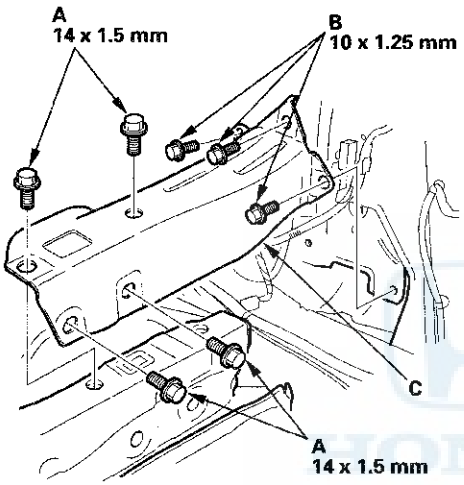

4. Install the gusset in the reverse order of removal. When installing the mounting bolts for the middle cross-member gusset (A), torque the mounting hardware in the sequence shown. If the mounting bolts are not torqued in this sequence, damage to the quarter panel will occur.

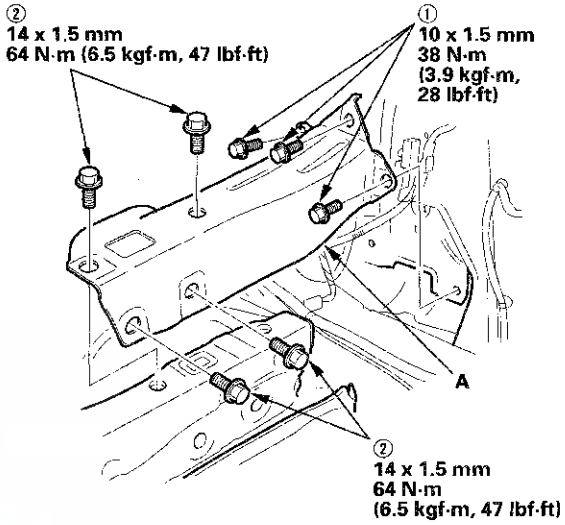

Subframe Replacement

Special Tools Required
Subframe alignment pin 070AG-SJAA10S

Front Subframe Torque

After removing the subframe mounting bolts, the front suspension subframe middle rubber mount mounting bolts, the front suspension subframe rear bracket mounting bolts, and the rear engine mounting base bracket mounting bolts, be sure to replace them with new ones.

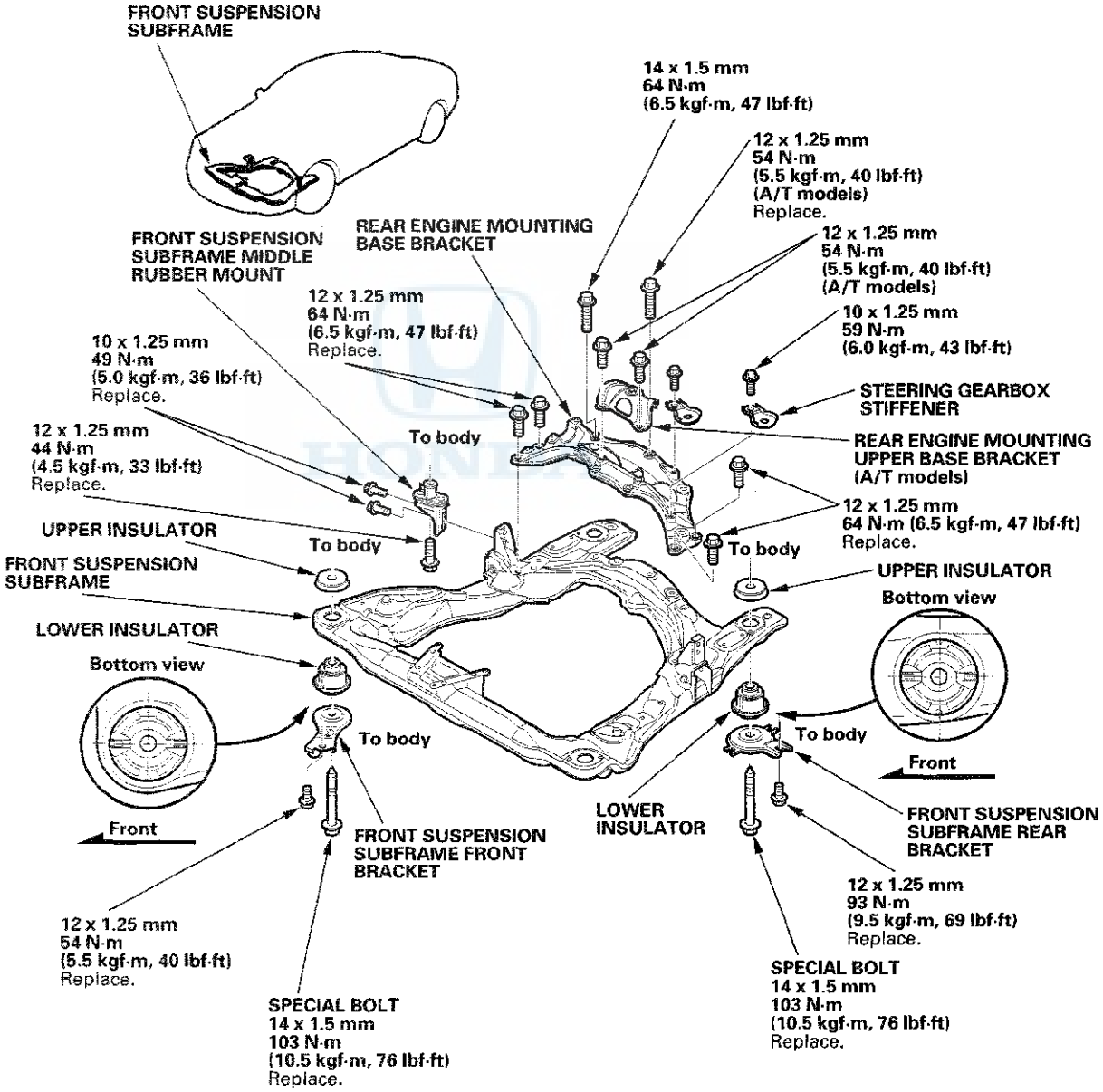

(cont'd)

Subframe Replacement (cont'd)

Front Subframe Alignment

NOTE: Using the subframe alignment pin, make the front suspension subframe alignment as the following sequence.

1. Make the front suspension subframe (A) alignment.

   -1 Lift the front suspension subframe up to the body, and loosely install the new subframe mounting bolts and the brackets (B).
   -2 Insert the subframe alignment pin (C) into the alignment hole in the right rear of the subframe, and then align the subframe with the body.
   -3 Loosely tighten the subframe mounting bolt (D) until the lower insulator (E) contacts to the body at the right rear.
   -4 Insert the guide pin into the alignment hole in the left rear of the subframe, and then align the subframe with the body.
   -5 Loosely tighten the subframe mounting bolt (F) until the lower insulator contacts to the body at the left rear.
   -6 Insert the subframe alignment pin into the alignment hole in the right rear of the subframe, and then tighten the mounting bolt to the specified torque values.
   -7 Insert the subframe alignment pin into the alignment hole in the left rear of the subframe, and then tighten the mounting bolt to the specified torque values.
   -8 Tighten both front subframe mounting bolts (G) to the specified torque values.
   -9 Tighten all of the bracket mounting bolts (H) to the specified torque values.

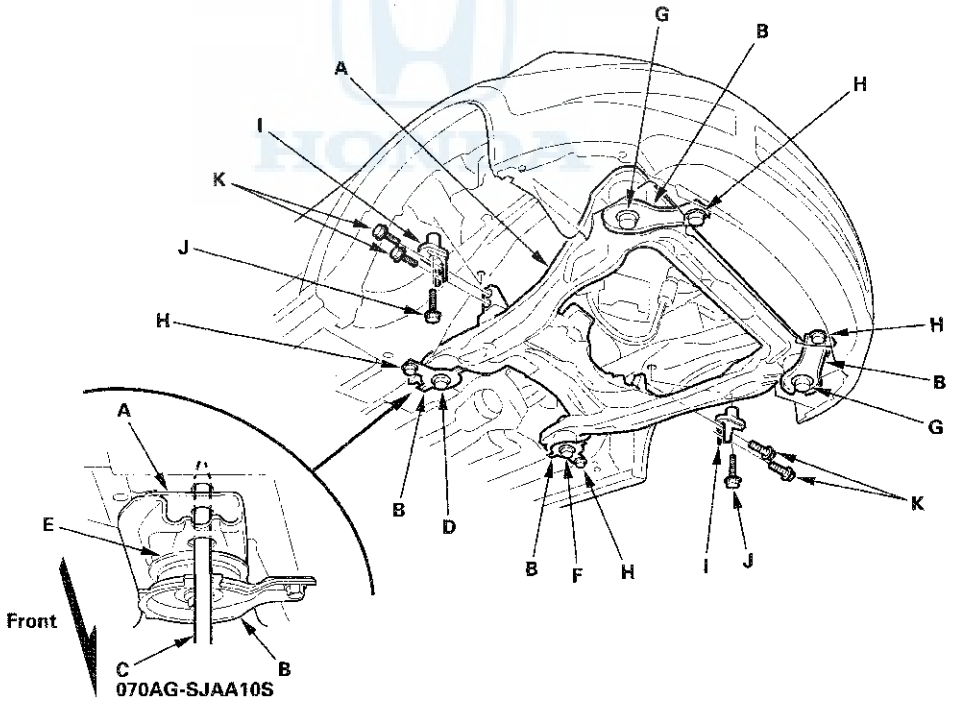

2. Set the front suspension subframe middle rubber mount (I) on both sides, and tighten the mounting bolts (J) that secure the rubber mounts to the body to the specified torque values. Tighten both subframe mounting bolts (K) securing the subframe and the rubber mounts to the specified torque values.

3. After reinstalling all removed parts, check and adjust the front wheel alignment (see page 18-5).

Rear Subframe Torque

NOTE:
- When installing, align both installation reference holes in the subframe with the reference holes in the body using the subframe alignment pin, and align both installation holes in the rear subframe mounting front stays with the reference holes in the body using the subframe alignment pin.
- After removing the subframe mounting bolts, be sure to replace them with new ones.

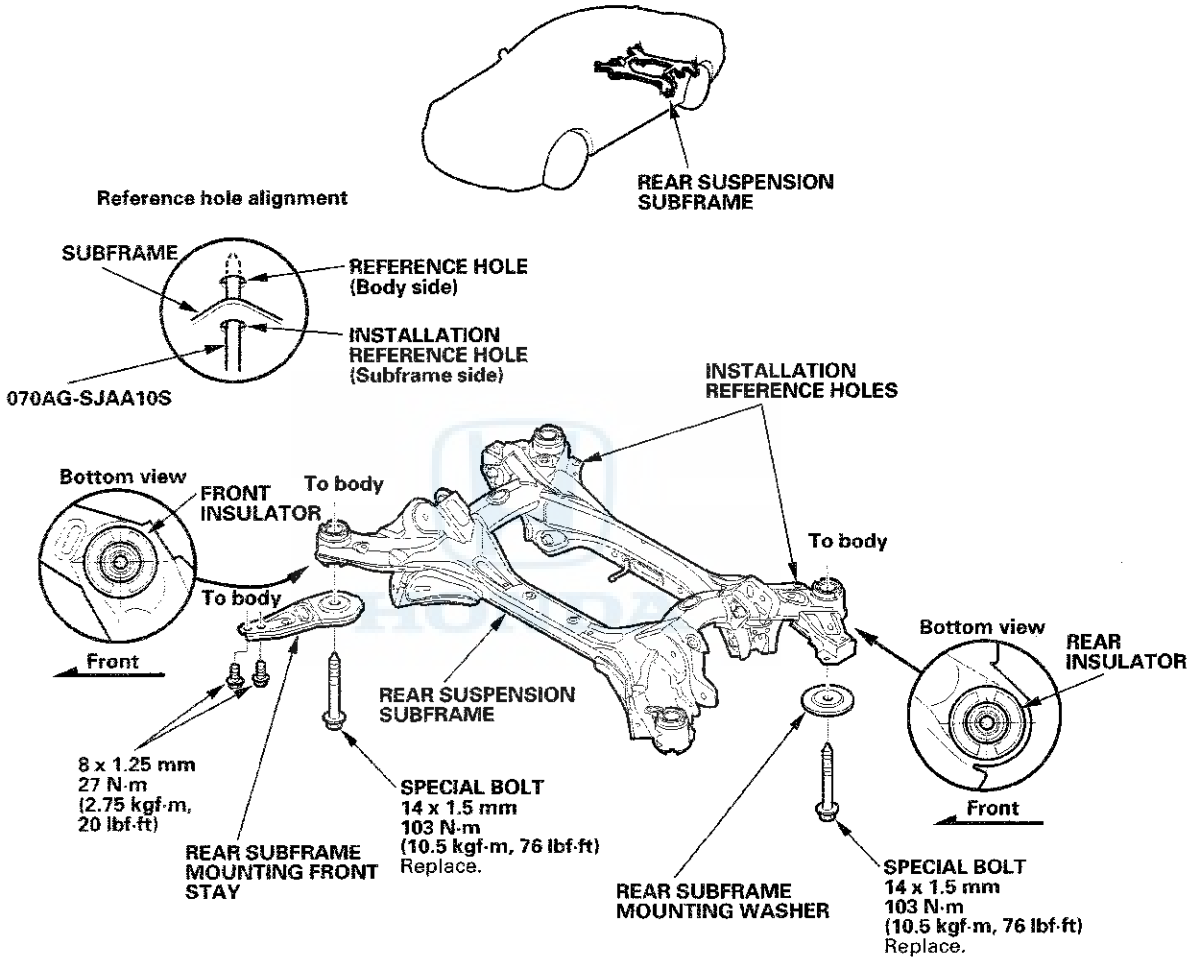

Frame Repair Chart

Top View

Unit: mm (in.)
ø: Inner diameter

a1 For front subframe mount ø20 (0.79) front
a2 For front subframe mount ø16 (0.63) rear
b1 Front side frame locating hole ø25 (0.98) front
b2 Front side frame locating hole ø15 (0.59) rear
b3 Front side frame rear end locating hole ø25 (0.98)
c1 For engine side mount ø13 (0.51) front
c2 For engine side mount ø13 (0.51) middle
c3 For engine side mount ø13 (0.51) rear
d1 For transmission mount ø11 (0.43) front
d2 For transmission mount ø11 (0.43) middle
d3 For transmission mount ø11 (0.43) rear
e1 For upper arm mount ø11 (0.43) front

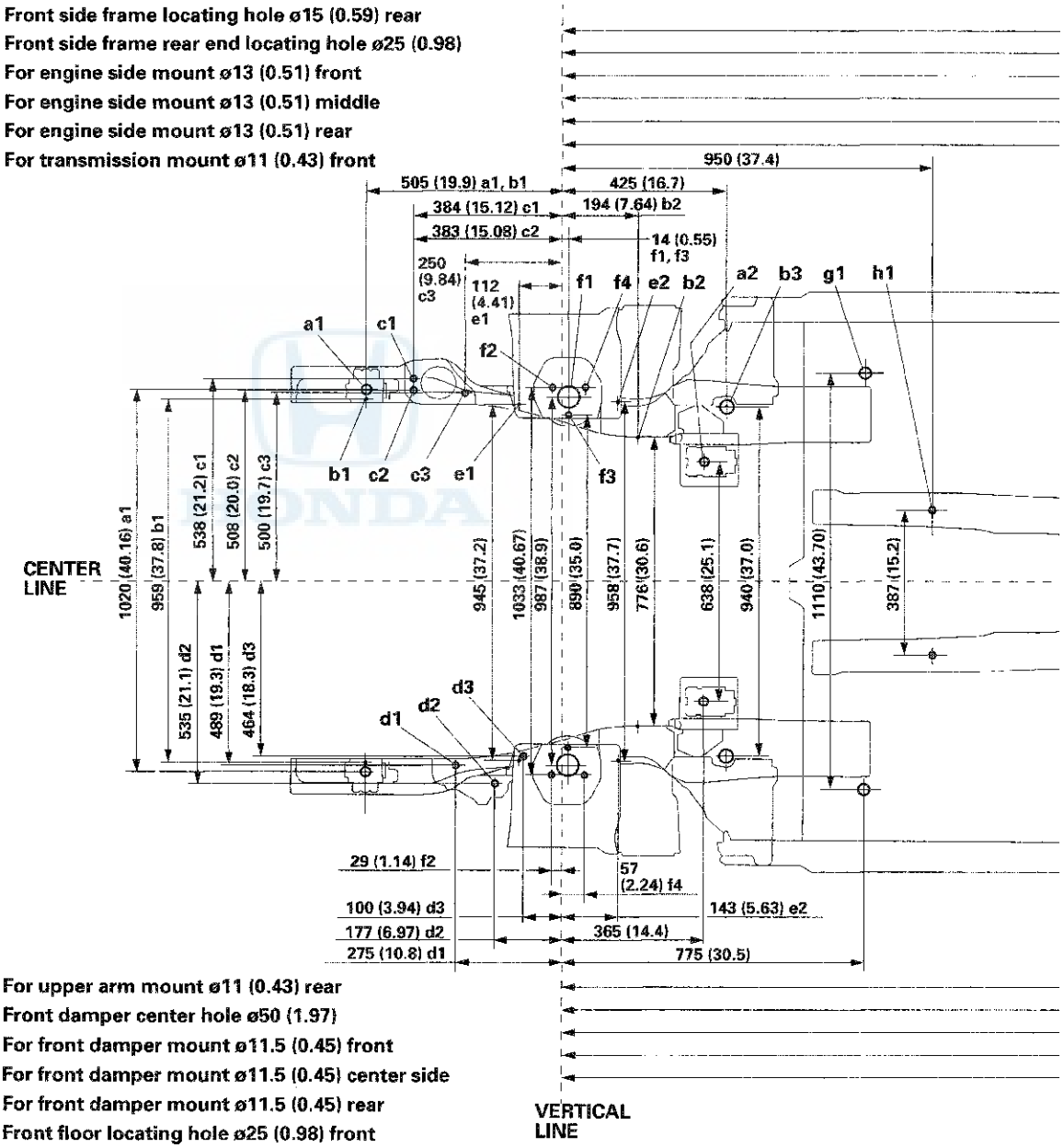

e2 For upper arm mount ø11 (0.43) rear
f1 Front damper center hole ø50 (1.97)
f2 For front damper mount ø11.5 (0.45) front
f3 For front damper mount ø11.5 (0.45) center side
f4 For front damper mount ø11.5 (0.45) rear
g1 Front floor locating hole ø25 (0.98) front
h1 Front floor tunnel frame locating hole ø13 (0.51) front

g2 Front floor locating hole ø25 (0.98) rear
h2 Front floor tunnel frame locating hole ø13 (0.51) rear
i Rear frame A locating hole ø25 (0.98)
j Rear floor locating hole ø25 (0.98)
k1 For rear subframe mount ø26.2 (1.03) front
k2 For rear subframe mount ø26.2 (1.03) rear
l Rear damper center hole ø52 (2.05)

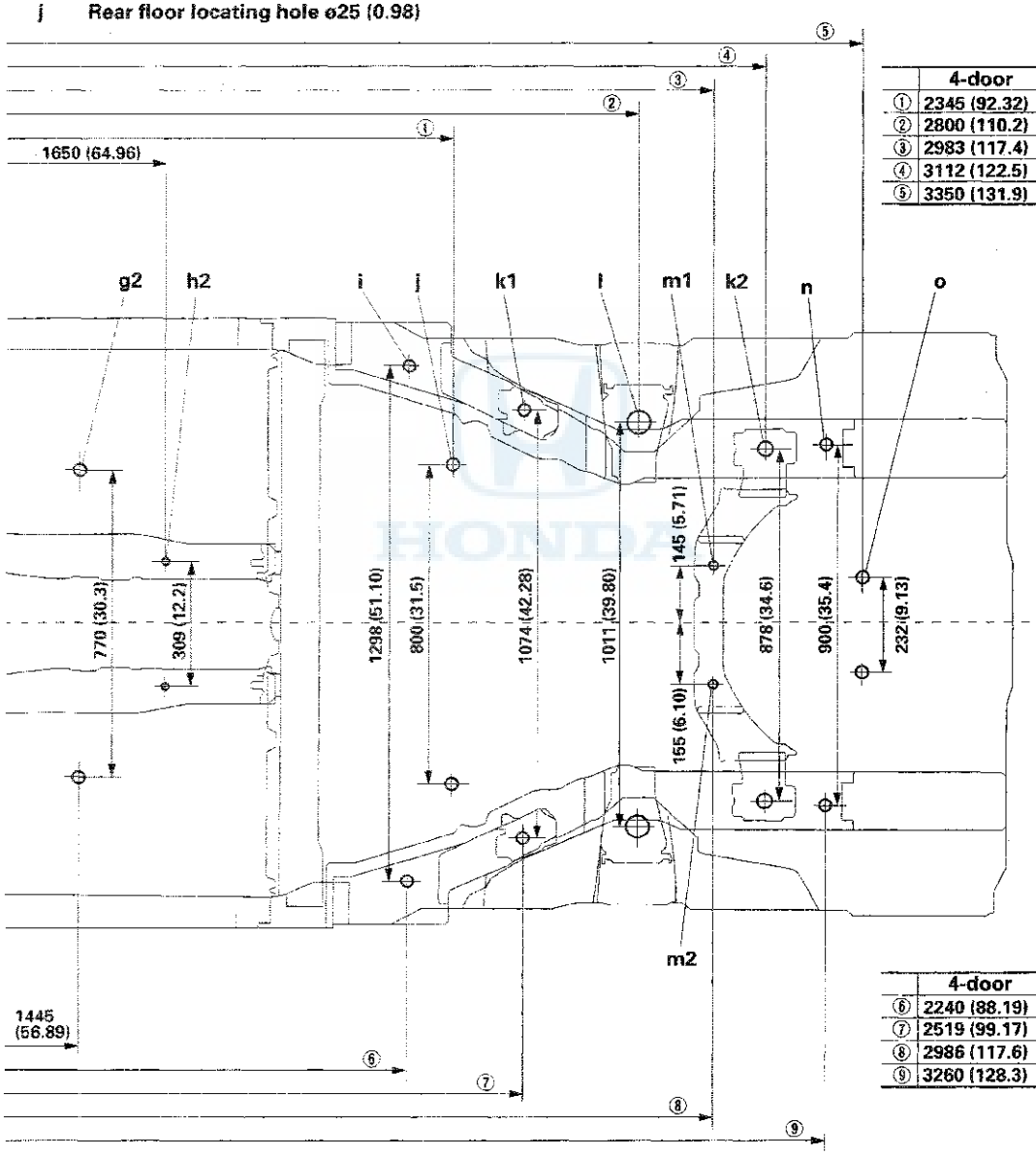

	4-door	2-door
①	2345 (92.32)	2285 (89.96)
②	2800 (110.2)	2740 (107.9)
③	2983 (117.4)	2923 (115.1)
④	3112 (122.5)	3052 (120.2)
⑤	3350 (131.9)	3290 (129.5)

	4-door	2-door
⑥	2240 (88.19)	2180 (85.83)
⑦	2519 (99.17)	2459 (96.81)
⑧	2986 (117.6)	2926 (115.2)
⑨	3260 (128.3)	3200 (126.0)

m1 Rear floor cross-member locating hole ø15 (0.59) right side
m2 Rear floor cross-member locating hole ø15 (0.59) left side
n Rear frame B locating hole ø25 (0.98)
o Spare tire pan locating hole ø25 (0.98)

(cont'd)

Frame Repair Chart (cont'd)

Side View

Unit: mm (in.)
ø: Inner diameter

- a1 For front subframe mount ø20 (0.79) front
- a2 For front subframe mount ø16 (0.63) rear
- b1 Front side frame locating hole ø25 (0.98) front
- b2 Front side frame locating hole ø15 (0.59) rear
- b3 Front side frame rear end locating hole ø25 (0.98)
- c1 For engine side mount ø13 (0.51) front
- c2 For engine side mount ø13 (0.51) middle
- c3 For engine side mount ø13 (0.51) rear
- d1 For transmission mount ø11 (0.43) front
- d2 For transmission mount ø11 (0.43) middle
- d3 For transmission mount ø11 (0.43) rear
- e1 For upper arm mount ø11 (0.43) front
- e2 For upper arm mount ø11 (0.43) rear
- f1 Front damper center hole ø50 (1.97)
- f2 For front damper mount ø11.5 (0.45) front
- f3 For front damper mount ø11.5 (0.45) center side
- f4 For front damper mount ø11.5 (0.45) rear
- g1 Front floor locating hole ø25 (0.98) front
- h1 Front floor tunnel frame locating hole ø13 (0.51) front

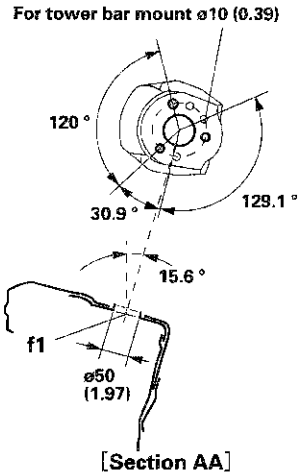

[Section AA]

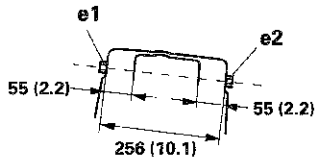

[Section BB]

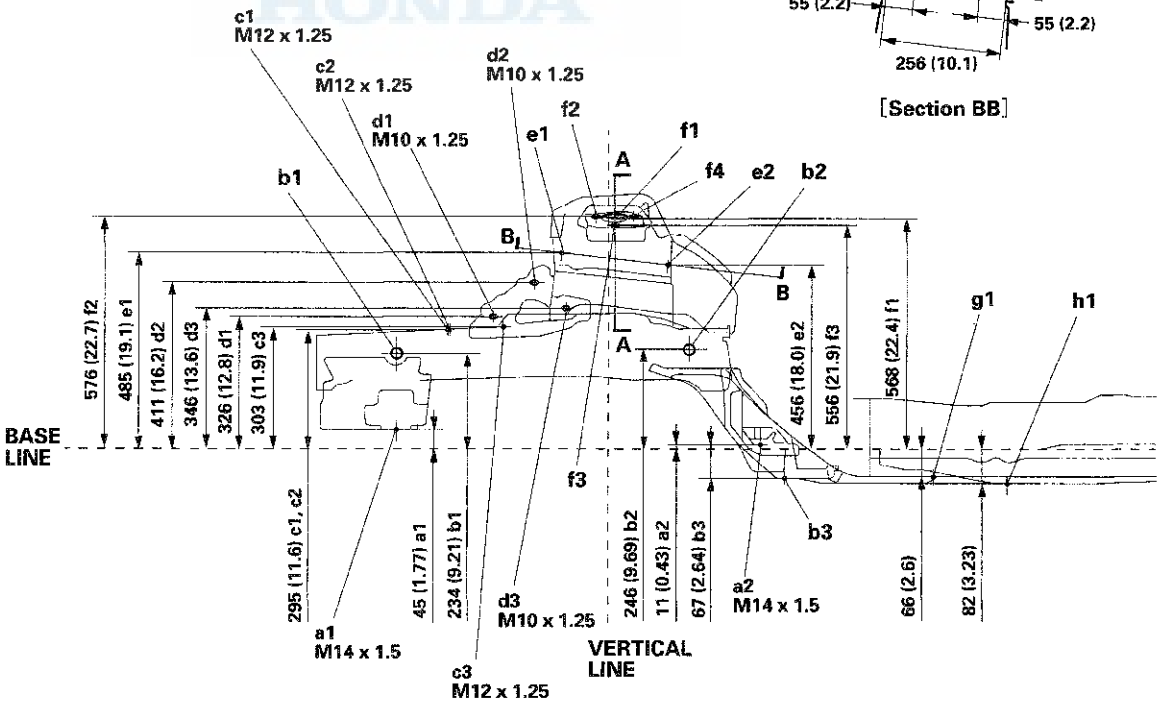

g2 Front floor locating hole ø25 (0.98) rear
h2 Front floor tunnel frame locating hole ø13 (0.51) rear
i Rear frame A locating hole ø25 (0.98)
j Rear floor locating hole ø25 (0.98)
k1 For rear subframe mount ø26.2 (1.03) front
k2 For rear subframe mount ø26.2 (1.03) rear
l Rear damper center hole ø52 (2.05)
m1 Rear floor cross-member locating hole ø15 (0.59) right side
m2 Rear floor cross-member locating hole ø15 (0.59) left side
n Rear frame B locating hole ø25 (0.98)
o Spare tire pan locating hole ø25 (0.98)

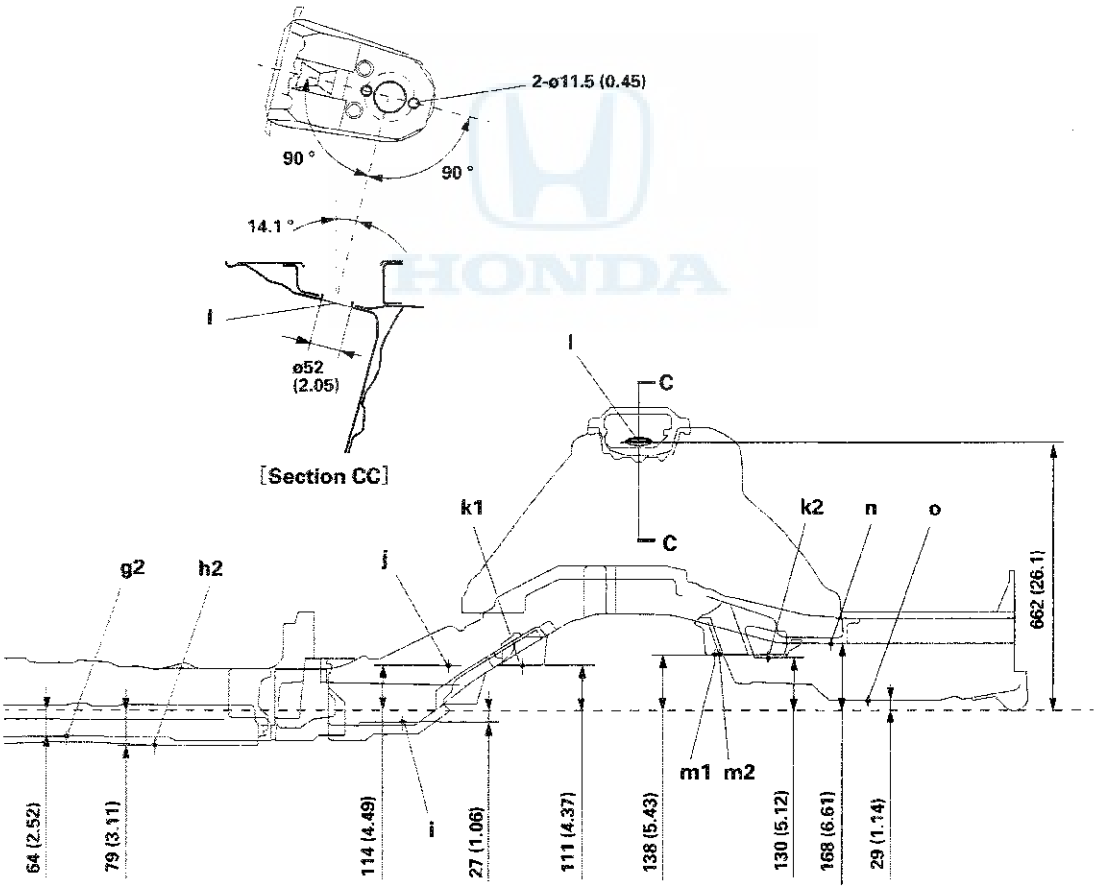

SUPPLEMENTAL RESTRAINT SYSTEM (SRS) (If HVAC maintenance is required)

The Accord SRS includes a driver's airbag in the steering wheel hub, a passenger's airbag in the dashboard above the glove box, seat belt tensioners in the front seat belt retractors, side curtain airbags in the sides of the roof, and side airbags in the front seat-backs. Information necessary to safely service the SRS is included in this Service Manual. Items marked with an asterisk (*) on the contents page include or are located near SRS components. Servicing, disassembling, or replacing these items requires special precautions and tools, and should be done by an authorized Honda dealer.

- To avoid rendering the SRS inoperative, which could lead to personal injury or death in the event of a severe frontal or side collision, all SRS service work should be done by an authorized Honda dealer.
- Improper service procedures, including incorrect removal and installation of the SRS, could lead to personal injury caused by unintentional deployment of the airbags, side airbags, and/or side curtain airbags.
- Do not bump or impact the SRS unit, front impact sensors, side impact sensors, or rear safing sensor when the ignition switch is in ON (II), or for at least 3 minutes after the ignition switch is turned to LOCK (0); otherwise, the system may fail in a collision, or the airbags may deploy.
- SRS electrical connectors are identified by yellow color coding. Related components are located in the steering column, front console, dashboard, dashboard lower panel, in the dashboard above the glove box, in the front seats, in the roof side, and around the floor. Do not use electrical test equipment on these circuits.

Navigation Tools: Click on the "Table of Contents" below, or use the Bookmarks to the left.

HVAC (Heating, Ventilation, and Air Conditioning)

HVAC (Heating, Ventilation, and Air Conditioning)

Special Tools 21-2

Heating/Air Conditioning

Component Location Index 21-3
A/C Service Tips and Precautions 21-6
A/C Refrigerant Oil Replacement 21-6
A/C Line Replacement 21-8
A/C System Inspection 21-9
General Troubleshooting Information 21-10
Symptom Troubleshooting Index 21-12
System Description 21-15
Circuit Diagram 21-20
DTC Troubleshooting 21-22
Recirculation Control Motor Circuit Troubleshooting 21-44
HVAC Control Power and Ground Circuit Troubleshooting 21-46
A/C Condenser Fan Circuit Troubleshooting 21-47
Radiator and A/C Condenser Fan Common Circuit Troubleshooting 21-48
A/C Compressor Clutch Circuit Troubleshooting 21-49
A/C Pressure Switch Circuit Troubleshooting 21-52
Evaporator Temperature Sensor Test 21-54
Power Transistor Test 21-55
Air Mix Control Motor Test 21-56
Air Mix Control Motor Replacement 21-57
Mode Control Motor Test 21-57
Mode Control Motor Replacement 21-59
Recirculation Control Motor Test 21-59
Recirculation Control Motor Replacement 21-61
HVAC Control Unit Removal/Installation 21-61
Blower Unit Removal/Installation 21-62
Blower Unit Component Replacement 21-64
Evaporator Core Replacement 21-64
Expansion Valve Replacement 21-66
* Heater Unit/Core Replacement 21-67
A/C Compressor Replacement 21-69
A/C Compressor Clutch Check 21-71
A/C Compressor Clutch Overhaul 21-72
A/C Compressor Relief Valve Replacement 21-74
A/C Condenser Replacement 21-75
Receiver/Dryer Desiccant Replacement 21-76
Dust and Pollen Filter Replacement 21-77
Refrigerant Recovery 21-78
System Evacuation 21-79
System Charging 21-80
Refrigerant Leak Check 21-81
A/C System Noise Check 21-86
A/C System Test 21-88

Climate Control

Component Location Index 21-95
General Troubleshooting Information 21-99
DTC Troubleshooting Index 21-106
Symptom Troubleshooting Index 21-107
System Description 21-110
Circuit Diagram 21-118
DTC Troubleshooting 21-122
Climate Control Power and Ground Circuit Troubleshooting 21-164
Navigation Communication Line Circuit Troubleshooting 21-165
Audio Communication Line Circuit Troubleshooting 21-167
Climate Control Switch Communication Line Circuit Troubleshooting 21-168
A/C Pressure Switch Circuit Troubleshooting 21-172
In-car Temperature Sensor Test 21-174
In-car Temperature Sensor Replacement 21-174
Outside Air Temperature Sensor Test 21-175
Outside Air Temperature Sensor Replacement 21-175
Sunlight Sensor Test 21-176
Sunlight Sensor Replacement 21-176
Passenger's Air Mix Control Motor Test 21-177
Passenger's Air Mix Control Motor Replacement 21-178
Mode Control Motor Test 21-178
Recirculation Control Motor Test 21-179
Climate Control Unit Removal/Installation 21-180
Climate Control Switch Removal/Installation 21-181

Special Tools

Ref. No.	Tool Number	Description	Qty
①	07SAZ-001000A	Backprobe Set	2

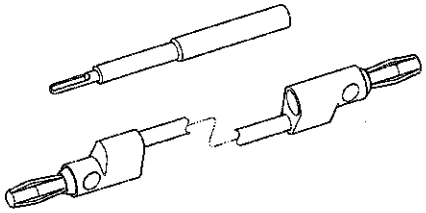

①

Component Location Index

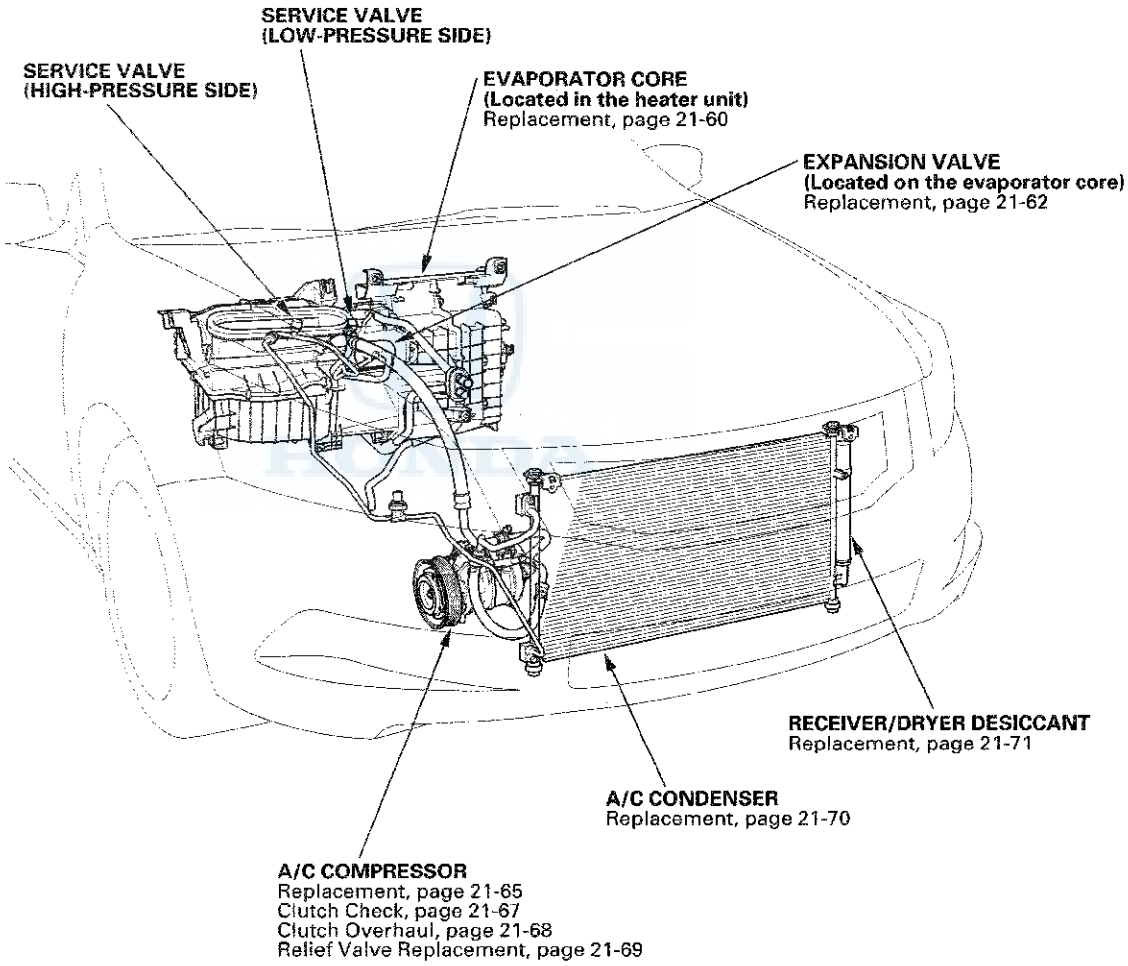

(cont'd)

Component Location Index (cont'd)

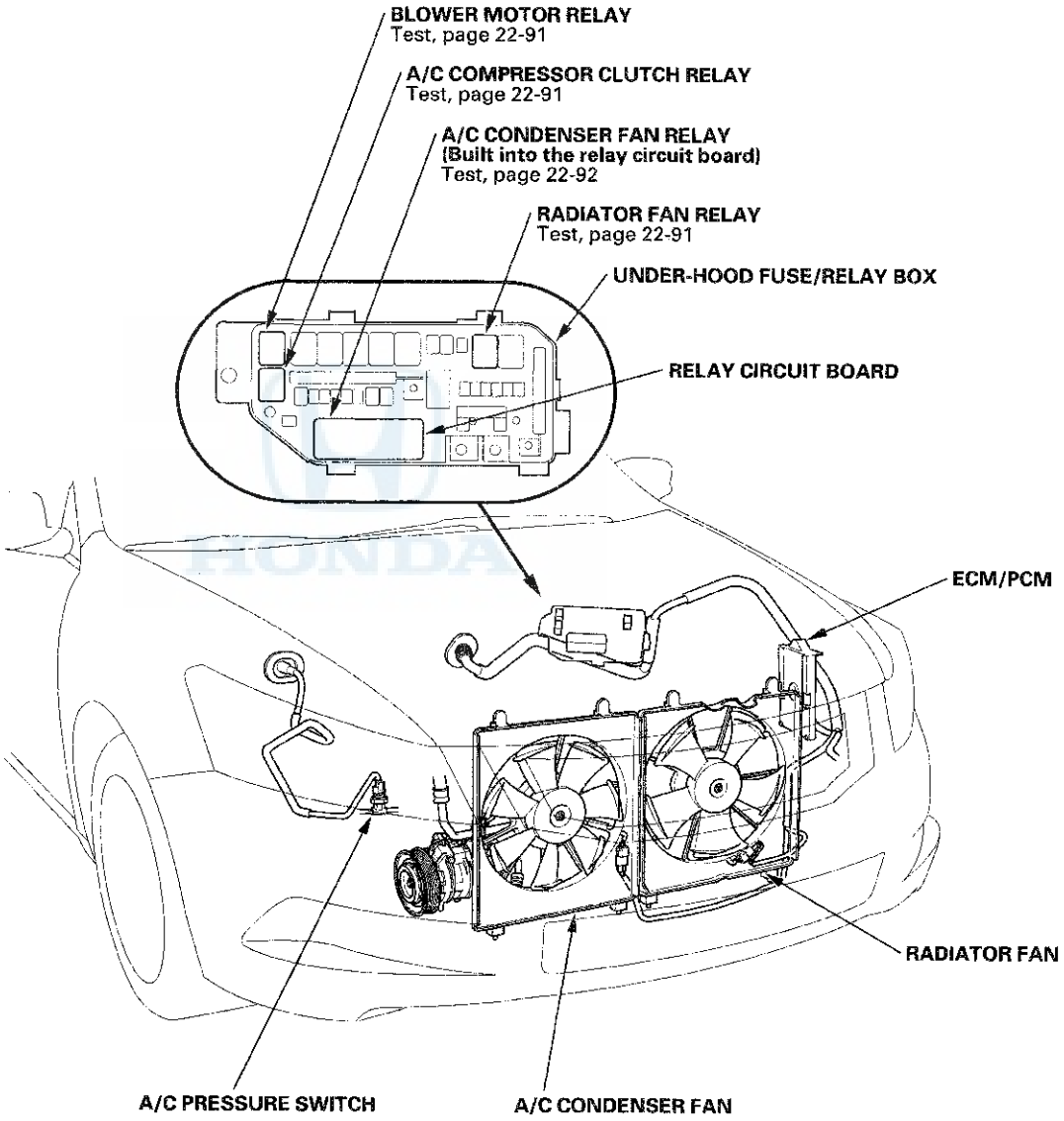

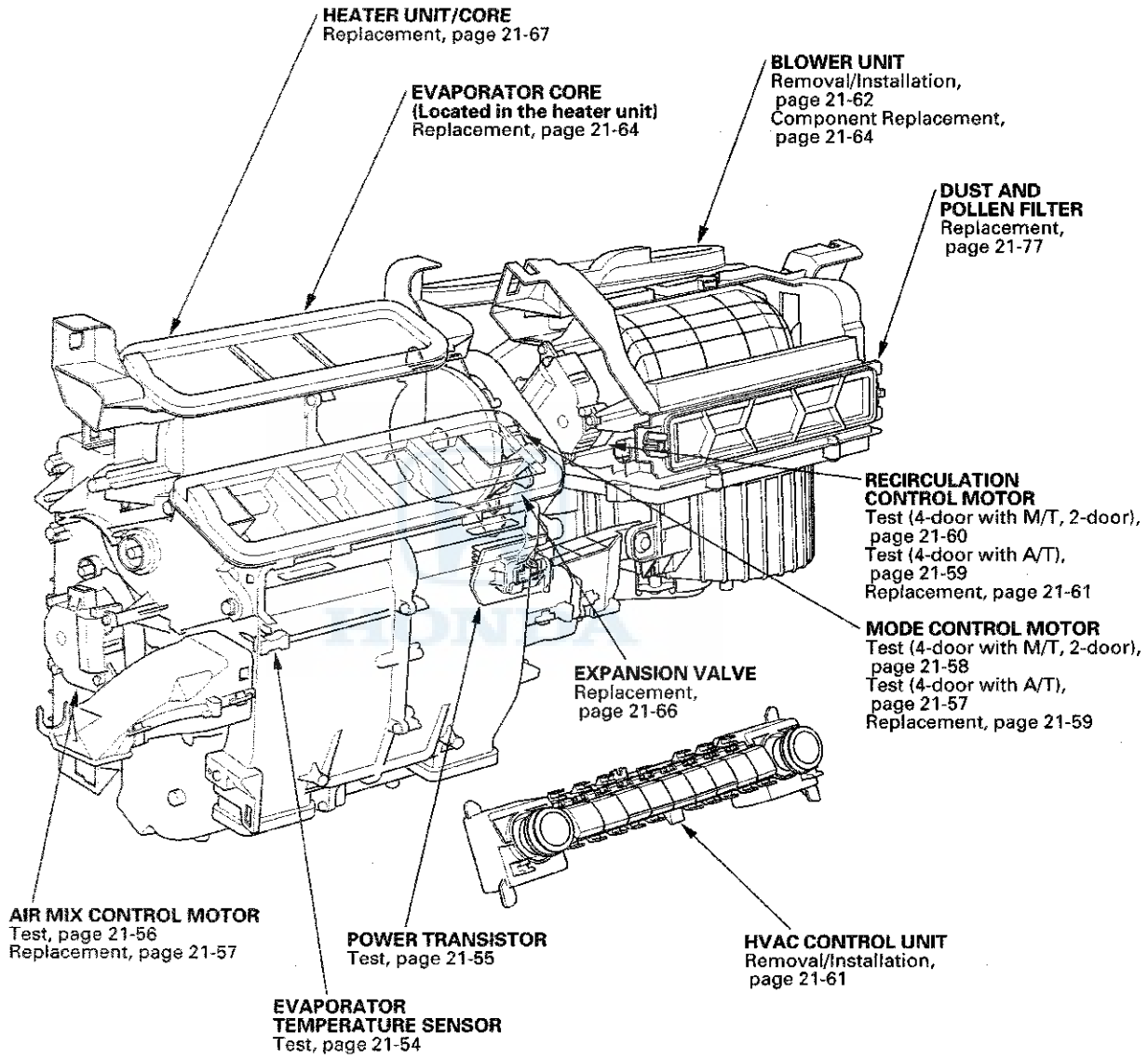
HEATER UNIT/CORE
Replacement, page 21-67
EVAPORATOR CORE
(Located in the heater unit)
Replacement, page 21-64
BLOWER UNIT
Removal/Installation, page 21-62
Component Replacement, page 21-64
DUST AND POLLEN FILTER
Replacement, page 21-77
RECIRCULATION CONTROL MOTOR
Test (4-door with M/T, 2-door), page 21-60
Test (4-door with A/T), page 21-59
Replacement, page 21-61
MODE CONTROL MOTOR
Test (4-door with M/T, 2-door), page 21-58
Test (4-door with A/T), page 21-57
Replacement, page 21-59
EXPANSION VALVE
Replacement, page 21-66
AIR MIX CONTROL MOTOR
Test, page 21-56
Replacement, page 21-57
POWER TRANSISTOR
Test, page 21-55
HVAC CONTROL UNIT
Removal/Installation, page 21-61
EVAPORATOR TEMPERATURE SENSOR
Test, page 21-54

A/C Service Tips and Precautions

⚠ WARNING

- Compressed air mixed with the R-134a forms a combustible vapor.
- The vapor can burn or explode causing serious injury.
- Never use compressed air to pressure test R-134a service equipment or vehicle air conditioning systems.

⚠ CAUTION

- Air conditioning refrigerant or lubricant vapor can irritate your eyes, nose, or throat.
- Be careful when connecting service equipment.
- Do not breathe refrigerant or vapor.

The air conditioning system uses HFC-134a (R-134a) refrigerant and polyalkyleneglycol (PAG) refrigerant oil, which are not compatible with CFC-12 (R-12) refrigerant or mineral oil. Do not use R-12 refrigerant or mineral oil in this system, and do not attempt to use R-12 servicing equipment; damage to the air conditioning system or your servicing equipment will result.
Use only service equipment that is U.L.-listed and is certified to meet the requirements of SAE J2210 to remove R-134a from the air conditioning system.

If accidental system discharge occurs, ventilate the work area before resuming service.

R-134a service equipment or vehicle air conditioning systems should not be pressure tested or leak tested with compressed air.

Additional health and safety information may be obtained from the refrigerant and lubricant manufacturers.

- Always disconnect the negative cable from the battery whenever replacing air conditioning parts.
- Keep moisture and dirt out of the system. When disconnecting any lines, plug or cap the fittings immediately; don't remove the caps or plugs until just before you reconnect each line.
- Before connecting any hose or line, apply a few drops of refrigerant oil to the O-ring.
- When tightening or loosening a fitting, use a second wrench to support the matching fitting.
- When discharging the system, use an R-134a refrigerant recovery/recycling/charging station; don't release refrigerant into the atmosphere.

A/C Refrigerant Oil Replacement

Recommended PAG oil: DENSO ND-OIL 8

- P/N 38897-PR7-A01AH: 120 mL (4 fl·oz)
- P/N 38899-PR7-A01: 40 mL (1 1/3 fl·oz)

It is important to have the correct amount of refrigerant oil in the A/C system to ensure proper lubrication of the A/C compressor.
Too little oil damages the A/C compressor; too much oil reduces the cooling capacity of the system, and can produce high vent temperatures.

- To avoid contamination, do not return the oil to the container once dispensed, and never mix it with other refrigerant oils.
- Immediately after using the oil, reinstall the cap on the container, and seal it to avoid moisture absorption.
- Do not spill the refrigerant oil on the vehicle; it may damage the paint; if it gets on the paint, wash it off immediately.

Add the recommended refrigerant oil in the amount listed if you replace any of the following parts.

A/C condenser
(including Dryer
Desiccant) .....35 mL (1 1/5 fl·oz)
Evaporator .....35 mL (1 1/5 fl·oz)
Line or hose .....10 mL (1/3 fl·oz)
Leakage repair .....25 mL (5/6 fl·oz)
A/C compressor .....For A/C compressor replacement, subtract the volume of oil drained from the removed A/C compressor from 82 mL (2 7/9 fl·oz), and drain the calculated volume of oil from the new A/C compressor: 82 mL (2 7/9 fl·oz) — Volume of removed A/C compressor = Volume to drain from new A/C compressor.

NOTE: Even if no oil is drained from the removed A/C compressor, don't drain more than 50 mL (1 2/3 fl·oz) from the new A/C compressor.

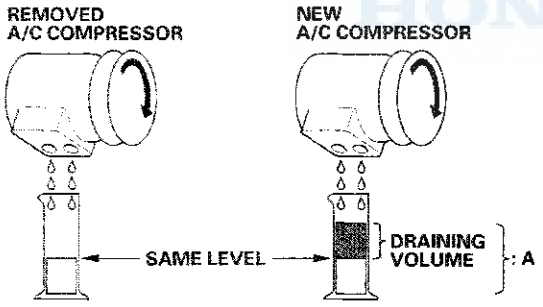

A: 82 mL (2 7/9 fl·oz)

A/C Line Replacement

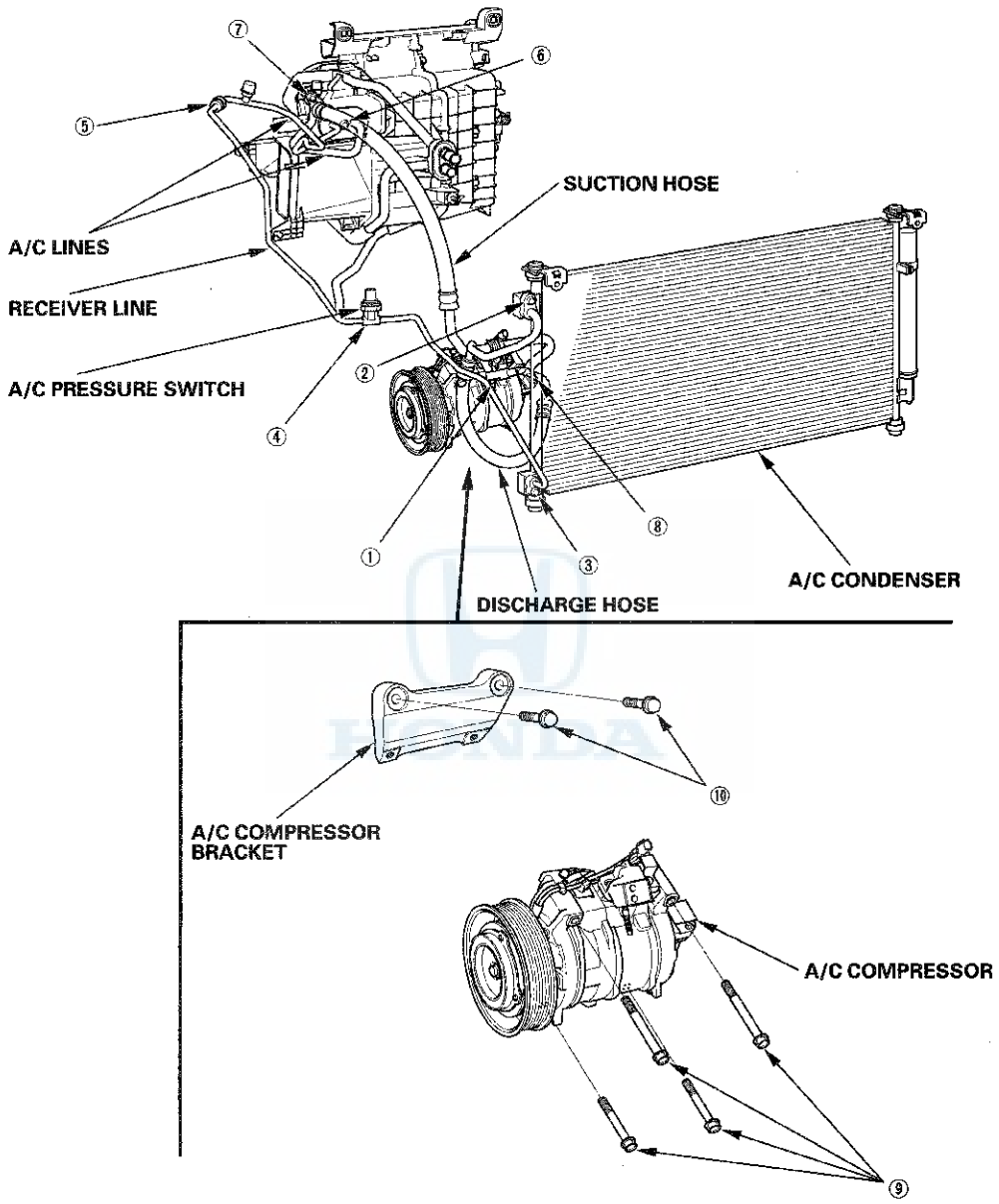

① Discharge hose to the A/C compressor (6 x 1.0 mm): 9.8 N·m (1.0 kgf·m, 7.2 lbf·ft)
② Discharge hose to the A/C condenser (6 x 1.0 mm): 9.8 N·m (1.0 kgf·m, 7.2 lbf·ft)
③ Receiver line to the A/C condenser (6 x 1.0 mm): 9.8 N·m (1.0 kgf·m, 7.2 lbf·ft)
④ A/C pressure switch to the receiver line (11 x 1.0 mm): 10.8 N·m (1.1 kgf·m, 8.0 lbf·ft)
⑤ Receiver line to the A/C line (16 x 1.5 mm): 13.7 N·m (1.4 kgf·m, 10.1 lbf·ft)
⑥ A/C lines to the evaporator (6 x 1.0 mm): 9.8 N·m (1.0 kgf·m, 7.2 lbf·ft)
⑦ A/C line to the suction hose (6 x 1.0 mm): 9.8 N·m (1.0 kgf·m, 7.2 lbf·ft)
⑧ Suction hose to the A/C compressor (6 x 1.0 mm): 9.8 N·m (1.0 kgf·m, 7.2 lbf·ft)
⑨ A/C compressor to the A/C compressor bracket (8 x 1.25 mm): 22 N·m (2.2 kgf·m, 16 lbf·ft)
⑩ A/C compressor bracket to the engine block (10 x 1.25 mm): 44 N·m (4.5 kgf·m, 32.5 lbf·ft)

A/C System Inspection

Before troubleshooting any problem with the air conditioning system, do the following:

1. With the ignition switch in LOCK (0), inspect the A/C components, the pressure lines and the hoses for stains that may indicate a refrigerant or a compressor oil leak.

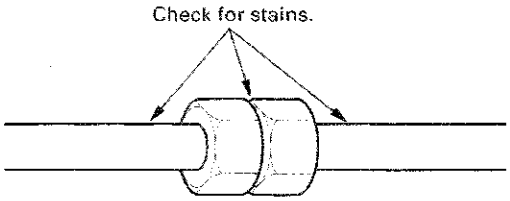

2. Check the A/C condenser for material clogging the fins or for damage to the fins:
   - Carefully clean any material from the A/C condenser fins with water and detergent. If deeper cleaning is required, clean the fins with Hondabrite Motorcycle Cleaner (P/N 08732-0032).
   - Be sure to dry the A/C condenser (A) completely.
   - Refer to the refrigerant leak test (see page 21-81) to confirm leaks if there is visible damage to the A/C condenser.

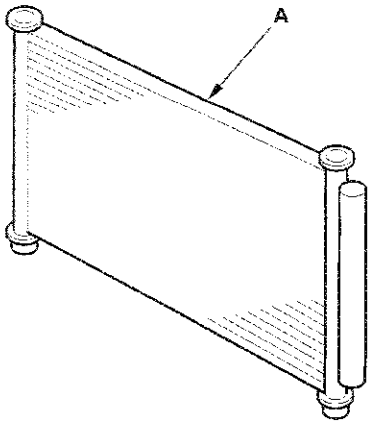

3. Inspect the drive belt (see page 4-29).

4. Make sure no material is blocking the airflow to the A/C condenser.

5. Check the dust and pollen filter, and replace it if it is clogged (see page 21-77).

6. Check for kinks or sharp bends in the A/C lines and hoses, which can greatly reduce system performance. Replace the A/C lines and hoses if they are kinked or damaged (see page 21-8).

7. Start the engine, turn the air conditioning system on, and allow it to run for a few minutes and reach stable operation.

8. Check that the A/C operates at each position of the blower fan switch (except OFF). If the A/C does not operate, refer to the symptom troubleshooting.

9. Check that the A/C compressor clutch (A) is engaged. The pressure plate should be rotating at the same speed as the pulley. If the pressure plate does not engage, refer to the symptom troubleshooting.

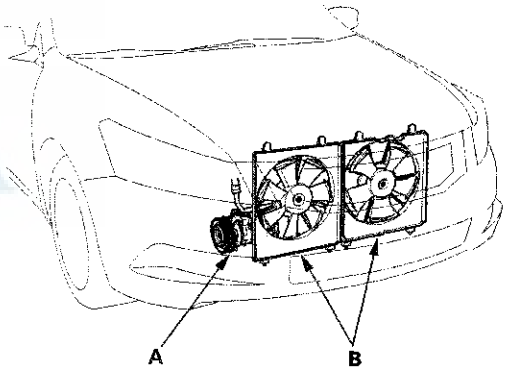

10. Check that the cooling fans (B) operate when the A/C compressor clutch is engaged. If either fan fails to operate when the A/C compressor clutch is engaged, refer to the symptom troubleshooting.

11. Check that the engine idle speed is correct when the A/C is switched on and off, and when the A/C compressor clutch is engaged and disengaged.

General Troubleshooting Information

How to Use the Self-diagnostic Function

The HVAC control unit has a self-diagnostic function for the heating, ventilation, and air conditioning system. To run the self-diagnostic function, do the following:

1. Turn the ignition switch to LOCK (0), and then to ON (II).
2. Set the FAN CONTROL dial to OFF, the TEMPERATURE CONTROL dial on Max Cool, and select the VENT mode.
3. Turn the ignition switch to LOCK (0), and then to ON (II).
4. Press and hold the RECIRCULATION CONTROL button, then within 10 seconds press and release the REAR WINDOW DEFOGGER/MIRROR DEFOGGER button five times. Release the RECIRCULATION CONTROL button; the recirculation indicator blinks two times, then the self-diagnostic begins.

   NOTE:
   - The blower motor will run at various speeds when in the self-diagnostic mode.
   - Once the self-diagnostic function is finished, the recirculation indicator blinks, and the number of blinks indicates the Diagnostic Trouble Code (DTC) number. If there are multiple DTCs, the indicator blinks each DTC in sequence from the lowest DTC number to the highest.
   - The indicator pauses 3 seconds, then repeats the DTC blink sequence.
   - If no DTCs are found, the indicator does not blink.

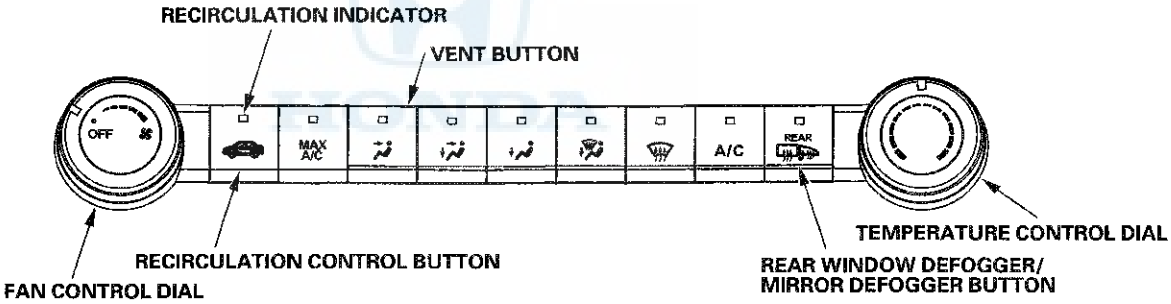

Example of DTC Indication Pattern (DTC 3)

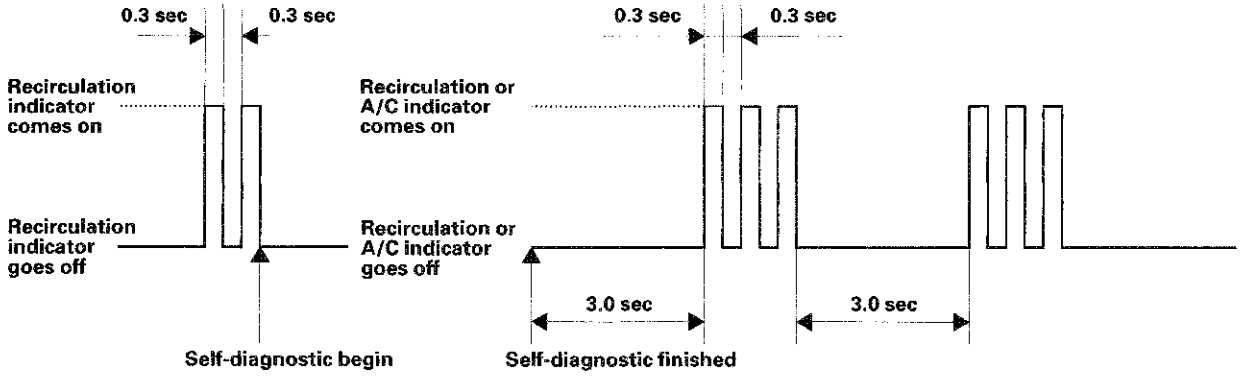

Example of DTCs Indication Pattern (DTC 2 and 4)

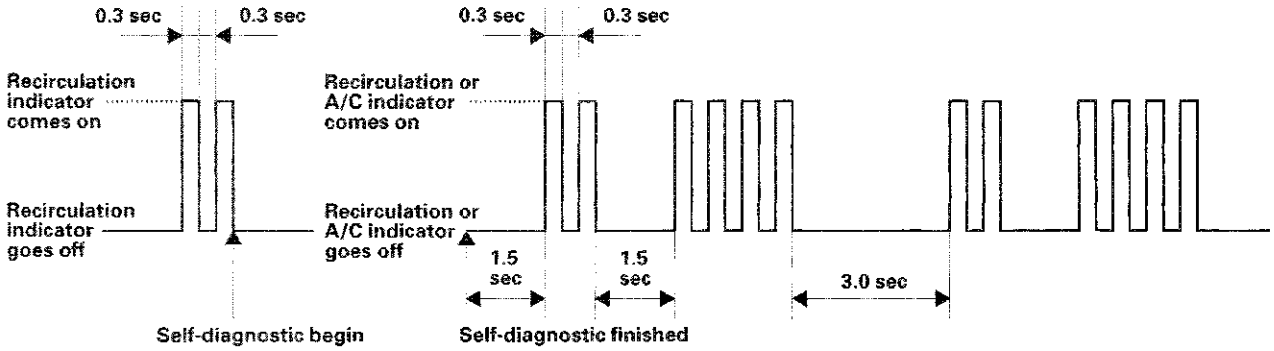

DTC (Recirculation Indicator Blinks)	Detection Item
1	An open in the air mix control motor circuit (see page 21-22)
2	A short in the air mix control motor circuit (see page 21-23)
3	A problem in the air mix control linkage, door, or motor circuit (see page 21-24)
4*1	An open in the mode control motor circuit (see page 21-26)
5*1	A short in the mode control motor circuit (see page 21-27)
6*1	A problem in the mode control linkage, doors, or motor circuit (see page 21-28)
7*1	An open in the recirculation control motor circuit (see page 21-30)
8*1	A short in the recirculation control motor circuit (see page 21-31)
9*1	A problem in the recirculation control linkage, door, or motor circuit (see page 21-32)
10*2	An open or short in the mode control circuit (see page 21-34)
11*2	A problem in the mode control linkage, doors, or motor circuit (see page 21-36)
12	A problem in the blower motor circuit (see page 21-37)
13	HVAC control unit internal error (see page 21-41)
14	An open in the evaporator temperature sensor circuit (see page 21-41)
15	A short in the evaporator temperature sensor circuit (see page 21-43)

*1: 4-door with M/T, 2-door
*2: 4-door with A/T

Clear the DTCs

When the problem is repaired, DTCs will automatically clear.

Max Cool Position Function

When the mode control button is in the MAX A/C position, the HVAC control unit will automatically select the recirculation mode and turn the A/C on. If the recirculation switch is pressed when in MAX A/C mode, MAX A/C turns off. If the A/C switch is pressed when in MAX A/C mode, the A/C turns off.

Symptom Troubleshooting Index

Symptom	Diagnostic procedure	Also check for
The blower and heater controls and the A/C system do not work	• Probable cause: HVAC control malfunction • Do the HVAC control power and ground circuit troubleshooting (see page 21-46)	• HVAC DTCs (see page 21-10) • Blown fuse No. 16 (7.5 A) in the driver's under-dash fuse/relay box • Faulty blower motor relay • Poor ground at G401 (with navigation and premium audio: see page 22-40, with premium audio: see page 22-42, without premium audio: see page 22-44) • Poor or loose connections at the terminals
The A/C compressor clutch and the A/C condenser/radiator fans are inoperative, but the blower and heater controls work	• Probable cause: A/C pressure switch circuit malfunction • A/C pressure switch circuit troubleshooting (see page 21-52)	• HVAC DTCs (see page 21-10) • Powertrain DTCs (see page 11-3) • Poor or loose connections at the terminals
The A/C compressor clutch does not engage, but the A/C condenser/ radiator fans operate, and the blower and heater controls work	• Probable cause: No power to the A/C compressor clutch • Do the A/C compressor clutch circuit troubleshooting (see page 21-49)	• HVAC DTCs (see page 21-10) • Blown fuse No. 20 (7.5 A) in the under-hood fuse/relay box • A/C system pressure is normal (see page 21-88) • Poor or loose connections at the terminals
The A/C condenser fan is inoperative, but the radiator fan runs with the A/C on. The blower and heater controls work normally	• Probable cause: A/C condenser fan circuit malfunction • Do the A/C condenser fan circuit troubleshooting (see page 21-47)	• HVAC DTCs (see page 21-10) • Powertrain DTCs (see page 11-3) • Blown fuse No. 5 (20 A) in the under-hood fuse/relay box • Poor ground at G302 (see page 22-30) • Poor or loose connections at the terminals
The A/C condenser and radiator fans are inoperative with the A/C on. The blower and heater controls work normally	• Probable cause: Radiator/A/C condenser fan common circuit malfunction • Do the radiator and A/C condenser fan common circuit troubleshooting (see page 21-48)	• HVAC DTCs (see page 21-10) • Powertrain DTCs (see page 11-3) • Blown fuses No. 5 (20 A) and No. 3–6 (MAIN FAN MTR) (30 A) in the under-hood fuse/relay box. • Poor ground at G302 (see page 22-30) • Poor or loose connections at the terminals

Symptom	Diagnostic procedure	Also check for
The A/C compressor clutch cycles rapidly on and off	• Probable cause: A/C system is very low on refrigerant, indicating a possible leak • Do the refrigerant leak check (see page 21-81), and repair any leaks. Replace the receiver/dryer (see page 21-76), then recharge the system to specifications (see page 21-80)	• HVAC DTCs (see page 21-10) • If there is no leak and the refrigerant level is normal, do the A/C compressor clutch circuit troubleshooting (see page 21-49), and look for an intermittent problem
Warm air comes out of the vents, and the high pressure liquid line is very hot	• Probable causes: The A/C system is overcharged (too much refrigerant), or the condenser is malfunctioning • Recover A/C refrigerant (see page 21-78), then check the A/C condenser for restrictions or poor airflow. Repair as needed. Recharge the system to specifications (see page 21-80)	• Incorrect tension or abnormal wear on the drive belt. Replace the belt and/or the belt tensioner as needed • Proper operation of the A/C condenser/radiator fans. Repair as needed • Signs of an overheated engine. Repair as needed
Warm air comes out of the vents. The suction line is cool to warm, and the discharge line is warm to hot	• Probable cause: A/C system is low on refrigerant, indicating a possible leak • Do the refrigerant leak check (see page 21-81), and repair any leaks. Recharge the system to specifications (see page 21-80)	• HVAC DTCs (see page 21-10) • Add refrigerant oil depending on the part you replaced (see page 21-6)
Warm air comes out of the vents. The suction line is cool to warm, the discharge line is warm to hot, and there is no frost on the expansion valve	• Probable cause: Excessive air and/or moisture in the system, indicating a possible leak • Do the refrigerant leak check (see page 21-81), and repair any leaks. Replace the receiver/dryer (see page 21-76), then recharge the system to specifications (see page 21-80)	• HVAC DTCs (see page 21-10) • Check the amount of refrigerant oil in the system
Warm air comes out of the vents. The liquid line or the condenser outlet is abnormally cool, or there is frost or condensation on the receiver/dryer	• Probable cause: A restriction in the high-pressure side of the system • Recover A/C refrigerant (see page 21-78), then check the liquid line, the receiver/dryer, and the condenser for restrictions. Repair as needed. Recharge the system to specifications (see page 21-80)	HVAC DTCs (see page 21-10)
There is heavy frost or condensation on the expansion valve, and frost on the suction line	• Probable cause: A restriction in the low-pressure side of the system • Recover A/C refrigerant (see page 21-78), then check the suction line, and the expansion valve for restrictions. Repair as needed. Recharge the system to specifications (see page 21-80)	HVAC DTCs (see page 21-10)

(cont'd)

Symptom Troubleshooting Index (cont'd)

Symptom	Diagnostic procedure	Also check for
Warm air comes out of the vents, and there is frost on the expansion valve	• Probable cause: The expansion valve is stuck closed • Replace the expansion valve (see page 21-66)	• HVAC DTCs (see page 21-10) • Check the old expansion valve for contamination. If contaminants are found, replace the A/C system component that caused the contamination
The temperature of the liquid line is the same on both sides of the expansion valve, and the evaporator coil or suction line has heavy condensation	• Probable cause: The expansion valve is stuck open • Replace the expansion valve (see page 21-66)	• HVAC DTCs (see page 21-10) • Check the old expansion valve for contamination. If contaminants are found, replace the A/C system component that caused the contamination
Warm air comes out of the vents, but operation is normal otherwise	• Probable cause: A/C compressor failure • Do the A/C system test (see page 21-88), and correct any problems. If necessary, replace the A/C compressor (see page 21-69)	• HVAC DTCs (see page 21-10) • Add refrigerant oil depending on the part you replaced (see page 21-6).
Driver's and passenger's side vent temperatures vary by more than 20 °F (11 °C)	• Probable causes: The recirculation control door or the air mix door is malfunctioning • Do the following troubleshooting: – Recirculation control motor circuit troubleshooting (see page 21-44) – Air mix control motor test (see page 21-56)	• HVAC DTCs (see page 21-10) • Poor or loose connections at the terminals
Insufficient heating	1. Check the coolant level (see page 10-6) 2. Check the radiator cap (see page 10-3) 3. Check the coolant temperature during normal operation 4. Check the heater core inlet hose temperature: • If it is COLD, check for restrictions in the hose, a damaged or leaking thermostat, or a damaged or leaking water pump • If it is HOT, check for restrictions in the heater core. Back flush or replace the heater core 5. Do the air mix control motor test (see page 21-56) 6. Check the blower motor unit for obstructions 7. Check for air leaks around the ducts and vents	• HVAC DTCs (see page 21-10) • Damaged cylinder head gasket

System Description

The air conditioning (A/C) system removes heat from the passenger compartment by transferring heat from the ambient air to the evaporator. The A/C system refrigerant expands in the evaporator, and the evaporator becomes very cold and absorbs the heat from the ambient air. The blower fan pushes air across the evaporator where the heat is absorbed, and then it blows the cool air into the passenger compartment.

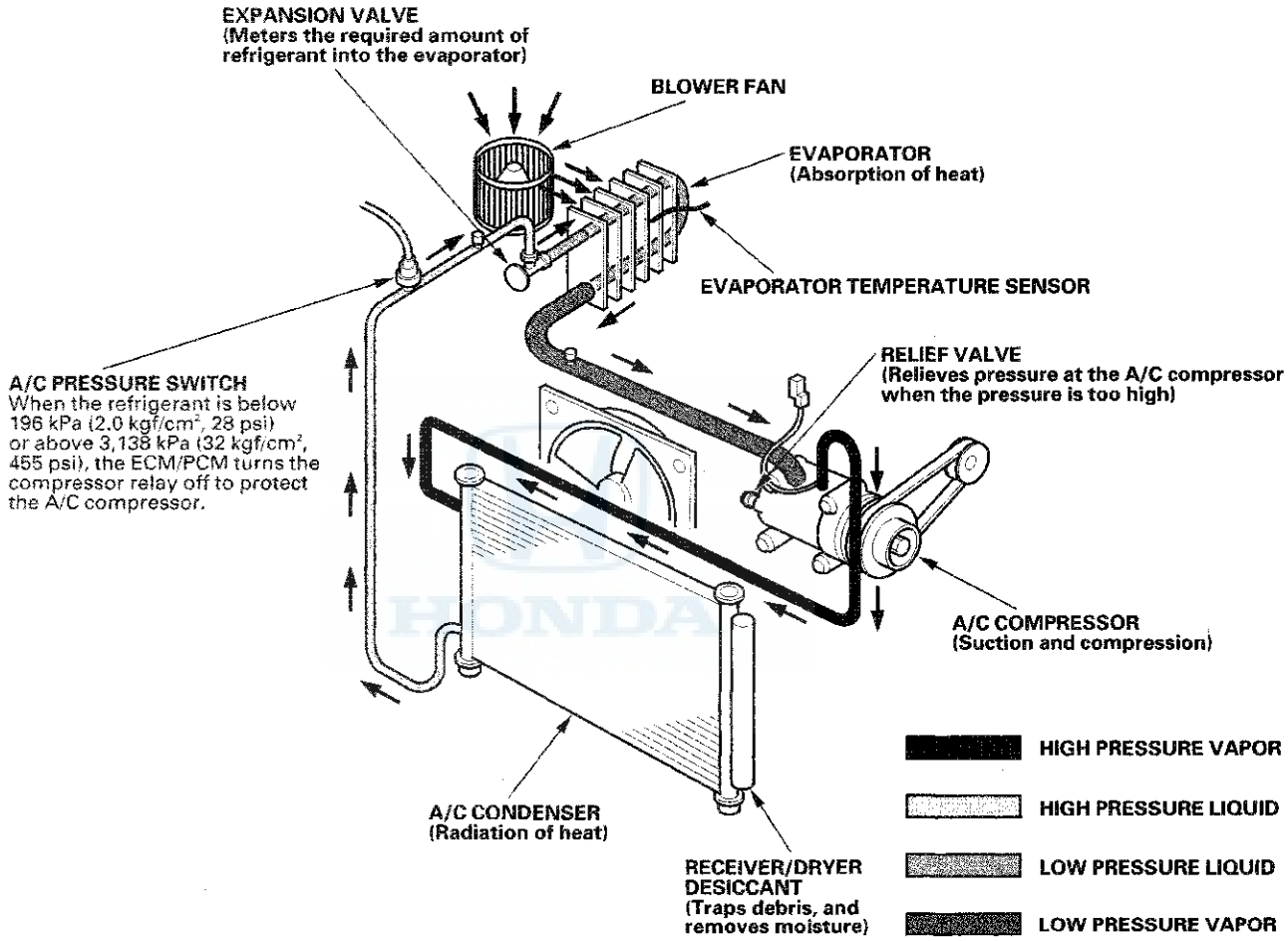

This vehicle uses HFC-134a (R-134a) refrigerant, which does not contain chlorofluorocarbons. Pay attention to the following service items:

- Do not mix refrigerants CFC-12 (R-12) and HFC-134a (R-134a). They are not compatible.
- Use only the recommended polyalkyleneglycol (PAG) refrigerant oil (DENSO ND-OIL 8) designed for the R-134a A/C compressor. Intermixing the recommended (PAG) refrigerant oil with any other refrigerant oil will result in A/C compressor failure.
- All A/C system parts (A/C compressor, discharge line, suction line, evaporator, A/C condenser, receiver/dryer, expansion valve, O-rings for joints) are designed for refrigerant R-134a. Do not exchange with R-12 parts.
- Use a halogen gas leak detector designed for refrigerant R-134a.
- R-12 and R-134a refrigerant servicing equipment are not interchangeable. Use only a recovery/recycling/charging station that is U.L.-listed and is certified to meet the requirements of SAE J2210 to service the R-134a air conditioning systems.
- Always recover refrigerant R-134a with an approved recovery/recycling/charging station before disconnecting any A/C fitting.

(cont'd)

System Description (cont'd)

Heating/Air Conditioning Door Positions

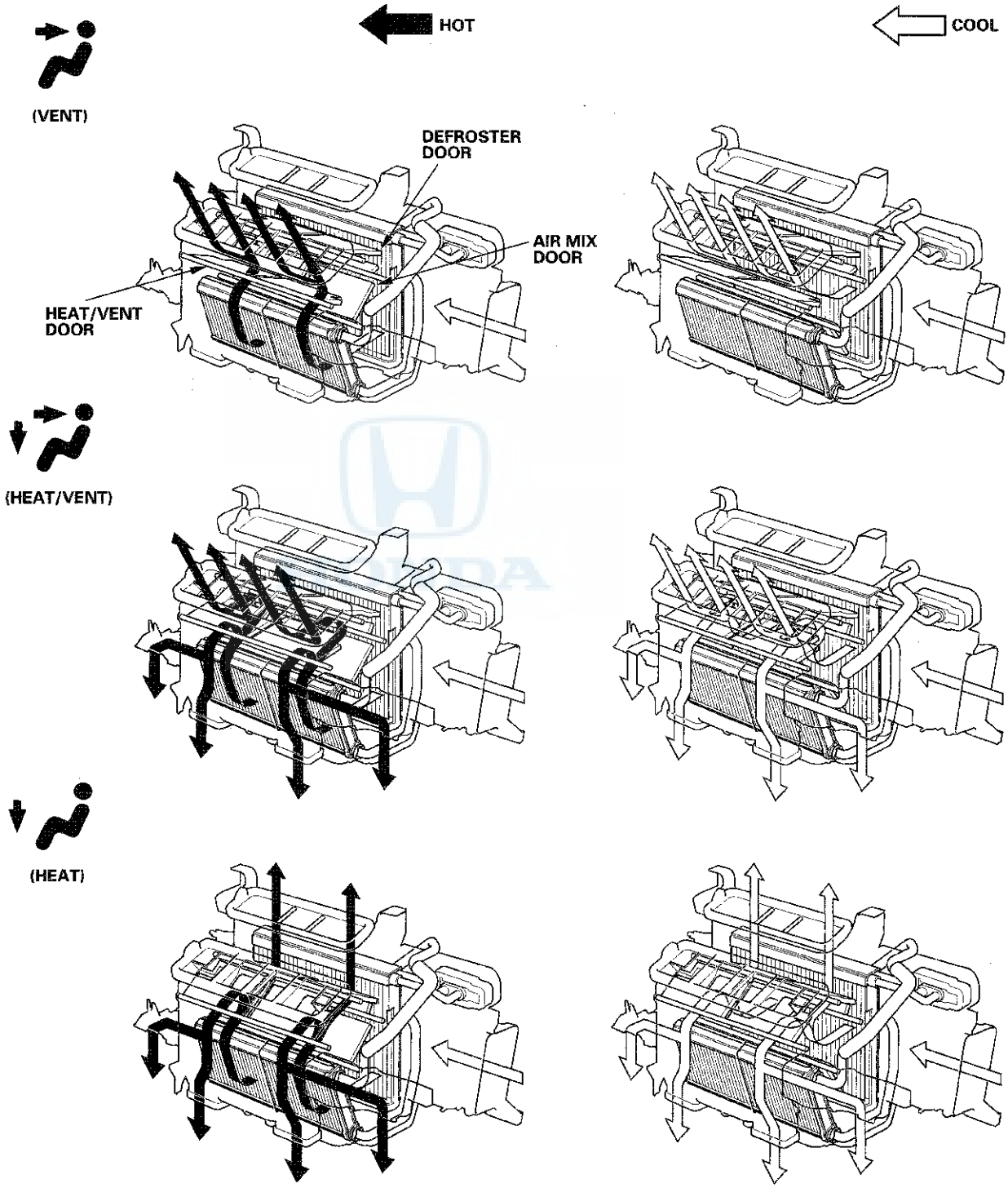

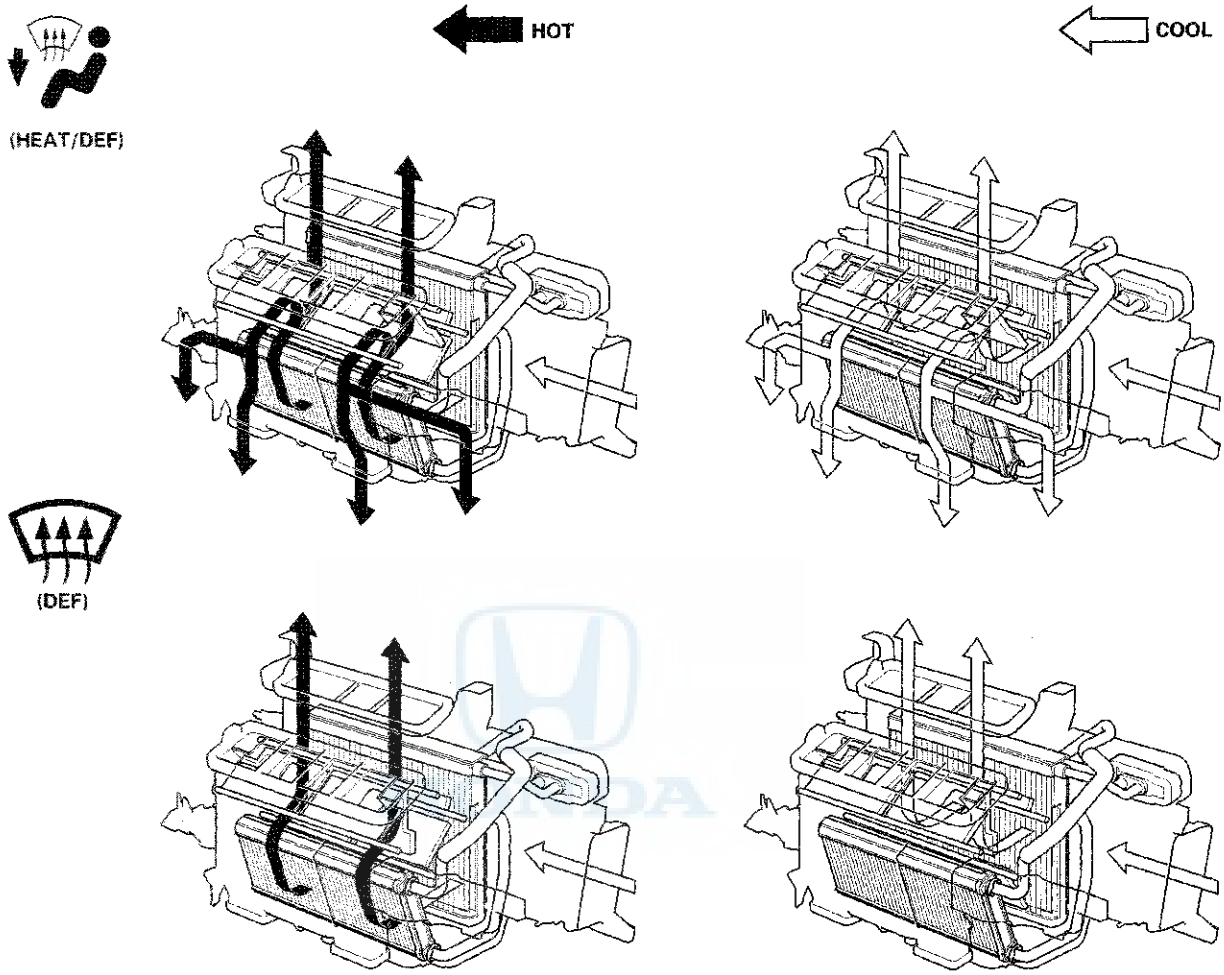

(cont'd)

System Description (cont'd)

HVAC Control Unit Inputs and Outputs

HVAC CONTROL UNIT 24P CONNECTOR

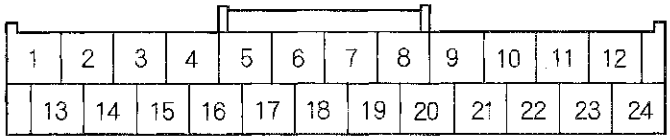

Wire side of female terminals

Cavity	Wire color	Terminal name	Description	Signal
1*2	GRN	MODE 4	Detects mode control motor position	With ignition switch ON (II): about 0 V or about 5.0 V (depending on mode control motor position)
2*2	BLU	MODE 3	Detects mode control motor position	With ignition switch ON (II): about 0 V or about 5.0 V (depending on mode control motor position)
3*2	PUR	MODE 2	Detects mode control motor position	With ignition switch ON (II): about 0 V or about 5.0 V (depending on mode control motor position)
4*2	ORN	MODE 1	Detects mode control motor position	With ignition switch ON (II): about 0 V or about 5.0 V (depending on mode control motor position)
5	PNK	AIR MIX HOT	Drives air mix control motor to HOT	With ignition switch ON (II) and air mix control motor moving to HOT: battery voltage
6	LT BLU	AIR MIX COOL	Drives air mix control motor to COOL	With ignition switch ON (II) and air mix control motor moving to COOL: battery voltage
7	GRN	M-DEF	Drives mode control motor to DEF	With ignition switch ON (II) and mode control motor moving to DEF: battery voltage
8	WHT	M-VENT	Drives mode control motor to VENT	With ignition switch ON (II) and mode control motor moving to VENT: battery voltage
9*1	ORN	M-REC	Drives recirculation control motor to RECIRCULATE	With ignition switch ON (II) and recirculation control motor moving to RECIRCULATE: battery voltage
9*2	ORN	M-REC	Drives recirculation control motor to RECIRCULATE	With ignition switch ON (II) and recirculation control motor moving to RECIRCULATE: about 0 V

* 1: 4-door with M/T, 2-door
* 2: 4-door with A/T

Cavity	Wire color	Terminal name	Description	Signal
10	PUR	M-FRS	Drives recirculation control motor FRESH side	With ignition switch ON (II) and recirculation control motor change to the RECERCU position: connected to ground at several seconds
11	LT GRN	IG2	IG2 power source	With ignition switch ON (II): battery voltage
12	GRY	SMALL	Inputs voltage for illumination	With combination light switch ON: battery voltage
13	BLK	S5V	Output sensor 5 V	With ignition switch ON (II): about 5.0 V
14	BRN	Teva	Detects evaporator temperature sensor signal	With ignition switch ON (II): about 1.0—4.0 V (depending on evaporator temperature)
15	RED	SENS-COM	Sensor ground	Less than 0.5 V at all times
16*1	LT GRN	MDD-P	Outputs mode control motor potentiometer signal	———
17	GRY	AMD-P	Outputs air mix control motor potentiometer signal	With ignition switch ON (II): about 0.5—4.5 V (depending on air mix motor position)
18	YEL	BLW-G	Outputs power transistor gate voltage	With ignition switch ON (II) and fan control switch OFF: less than 0.5 V With ignition switch ON (II) and fan control switch ON: about 4.0 V battery voltage (depending on blower motor control)
19	BLU	BLW-V	Feedback signal of power transistor drain voltage	With ignition switch ON (II): about 0 V battery voltage (depending on blower motor speed)
20*1	PNK	RFD-P	Outputs recirculation control motor potentiometer signal	———
21	LT BLU	ACS	Outputs A/C on/off signal	With ignition switch ON (II), A/C pressure switch ON, and A/C compressor clutch ON: less than 0.5 V With ignition switch ON (II), A/C pressure switch ON, and A/C compressor clutch OFF: battery voltage
22	RED	RrDEF Ry	Drives rear window defogger relay	———
23	BLK	GND	Ground for HVAC control unit (G401)	Less than 0.5 V at all times
24	RED	ILL —	Detects illumination control signal	With illumination switch ON: changed voltage (depending on dash light brightness controller)

* 1: 4-door with M/T, 2-door
* 2: 4-door with A/T

Circuit Diagram

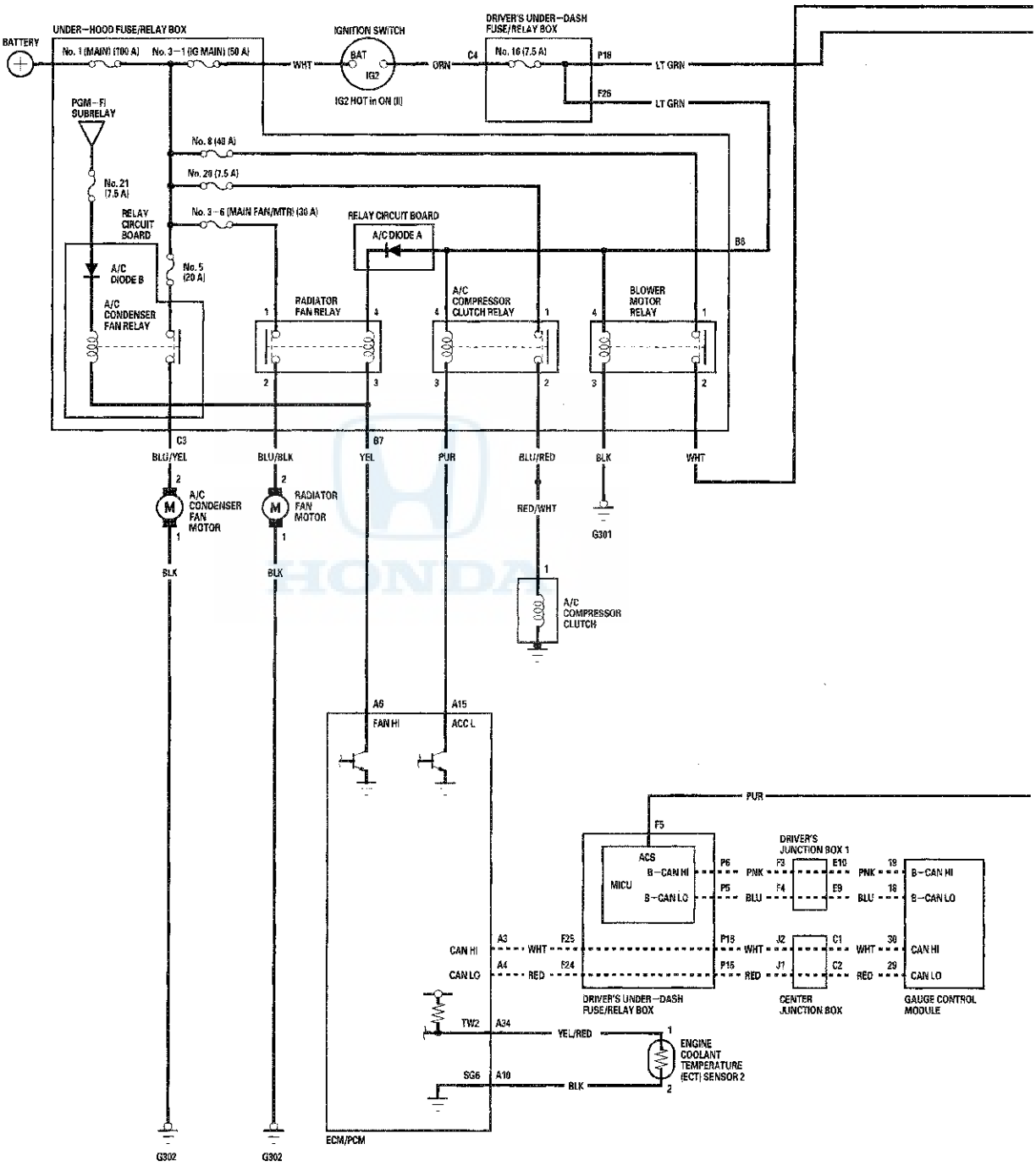

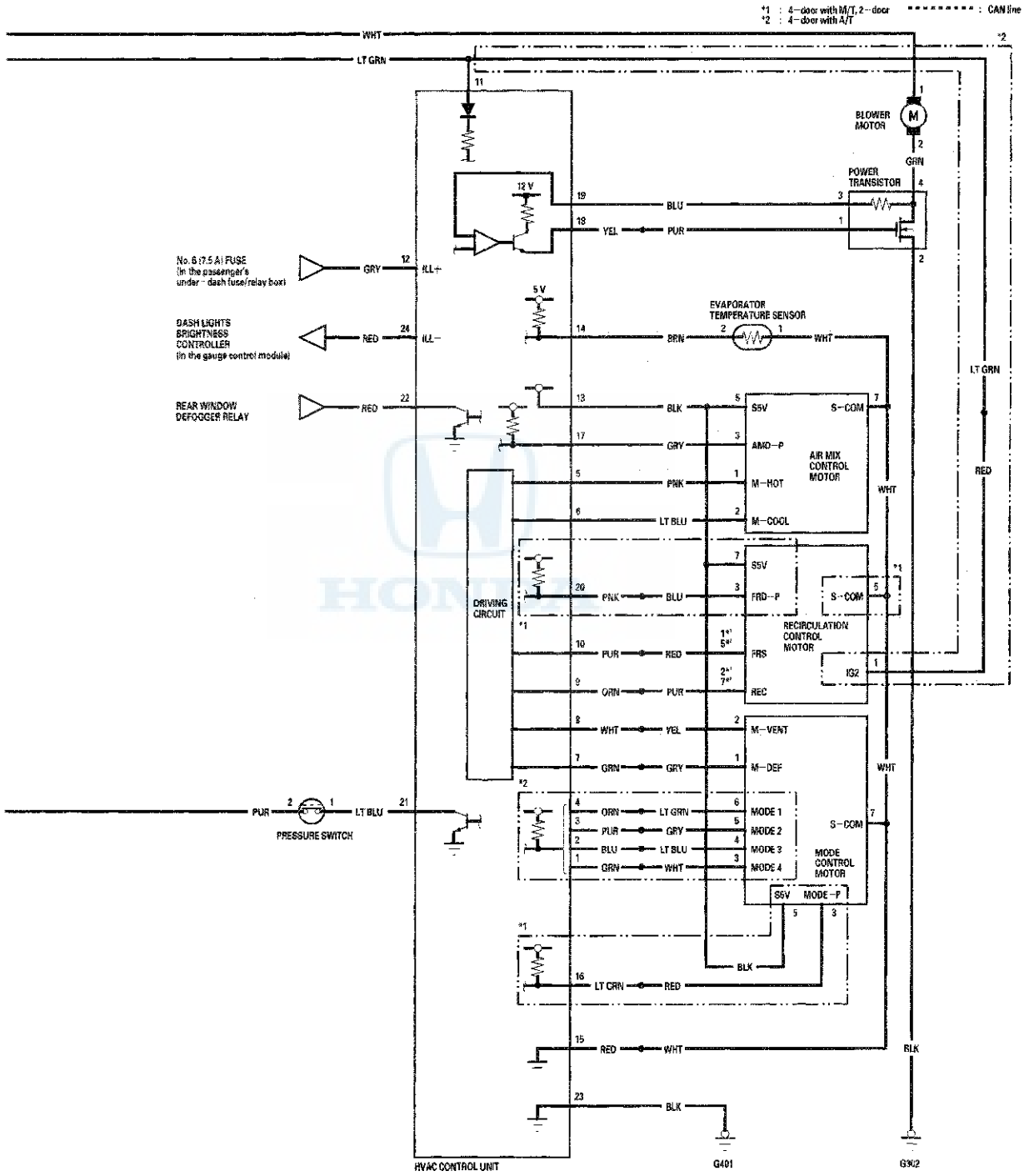
*1 : 4-door with M/T, 2-door
*2 : 4-door with A/T
CAN line
WHT
LT GRN
BLOWER MOTOR
GRN
POWER TRANSISTOR
12 V
BLU
YEL
PUR
No. 6 (7.5 A) FUSE (in the passenger's under-dash fuse/relay box)
GRY
ILL+
DASH LIGHTS BRIGHTNESS CONTROLLER (in the gauge control module)
RED
ILL−
5 V
EVAPORATOR TEMPERATURE SENSOR
BRN
REAR WINDOW DEFOGGER RELAY
BLK
S5V
S-COM
AMD-P
AIR MIX CONTROL MOTOR
PNK
M-HOT
LT BLU
M-COOL
DRIVING CIRCUIT
FRD-P
RECIRCULATION CONTROL MOTOR
FRS
REC
IG2
M-VENT
M-DEF
ORN
MODE 1
MODE 2
MODE 3
MODE 4
MODE CONTROL MOTOR
MODE-P
PRESSURE SWITCH
HVAC CONTROL UNIT
G401
G302

DTC Troubleshooting

DTC indicator 1: An Open in the Air Mix Control Motor Circuit

1. Turn the ignition switch to LOCK (0), and then to ON (II).

2. Do the self-diagnostic function with the HVAC control unit (see page 21-10).

3. Check for DTCs.

   Is DTC 1 indicated?

   YES—Go to step 4.

   NO—Intermittent failure, check for loose wires or poor connections on the air mix control motor circuit. ■

4. Turn the ignition switch to LOCK (0).

5. Test the air mix control motor (see page 21-56).

   Is the air mix control motor OK?

   YES—Go to step 6.

   NO—Replace the air mix control motor (see page 21-57). ■

6. Disconnect the air mix control motor 7P connector.

7. Disconnect the HVAC control unit 24P connector.

8. Check for continuity between the following terminals of the HVAC control unit 24P connector and the air mix control motor 7P connector.

24P:	7P:
No. 13	No. 5
No. 15	No. 7
No. 17	No. 3

HVAC CONTROL UNIT 24P CONNECTOR
Wire side of female terminals

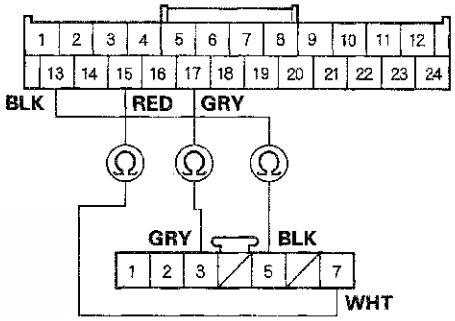

AIR MIX CONTROL MOTOR 7P CONNECTOR
Wire side of female terminals

Is there continuity?

YES—Check for loose wires or poor connections at the HVAC control unit 24P connector, and at the air mix control motor 7P connector. If the connections are good, substitute a known-good HVAC control unit and recheck. If the symptom/indication goes away, replace the original HVAC control unit. ■

NO—Repair open in the wire(s) between the HVAC control unit and the air mix control motor. ■

DTC indicator 2: A Short in the Air Mix Control Motor Circuit

1. Turn the ignition switch to LOCK (0), and then to ON (II).

2. Do the self-diagnostic function with the HVAC control unit (see page 21-10).

3. Check for DTCs.

   Is DTC 2 indicated?

   YES—Go to step 4.

   NO—Intermittent failure. Check for damaged wires or connections in the air mix control motor circuit. ■

4. Turn the ignition switch to LOCK (0).

5. Test the air mix control motor (see page 21-56).

   Is the air mix control motor OK?

   YES—Go to step 6.

   NO—Replace the air mix control motor (see page 21-57). ■

6. Disconnect the air mix control motor 7P connector.

7. Disconnect the HVAC control unit 24P connector.

8. Check for continuity between body ground and the HVAC control unit 24P connector No. 13 and No. 17 terminals individually.

HVAC CONTROL UNIT 24P CONNECTOR

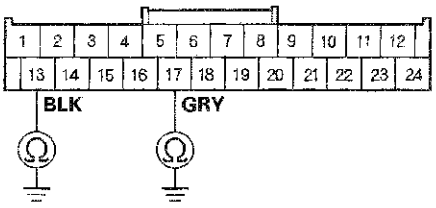

Wire side of female terminals

Is there continuity?

YES—Repair short to body ground in the wire(s) between the HVAC control unit and the air mix control motor. ■

NO—Go to step 9.

9. Check for continuity between the HVAC control unit 24P connector No. 13 and No. 17 terminals.

HVAC CONTROL UNIT 24P CONNECTOR

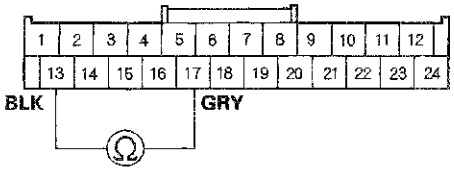

Wire side of female terminals

Is there continuity?

YES—Repair short in the wires. ■

NO—Go to step 10.

(cont'd)

DTC Troubleshooting (cont'd)

10. Turn the ignition switch to ON (II), and check the same terminals for voltage between each terminal and body ground.

HVAC CONTROL UNIT 24P CONNECTOR

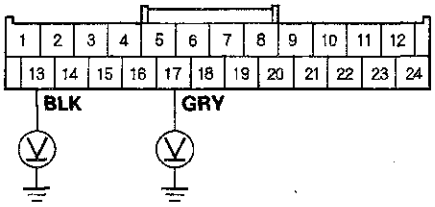

Wire side of female terminals

Is there any voltage?

YES—Repair short to power in the wire(s) between the HVAC control unit and the air mix control motor. This short may also damage HVAC control unit. Repair short to power before replacing the HVAC control unit.■

NO—Substitute a known-good HVAC control unit and recheck. If the symptom/indication goes away, and the air mix control motor runs, replace the original HVAC control unit.■

DTC indicator 3: A Problem in the Air Mix Control Linkage, Door, or Motor Circuit

1. Turn the ignition switch to LOCK (0), and then to ON (II).

2. Do the self-diagnostic function with the HVAC control unit (see page 21-10).

3. Check for DTCs.

   Is DTC 3 indicated?

   YES—Go to step 4.

   NO—Intermittent failure, check for loose wires or poor connections on the air mix control motor circuit.■

4. Turn the ignition switch to LOCK (0).

5. Test the air mix control motor (see page 21-56).

   Is the air mix control motor OK?

   YES—Go to step 6.

   NO—Replace the air mix control motor (see page 21-57), or repair the air mix control linkage or door.■

6. Disconnect the air mix control motor 7P connector.

7. Disconnect the HVAC control unit 24P connector.

8. Check for continuity between the following terminals of the HVAC control unit 24P connector and the air mix control motor 7P connector.

24P:	7P:
No. 5	No. 1
No. 6	No. 2

HVAC CONTROL UNIT 24P CONNECTOR
Wire side of female terminals

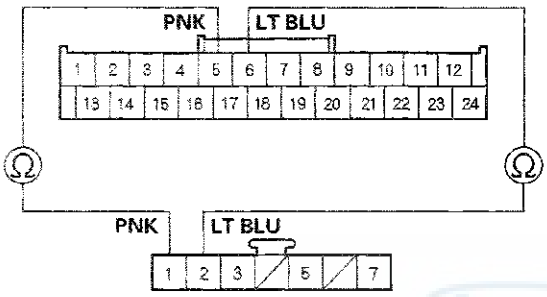

AIR MIX CONTROL MOTOR 7P CONNECTOR
Wire side of female terminals

Is there continuity?

YES—Go to step 9.

NO—Repair open in the wire(s) between the HVAC control unit and the air mix control motor. ■

9. Check for continuity between body ground and the HVAC control unit 24P connector No. 5 and No. 6 terminals individually.

HVAC CONTROL UNIT 24P CONNECTOR

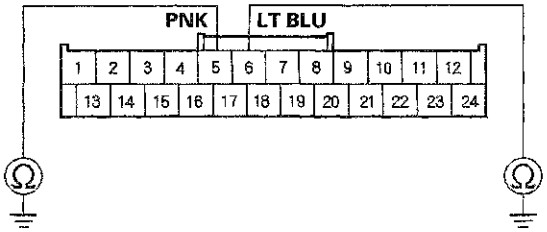

Wire side of female terminals

Is there continuity?

YES—Repair short to body ground in the wire(s) between the HVAC control unit and the air mix control motor. ■

NO—Substitute a known-good HVAC control unit, and recheck. If the symptom/indication goes away, replace the original HVAC control unit. ■

DTC Troubleshooting (cont'd)

DTC indicator 4: An Open in the Mode Control Motor Circuit

4-door with M/T, 2-door

1. Turn the ignition switch to LOCK (0), and then to ON (II).

2. Do the self-diagnostic function with the HVAC control unit (see page 21-10).

3. Check for DTCs.

   Is DTC 4 indicated?

   YES—Go to step 4.

   NO—Intermittent failure, check for loose wires or poor connections on the mode control motor circuit. ■

4. Turn the ignition switch to LOCK (0).

5. Test the mode control motor (see page 21-58).

   Is the mode control motor OK?

   YES—Go to step 6.

   NO—Replace the mode control motor (see page 21-59). ■

6. Disconnect the mode control motor 7P connector.

7. Disconnect the HVAC control unit 24P connector.

8. Check for continuity between the following terminals of the HVAC control unit 24P connector and the mode control motor 7P connector.

24P:	7P:
No. 13	No. 5
No. 15	No. 7
No. 16	No. 3

HVAC CONTROL UNIT 24P CONNECTOR
Wire side of female terminals

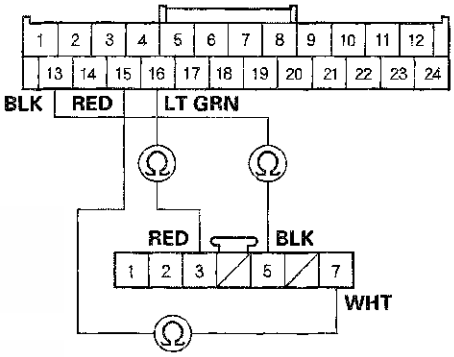

MODE CONTROL MOTOR 7P CONNECTOR
Wire side of female terminals

Is there continuity?

YES—Check for loose wires or poor connections at the HVAC control unit 24P connector, and at the mode control motor 7P connector. If the connections are good, substitute a known-good HVAC control unit and recheck. If the symptom/indication goes away, replace the original HVAC control unit. ■

NO—Repair open in the wire(s) between the HVAC control unit and the mode control motor. ■

DTC indicator 5: A Short in the Mode Control Motor Circuit

4-door with M/T, 2-door

1. Turn the ignition switch to LOCK (0), and then to ON (II).

2. Do the self-diagnostic function with the HVAC control unit (see page 21-10).

3. Check for DTCs.

   Is DTC 5 indicated?

   YES—Go to step 4.

   NO—Intermittent failure. Check for damaged wires or connections in the mode control motor circuit. ■

4. Turn the ignition switch to LOCK (0).

5. Test the mode control motor (see page 21-58).

   Is the mode control motor OK?

   YES—Go to step 6.

   NO—Replace the mode control motor (see page 21-59). ■

6. Disconnect the mode control motor 7P connector.

7. Disconnect the HVAC control unit 24P connector.

8. Check for continuity between body ground and the HVAC control unit 24P connector No. 13 and No. 16 terminals individually.

HVAC CONTROL UNIT 24P CONNECTOR

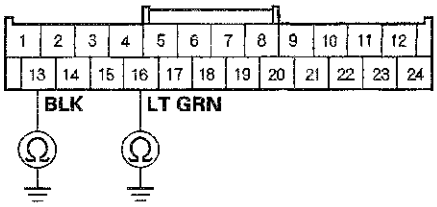

Wire side of female terminals

Is there continuity?

YES—Repair short to body ground in the wire(s) between the HVAC control unit and the mode control motor. ■

NO—Go to step 9.

9. Check for continuity between the HVAC control unit 24P connector No. 13 and No. 16 terminals.

HVAC CONTROL UNIT 24P CONNECTOR

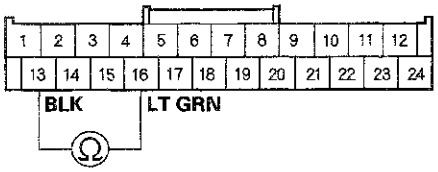

Wire side of female terminals

Is there continuity?

YES—Repair short in the wires. ■

NO—Go to step 10.

(cont'd)

DTC Troubleshooting (cont'd)

10. Turn the ignition switch to ON (II), and check the same terminals for voltage between each terminal and body ground.

HVAC CONTROL UNIT 24P CONNECTOR

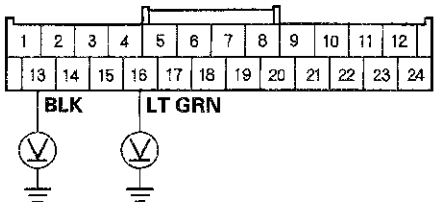

Wire side of female terminals

Is there any voltage?

YES—Repair short to power in the wire(s) between the HVAC control unit and the mode control motor. This short may also damage the HVAC control unit. Repair short to power before replacing the HVAC control unit. ■

NO—Substitute a known-good HVAC control unit and recheck. If the symptom/indication goes away and the mode control motor runs, replace the original HVAC control unit. ■

DTC indicator 6: A Problem in the Mode Control Linkage, Door, or Motor Circuit

4-door with M/T, 2 door

1. Turn the ignition switch to LOCK (0), and then to ON (II).
2. Do the self-diagnostic function with the HVAC control unit (see page 21-10).
3. Check for DTCs.

   Is DTC 6 indicated?

   YES—Go to step 4.

   NO—Intermittent failure, check for loose wires or poor connections on the mode control motor circuit. ■

4. Turn the ignition switch to LOCK (0).
5. Test the mode control motor (see page 21-58).

   Is the mode control motor OK?

   YES—Go to step 6.

   NO—Replace the mode control motor (see page 21-59), or repair the mode control linkage or door. ■

6. Disconnect the mode control motor 7P connector.
7. Disconnect the HVAC control unit 24P connector.

8. Check for continuity between the following terminals of the HVAC control unit 24P connector and the mode control motor 7P connector.

24P:	7P:
No. 7	No. 1
No. 8	No. 2

HVAC CONTROL UNIT 24P CONNECTOR
Wire side of female terminals

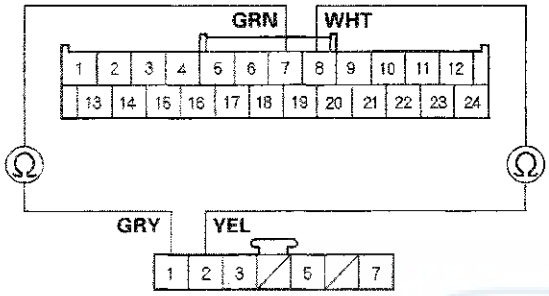

MODE CONTROL MOTOR 7P CONNECTOR
Wire side of female terminals

Is there continuity?

YES—Go to step 9.

NO—Repair open in the wire(s) between the HVAC control unit and the mode control motor. ■

9. Check for continuity between body ground and the HVAC control unit 24P connector No. 7 and No. 8 terminals individually.

HVAC CONTROL UNIT 24P CONNECTOR

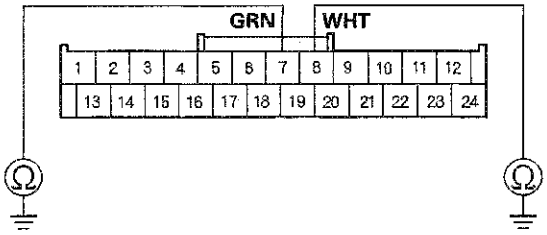

Wire side of female terminals

Is there continuity?

YES—Repair short to body ground in the wire(s) between the HVAC control unit and the mode control motor. ■

NO—Substitute a known-good HVAC control unit, and recheck. If the symptom/indication goes away, replace the original HVAC control unit. ■

DTC Troubleshooting (cont'd)

DTC indicator 7: An Open in the Recirculation Control Motor Circuit

4-door with M/T, 2-door

1. Turn the ignition switch to LOCK (0), and then to ON (II).

2. Do the self-diagnostic function with the HVAC control unit (see page 21-10).

3. Check for DTCs.

   Is DTC 7 indicated?

   YES—Go to step 4.

   NO—Intermittent failure, check for loose wires or poor connections on the recirculation control motor circuit. ■

4. Turn the ignition switch to LOCK (0).

5. Test the recirculation control motor (see page 21-60).

   Is the recirculation control motor OK?

   YES—Go to step 6.

   NO—Replace the recirculation control motor (see page 21-61). ■

6. Disconnect the recirculation control motor 7P connector.

7. Disconnect the HVAC control unit 24P connector.

8. Check for continuity between the following terminals of the HVAC control unit 24P connector and the recirculation control motor 7P connector.

24P:	7P:
No. 13	No. 7
No. 15	No. 5
No. 20	No. 3

HVAC CONTROL UNIT 24P CONNECTOR
Wire side of female terminals

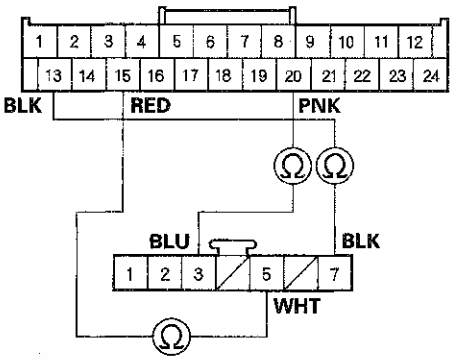

RECIRCULATION CONTROL MOTOR 7P CONNECTOR
Wire side of female terminals

Is there continuity?

YES—Check for loose wires or poor connections at the HVAC control unit 24P connector, and at the recirculation control motor 7P connector. If the connections are good, substitute a known-good HVAC control unit and recheck. If the symptom/indication goes away, replace the original HVAC control unit. ■

NO—Repair open in the wire(s) between the HVAC control unit and the recirculation control motor. ■

DTC indicator 8: A Short in the Recirculation Control Motor Circuit

4-door with M/T, 2-door

1. Turn the ignition switch to LOCK (0), and then to ON (II).

2. Do the self-diagnostic function with the HVAC control unit (see page 21-10).

3. Check for DTCs.

   Is DTC 8 indicated?

   YES—Go to step 4.

   NO—Intermittent failure. Check for damaged wires or connections in the recirculation control motor circuit. ■

4. Turn the ignition switch to LOCK (0).

5. Test the recirculation control motor (see page 21-60).

   Is the recirculation control motor OK?

   YES—Go to step 6.

   NO—Replace the recirculation control motor (see page 21-61). ■

6. Disconnect the recirculation control motor 7P connector.

7. Disconnect the HVAC control unit 24P connector.

8. Check for continuity between body ground and the HVAC control unit 24P connector No. 13 and No. 20 terminals individually.

HVAC CONTROL UNIT 24P CONNECTOR

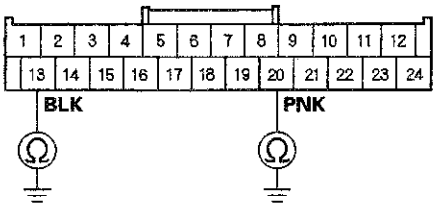

Wire side of female terminals

Is there continuity?

YES—Repair short to body ground in the wire(s) between the HVAC control unit and the recirculation control motor. ■

NO—Go to step 9.

9. Check for continuity between the HVAC control unit 24P connector No. 13 and No. 20 terminals.

HVAC CONTROL UNIT 24P CONNECTOR

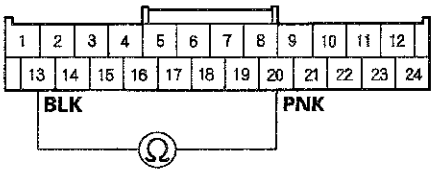

Wire side of female terminals

Is there continuity?

YES—Repair short in the wires. ■

NO—Go to step 10.

(cont'd)

DTC Troubleshooting (cont'd)

10. Turn the ignition switch to ON (II), and check the same terminals for voltage between each terminal and body ground.

HVAC CONTROL UNIT 24P CONNECTOR

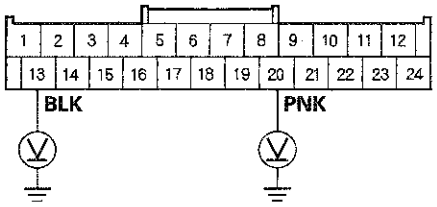

Wire side of female terminals

Is there any voltage?

YES—Repair short to power in the wire(s) between the HVAC control unit and the recirculation control motor. This short may also damage the HVAC control unit. Repair short to power before replacing the HVAC control unit. ■

NO—Substitute a known-good HVAC control unit and recheck. If the symptom/indication goes away and the recirculation control motor runs, replace the original HVAC control unit. ■

DTC indicator 9: A Problem in the Recirculation Control Linkage, Door, or Motor Circuit

4-door with M/T, 2-door

1. Turn the ignition switch to LOCK (0), and then to ON (II).

2. Do the self-diagnostic function with the HVAC control unit (see page 21-10).

3. Check for DTCs.

   Is DTC 9 indicated?

   YES—Go to step 4.

   NO—Intermittent failure, check for loose wires or poor connections on the recirculation control motor circuit. ■

4. Turn the ignition switch to LOCK (0).

5. Test the recirculation control motor (see page 21-60).

   Is the recirculation control motor OK?

   YES—Go to step 6.

   NO—Replace the recirculation control motor (see page 21-61), or repair the recirculation control linkage or door. ■

6. Disconnect the recirculation control motor 7P connector.

7. Disconnect the HVAC control unit 24P connector.

8. Check for continuity between the following terminals of the HVAC control unit 24P connector and the recirculation control motor 7P connector.

24P:	7P:
No. 9	No. 2
No. 10	No. 1

HVAC CONTROL UNIT 24P CONNECTOR
Wire side of female terminals

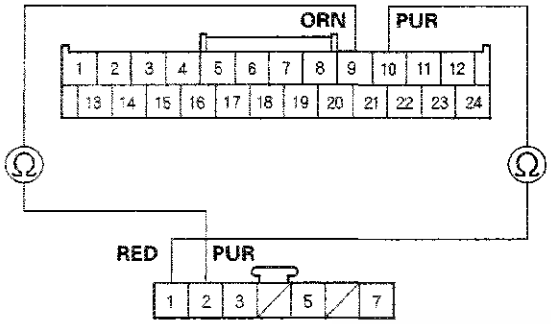

RECIRCULATION CONTROL MOTOR 7P CONNECTOR
Wire side of female terminals

Is there continuity?

YES—Go to step 9.

NO—Repair open in the wire(s) between the HVAC control unit and the recirculation control motor. ■

9. Check for continuity between body ground and the HVAC control unit 24P connector No. 9 and No. 10 terminals individually.

HVAC CONTROL UNIT 24P CONNECTOR

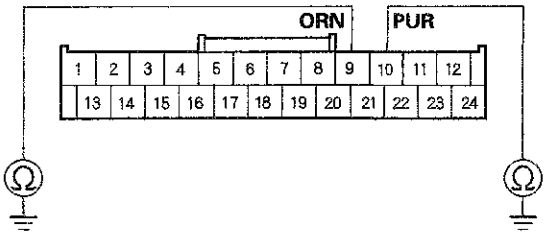

Wire side of female terminals

Is there continuity?

YES—Repair short to body ground in the wire(s) between the HVAC control unit and the recirculation control motor. ■

NO—Substitute a known-good HVAC control unit, and recheck. If the symptom/indication goes away, replace the original HVAC control unit. ■

DTC Troubleshooting (cont'd)

DTC indicator 10: An Open or Short in the Mode Control Motor Circuit

4-door with A/T

1. Turn the ignition switch to LOCK (0), and then to ON (II).

2. Do the self-diagnostic function with the HVAC control unit (see page 21-10).

3. Check for DTCs.

   Is DTC 10 indicated?

   YES—Go to step 4.

   NO—Intermittent failure, check for loose wires or poor connections on the mode control motor circuit. ■

4. Turn the ignition switch to LOCK (0).

5. Test the mode control motor (see page 21-57).

   Is the mode control motor OK?

   YES—Go to step 6.

   NO—Replace the mode control motor (see page 21-59). ■

6. Disconnect the mode control motor 7P connector.

7. Disconnect the HVAC control unit 24P connector.

8. Check for continuity between the following terminals of the HVAC control unit 24P connector and the mode control motor 7P connector.

24P:	7P:
No. 1	No. 3
No. 2	No. 4
No. 3	No. 5
No. 4	No. 6
No. 15	No. 7

HVAC CONTROL UNIT 24P CONNECTOR
Wire side of female terminals

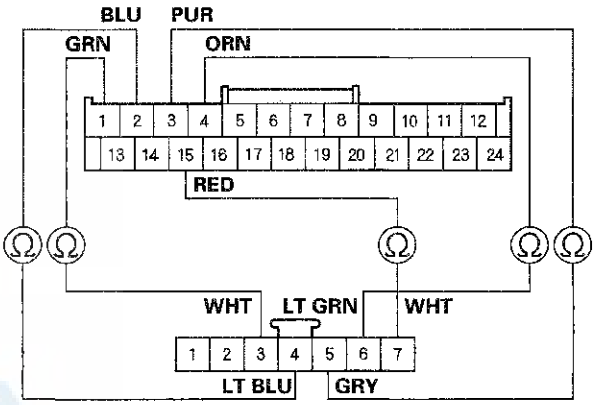

MODE CONTROL MOTOR 7P CONNECTOR
Wire side of female terminals

Is there continuity?

YES—Go to step 9.

NO—Repair open in the wire(s) between the HVAC control unit and the mode control motor. ■

9. Check for continuity between body ground and the HVAC control unit 24P connector No. 1, 2, 3, and 4 terminals individually.

HVAC CONTROL UNIT 24P CONNECTOR

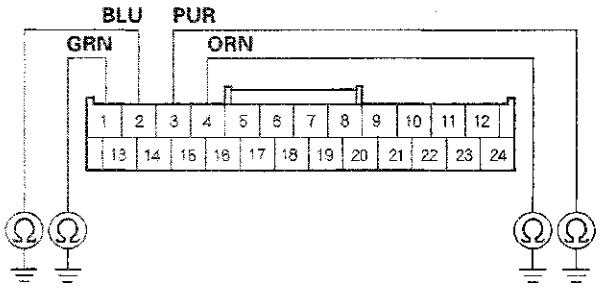

Wire side of female terminals

Is there continuity?

YES—Repair short to body ground in the wire(s) between the HVAC control unit and the mode control motor. ■

NO—Go to step 10.

10. Check for continuity between the HVAC control unit 24P connector terminals as follows.

From terminal	To terminals
1	2, 3, 4
2	3, 4
3	4

Is there continuity between any of the terminals?

YES—Repair the short in the wires. ■

NO—Go to step 11.

11. Turn the ignition switch to ON (II), and check the same terminals for voltage between each terminal and body ground.

HVAC CONTROL UNIT 24P CONNECTOR

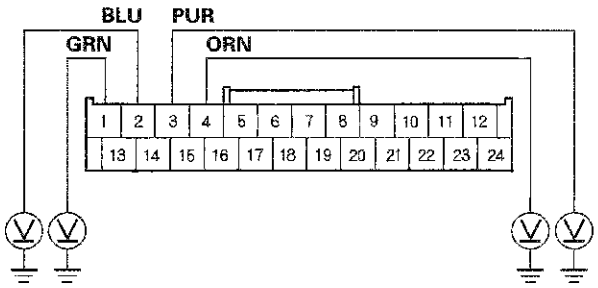

Wire side of female terminals

Is there any voltage?

YES—Repair short to power in the wire(s) between the HVAC control unit and the mode control motor. This short may also damage the HVAC control unit. Repair the short to power before replacing the HVAC control unit. ■

NO—Check for loose wires or poor connections at the HVAC control unit 24P connector, and at the mode control motor 7P connector. If the connections are good, substitute a known-good HVAC control unit, and recheck. If the symptom/indication goes away, replace the original HVAC control unit. ■

DTC Troubleshooting (cont'd)

DTC indicator 11: A Problem in the Mode Control Linkage, Doors, or Motor Circuit

4-door with A/T

1. Turn the ignition switch to LOCK (0), and then to ON (II).

2. Do the self-diagnostic function with the HVAC control unit (see page 21-10).

3. Check for DTCs.

   Is DTC 11 indicated?

   YES—Go to step 4.

   NO—Intermittent failure, check for loose wires or poor connections on the mode control motor circuit.■

4. Turn the ignition switch to LOCK (0).

5. Test the mode control motor (see page 21-57).

   Is the mode control motor OK?

   YES—Go to step 6.

   NO—Replace the mode control motor (see page 21-59), or repair the mode control linkage or doors.■

6. Disconnect the mode control motor 7P connector.

7. Disconnect the HVAC control unit 24P connector.

8. Check for continuity between the following terminals of the HVAC control unit 24P connector and the mode control motor 7P connector.

24P:	7P:
No. 7	No. 1
No. 8	No. 2

HVAC CONTROL UNIT 24P CONNECTOR
Wire side of female terminals

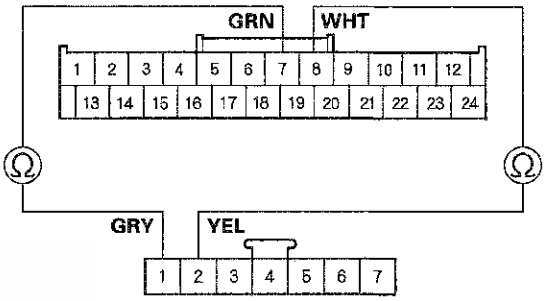

MODE CONTROL MOTOR 7P CONNECTOR
Wire side of female terminals

Is there continuity?

YES—Go to step 9.

NO—Repair open in the wire(s) between the HVAC control unit and the mode control motor.■

9. Check for continuity between body ground and the HVAC control unit 24P connector No. 7 and No. 8 terminals individually.

HVAC CONTROL UNIT 24P CONNECTOR

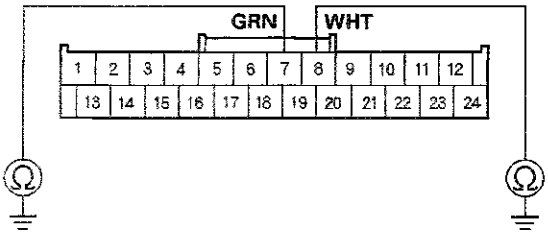

Wire side of female terminals

Is there continuity?

YES—Repair short to body ground in the wire(s) between the HVAC control unit and the mode control motor.■

NO—Substitute a known-good HVAC control unit, and recheck. If the symptom/indication goes away, replace the original HVAC control unit.■

DTC indicator 12: A Problem in the Blower Motor Circuit

1. Turn the ignition switch to LOCK (0), and then to ON (II).

2. Do the self-diagnostic function with the HVAC control unit (see page 21-10).

3. Check for DTCs.

   Is DTC 12 indicated?

   YES—Go to step 4.

   NO—Intermittent failure, check for loose wires or poor connections on the blower motor circuit.■

4. Turn the ignition switch to LOCK (0).

5. Check the No. 8 (40 A) fuse in the under-hood fuse/relay box, and the No. 16 (7.5 A) fuse in the driver's under-dash fuse/relay box.

   Are the fuses OK?

   YES—Go to step 6.

   NO—Replace the fuse(s), and recheck. If the fuse(s) blow again, check for a short in the No. 8 (40 A) fuse and the No. 16 (7.5 A) fuse circuits.■

6. Connect the blower motor 2P connector No. 2 terminal to body ground with a jumper wire.

BLOWER MOTOR 2P CONNECTOR

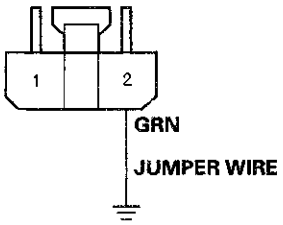

Wire side of female terminals

(cont'd)

DTC Troubleshooting (cont'd)

7. Turn the ignition switch to ON (II).

   Does the blower motor run?

   YES—Go to step 8.

   NO—Go to step 23.

8. Turn the ignition switch to LOCK (0).

9. Disconnect the jumper wire.

10. Disconnect the power transistor 4P connector.

11. Check for continuity between the power transistor 4P connector No. 2 terminal and body ground.

POWER TRANSISTOR 4P CONNECTOR

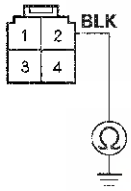

Wire side of female terminals

Is there continuity?

YES—Go to step 12.

NO—Check for an open in the wire between the power transistor and body ground. If the wire is OK, check for poor ground at G302 (see page 22-30).■

12. Connect the power transistor 4P connector No. 2 and No. 4 terminals with a jumper wire.

POWER TRANSISTOR 4P CONNECTOR

Wire side of female terminals

13. Turn the ignition switch to ON (II).

    Does the blower motor run at high speed?

    YES—Go to step 14.

    NO—Repair open in the GRN wire between the power transistor and the blower motor.■

14. Turn the ignition switch to LOCK (0).

15. Disconnect the jumper wire.

16. Disconnect the HVAC control unit 24P connector.

17. Check for continuity between body ground and the HVAC control unit 24P connector No. 18 and No. 19 terminals individually.

HVAC CONTROL UNIT 24P CONNECTOR

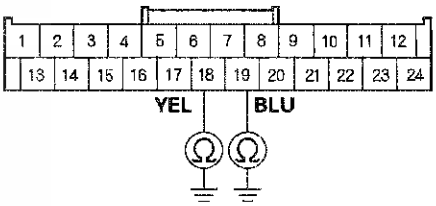

Wire side of female terminals

Is there continuity?

YES—Repair short to body ground in the wire(s) between the HVAC control unit and the power transistor.■

NO—Go to step 18.

18. Check for continuity between the following terminals of the HVAC control unit 24P connector and the power transistor 4P connector.

24P:	4P:
No. 18	No. 1
No. 19	No. 3

HVAC CONTROL UNIT 24P CONNECTOR
Wire side of female terminals

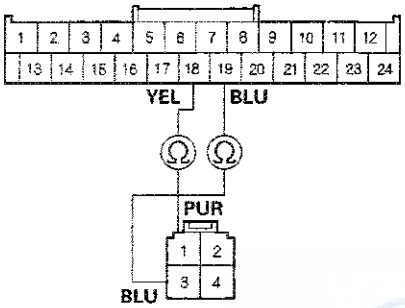

POWER TRANSISTOR 4P CONNECTOR
Wire side of female terminals

Is there continuity?

YES—Go to step 19.

NO—Repair open in the wire(s) between the HVAC control unit and the power transistor. ■

19. Turn the ignition switch to ON (II).

20. Measure the voltage between body ground and the HVAC control unit 24P connector No. 18 and No. 19 terminals individually.

HVAC CONTROL UNIT 24P CONNECTOR

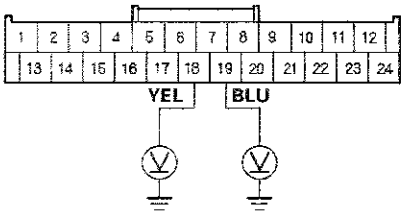

Wire side of female terminals

Is there any voltage?

YES—Repair short to power in the wires. ■

NO—Go to step 21.

21. Reconnect the HVAC control unit 24P connector.

22. Test the power transistor (see page 21-55).

Is the power transistor OK?

YES—Check for loose wires or poor connections at the HVAC control unit 24P connector, and at the power transistor 4P connector. If the connections are good, substitute a known-good HVAC control unit, and recheck. If the symptom/indication goes away, replace the original HVAC control unit. ■

NO—Replace the power transistor. ■

23. Disconnect the jumper wire.

24. Disconnect the blower motor 2P connector.

25. Measure the voltage between the blower motor 2P connector No. 1 terminal and body ground.

BLOWER MOTOR 2P CONNECTOR

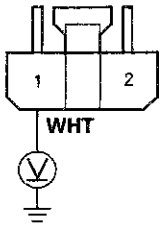

Wire side of female terminals

Is there battery voltage?

YES—Replace the blower motor (see page 21-64). ■

NO—Go to step 26.

26. Turn the ignition switch to LOCK (0).

27. Remove the blower motor relay from the under-hood fuse/relay box, and test it (see page 22-91).

Is the relay OK?

YES—Go to step 28.

NO—Replace the blower motor relay. ■

(cont'd)

DTC Troubleshooting (cont'd)

28. Measure the voltage between blower motor relay 4P socket terminal No. 1 and body ground.

BLOWER MOTOR RELAY 4P SOCKET

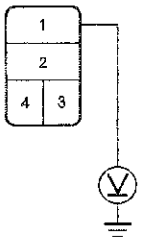

Terminal side of female terminals

Is there battery voltage?

YES—Go to step 29.

NO—Replace the under-hood fuse/relay box (see page 22-83). ■

29. Turn the ignition switch to ON (II).

30. Measure the voltage between blower motor relay 4P socket terminal No. 4 and body ground.

BLOWER MOTOR RELAY 4P SOCKET

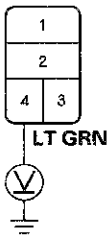

Terminal side of female terminals

Is there battery voltage?

YES—Go to step 31.

NO—Repair open in the wire between the No. 16 (7.5 A) fuse in the driver's under-dash fuse/relay box and the blower motor relay. ■

31. Turn the ignition switch to LOCK (0).

32. Check for continuity between blower motor relay 4P socket terminal No. 3 and body ground.

BLOWER MOTOR RELAY 4P SOCKET

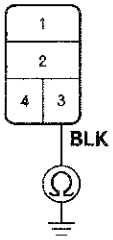

Terminal side of female terminals

Is there continuity?

YES—Repair open in the WHT wire between the blower motor relay and the blower motor. ■

NO—Check for an open in the wire between the blower motor relay and body ground. If the wire is OK, check for poor ground at G301 (see page 22-28). ■

DTC indicator 13: HVAC Control Unit Internal Error

NOTE: Check the battery condition (see page 22-88) and the charging system output (see page 4-27).

1. Turn the ignition switch to LOCK (0), and then to ON (II).

2. Do the self-diagnostic function with the HVAC control unit (see page 21-10).

3. Check for DTCs.

   Is DTC 13 indicated?

   YES—The HVAC control unit is faulty, replace the HVAC control unit (see page 21-61). ■

   NO—Intermittent failure, the HVAC control unit is OK at this time. Check for poor connections at the HVAC control unit and at G401 (with navigation and premium audio: see page 22-40, with premium audio: see page 22-42, without premium audio: see page 22-44). ■

DTC indicator 14: An Open in the Evaporator Temperature Sensor Circuit

1. Turn the ignition switch to LOCK (0), and then to ON (II).

2. Do the self-diagnostic function with the HVAC control unit (see page 21-10).

3. Check for DTCs.

   Is DTC 14 indicated?

   YES—Go to step 4.

   NO—Intermittent failure, check for loose wires or poor connections on the evaporator temperature sensor circuit. ■

4. Turn the ignition switch to LOCK (0).

5. Remove the evaporator temperature sensor (see page 21-64) and test it (see page 21-54).

   Is the evaporator temperature sensor OK?

   YES—Go to step 6.

   NO—Replace the evaporator temperature sensor (see page 21-64). ■

(cont'd)

DTC Troubleshooting (cont'd)

6. Disconnect the HVAC control unit 24P connector.

7. Check for continuity between the HVAC control unit 24P connector No. 14 terminal and the evaporator temperature sensor 2P connector No. 2 terminal.

HVAC CONTROL UNIT 24P CONNECTOR
Wire side of female terminals

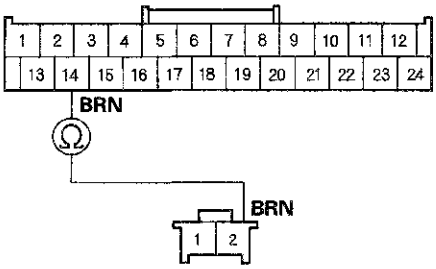

EVAPORATOR TEMPERATURE SENSOR 2P CONNECTOR
Wire side of female terminals

Is there continuity?

YES—Go to step 8.

NO—Repair open in the wire between the HVAC control unit and the evaporator temperature sensor. ■

8. Check for continuity between the HVAC control unit 24P connector No. 15 terminal and the evaporator temperature sensor 2P connector No. 1 terminal.

HVAC CONTROL UNIT 24P CONNECTOR
Wire side of female terminals

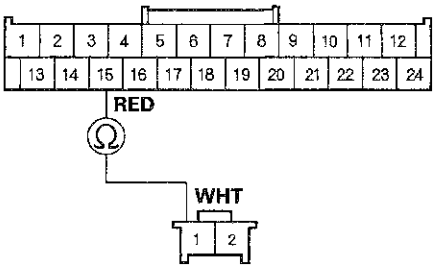

EVAPORATOR TEMPERATURE SENSOR 2P CONNECTOR
Wire side of female terminals

Is there continuity?

YES—Check for loose wires or poor connections at the HVAC control unit 24P connector, and at the evaporator temperature sensor 2P connector. If the connections are good, substitute a known-good HVAC control unit, and recheck. If the symptom/indication goes away, replace the original HVAC control unit. ■

NO—Repair open in the wire between the HVAC control unit and the evaporator temperature sensor. ■

DTC indicator 15: A Short in the Evaporator Temperature Sensor Circuit

1. Turn the ignition switch to LOCK (0), and then to ON (II).

2. Do the self-diagnostic function with the HVAC control unit (see page 21-10).

3. Check for DTCs.

   Is DTC 15 indicated?

   YES—Go to step 4.

   NO—Intermittent failure. Check for damaged wires or connections in the evaporator temperature sensor circuit.■

4. Turn the ignition switch to LOCK (0).

5. Remove the evaporator temperature sensor (see page 21-64) and test it (see page 21-54).

   Is the evaporator temperature sensor OK?

   YES—Go to step 6.

   NO—Replace the evaporator temperature sensor (see page 21-64).■

6. Disconnect the HVAC control unit 24P connector.

7. Check for continuity between body ground and the HVAC control unit 24P connector No. 14 terminal.

HVAC CONTROL UNIT 24P CONNECTOR

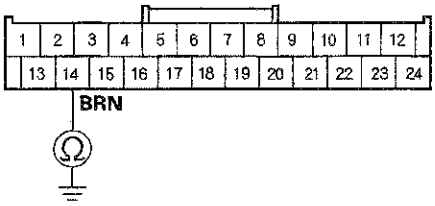

Wire side of female terminals

Is there continuity?

YES—Repair short to body ground in the wire between the HVAC control unit and the evaporator temperature sensor.■

NO—Go to step 8.

8. Check for continuity between the HVAC control unit 24P connector No. 14 and No. 15 terminals.

HVAC CONTROL UNIT 24P CONNECTOR

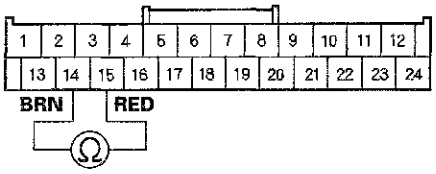

Wire side of female terminals

Is there continuity?

YES—Repair short in the wires between the HVAC control unit and the evaporator temperature sensor.■

NO—Substitute a known-good HVAC control unit, and recheck. If the symptom/indication goes away, replace the original HVAC control unit.■

Recirculation Control Motor Circuit Troubleshooting

4-door with A/T

1. Check the No. 16 (7.5 A) fuse in the driver's under-dash fuse/relay box.

   Is the fuse OK?

   YES—Go to step 2.

   NO—Replace the fuse, and recheck. If the fuse blows again, check for a short in the No. 16 (7.5 A) fuse circuit. ■

2. Disconnect the recirculation control motor 7P connector.

3. Turn the ignition switch to ON (II).

4. Measure the voltage between the recirculation control motor 7P connector No. 1 terminal and body ground.

RECIRCULATION CONTROL MOTOR 7P CONNECTOR

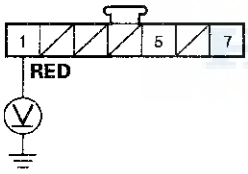

Wire side of female terminals

Is there battery voltage?

YES—Go to step 5.

NO—Repair open in the wire between the No. 16 (7.5 A) fuse in the driver's under-dash fuse/relay box and the recirculation control motor. ■

5. Turn the ignition switch to LOCK (0).

6. Test the recirculation control motor (see page 21-59).

   Is the recirculation control motor OK?

   YES—Go to step 7.

   NO—Replace the recirculation control motor (see page 21-61), or repair the recirculation control linkage or door. ■

7. Disconnect the HVAC control unit 24P connector.

8. Check for continuity between body ground and the HVAC control unit 24P connector No. 9 and No. 10 terminals individually.

HVAC CONTROL UNIT 24P CONNECTOR

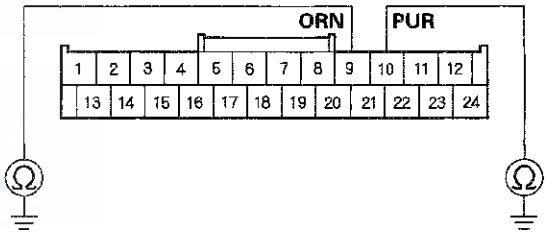

Wire side of female terminals

Is there continuity?

YES—Repair short to body ground in the wire(s) between the HVAC control unit and the recirculation control motor. ■

NO—Go to step 9.

9. Turn the ignition switch to ON (II), and check the same terminals for voltage between each terminal and body ground.

HVAC CONTROL UNIT 24P CONNECTOR

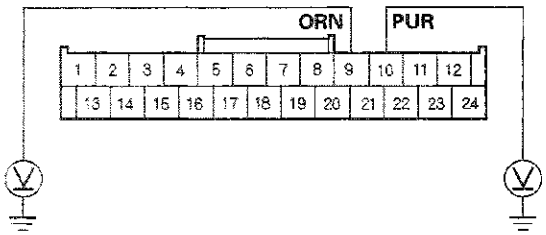

Wire side of female terminals

Is there any voltage?

YES—Repair short to power in the wire(s) between the HVAC control unit and the recirculation control motor. This short may also damage the HVAC control unit. Repair short to power before replacing the HVAC control unit. ■

NO—Go to step 10.

10. Turn the ignition switch to LOCK (0).

11. Check for continuity between the following terminals of the HVAC control unit 24P connector and the recirculation control motor 7P connector.

24P:	7P:
No. 9	No. 7
No. 10	No. 5

HVAC CONTROL UNIT 24P CONNECTOR
Wire side of female terminals

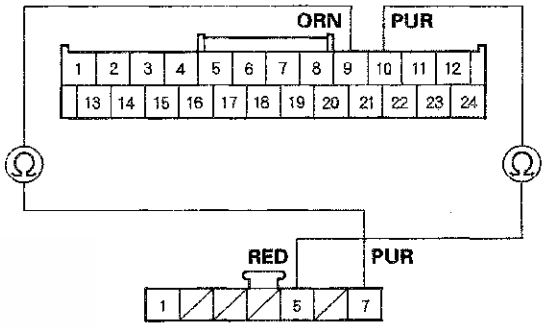

RECIRCULATION CONTROL MOTOR 7P CONNECTOR
Wire side of female terminals

Is there continuity?

YES—Check for loose wires or poor connections at the HVAC control unit 24P connector, and at the recirculation control motor 7P connector. If the connections are good, substitute a known-good HVAC control unit, and recheck. If the symptom/indication goes away, replace the original HVAC control unit. ■

NO—Repair open in the wire(s) between the HVAC control unit and the recirculation control motor. ■

HVAC Control Power and Ground Circuit Troubleshooting

1. Check the No. 16 (7.5 A) fuse in the driver's under-dash fuse/relay box.

   Is the fuse OK?

   YES—Go to step 2.

   NO—Replace the fuse, and recheck. If the fuse blows again, check for a short in the No. 16 (7.5 A) fuse circuit. ■

2. Disconnect the HVAC control unit 24P connector.

3. Turn the ignition switch to ON (II).

4. Measure the voltage between the HVAC control unit 24P connector No. 11 terminal and body ground.

HVAC CONTROL UNIT 24P CONNECTOR

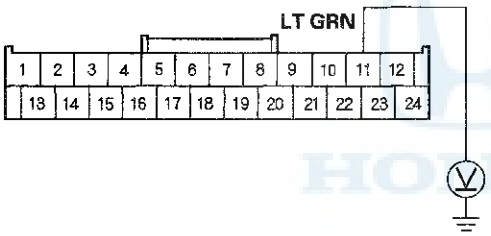

Wire side of female terminals

Is there battery voltage?

YES—Go to step 5.

NO—Repair open in the wire between the No. 16 (7.5 A) fuse in the driver's under-dash fuse/relay box and the HVAC control unit. ■

5. Turn the ignition switch to LOCK (0).

6. Check for continuity between the HVAC control unit 24P connector No. 23 terminal and body ground.

HVAC CONTROL UNIT 24P CONNECTOR

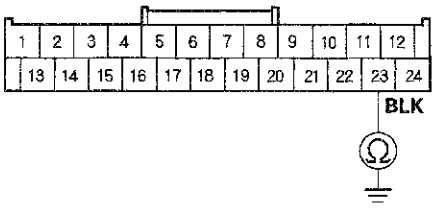

Wire side of female terminals

Is there continuity?

YES—Check for loose wires or poor connections at the HVAC control unit 24P connector. If the connections are good, substitute a known-good HVAC control unit, and recheck. ■

NO—Check for an open in the wire between the HVAC control unit and body ground. If the wire is OK, check for poor ground at G401 (see page 22-40). ■

A/C Condenser Fan Circuit Troubleshooting

NOTE:
- Do not use this troubleshooting procedure if the radiator fan and/or the A/C compressor is inoperative. Refer to the symptom troubleshooting index.
- Before doing symptom troubleshooting, check for powertrain DTCs (see page 11-3).

1. Check the No. 5 (20 A) and No. 21 (7.5 A) fuses in the under-hood fuse/relay box.

   Are the fuses OK?

   YES—Go to step 2.

   NO—Replace the fuse(s), and recheck. If the fuse(s) blow again, check for a short in the No. 5 (20 A) fuse and the No. 21 (7.5 A) fuse circuits.■

2. Test the A/C condenser fan relay (see page 22-92).

   Is the relay OK?

   YES—Go to step 3.

   NO—Replace the relay circuit board.■

3. Disconnect the A/C condenser fan 2P connector.

4. Disconnect under-hood fuse/relay box connector C (14P).

5. Check for continuity between the under-hood fuse/relay box connector C (5P) No. 3 terminal and the A/C condenser fan 2P connector No. 2 terminal.

UNDER-HOOD FUSE/RELAY BOX CONNECTOR C (5P)
Wire side of female terminals

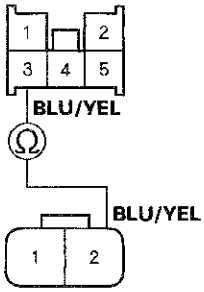

A/C CONDENSER FAN 2P CONNECTOR
Wire side of female terminals

Is there continuity?

YES—Go to step 6.

NO—Repair open in the wire between the under-hood fuse/relay box and the A/C condenser fan.■

6. Check for continuity between the A/C condenser fan 2P connector No. 1 terminal and body ground.

A/C CONDENSER FAN 2P CONNECTOR

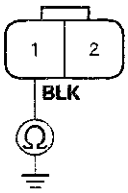

Wire side of female terminals

Is there continuity?

YES—Replace the A/C condenser fan motor.■

NO—Check for an open in the wire between the A/C condenser fan and body ground. If the wire is OK, check for poor ground at G302 (see page 22-30).■

Radiator and A/C Condenser Fan Common Circuit Troubleshooting

NOTE:
- Do not use this troubleshooting procedure if only one fan is inoperative, or if the A/C compressor is inoperative. Refer to the symptom troubleshooting index.
- Before doing symptom troubleshooting, check for powertrain DTCs (see page 11-3).

1. Check the No. 3—6 (MAIN FAN MTR) (30 A), No. 5 (20 A), and No. 21 (7.5 A) fuses in the under-hood fuse/relay box, and the No. 16 (7.5 A) fuse in the driver's under-dash fuse/relay box.

   Are the fuses OK?

   YES—Go to step 2.

   NO—Replace the fuse(s), and recheck. If any of the fuses blow again, check for a short in the No. 3-6 (30 A), No. 5 (20 A), or No. 21 (7.5 A) fuse circuits. ■

2. Turn the ignition switch to ON (II).

3. Measure the voltage between under-hood fuse/relay box connector B (14P) terminal No. 7 and body ground.

UNDER-HOOD FUSE/RELAY BOX CONNECTOR B (14P)

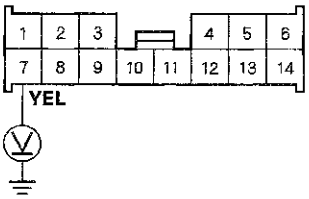

Wire side of female terminals

   Is there battery voltage?

   YES—Go to step 4.

   NO—Replace the under-hood fuse/relay box (see page 22-83). ■

4. Turn the ignition switch to LOCK (0).

5. Jump the SCS line with the HDS.

   NOTE: This step must be done to protect the engine control module (ECM)/powertrain control module (PCM) from damage.

6. Disconnect ECM/PCM connector A (49P).

7. Connect ECM/PCM connector A (49P) terminal No. 6 to body ground with a jumper wire.

ECM/PCM CONNECTOR A (49P)

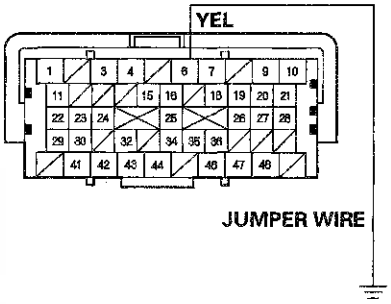

Terminal side of female terminals

8. Turn the ignition switch to ON (II).

   Do the A/C condenser and the radiator fans run?

   YES—Check for loose wires or poor connections at ECM/PCM connector A (49P) terminal No. 6 if the connections are good, substitute a known-good ECM/PCM, and recheck. If the symptom/indication goes away, replace the original ECM/PCM (see page 11-216). ■

   NO—Repair open in the wire between the under-hood fuse/relay box and the ECM/PCM. ■

A/C Compressor Clutch Circuit Troubleshooting

NOTE:
- It is normal for the A/C compressor to turn off under certain conditions, such as low idle, high engine coolant temperature, hard acceleration, or high/low refrigerant pressure.
- Do not use this troubleshooting procedure if the fans are also inoperative with the A/C on. Refer to the symptom troubleshooting index.
- Before doing any symptom troubleshooting, check for powertrain DTCs (see page 11-3). Also check for B-CAN codes (see page 22-120).

1. Check the No. 20 (7.5 A) fuse in the under-hood fuse/relay box, and the No. 16 (7.5 A) fuse in the driver's under-dash fuse/relay box.

   Are the fuses OK?

   YES—Go to step 2.

   NO—Replace the fuse(s) and recheck. If the fuse(s) blow again, check for a short in the No. 20 (7.5 A) fuse and the No. 16 (7.5 A) fuse circuits.■

2. Connect the HDS to the DLC.

3. Start the engine.

4. Turn on the A/C.

5. Check the A/C switch in the PGM-FI data list with the HDS.

   Is the A/C switch on?

   YES—Go to step 6.

   NO—Go to A/C pressure switch circuit troubleshooting (see page 21-52).■

6. Using the HDS, confirm the following values in the PGM-FI Data List at idle.

TP SENSOR	About 0.5 V	
RPM	A/T	750—850
	M/T	730—830
ECT SENSOR 2	176—212 °F (80—100 °C)	
A/C SWITCH	ON	
A/C CLUTCH	ON	

   Are all the values within specifications?

   YES—Go to step 7.

   NO—Troubleshoot the value that is not within the specifications.■

7. Remove the A/C compressor clutch relay from the under-hood fuse/relay box, and test it (see page 22-91).

   Is the relay OK?

   YES—Go to step 8.

   NO—Replace the A/C compressor clutch relay.■

(cont'd)

A/C Compressor Clutch Circuit Troubleshooting (cont'd)

8. Measure the voltage between A/C compressor clutch relay 4P socket terminal No. 1 and body ground.

A/C COMPRESSOR CLUTCH RELAY 4P SOCKET

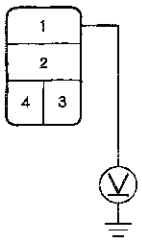

Terminal side of female terminals

Is there battery voltage?

YES—Go to step 9.

NO—Replace the under-hood fuse/relay box (see page 22-83). ■

9. Connect A/C compressor clutch relay 4P socket terminals No. 1 and No. 2 with a jumper wire.

A/C COMPRESSOR CLUTCH RELAY 4P SOCKET

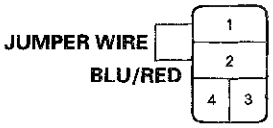

Terminal side of female terminals

Does the A/C compressor clutch click?

YES—Go to step 10.

NO—Go to step 19.

10. Disconnect the jumper wire.

11. Turn the ignition switch to ON (II).

12. Measure the voltage betwen A/C compressor clutch relay 4P socket terminal No. 4 and body ground.

A/C COMPRESSOR CLUTCH RELAY 4P SOCKET

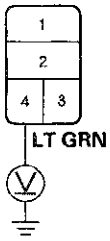

Terminal side of female terminals

Is there battery voltage?

YES—Go to step 13.

NO—Repair open in the wire between the No. 16 (7.5 A) fuse in the driver's under-dash fuse/relay box and the A/C compressor clutch relay. ■

13. Turn the ignition switch to LOCK (0).

14. Reinstall the A/C compressor clutch relay.

15. Jump the SCS line with the HDS.

    NOTE: This step must be done to protect the engine control module (ECM)/powertrain control module (PCM) from damage.

16. Disconnect ECM/PCM connector A (49P).

17. Connect ECM/PCM connector A (49P) terminal No. 15 to body ground with a jumper wire.

ECM/PCM CONNECTOR A (49P)

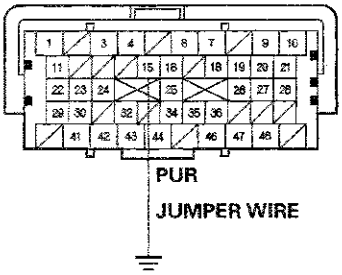

Terminal side of female terminals

18. Turn the ignition switch to ON (II).

Does the A/C compressor click?

YES—Check for loose wires or poor connections at ECM/PCM connector A (49P). If the connections are good, check the ECM/PCM grounds. If the grounds are good, substitute a known-good ECM/PCM, and recheck. If the symptom/indication goes away, replace the original ECM/PCM (see page 11-216).■

NO—Repair open in the wire between the A/C compressor clutch relay and the ECM/PCM.■

19. Disconnect the jumper wire.

20. Disconnect the A/C compressor clutch 1P connector.

21. Check for continuity between the A/C compressor clutch relay 4P socket No. 2 terminal and the A/C compressor clutch 1P connector No. 1 terminal.

A/C COMPRESSOR CLUTCH RELAY 4P SOCKET

Terminal side of female terminals

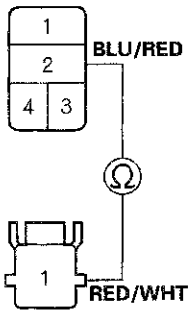

A/C COMPRESSOR CLUTCH 1P CONNECTOR

Wire side of female terminal

Is there continuity?

YES—Check the A/C compressor clutch clearance, and the compressor clutch field coil (see page 21-71). Repair as needed.■

NO—Repair open in the wire between the A/C compressor clutch relay and the A/C compressor clutch.■

A/C Pressure Switch Circuit Troubleshooting

NOTE:
- Do not use this troubleshooting procedure if any of the following items are operative: The condenser fan, the radiator fan, or the A/C compressor, or if the heater is inoperative. Refer to the symptom troubleshooting index.
- Check the A/C high-side pressure.
- Before doing any symptom troubleshooting, check for powertrain DTCs (see page 11-3). Also check for B-CAN codes (see page 22-120).

1. Turn the ignition switch to ON (II).
2. Check if the blower motor operates at all speeds.

   Does the blower motor operate at all speeds?

   YES—Go to step 3.

   NO—Repair the problem in the blower motor circuit (see page 21-37). ■
3. Turn the ignition switch to LOCK (0).
4. Disconnect the HVAC control unit 24P connector.
5. Turn the ignition switch to ON (II).
6. Measure the voltage between the HVAC control unit 24P connector No. 21 terminal and body ground.

HVAC CONTROL UNIT 24P CONNECTOR

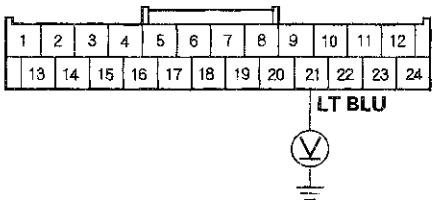

Wire side of female terminals

Is there battery voltage?

YES—Go to step 14.

NO—Go to step 7.

7. Turn the ignition switch to LOCK (0).
8. Disconnect the A/C pressure switch 2P connector.
9. Turn the ignition switch to ON (II).
10. Measure the voltage between the A/C pressure switch 2P connector No. 2 terminal and body ground.

A/C PRESSURE SWITCH 2P CONNECTOR

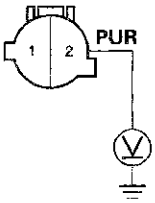

Wire side of female terminals

Is there battery voltage?

YES—Go to step 11.

NO—Repair open in the wire between the A/C pressure switch and the MICU. If the wire is OK, substitute a known-good MICU and recheck. If the symptom goes away, replace the original MICU. ■

11. Check for continuity between the No. 1 and No. 2 terminals of the A/C pressure switch.

A/C PRESSURE SWITCH

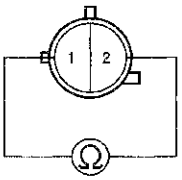

Is there continuity?

YES—Go to step 12.

NO—Replace the A/C pressure switch. ■

12. Connect the A/C pressure switch 2P connector No. 2 terminal to body ground with a jumper wire.

A/C PRESSURE SWITCH 2P CONNECTOR

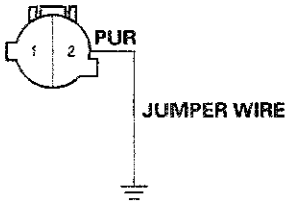

Wire side of female terminals

Do the compressor and fans operate?

YES—Go to step 13.

NO—Check for B-CAN codes (see page 22-120). ■

13. Check for continuity between the HVAC control unit 24P connector No. 21 terminal and the A/C pressure switch 2P connector No. 1 terminal.

HVAC CONTROL UNIT 24P CONNECTOR
Wire side of female terminals

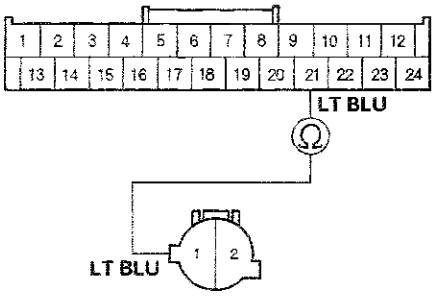

A/C PRESSURE SWITCH 2P CONNECTOR
Wire side of female terminals

Is there continuity?

YES—Check for loose wires or poor connections at the HVAC control unit 24P connector and at the A/C pressure switch 2P connector. ■

NO—Repair open in the wire between the HVAC control unit and A/C pressure switch. ■

14. Turn the ignition switch to LOCK (0).

15. Measure the evaporator temperature sensor resistance between the HVAC control unit 24P connector No. 14 and No. 15 terminals.

HVAC CONTROL UNIT 24P CONNECTOR

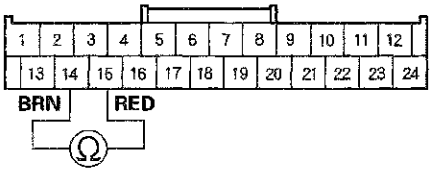

Wire side of female terminals

Is resistance less than 24 kΩ ?

YES—Check for loose wires or poor connections at the HVAC control unit 24P connector. If the connections are good, substitute a known-good HVAC control unit and recheck. If the symptom goes away, replace the original HVAC control unit. ■

NO—Test the evaporator temperature sensor (see page 21-54). ■

Evaporator Temperature Sensor Test

1. Remove the evaporator temperature sensor (see page 21-64).

2. Dip the sensor in ice water, and measure the resistance between its terminals.

EVAPORATOR TEMPERATURE SENSOR

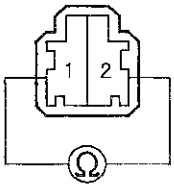

Terminal side of male terminals

3. Then pour warm water on the sensor, and check for a change in the resistance.

4. Compare the resistance readings with the specifications shown in the graph; the resistance should be within the specifications.

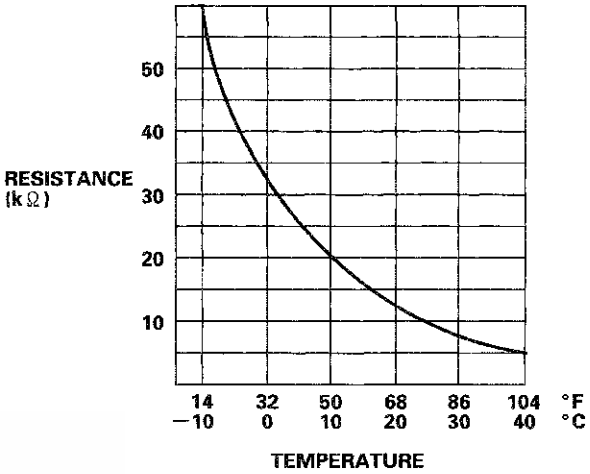

5. If the resistance is not as specified, replace the evaporator temperature sensor (see page 21-64).

Power Transistor Test

1. Remove the passenger's dashboard center lower cover (see page 20-157).

2. Disconnect the 4P connector from the power transistor.

3. Measure the resistance between terminals No. 3 and No. 4 of the power transistor. It should be about 1.5 kΩ.

   - If the resistance is within the specifications, go to step 4.
   - If the resistance is not within the specifications, replace the power transistor.

   NOTE: Also check the blower motor. Power transistor failure can be caused by a defective blower motor.

POWER TRANSISTOR

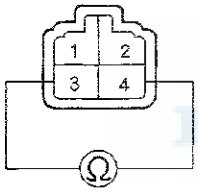

4. Carefully release the lock tab on the No. 1 terminal (PUR) (A) in the 4P connector, then remove the terminal and insulate it from body ground.

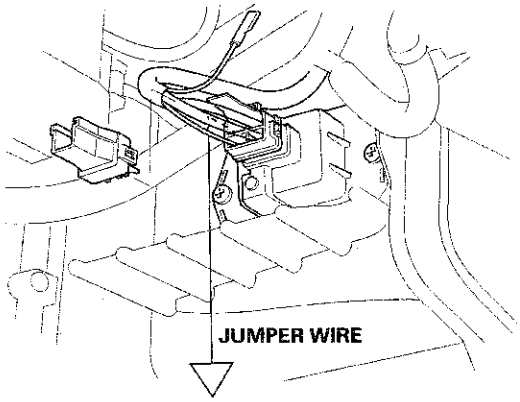

(To 12 V Power source on vehicle)

5. Reconnect the 4P connector to the power transistor.

6. Make sure the PUR wire is completely isolated, then supply 12 V to the No. 1 cavity with a jumper wire.

7. Turn the ignition switch to ON (II), and check that the blower motor runs.

   - If the blower motor does not run, replace the power transistor.

     NOTE: A faulty blower motor can cause the power transistor to fail. If the power transistor is replaced, also check the blower motor for binding, and replace it if necessary.

   - If the blower motor runs, the power transistor is OK.

Air Mix Control Motor Test

NOTE: Before testing, check for HVAC DTCs (see page 21-10).

1. Disconnect the 7P connector from the air mix control motor.

   NOTICE
   Incorrectly applying power and ground to the air mix control motor will damage it. Follow the instructions carefully.

2. Connect battery power to the No. 1 terminal of the air mix control motor, and ground the No. 2 terminal; the air mix control motor should run, and stop at Max Hot. If it doesn't, reverse the connections; the air mix control motor should run, and stop at Max Cool. When the air mix control motor stops running, disconnect battery power immediately.

AIR MIX CONTROL MOTOR

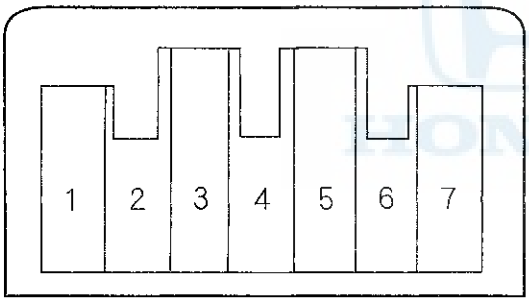

3. If the air mix control motor did not run in step 2, remove it, then check the air mix control linkage and door for smooth movement.
   - If the linkage and door move smoothly, replace the air mix control motor (see page 21-57).
   - If the linkage or door sticks or binds, repair them as needed.
   - If the air mix control motor runs smoothly, go to step 4.

4. Measure the resistance between the No. 5 and No. 7 terminals. It should be between 4.2 to 7.8 kΩ.

5. Reconnect the air mix control motor 7P connector, then turn the ignition switch to ON (II).

6. Using the backprobe set, measure the voltage between the No. 3 and No. 7 terminals of the 7P connector.

   Max Cool: About 0.5 V
   Max Hot: About 4.5 V

7. If either the resistance or the voltage readings are not as specified, replace the air mix control motor (see page 21-57).

Air Mix Control Motor Replacement

1. Remove the driver's dashboard center lower cover (see page 20-157).

2. Disconnect the 7P connector (A) from the air mix control motor (B). Remove the self-tapping screws and the air mix control motor from the heater unit.

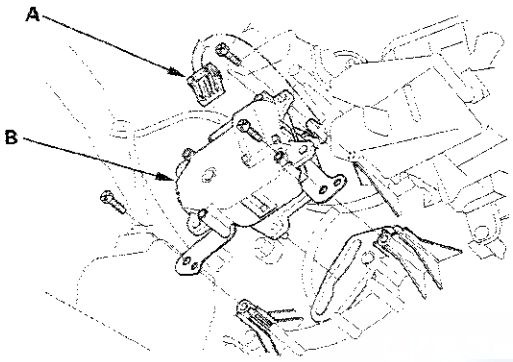

3. Install the motor in the reverse order of removal. Make sure the pin on the motor is properly engaged with the linkage. After installation, make sure the motor runs smoothly.

Mode Control Motor Test

4-door with A/T

NOTE: Before testing, check for HVAC DTCs (see page 21-10).

1. Disconnect the 7P connector from the mode control motor.

   NOTICE
   Incorrectly applying power and ground to the mode control motor will damage it. Follow the instructions carefully.

2. Connect battery power to terminal No. 1 of the mode control motor, and ground terminal No. 2. The mode control motor should run smoothly, and stop at Defrost. If it doesn't, reverse the connections; the mode control motor should run smoothly, and stop at Vent. When the mode control motor stops running, disconnect the battery power immediately.

MODE CONTROL MOTOR

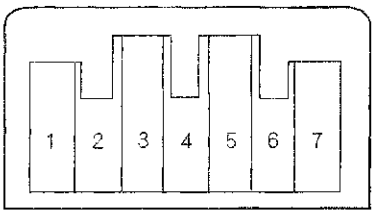

3. If the mode control motor did not run in step 2, remove it, then check the mode control linkage and doors for smooth movement.

   - If the linkage and doors move smoothly, replace the mode control motor (see page 21-59).
   - If the linkage or doors stick or bind, repair them as needed.
   - If the mode control motor runs smoothly, go to step 4.

4. Use a digital multimeter with an output of 1 mA or less at the 20 kΩ range. With the mode control motor running as in step 2, check for continuity between terminal No. 7 and terminals No. 3, 4, 5, and 6 individually. There should be continuity for a moment at each terminal as the motor moves through its travel.

5. If there is no continuity for a moment at each terminal, replace the mode control motor (see page 21-59).

Mode Control Motor Test (cont'd)

4-door with M/T, 2-door

NOTE: Before testing, check for HVAC DTCs (see page 21-10).

1. Disconnect the 7P connector from the mode control motor.

   NOTICE
   Incorrectly applying power and ground to the mode control motor will damage it. Follow the instructions carefully.

2. Connect battery power to the No. 1 terminal of the mode control motor, and ground the No. 2 terminal; the mode control motor should run, and stop at Defrost. If it doesn't, reverse the connections; the mode control motor should run, and stop at Vent. When the mode control motor stops running, disconnect battery power immediately.

MODE CONTROL MOTOR

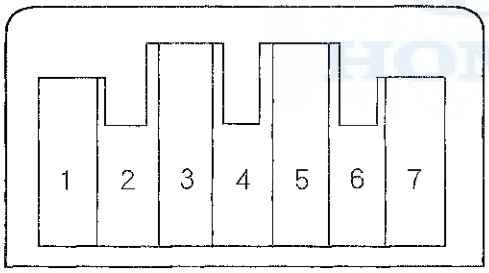

3. If the mode control motor did not run in step 2, remove it, then check the mode control linkage and door for smooth movement.
   - If the linkage and door move smoothly, replace the mode control motor (see page 21-59).
   - If the linkage or door sticks or binds, repair them as needed.
   - If the mode control motor runs smoothly, go to step 4.

4. Measure the resistance between the No. 5 and No. 7 terminals of the mode control motor. It should be between 4.2 and 7.8 kΩ.

5. Reconnect the mode control motor 7P connector, then turn the ignition switch to ON (II).

6. Using the backprobe set, measure the voltage between the No. 3 and No. 7 terminals of the 7P connector.

   Vent: **About 0.5 V**
   Defrost: **About 4.5 V**

7. If either the resistance or the voltage readings are not as specified, replace the mode control motor (see page 21-59).

Mode Control Motor Replacement

1. Remove the blower unit (see page 21-62).

2. Disconnect the 7P connector (A) from the mode control motor (B). Remove the self-tapping screws and the mode control motor from the heater unit.

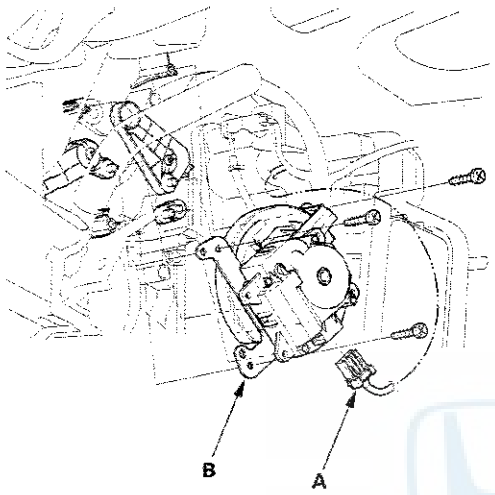

3. Install the motor in the reverse order of removal. Make sure the pin on the motor is properly engaged with the linkage. After installation, make sure the motor runs smoothly.

Recirculation Control Motor Test

4-door with A/T

NOTE: Before testing, check for HVAC DTCs (see page 21-10).

1. Disconnect the 7P connector from the recirculation control motor.

   NOTICE
   Incorrectly applying power and ground to the recirculation control motor will damage it. Follow the instructions carefully.

2. Connect battery power to terminal No. 1 of the recirculation control motor, and ground either terminal No. 5 or terminal No. 7. The motor should run smoothly to the Fresh position (terminal No. 5 connected to ground), or the Recirculate position (terminal No. 7 connected to ground). Disconnect battery power immediately when the motor stops running.

   NOTE: Do not reverse the power and ground connections, or leave the recirculation control motor connected to power and ground after it has stopped running. These actions will damage the motor.

RECIRCULATION CONTROL MOTOR

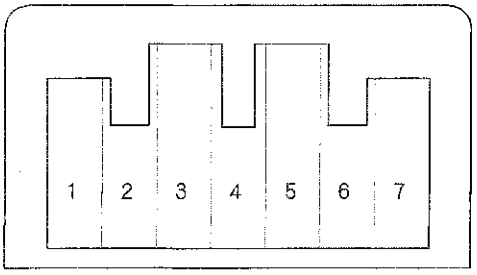

3. If the recirculation control motor did not run in step 2, remove it, then check the recirculation control linkage and doors for smooth movement.

   - If the linkage and doors move smoothly, replace the recirculation control motor (see page 21-61).
   - If the linkage or doors stick or bind, repair them as needed.

Recirculation Control Motor Test (cont'd)

4-door with M/T, 2-door

NOTE: Before testing, check for HVAC DTCs (see page 21-10).

1. Disconnect the 7P connector from the recirculation control motor.

   NOTICE
   Incorrectly applying power and ground to the recirculation control motor will damage it. Follow the instructions carefully.

2. Connect battery power to the No. 1 terminal of the recirculation control motor, and ground the No. 2 terminal; the recirculation control motor should run, and stop at Fresh. If it doesn't, reverse the connections; the recirculation control motor should run, and stop at Recirculate. When the recirculation control motor stops running, disconnect battery power immediately.

RECIRCULATION CONTROL MOTOR

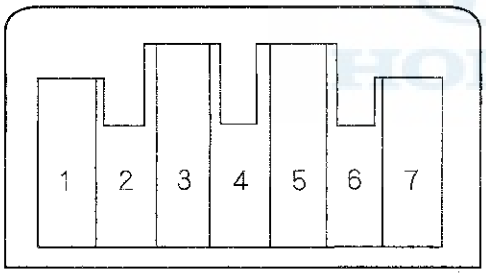

3. If the recirculation control motor did not run in step 2, remove it, then check the recirculation control linkage and door for smooth movement.
   - If the linkage and door move smoothly, replace the recirculation control motor (see page 21-61).
   - If the linkage or door sticks or binds, repair them as needed.
   - If the recirculation control motor runs smoothly, go to step 4.

4. Measure the resistance between the No. 5 and No. 7 terminals of the recirculation control motor. It should be between 4.2 and 7.8 kΩ.

5. Reconnect the recirculation control motor 7P connector, then turn the ignition switch to ON (II).

6. Using the backprobe set, measure the voltage between the No. 3 and No. 7 terminals of the 7P connector.

   Fresh: About 1.0 V
   Recirculate: About 4.0 V

7. If either the resistance or the voltage readings are not as specified, replace the recirculation control motor (see page 21-61).

Recirculation Control Motor Replacement

1. Remove the glove box (see page 20-161).

2. Disconnect the 7P connector (A) from the recirculation control motor (B). Remove the self-tapping screws and the recirculation control motor from the heater unit.

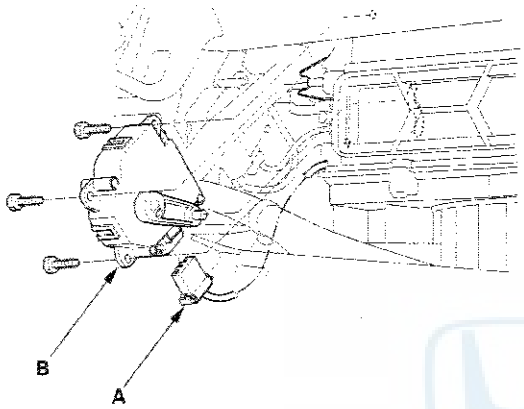

3. Install the motor in the reverse order of removal. Make sure the pin on the motor is properly engaged with the linkage. After installation, make sure the motor runs smoothly.

HVAC Control Unit Removal/ Installation

1. Remove the audio unit (see page 23-111).

2. Remove the self-tapping screws. If necessary, replace the bulbs (A).

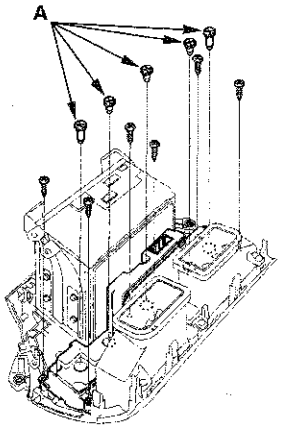

3. While holding the HVAC control unit (A), firmly press the center of one of the dials (B) to remove the outer dial. Repeat for the other outer dial, then remove the unit.

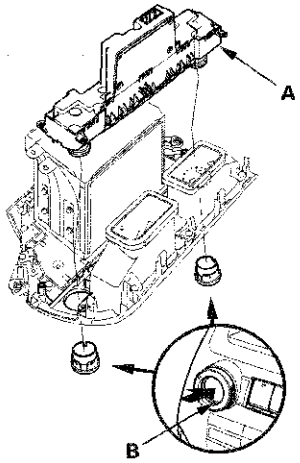

4. Install the control unit in the reverse order of removal. After installation, operate the various functions to make sure they work properly.

5. Run the self-diagnostic function to confirm that there are no problems in the system (see page 21-11).

Blower Unit Removal/Installation

1. Remove the glove box (see page 20-161).
2. Remove the passenger's dashboard center lower cover (see page 20-157).
3. Remove the right kick panel (see page 20-99).
4. Remove the dust and pollen filter assembly from the blower unit.
5. Remove the bolts (A) and the wire harness clip (B). Then cut the plastic cross brace (C) in the glove box opening with diagonal cutters in the area shown.

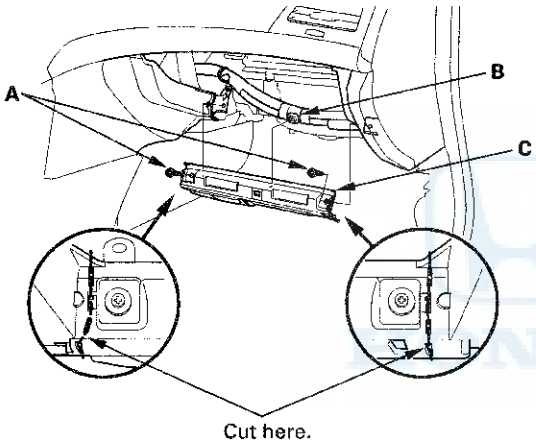

6. Disconnect these connectors (A): Passenger's under-dash fuse/relay box connector D (28P), the stereo amplifier connectors (with premium audio system), the AM/FM antenna lead, and right side wire harness connector C410 (20P). Remove the wire harness clips (B).

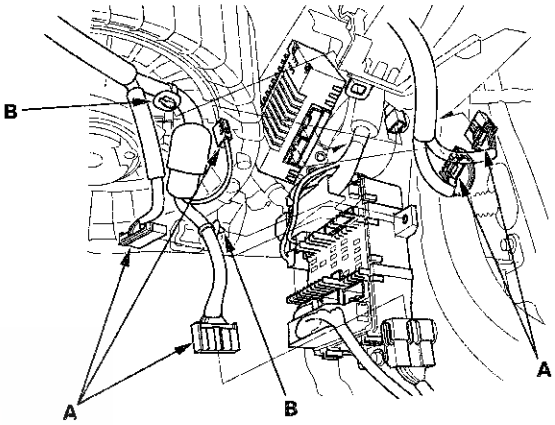

7. Remove the two screws, then remove the cover (A).

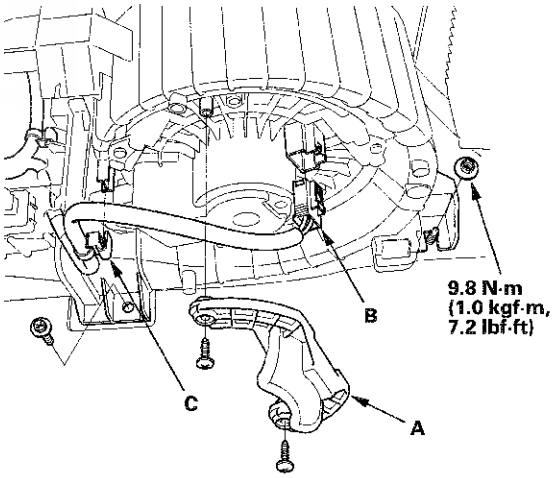

8. Disconnect the connector (B) from the blower motor and the wire harness clip (C). Remove the self-tapping screw and the mounting nut.

9. Remove the self-tapping screws, and the passenger's heater duct (A).

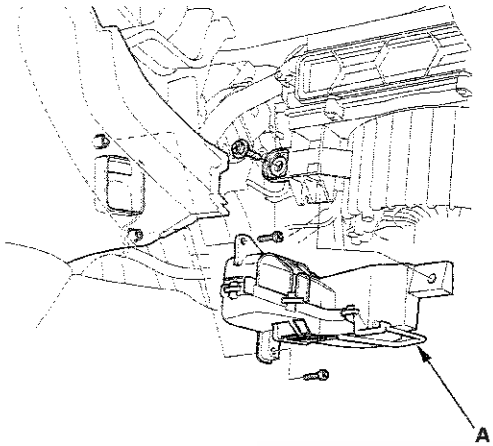

10. Disconnect the connector (A) from the recirculation control motor. Remove the mounting nuts.

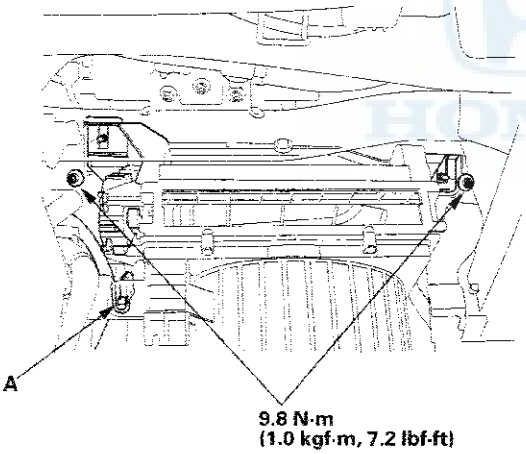

11. Pull the blower unit (A) out while rotating it clockwise as shown, so that the glove box bracket (B) passes through the dust and pollen filter area.

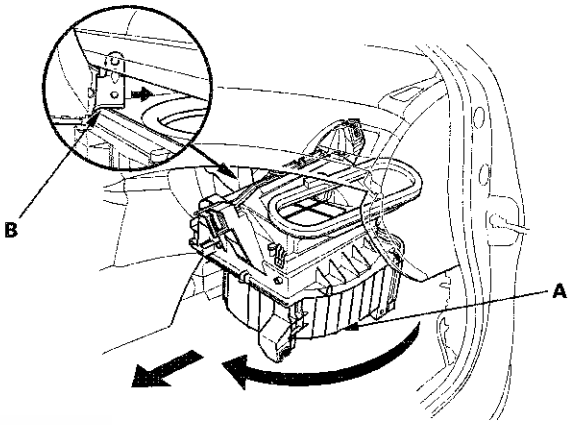

12. Install the unit in the reverse order of removal. Make sure that there is no air leakage.

Blower Unit Component Replacement

Note these items when overhauling the blower unit:
- The recirculation control motor (A), the blower motor (B), and the dust and pollen filter (C) can be replaced without removing the blower unit.
- Before reassembly, make sure that the recirculation control linkage and door move smoothly without binding.
- After reassembly, make sure the recirculation control motor runs smoothly (see page 21-61).

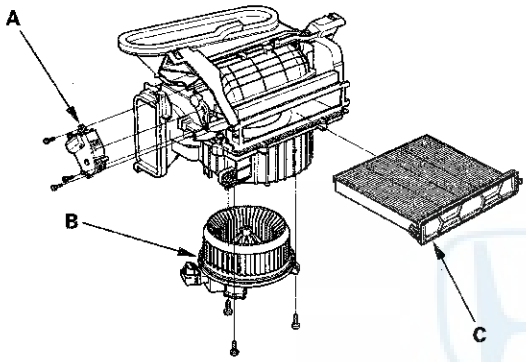

Evaporator Core Replacement

1. Recover the refrigerant with a recovery/recycling/charging station (see page 21-78).

2. Remove the bolt from the A/C line clamp (A).

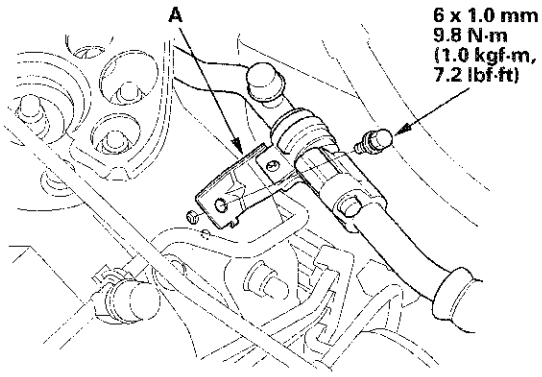

3. Remove the bolt, then disconnect the A/C line (A) from the evaporator core.

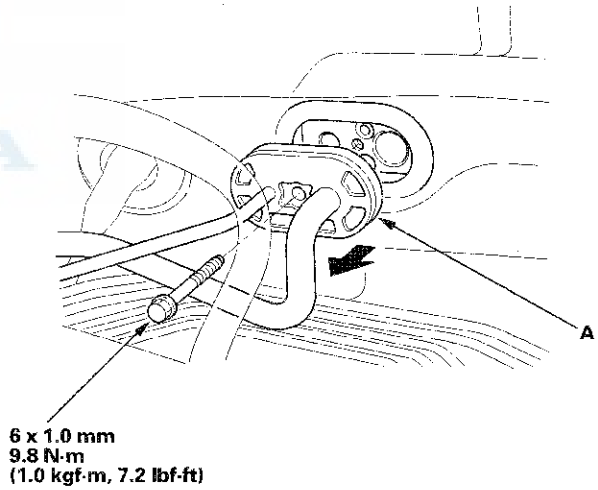

4. Remove the blower unit (see page 21-62).

5. Remove the passenger's console cover (see page 20-146).

6. Disconnect these connectors (A): The evaporator temperature sensor, the power transistor, and the passenger's air mix control motor (with climate control). Remove the connector clip (B) and the harness clip (C). Remove the self-tapping screws, the expansion valve cover (D), and the seal (E).

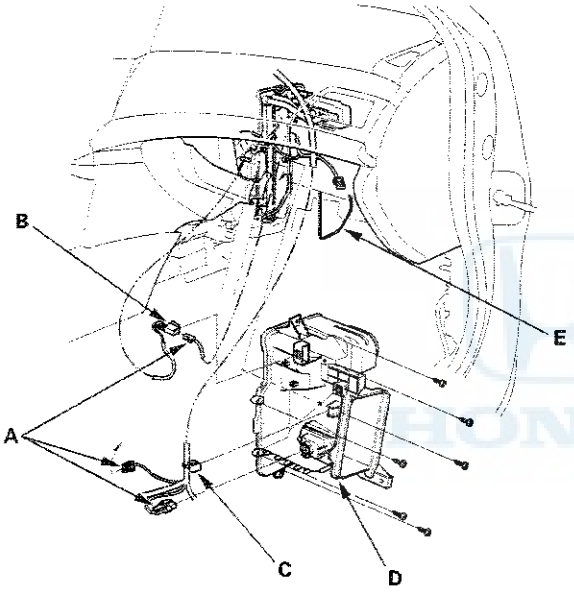

7. Carefully pull out the evaporator core (A) without bending the lines.

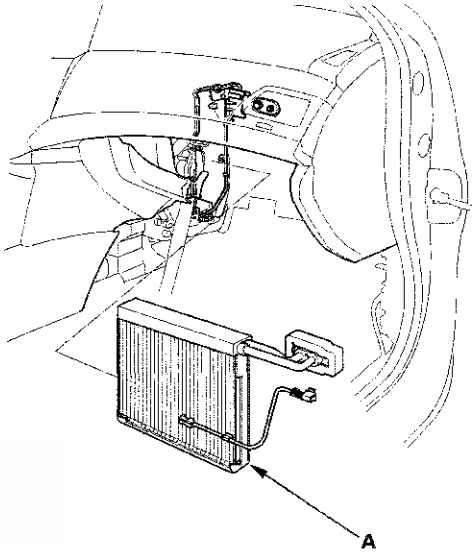

8. Remove the clips (A) and the evaporator temperature sensor (B).

NOTE: At the factory, the evaporator temperature sensor is installed at the 13th row of fins from the right side.

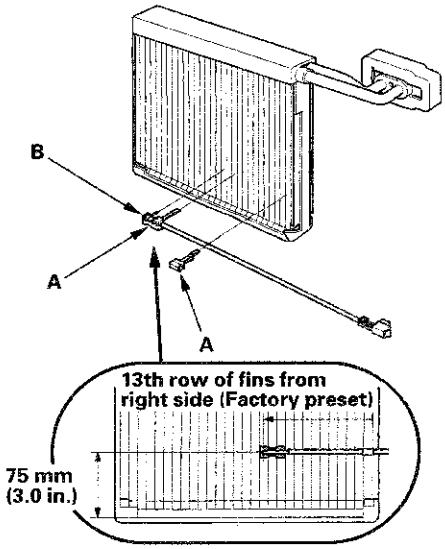

(cont'd)

Evaporator Core Replacement (cont'd)

9. When the evaporator temperature sensor (A) is reinstalled onto a new evaporator core, set the evaporator temperature sensor in the 13th fin from the right side.

   NOTE: If you are installing the sensor onto the old evaporator core, install the sensor onto the 14th fin, because the 13th fin may be deformed from the previous installation.

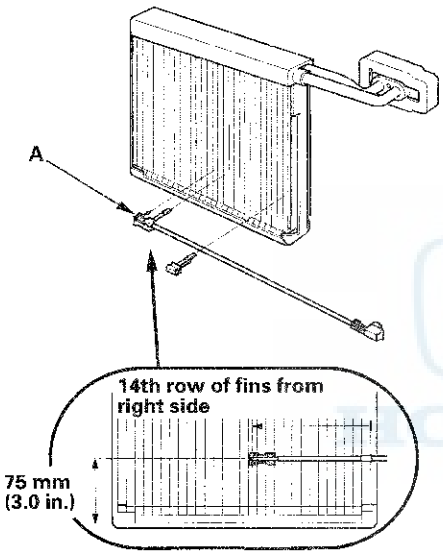

10. Install the core in the reverse order of removal, and note these items:

    - If you're installing a new evaporator core, add refrigerant oil (DENSO ND-OIL 8) (see page 21-6).
    - Replace the O-rings with new ones at each fitting, and apply a thin coat of refrigerant oil before installing them. Be sure to use the correct O-rings for HFC-134a (R-134a) to avoid leakage.
    - Immediately after using the oil, reinstall the cap on the container, and seal it to avoid moisture absorption.
    - Do not spill the refrigerant oil on the vehicle; it may damage the paint; if the refrigerant oil contacts the paint, wash it off immediately.
    - Make sure that there is no air leakage.
    - Charge the system (see page 21-80).

Expansion Valve Replacement

1. Remove the evaporator core (see page 21-64).

2. Remove the insulator (A) and bolts, then remove the expansion valve (B) and O-rings (C).

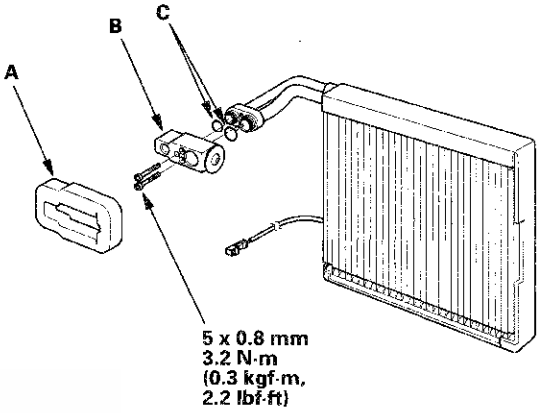

3. Install the expansion valve in the reverse order of removal, and note these items:

   - Replace the O-rings with new ones at each fitting, and apply a thin coat of refrigerant oil before installing them. Be sure to use the correct O-rings for HFC-134a (R-134a) to avoid leakage.
   - Immediately after using the oil, reinstall the cap on the container, and seal it to avoid moisture absorption.
   - Do not spill the refrigerant oil on the vehicle; it may damage the paint; if the refrigerant oil contacts the paint, wash it off immediately.
   - Make sure that there is no air leakage.
   - Charge the system (see page 21-80).

Heater Unit/Core Replacement

SRS components are located in this area. Review the SRS component locations (see page 24-19) and the precautions and procedures (see page 24-23) before doing repairs or service.

1. Do the battery terminal disconnection procedure (see page 22-89).

2. Disconnect the A/C line from the evaporator core (see page 21-64).

3. When the engine is cool, drain the engine coolant from the radiator (see page 10-6).

4. From under the hood, remove the clamp (A). Slide the hose clamps (B) back. Disconnect the inlet heater hose (C) and the outlet heater hose (D) from the heater unit. Note the orientation of the hoses. Engine coolant will run out when the hoses are disconnected; drain it into a clean drip pan. Be sure not to let coolant spill on the electrical parts or the painted surfaces. If any coolant spills, rinse it off immediately.

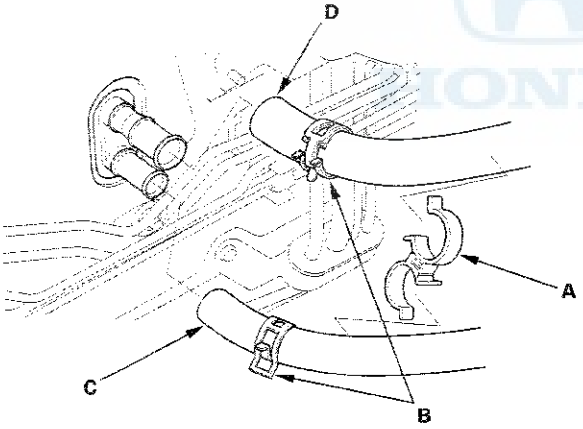

5. Remove the mounting nut from the heater unit. Take care not to damage or bend the fuel lines or brake lines, etc..

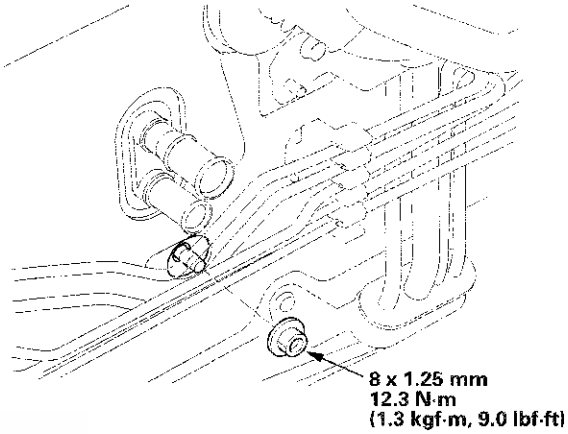

6. Remove the dashboard (see page 20-169).

7. Disconnect the connector (A). Remove the clips (B), ducts (C), and the drain hose (D). Then remove the mounting bolt, the mounting nuts, and the blower-heater unit (E).

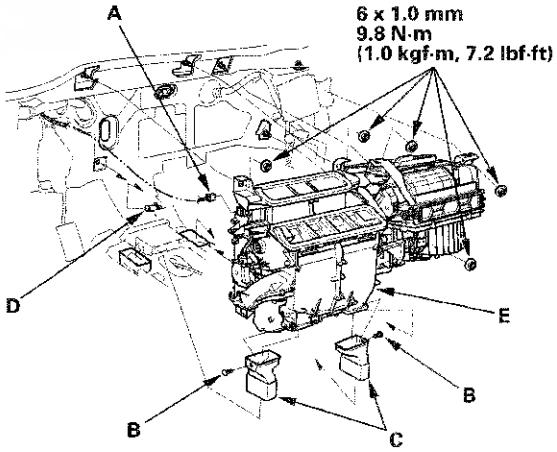

(cont'd)

Heater Unit/Core Replacement (cont'd)

8. Remove the two screws, then remove the cover (A).

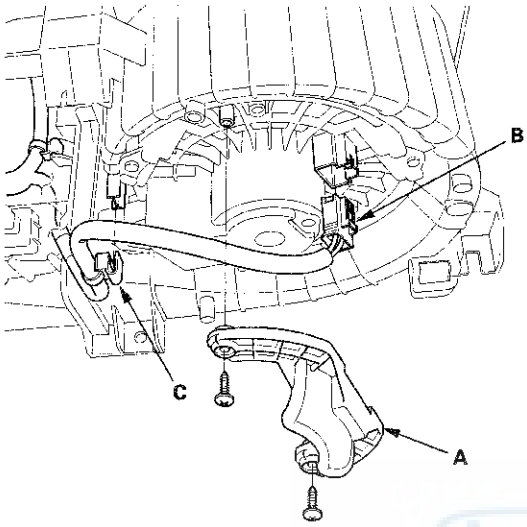

9. Disconnect the connector (B) from the blower motor. Remove the wire harness clip (C).

10. Disconnect these connectors (A): The mode control motor, the power transistor, the evaporator temperature sensor, the passenger's air mix control motor (with climate control), and the recirculation control motor. Remove the wire harness clips (B).

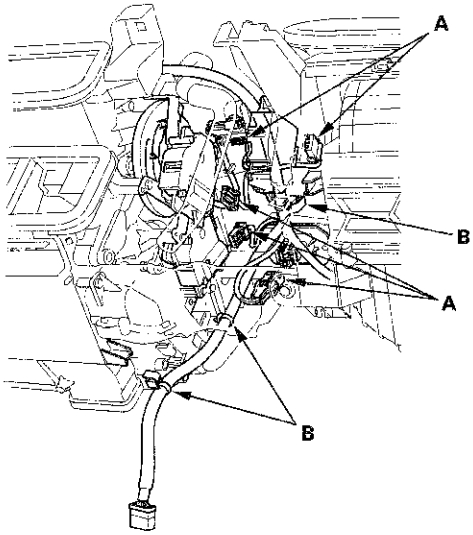

11. Disconnect the connector (A) from the air mix control motor. Remove the wire harness clips (B), the connector clip (C), and the wire harness (D).

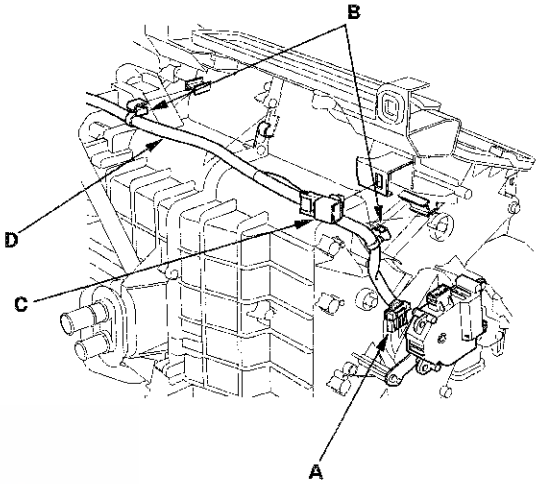

12. Remove the self-tapping screws and the passenger's heater duct (A). Remove the self-tapping screws and the expansion valve cover (B). Remove the self-tapping screw and the heater core cover (C). Remove the self-tapping screws, the heater pipe bracket (D), and the grommet (E), and carefully pull out the heater core (F).

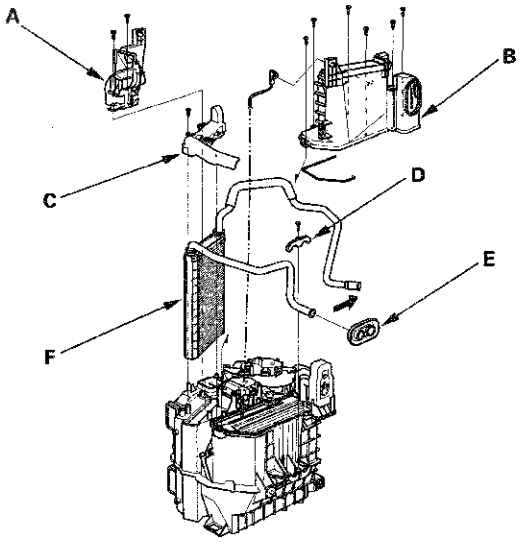

13. Install the heater core and the evaporator core in the reverse order of removal.

14. Install the heater unit in the reverse order of removal, and note these items:

    - Do not interchange the inlet and outlet heater hoses, and install the hose clamps securely.
    - Refill the cooling system with engine coolant (see page 10-6).
    - Make sure that there is no coolant leakage.
    - Make sure that there is no air leakage.

15. Do the battery terminal reconnection procedure (see page 22-89).

A/C Compressor Replacement

NOTE: Do not install the A/C compressor into a system unless you are completely sure that the system is free of contamination. Installing the A/C compressor into a contaminated system can result in premature A/C compressor failure.

1. If the A/C compressor is marginally operable, run the engine at idle speed, and let the air conditioning work for a few minutes, then shut the engine off.

2. Recover the refrigerant with a recovery/recycling/charging station (see page 21-78).

3. Remove the drive belt (see page 4-30).

4. Remove the condenser fan shroud (see page 10-13).

5. Disconnect the A/C compressor clutch connector (A). Remove the bolts and the nut, then disconnect the suction hose (B) and the discharge hose (C) from the A/C compressor. Plug or cap the lines immediately after disconnecting them to avoid moisture and dust contamination.

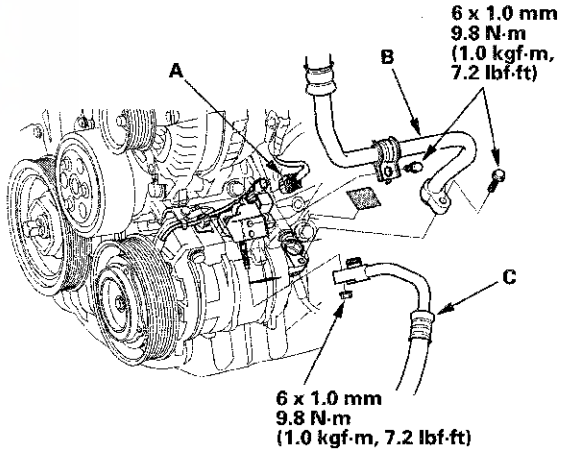

(cont'd)

A/C Compressor Replacement (cont'd)

6. Remove the mounting bolts and the A/C compressor (A). Be careful not to damage the radiator fins when removing the compressor.

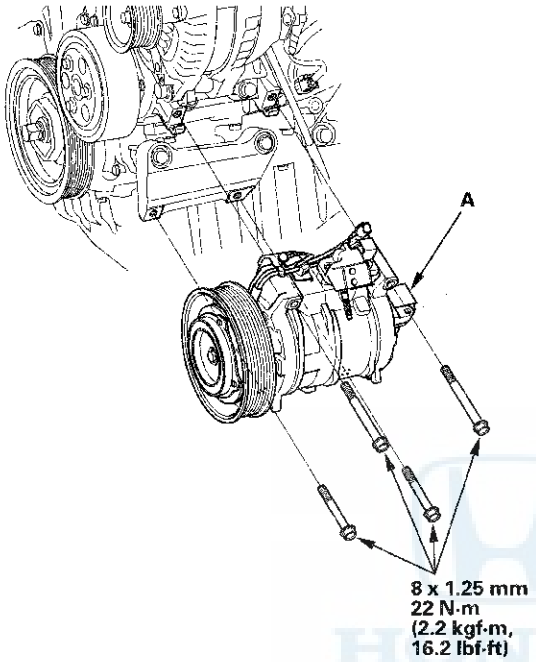

7. Install the A/C compressor in the reverse order of removal, and note these items:

   - Inspect the A/C lines for any signs of contamination.
   - If you're installing a new A/C compressor, you must calculate the amount of refrigerant oil to be removed from it (see page 21-6). A new A/C compressor comes with a full charge of oil.
   - Replace the O-rings with new ones at each fitting, and apply a thin coat of refrigerant oil before installing them. Be sure to use the correct O-rings for HFC-134a (R-134a) to avoid leakage.
   - Use only PAG refrigerant oil (DENSO ND-OIL 8) for HFC-134a A/C systems.
   - To avoid contamination, do not return the oil to the container once dispensed, and never mix it with other refrigerant oils.
   - Immediately after using the oil, reinstall the cap on the container, and seal it to avoid moisture absorption.
   - Do not spill the refrigerant oil on the vehicle; it may damage the paint; if the refrigerant oil contacts the paint, wash it off immediately.
   - Be careful not to damage the radiator fins when installing the compressor and the A/C condenser fan shroud.
   - Charge the system (see page 21-80).

A/C Compressor Clutch Check

1. Check the pressure plate for discoloration, peeling, or other damage. If there is damage, replace the clutch set (see page 21-72).

2. Check the pulley bearing play and drag by rotating the pulley by hand. Also check for grease leakage from the bearing. Replace the clutch set with a new one if it is noisy, has excessive play/drag, or has bearing grease contamination on the clutch faces (see page 21-72).

   NOTE: The pulley and the pressure plate were mated at the factory by a burnishing operation. Always replace the pulley and the pressure plate as a set. Replacing only one part of the clutch set will cause clutch slippage.

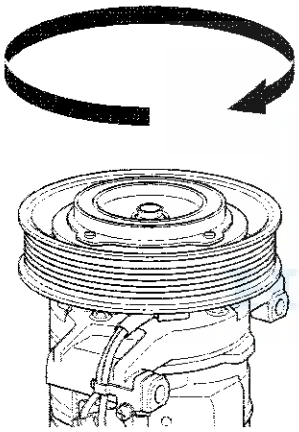

3. Measure the clearance between the pulley (A) and the pressure plate (B) with a dial indicator. Zero out the indicator, then apply battery voltage to the A/C compressor clutch. Measure the movement of the pressure plate when the voltage is applied. If the clearance is not within the specified limits, the pressure plate must be reshimmed (see page 21-72).

   Clearance: 0.35—0.60 mm (0.014—0.024 in.)

   NOTE: The shims are available in three thicknesses: 0.1 mm, 0.3 mm, and 0.5 mm.

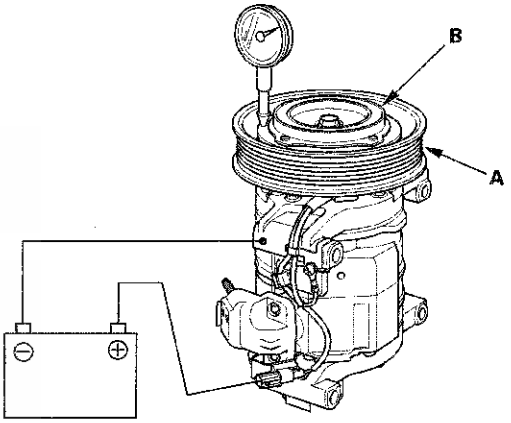

4. Remove the pressure plate (see page 21-72), and inspect the pressure plate and pulley friction surfaces for wear. If there is excessive wear, roughness, or scoring, replace the clutch set.

5. Inspect the friction surfaces and the A/C compressor shaft hub for excess oil. If excess oil is present, and it is not from the engine or power steering system, then the A/C compressor shaft seal is leaking. Replace the A/C compressor (see page 21-69).

(cont'd)

A/C Compressor Clutch Check (cont'd)

6. Check resistance of the field coil. If resistance is not within specifications, replace the field coil (see page 21-72).

Field Coil Resistance: 3.9—4.3 Ω at 68° F (20 °C)

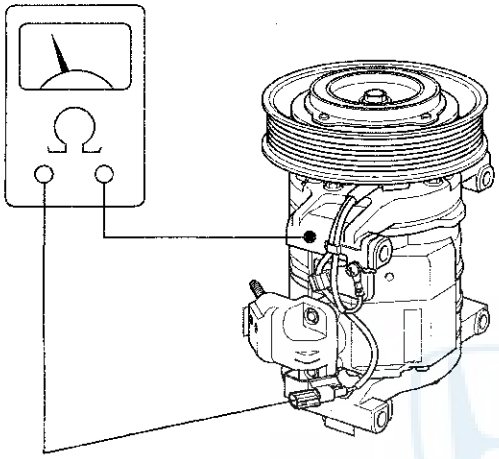

A/C Compressor Clutch Overhaul

Special Tools Required
A/C clutch holder: Robinair 10290, Kent-Moore J37872, Honda Tool and Equipment ACT-499A, or a commercially available equivalent.

1. Remove the center bolt while holding the pressure plate (A) with a commercially available A/C clutch holder (B).

NOTE:
- Do not use a hammer to remove the snap rings. Using a hammer damages the A/C compressor.
- Do not hammer or pry on the pulley to remove it. If the pulley is difficult to remove, use a commercially available pulley removing tool. Make sure the jaws of the pulling tool engage the back face of the pulley, not the pulley grooves.

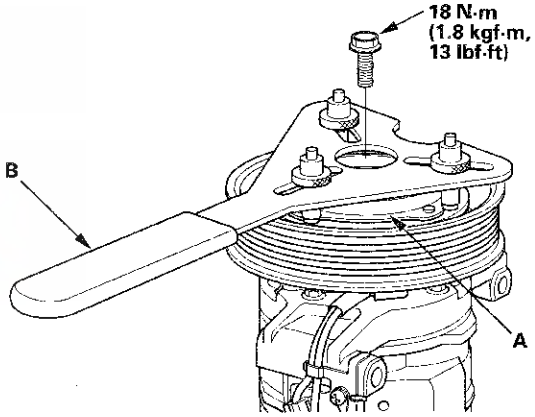

2. Remove the pressure plate (A) and the shim(s) (B), taking care not to lose the shim(s). If the clutch needs adjustment, increase or decrease the number and thickness of shims as necessary, then reinstall the pressure plate, and recheck its clearance (see page 21-71).

   NOTE:
   - The shims are available in three thicknesses: 0.1 mm, 0.3 mm, and 0.5 mm.
   - Do not pry the on the pressure plate with screwdrivers or similar tools. Prying damages the pressure plate and the pulley.
   - When replacing the clutch set, place a trial stack of shims, 1 mm total thickness, on the A/C compressor shaft. Install the pressure plate, and check its clearance (see page 21-71). If the clearance is not with specification, add or substract shims as needed.

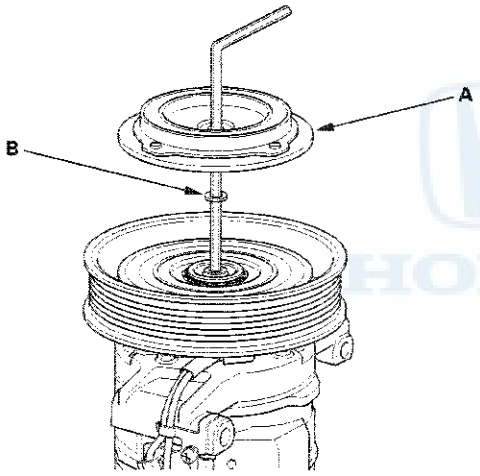

3. If you are replacing the field coil, remove the snap ring (A) with snap ring pliers, then remove the pulley (B). Be careful not to damage the pulley or the A/C compressor.

   NOTE:
   - Do not use a hammer to remove the snap rings. Using a hammer damages the A/C compressor.
   - Do not hammer or pry on the pulley to remove it. If the pulley is difficult to remove, use a commercially available pulley removing tool. Make sure the jaws of the pulling tool engage the back face of the pulley, not the pulley grooves.

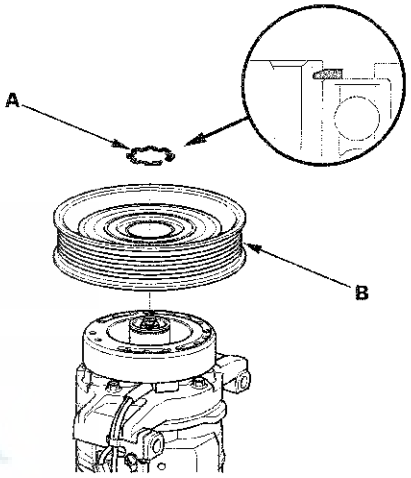

(cont'd)

A/C Compressor Clutch Overhaul (cont'd)

4. Remove the screw, the wire harness clip (A), and the holder (B). Remove the snap ring (C) with snap ring pliers, then remove the field coil (D). Be careful not to damage the field coil or the A/C compressor.

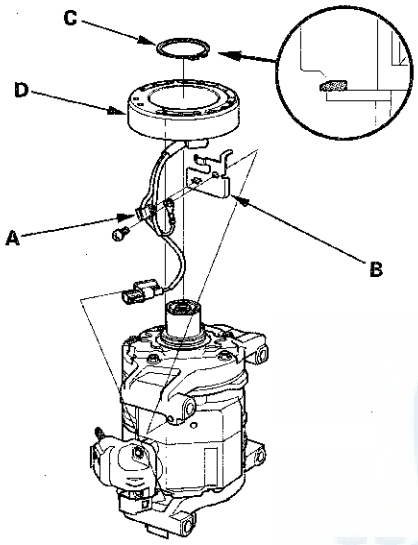

5. Reassemble the clutch in the reverse order of disassembly, and note these items:

   - When replacing the field coil, check that the new coil has the correct resistance (see step 6 on page 21-72).
   - Install the field coil with the wire side facing down, and align the boss on the field coil with the hole in the A/C compressor.
   - Clean the pulley and A/C compressor sliding surfaces with contact cleaner or other non-petroleum solvent.
   - Install new snap rings, note the installation direction, and make sure they are fully seated in the grooves.
   - Make sure that the pulley turns smoothly after it's reassembled.
   - Route and clamp the wires properly, or they can be damaged by the pulley.

6. Cycle the A/C clutch approximately 20 times by running the engine at 1,500—2,000 rpm and setting the A/C system to MAX A/C mode. This procedure seats the clutch friction surfaces, and increases clutch torque capacity.

A/C Compressor Relief Valve Replacement

1. Recover the refrigerant with a recovery/recycling/charging station (see page 21-78).

2. Raise the vehicle on a lift.

3. Remove the relief valve (A) and the O-ring (B). Plug the opening to keep foreign matter from entering the system, and the A/C compressor oil from running out.

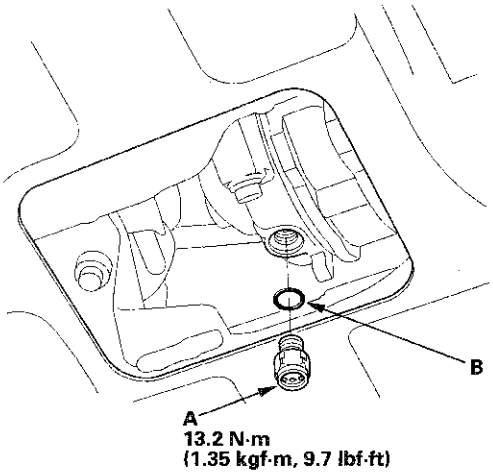

4. Clean the mating surfaces.

5. Replace the O-ring on the relief valve, and apply a thin coat of refrigerant oil before installing it.

6. Remove the plug installed in step 2, then install and tighten the relief valve.

7. Charge the system (see page 21-80).

A/C Condenser Replacement

1. Recover the refrigerant with a recovery/recycling charging station (see page 21-78).

2. Remove the front grille cover and the air intake duct (see page 20-257).

3. Remove the clips (A) and the duct (B). Remove the bolts and the radiator upper mount brackets (C).

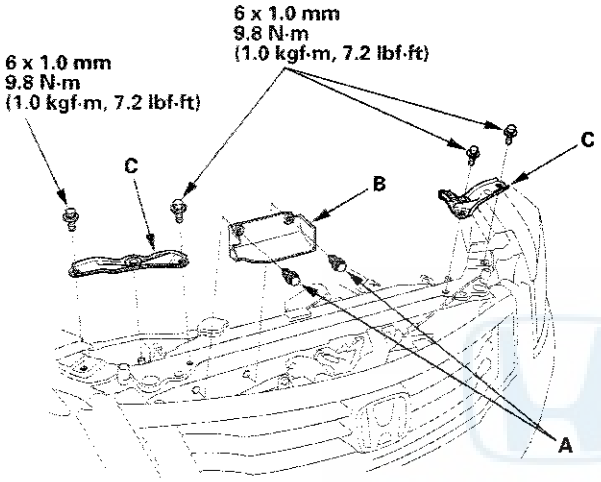

4. Remove the bolt, then disconnect the receiver pipe (A) from the A/C condenser.

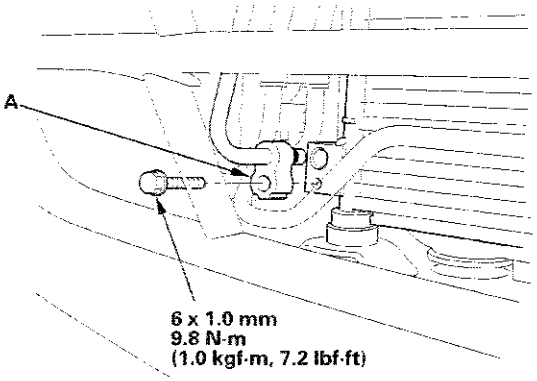

5. Remove the bolt, then disconnect the discharge hose (A) from the A/C condenser.

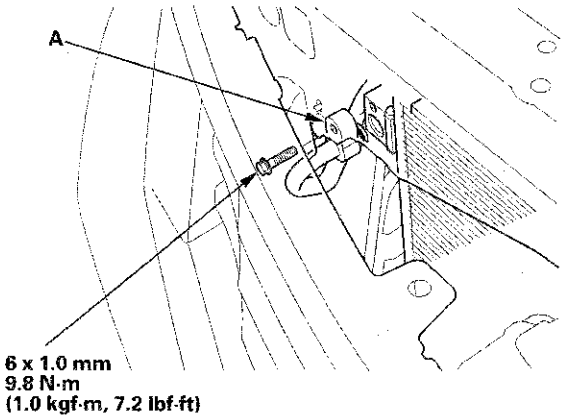

6. Remove the coolant reservoir (A).

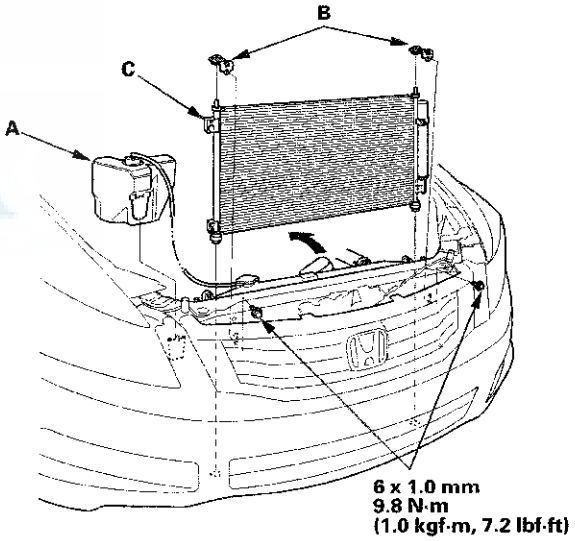

7. Remove the bolts, then remove the A/C condenser upper mount brackets (B). Remove the A/C condenser (C) by lifting it up. Be careful not to damage the radiator or condenser fins when removing the A/C condenser.

(cont'd)

A/C Condenser Replacement (cont'd)

8. Install the A/C condenser in the reverse order of removal, and note these items:

   - If you're installing a new A/C condenser, add refrigerant oil (DENSO ND-OIL 8) (see page 21-6).
   - Replace the O-rings with new ones at each fitting, and apply a thin coat of refrigerant oil before installing them. Be sure to use the correct O-rings for HFC-134a (R-134a) to avoid leakage.
   - Immediately after using the oil, reinstall the cap on the container, and seal it to avoid moisture absorption.
   - Do not spill the refrigerant oil on the vehicle; it may damage the paint; if the refrigerant oil contacts the paint, wash it off immediately.
   - Be careful not to damage the radiator or the A/C condenser fins when installing the A/C condenser.
   - Charge the system (see page 21-80).

Receiver/Dryer Desiccant Replacement

NOTE: Install the receiver/dryer as quickly as possible to prevent the system from absorbing moisture from the air.

1. Remove the A/C condenser (see page 21-75).

2. Remove the bolts from the A/C condenser, then remove the receiver/dryer (A), the bracket (B), and the O-rings (C).

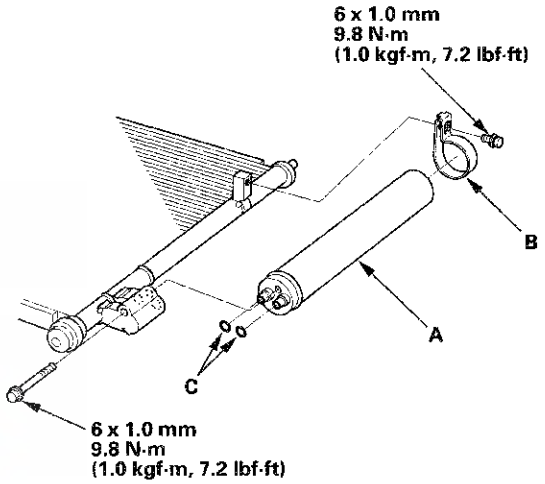

3. Install the receiver/dryer in the reverse order of removal. Replace the O-rings with new ones, and apply a thin coat of refrigerant oil (DENSO ND-OIL 8) before installing them. Be sure to use the correct O-rings for HFC-134a (R-134a) to avoid leakage.

Dust and Pollen Filter Replacement

1. Open the glove box. Remove the glove box stop on the right side, then let the glove box hang down (see page 20-161).

2. Remove the dust and pollen filter assembly (A) from the blower unit.

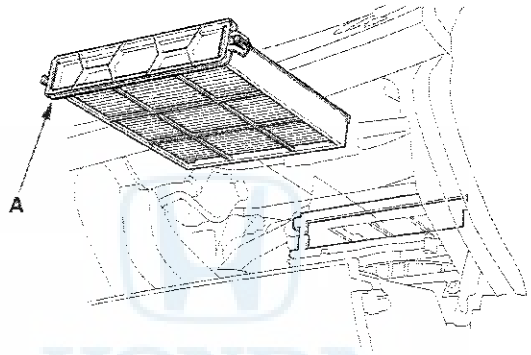

3. Remove the filter (A) from the housing (B), and replace the filter.

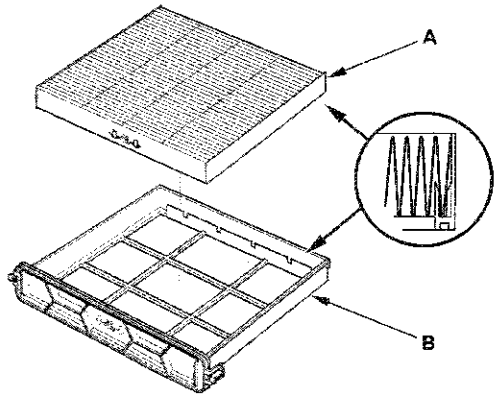

4. Install the filter in the reverse order of removal. Make sure that there is no air leaking out of the blower unit.

Refrigerant Recovery

⚠CAUTION

- Air conditioning refrigerant or lubricant vapor can irritate your eyes, nose, or throat.
- Be careful when connecting service equipment.
- Do not breathe refrigerant or vapor.

NOTE:
- If accidental system discharge occurs, ventilate the work area before resuming service.
- Additional health and safety information may be obtained from the refrigerant and lubricant manufacturers.

1. Connect an R-134a refrigerant recovery/recycling/charging station (A) to the high-pressure service port (B) and the low-pressure service port (C), as shown, following the equipment manufacturer's instructions.

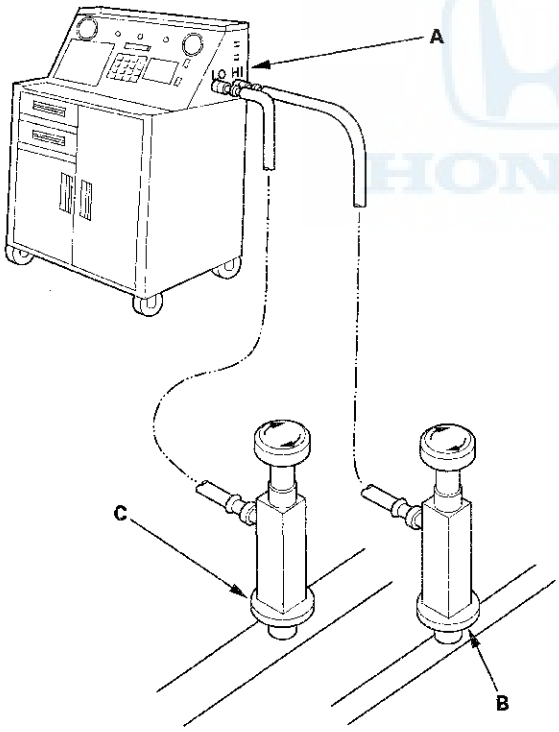

2. Measure the amount of refrigerant oil removed from the A/C system after the recovery process is completed. Be sure to put the same amount of new refrigerant oil back into the A/C system before charging.

System Evacuation

⚠CAUTION

- Air conditioning refrigerant or lubricant vapor can irritate your eyes, nose, or throat.
- Be careful when connecting service equipment.
- Do not breathe refrigerant or vapor.

NOTE:
- If accidental system discharge occurs, ventilate the work area before resuming service.
- Additional health and safety information may be obtained from the refrigerant and lubricant manufacturers.
- Do not allow moisture to contaminate the A/C system oil. Moisture in the oil is difficult to remove, and it can damage the A/C compressor.

1. When an A/C system has been opened to the atmosphere, such as during installation or repair, it must be evacuated using an R-134a refrigerant recovery/recycling/charging station. If the system has been open for several days, the receiver/dryer should be replaced, refrigerant oil should be drained and replaced with new oil, and the system should be evacuated for several hours.

2. Connect an R-134a refrigerant recovery/recycling/charging station (A) to the high-pressure service port (B) and the low-pressure service port (C), as shown, following the equipment manufacturer's instructions. Recover the refrigerant, if any, from the A/C system (see page 21-78).

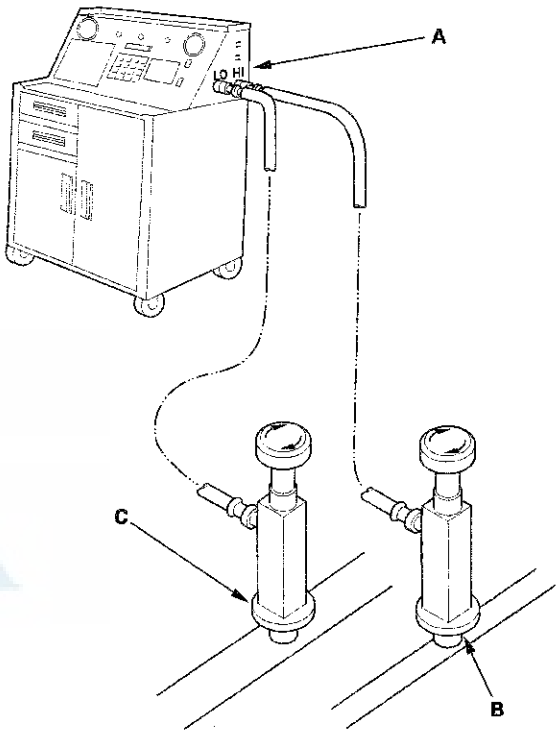

3. Evacuate the system. The vacuum pump should run for a minimum of 45 minutes to eliminate all moisture from the system. When the suction gauge reads —93.3 kPa (—700 mmHg, —27.6 in.Hg) for at least 45 minutes, close all valves, and turn off the vacuum pump.

4. If the suction gauge does not reach approximately —93.3 kPa (—700 mmHg, —27.6 in.Hg) in 15 minutes, there is probably a leak in the system. Partially charge the system, and check for leaks (see page 21-81).

System Charging

⚠CAUTION

- Air conditioning refrigerant or lubricant vapor can irritate your eyes, nose, or throat.
- Be careful when connecting service equipment.
- Do not breathe refrigerant or vapor.

NOTE:
- If accidental system discharge occurs, ventilate the work area before resuming service.
- Additional health and safety information may be obtained from the refrigerant and lubricant manufacturers.

1. Connect an R-134a refrigerant recovery/recycling/charging station (A) to the high-pressure service port (B) and the low-pressure service port (C), as shown, following the equipment manufacturer's instructions.

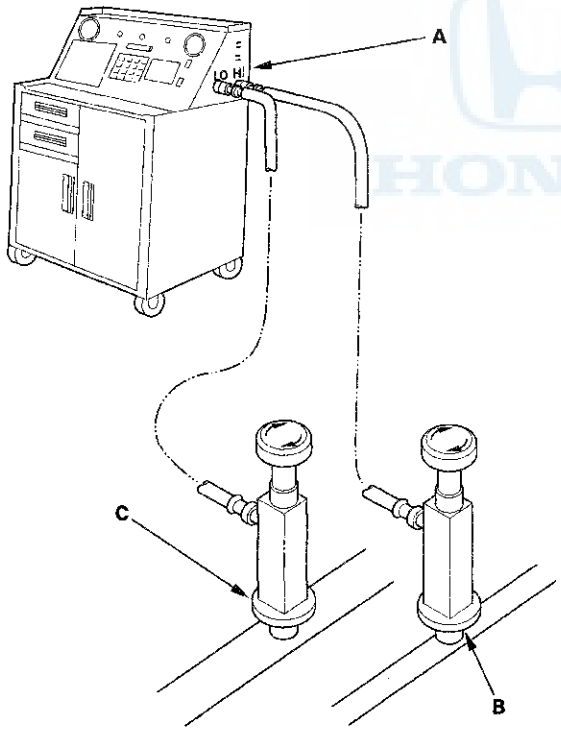

2. Recover the refrigerant in the A/C system (see page 21-78).

3. Evacuate the system until the suction gauge reads approximately −93.3 kPa (−700 mmHg, −27.6 in.Hg). Check that the system holds a vacuum for 15 minutes.

   - If the A/C system hold vacuum for 15 minutes, the system does not have a leak. Finish the system evacuation (see page 21-79), then go to step 4.
   - If the A/C system does not hold vacuum for 15 minutes, the A/C system has a leak. Find and repair leak (see page 21-81).

4. Add the same amount of new refrigerant oil to the system that was removed during recovery. Use only DENSO ND-OIL 8 refrigerant oil.

5. Charge the system with the specified amount of R-134a refrigerant. Do not overcharge the system; the A/C compressor will be damaged.

   Select the appropriate units of measure for your refrigerant charging station.

   Refrigerant Capacity:
   400 to 450 g
   0.40 to 0.45 kg
   0.9 to 1.0 lbs
   14.1 to 15.9 oz

6. Check for refrigerant leaks (see page 21-81).

7. Check the system performance (see page 21-88).

Refrigerant Leak Test

Special Tools Required
- Leak detector YGK-H-10PM
- Leak detector HLD-100
- Leak detector TIFZX-1, or commercially available
- OPTIMAX Jr. A/C Leak Detection Kit (TRP124893)

These tools are available through the Honda Tool and Equipment Program; call 888-424-6857

⚠CAUTION

- Air conditioning refrigerant or lubricant vapor can irritate your eyes, nose, or throat.
- Be careful when connecting service equipment.
- Do not breathe refrigerant or vapor.
- Do not operate the leak detector near flammable vapors. Its sensor operates at high temperatures, and could ignite the vapors, resulting in personal injury and/or damage to the equipment.

NOTE:
- If an accidental system discharge occurs, ventilate the work area before resuming service.
- Additional health and safety information may be obtained from the refrigerant and lubricant manufacturers.
- Check the system for leaks using an R-134a refrigerant leak detector with an accuracy of 14 g (0.5 oz) per year or better.

Leak Detector Usage Tips (Refer to the Operator's Manual for complete operating instructions):

- Position the vehicle in a wind-free work area. This will aid in detecting small leaks.
- When using the leak detector for the first time, allow it to warm up for 2 minutes with the probe in a clean atmosphere. This lets the temperature sensor in the detector stabilize.
- The calibration check should be done in the "Search 2" mode. Once that is done, the other check modes do not need calibrating.
- When leak checking through the HVAC module drain hose, avoid drawing water into the probe. Water can damage the internal pump and sensor.
- Avoid creasing the flexible probe extension. Creases can restrict air flow and give false readings.
- Because the detector recalibrates itself for ambient gases, it may be necessary to move the detector away from the leak to clear the sensor. Once the sensor has cleared, recheck the suspected leak.
- When removing the clear probe tip, be careful not to lose the flow ball.
- R-134a is heavier than air; always check below and to the sides of all potential leak sources.
- Halogen leak detectors are sensitive to chemicals: windshield washing solutions, solvents/cleaners, and some vehicle adhesives. Keep these chemicals out of the area when doing leak detection.

(cont'd)

Refrigerant Leak Test (cont'd)

Fluorescent Dye Usage Tips

- Use only Tracer-Stick single dose fluorescent dye capsules from Tracerline®. Other dyes contain solvents that may contaminate the refrigerant oil, leading to component failure.
- Adding excessive amounts of dye can damage the compressor.
- PAG oil is water soluble, so condensation on the evaporator core or the refrigerant lines may wash the PAG oil and fluorescent dye away from the actual leak. Condensation may also carry dye through the HVAC module drain.
- After checking and repairing leaks, thoroughly clean any residual dye from the areas where leaks were found. Use GLO-AWAY dye cleaner, from Tracerline®, and hot water to remove the dye (follow the instructions on the bottle). Residual dye stains can cause misdiagnosis of any future A/C system leaks.
- If any refrigerant dye contacts an exterior paint surface, remove it by doing this:
  - Carefully wash the affected surfaces to remove any dirt, and to prevent paint scratching.
  - Mix water and isopropyl alcohol in a 50/50 mixture. Soak a soft 100 percent cotton towel with the water/alcohol mixture, and place the cloth on the affected areas to remove the dye.
  - After removing the dye with the water/alcohol-soaked cloth, carefully wash the affected areas, and check that there is no remaining dye.

1. Connect an R-134a refrigerant recovery/recycling/charging station (A) to the high-pressure service port (B) and the low-pressure service port (C), as shown, following the equipment manufacturer's instructions.

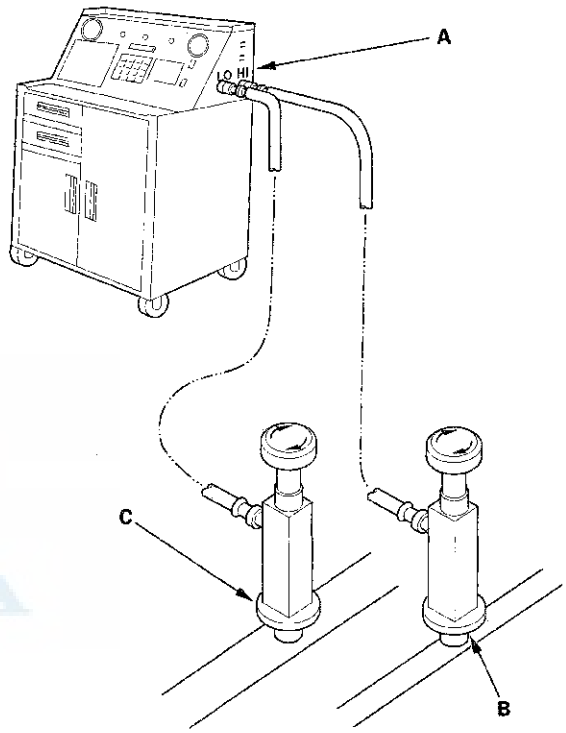

2. Recover refrigerant from the A/C system (see page 21-78), and evacuate the system (see page 21-79). If the system achieves a vacuum of approximately −93.3 kPa (−700 mmHg, −27.6 in.Hg) in 15 minutes, and holds the vacuum for 15 minutes, then the system does not have a leak at this time. If the system cannot achieve or hold a vacuum, continue the refrigerant leak check.

3. Open the high pressure valve to charge the system to the specified capacity. Select the appropriate units of measure for your refrigerant charging station.

   Refrigerant Capacity:
   400 to 450 g
   0.40 to 0.45 kg
   0.9 to 1.0 lbs
   14.1 to 15.9 oz

4. With the engine OFF, use a halogen leak detector first to detect the leak source. Follow a continuous path in order to ensure that you will not miss any possible leaks. Test the following areas of the system for leaks:

Possible Leak Area	Diagnostic Procedure with the Leak Detector	Notes
Service Ports	• Check the service ports with the detector. • If the detector "sniffs" leak, use fluorescent dye to confirm it.	When capping the service ports, ensure that the seals on the port caps are in place, and that the caps are tight. The caps are used as the final seals in the system.
Condenser	If the detector "sniffs" a leak, use fluorescent dye to confirm it.	• Check for joints or connections coated with oily dust. • Check for damaged and corroded areas. • Check all fittings, couplings, brazed/welded areas and areas around attachment points. • Move the probe slowly (1 inch/second or less), and keep it within 1/4 inch of the component being checked. This maximizes the chance of detecting a leak. • If you detect a leak, blow compressed air over the area, then recheck for leaks. For large leaks, clearing the area with compressed air may help you pinpoint the leak source.
A/C Lines (Low pressure side)	• Wiggle the hose when checking crimped metal ends on rubber hoses. • If the detector "sniffs" a leak, use fluorescent dye to confirm it.	• Check all fittings, couplings, pressure switches, brazed/welded areas, and areas around attachment points on A/C lines and components. • Check for damaged and corroded areas. • Move the probe slowly (1 inch/second or less), and keep it within 1/4 inch of the component being checked. This maximizes the chance of detecting a leak.

HONDA

(cont'd)

Refrigerant Leak Test (cont'd)

5. Close the quick coupler valves, then disconnect the quick couplers from the vehicle service ports.

6. Attach the universal connect set, from the Optimax Jr. Leak Detection Kit, to the service valve fitting. Close the control valve (the black knob on the connect set).

7. Attach the charging station low pressure hose quick coupler to the service valve fitting, and open the quick coupler valve. Evacuate the connect set using the charging station vacuum pump, then close the quick coupler valve.

8. Detach the universal connect set, and install a Tracer-Stick® dye capsule between the connect set and the service valve fitting (see the manufacturer's instructions for more detail).

9. Attach the quick coupler on the universal connect set to the low pressure service port on the vehicle. Open the charging station low pressure hose quick coupler valve, but do not open the control valve.

10. Start the engine, and set the A/C system to MAX A/C. Open the control valve to let refrigerant and the dye enter the A/C system through the low pressure service port. Close the control valve when the Tracer-Stick® dye capsule is empty.

11. Run the engine and A/C system for 15 minutes to thoroughly circulate the dye. Then shut the engine off, and inspect the following areas of the system for leaks:

    NOTE:
    - Check for leaks in a dark work area, and use the UV light and the special glasses from the leak check kit. Other UV lights may not work well with the Tracer-Stick® dye.
    - Small leaks may take up to 1 week of vehicle operation (with normal A/C use) to become visible.

Possible Leak Area	Diagnostic Procedure with Fluorescent Dye
Service Ports	If a leak is found, replace the schrader valve on the service port.
A/C Lines	• Use a permanent marker pen to circle the leak area. • If a leak is found, remove and replace the A/C line (see page 21-8).
A/C Condenser	• If a leak is found, remove the A/C condenser (see page 21-75). • Determine whether leak is in the A/C condenser or the receiver/dryer. • Use a permanent marker pen to circle the leak area. • Replace either the receiver/dryer (see page 21-76), or the A/C condenser (see page 21-75), depending upon which is leaking.

Possible Leak Area	Diagnostic Procedure with Fluorescent Dye
A/C Compressor	• Check for leaks at all of the A/C compressor joints, the clutch center, the A/C compressor front housing bolts, and the scroll bolts on the back of the A/C compressor. • If a leak is found, use a permanent marker pen to circle the leak area. • If the A/C compressor relief valve appears to be leaking, determine whether the leak is coming from the relief valve, or the joint between the A/C compressor casing and the valve. If the leak is from the relief valve, check the A/C system pressures, and refer to the pressure test table in the A/C system test (see page 21-88). If the leak is from the casing/valve joint, replace the A/C compressor relief valve (see page 21-74). • If the leak is coming from the suction hose and/or discharge hose fittings on the A/C compressor, clean the A/C fittings and replace the suction/discharge fitting O-rings. • For all other A/C compressor leaks, remove and replace the A/C compressor (see page 21-69).
Evaporator	• Start checking for evaporator leaks by illuminating the evaporator drain tube area. • If a leak is found, remove the evaporator core (see page 21-64). • Determine whether leak is from evaporator or expansion valve. • Use permanent marker pen to circle leak area. • Replace the expansion valve (see page 21-66), or the evaporator core (see page 21-64), depending upon which is leaking.

HONDA

A/C System Noise Check

⚠CAUTION

- Air conditioning refrigerant or lubricant vapor can irritate your eyes, nose, or throat.
- Be careful when connecting service equipment.
- Do not breathe refrigerant or vapor.

The A/C system noise check will help you determine the source of abnormal A/C system noise.

NOTE:
- If an accidental system discharge occurs, ventilate the work area before resuming service.
- Additional health and safety information may be obtained from the refrigerant and lubricant manufacturers.
- Identify the conditions when the noise occurs. The weather, the vehicle speed, the vehicle being in gear or in neutral, the engine temperature, or other conditions may be factors in determining the noise source.
- Do an A/C system inspection (see page 21-9), and correct any problems found prior to diagnosing abnormal noises.
- Abnormal A/C noises can be misleading. For example, a sound similar to a failed bearing may be caused by loose fasteners, loose mounting brackets, or a faulty A/C compressor clutch assembly.

1. Inspect the air inlet grille in the cowl cover for debris. If debris is present, remove it.

2. Sit inside the vehicle, close the doors and windows, and turn the ignition switch to ON (II), but do not start the engine. Cycle the HVAC system through all blower speeds and all air distribution modes to determine where and when the noise occurs.

3. Operate the blower at each speed with the engine and A/C off, and check for unusual noises and excessive vibration. If noise and/or vibration are present, do the following checks:

   -1 If the noise or vibration occurs only in a specific mode or setting, then check these items:

   - Operation of the mode control motor, door, and linkage.
   - Operation of the air mix control motor(s), door(s), and linkage.
   - Operation of the recirculation control motor, door, and linkage.

   -2 If there is a squeaking or chirping noise, but no unusual vibration, replace the blower motor (see page 21-64).

   -3 Remove the blower unit (see page 21-62), and check for foreign material (leaves or twigs, for example) on the blower motor and fan. If foreign material is present, remove it, and recheck for noise. If you don't find any foreign material, remove the blower motor (see page 21-64), and check these items:

   - Check if the fan blades are cracked or broken.
   - Make sure the fan retainer is tight.
   - Inspect the fan alignment on the blower motor shaft.

   Replace the blower motor if any problems are present.

4. Set up the vehicle for the running A/C checks:

   - Select a quiet area for testing.
   - Apply the parking brake.
   - Shift the vehicle in PARK or in Neutral.
   - Start the engine.
   - Set the temperature control dial to Max Cool.
   - Set the mode control switch to Vent.
   - Set the fan control dial to minimum (but not OFF).
   - Turn the A/C switch ON.

   Switch the A/C compressor on and off several times to clearly identify the sound during A/C compressor operation. Listen to the noise while the A/C compressor clutch is engaged and disengaged. Probe the A/C system with a stethoscope to pinpoint the noise.

   NOTE: If the noise does not change when the A/C compressor clutch engages or disengages, the noise may be caused by an engine-related component. Probe the engine area with a stethoscope to pinpoint the noise.

5. Turn the ignition switch to LOCK (0), and check the drive belt for excessive wear, oil contamination, improper routing, or a faulty belt tensioner (see page 4-30). Correct any problems found. Start the engine, run the A/C system, and check if the noise is coming from the drive belt, the belt tensioner or any of the pulleys. Repair or replace any faulty components.

6. Listen for noises coming from the A/C lines, the A/C hoses, the A/C condenser, the evaporator, the receiver-drier, or the expansion valve, and check these items:

   - Noises caused by A/C components touching other components or the body. Reroute or insulate the A/C component(s) as needed, and recheck for noise.
   - Loose, damaged or excessively worn A/C components or mounting hardware. Repair or replace the faulty component(s) or hardware, and recheck for noise.
   - A moaning noise coming from the A/C suction line. If there is a moaning noise, check the system refrigerant charge (see page 21-80). If the refrigerant charge is OK, replace the receiver/dryer.

7. Check the operation of the A/C compressor clutch:

   - Make sure A/C compressor clutch engages without slipping. If the clutch does not engage, troubleshoot the A/C compressor clutch circuit (see page 21-49). If the A/C compressor clutch slips, replace the complete clutch assembly (see page 21-72).
   - Make sure the A/C compressor clutch disengages. If the clutch does not disengage, do the A/C compressor clutch check (see page 21-71). If the A/C compressor clutch is OK, replace the A/C compressor (see page 21-69).
   - Make sure the A/C compressor clutch cycles normally. If the A/C compressor clutch is cycling rapidly, the A/C system is probably low on refrigerant due to a leak. Do the refrigerant leak check (see page 21-81). If the refrigerant charge is OK, and there are no leaks, troubleshoot the A/C compressor clutch circuit.

8. Listen with a stethoscope for noises coming from the A/C compressor, and check these items:

   - The noise changes when the A/C compressor clutch disengages. If the noise does not change when the A/C compressor disengages, the noise may be caused by an engine-related component. Probe the engine area with a stethoscope to pinpoint the noise.
   - The A/C system operating pressures are normal. If the system pressures are abnormal, troubleshoot the problem using the pressure test table in the A/C system test (see page 21-88). Correct the pressure-related problem(s), and recheck for noise.
   - The A/C compressor hose connections, mounting brackets, and fasteners are in good condition. If any of these components are loose, damaged, or excessively worn, repair or replace the faulty component(s), and recheck for noise. If these components are in good condition, and the noise is still present, replace the A/C compressor (see page 21-69).

A/C System Test

Performance Test

⚠CAUTION

- Air conditioning refrigerant or lubricant vapor can irritate your eyes, nose, or throat.
- Be careful when connecting service equipment.
- Do not breathe refrigerant or vapor.

The performance test will help determine if the A/C system is operating within specifications.

NOTE:
- If accidental system discharge occurs, ventilate the work area before resuming service.
- Additional health and safety information may be obtained from the refrigerant and lubricant manufacturers.

1. Do the A/C system inspection (see page 21-9), and correct any problem found.

2. Connect an R-134a refrigerant recovery/recycling/charging station to the high-pressure service port and the low-pressure service port, following the equipment manufacturer's instructions.

3. Determine the relative humidity and air temperature.

4. Open the glove box. Remove the damper and the glove box stop on each side, then let the glove box hang down (see page 20-161).

5. Insert a thermometer (A) in the center vent.

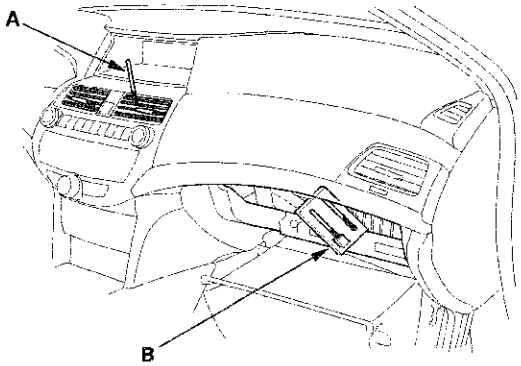

6. Place another thermometer (B) near the blower unit's recirculation inlet duct.

7. Test conditions:

   - Move the vehicle out of direct sunlight and let it cool down to the surrounding (ambient) temperature. If necessary, wash the vehicle to cool it down more quickly.
   - The ambient temperature must be at least 60 °F (16 °C).
   - Open hood.
   - Open front doors.
   - Set the temperature control dial to Max Cool, the mode control switch to Vent, and the recirculation control switch to Recirculate.
   - Turn the A/C switch ON and the fan switch to Max.
   - Run the engine at 1,500 rpm.
   - No driver or passengers in the vehicle.

8. Inspect the A/C components for the following conditions:

   - A/C compressor cultch not engaged.
   - Abnormal frost areas.
   - Unusual noises.

   If you observe any of these conditions, refer to the symptom troubleshooting.

9. After running the air conditioning for 10 minutes under the above test conditions, read the delivery temperature from the thermometer in the center vent, the intake temperature near the blower unit, and the high and low system pressure from the A/C gauges.

10. To complete the vent (delivery)/ambient air (intake) temperature chart:

- Mark the vent (delivery) temperature on the vertical line.
- Mark the ambient air (intake) temperature on the bottom line.
- Draw a vertical line from the ambient air (intake) temperature mark.
- Draw a horizontal line from the vent (delivery) temperature mark until it intersects the vertical line.

NOTE: The vent temperature and ambient air temperature should intersect in the shaded area. Any measurements outside the area may indicate the need for further inspection.

Ambient Air (Intake) Temperature vs. Vent (Delivery) Temperature

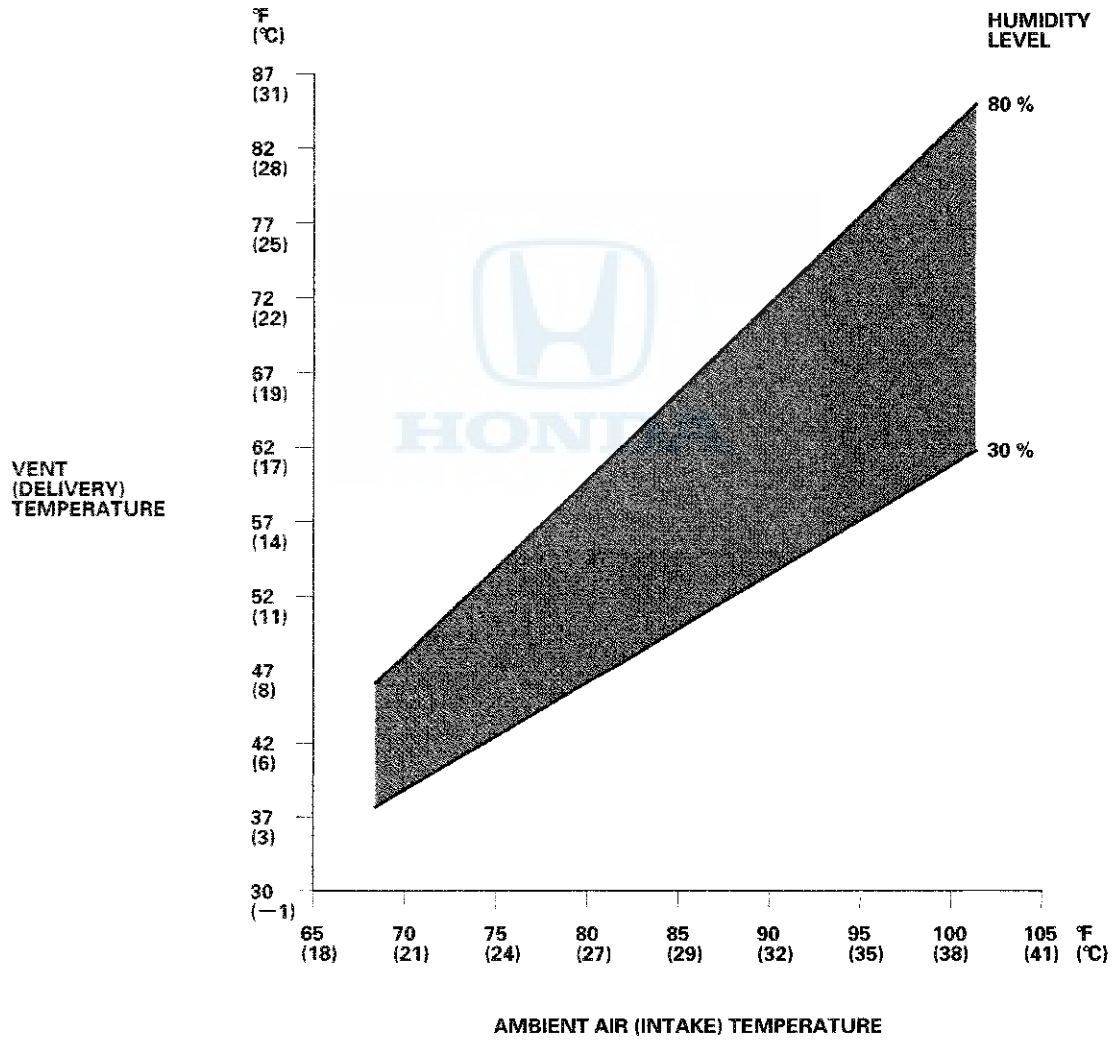

(cont'd)

A/C System Test (cont'd)

11. To complete the high side (discharge) pressure/ambient air (intake) temperature chart:

    - Mark the high side (discharge) pressure on the vertical line.
    - Mark the ambient air (intake) temperature on the bottom line.
    - Draw a vertical line from the ambient air (intake) temperature mark.
    - Draw a horizontal line from the high side (discharge) pressure mark until it intersects the vertical line.

    NOTE: The high side pressure and ambient air temperature should intersect in the shaded area. Any measurements outside the area may indicate the need for further inspection.

Ambient Air (Intake) Temperature vs. High Side (Discharge) Pressure

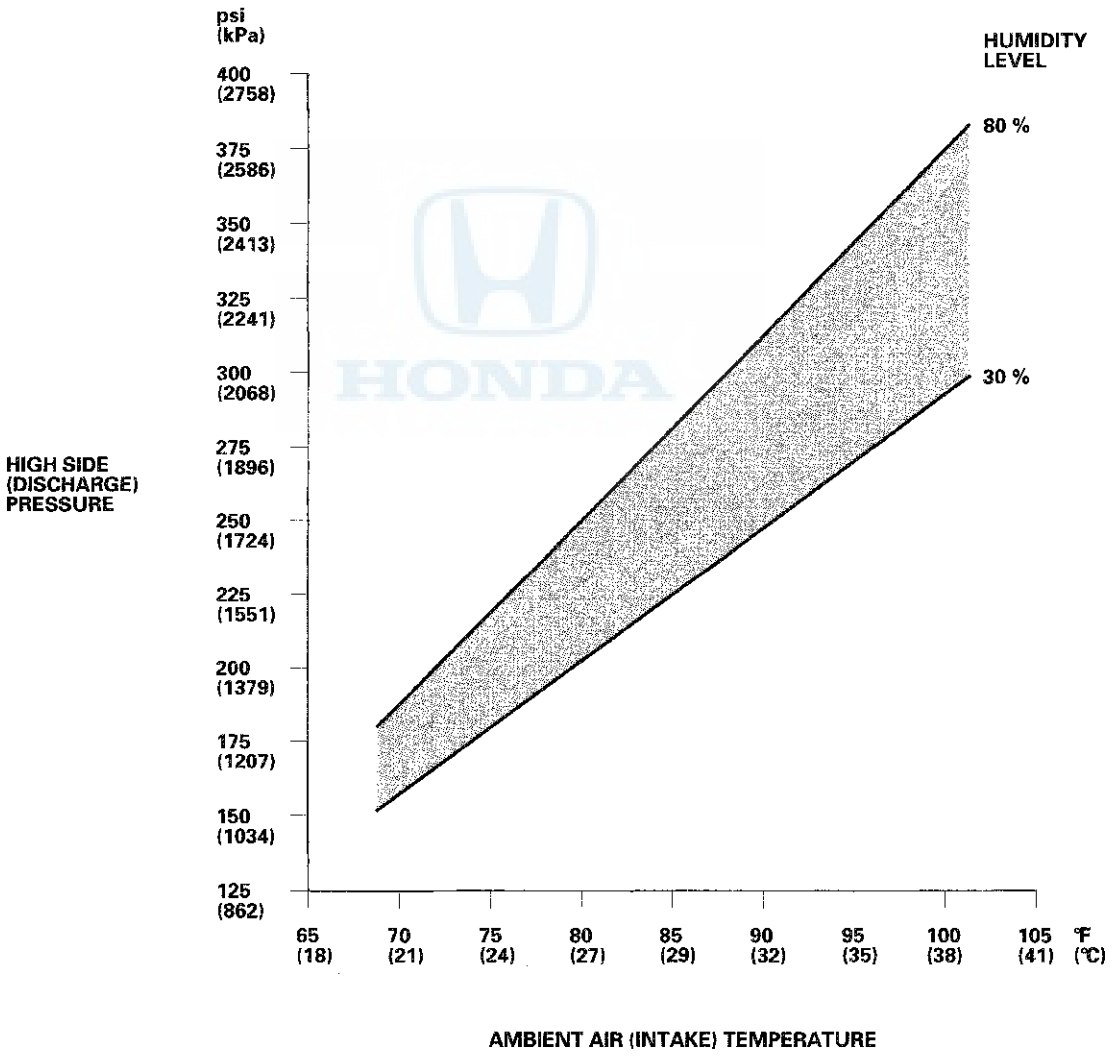

12. To complete the low side (suction) pressure/ambient air (intake) temperature chart:

- Mark the low side (suction) pressure along the vertical line.
- Mark the ambient air (intake) temperature along the bottom line.
- Draw a vertical line from the ambient air (intake) temperature mark.
- Draw a horizontal line from the low side (suction) pressure mark until it intersects the vertical line.

NOTE: The low side pressure and ambient air temperature should intersect in the shaded area. Any measurements outside the area may indicate the need for further inspection.

Ambient Air (Intake) Temperature vs. Low Side (Suction) Pressure

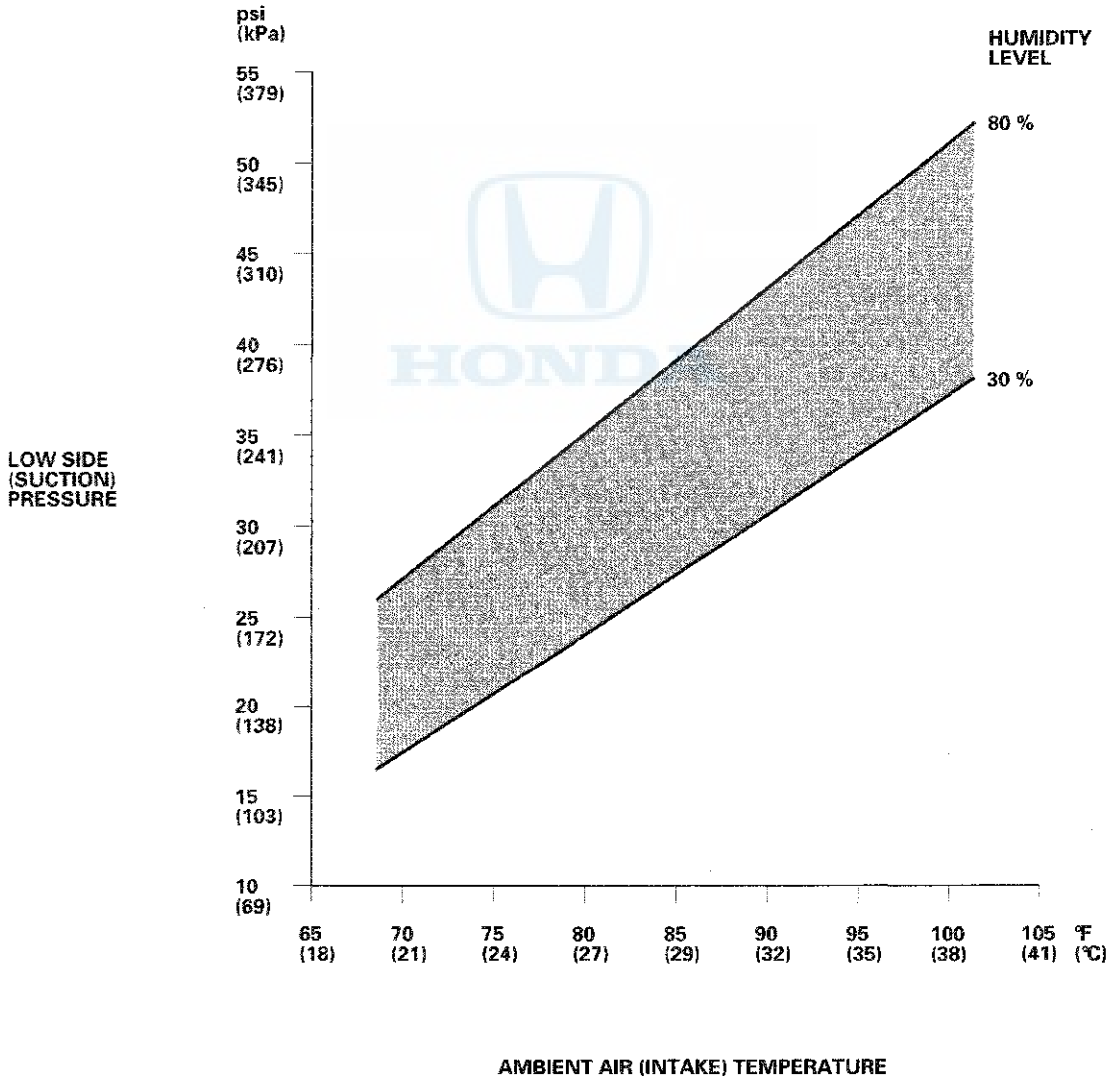

(cont'd)

A/C System Test (cont'd)

Pressure Test

Test results	Related symptoms	Probable cause	Remedy
Suction and discharge pressures are normal	Warm air from the vents.	• The A/C system contains too much refrigerant oil • The air mix door is not operating properly	• Recover refrigerant (see page 21-78), and evacuate the system (see page 21-79). Adjust the amount of oil in the system, then recharge the system (see page 21-80). • Check air mix door operation (see page 21-56), and repair as needed.
Suction and discharge pressures are roughly equal and steady	The suction and discharge pressures equalize when the engine is revved.	The A/C compressor clutch or the drive belt is slipping, or the A/C compressor shaft seal is leaking	• Check whether the A/C compressor clutch or the drive belt is slipping. • If the drive belt is slipping, replace the drive belt (see page 4-30). • If the A/C compressor clutch is slipping, replace it (see page 21-72). • Check the A/C compressor shaft seal. If it's leaking, replace the A/C compressor (see page 21-69).
Suction and discharge pressures are roughly equal but fluctuate	Suction and discharge pressures fluctuate while running. Pressures equalize as soon as the A/C compressor disengages.	The A/C compressor discharge valve or the A/C compressor gasket is faulty	Replace the A/C compressor (see page 21-69).
Suction and discharge pressures are roughly equal and abnormally low	The suction and discharge pressures do not change during continued operation.	The A/C system is undercharged	Recover refrigerant (see page 21-78), then do the refrigerant leak check (see page 21-81). Repair any leaks, then recharge the system (see page 21-80).
Suction and discharge pressures are abnormally high, but normalize when the A/C condenser is cooled	The suction pressure decreases when cool water is sprayed on the A/C condenser.	The A/C system is overcharged	Recover refrigerant (see page 21-78), evacuate the system (see page 21-79), and recharge the system to specifications (see page 21-80).
Suction and discharge pressures are abnormally high, and refrigerant line temperatures are abnormal	• The high pressure vapor line to the A/C condenser is too hot. • The low pressure liquid line from the expansion valve is not cold. • There is an abrupt temperature drop along a refrigerant line, or in the A/C condenser or evaporator.	The A/C system refrigerant flow is restricted	Replace the restricted line or component.
Suction and discharge pressures are abnormally high, but drop rapidly when the A/C compressor disengages	• After stopping the A/C compressor, the discharge pressure quickly drops about 196 kPa (28 psi), then falls gradually. • The input and output temperatures at the expansion valve are not similar.	There is excess air in the A/C system	Recover refrigerant (see page 21-78), evacuate the system (see page 21-79), and recharge the system (see page 21-80).

Test results	Related symptoms	Probable cause	Remedy
Suction and discharge pressures are abnormally high, and there is little or no airflow through the A/C condenser		• The A/C condenser and/or radiator fins are clogged • The A/C condenser fins are damaged • The A/C condenser and/or radiator fans are not working properly	• Clean debris from the A/C condenser and/or radiator fins. • Comb the A/C condenser fins to repair any damage. • Troubleshoot the A/C condenser fan and/or the radiator fan circuit(s).
The suction pressure is high and the discharge pressure is low. Both pressures are steady	• The liquid line temperature is similar on both sides of expansion valve. • System pressures do not vary at a steady engine speed.	The expansion valve is stuck open	Replace the expansion valve (see page 21-66).
The suction pressure is low, the discharge pressure is high, and the refrigerant temperature changes abnormally somewhere in the system	• The high pressure liquid line going into the expansion valve is cold. • There is an abrupt temperature drop in the line between the A/C compressor and the A/C condenser, or in the line between the A/C condenser and the expansion valve.	The A/C system refrigerant flow is restricted	Replace the restricted line or component.
The suction pressure is high, the discharge pressure is low, and there are particle contaminants in the refrigerant lines	The expansion valve and/or the A/C compressor discharge hose are contaminated with metal flakes or desiccant particles.	The A/C compressor is malfunctioning	Replace the A/C compressor (see page 21-69). If the system is contaminated with desiccant, replace the receiver/dryer (see page 21-76).
The suction pressure is high, the discharge pressure is low, and the pressures quickly change when the A/C disengages	The discharge and suction pressures equalize soon after the A/C compressor stops.	The A/C compressor seal is faulty	Replace the A/C compressor (see page 21-69).
Suction and discharge pressures are both low and none of the refrigerant lines are cold	There is no frost on the expansion valve, and the low-pressure liquid line is not cold.	The A/C system has a leak (very low refrigerant charge)	Do the refrigerant leak check (see page 21-81), repair any leaks, and recharge the A/C system (see page 21-80).
Suction and discharge pressures are both low, and the expansion valve or the suction line is abnormally cold	• The temperature around the expansion valve is too low compared to the temperature around the receiver/dryer. • The low pressure (suction) hose/line is cooler than the evaporator.	• The discharge hose/line is clogged or kinked, which is restricting refrigerant flow • The suction hose/line is clogged or kinked, which is restricting refrigerant flow	Repair or replace the faulty A/C line (see page 21-8).
Initially, the suction and discharge pressure are normal, but both become abnormally low during operation	During extended operation, the air flow from the vents decreases.	The evaporator is freezing up	Run the fan with A/C compressor off to warm the evaporator, then test the evaporator temperature sensor (see page 21-54). If necessary, replace the evaporator temperature sensor.

(cont'd)

A/C System Test (cont'd)

Test results	Related symptoms	Probable cause	Remedy
Suction and discharge pressures are both low and there are abnormal temperature changes at the expansion valve	• During extended operation, warm air comes out of the vents, the suction pressure decreases, and heavy frost occurs on the low pressure liquid line. • The low pressure liquid line is cold at the expansion valve, but warm after the valve. • There is frost on the expansion valve.	The expansion valve is stuck closed	• Replace the expansion valve (see page 21-66), and the receiver/dryer (see page 21-76). • Check the old expansion valve for contamination. If contaminants are found, replace the component that caused the contamination.
The discharge pressure is low, the suction pressure is extremely low, and the expansion valve outlet is abnormally warm	There is no frost on the expansion valve outlet, and the liquid line temperature changes significantly across the expansion valve.	There is excessive moisture in the A/C system	Recover refrigerant (see page 21-78), then replace the receiver/dryer (see page 21-76). Evacuate the system (see page 21-79), and recharge the A/C system (see page 21-80).
The discharge pressure is low, the suction pressure is extremely low, and the suction line is abnormally cold	There is frost on the line from the evaporator to the A/C compressor.	The evaporator is internally contaminated or plugged	Recover refrigerant (see page 21-78), then replace the evaporator. Evacuate the system (see page 21-79). and recharge the A/C system (see page 21-80).
The discharge pressure is low, the suction pressure is extremely low, and the refrigerant temperature doesn't change going through the expansion valve	• There is no frost on the expansion valve, and the low pressure liquid line is not cold. • The liquid line temperatures are similar on both sides of expansion valve.	The expansion valve is faulty	Replace the expansion valve (see page 21-66).
The discharge pressure is low, the suction pressure is extremely low, and the expansion valve is abnormally cold	There is frost on the expansion valve.	Excessive moisture in the system is freezing the expansion valve	Recover refrigerant (see page 21-78), the replace the receiver/dryer. Evacuate the system (see page 21-79), and recharge the A/C system (see page 21-80).
The discharge pressure is low, the suction pressure is extremely low, and the high pressure liquid line is abnormally cold	There is frost on the line from the receiver/dryer to the expansion valve.	The receiver/dryer is clogged	Recover refrigerant (see page 21-78), then replace the receiver/dryer. Evacuate the system (see page 21-79). and recharge the A/C system (see page 21-80).

Component Location Index

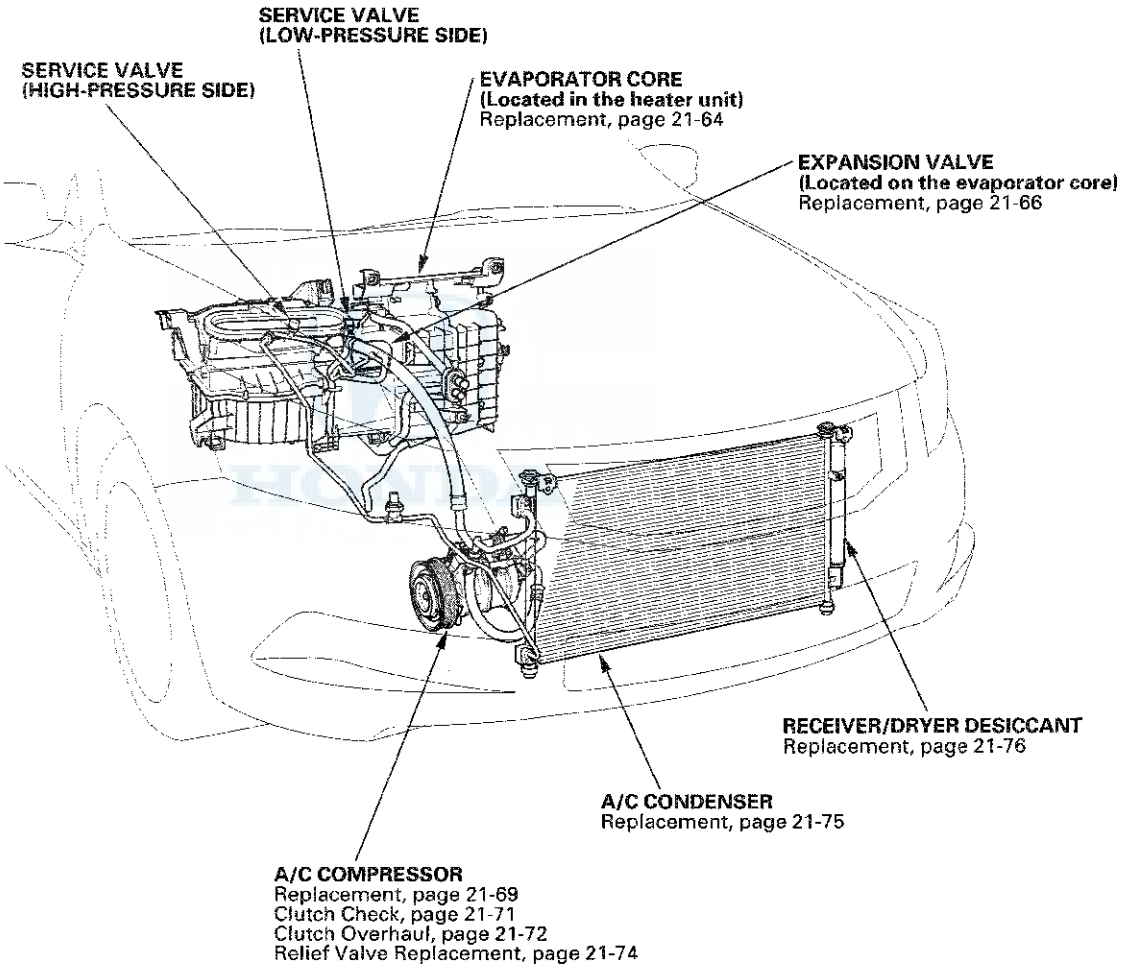

(cont'd)

Component Location Index (cont'd)

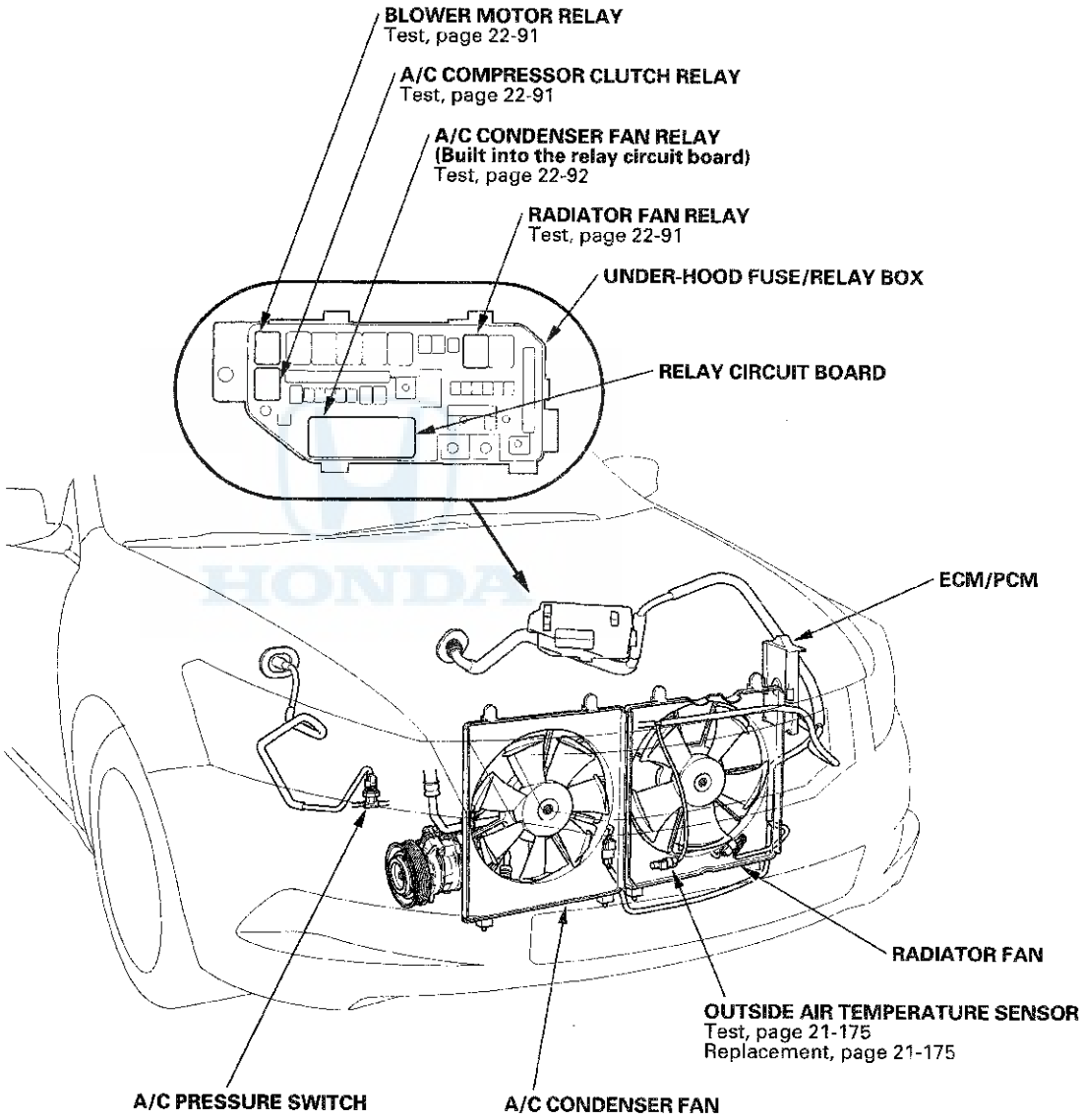

With navigation

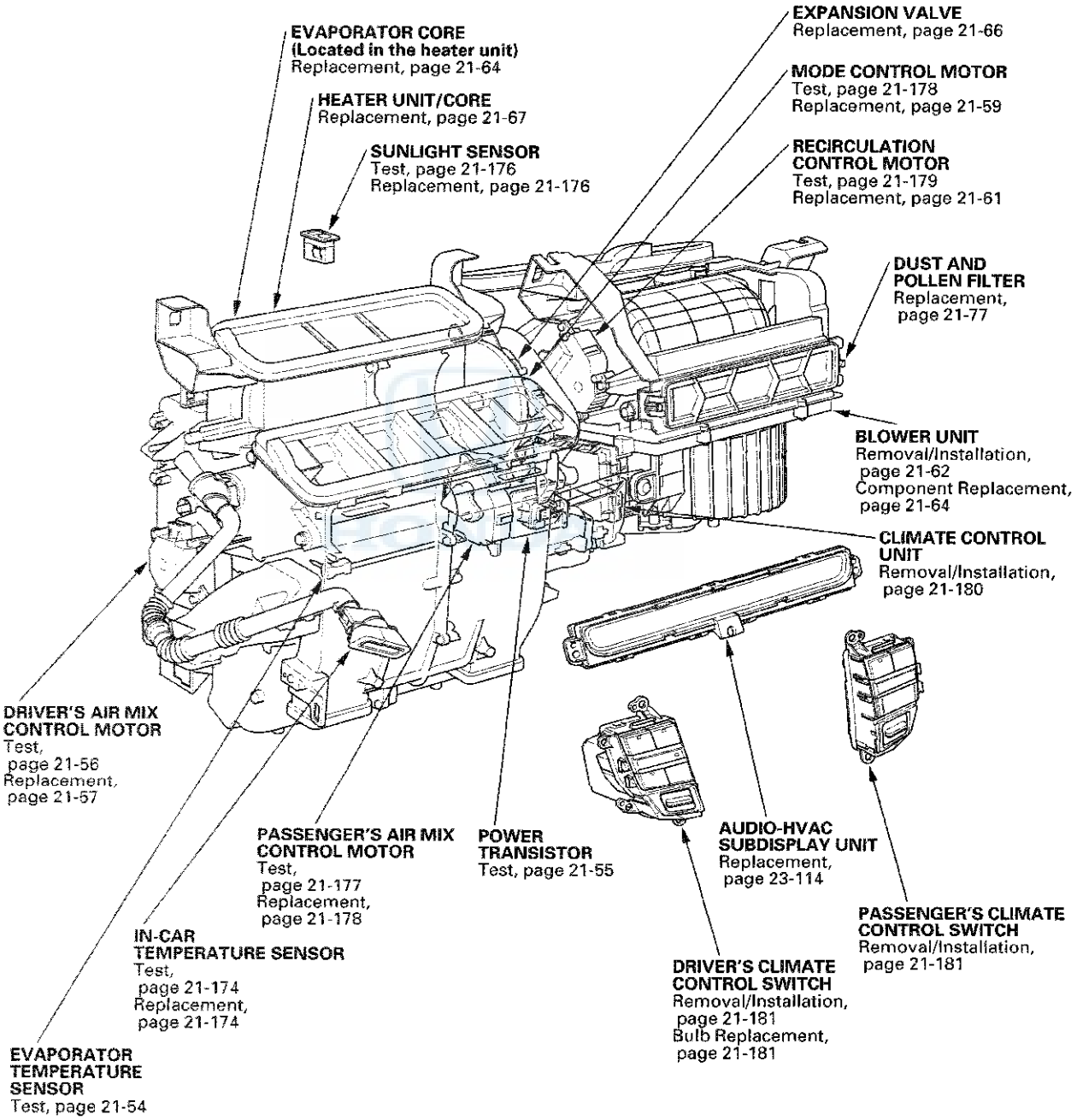

(cont'd)

Component Location Index (cont'd)

Without navigation

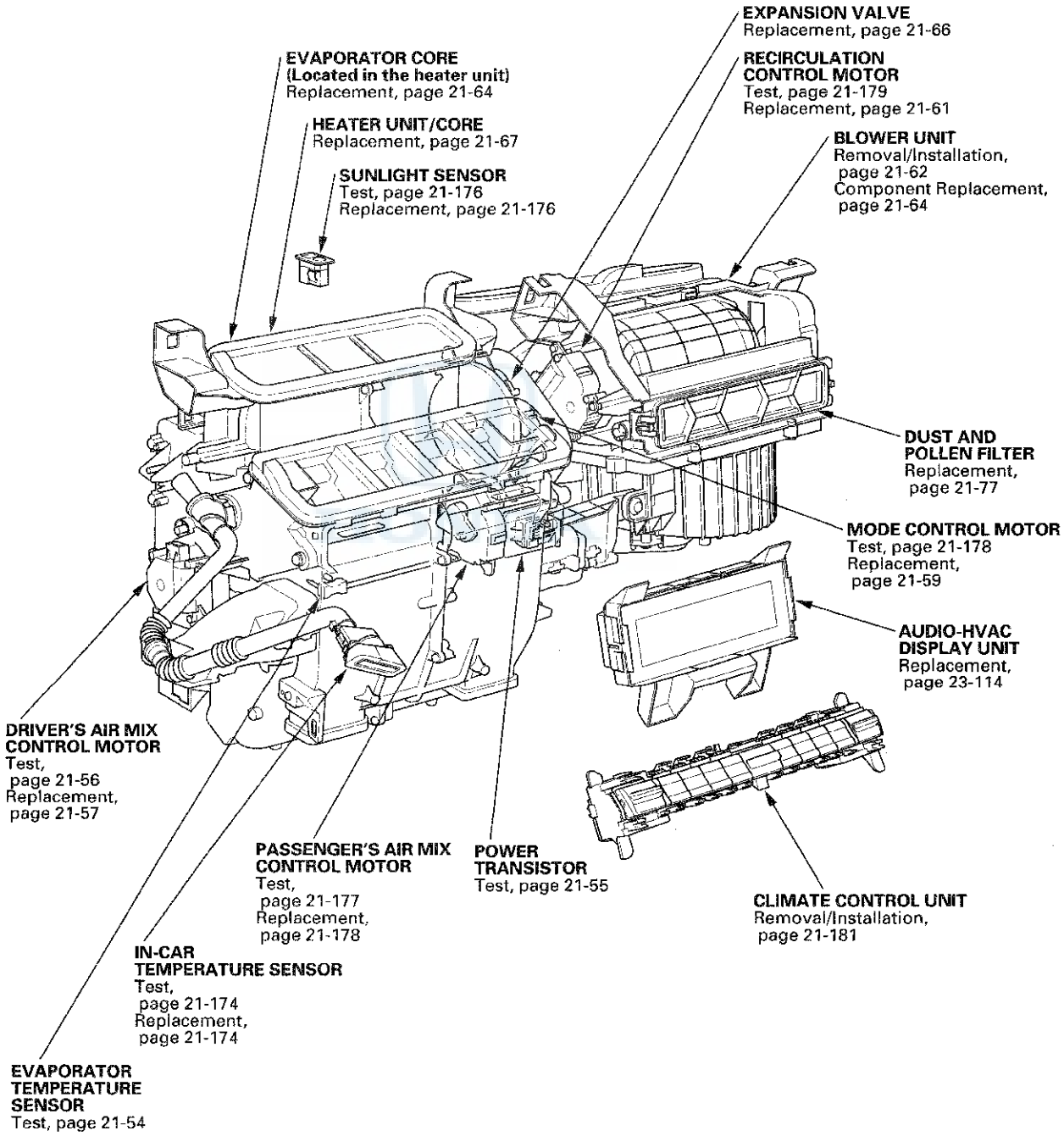

General Troubleshooting Information

How to Check for DTCs with the HDS

There are three methods used to check for DTCs. The recommended method is to use the Honda Diagnostic System (HDS) with the appropriate software, plugged into the data link connector (DLC).
The second method is to run the self-diagnostic function built into the climate control unit.
The third method is to use the B-CAN system diagnostic test mode A (see page 22-120).

1. Make sure the ignition switch to LOCK (0).

2. Connect the HDS to the data link connector (DLC) (A) located under the driver's side of the dashboard.

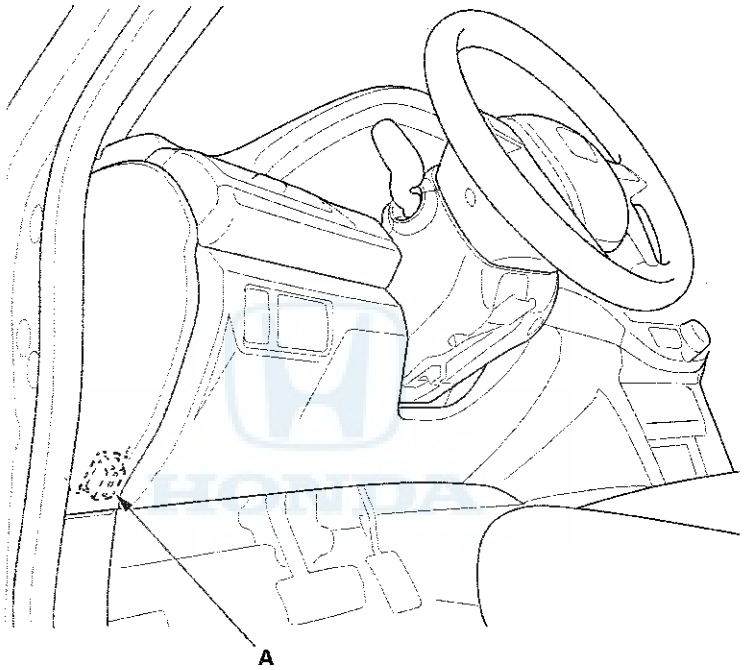

3. Turn the ignition switch to ON (II).

4. Make sure the HDS communicates with the vehicle and the climate control unit. If it doesn't, troubleshoot the DLC circuit (see page 11-192).

5. Select HVAC/CLIMATE CONTROL in the BODY ELECTRICAL menu.

6. Select DTCs in the HVAC/CLIMATE CONTROL menu.

7. Check for DTCs. If any DTCs are indicated, write down the DTCs, then go to the indicated DTC troubleshooting. If no DTCs are indicated, refer to symptom troubleshooting.

   NOTE:
   - After troubleshooting, clear the DTCs with the HDS.
   - For specific operations, refer to the user's manual that came with the HDS.

(cont'd)

General Troubleshooting Information (cont'd)

How to Use the Self-diagnostic Function with the HDS

1. Make sure the ignition switch to LOCK (0).
2. Connect the HDS to the data link connector (DLC).
3. Turn the ignition switch to ON (II).
4. Make sure the HDS communicates with the vehicle and the climate control unit. If it doesn't, troubleshoot the DLC circuit (see page 11-192).
5. Select HVAC/CLIMATE CONTROL in the BODY ELECTRICAL menu.
6. Select INSPECTION in the HVAC/CLIMATE CONTROL menu.
7. Select CLIMATE CONTROL SELF TEST in the INSPECTION menu.
8. Check for DTCs. If any DTCs are indicated, write down the DTCs, then go to the indicated DTC troubleshooting.

   NOTE:
   - After troubleshooting, clear the DTCs with the HDS.
   - For specific operations, refer to the user's manual that came with the HDS.

HONDA

How to Use the Self-diagnostic Function without the HDS

The climate control unit has a self-diagnostic function. To run the self-diagnostic function, do the following:

1. Turn the ignition switch to LOCK (0), and then to ON (II).

2. Press and hold the OFF button, then within 10 seconds press and release the REAR WINDOW DEFOGGER/ MIRROR DEFOGGER button five times. Release the OFF button; then the self-diagnostic begins.

   NOTE:
   - The blower motor will run at various speeds regardless of what the panel is displaying.
   - If there is a problem with the system, the temperature indicator flashes 88, and the A/C ON indicator or the AUTO indicator (or both) also flashes. Segments in the temperature indicator then indicate which DTCs are present.
   - If there is more than one DTC, they are displayed one at a time in sequence followed by a pause (all the display indicator segments illuminate) between the DTCs.
   - If there are no problems detected, the segments will not illuminate, and the system will appear to be turned off.

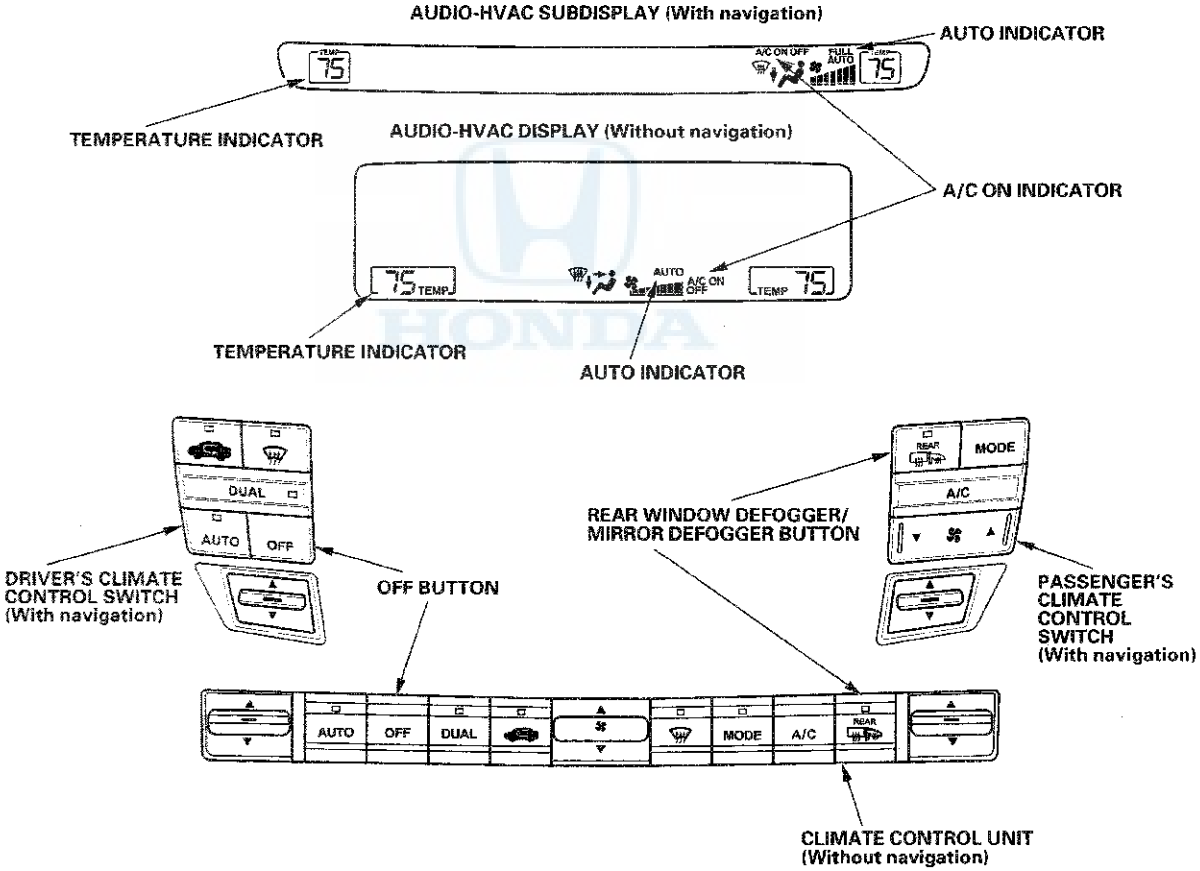

Canceling the Self-diagnostic Function

3. Turn the ignition switch to LOCK (0) to cancel the self-diagnostic function. After completing repair work, run the self-diagnostic function again to make sure that there are no other DTCs.

(cont'd)

General Troubleshooting Information (cont'd)

Checking for DTCs

The temperature display indicates single or multiple DTCs. If no DTCs are present, the indicator remains blank.

NOTE: If indicator segments A, C, D, E, G, K, and the AUTO indicator or the A/C ON indicator are on at the same time, there may be an open in the sensor common ground circuit or the climate control unit ground circuit.

DRIVER'S TEMPERATURE INDICATOR **AUTO INDICATOR** **A/C ON INDICATOR**

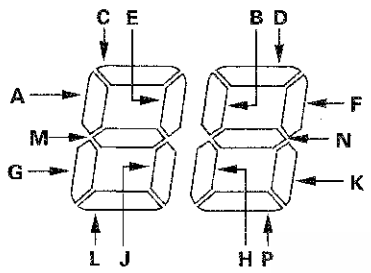

AUTO A/C ON

DTC (Driver's Temperature Indicator Segment, AUTO, and A/C Indicator)	Detection Item
A and AUTO	An open in the in-car temperature sensor circuit (see page 21-134)
B and AUTO	A short in the in-car temperature sensor circuit (see page 21-135)
C and AUTO	An open in the outside air temperature sensor circuit (see page 21-137)
D and AUTO	A short in the outside air temperature sensor circuit (see page 21-138)
E and AUTO	An open in the sunlight sensor circuit (see page 21-139)
F and AUTO	A short in the sunlight sensor circuit (see page 21-141)
G and AUTO	An open in the evaporator temperature sensor circuit (see page 21-142)
H and AUTO	A short in the evaporator temperature sensor circuit (see page 21-144)
A and A/C ON	An open in the driver's air mix control motor circuit (see page 21-145)
B and A/C ON	A short in the driver's air mix control motor circuit (see page 21-146)
C and A/C ON	A problem in the driver's air mix control linkage, door, or motor circuit (see page 21-149)
D and A/C ON	An open in the passenger's air mix control motor circuit (see page 21-150)
E and A/C ON	A short in the passenger's air mix control motor circuit (see page 21-152)
F and A/C ON	A problem in the passenger's air mix control linkage, door, or motor circuit (see page 21-155)
G and A/C ON	An open in the mode control motor circuit (see page 21-125)
H and A/C ON	A short in the mode control motor circuit (see page 21-127)
J and A/C ON	A problem in the mode control linkage, doors, or motor circuit (see page 21-122)
K and A/C ON	An open in the recirculation control motor circuit (see page 21-162)
L and A/C ON	A short in the recirculation control motor circuit (see page 21-130)
M and A/C ON	A problem in the recirculation control linkage, door, or motor circuit (see page 21-161)
N and A/C ON	A problem in the blower motor circuit (see page 21-157)

DTC (Driver's Temperature Indicator Segment)	Detection Item
A	Climate control unit internal error (see page 21-122)
B	Output shaft (countershaft) speed sensor signal error. Check for DTCs in the A/T system and go to the indicated DTC's troubleshooting. If no DTCs are found, replace the climate control unit (see page 21-180)
C	Engine coolant temperature (ECT) sensor signal error. Check for DTCs in the PGM-FI system and go to the indicated DTC's troubleshooting. If no DTCs are found, replace the climate control unit (see page 21-180)
D	Communication bus line error (bus-off) (see page 22-135)

Displaying Sensor Inputs at the Climate Control Unit

The climate control unit has a mode that displays sensor inputs it receives. This mode shows you what the climate control unit is receiving from each of the sensors, one at a time, and it can help you determine if a sensor is faulty.

Check these items before using the sensor input display mode

1. Turn the ignition switch to ON (II), and check the recirculation door function; press the recirculation button to switch from FRESH to RECIRC. The air volume and sound should change slightly.

2. Set the temperature using the driver's control switch to the desired test temperature:

   - Press AUTO button on, the LED turns on.
   - Press DUAL button off, the LED turns off.

   When selecting the test temperature, note these items:

   - "Lo" temperature setting will default to MAX COOL, VENT, and RECIRC.
   - "Hi" temperature setting will default to MAX HOT, FLOOR, and FRESH.
   - 58 through 86 °F settings will use the automatic climate control logic.

3. Turn the ignition switch to LOCK (0).

(cont'd)

General Troubleshooting Information (cont'd)

To run the sensor input display mode, follow these steps

1. Turn the ignition switch to LOCK (0).

2. Press and hold both the AUTO and RECIRCULATION CONTROL buttons, then start the engine.

3. After the engine starts, release both buttons. The display panel control unit will flash the sensor number, and then the value for that sensor. Record the value displayed.

4. To advance to the next sensor, press the REAR WINDOW DEFOGGER button.

Sensor	Item	Displayed Value
1	Mode Positioning	%
2	In-car Temperature	℃
3	Outside Air Temperature	℃
4	Solar Radiation Sensor Value: Dark = 00, Flashlight = 04, Cloudy = 10, Sunny = 65	10 kcal/m²·h
5	Evaporator Outlet Air Temperature	℃
6	Driver's Air Mix Opening (Low value indicates cooler air distribution, higher value indicates warmer air distribution)	% of opening
7	Passenger's Air Mix Opening (Low value indicates cooler air distribution, higher value indicates warmer air distribution)	% of opening
8	Recirculation Control Opening	% of opening
9	Vehicle Speed (Vehicle must be driven to display speed)	10 km/h
A	Engine Coolant Temperature	℃
b	Vent Temperature Air Out (TAO)	℃

NOTE:
- The sensor values will be displayed in degrees Celsius (℃) or an alphanumeric code. Use the chart to convert the value to degrees Fahrenheit (℉).
- If the sensor value displays "Er" this indicates there is an open or short in the circuit or sensor. Check for DTCs using the HDS, or use the climate control self-diagnostic function (see page 21-101).
- If necessary, compare the sensor input display to a known-good vehicle under the same test conditions.
- If the sensor is out of the normal range, refer to the sensor test or substitute a known-good sensor, and recheck.

5. To cancel the sensor input display mode, press the AUTO button or turn the ignition switch to LOCK (0).

Celsius to Fahrenheit Conversion Table

℃	℉	℃	℉	℃	℉	℃	℉	℃	℉
0	32	10	50	20	68	30	86	40	104
1	34	11	52	21	70	31	88	41	106
2	36	12	54	22	72	32	90	42	108
3	37	13	55	23	73	33	91	43	109
4	39	14	57	24	75	34	93	44	111
5	41	15	59	25	77	35	95	45	113
6	43	16	61	26	79	36	97	46	115
7	45	17	63	27	81	37	99	47	117
8	46	18	64	28	82	38	100	48	118
9	48	19	66	29	84	39	102	49	120

℃	℉	℃	℉	℃	℉	℃	℉	℃	℉
50	122	60	140	70	158	80	176	90	194
51	124	61	142	71	160	81	178	91	196
52	126	62	144	72	162	82	180	92	198
53	127	63	145	73	163	83	181	93	199
54	128	64	147	74	165	84	183	94	201
55	131	65	149	75	167	85	185	95	203
56	133	66	151	76	169	86	187	96	205
57	135	67	152	77	170	87	188	97	207
58	136	68	154	78	172	88	190	98	208
59	139	69	158	79	174	89	192	99	210

Alphanumeric Conversion Table

Display Reading (Alphanumeric)	℃	℉	%
A1 thru A9	−1 thru −9	30 thru 16	−1 thru −9
B0 thru B9	−10 thru −19	14 thru −2	−10 thru −19
C0 thru C9	−20 thru −29	−4 thru −20	−20 thru −29
D0 thru D9	−30 thru −39	−22 thru −38	−30 thru −39
E0 thru E9	−40 thru −49	−40 thru −58	−40 thru −49
F0 thru F9	−50 thru −59	−58 thru −74	+100 thru +109

Alphanumeric Conversion Table (Mode Positioning)

Display Reading (Alphanumeric)	Mode Position
0	VENT
20	HEAT/VENT-1
40	HEAT/VENT-2
60	HEAT
80	HEAT/DEF
F0	DEF

DTC Troubleshooting Index

Checking the DTCs by HDS

DTC	Detection Item or Symptom	ECU	DTC type	Page
U1280	Communication bus line error (bus-off)	Climate control unit	Loss of communication	(see page 22-135)
U0155	Climate control unit lost communication with gauge control module	Climate control unit	Loss of communication	(see page 21-124)
B121A	An open in the mode control motor circuit	Climate control unit	Signal error	(see page 21-125)
B121B	A short in the mode control motor circuit	Climate control unit	Signal error	(see page 21-127)
B1220	A short in the recirculation control motor circuit	Climate control unit	Signal error	(see page 21-130)
B1225	An open in the in-car temperature sensor circuit	Climate control unit	Signal error	(see page 21-134)
B1226	A short in the in-car temperature sensor circuit	Climate control unit	Signal error	(see page 21-135)
B1227	An open in the outside air temperature sensor circuit	Climate control unit	Signal error	(see page 21-137)
B1228	A short in the outside air temperature sensor circuit	Climate control unit	Signal error	(see page 21-138)
B1229	An open in the sunlight sensor circuit	Climate control unit	Signal error	(see page 21-139)
B1230	A short in the sunlight sensor circuit	Climate control unit	Signal error	(see page 21-141)
B1231	An open in the evaporator temperature sensor circuit	Climate control unit	Signal error	(see page 21-142)
B1232	A short in the evaporator temperature sensor circuit	Climate control unit	Signal error	(see page 21-144)
B1233	An open in the driver's air mix control motor circuit	Climate control unit	Signal error	(see page 21-145)
B1234	A short in the driver's air mix control motor circuit	Climate control unit	Signal error	(see page 21-146)
B1235	A problem in the driver's air mix control linkage, door, or motor circuit	Climate control unit	Signal error	(see page 21-149)
B1236	An open in the passenger's air mix control motor circuit	Climate control unit	Signal error	(see page 21-150)
B1237	A short in the passenger's air mix control motor circuit	Climate control unit	Signal error	(see page 21-152)
B1238	A problem in the passenger's air mix control linkage, door, or motor circuit	Climate control unit	Signal error	(see page 21-155)
B1241	A problem in the blower motor circuit	Climate control unit	Signal error	(see page 21-157)
B2983	A problem in the recirculation control linkage, door, or motor circuit	Climate control unit	Signal error	(see page 21-161)
B2986	An open in the recirculation control motor circuit	Climate control unit	Signal error	(see page 21-162)

Symptom Troubleshooting Index

Symptom	Diagnostic procedure	Also check for
The blower and heater controls and the A/C system do not work	• Probable cause: Climate control unit malfunction • Do the climate control power and ground circuit troubleshooting (see page 21-164)	• HVAC DTCs (see page 21-99) • Blown fuse No. 16 (7.5 A) in the driver's under-dash fuse/relay box • Poor ground at G401 (with navigation and premium audio: see page 22-40, with premium audio: see page 22-42, without premium audio: see page 22-44) • Poor or loose connections at the terminals
The A/C compressor clutch and the A/C condenser/radiator fans are inoperative, but the blower and heater controls work	• Probable cause: A/C pressure switch circuit malfunction • A/C pressure switch circuit troubleshooting (see page 21-172)	• HVAC DTCs (see page 21-99) • Powertrain DTCs (see page 11-3) • Poor or loose connections at the terminals
The A/C compressor clutch does not engage, but the A/C condenser/ radiator fans operate, and the blower and heater controls work	• Probable cause: No power to the A/C compressor clutch • Do the A/C compressor clutch circuit troubleshooting (see page 21-49)	• HVAC DTCs (see page 21-99) • Blown fuse No. 20 (7.5 A) in the under-dash fuse/relay box • A/C system pressure is normal (see page 21-88) • Poor or loose connections at the terminals
The A/C condenser fan is inoperative, but the radiator fan runs with the A/C on. The blower and heater controls work normally	• Probable cause: A/C condenser fan circuit malfunction • Do the A/C condenser fan circuit troubleshooting (see page 21-47)	• HVAC DTCs (see page 21-99) • Powertrain DTCs (see page 11-3) • Blown fuse No. 20 (7.5 A) in the under-hood fuse/relay box • Poor ground at G302 (see page 22-30) • Poor or loose connections at the terminals
The A/C condenser and radiator fans are inoperative with the A/C on. The blower and heater controls work normally	• Probable cause: Radiator/A/C condenser fan common circuit malfunction • Do the radiator and A/C condenser fan common circuit troubleshooting (see page 21-48)	• HVAC DTCs (see page 21-99) • Powertrain DTCs (see page 11-3) • Blown fuse No. 5 (20A) and No. 3-6 (MAIN FAN MTR) (30 A) in the under-hood fuse/relay box • Poor ground at G302 (see page 22-30) • Poor or loose connections at the terminals
Voice commands do not work	• Probable cause: Communication problem between the climate control unit and the navigation system • Do the navigation communication line circuit troubleshooting (see page 21-165)	• HVAC DTCs (see page 21-99) • Navi system link (see page 23-170) • Poor or loose connections at the terminals
Blower fan runs slower than expected in cold weather (when in AUTO mode)	• Probable cause: Engine coolant temperature (ECT) circuit malfunction • Troubleshoot the ECT sensor circuit: – ECT sensor 2 circuit low voltage (see page 11-164) – ECT sensor 2 circuit high voltage (see page 11-165)	• HVAC DTCs (see page 21-99) • Powertrain DTCs (see page 11-3) • Blower motor operation

(cont'd)

Symptom Troubleshooting Index (cont'd)

Symptom	Diagnostic procedure	Also check for
The A/C compressor clutch cycles rapidly on and off	• Probable cause: The A/C system is very low on refrigerant, indicating a possible leak • Do the refrigerant leak check (see page 21-81) and repair any leaks. Replace the receiver/dryer (see page 21-76), then recharge the system to specifications (see page 21-80)	• HVAC DTCs (see page 21-99) • If there is no leak and the refrigerant level is normal, do the A/C compressor clutch circuit troubleshooting (see page 21-49), and look for an intermittent problem.
Warm air comes out of the vents, and the high pressure liquid line is very hot	• Probable cause: The A/C system is overcharged (too much refrigerant), or the A/C condenser is malfunctioning • Recover A/C refrigerant (see page 21-78), then check the condenser for restrictions or poor airflow. Repair as needed. Recharge the system to specifications (see page 21-80)	• Incorrect tension or abnormal wear on the drive belt. Replace the belt and/or the belt tensioner as needed. • Proper operation of the A/C condenser/radiator fans. Repair as needed. • Signs of an overheated engine. Repair as needed.
Warm air comes out of the vents. The suction line is cool to warm, and the discharge line is warm to hot	• Probable cause: The A/C system is low on refrigerant, indicating a possible leak • Do the refrigerant leak check (see page 21-81) and repair any leaks. Recharge the system to specifications (see page 21-80)	• HVAC DTCs (see page 21-99) • Add refrigerant oil depending on the part you replaced (see page 21-6)
Warm air comes out of the vents. The suction line is cool to warm, the discharge line is warm to hot, and there is no frost on the expansion valve	• Probable cause: Excessive air and/or moisture in the system, indicating a possible leak • Do the refrigerant leak check (see page 21-81) and repair any leaks. Replace the receiver/dryer (see page 21-76), then recharge the system to specifications (see page 21-80)	• HVAC DTCs (see page 21-99) • Check the amount of refrigerant oil in the system. Adjust the oil level as needed.
Warm air comes out of the vents. The liquid line or the condenser outlet is abnormally cool, or there is frost or condensation on the receiver/dryer	• Probable cause: A restriction in the high-pressure side of the system • Recover A/C refrigerant (see page 21-78), then check the liquid line, the receiver/dryer, and the A/C condenser for restrictions. Repair as needed. Recharge the system to specifications (see page 21-80)	HVAC DTCs (see page 21-99)
There is heavy frost or condensation on the expansion valve, and frost on the suction line	• Probable cause: A restriction in the low-pressure side of the system • Recover A/C refrigerant (see page 21-78), then check the suction line and the expansion valve for restrictions. Repair as needed. Recharge the system to specifications (see page 21-80)	HVAC DTCs (see page 21-99)

Symptom	Diagnostic procedure	Also check for
Warm air comes out of the vents, and there is frost on the expansion valve	• Probable cause: The expansion valve is stuck closed • Replace the expansion valve (see page 21-66)	• HVAC DTCs (see page 21-99) • Check the old expansion valve for contamination. If contaminants are found, replace the A/C system component that caused the contamination.
The temperature of the liquid line is the same on both sides of the expansion valve, and the evaporator coil or suction line has heavy condensation	• Probable cause: The expansion valve is stuck open • Replace the expansion valve (see page 21-66)	• HVAC DTCs (see page 21-99) • Check the old expansion valve for contamination. If contaminants are found, replace the A/C system component that caused the contamination.
Warm air comes out of the vents, but operation is normal otherwise	• Probable cause: A/C compressor failure • Do the A/C system test (see page 21-88), and correct any problems. If necessary, replace the A/C compressor (see page 21-69)	• HVAC DTCs (see page 21-99) • Add refrigerant oil depending on the part you replaced (see page 21-6)
Driver's and passenger's side vent temperatures vary by more than 20 °F (11 °C)	• Probable causes: The recirculation control door or the air mix door is malfunctioning • Do the following troubleshooting: – Recirculation control motor test (see page 21-179) – Driver's air mix control motor test (see page 21-56) – Passenger's air mix control motor test (see page 21-177)	• HVAC DTCs (see page 21-99) • Poor or loose connections at the terminals
HDS does not communicate with the climate control unit or the vehicle	Troubleshoot the DLC circuit (see page 11-192)	
Insufficient heating	1. Check the coolant level (see page 10-6) 2. Check the radiator cap (see page 10-3) 3. Check the coolant temperature during normal operation 4. Check the heater core inlet hose temperature: • If it is COLD, check for restrictions in the hose, a damaged or leaking thermostat, or a damaged or leaking water pump • If it is HOT, check for restrictions in the heater core. Back flush or replace the heater core 5. Do the driver's air mix control motor test (see page 21-56) and passenger's air mix control motor test (see page 21-177) 6. Check the blower motor unit for obstructions 7. Check for air leaks around the ducts and vents	• HVAC DTCs (see page 21-99) • Damaged cylinder head gasket

System Description

The air conditioning (A/C) system removes heat from the passenger compartment by transferring heat from the ambient air to the evaporator. The A/C system refrigerant expands in the evaporator, and the evaporator becomes very cold and absorbs the heat from the ambient air. The blower fan pushes air across the evaporator where the heat is absorbed, and then it blows the cool air into the passenger compartment.

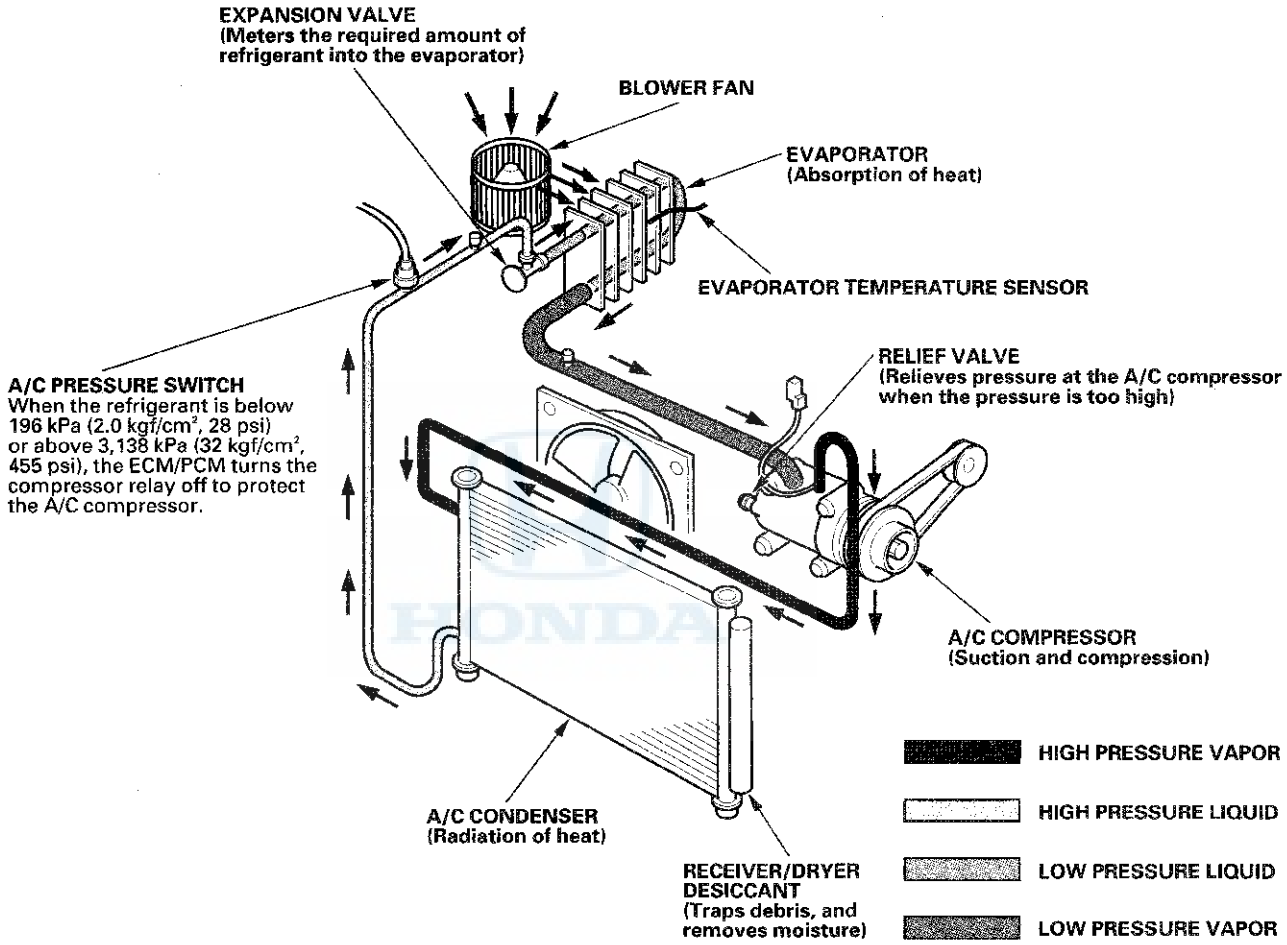

This vehicle uses HFC-134a (R-134a) refrigerant, which does not contain chlorofluorocarbons. Pay attention to the following service items:

- Do not mix refrigerants CFC-12 (R-12) and HFC-134a (R-134a). They are not compatible.
- Use only the recommended polyalkyleneglycol (PAG) refrigerant oil (DENSO ND-01L8) designed for the R-134a A/C compressor. Intermixing the recommended (PAG) refrigerant oil with any other refrigerant oil will result in A/C compressor failure.
- All A/C system parts (A/C compressor, discharge line, suction line, evaporator, A/C condenser, receiver/dryer, expansion valve, O-rings for joints) are designed for refrigerant R-134a. Do not exchange with R-12 parts.
- Use a halogen gas leak detector designed for refrigerant R-134a.
- R-12 and R-134a refrigerant servicing equipment are not interchangeable. Use only a recovery/recycling/charging station that is U.L.-listed and is certified to meet the requirements of SAE J2210 to service the R-134a air conditioning systems.
- Always recover refrigerant R-134a with an approved recovery/recycling/charging station before disconnecting any A/C fitting.

Climate Control Door Positions

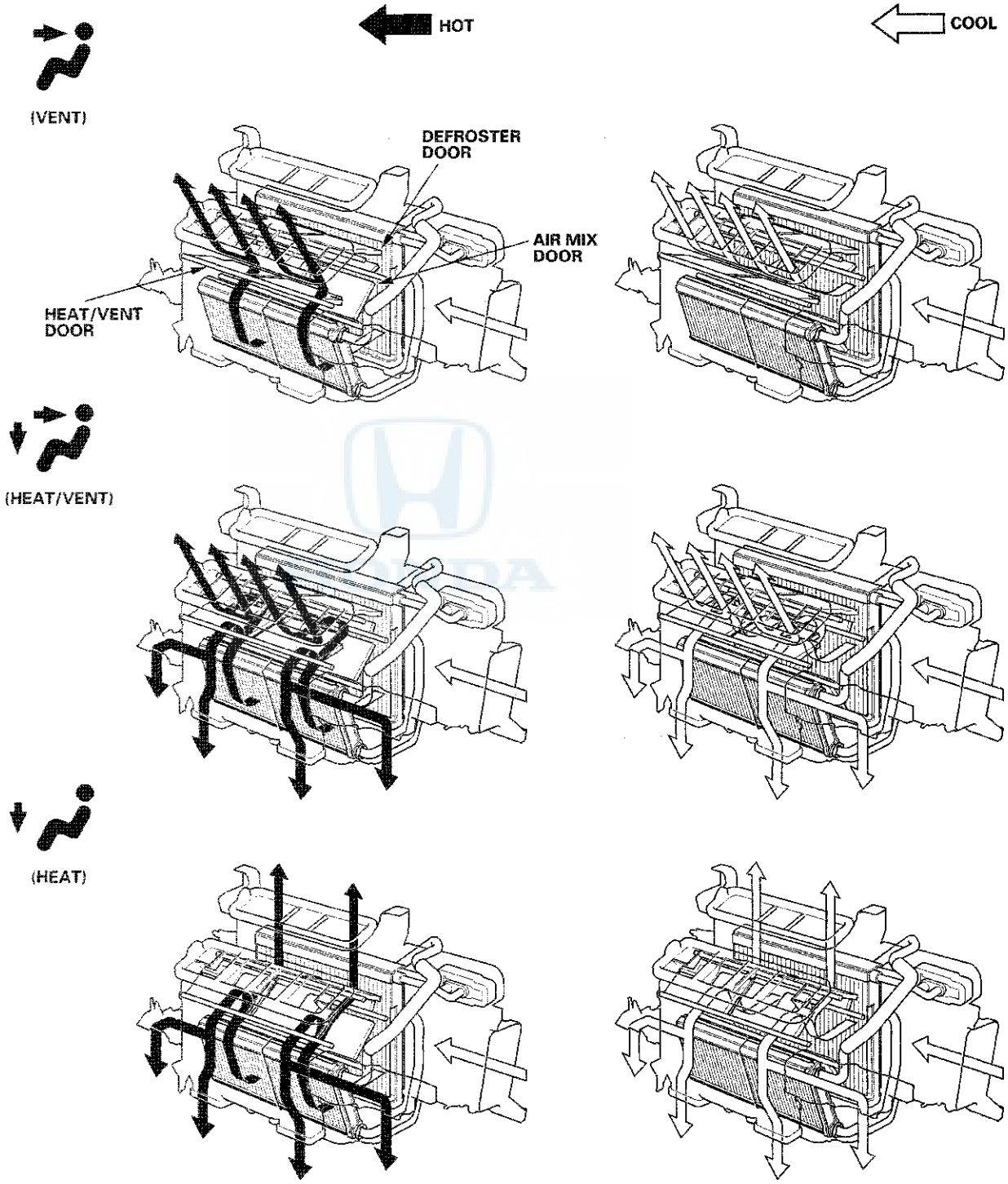

(cont'd)

System Description (cont'd)

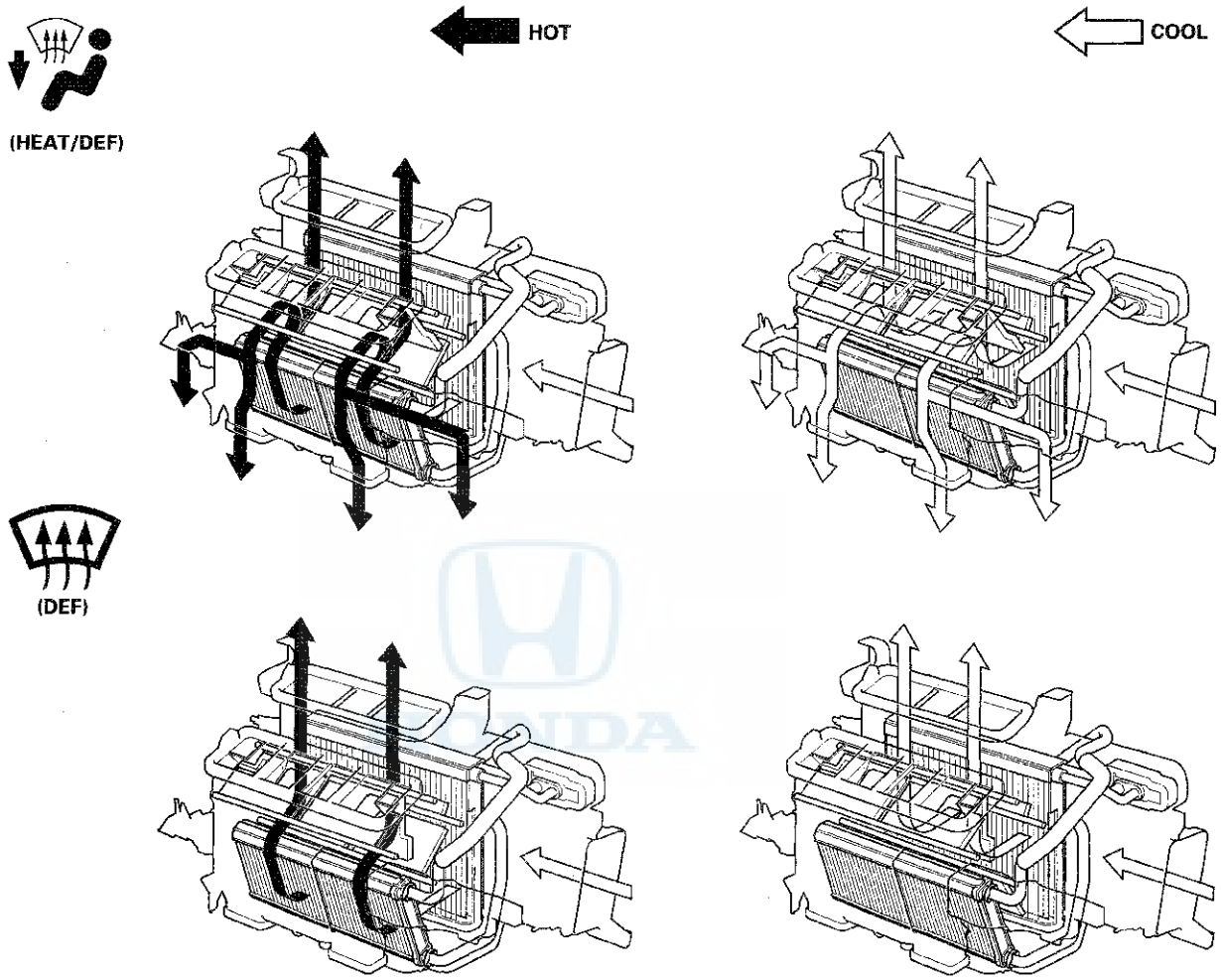

Dual Air Mix Control System

Driver's side: HOT
Passenger's side: COOL

Driver's side: COOL
Passenger's side: HOT

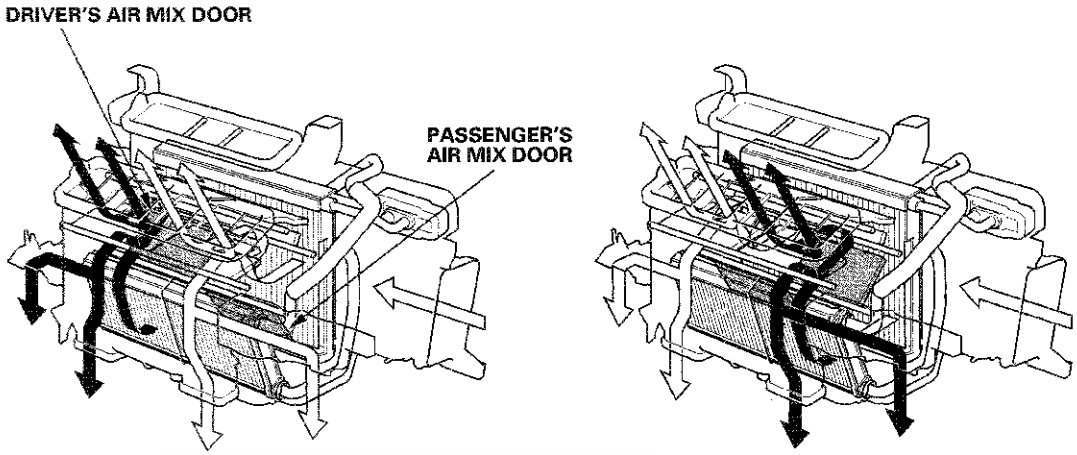

HONDA

(cont'd)

System Description (cont'd)

i-Dual Zone Climate Control System

This system automatically controls the temperature and the vent mode of the air direction to the driver and passenger's side depending on the angle of the sun and the direction of the vehicle. It calculates information such as date, time, longitude, and latitude from the navigation system, as well as the radiative strength of the sun from the sunlight sensor, to determine the appropriate mode position and temperature to be directed to each side.

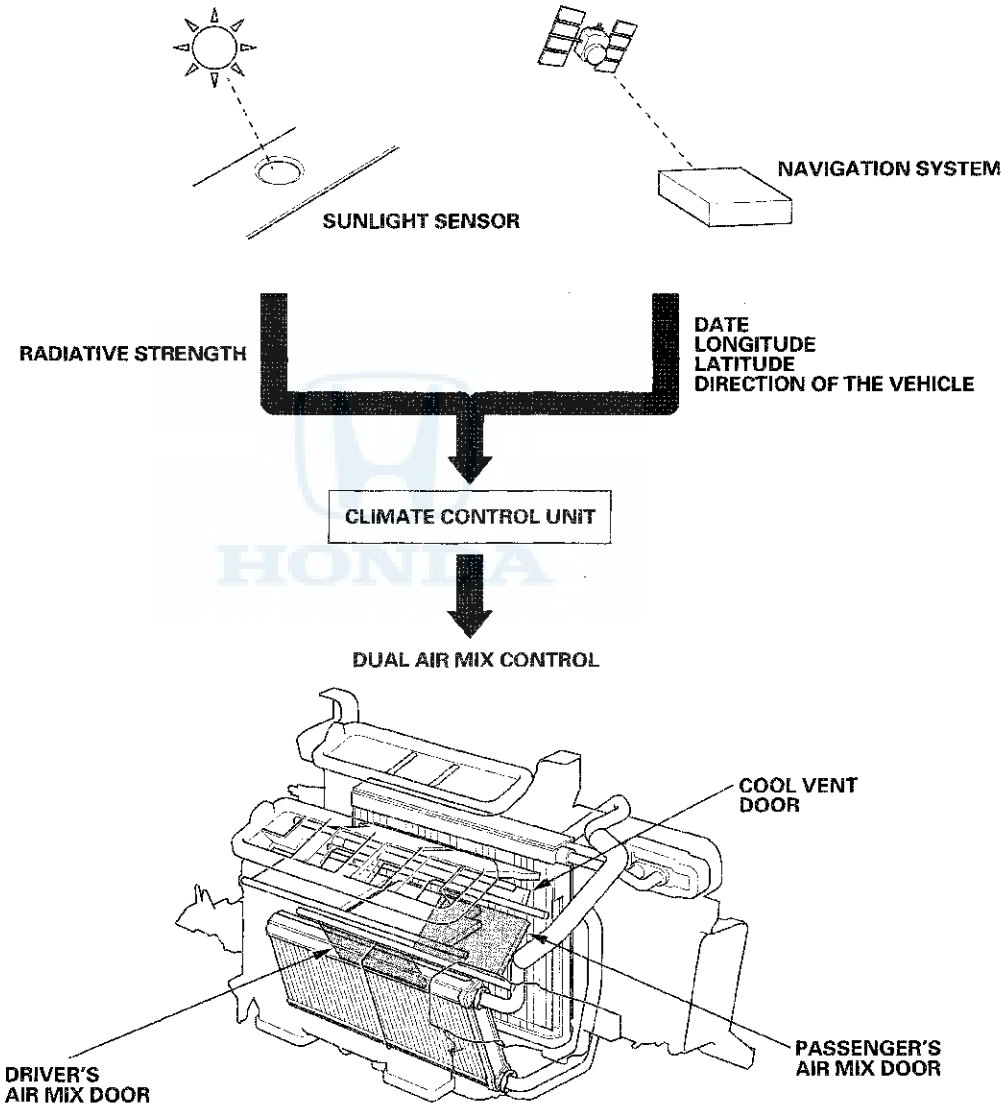

In the event that the navigation system malfunctions, or when driving in areas where the navigation cannot determine the vehicle position (non-coverage areas, tunnels, etc.), the climate control system will operate the same as a vehicle without navigation.

Climate Control Unit Inputs and Outputs

CLIMATE CONTROL UNIT CONNECTOR A (28P)

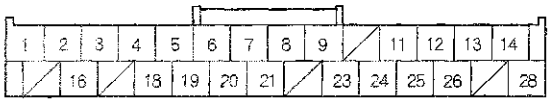

Wire side of female terminals

Cavity	Wire color	Terminal name	Description	Signal
1	LT GRN	M-HOT AS	Drives passenger's air mix control motor to HOT	With ignition switch ON (II) and passenger's air mix control motor moving to HOT: battery voltage
2	BRN*1 WHT*2	M-COOL AS	Drives passenger's air mix control motor to COOL	With ignition switch ON (II) and passenger's air mix control motor moving to COOL: battery voltage
3	RED*1 PUR*2	M-FRS	Drives recirculation control motor to FRESH	With ignition switch ON (II) and recirculation control motor moving to FRESH: battery voltage
4	LT BLU	M-COOL DR	Drives driver's air mix control motor to COOL	With ignition switch ON (II) and driver's air mix control motor moving to COOL: battery voltage
5	PUR*1 ORN*2	M-REC	Drives recirculation control motor to RECIRCULATE	With ignition switch ON (II) and recirculation control motor moving to RECIRCULATE: battery voltage
6	PNK	M-HOT DR	Drives driver's air mix control motor to HOT	With ignition switch ON (II) and driver's air mix control motor moving to COOL: battery voltage
7	YEL*1 WHT*2	M-VENT	Drives mode control motor to VENT	With ignition switch ON (II) and mode control motor to VENT: battery voltage
8	GRY*1 GRN*2	M-DEF	Drives mode control motor to DEF	With ignition switch ON (II) and mode control motor moving to DEF: battery voltage
9	RED*1 LT GRN*2	IG2	IG2 power source	With ignition switch ON (II): battery voltage
11	RED*1 LT GRN*2	MDD-P	Detects mode control motor position	With ignition switch ON (II): about 0.5 – 4.5 V (depending on mode control motor position)
12	BLU*1 PNK*2	RFD-P	Detects recirculation control motor position	With ignition switch ON (II): about 0.5 – 4.5 V (depending on recirculation control motor position)

* 1: With navigation
* 2: Without navigation

(cont'd)

System Description (cont'd)

Climate Control Unit Inputs and Outputs (cont'd)

CLIMATE CONTROL UNIT CONNECTOR A (28P)

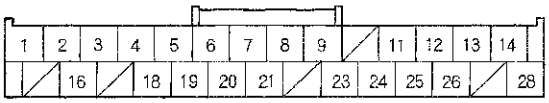

Wire side of female terminals

Cavity	Wire color	Terminal name	Description	Signal
13	LT BLU*1 YEL*2	AMD-P AS	Detects passenger's air mix control motor position	With ignition switch ON (II) and passenger's air mix door at HOT: about 4.5 V With ignition switch ON (II) and passenger's air mix door at COOL: about 0.5 V
14	GRY	AMD-P DR	Detects driver's air mix control motor position	With ignition switch ON (II) and driver's air mix door at HOT: about 4.5 V With ignition switch ON (II) and driver's air mix door at COOL: about 0.5 V
16	RED	ILL — BULB	Detects illumination control signal	With combination light switch ON: voltage varies as dash lights brightness varies
18	GRY	SMALL	Inputs voltage for illumination	With combination light switch ON: battery voltage
19	LT BLU*1 RED*2	DISP CLK	Communication signal from subdisplay	With ignition switch ON (II) pulses (about 2.5 V)
20	BLU*1 PUR*2	DISP SI	Communication signal to subdisplay potentiometer signal	With ignition switch ON (II): pulses (about 2.5 V)
21	PUR*1 LT BLU*2	ACS	Outputs A/C on/off signal	With ignition switch ON (II), A/C pressure switch closed, and A/C request OFF: battery voltage. When A/C request switches ON, voltage changes to about 0 V.
23	BRN	Teva	Detects evaporator temperature sensor signal	With ignition switch ON (II) and air mix door at HOT: about 4.5 V With ignition switch ON (II) and air mix door at COOL: about 0.5 V
24	LT GRN*1 BLU*2	TAM	Detects outside air temperature sensor signal	With ignition switch ON (II): about 1.0--4.0 V (depending on outside air temperature)
25	YEL*1 PUR*2	TSUN	Detects sunlight sensor signal	With ignition switch ON (II) and sensor out of direct sunlight 3.6–3.7 V or more With ignition switch ON (II) and sensor in direct sunlight: 3.3–3.5 V or less
26	BLK*1 WHT*2	TR	Detects in-car temperature sensor signal	With ignition switch ON (II): about 1.0–4.0 V (depending on in-car temperature)
28*1	GRN	BUS DATA	Communication signal to driver's climate control switch	With ignition switch ON (II): pulses (about 2.5 V)

* 1: With navigation
* 2: Without navigation

Climate Control Unit Inputs and Outputs (cont'd)

CLIMATE CONTROL UNIT CONNECTOR B (12P)

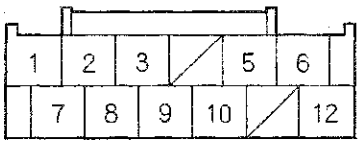

Wire side of female terminals

Cavity	Wire color	Terminal name	Description	Signal
1	WHT*1 PNK*2	B-CAN HI	B-CAN communication signal	With ignition switch ON (II): pulses (about 2.5 V)
2	RED*1 BLU*2	B-CAN LO	B-CAN communication signal	With ignition switch ON (II): pulses (about 2.5 V)
3	BLK	GND	Ground for climate control unit (G401)	Less than 0.5 V at all times
5	PUR*1 YEL*2	BLW-G	Outputs power transistor gate voltage	With ignition switch ON (II): and blower OFF: 0 V. Voltage increases as blower speed increases
6	BLU	BLW-V	Feedback signal of power transistor drain voltage	With ignition switch ON (II) and bblower OFF: between 5 V and 12 V. Voltage decreases as blower speed increases
7	BRN	NAVI SO	Communication signal from navigation	With ignition switch ON (II): pulses (about 2.5 V)
8	LT GRN	NAVI SI	Communication signal to navigation	With ignition switch ON (II): pulses (about 2.5 V)
9	RED	NAVI CLK	Communication signal from navigation	With ignition switch ON (II): pulses (about 2.5 V)
10	WHT*1 RED*2	SENS-COM	Sensor ground	Less than 0.5 V at all times
12	BLK	S5V	Outputs sensor 5 V	With ignition switch ON (II): about 5.0 V

* 1: With navigation
* 2: Without navigation

Circuit Diagram

With Navigation

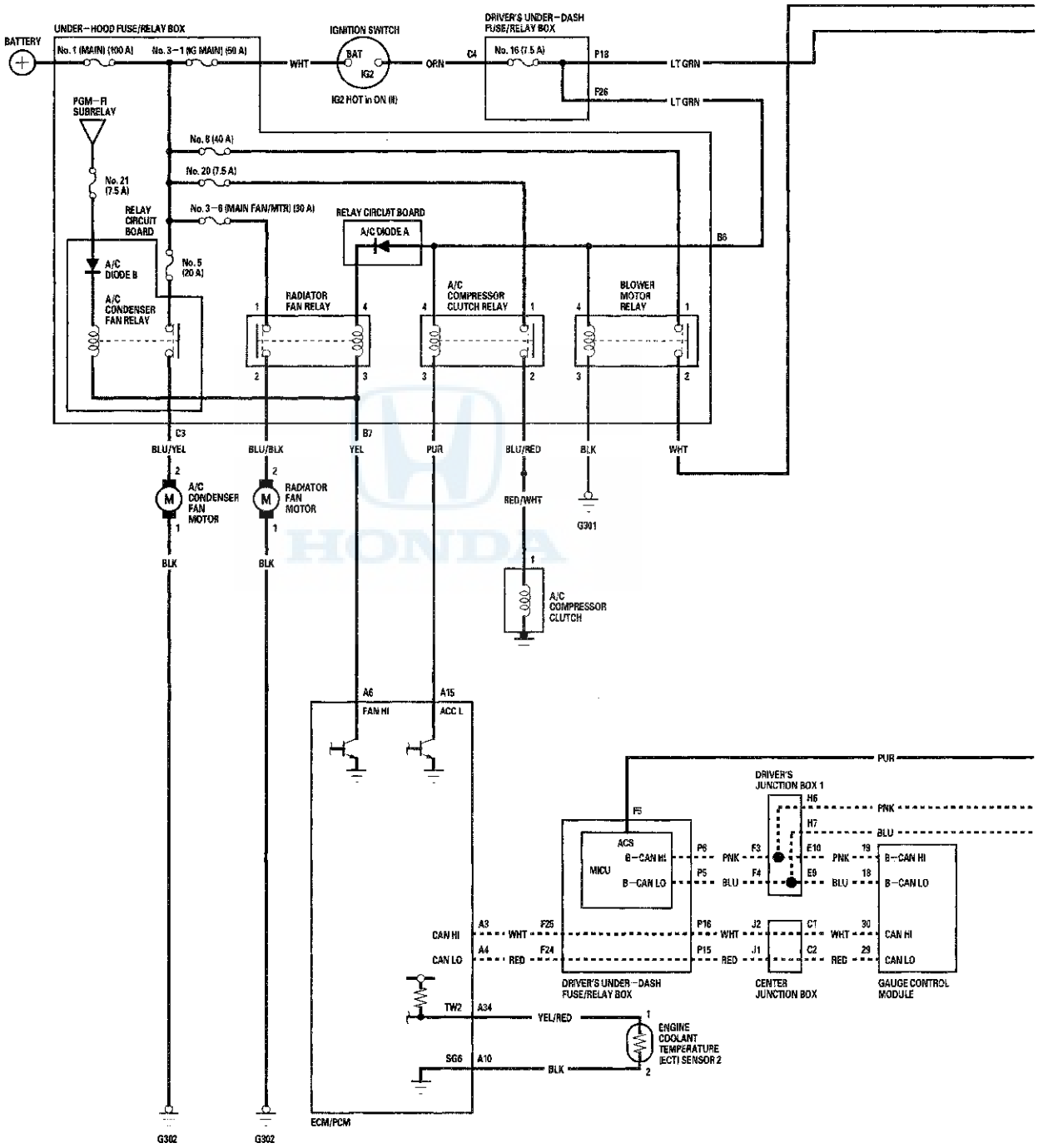

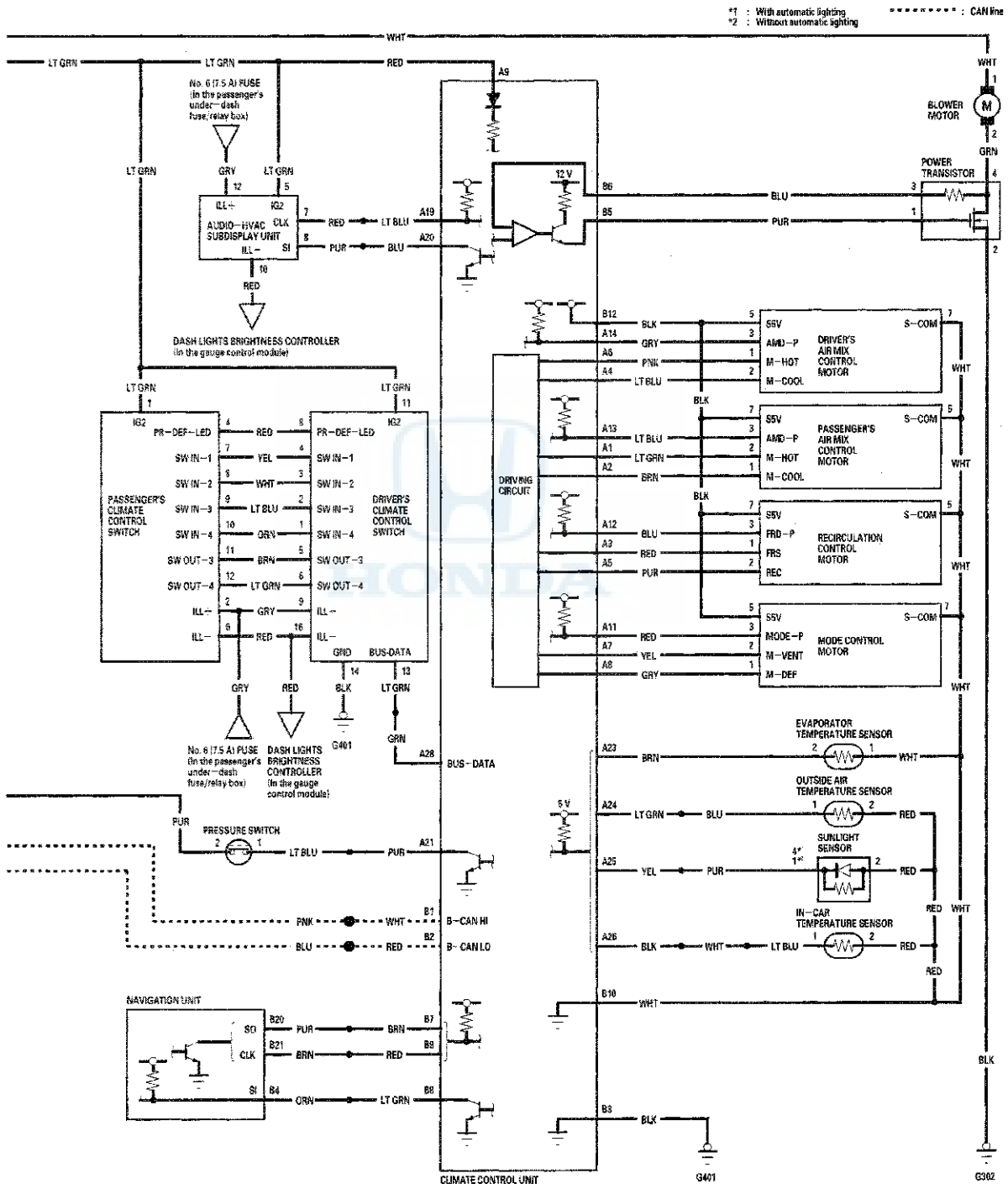
*1 : With automatic lighting
*2 : Without automatic lighting
: CAN line
WHT
LT GRN
RED
No. 6 (7.5 A) FUSE (in the passenger's under-dash fuse/relay box)
GRY
AUDIO-HVAC SUBDISPLAY UNIT
ILL+
IG2
CLK
ILL-
SI
LT BLU
PUR
BLU
A19
A20
A9
12 V
DASH LIGHTS BRIGHTNESS CONTROLLER (in the gauge control module)
PASSENGER'S CLIMATE CONTROL SWITCH
DRIVER'S CLIMATE CONTROL SWITCH
PR-DEF-LED
SW IN-1
SW IN-2
SW IN-3
SW IN-4
SW OUT-3
SW OUT-4
YEL
WHT
ORN
BRN
GND
BUS-DATA
BLK
G401
GRN
A28
BUS-DATA
DRIVING CIRCUIT
BLOWER MOTOR
M
POWER TRANSISTOR
B6
B5
S5V
AMB-P
M-HOT
M-COOL
S-COM
DRIVER'S AIR MIX CONTROL MOTOR
PASSENGER'S AIR MIX CONTROL MOTOR
FRD-P
FRS
REC
RECIRCULATION CONTROL MOTOR
MODE-P
M-VENT
M-DEF
MODE CONTROL MOTOR
PNK
GRY
A14
A6
A4
A13
A1
A2
A12
A3
A5
A11
A7
A8
A23
A24
A25
A26
B10
B3
EVAPORATOR TEMPERATURE SENSOR
OUTSIDE AIR TEMPERATURE SENSOR
SUNLIGHT SENSOR
IN-CAR TEMPERATURE SENSOR
5 V
PRESSURE SWITCH
A21
B1
B2
B-CAN HI
B-CAN LO
NAVIGATION UNIT
SO
CLK
SI
B20
B21
B4
B7
B8
B9
CLIMATE CONTROL UNIT
G302

Circuit Diagram (cont'd)

Without Navigation

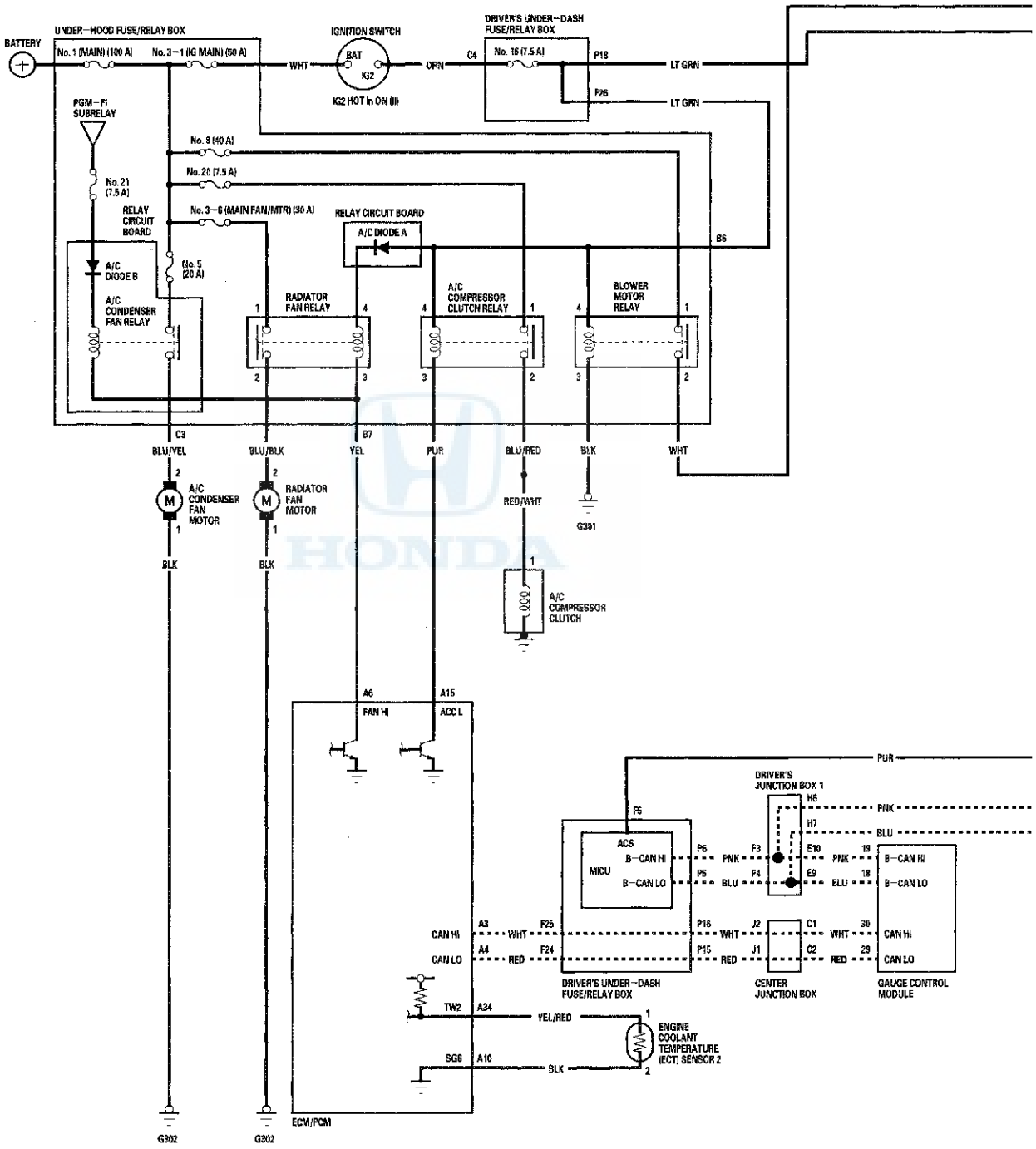

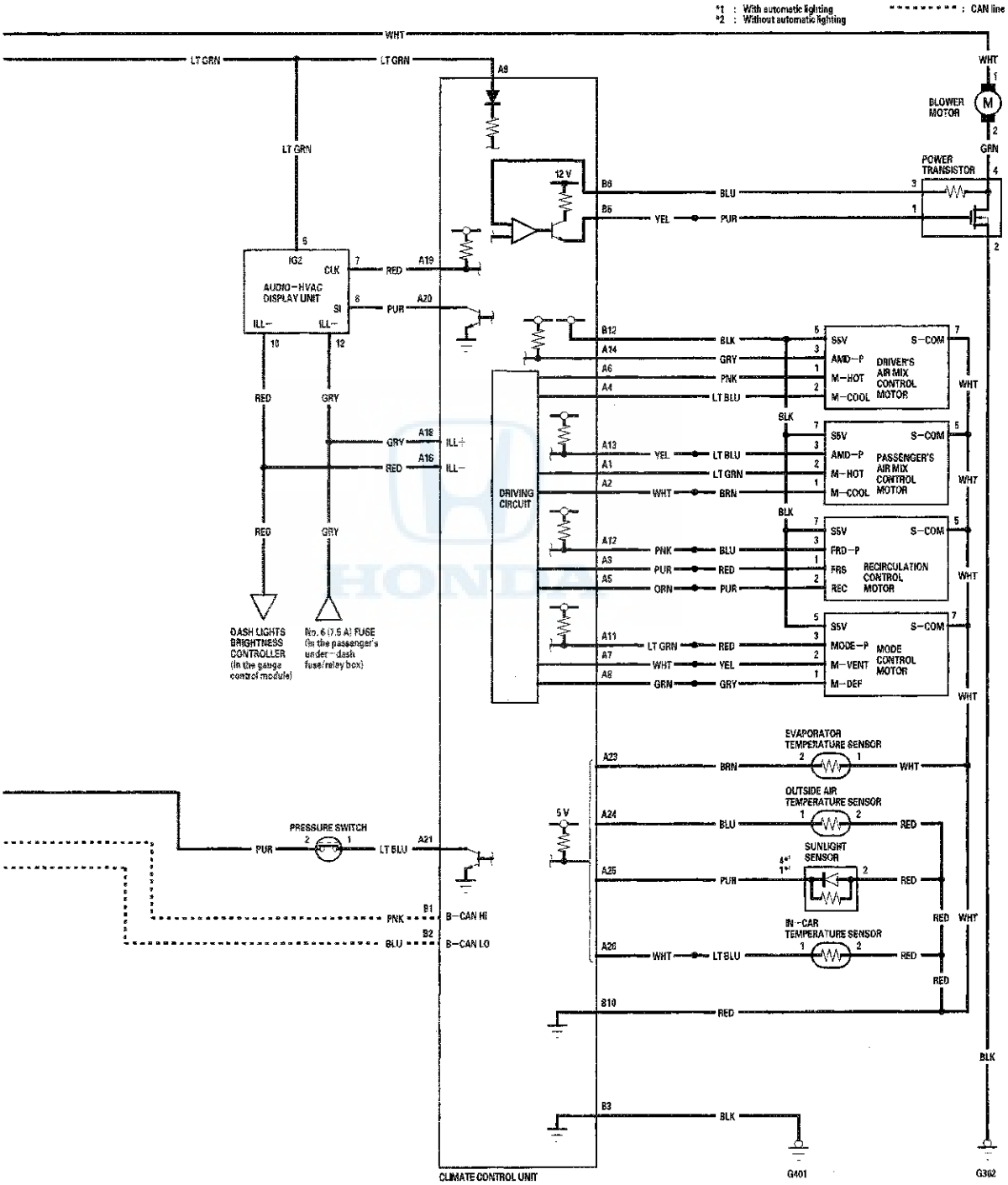
*1 : With automatic lighting
*2 : Without automatic lighting
: CAN line
WHT
LT GRN
A9
BLOWER MOTOR
GRN
POWER TRANSISTOR
12 V
B8
BLU
B6
YEL
PUR
IG2
CLK
AUDIO-HVAC DISPLAY UNIT
SI
ILL-
RED
A19
A20
B12
BLK
A14
GRY
A6
PNK
A4
LT BLU
S5V
S-COM
AMD-P
M-HOT
M-COOL
DRIVER'S AIR MIX CONTROL MOTOR
A13
A1
LT GRN
A2
WHT
BRN
PASSENGER'S AIR MIX CONTROL MOTOR
A18
A16
ILL+
DRIVING CIRCUIT
A12
A3
A5
ORN
FRD-P
FRS
REC
RECIRCULATION CONTROL MOTOR
A11
A7
A8
MODE-P
M-VENT
M-DEF
MODE CONTROL MOTOR
DASH LIGHTS BRIGHTNESS CONTROLLER (in the gauge control module)
No. 6 (7.5 A) FUSE (in the passenger's under-dash fuse/relay box)
EVAPORATOR TEMPERATURE SENSOR
A23
OUTSIDE AIR TEMPERATURE SENSOR
A24
5 V
SUNLIGHT SENSOR
A25
IN-CAR TEMPERATURE SENSOR
A26
PRESSURE SWITCH
A21
B1
B-CAN HI
B2
B-CAN LO
B10
B3
CLIMATE CONTROL UNIT
G401
G302

DTC Troubleshooting

DTC indicator A: Climate Control Unit Internal Error

NOTE: Check the battery condition (see page 22-88) and the charging systen output (see page 4-27).

1. Turn the ignition switch to LOCK (0), and then to ON (II).
2. Do the self-diagnostic function with the climate control unit (see page 21-101).
3. Check for DTCs.

   Is DTC A indicated?

   YES—The climate control unit is faulty; replace the climate control unit. ■

   NO—Intermittent failure, the climate control unit is OK at this time. Check for poor connections at the climate control unit and at G401 (with navigation and premium audio: see page 22-40, with premium audio, see page 22-42, without premium audio, see page 22-44). ■

DTC indicator J and A/C ON: A Problem in the Mode Control Linkage, Doors, or Motor Circuit

1. Turn the ignition switch to LOCK (0), and then to ON (II).
2. Do the self-diagnostic function with the climate control unit (see page 21-101).
3. Check for DTCs.

   Is DTC J and A/C ON indicated?

   YES—Go to step 4.

   NO—Intermittent failure, check for loose wires or poor connections on the mode control motor circuit. ■

4. Turn the ignition switch to LOCK (0).
5. Test the mode control motor (see page 21-178).

   Is the mode control motor OK?

   YES—Go to step 6.

   NO—Replace the mode control motor (see page 21-59), or repair the mode control linkage or doors. ■

6. Disconnect the mode control motor 7P connector.
7. Disconnect climate control unit connector A (28P).

8. Check for continuity between the following terminals of climate control unit connector A (28P) and the mode control motor 7P connector.

28P:	7P:
No. 7	No. 2
No. 8	No. 1

CLIMATE CONTROL UNIT CONNECTOR A (28P)
Wire side of female terminals

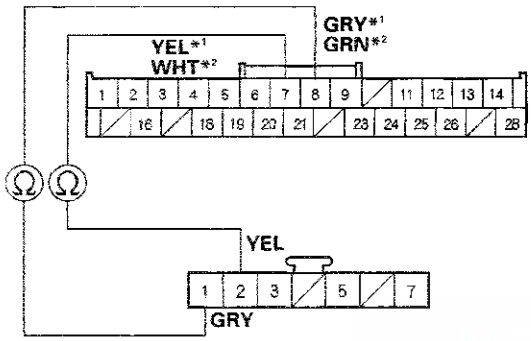

MODE CONTROL MOTOR 7P CONNECTOR
Wire side of female terminals

***1: With navigation**
***2: Without navigation**

Is there continuity?

YES—Go to step 9.

NO—Repair open in the wire(s) between the climate control unit and the mode control motor. ■

9. Check for continuity between body ground and climate control unit connector A (28P) No. 7 and No. 8 terminals individually.

CLIMATE CONTROL UNIT CONNECTOR A (28P)

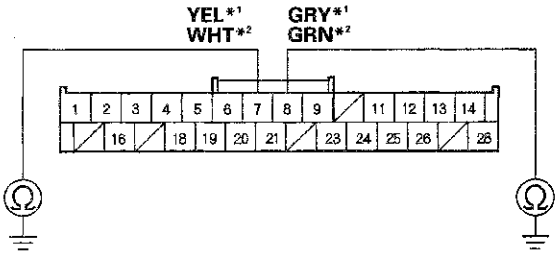

Wire side of female terminals

***1: With navigation**
***2: Without navigation**

Is there continuity?

YES—Repair short to body ground in the wire(s) between the climate control unit and the mode control motor. ■

NO—Substitute a known-good climate control unit, and recheck. If the symptom/indication goes away, replace the original climate control unit. ■

DTC Troubleshooting (cont'd)

DTC U0155: Climate Control Unit Lost Communication with Gauge Control Module

NOTE: If you are troubleshooting multiple DTCs, be sure to follow the instructions in B-CAN system diagnosis test mode A (see page 22-120).

1. Clear the DTC with the HDS.
2. Turn the ignition switch to LOCK (0), and then to ON (II).
3. Do the self-diagnostic function with the HDS (see page 21-100).
4. Check for DTCs.

   Is DTC U0155 indicated?

   YES—Go to step 5.

   NO—The system is OK at this time. Check for loose wires or poor connections at the gauge control module and the climate control unit. ■

5. Select UNIT INFORMATION in the BODY ELECTRICAL menu.
6. Select CONNECTED UNIT in the UNIT INFORMATION menu.

   Is the gauge control module detected?

   YES—Substitute a known-good climate control unit, and recheck. If the symptom/indication goes away, replace the original climate control unit (see page 21-180). ■

   NO—Go to step 7.

7. Disconnect driver's under-dash fuse/relay box connector P (20P).
8. Disconnect the gauge control module 32P connector.
9. Disconnect climate control unit connector B (12P).
10. Check for continuity between the following terminals of driver's under-dash fuse/relay box connector P (20P), the gauge control module 32P connector, and climate control unit connector B (12P).

20P:	32P:
No. 5	No. 18
No. 6	No. 19

12P:	32P:
No. 1	No. 19
No. 2	No. 18

DRIVER'S UNDER-DASH FUSE/RELAY BOX CONNECTOR P (20P)
Wire side of female terminals

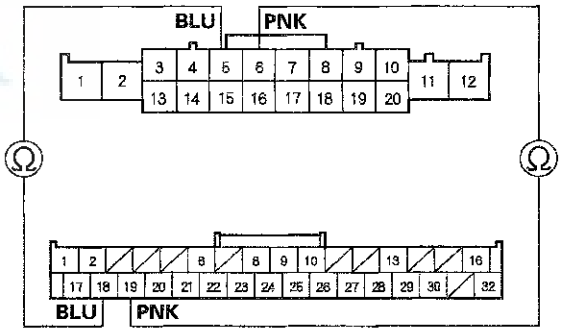

GAUGE CONTROL MODULE 32P CONNECTOR
Wire side of female terminals

GAUGE CONTROL MODULE 32P CONNECTOR
Wire side of female terminals

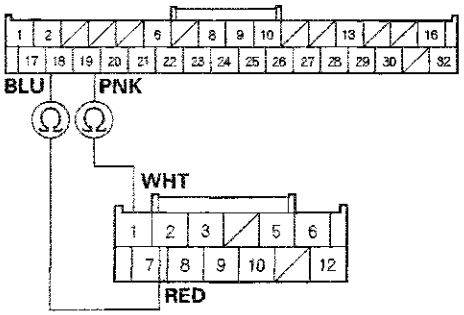

CLIMATE CONTROL UNIT CONNECTOR B (12P)
Wire side of female terminals

Is there continuity?

YES—Go to the gauge control module input test (see page 22-320). ■

NO—Repair open in the wire between the MICU and the gauge control module, or open in the wire between the climate control unit and the gauge control module. ■

DTC B121A or DTC indicator G and A/C ON: An Open in the Mode Control Motor Circuit

1. Clear the DTC with the HDS.
2. Turn the ignition switch to LOCK (0), and then to ON (II).
3. Do the self-diagnostic function with the HDS (see page 21-100) or climate control unit (see page 21-101).
4. Check for DTCs.

   Is DTC B121A or G and A/C ON indicated?

   YES—Go to step 5.

   NO—Intermittent failure, check for loose wires or poor connections on the mode control motor circuit. ■

5. Turn the ignition switch to LOCK (0).
6. Test the mode control motor (see page 21-178).

   Is the mode control motor OK?

   YES—Go to step 7.

   NO—Replace the mode control motor (see page 21-59). ■

(cont'd)

DTC Troubleshooting (cont'd)

7. Disconnect the mode control motor 7P connector.

8. Disconnect climate control unit connectors A (28P) and B (12P).

9. Check for continuity between the following terminals of climate control unit connectors A (28P), B (12P), and the recirculation control motor 7P connector.

28P:	7P:
No. 11	No. 3

12P:	7P:
No. 10	No. 7
No. 12	No. 5

CLIMATE CONTROL UNIT CONNECTOR A (28P)
Wire side of female terminals

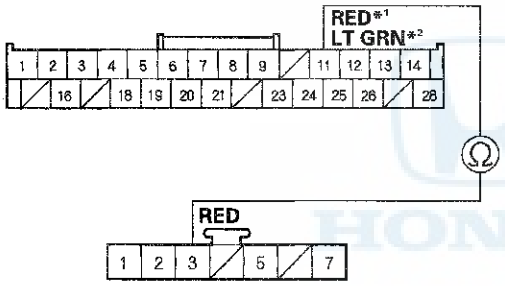

MODE CONTROL MOTOR 7P CONNECTOR
Wire side of female terminals

***1: With navigation**
***2: Without navigation**

CLIMATE CONTROL UNIT CONNECTOR B (12P)
Wire side of female terminals

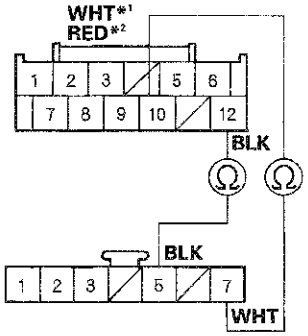

MODE CONTROL MOTOR 7P CONNECTOR
Wire side of female terminals

***1: With navigation**
***2: Without navigation**

Is there continuity?

YES—Check for loose wires or poor connections at climate control unit connectors A (28P), B (12P), and at the mode control motor 7P connector. If the connections are good, substitute a known-good climate control unit and recheck. If the symptom/indication goes away, replace the original climate control unit. ■

NO—Repair open in the wire(s) between the climate control unit and the mode control motor. ■

DTC B121B or DTC indicator H and A/C ON: A Short in the Mode Control Motor Circuit

1. Clear the DTC with the HDS.

2. Turn the ignition switch to LOCK (0), and then to ON (II).

3. Do the self-diagnostic function with the HDS (see page 21-100) or climate control unit (see page 21-101).

4. Check for DTCs.

   Is DTC B121B or H and A/C ON indicated?

   YES—Go to step 5.

   NO—Intermittent failure. Check for loose wires or poor connections on the mode control motor circuit. ■

5. Check for DTCs.

   Are these DTCs also present; B1220 or L and A/C ON, and/or B1234 or B and A/C ON, and/or B1237 or E and A/C ON?

   YES—Go to step 13.

   NO—Go to step 6.

6. Turn the ignition switch to LOCK (0).

7. Test the mode control motor (see page 21-178).

   Is the mode control motor OK?

   YES—Go to step 8.

   NO—Replace the mode control motor (see page 21-59). ■

8. Disconnect the mode control motor 7P connector.

9. Disconnect climate control unit connectors A (28P) and B (12P).

10. Check for continuity between body ground and climate control unit connector A (28P) No. 11 terminal.

CLIMATE CONTROL UNIT CONNECTOR A (28P)

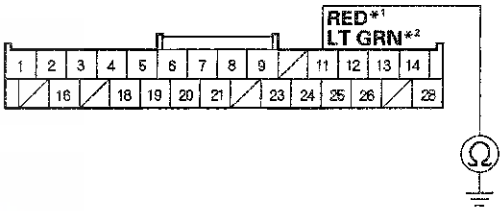

Wire side of female terminals

***1: With navigation**
***2: Without navigation**

Is there continuity?

YES—Repair short to body ground in the wire between the climate control unit and the mode control motor. ■

NO—Go to step 11.

(cont'd)

DTC Troubleshooting (cont'd)

11. Check for continuity between climate control unit connector A (28P) No. 11 terminal and climate control unit connector B (12P) No. 12 terminal.

CLIMATE CONTROL UNIT CONNECTOR A (28P)
Wire side of female terminals

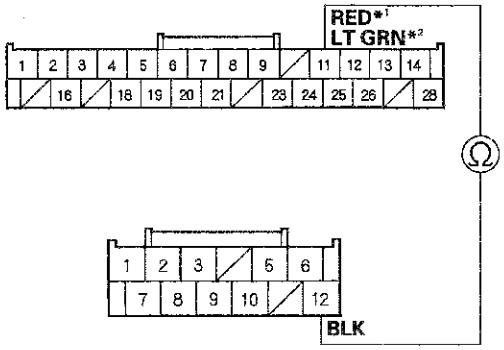

CLIMATE CONTROL UNIT CONNECTOR B (12P)
Wire side of female terminals

***1: With navigation**
***2: Without navigation**

Is there continuity?

YES—Repair short in the wires. ■

NO—Go to step 12.

12. Turn the ignition switch to ON (II), and measure the voltage between climate control unit connector A (28P) No. 11 terminal and body ground.

CLIMATE CONTROL UNIT CONNECTOR A (28P)

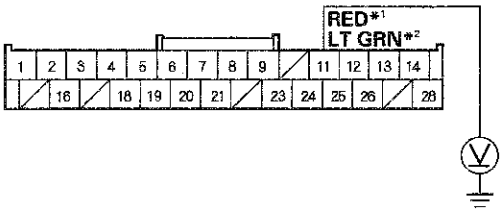

Wire side of female terminals

***1: With navigation**
***2: Without navigation**

Is there any voltage?

YES—Repair short to power in the wire between the climate control unit and the mode control motor. This short may also damage the climate control unit. Repair short to power before replacing the climate control unit. ■

NO—Substitute a known-good climate control unit, and recheck. If the symptom/indication goes away, replace the original climate control unit. ■

13. Turn the ignition switch to LOCK (0), and disconnect climate control unit connector B (12P).

14. Disconnect these items:

- Driver's air mix control motor
- Passenger's air mix control motor
- Recirculation control motor
- Mode control motor

15. Check for continuity between climate control unit connector B (12P) No. 12 terminal and body ground.

CLIMATE CONTROL UNIT CONNECTOR B (12P)

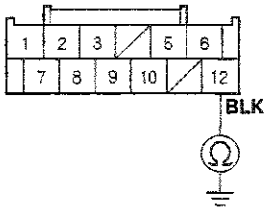

Wire side of female terminals

Is there continuity?

YES—Repair short to body ground in the wire. ■

NO—Go to step 16.

16. Turn the ignition switch to ON (II), and check the same terminal for voltage between the terminal and body ground.

CLIMATE CONTROL UNIT CONNECTOR B (12P)

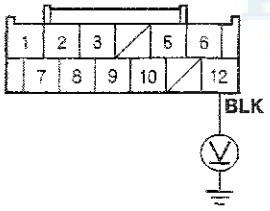

Wire side of female terminals

Is there any voltage?

YES—Repair short to power in the wire. This short may have also damaged the climate control unit. Repair short to power before replacing the climate control unit. ■

NO—Go to step 17.

17. Turn the ignition switch to LOCK (0).

18. Reconnect climate control unit connector B (12P).

19. Turn the ignition switch to ON (II), and measure the voltage between climate control unit connector B (12P) No. 12 terminal and body ground.

CLIMATE CONTROL UNIT CONNECTOR B (12P)

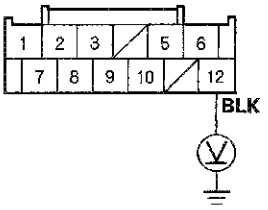

Wire side of female terminals

Is there about 5 volts?

YES—Go to step 20.

NO—Check for a loose wire or poor connection at climate control unit connector B (12P). If the connection is good, substitute a known-good climate control unit and recheck. If the symptom/indication goes away, replace the original climate control unit. ■

(cont'd)

DTC Troubleshooting (cont'd)

20. While checking the same terminal for voltage to ground, reconnect these items individually and note the voltage reading each time:

    - Driver's air mix control motor
    - Passenger's air mix control motor
    - Recirculation control motor
    - Mode control motor

CLIMATE CONTROL UNIT CONNECTOR B (12P)

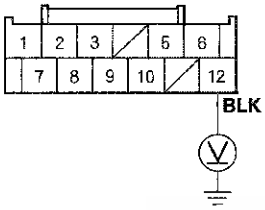

Wire side of female terminals

Does the voltage remain at about 5 volts?

YES—Substitute a known-good climate control unit and recheck. If the symptom/indication goes away, replace the original climate control unit.■

NO—Replace the component that caused the voltage drop.■

DTC B1220 or DTC indicator L and A/C ON: A Short in the Recirculation Control Motor Circuit

1. Clear the DTC with the HDS.

2. Turn the ignition switch to LOCK (0), and then to ON (II).

3. Do the self-diagnostic function with the HDS (see page 21-100) or climate control unit (see page 21-101).

4. Check for DTCs.

   Is DTC B1220 or L and A/C ON indicated?

   YES—Go to step 5.

   NO—Intermittent failure. Check for loose wires or poor connections on the recirculation control motor circuit.■

5. Check for DTCs.

   Are these DTCs also present; B121B or H and A/C ON, and/or B1234 or B and A/C ON, and/or B1237 or E and A/C ON?

   YES—Go to step 13.

   NO—Go to step 6.

6. Turn the ignition switch to LOCK (0).

7. Test the recirculation control motor (see page 21-179).

   Is the recirculation control motor OK?

   YES—Go to step 8.

   NO—Replace the recirculation control motor (see page 21-61).■

8. Disconnect the recirculation control motor 7P connector.

9. Disconnect climate control unit connectors A (28P) and B (12P).

10. Check for continuity between body ground and climate control unit connector A (28P) No. 12 terminal.

CLIMATE CONTROL UNIT CONNECTOR A (28P)

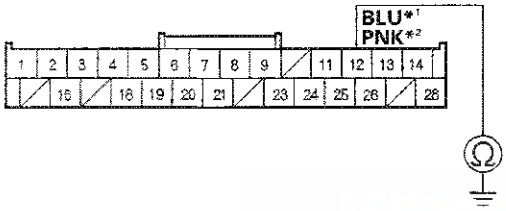

Wire side of female terminals

***1: With navigation**
***2: Without navigation**

Is there continuity?

YES—Repair short to body ground in the wire between the climate control unit and the recirculation control motor.■

NO—Go to step 11.

11. Check for continuity between climate control unit connector A (28P) No. 12 terminal and climate control unit connector B (12P) No. 12 terminal.

CLIMATE CONTROL UNIT CONNECTOR A (28P)
Wire side of female terminals

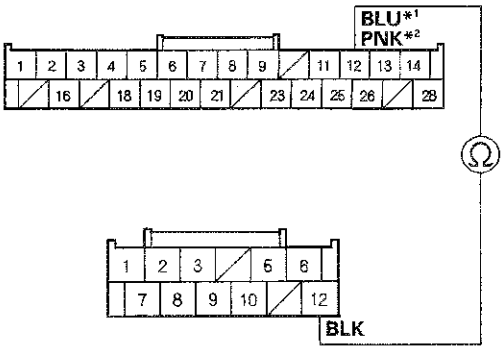

CLIMATE CONTROL UNIT CONNECTOR B (12P)
Wire side of female terminals

***1: With navigation**
***2: Without navigation**

Is there continuity?

YES—Repair short in the wires.■

NO—Go to step 12.

(cont'd)

DTC Troubleshooting (cont'd)

12. Turn the ignition switch to ON (II), and measure the voltage between climate control unit connector A (28P) No. 12 terminal and body ground.

CLIMATE CONTROL UNIT CONNECTOR A (28P)

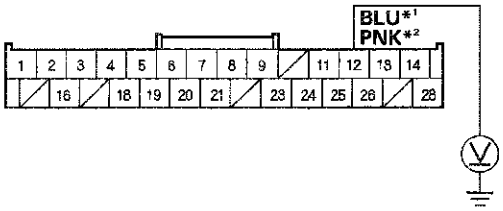

Wire side of female terminals

***1: With navigation**
***2: Without navigation**

Is there any voltage?

YES—Repair short to power in the wire between the climate control unit and the recirculation control motor. This short may also damage the climate control unit. Repair short to power before replacing the climate control unit. ■

NO—Substitute a known-good climate control unit, and recheck. If the symptom/indication goes away, replace the original climate control unit. ■

13. Turn the ignition switch to LOCK (0), and disconnect climate control unit connector B (12P).

14. Disconnect these items:

- Driver's air mix control motor
- Passenger's air mix control motor
- Recirculation control motor
- Mode control motor

15. Check for continuity between climate control unit connector B (12P) No. 12 terminal and body ground.

CLIMATE CONTROL UNIT CONNECTOR B (12P)

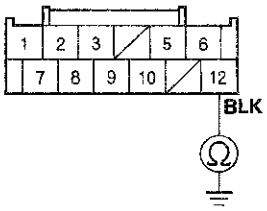

Wire side of female terminals

Is there continuity?

YES—Repair short to body ground in the wire. ■

NO—Go to step 16.

16. Turn the ignition switch to ON (II), and check the same terminal for voltage between the terminal and body ground.

CLIMATE CONTROL UNIT CONNECTOR B (12P)

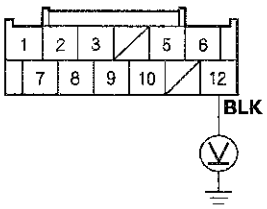

Wire side of female terminals

Is there any voltage?

YES—Repair short to power in the wire. This short may have also damaged the climate control unit. Repair short to power before replacing the climate control unit. ■

NO—Go to step 17.

17. Turn the ignition switch to LOCK (0).

18. Reconnect climate control unit connector B (12P).

19. Turn the ignition switch to ON (II), and measure the voltage between climate control unit connector B (12P) No. 12 terminal and body ground.

CLIMATE CONTROL UNIT CONNECTOR B (12P)

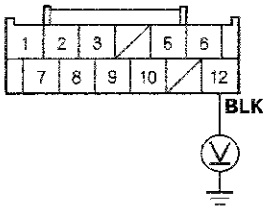

Wire side of female terminals

Is there about 5 volts?

YES—Go to step 20.

NO—Check for a loose wire or poor connection at climate control unit connector B (12P). If the connection is good, substitute a known-good climate control unit and recheck. If the symptom/indication goes away, replace the original climate control unit.■

20. While checking the same terminal for voltage to ground, reconnect these items individually and note the voltage reading each time:

- Driver's air mix control motor
- Passenger's air mix control motor
- Recirculation control motor
- Mode control motor

CLIMATE CONTROL UNIT CONNECTOR B (12P)

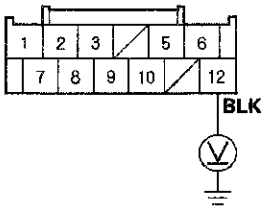

Wire side of female terminals

Does the voltage remain at about 5 volts?

YES—Substitute a known-good climate control unit and recheck. If the symptom/indication goes away, replace the original climate control unit.■

NO—Replace the component that caused the voltage drop.■

DTC Troubleshooting (cont'd)

DTC B1225 or DTC indicator A and AUTO: An Open in the In-car Temperature Sensor Circuit

1. Clear the DTC with the HDS.

2. Turn the ignition switch to LOCK (0), and then to ON (II).

3. Do the self-diagnostic function with the HDS (see page 21-100) or climate control unit (see page 21-101).

4. Check for DTCs.

   Is DTC B1225 or A and AUTO indicated?

   YES—Go to step 5.

   NO—Intermittent failure, check for loose wires or poor connections on the in-car temperature sensor circuit. ■

5. Turn the ignition switch to LOCK (0).

6. Remove the in-car temperature sensor (see page 21-174), and test it (see page 21-174).

   Is the in-car temperature sensor OK?

   YES—Go to step 7.

   NO—Replace the in-car temperature sensor. ■

7. Disconnect climate control unit connectors A (28P) and B (12P).

8. Check for continuity between climate control unit connector A (28P) No. 26 terminal and the in-car temperature sensor 2P connector No. 1 terminal.

CLIMATE CONTROL UNIT CONNECTOR A (28P)
Wire side of female terminals

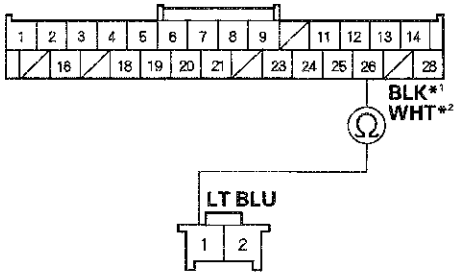

IN-CAR TEMPERATURE SENSOR 2P CONNECTOR
Wire side of female terminals

***1: With navigation**
***2: Without navigation**

Is there continuity?

YES—Go to step 9.

NO—Repair open in the wire between the climate control unit and the in-car temperature sensor. ■

9. Check for continuity between climate control unit connector B (12P) No. 10 terminal and the in-car temperature sensor 2P connector No. 2 terminal.

CLIMATE CONTROL UNIT CONNECTOR B (12P)
Wire side of female terminals

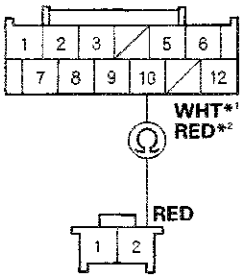

IN-CAR TEMPERATURE SENSOR 2P CONNECTOR
Wire side of female terminals

***1: With navigation**
***2: Without navigation**

Is there continuity?

YES—Check for loose wires or poor connections at climate control unit connectors A (28P), B (12P), and at the in-car temperature sensor 2P connector. If the connections are good, substitute a known-good climate control unit, and recheck. If the symptom/indication goes away, replace the original climate control unit. ■

NO—Repair open in the wire between the climate control unit and the in-car temperature sensor. ■

DTC B1226 or DTC indicator B and AUTO: A Short in the In-car Temperature Sensor Circuit

1. Clear the DTC with the HDS.

2. Turn the ignition switch to LOCK (0), and then to ON (II).

3. Do the self-diagnostic function with the HDS (see page 21-100) or climate control unit (see page 21-101).

4. Check for DTCs.

   Is DTC B1226 or B and AUTO indicated?

   YES—Go to step 5.

   NO—Intermittent failure. Check for loose wires or poor connections on the in-car temperature sensor circuit. ■

5. Turn the ignition switch to LOCK (0).

6. Remove the in-car temperature sensor (see page 21-174), and test it (see page 21-174).

   Is the in-car temperature sensor OK?

   YES—Go to step 7.

   NO—Replace the in-car temperature sensor. ■

7. Disconnect climate control unit connectors A (28P) and B (12P).

(cont'd)

DTC Troubleshooting (cont'd)

8. Check for continuity between climate control unit connector A (28P) No. 26 terminal and body ground.

CLIMATE CONTROL UNIT CONNECTOR A (28P)

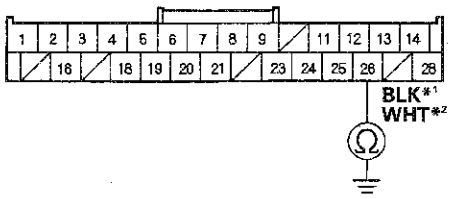

Wire side of female terminals

***1: With navigation**
***2: Without navigation**

Is there continuity?

YES—Repair short to body ground in the wire between the climate control unit and the in-car temperature sensor.■

NO—Go to step 9.

9. Check for continuity between climate control unit connector A (28P) No. 26 terminal and climate control unit connector B (12P) No. 10 terminal.

CLIMATE CONTROL UNIT CONNECTOR A (28P)
Wire side of female terminals

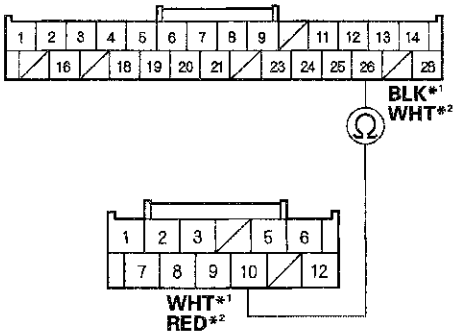

CLIMATE CONTROL UNIT CONNECTOR B (12P)
Wire side of female terminals

***1: With navigation**
***2: Without navigation**

Is there continuity?

YES—Repair short in the wires between the climate control unit and the in-car temperature sensor.■

NO—Substitute a known-good climate control unit, and recheck. If the symptom/indication goes away, replace the original climate control unit.■

DTC B1227 or DTC indicator C and AUTO: An Open in the Outside Air Temperature Sensor Circuit

1. Clear the DTC with the HDS.

2. Turn the ignition switch to LOCK (0), and then to ON (II).

3. Do the self-diagnostic function with the HDS (see page 21-100) or climate control unit (see page 21-101).

4. Check for DTCs.

   Is DTC B1227 or C and AUTO indicated?

   YES—Go to step 5.

   NO—Intermittent failure, check for loose wires or poor connections on the outside air temperature sensor circuit. ■

5. Turn the ignition switch to LOCK (0).

6. Remove the outside air temperature sensor (see page 21-175), and test it (see page 21-175).

   Is the outside air temperature sensor OK?

   YES—Go to step 7.

   NO—Replace the outside air temperature sensor. ■

7. Disconnect climate control unit connectors A (28P) and B (12P).

8. Check for continuity between climate control unit connector A (28P) No. 24 terminal and the outside air temperature sensor 2P connector No. 1 terminal.

CLIMATE CONTROL UNIT CONNECTOR A (28P)
Wire side of female terminals

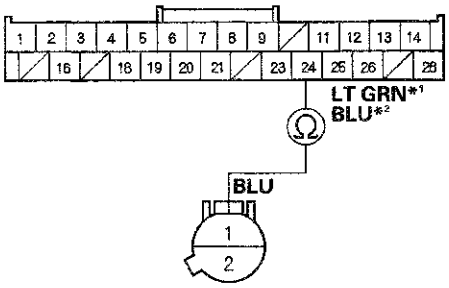

OUTSIDE AIR TEMPERATURE SENSOR 2P CONNECTOR
Wire side of female terminals

***1: With navigation**
***2: Without navigation**

Is there continuity?

YES—Go to step 9.

NO—Repair open in the wire between the climate control unit and the outside air temperature sensor. ■

(cont'd)

DTC Troubleshooting (cont'd)

9. Check for continuity between climate control unit connector B (12P) No. 10 terminal and the outside air temperature sensor 2P connector No. 2 terminal.

CLIMATE CONTROL UNIT CONNECTOR B (12P)
Wire side of female terminals

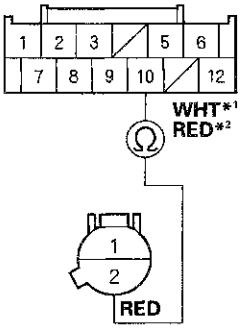

OUTSIDE AIR TEMPERATURE SENSOR 2P CONNECTOR
Wire side of female terminals

***1: With navigation**
***2: Without navigation**

Is there continuity?

YES—Check for loose wires or poor connections at climate control unit connectors A (28P), B (12P), and at the outside air temperature sensor 2P connector. If the connections are good, substitute a known-good climate control unit, and recheck. If the symptom/indication goes away, replace the original climate control unit.■

NO—Repair open in the wire between the climate control unit and the outside air temperature sensor.■

DTC B1228 or DTC indicator D and AUTO: A Short in the Outside Air Temperature Sensor Circuit

1. Clear the DTC with the HDS.

2. Turn the ignition switch to LOCK (0), and then to ON (II).

3. Do the self-diagnostic function with the HDS (see page 21-100) or climate control unit (see page 21-101).

4. Check for DTCs.

   Is DTC B1228 or D and AUTO indicated?

   YES—Go to step 5.

   NO—Intermittent failure. Check for loose wires or poor connections on the outside air temperature sensor circuit.■

5. Turn the ignition switch to LOCK (0).

6. Remove the outside air temperature sensor (see page 21-175), and test it (see page 21-175).

   Is the outside air temperature sensor OK?

   YES—Go to step 7.

   NO—Replace the outside air temperature sensor.■

7. Disconnect climate control unit connectors A (28P) and B (12P).

8. Check for continuity between climate control unit connector A (28P) No. 24 terminal and body ground.

CLIMATE CONTROL UNIT CONNECTOR A (28P)

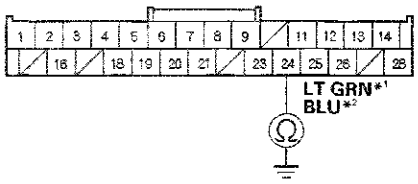

Wire side of female terminals

***1: With navigation**
***2: Without navigation**

Is there continuity?

YES—Repair short to body ground in the wire between the climate control unit and the outside air temperature sensor. ■

NO—Go to step 9.

9. Check for continuity between climate control unit connector A (28P) No. 24 terminal and climate control unit connector B (12P) No. 10 terminal.

CLIMATE CONTROL UNIT CONNECTOR A (28P)
Wire side of female terminals

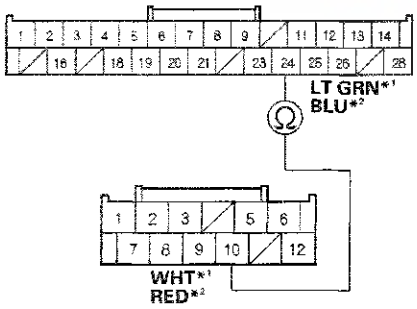

CLIMATE CONTROL UNIT CONNECTOR B (12P)
Wire side of female terminals

***1: With navigation**
***2: Without navigation**

Is there continuity?

YES—Repair short in the wires between the climate control unit and the outside air temperature sensor. ■

NO—Substitute a known-good climate control unit, and recheck. If the symptom/indication goes away, replace the original climate control unit. ■

DTC B1229 or DTC indicator E and AUTO: An Open in the Sunlight Sensor Circuit

1. Clear the DTC with the HDS.

2. Turn the ignition switch to LOCK (0), and then to ON (II).

3. Do the self-diagnostic function with the HDS (see page 21-100) or climate control unit (see page 21-101).

4. Check for DTCs.

   Is DTC B1229 or E and AUTO indicated?

   YES—Go to step 5.

   NO—Intermittent failure, check for loose wires or poor connections on the sunlight sensor circuit. ■

5. Turn the ignition switch to LOCK (0).

6. Disconnect the sunlight sensor 5P connector (with automatic lighting) or 2P connector (without automatic lighting).

7. Disconnect climate control unit connectors A (28P) and B (12P).

(cont'd)

DTC Troubleshooting (cont'd)

8. Check for continuity between climate control unit connector A (28P) No. 25 terminal and the sunlight sensor 5P connector No. 4 terminal (with automatic lighting), or the sunlight sensor 2P connector No. 1 terminal (without automatic lighting).

With automatic lighting

CLIMATE CONTROL UNIT CONNECTOR A (28P)
Wire side of female terminals

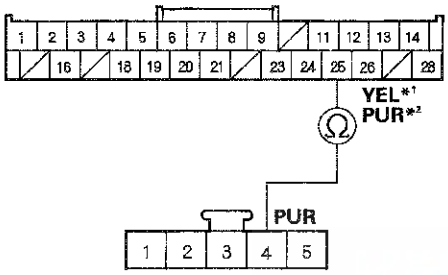

SUNLIGHT SENSOR 5P CONNECTOR
Wire side of female terminals

***1: With navigation**
***2: Without navigation**

Without automatic lighting

CLIMATE CONTROL UNIT CONNECTOR A (28P)
Wire side of female terminals

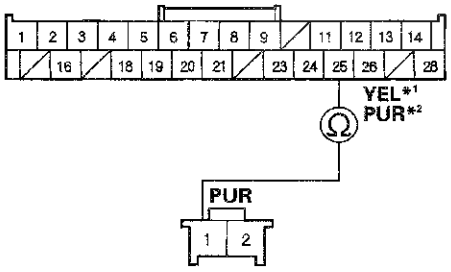

SUNLIGHT SENSOR 2P CONNECTOR
Wire side of female terminals

***1: With navigation**
***2: Without navigation**

Is there continuity?

YES—Go to step 9.

NO—Repair open in the wire between the climate control unit and the sunlight sensor. ■

9. Check for continuity between climate control unit connector B (12P) No. 10 terminal and the sunlight sensor 5P connector No. 2 terminal (with automatic lighting), or the sunlight sensor 2P connector No. 2 terminal (without automatic lighting).

With automatic lighting

CLIMATE CONTROL UNIT CONNECTOR B (12P)
Wire side of female terminals

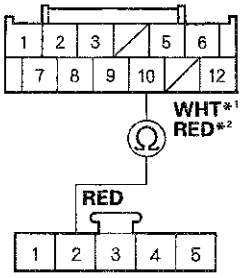

SUNLIGHT SENSOR 5P CONNECTOR
Wire side of female terminals

***1: With navigation**
***2: Without navigation**

Without automatic lighting

CLIMATE CONTROL UNIT CONNECTOR B (12P)
Wire side of female terminals

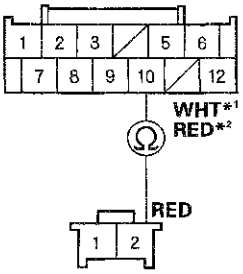

SUNLIGHT SENSOR 2P CONNECTOR
Wire side of female terminals

***1: With navigation**
***2: Without navigation**

Is there continuity?

YES—Go to step 10.

NO—Repair open in the wire between the climate control unit and the sunlight sensor. ■

10. Reconnect the sunlight sensor 5P connector (with automatic lighting) or 2P connector (without automatic lighting).

11. Reconnect climate control unit connectors A (28P) and B (12P).

12. Test the sunlight sensor (see page 21-176).

    Is the sunlight sensor OK?

    YES—Check for loose wires or poor connections at climate control unit connector and at the sunlight sensor 5P connector (with automatic lighting), or the sunlight sensor 2P connector (without automatic lighting). If the connections are good, substitute a known-good climate control unit, and recheck. If the symptom/indication goes away, replace the original climate control unit.■

    NO—Replace the sunlight sensor (see page 21-176). ■

DTC B1230 or DTC indicator F and AUTO: A Short in the Sunlight Sensor Circuit

1. Clear the DTC with the HDS.

2. Turn the ignition switch to LOCK (0), and then to ON (II).

3. Do the self-diagnostic function with the HDS (see page 21-100) or climate control unit (see page 21-101).

4. Check for DTCs.

    Is DTC B1230 or F and AUTO indicated?

    YES—Go to step 5.

    NO—Intermittent failure. Check for loose wires or poor connections on the sunlight sensor circuit.■

5. Turn the ignition switch to LOCK (0).

6. Disconnect the sunlight sensor 5P connector (with automatic lighting) or 2P connector (without automatic lighting).

7. Disconnect climate control unit connectors A (28P) and B (12P).

8. Check for continuity between climate control unit connector A (28P) No. 25 terminal and body ground.

CLIMATE CONTROL UNIT CONNECTOR A (28P)

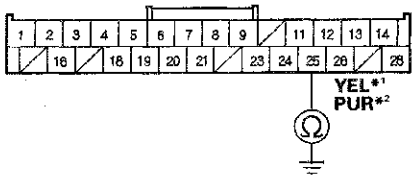

Wire side of female terminals

***1: With navigation**
***2: Without navigation**

Is there continuity?

YES—Repair short to body ground in the wire between the climate control unit and the sunlight sensor.■

NO—Go to step 9.

(cont'd)

DTC Troubleshooting (cont'd)

9. Check for continuity between climate control unit connector A (28P) No. 25 terminal and climate control unit connector B (12P) No. 10 terminal.

CLIMATE CONTROL UNIT CONNECTOR A (28P)
Wire side of female terminals

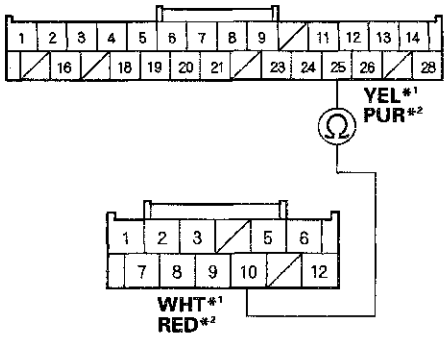

CLIMATE CONTROL UNIT CONNECTOR B (12P)
Wire side of female terminals

***1: With navigation**
***2: Without navigation**

Is there continuity?

YES—Repair short in the wires between the climate control unit and the sunlight sensor.■

NO—Go to step 10.

10. Reconnect the sunlight sensor 5P connector (with automatic lighting) or 2P connector (without automatic lighting).

11. Reconnect climate control unit connectors A (28P) and B (12P).

12. Test the sunlight sensor (see page 21-176).

Is the sunlight sensor OK?

YES—Substitute a known-good climate control unit, and recheck. If the symptom/indication goes away, replace the original climate control unit.■

NO—Replace the sunlight sensor (see page 21-176). ■

DTC B1231 or DTC indicator G and AUTO: An Open in the Evaporator Temperature Sensor Circuit

1. Clear the DTC with the HDS.

2. Turn the ignition switch to LOCK (0), and then to ON (II).

3. Do the self-diagnostic function with the HDS (see page 21-100) or climate control unit (see page 21-101).

4. Check for DTCs.

Is DTC B1231 or G and AUTO indicated?

YES—Go to step 5.

NO—Intermittent failure, check for loose wires or poor connections on the evaporator temperature sensor circuit.■

5. Turn the ignition switch to LOCK (0).

6. Disconnect climate control unit connectors A (28P) and B (12P).

7. Check for continuity between climate control unit connector A (28P) No. 23 terminal and the evaporator temperature sensor 2P connector No. 2 terminal.

CLIMATE CONTROL UNIT CONNECTOR A (28P)
Wire side of female terminals

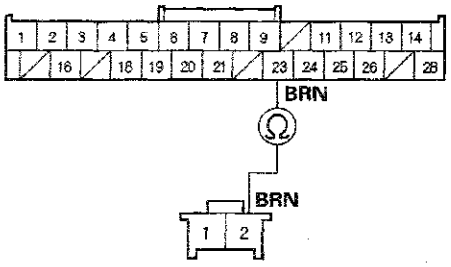

EVAPORATOR TEMPERATURE SENSOR 2P CONNECTOR
Wire side of female terminals

Is there continuity?

YES—Go to step 8.

NO—Repair open in the wire between the climate control unit and the evaporator temperature sensor. ■

8. Check for continuity between climate control unit connector B (12P) No. 10 terminal and the evaporator temperature sensor 2P connector No. 1 terminal.

CLIMATE CONTROL UNIT CONNECTOR B (12P)
Wire side of female terminals

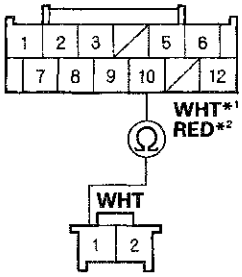

EVAPORATOR TEMPERATURE SENSOR 2P CONNECTOR
Wire side of female terminals

***1: With navigation**
***2: Without navigation**

Is there continuity?

YES—Go to step 9.

NO—Repair open in the wire between the climate control unit and the evaporator temperature sensor. ■

9. Remove the evaporator temperature sensor (see page 21-64), and test it (see page 21-54).

Is the evaporator temperature sensor OK?

YES—Check for loose wires or poor connections at climate control unit connectors A (28P), B (12P), and at the evaporator temperature sensor 2P connector. If the connections are good, substitute a known-good climate control unit, and recheck. If the symptom/indication goes away, replace the original climate control unit. ■

NO—Replace the evaporator temperature sensor. ■

DTC Troubleshooting (cont'd)

DTC B1232 or DTC indicator H and AUTO: A Short in the Evaporator Temperature Sensor Circuit

1. Clear the DTC with the HDS.

2. Turn the ignition switch to LOCK (0), and then to ON (II).

3. Do the self-diagnostic function with the HDS (see page 21-100) or climate control unit (see page 21-101).

4. Check for DTCs.

   Is DTC B1232 or H and AUTO indicated?

   YES—Go to step 5.

   NO—Intermittent failure. Check for loose wires or poor connections on the evaporator temperature sensor circuit. ■

5. Turn the ignition switch to LOCK (0).

6. Disconnect climate control unit connectors A (28P) and B (12P).

7. Check for continuity between climate control unit connector A (28P) No. 23 terminal and body ground.

CLIMATE CONTROL UNIT CONNECTOR A (28P)

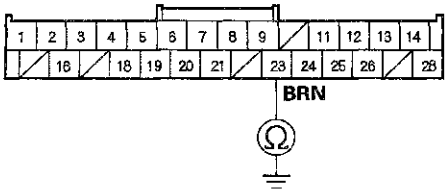

Wire side of female terminals

Is there continuity?

YES—Repair short to body ground in the wire between the climate control unit and the evaporator temperature sensor. ■

NO—Go to step 8.

8. Check for continuity between climate control unit connector A (28P) No. 23 terminal and climate control unit connector B (12P) No. 10 terminal.

CLIMATE CONTROL UNIT CONNECTOR A (28P)
Wire side of female terminals

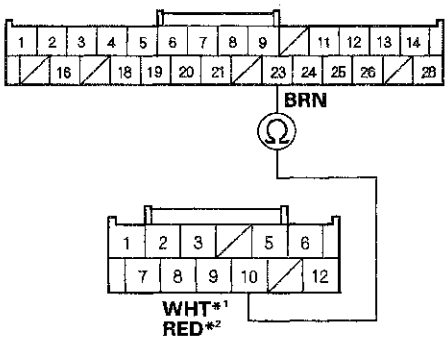

CLIMATE CONTROL UNIT CONNECTOR B (12P)
Wire side of female terminals

***1: With navigation**
***2: Without navigation**

Is there continuity?

YES—Repair short in the wires between the climate control unit and the evaporator temperature sensor. ■

NO—Go to step 9.

9. Remove the evaporator temperature sensor (see page 21-64), and test it (see page 21-54).

   Is the evaporator temperature sensor OK?

   YES—Substitute a known-good climate control unit, and recheck. If the symptom/indication goes away, replace the original climate control unit. ■

   NO—Replace the evaporator temperature sensor. ■

DTC B1233 or DTC indicator A and A/C ON: An Open in the Driver's Air Mix Control Motor Circuit

1. Clear the DTC with the HDS.

2. Turn the ignition switch to LOCK (0), and then to ON (II).

3. Do the self-diagnostic function with the HDS (see page 21-100) or climate control unit (see page 21-101).

4. Check for DTCs.

   Is DTC B1233 or A and A/C ON indicated?

   YES—Go to step 5.

   NO—Intermittent failure, check for loose wires or poor connections on the driver's air mix control motor circuit. ■

5. Turn the ignition switch to LOCK (0).

6. Test the driver's air mix control motor (see page 21-56).

   Is the driver's air mix control motor OK?

   YES—Go to step 7.

   NO—Replace the driver's air mix control motor (see page 21-57). ■

7. Disconnect the driver's air mix control motor 7P connector.

8. Disconnect climate control unit connector A (28P) and B (12P).

9. Check for continuity between the following terminals of climate control unit connectors A (28P), B (12P), and the driver's air mix control motor 7P connector.

28P:	7P:
No. 14	No. 3

12P:	7P:
No. 10	No. 7
No. 12	No. 5

CLIMATE CONTROL UNIT CONNECTOR A (28P)
Wire side of female terminals

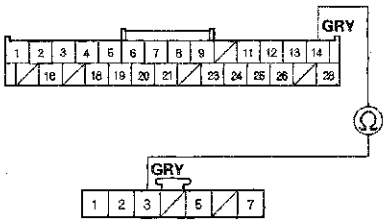

DRIVER'S AIR MIX CONTROL MOTOR 7P CONNECTOR
Wire side of female terminals

CLIMATE CONTROL UNIT CONNECTOR B (12P)
Wire side of female terminals

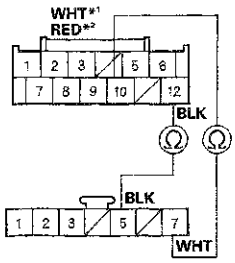

DRIVER'S AIR MIX CONTROL MOTOR 7P CONNECTOR
Wire side of female terminals

***1: With navigation**
***2: Without navigation**

Is there continuity?

YES—Check for loose wires or poor connections at climate control unit connectors A (28P), B (12P), and at the driver's air mix control motor 7P connector. If the connections are good, substitute a known-good climate control unit and recheck. If the symptom/indication goes away, replace the original climate control unit. ■

NO—Repair open in the wire(s) between the climate control unit and the driver's air mix control motor. ■

DTC Troubleshooting (cont'd)

DTC B1234 or DTC indicator B and A/C ON: A Short in the Driver's Air Mix Control Motor Circuit

1. Clear the DTC with the HDS.

2. Turn the ignition switch to LOCK (0), and then to ON (II).

3. Do the self-diagnostic function with the HDS (see page 21-100) or climate control unit (see page 21-101).

4. Check for DTCs.

   Is DTC B1234 or B and A/C ON indicated?

   YES—Go to step 5.

   NO—Intermittent failure. Check for loose wires or poor connections on the driver's air mix control motor circuit. ■

5. Check for DTCs.

   Are these DTCs also present; B121B or H and A/C ON, and/or B1220 or L and A/C ON, and/or B1237 or E and A/C ON?

   YES—Go to step 13.

   NO—Go to step 6.

6. Turn the ignition switch to LOCK (0).

7. Test the driver's air mix control motor (see page 21-56).

   Is the driver's air mix control motor OK?

   YES—Go to step 8.

   NO—Replace the driver's air mix control motor (see page 21-57). ■

8. Disconnect the driver's air mix control motor 7P connector.

9. Disconnect climate control unit connectors A (28P) and B (12P).

10. Check for continuity between body ground and climate control unit connector A (28P) No. 14 terminal.

CLIMATE CONTROL UNIT CONNECTOR A (28P)

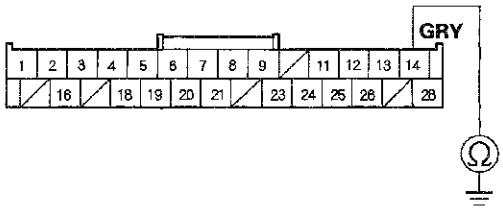

Wire side of female terminals

Is there continuity?

YES—Repair short to body ground in the wire between the climate control unit and the driver's air mix control motor. ■

NO—Go to step 11.

11. Check for continuity between climate control unit connector A (28P) No. 14 terminal and climate control unit connector B (12P) No. 12 terminal.

CLIMATE CONTROL UNIT CONNECTOR A (28P)
Wire side of female terminals

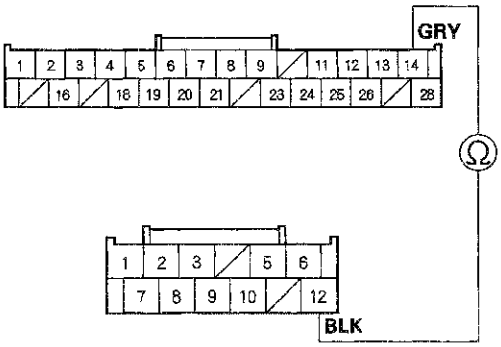

CLIMATE CONTROL UNIT CONNECTOR B (12P)
Wire side of female terminals

Is there continuity?

YES—Repair short in the wires. ■

NO—Go to step 12.

12. Turn the ignition switch to ON (II), and measure the voltage between climate control unit connector A (28P) No. 14 terminal and body ground.

CLIMATE CONTROL UNIT CONNECTOR A (28P)

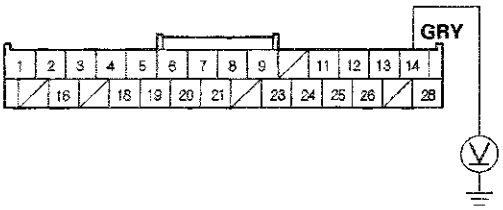

Wire side of female terminals

Is there any voltage?

YES—Repair short to power in the wire between the climate control unit and the driver's air mix control motor. This short may also damage the climate control unit. Repair short to power before replacing the climate control unit.■

NO—Substitute a known-good climate control unit, and recheck. If the symptom/indication goes away, replace the original climate control unit.■

13. Turn the ignition switch to LOCK (0), and disconnect the climate control unit connector B (12P).

14. Disconnect these items:

- Driver's air mix control motor
- Passenger's air mix control motor
- Recirculation control motor
- Mode control motor

15. Check for continuity between climate control unit connector B (12P) No. 12 terminal and body ground.

CLIMATE CONTROL UNIT CONNECTOR B (12P)

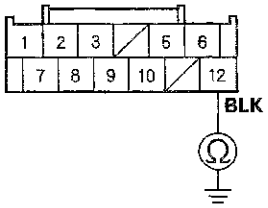

Wire side of female terminals

Is there continuity?

YES—Repair short to body ground in the wire.■

NO—Go to step 16.

16. Turn the ignition switch to ON (II), and check the same terminal for voltage between the terminal and body ground.

CLIMATE CONTROL UNIT CONNECTOR B (12P)

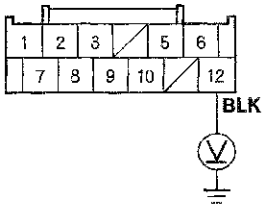

Wire side of female terminals

Is there any voltage?

YES—Repair short to power in the wire. This short may have also damaged the climate control unit. Repair short to power before replacing the climate control unit.■

NO—Go to step 17.

(cont'd)

DTC Troubleshooting (cont'd)

17. Turn the ignition switch to LOCK (0).

18. Reconnect climate control unit connector B (12P).

19. Turn the ignition switch to ON (II), and measure the voltage between climate control unit connector B (12P) No. 12 terminal and body ground.

CLIMATE CONTROL UNIT CONNECTOR B (12P)

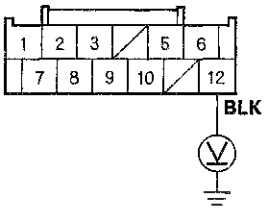

Wire side of female terminals

Is there about 5 V?

YES—Go to step 20.

NO—Check for a loose wire or poor connection at climate control unit connector B (12P). If the connection is good, substitute a known-good climate control unit and recheck. If the symptom/indication goes away, replace the original climate control unit. ■

20. While checking the same terminal for voltage to ground, reconnect these items individually and note the voltage reading each time:

- Driver's air mix control motor
- Passenger's air mix control motor
- Recirculation control motor
- Mode control motor

CLIMATE CONTROL UNIT CONNECTOR B (12P)

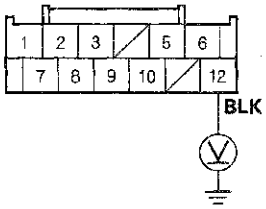

Wire side of female terminals

Does the voltage remain at about 5 V?

YES—Substitute a known-good climate control unit and recheck. If the symptom/indication goes away, replace the original climate control unit. ■

NO—Replace the component that caused the voltage drop. ■

DTC B1235 or DTC indicator C and A/C ON: A Problem in the Driver's Air Mix Control Linkage, Door, or Motor Circuit

1. Clear the DTC with the HDS.

2. Turn the ignition switch to LOCK (0), and then to ON (II).

3. Do the self-diagnostic function with the HDS (see page 21-100) or climate control unit (see page 21-101).

4. Check for DTCs.

   Is DTC B1235 or C and A/C ON indicated?

   YES—Go to step 5.

   NO—Intermittent failure, check for loose wires or poor connections on the driver's air mix control motor circuit.■

5. Turn the ignition switch to LOCK (0).

6. Test the driver's air mix control motor (see page 21-56).

   Is the driver's air mix control motor OK?

   YES—Go to step 7.

   NO—Replace the driver's air mix control motor (see page 21-57), or repair the driver's air mix control linkage or door.■

7. Disconnect the driver's air mix control motor 7P connector.

8. Disconnect climate control unit connector A (28P).

9. Check for continuity between the following terminals of climate control unit connector A (28P) and the driver's air mix control motor 7P connector.

28P:	7P:
No. 4	No. 2
No. 6	No. 1

CLIMATE CONTROL UNIT CONNECTOR A (28P)
Wire side of female terminals

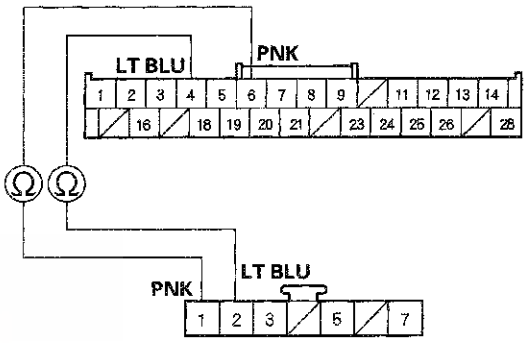

DRIVER'S AIR MIX CONTROL MOTOR 7P CONNECTOR
Wire side of female terminals

Is there continuity?

YES—Go to step 10.

NO—Repair open in the wire(s) between the climate control unit and the driver's air mix control motor.■

(cont'd)

DTC Troubleshooting (cont'd)

10. Check for continuity between body ground and climate control unit connector A (28P) No. 4 and No. 6 terminals individually.

CLIMATE CONTROL UNIT CONNECTOR A (28P)

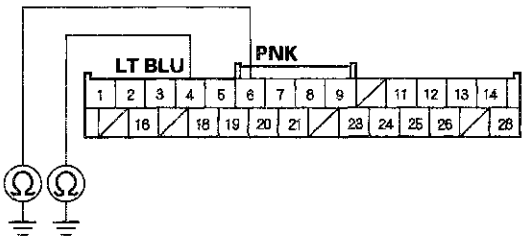

Wire side of female terminals

Is there continuity?

YES—Repair short to body ground in the wire(s) between the climate control unit and the driver's air mix control motor. ■

NO—Substitute a known-good climate control unit, and recheck. If the symptom/indication goes away, replace the original climate control unit. ■

DTC B1236 or DTC indicator D and A/C ON: An Open in the Passenger's Air Mix Control Motor Circuit

1. Clear the DTC with the HDS.
2. Turn the ignition switch to LOCK (0), and then to ON (II).
3. Do the self-diagnostic function with the HDS (see page 21-100) or climate control unit (see page 21-101).
4. Check for DTCs.

   Is DTC B1236 or D and A/C ON indicated?

   YES—Go to step 5.

   NO—Intermittent failure, check for loose wires or poor connections on the passenger's air mix control motor circuit. ■
5. Turn the ignition switch to LOCK (0).
6. Test the passenger's air mix control motor (see page 21-177).

   Is the passenger's air mix control motor OK?

   YES—Go to step 7.

   NO—Replace the passenger's air mix control motor (see page 21-178). ■
7. Disconnect the passenger's air mix control motor 7P connector.
8. Disconnect climate control unit connectors A (28P) and B (12P).

9. Check for continuity between the following terminals of climate control unit connectors A (28P), B (12P), and the passenger's air mix control motor 7P connector.

28P:	7P:
No. 13	No. 3

12P:	7P:
No. 10	No. 5
No. 12	No. 7

CLIMATE CONTROL UNIT CONNECTOR A (28P)
Wire side of female terminals

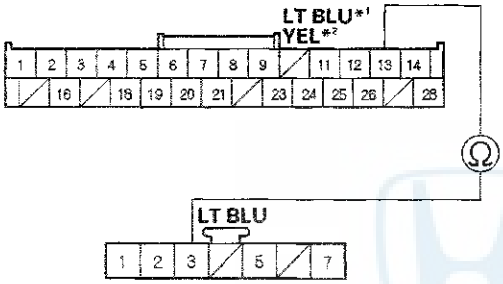

PASSENGER'S AIR MIX CONTROL MOTOR 7P CONNECTOR
Wire side of female terminals

***1: With navigation**
***2: Without navigation**

CLIMATE CONTROL UNIT CONNECTOR B (12P)
Wire side of female terminals

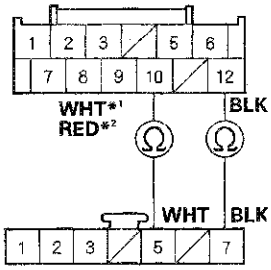

PASSENGER'S AIR MIX CONTROL MOTOR 7P CONNECTOR
Wire side of female terminals

***1: With navigation**
***2: Without navigation**

Is there continuity?

YES—Check for loose wires or poor connections at climate control unit connectors A (28P), B (12P), and at the passenger's air mix control motor 7P connector. If the connections are good, substitute a known-good climate control unit and recheck. If the symptom/indication goes away, replace the original climate control unit. ■

NO—Repair open in the wire(s) between the climate control unit and the passenger's air mix control motor. ■

DTC Troubleshooting (cont'd)

DTC B1237 or DTC indicator E and A/C ON: A Short in the Passenger's Air Mix Control Motor Circuit

1. Clear the DTC with the HDS.

2. Turn the ignition switch to LOCK (0), and then to ON (II).

3. Do the self-diagnostic function with the HDS (see page 21-100) or climate control unit (see page 21-101).

4. Check for DTCs.

   Is DTC B1237 or E and A/C ON indicated?

   YES—Go to step 5.

   NO—Intermittent failure. Check for loose wires or poor connections on the passenger's air mix control motor circuit. ■

5. Check for DTCs.

   Are these DTCs also present; B121B or H and A/C ON, and/or B1220 or L and A/C ON, and/or B1234 or B and A/C ON?

   YES—Go to step 13.

   NO—Go to step 6.

6. Turn the ignition switch to LOCK (0).

7. Test the passenger's air mix control motor (see page 21-177).

   Is the passenger's air mix control motor OK?

   YES—Go to step 8.

   NO—Replace the passenger's air mix control motor (see page 21-178). ■

8. Disconnect the passenger's air mix control motor 7P connector.

9. Disconnect climate control unit connectors A (28P) and B (12P).

10. Check for continuity between body ground and climate control unit connector A (28P) No. 13 terminal.

CLIMATE CONTROL UNIT CONNECTOR A (28P)

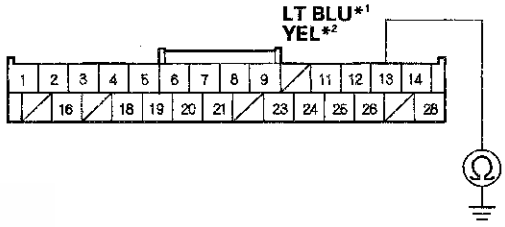

Wire side of female terminals

***1: With navigation**
***2: Without navigation**

Is there continuity?

YES—Repair short to body ground in the wire between the climate control unit and the passenger's air mix control motor. ■

NO—Go to step 11.

11. Check for continuity between climate control unit connector A (28P) terminal No. 13 and climate control unit connector B (12P) terminal No. 12.

CLIMATE CONTROL UNIT CONNECTOR A (28P)
Wire side of female terminals

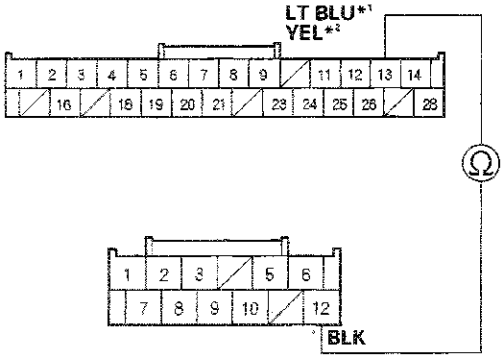

CLIMATE CONTROL UNIT CONNECTOR B (12P)
Wire side of female terminals

***1: With navigation**
***2: Without navigation**

Is there continuity?

YES—Repair open in the wire. ■

NO—Go to step 12.

12. Turn the ignition switch to ON (II), and measure the voltage between climate control unit connector A (28P) terminal No. 13 and body ground.

CLIMATE CONTROL UNIT CONNECTOR A (28P)

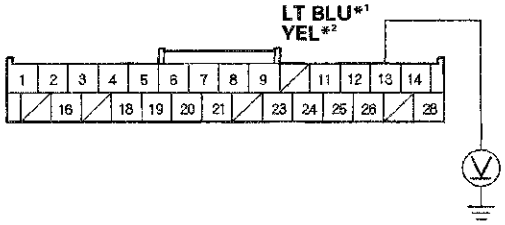

Wire side of female terminals

***1: With navigation**
***2: Without navigation**

Is there any voltage?

YES—Repair short to power in the wire(s) between the climate control unit and the passenger's air mix control motor. This short may also damage the climate control unit. Repair short to power before replacing the climate control unit. ■

NO—Substitute a known-good climate control unit, and recheck. If the symptom/indication goes away, replace the original climate control unit. ■

13. Turn the ignition switch to LOCK (0), and disconnect the climate control unit connector B (12P).

14. Disconnect these items:

- Driver's air mix control motor
- Passenger's air mix control motor
- Recirculation control motor
- Mode control motor

(cont'd)

DTC Troubleshooting (cont'd)

15. Check for continuity between climate control unit connector B (12P) No. 12 terminal and body ground.

CLIMATE CONTROL UNIT CONNECTOR B (12P)

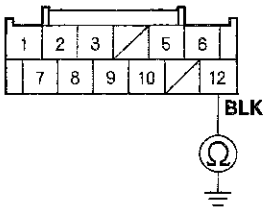

Wire side of female terminals

Is there continuity?

YES—Repair short to body ground in the wire.■

NO—Go to step 16.

16. Turn the ignition switch to ON (II), and check the same terminal for voltage between the terminal and body ground.

CLIMATE CONTROL UNIT CONNECTOR B (12P)

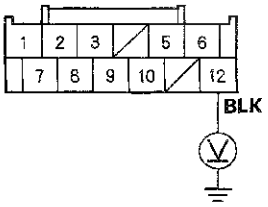

Wire side of female terminals

Is there any voltage?

YES—Repair short to power in the wire. This short may have also damaged the climate control unit. Repair short to power before replacing the climate control unit.■

NO—Go to step 17.

17. Turn the ignition switch to LOCK (0).

18. Reconnect climate control unit connector B (12P).

19. Turn the ignition switch to ON (II), and measure the voltage between climate control unit connector B (12P) No. 12 terminal and body ground.

CLIMATE CONTROL UNIT CONNECTOR B (12P)

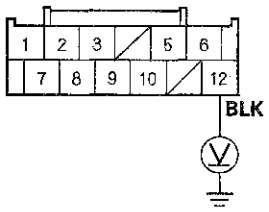

Wire side of female terminals

Is there about 5 V?

YES—Go to step 20.

NO—Check for a loose wire or poor connection at climate control unit connector B (12P). If the connection is good, substitute a known-good climate control unit and recheck. If the symptom/indication goes away, replace the original climate control unit.■

20. While checking the same terminal for voltage to ground, reconnect these items individually and note the voltage reading each time:

- Driver's air mix control motor
- Passenger's air mix control motor
- Recirculation control motor
- Mode control motor

CLIMATE CONTROL UNIT CONNECTOR B (12P)

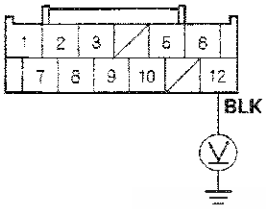

Wire side of female terminals

Does the voltage remain at about 5 V?

YES—Substitute a known-good climate control unit and recheck. If the symptom/indication goes away, replace the original climate control unit.■

NO—Replace the component that caused the voltage drop.■

DTC B1238 or DTC indicator F and A/C ON: A Problem in the Passenger's Air Mix Control Linkage, Door, or Motor Circuit

1. Clear the DTC with the HDS.

2. Turn the ignition switch to LOCK (0), and then to ON (II).

3. Do the self-diagnostic function with the HDS (see page 21-100) or climate control unit (see page 21-101).

4. Check for DTCs.

   Is DTC B1238 or F and A/C ON indicated?

   YES—Go to step 5.

   NO—Intermittent failure, check for loose wires or poor connections on the passenger's air mix control motor circuit.■

5. Turn the ignition switch to LOCK (0).

6. Test the passenger's air mix control motor (see page 21-177).

   Is the passenger's air mix control motor OK?

   YES—Go to step 7.

   NO—Replace the passenger's air mix control motor (see page 21-178), or repair the passenger's air mix control linkage or door.■

7. Disconnect the passenger's air mix control motor 7P connector.

8. Disconnect climate control unit connector A (28P).

(cont'd)

DTC Troubleshooting (cont'd)

9. Check for continuity between the following terminals of climate control unit connector A (28P) and the passenger's air mix control motor 7P connector.

28P:	7P:
No. 1	No. 2
No. 2	No. 1

CLIMATE CONTROL UNIT CONNECTOR A (28P)
Wire side of female terminals

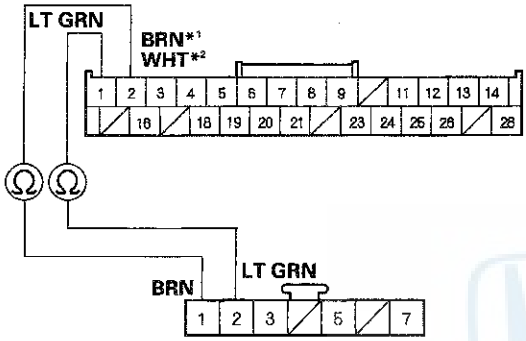

PASSENGER'S AIR MIX CONTROL MOTOR 7P CONNECTOR
Wire side of female terminals

***1: With navigation**
***2: Without navigation**

Is there continuity?

YES—Go to step 10.

NO—Repair open in the wire(s) between the climate control unit and the passenger's air mix control motor.■

10. Check for continuity between body ground and climate control unit connector A (28P) No. 1 and No. 2 terminals individually.

CLIMATE CONTROL UNIT CONNECTOR A (28P)

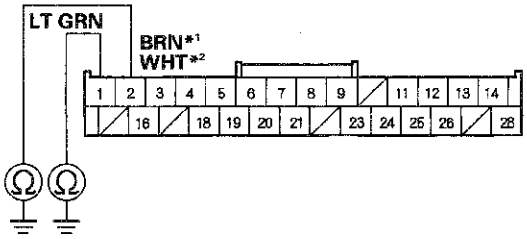

Wire side of female terminals

***1: With navigation**
***2: Without navigation**

Is there continuity?

YES—Repair short to body ground in the wire(s) between the climate control unit and the passenger's air mix control motor.■

NO—Substitute a known-good climate control unit, and recheck. If the symptom/indication goes away, replace the original climate control unit.■

DTC B1241 or DTC indicator N and A/C ON:
A Problem in the Blower Motor Circuit

1. Clear the DTC with the HDS.

2. Turn the ignition switch to LOCK (0), and then to ON (II).

3. Do the self-diagnostic function with the HDS (see page 21-100) or climate control unit (see page 21-101).

4. Check for DTCs.

   Is DTC B1241 or N and A/C ON indicated?

   YES—Go to step 5.

   NO—Intermittent failure, check for loose wires or poor connections on the blower motor circuit. ■

5. Turn the ignition switch to LOCK (0).

6. Check the No. 8 (40 A) fuse in the under-hood fuse/relay box, and the No. 16 (7.5 A) fuse in the driver's under-dash fuse/relay box.

   Are the fuses OK?

   YES—Go to step 7.

   NO—Replace the fuses, and recheck. ■

7. Connect the blower motor 2P connector No. 2 terminal to body ground with a jumper wire.

BLOWER MOTOR 2P CONNECTOR

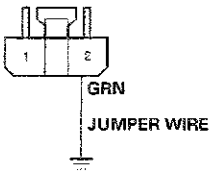

Wire side of female terminals

8. Turn the ignition switch to ON (II).

   Does the blower motor run?

   YES—Go to step 9.

   NO—Go to step 25.

9. Turn the ignition switch to LOCK (0).

10. Disconnect the jumper wire.

11. Disconnect the power transistor 4P connector.

12. Check for continuity between the power transistor 4P connector No. 2 terminal and body ground.

POWER TRANSISTOR 4P CONNECTOR

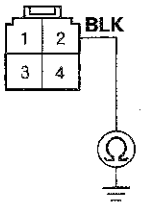

Wire side of female terminals

   Is there continuity?

   YES—Go to step 13.

   NO—Check for an open in the BLK wire between the power transistor and body ground. If the wire is OK, check for poor ground at G302. ■

13. Connect the power transistor 4P connector No. 2 and No. 4 terminals with a jumper wire.

POWER TRANSISTOR 4P CONNECTOR

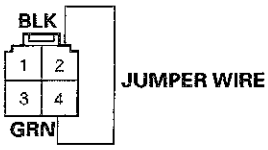

Wire side of female terminals

(cont'd)

DTC Troubleshooting (cont'd)

14. Turn the ignition switch to ON (II).

    Does the blower motor run at high speed?

    YES—Go to step 15.

    NO—Repair open in the GRN wire between the power transistor and the blower motor.■

15. Turn the ignition switch to LOCK (0).

16. Disconnect the jumper wire.

17. Disconnect climate control unit connector B (12P).

18. Check for continuity between body ground and the climate control unit connector B (12P) No. 5 and No. 6 terminals individually.

CLIMATE CONTROL UNIT CONNECTOR B (12P)

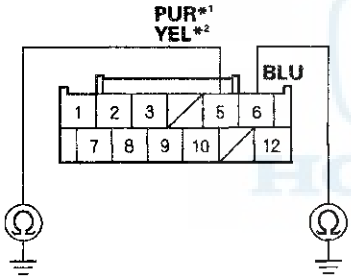

Wire side of female terminals

***1: With navigation**
***2: Without navigation**

Is there continuity?

YES—Repair short to body ground in the wire(s) between the climate control unit and the power transistor.■

NO—Go to step 19.

19. Check for continuity between the following terminals of the climate control unit connector B (12P) and the power transistor 4P connector.

12P:	4P:
No. 5	No. 1
No. 6	No. 3

CLIMATE CONTROL UNIT CONNECTOR B (12P)
Wire side of female terminals

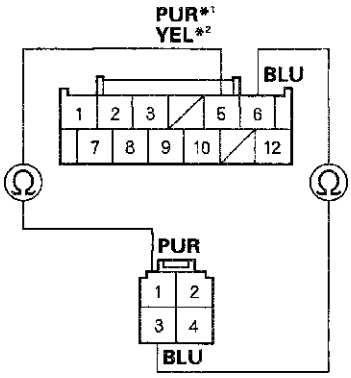

POWER TRANSISTOR 4P CONNECTOR
Wire side of female terminals

***1: With navigation**
***2: Without navigation**

Is there continuity?

YES—Go to step 20.

NO—Repair open in the wire(s) between the climate control unit and the power transistor.■

20. Turn the ignition switch to ON (II).

21. Measure the voltage between body ground and the climate control unit connector B (12P) No. 5 and No. 6 terminals individually.

CLIMATE CONTROL UNIT CONNECTOR B (12P)

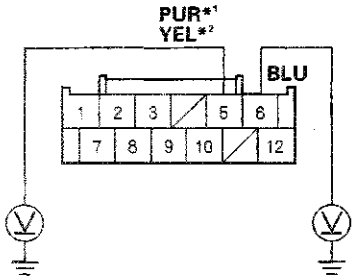

Wire side of female terminals

***1: With navigation**
***2: Without navigation**

Is there voltage?

YES—Repair short to power in the wire(s).■

NO—Go to step 22.

22. Turn the ignition switch to LOCK (0).

23. Reconnect climate control unit connector B (12P).

24. Test the power transistor (see page 21-55).

Is the power transistor OK?

YES—Check for loose wires or poor connections at the climate control unit connector B (12P) and at the power transistor 4P connector. If the connections are good, substitute a known-good climate control unit, and recheck. If the symptom/indication goes away, replace the original climate control unit.■

NO—Replace the power transistor.■

25. Disconnect the jumper wire.

26. Disconnect the blower motor 2P connector.

27. Measure the voltage between the blower motor 2P connector No. 1 terminal and body ground.

BLOWER MOTOR 2P CONNECTOR

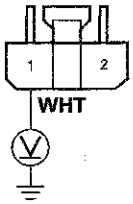

Wire side of female terminals

Is there battery voltage?

YES—Replace the blower motor.■

NO—Go to step 28.

28. Turn the ignition switch to LOCK (0).

29. Remove the blower motor relay from the under-hood fuse/relay box, and test it (see page 22-91).

Is the relay OK?

YES—Go to step 30.

NO—Replace the blower motor relay.■

(cont'd)

DTC Troubleshooting (cont'd)

30. Check for continuity between the blower motor relay 4P socket No. 2 terminal and blower motor 2P connector No. 1 terminal.

BLOWER MOTOR RELAY 4P SOCKET

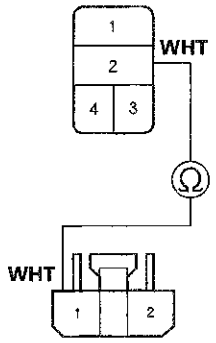

BLOWER MOTOR 2P CONNECTOR
Wire side of female terminals

Is there continuity?

YES—Go to step 31.

NO—Repair open in the wire between the blower motor relay and blower motor.■

31. Measure the voltage between the blower motor relay 4P socket No. 1 terminal and body ground.

BLOWER MOTOR RELAY 4P SOCKET

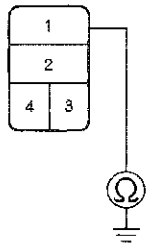

Is there battery voltage?

YES—Go to step 32.

NO—Replace the under-hood fuse/relay box (see page 22-83).■

32. Turn the ignition switch to ON (II).

33. Measure the voltage between blower motor relay 4P socket No. 4 terminal and body ground.

BLOWER MOTOR RELAY 4P SOCKET

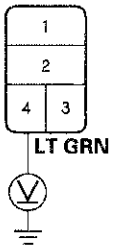

Is there battery voltage?

YES—Check for an open in the wire between the blower motor relay 4P socket No. 4 terminal and body ground. If the wire is OK, check for poor ground at G301 (see page 22-28).■

NO—Repair open in the wire between the No. 16 (7.5 A) fuse in the driver's under-dash fuse/relay box and blower motor relay 4P socket.■

DTC B2983 or DTC indicator M and A/C ON: A Problem in the Recirculation Control Linkage, Door, or Motor Circuit

1. Clear the DTC with the HDS.

2. Turn the ignition switch to LOCK (0), and then to ON (II).

3. Do the self-diagnostic function with the HDS (see page 21-100) or climate control unit (see page 21-101).

4. Check the DTCs.

   Is DTC B2983 or M and A/C ON indicated?

   YES—Go to step 5.

   NO—Intermittent failure, check for loose wires or poor connections on the recirculation control motor circuit. ■

5. Turn the ignition switch to LOCK (0).

6. Test the recirculation control motor (see page 21-179).

   Is the recirculation control motor OK?

   YES—Go to step 7.

   NO—Replace the recirculation control motor (see page 21-61), or repair the recirculation control linkage or door. ■

7. Disconnect the recirculation control motor 7P connector.

8. Disconnect climate control unit connector A (28P).

9. Check for continuity between the following terminals of climate control unit connector A (28P) and the recirculation control motor 7P connector.

28P:	7P:
No. 3	No. 1
No. 5	No. 2

CLIMATE CONTROL UNIT CONNECTOR A (28P)
Wire side of female terminals

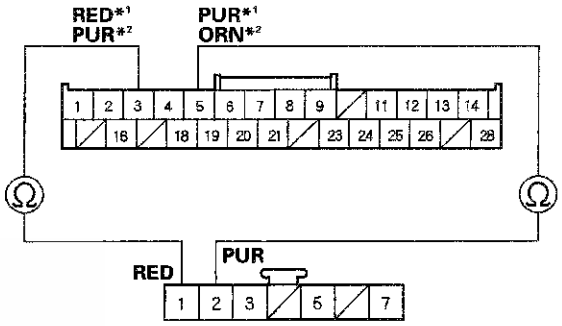

RECIRCULATION CONTROL MOTOR 7P CONNECTOR
Wire side of female terminals

***1: With navigation**
***2: Without navigation**

Is there continuity?

YES—Go to step 10.

NO—Repair open in the wire(s) between the climate control unit and the recirculation control motor. ■

(cont'd)

DTC Troubleshooting (cont'd)

10. Check for continuity between body ground and climate control unit connector A (28P) No. 3 and No. 5 terminals individually.

CLIMATE CONTROL UNIT CONNECTOR A (28P)

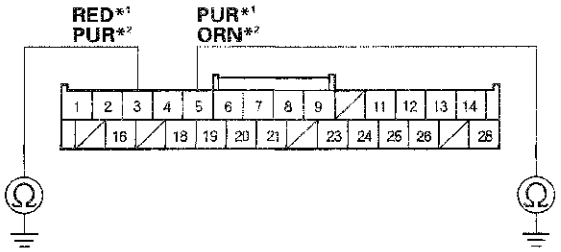

Wire side of female terminals

***1: With navigation**
***2: Without navigation**

Is there continuity?

YES—Repair short to body ground in the wire(s) between the climate control unit and the recirculation control motor. ■

NO—Substitute a known-good climate control unit, and recheck. If the symptom/indication goes away, replace the original climate control unit. ■

DTC B2986 or DTC indicator K and A/C ON: An Open in the Recirculation Control Motor Circuit

1. Clear the DTC with the HDS.
2. Turn the ignition switch to LOCK (0), and then to ON (II).
3. Do the self-diagnostic function with the HDS (see page 21-100) or climate control unit (see page 21-101).
4. Check for DTCs.

   Is DTC B2986 or K and A/C ON indicated?

   YES—Go to step 5.

   NO—Intermittent failure, check for loose wires or poor connections on the recirculation control motor circuit. ■

5. Turn the ignition switch to LOCK (0).
6. Test the recirculation control motor (see page 21-179).

   Is the recirculation control motor OK?

   YES—Go to step 7.

   NO—Replace the recirculation control motor (see page 21-61). ■

7. Disconnect the recirculation control motor 7P connector.
8. Disconnect climate control unit connectors A (28P) and B (12P).

9. Check for continuity between the following terminals of climate control unit connectors A (28P), B (12P), and the recirculation control motor 7P connector.

28P:	7P:
No. 12	No. 3

12P:	7P:
No. 10	No. 5
No. 12	No. 7

CLIMATE CONTROL UNIT CONNECTOR A (28P)
Wire side of female terminals

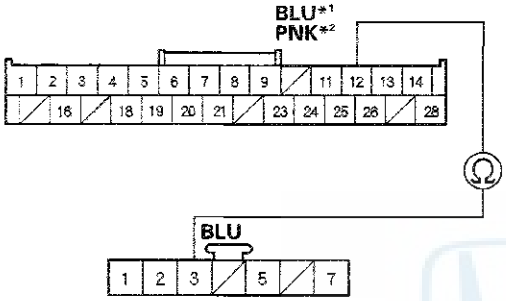

RECIRCULATION CONTROL MOTOR 7P CONNECTOR
Wire side of female terminals

***1: With navigation**
***2: Without navigation**

CLIMATE CONTROL UNIT CONNECTOR B (12P)
Wire side of female terminals

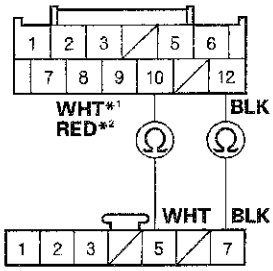

RECIRCULATION CONTROL MOTOR 7P CONNECTOR
Wire side of female terminals

***1: With navigation**
***2: Without navigation**

Is there continuity?

YES—Check for loose wires or poor connections at climate control unit connectors A (28P), B (12P), and at the recirculation control motor 7P connector. If the connections are good, substitute a known-good climate control unit and recheck. If the symptom/indication goes away, replace the original climate control unit. ■

NO—Repair open in the wire(s) between the climate control unit and the recirculation control motor. ■

Climate Control Power and Ground Circuit Troubleshooting

1. Check the No. 16 (7.5 A) fuse in the driver's under-dash fuse/relay box.

   Is the fuse OK?

   YES—Go to step 2.

   NO—Replace the fuse, and recheck. If the fuse blows again, check for a short in the No. 16 (7.5 A) fuse circuit. ■

2. Disconnect climate control unit connector A (28P).

3. Turn the ignition switch to ON (II).

4. Measure the voltage between climate control unit connector A (28P) terminal No. 9 and body ground.

CLIMATE CONTROL UNIT CONNECTOR A (28P)

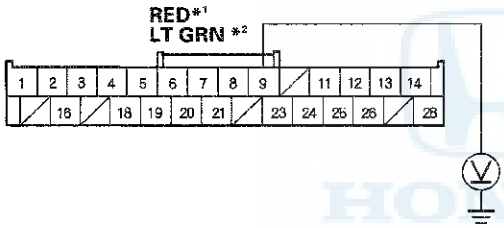

Wire side of female terminals

***1: With navigation**
***2: Without navigation**

Is there battery voltage?

YES—Go to step 5.

NO—Repair open in the wire between the No. 16 (7.5 A) fuse in the driver's under-dash fuse/relay box and the climate control unit. ■

5. Turn the ignition switch to LOCK (0).

6. Check for continuity between the climate control unit connector B (12P) terminal No. 3 and body ground.

CLIMATE CONTROL UNIT CONNECTOR B (12P)

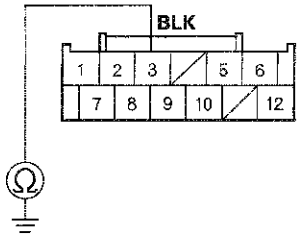

Wire side of female terminals

Is there continuity?

YES—Check for loose wires or poor connections at climate control unit connector B (12P). If the connections are good, substitute a known-good climate control unit, and recheck. ■

NO—Check for an open in the wire between the climate control unit and body ground. If the wire is OK, check for poor ground at G401 (with navigation and premium audio: see page 22-40, with premium audio: see page 22-42, without premium audio: see see page 22-44). ■

Navigation Communication Line Circuit Troubleshooting

1. Operate the climate control system in several modes.

   Is the climate control system OK?

   YES—Go to step 2.

   NO—Do the self-diagnostic function with the HDS (see page 21-100) or climate control unit (see page 21-101). ■

2. Do the Navi system links (see page 23-170).

   Is the Air-Con or TALK/BACK icon red?

   YES—
   - If Air-con icon is red, go to step 3.
   - If TALK/BACK icon is red, go to "voice control does not work/respond" in the navigation system symptom troubleshooting (see page 23-227). ■

   NO—Go to step 9.

3. Turn the ignition switch to LOCK (0).

4. Disconnect navigation unit connector B (32P).

5. Disconnect climate control unit connector B (12P).

6. Check for continuity between the following terminals of climate control unit connector B (12P) and navigation unit connector B (32P).

12P:	32P:
No. 7	No. 20
No. 8	No. 4
No. 9	No. 21

CLIMATE CONTROL UNIT CONNECTOR B (12P)
Wire side of female terminals

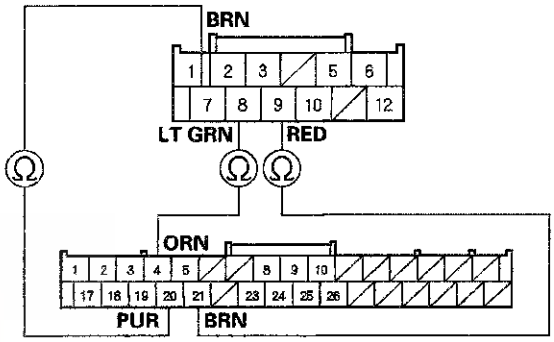

NAVIGATION UNIT CONNECTOR B (32P)
Wire side of female terminals

Is there continuity?

YES—Go to step 7.

NO—Repair open in the wire(s) between the climate control unit and the navigation unit. ■

(cont'd)

Navigation Communication Line Circuit Troubleshooting (cont'd)

7. Check for continuity between body ground and the climate control unit connector B (12P) No. 7, 8, and No. 9 terminals individually.

CLIMATE CONTROL UNIT CONNECTOR B (12P)

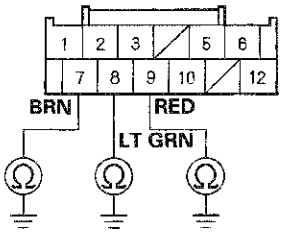

Wire side of female terminals

Is there continuity?

YES—Repair short to body ground in the wire(s) between the climate control unit and the navigation unit. ■

NO—Go to step 8.

8. Reconnect climate control unit connector B (12P).

9. Disconnect navigation unit connector B (32P).

10. Connect the navigation unit connector B (32P) No. 4, 20, and No. 21 terminals with jumper wires.

NAVIGATION UNIT CONNECTOR B (32P)

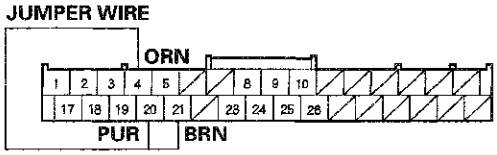

Wire side of female terminals

11. Turn the ignition switch to ON (II).

12. Press and hold the AUTO button, then press and hold the OFF button.

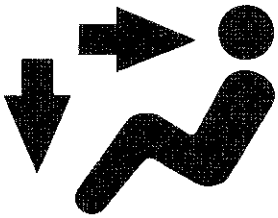

Is the HEAT/VENT indicator solid with the remaining icons blinking?

YES—Do the Unit check with the navigation system (see page 23-177). ■

NO—Substitute a known-good climate control unit, and recheck. If the symptom goes away, replace the original climate control unit. ■

Audio Communication Line Circuit Troubleshooting

1. Turn the ignition switch to LOCK (0).

2. Disconnect climate control unit connector A (28P) and the audio-HVAC subdisplay 12P connector (with navigation) or the audio-HVAC display unit 12P connector (without navigation).

3. Check for continuity between the following terminals of climate control unit connector A (28P) and the audio-HVAC subdisplay or display unit 12P connector.

28P:	12P:
No. 19	No. 7
No. 20	No. 8

CLIMATE CONTROL UNIT CONNECTOR A (28P)
Wire side of female terminals

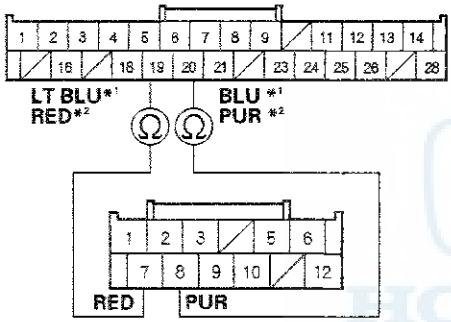

AUDIO-HVAC SUBDISPLAY UNIT 12P CONNECTOR*1
AUDIO-HVAC DISPLAY UNIT 12P CONNECTOR*2
Wire side of female terminals

***1: With navigation**
***2: Without navigation**

Is there continuity?

YES—Go to step 4.

NO—Repair open in the wire between climate control unit connector A (28P) and the audio-HVAC subdisplay or display unit 12P connector. ■

4. Check for continuity between body ground and climate control unit connector A (28P) terminals No. 19 and No. 20 individually.

CLIMATE CONTROL UNIT CONNECTOR A (28P)

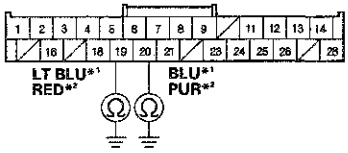

Wire side of female terminals

***1: With navigation**
***2: Without navigation**

Is there continuity?

YES—Repair short to body ground in the wire between climate control unit connector A (28P) and the audio-HVAC subdisplay or display unit 12P connector. ■

NO—Go to step 5.

5. Reconnect climate control unit connector A (28P).

6. Connect audio-HVAC subdisplay or display unit 12P connector terminals No. 7 and No. 8 with a jumper wire.

AUDIO-HVAC SUBDISPLAY UNIT 12P CONNECTOR*1
AUDIO-HVAC DISPLAY UNIT 12P CONNECTOR*2

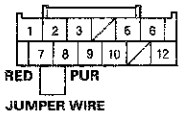

Wire side of female terminals

***1: With navigation**
***2: Without navigation**

7. Turn the ignition switch to ON (II).

8. Press and hold the DEF button and OFF button.

Is the DEF button LED blinking?

YES—Audio-HVAC subdisplay unit or display unit is faulty, replace the audio-HVAC subdisplay unit (see page 23-114) or audio-HVAC display unit (see page 23-114). ■

NO—Climate control unit is faulty, replace the climate control unit (see page 21-180). ■

Climate Control Switch Communication Line Circuit Troubleshooting

1. Operate the climate control system with the passenger's climate control switch in all modes.

   Does the climate control system operate?

   YES—Intermittent failure. Check for loose wires or poor connections at the driver's and passenger's climate control switches, and at the climate control unit. ■

   NO—Go to step 2.

2. Operate the climate control system with the driver's climate control switch in all modes.

   Does the climate control system operate?

   YES—Go to step 3.

   NO—Go to step 11.

3. Turn the ignition switch to LOCK (0).

4. Disconnect the passenger's climate control switch 12P connector.

5. Turn the ignition switch to ON (II).

6. Measure the voltage between body ground and the passenger's climate control switch 12P connector No. 1 terminal.

PASSENGER'S CLIMATE CONTROL SWITCH 12P CONNECTOR

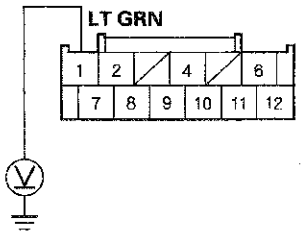

Wire side of female terminals

Is there battery voltage?

YES—Go to step 7.

NO—Repair open in the LT GRN wire. ■

7. Turn the ignition switch to LOCK (0).

8. Disconnect the driver's climate control switch 16P connector.

9. Check for continuity between the following terminals of the passenger's climate control switch 12P connector and the driver's climate control switch 16P connector.

12P:	16P:
No. 7	No. 4
No. 8	No. 3
No. 9	No. 2
No. 10	No. 1
No. 11	No. 5
No. 12	No. 6

PASSENGER'S CLIMATE CONTROL SWITCH 12P CONNECTOR
Wire side of female terminals

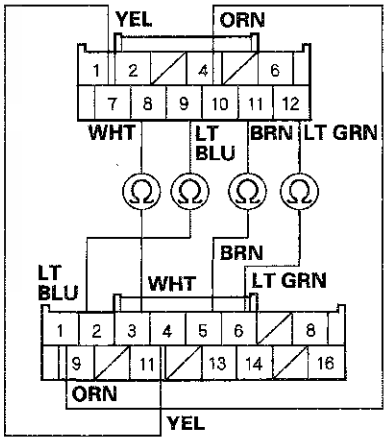

DRIVER'S CLIMATE CONTROL SWITCH 16P CONNECTOR
Wire side of female terminals

Is there continuity?

YES—Go to step 10.

NO—Repair open in the wires between the driver's climate control switch and the passenger's climate control switch. ■

10. Check for continuity between body ground and the passenger's climate control switch 12P connector terminals No. 7, No. 8, No. 9, No. 10, No. 11, and No. 12.

PASSENGER'S CLIMATE CONTROL SWITCH 12P CONNECTOR

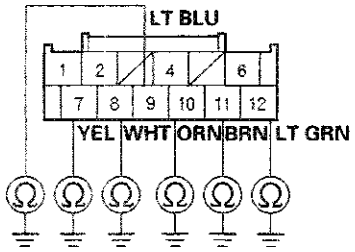

Wire side of female terminals

Is there continuity?

YES—Repair short to body ground in the wire(s) between the driver's climate control switch and the passenger's climate control switch.■

NO—Substitute a known-good passenger's climate control switch, and recheck. If the symptom goes away, replace the original passenger's climate control switch (see page 21-181).■

11. Disconnect the driver's climate control switch 16P connector.

12. Turn the ignition switch to ON (II).

13. Measure the voltage between body ground and the driver's climate control switch 16P connector No. 11 terminal.

DRIVER'S CLIMATE CONTROL SWITCH 16P CONNECTOR

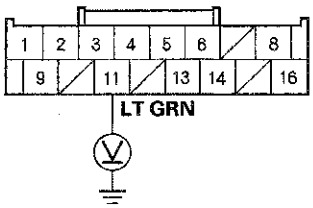

Wire side of female terminals

Is there battery voltage?

YES—Go to step 14.

NO—Repair open in the wire between the driver's climate control switch and the No. 16 (7.5 A) fuse in the driver's under-dash fuse/relay box.■

14. Turn the ignition switch to LOCK (0).

(cont'd)

Climate Control Switch Communication Line Circuit Troubleshooting (cont'd)

15. Check for continuity between body ground and driver's climate control switch 16P connector terminal No. 14.

DRIVER'S CLIMATE CONTROL SWITCH 16P CONNECTOR

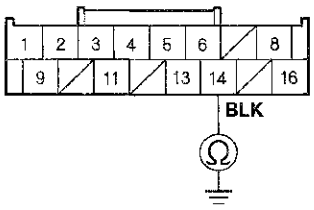

Wire side of female terminals

Is there continuity?

YES—Go to step 16.

NO—Check for an open in the wire between the driver's climate control switch and body ground. If the wire is OK, check for poor ground at G401 (with navigation and premium audio: see page 22-40, with premium audio: see page 22-42, without premium audio: see page 22-44). ■

16. Disconnect climate control unit connector A (28P).

17. Check for continuity between driver's climate control switch 16P connector terminal No. 13 and climate control unit connector A (28P) terminal No. 28.

DRIVER'S CLIMATE CONTROL SWITCH 16P CONNECTOR
Wire side of female terminals

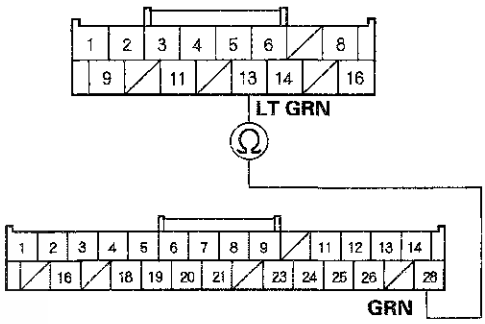

CLIMATE CONTROL UNIT CONNECTOR A (28P)
Wire side of female terminals

Is there continuity?

YES—Go to step 18.

NO—Repair open in the wire between the driver's climate control switch and the climate control unit. ■

18. Check for continuity between driver's climate control switch 16P connector No. 13 and No. 14 terminals.

DRIVER'S CLIMATE CONTROL SWITCH 16P CONNECTOR

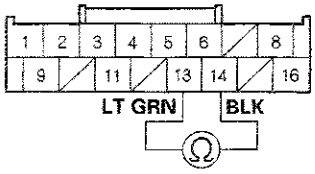

Wire side of female terminals

Is there continuity?

YES—Repair short to another wire.■

NO—Go to step 19.

19. Reconnect the driver's climate control switch 16P connector.

20. Reconnect climate control unit connector A (28P).

21. Press and hold the FAN UP switch, then press the OFF switch.

Is the REC button LED blinking?

YES—Go to step 22.

NO—Substitute a known-good driver's climate control switch, and recheck the function. If the symptom is still present, replace the climate control unit.■

22. Check the driver's climate control switch LEDs.

Are the REC button and AUTO button LEDs blinking?

YES—Driver's climate control switch is faulty, replace the driver's climate control switch (see page 21-181).■

NO—Go to step 23.

23. Check the driver's climate control switch LEDs.

Are the REC button and DUAL button LEDs blinking?

YES—Substitute a known-good driver's climate control switch, and recheck the function. If the symptom is still present, replace the climate control unit.■

NO—Check for loose wires or poor connections at climate control unit connector A (28P) and driver's climate control switch 16P connector. If the connections are good, replace the climate control unit.■

A/C Pressure Switch Circuit Troubleshooting

NOTE:
- If the blower motor does not run at all speeds, the A/C compressor will be inoperative. Run the self-diagnostic function, and check for DTC B1241. Before performing any other troubleshooting, repair the cause of the inoperative blower motor.
- Do not use this troubleshooting procedure if any of the following items are operative: The condenser fan, the radiator fan, or the A/C compressor, or if the heater is inoperative. Refer to the symptom troubleshooting index.
- Check the A/C high-side pressure.
- Before doing symptom troubleshooting, check for powertrain DTCs (see page 11-3). Also check for B-CAN codes (see page 22-96).

1. Turn the ignition switch to ON (II).
2. Check if the blower motor operates at all speeds.

   Does the blower motor operate at all speeds?

   YES—Go to step 3.

   NO—Repair the problem in the blower motor circuit (see page 21-157).■

3. Turn the ignition switch to LOCK (0).
4. Disconnect climate control unit connector A (28P).
5. Turn the ignition switch to ON (II).
6. Measure the voltage between the climate control unit connector A (28P) No. 21 terminal and body ground.

CLIMATE CONTROL UNIT CONNECTOR A (28P)

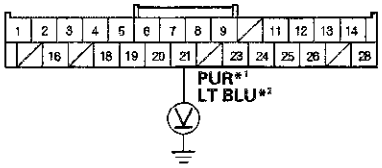

Wire side of female terminals

***1: With navigation**
***2: Without navigation**

Is there battery voltage?

YES—Go to step 14.

NO—Go to step 7.

7. Turn the ignition switch to LOCK (0).
8. Disconnect the A/C pressure switch 2P connector.
9. Turn the ignition switch to ON (II).
10. Measure the voltage between the A/C pressure switch 2P connector No. 2 terminal and body ground.

A/C PRESSURE SWITCH 2P CONNECTOR

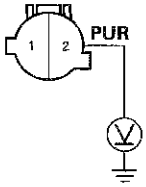

Wire side of female terminals

Is there battery voltage?

YES—Go to step 11.

NO—Repair open in the wire between the A/C pressure switch and the MICU. If the wire is OK, substitute a known-good MICU and recheck. If the symptom goes away, replace the original MICU.■

11. Check for continuity between the No. 1 and No. 2 terminals of the A/C pressure switch.

A/C PRESSURE SWITCH

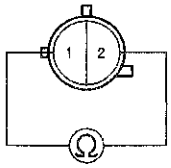

Is there continuity?

YES—Go to step 12.

NO—Replace the A/C pressure switch.■

12. Connect the A/C pressure switch 2P connector No. 2 terminal to body ground with a jumper wire.

A/C PRESSURE SWITCH 2P CONNECTOR

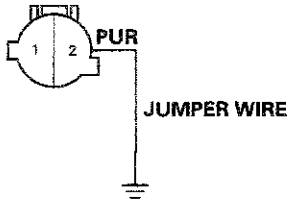

Wire side of female terminals

Do the compressor and fans operate?

YES—Go to step 13.

NO—Check for B-CAN codes (see page 22-96).■

13. Check for continuity between the climate control unit connector A (28P) No. 21 terminal and the A/C pressure switch 2P connector No. 1 terminal.

CLIMATE CONTROL UNIT CONNECTOR A (28P)
Wire side of female terminals

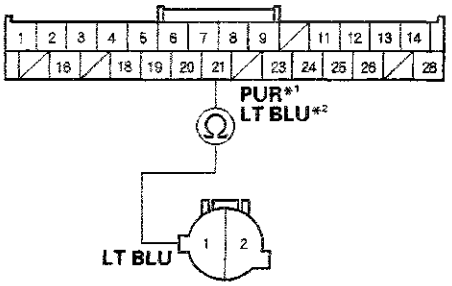

A/C PRESSURE SWITCH 2P CONNECTOR
Wire side of female terminals

***1: With navigation**
***2: Without navigation**

Is there continuity?

YES—Check for loose wires or poor connections at the climate control unit connector A (28P) and at the A/C pressure switch 2P connector.■

NO—Repair open in the wire between the HVAC control unit and A/C pressure switch.■

14. Turn the ignition switch to LOCK (0).

15. Measure the evaporator temperature sensor resistance between the climate control unit connector A (28P) No. 23 terminal and the connector B (12P) No. 10 terminal.

CLIMATE CONTROL UNIT CONNECTOR A (28P)
Wire side of female terminals

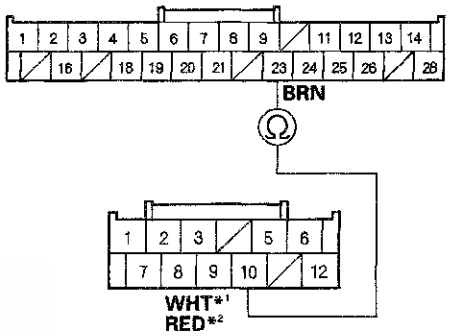

CLIMATE CONTROL UNIT CONNECTOR B (12P)
Wire side of female terminals

***1: With navigation**
***2: Without navigation**

Is the resistance less than 24 kΩ ?

YES—Check for loose wires or poor connections at the climate control unit connectors. If the connections are good, substitute a known-good climate control unit and recheck. If the symptom goes away, replace the original climate control unit.■

NO—Test the evaporator temperature sensor (see page 21-54).■

In-car Temperature Sensor Test

NOTE: Before testing, check for HVAC DTCs (see page 21-99).

1. Remove the in-car temperature sensor (see page 21-174).

2. Test the in-car temperature sensor while holding it in front of the dashboard center vent.

   - Measure the resistance with the system set to Max Cool.
   - Measure the resistance with the system set to Max Hot.

3. Compare the resistance reading between terminals No. 1 and No. 2 of the in-car temperature sensor with the specifications shown in the graph; the resistance should be within the specifications.

IN-CAR TEMPERATURE SENSOR

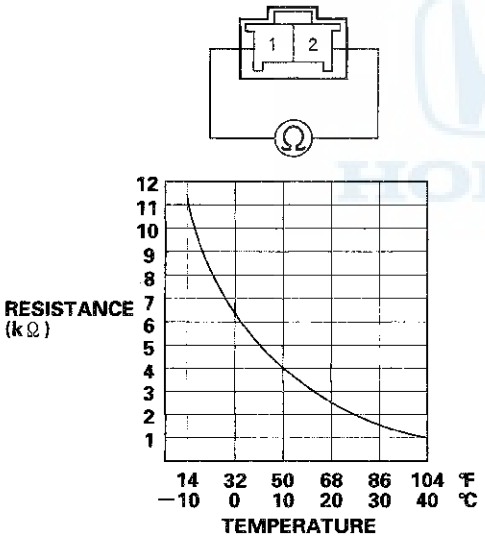

4. If the resistance is not as specified, replace the in-car temperature sensor (see page 21-174).

In-car Temperature Sensor Replacement

1. Remove the driver's inner dashboard trim (see page 20-154).

2. Remove the in-car temperature sensor (A) from the instrument panel (B).

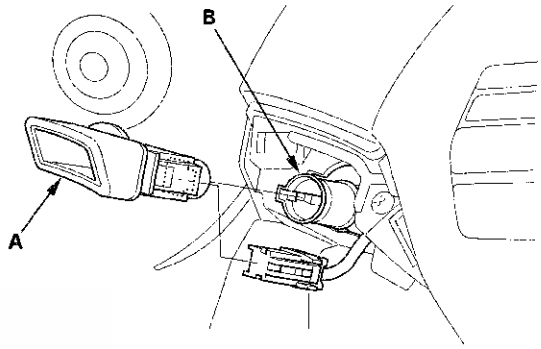

3. Install the sensor in the reverse order of removal. Be sure to connect the air hose securely.

Outside Air Temperature Sensor Test

NOTE: Before testing, check for HVAC DTCs (see page 21-99).

1. Remove the outside air temperature sensor (see page 21-175).

2. Dip the sensor in ice water, and measure the resistance. Then pour warm water on the sensor, and check for a change in resistance.

3. Compare the resistance reading between the No. 1 and No. 2 terminals of the outside air temperature sensor with the specifications shown in the graph; the resistance should be within the specifications.

OUTSIDE AIR TEMPERATURE SENSOR

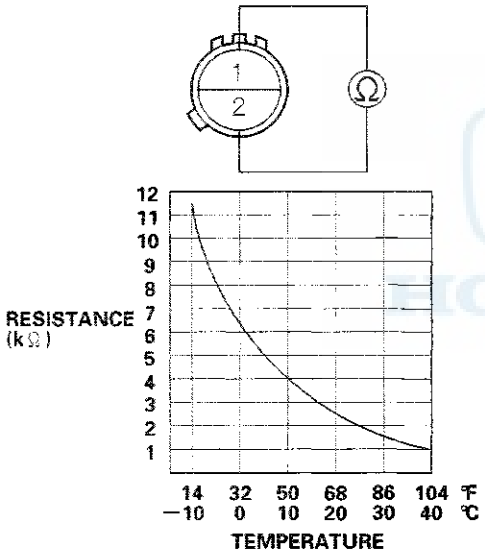

4. If the resistance is not as specified, replace the outside air temperature sensor (see page 21-175).

Outside Air Temperature Sensor Replacement

1. Lift the tab (A) to release the lock, then remove the outside air temperature sensor (B) from the front bumper beam. Disconnect the 2P connector (C) from the outside air temperature sensor.

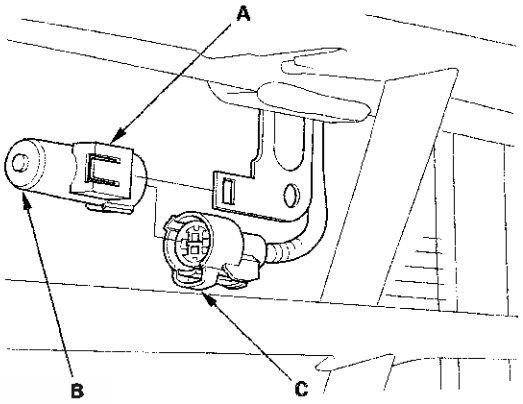

2. Install the sensor in the reverse order of removal.

Sunlight Sensor Test

NOTE: Before testing, check for HVAC DTCs (see page 21-99).

1. Remove the sunlight sensor (see page 21-176).

With automatic lighting sensor

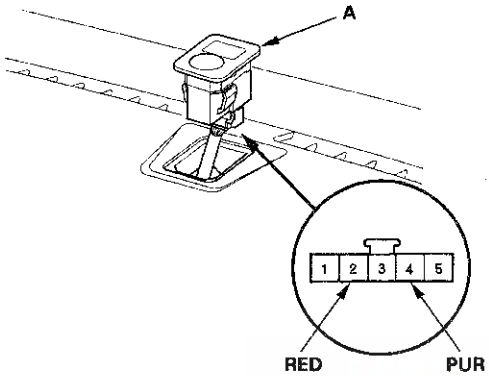

Without automatic lighting sensor

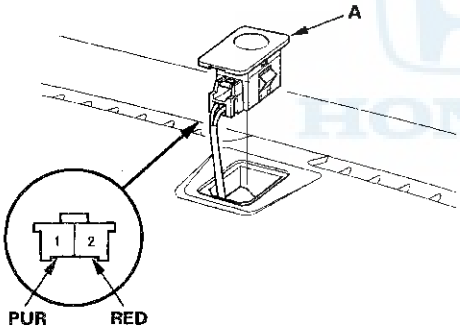

2. Turn the ignition switch to ON (II). Measure the voltage between the terminals with the (+) probe on the No. 4 (with automatic lighting sensor) or No. 1 (without automatic lighting sensor) terminal and the (−) probe on the No. 2 terminal with the connector connected.

   NOTE: The voltage readings will not change under the light of a flashlight or a fluorescent lamp. Voltage should be:

   - 3.6—3.7 V or more with the sensor out of direct sunlight.
   - 3.3—3.5 V or less with the sensor in direct sunlight.

3. If the voltage is not as specified, replace the sunlight sensor (see page 21-176).

Sunlight Sensor Replacement

1. Remove the sunlight sensor (A) from the dashboard, then disconnect the connector (B). Be careful not to damage the sensor and the dashboard.

2. Install the sensor in the reverse order of removal.

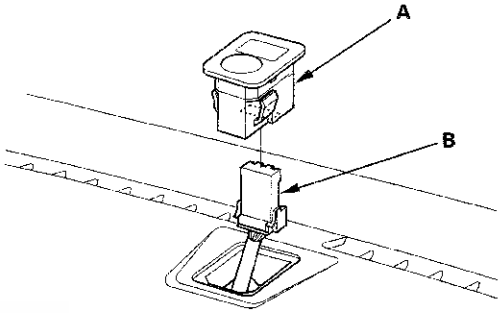

Passenger's Air Mix Control Motor Test

NOTE: Before testing, check for HVAC DTCs (see page 21-99).

1. Disconnect the 7P connector from the passenger's air mix control motor.

   NOTICE
   Incorrectly applying power and ground to the passenger's air mix control motor will damage it. Follow the instructions carefully.

2. Connect battery power to the No. 1 terminal of the passenger's air mix control motor, and ground the No. 2 terminal; the passenger's air mix control motor should run, and stop at Max Cool. If it doesn't, reverse the connections; the passenger's air mix control motor should run, and stop at Max Hot. When the passenger's air mix control motor stops running, disconnect battery power immediately.

PASSENGER'S AIR MIX CONTROL MOTOR

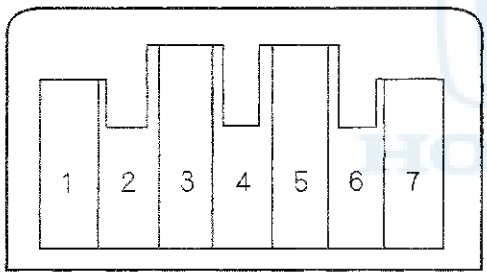

3. If the passenger's air mix control motor did not run in step 2, remove it, then check the passenger's air mix control linkage and door for smooth movement.

   - If the linkage and door move smoothly, replace the passenger's air mix control motor (see page 21-178).
   - If the linkage or door sticks or binds, repair them as needed.
   - If the passenger's air mix control motor runs smoothly, go to step 4.

4. Measure the resistance between the No. 5 and No. 7 terminals. It should be between 4.2 to 7.8 kΩ.

5. Reconnect the passenger's air mix control motor 7P connector, then turn the ignition switch to ON (II).

6. Using the backprobe set, measure the voltage between the No. 3 and No. 5 terminals of the 7P connector.

   Max Cool: about 1.5 V
   Max Hot: about 4.5 V

7. If either the resistance or the voltage readings are not as specified, replace the passenger's air mix control motor (see page 21-178).

Passenger's Air Mix Control Motor Replacement

1. Remove the glove box (see page 20-161).

2. Disconnect the 4P connector (A) from the power transistor (B), and the 7P connector (C) from the passenger's air mix control motor (D). Remove the self-tapping screws and the passenger's air mix control motor from the heater unit.

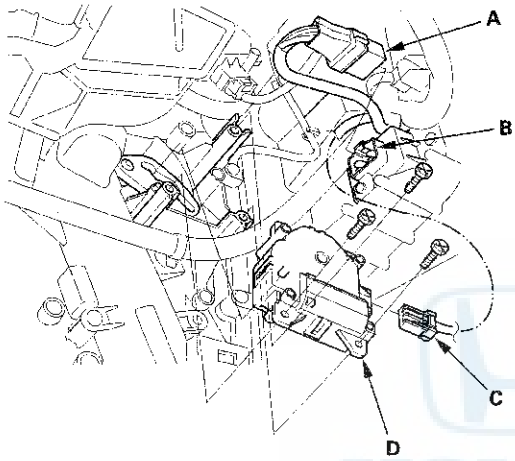

3. Install the motor in the reverse order of removal. Make sure the pin on the motor is properly engaged with the linkage. After installation, make sure the motor runs smoothly.

Mode Control Motor Test

NOTE: Before testing, check for HVAC DTCs (see page 21-99).

1. Disconnect the 7P connector from the mode control motor.

NOTICE
Incorrectly applying power and ground to the mode control motor will damage it. Follow the instructions carefully.

2. Connect battery power to the No. 1 terminal of the mode control motor, and ground the No. 2 terminal; the mode control motor should run, and stop at Defrost. If it doesn't, reverse the connections; the mode control motor should run, and stop at Vent. When the mode control motor stops running, disconnect battery power immediately.

MODE CONTROL MOTOR

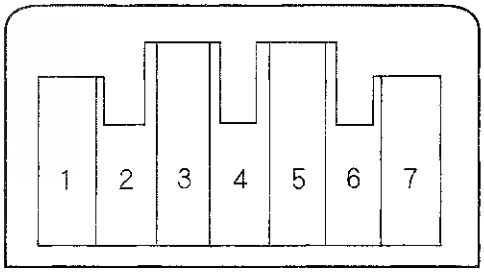

3. If the mode control motor did not run in step 2, remove it, then check the mode control linkage and door for smooth movement.

   - If the linkage and door move smoothly, replace the mode control motor (see page 21-59).
   - If the linkage or door sticks or binds, repair them as needed.
   - If the mode control motor runs smoothly, go to step 4.

4. Measure the resistance between the No. 5 and No. 7 terminals of the mode control motor. It should be between 4.2 and 7.8 kΩ.

5. Reconnect the mode control motor 7P connector, then turn the ignition switch to ON (II).

6. Using the backprobe set, measure the voltage between the No. 3 and No. 7 terminals of the 7P connector.

   Vent: About 0.5 V
   Defrost: About 4.5 V

7. If either the resistance or the voltage readings are not as specified, replace the mode control motor (see page 21-59).

Recirculation Control Motor Test

NOTE: Before testing, check for HVAC DTCs (see page 21-99).

1. Disconnect the 7P connector from the recirculation control motor.

   NOTICE
   Incorrectly applying power and ground to the recirculation control motor will damage it. Follow the instructions carefully.

2. Connect battery power to the No. 1 terminal of the recirculation control motor, and ground the No. 2 terminal; the recirculation control motor should run, and stop at Fresh. If it doesn't, reverse the connections; the recirculation control motor should run, and stop at Recirculate. When the recirculation control motor stops running, disconnect battery power immediately.

RECIRCULATION CONTROL MOTOR

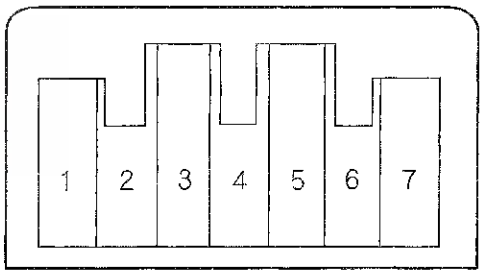

3. If the recirculation control motor did not run in step 2, remove it, then check the recirculation control linkage and door for smooth movement.

   - If the linkage and door move smoothly, replace the recirculation control motor (see page 21-61).
   - If the linkage or door sticks or binds, repair them as needed.
   - If the recirculation control motor runs smoothly, go to step 4.

(cont'd)

Recirculation Control Motor Test (cont'd)

4. Measure the resistance between terminals No. 5 and No. 7 of the recirculation control motor. It should be between 4.2 and 7.8 kΩ.

5. Reconnect the recirculation control motor 7P connector, then turn the ignition switch to ON (II).

6. Using the backprobe set, measure the voltage between terminals No. 3 and No. 7 of the 7P connector.

   Fresh: About 1.0 V
   Recirculate: About 4.0 V

7. If either the resistance or the voltage readings are not as specified, replace the recirculation control motor (see page 21-61).

Climate Control Unit Removal/ Installation

With Navigation

1. Remove the passenger's dashboard center lower cover (see page 20-157).

2. Disconnect the connectors (A). Loosen the bolt (B) and remove the bolts (C) from the climate control unit (D).

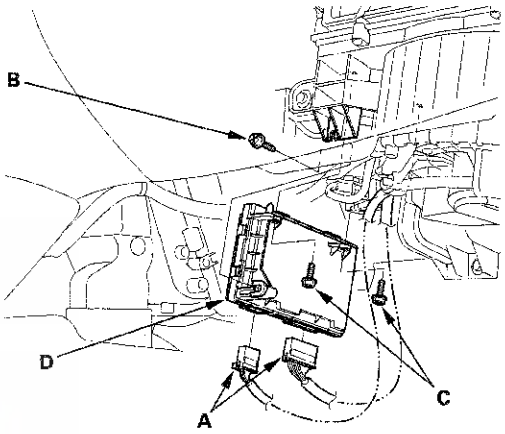

3. Install the control unit in the reverse order of removal. After installation, operate the various functions to make sure they work properly.

4. Run the self-diagnostic function to confirm that there are no problems in the system (see page 21-100).

Without Navigation

1. Remove the audio unit (see page 23-111).

2. Remove the self-tapping screws and the climate control unit (A). If necessary, replace the bulbs (B).

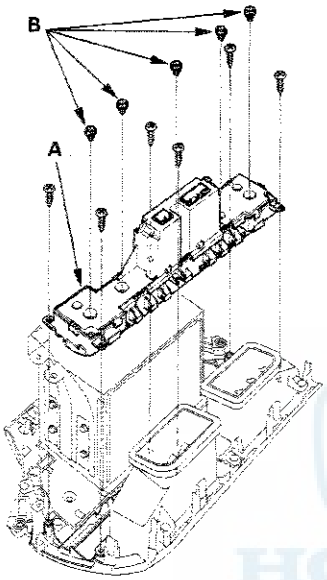

3. Install the control unit in the reverse order of removal.

4. Run the self-diagnostic function to confirm that there are no problems in the system (see page 21-100).

Climate Control Switch Removal/ Installation

With Navigation

1. Remove the audio unit (see page 23-110).

2. Remove the self-tapping screws and the climate control switches (A). If necessary, replace the bulbs (B).

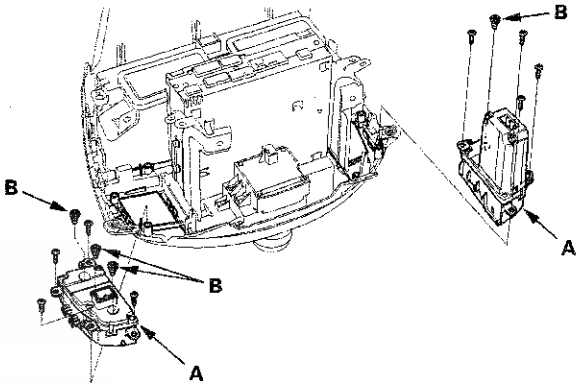

3. Install the switches in the reverse order of removal.

4. Run the self-diagnostic function to confirm that there are no problems in the system (see page 21-100).

SUPPLEMENTAL RESTRAINT SYSTEM (SRS) (If electrical maintenance is required)

The Accord SRS includes a driver's airbag in the steering wheel hub, a passenger's airbag in the dashboard above the glove box, seat belt tensioners in the front seat belt retractors, side curtain airbags in the sides of the roof, and side airbags in the front seat-backs. Information necessary to safely service the SRS is included in this Service Manual. Items marked with an asterisk (*) on the contents page include or are located near SRS components. Servicing, disassembling, or replacing these items requires special precautions and tools, and should be done by an authorized Honda dealer.

- To avoid rendering the SRS inoperative, which could lead to personal injury or death in the event of a severe frontal or side collision, all SRS service work should be done by an authorized Honda dealer.
- Improper service procedures, including incorrect removal and installation of the SRS, could lead to personal injury caused by unintentional deployment of the airbags, side airbags, and/or side curtain airbags.
- Do not bump or impact the SRS unit, front impact sensors, side impact sensors, or rear safing sensor when the ignition switch is in ON (II), or for at least 3 minutes after the ignition switch is turned to LOCK (0); otherwise, the system may fail in a collision, or the airbags may deploy.
- SRS electrical connectors are identified by yellow color coding. Related components are located in the steering column, front console, dashboard, dashboard lower panel, in the dashboard above the glove box, in the front seats, in the roof side, and around the floor. Do not use electrical test equipment on these circuits.

Navigation Tools: Click on the “Table of Contents” below, or use the Bookmarks to the left.

Body Electrical

Body Electrical
Special Tools 22-2
General Troubleshooting Information 22-3

Relay and Control Unit Locations **22-7**

Connectors and Harnesses **22-15**

Fuse/Relay Boxes **22-74**

Power Distribution **22-78**

Ground Distribution **22-82**

Under-hood Fuse/Relay Box
Removal and Installation 22-83

* **Under-dash Fuse/Relay Box**
Driver's Under-dash Fuse/Relay Box Removal and Installation 22-84
Passenger's Under-dash Fuse/Relay Box Removal and Installation 22-87

Battery
Battery Test 22-88
Battery Terminal Disconnection and Reconnection 22-89
Battery Removal and Installation 22-90

Relays
Power Relay Test 22-91

* **Ignition Switch**
Test 22-94
Replacement 22-94

Multiplex Integrated Control System
Component Location Index 22-95
General Troubleshooting Information 22-96
DTC Troubleshooting Index 22-99
System Description 22-102
Troubleshooting - B-CAN System Diagnosis Test Mode A 22-120
Troubleshooting - B-CAN System Diagnosis Test Mode B 22-122
Troubleshooting - B-CAN System Diagnosis Test Mode C 22-123
Troubleshooting - B-CAN System Diagnosis Test Mode D 22-124
Troubleshooting - B-CAN System Diagnosis Test Mode 1 and Test Mode 2 22-125
Sleep and Wake-up Mode Test 22-127
Circuit Diagram 22-128
DTC Troubleshooting 22-130
MICU Input Test 22-138

Keyless/Power Door Locks/Security System
Component Location Index 22-143
System Description 22-149
Circuit Diagram 22-150
DTC Troubleshooting 22-154
Symptom Troubleshooting 22-158
Control Unit Input Test 22-161
Door Lock Actuator Test 22-171
Door Lock Knob Switch Test 22-172
Door Key Cylinder Switch Test 22-173
Hood Switch Test 22-173
Trunk Lid Release Actuator Test 22-174
Transmitter Test 22-175

* **Horns**
Component Location Index 22-178
Circuit Diagram 22-179
Horn Test/Replacement 22-179
Horn Switch Test 22-180

Exterior Lights
Component Location Index 22-181
System Description 22-187
Circuit Diagram 22-188
DTC Troubleshooting 22-194
MICU Input Test 22-203
Combination Light Switch Test/Replacement 22-208
Headlight Adjustment 22-209
Headlight Replacement 22-210
Bulb Replacement 22-211
Taillight Replacement 22-214
License Plate Light Replacement 22-215
High Mount Brake Light Replacement 22-216
Brake Pedal Position Switch Test 22-216

Turn Signal/Hazard Warning Lights
Component Location Index 22-217
Circuit Diagram 22-218
MICU Input Test 22-221
Hazard Warning Switch Test/Replacement 22-224

Navigation Tools: Click on the "Table of Contents" below, or use the Bookmarks to the left.

Interior Lights
Component Location Index 22-225
Circuit Diagram 22-230
Front Individual Map Light Test/Replacement 22-232
Ceiling Light Test/Replacement 22-233
Trunk Light Test/Replacement 22-233
Interior Light Switch Test/Replacement ... 22-234
Ambient Light Test/Replacement 22-234
Courtesy Light Replacement 22-235
Glove Box Light Replacement 22-235
Vanity Mirror Light Test/Replacement 22-236
Trunk Lid Latch Switch Test 22-236

Entry Lights Control System
Component Location Index 22-238
Circuit Diagram 22-240
Control Unit Input Test 22-242
Ignition Key Switch Test 22-247
Ignition Key Light Test 22-247

Power Windows
Component Location Index 22-248
System Description 22-250
Resetting the Power Window Control Unit 22-251
Circuit Diagram 22-252
DTC Troubleshooting 22-255
Power Window Master Switch Input Test 22-262
Front Passenger's Power Window Switch Input Test 22-265
Driver's Power Window Motor Test 22-268
Front Passenger's Power Window Motor Test 22-270
Rear Power Window Motor Test 22-274
Power Window Master Switch Replacement 22-275
Front Passenger's Power Window Switch Replacement 22-276
Rear Power Window Switch Test/Replacement 22-277

Wipers/Washers
Component Location Index 22-278
Circuit Diagram 22-280
DTC Troubleshooting 22-282
MICU Input Test 22-286
Wiper/Washer Switch Test/Replacement 22-290
Wiper Motor Test 22-291
Washer Motor Test 22-292
Washer Fluid Level Switch Test 22-292
Wiper Motor Replacement 22-293
Washer Reservoir Replacement 22-296
Wiper Blade Replacement 22-297
Wiper Arm/Nozzle Adjustment 22-299
Washer Tube Replacement 22-301

Gauges
Component Location Index 22-302
Self-diagnostic Function 22-304
Circuit Diagram 22-308
DTC Troubleshooting 22-312
Gauge Control Module Input Test 22-320
Rewriting the ODO Data and Transferring Maintenance Minder Data to a New Gauge Control Module 22-323
Gauge Control Module Replacement 22-324
Outside Air Temperature Indicator Calibration 22-325
Outside Air Temperature Sensor Test 22-326
Outside Air Temperature Sensor Replacement 22-326

Safety Indicators Systems
Component Location Index 22-327
Circuit Diagram 22-329
MICU Input Test 22-331

Reminder Systems
Component Location Index 22-335
Circuit Diagram 22-336
Control Unit Input Test 22-338

Moonroof
Component Location Index 22-341
Resetting the Moonroof Control Unit 22-342
Circuit Diagram 22-343
Moonroof Control Unit Input Test 22-344
Moonroof Switch Test/Replacement 22-347

Accessory Power Sockets
Component Location Index 22-348
Circuit Diagram 22-349
Front Accessory Power Socket Test/Replacement 22-350
Console Accessory Power Socket Test/Replacement 22-351

Power Mirrors
Component Location Index 22-352
Circuit Diagram 22-354
Function Test 22-357
Power Window Master Switch Input Test 22-358
Front Passenger's Power Window Switch Input Test 22-360
Power Mirror Switch Test/Replacement 22-362
Power Mirror Actuator Test 22-362
Power Mirror Actuator Replacement 22-363

Navigation Tools: Click on the “Table of Contents” below, or use the Bookmarks to the left.

Automatic Dimming Inside Mirror
Circuit Diagram 22-365
System Description 22-366
Test/Replacement 22-366

Power Seat
Component Location Index 22-367
Circuit Diagram 22-368
Power Seat Adjustment Switch Test/Replacement 22-369
Motor Test 22-370

Power Lumbar Support
Component Location Index 22-372
Circuit Diagram 22-373
Power Seat Adjustment Switch Test/Replacement 22-374
Motor Test 22-374

Seat Heaters
Component Location Index 22-375
Circuit Diagram 22-378
Seat Heater Test 22-380
Switch Test/Replacement 22-381

Rear Window Defogger
Component Location Index 22-382
Circuit Diagram 22-383
Function Test 22-385
Defogger Wire Repair 22-386

Immobilizer System
Component Location Index 22-387
System Description 22-388
Circuit Diagram 22-389
DTC Troubleshooting 22-390
Symptom Troubleshooting Information 22-392
Symptom Troubleshooting 22-394
System Check 22-397
Status Log 22-399
Immobilizer-keyless Control Unit Input Test 22-400
Immobilizer Key Registration 22-402
Immobilizer-keyless Control Unit Replacement 22-403

Special Tools

Ref. No.	Tool Number	Description	Qty
①	07WAZ-001010A	MPCS (MCIC) Service Connector	1
②	07TAZ-001020A	Back Probe Adaptor	2
③	07AAC-000A1A0	Relay Puller	1

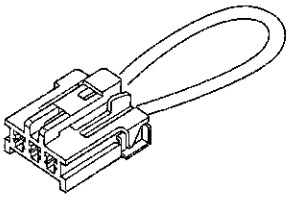

①

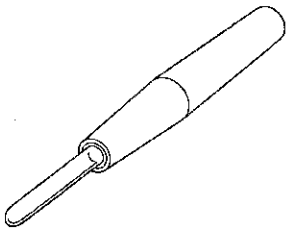

②

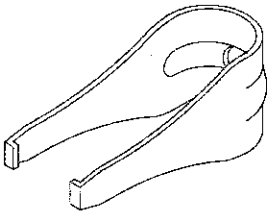

③

General Troubleshooting Information

Tips and Precautions

Before Troubleshooting

1. Check applicable fuses in the appropriate fuse/relay box.

2. Check the battery for damage, state of charge, and clean and tight connections.

NOTICE

- Do not quick-charge a battery unless the battery ground cable has been disconnected, otherwise you will damage the alternator diodes.
- Do not attempt to crank the engine with the battery ground cable loosely connected or you will severely damage the wiring.

Handling Connectors

- Make sure the connectors are clean and have no loose wire terminals.
- Make sure multiple cavity connectors are packed with dielectric grease (except watertight connectors).
- All connectors have push-down release type locks (A).

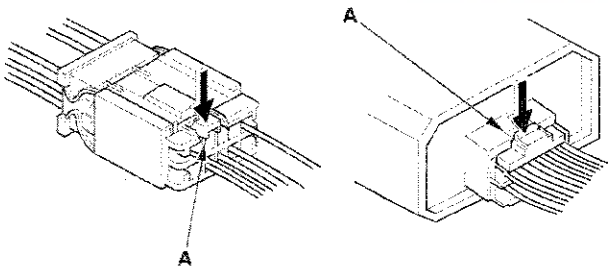

- Some connectors have a clip on their side used to attach them to a mount bracket on the body or on another component. This clip has a pull type lock.
- Some mounted connectors cannot be disconnected unless you first release the lock and remove the connector from its mount bracket (A).

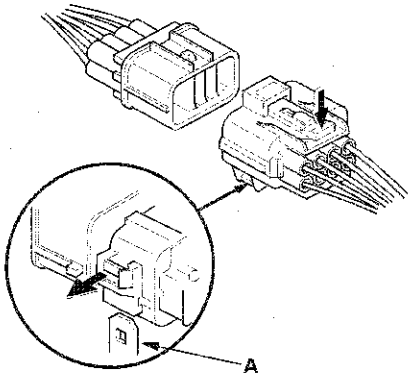

- Never try to disconnect connectors by pulling on their wires; pull on the connector halves instead.
- Always reinstall plastic covers.

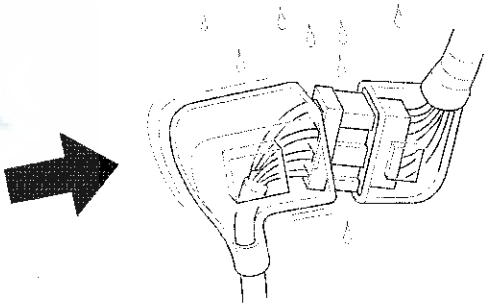

- Before connecting connectors, make sure the terminals (A) are in place and not bent.

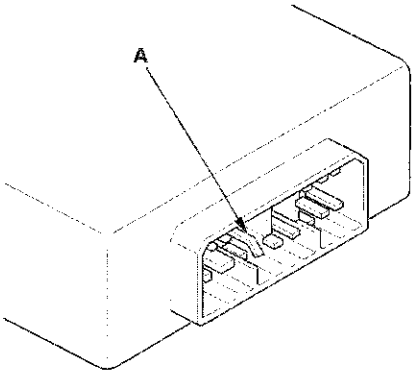

(cont'd)

General Troubleshooting Information (cont'd)

- Check for loose retainers (A) and rubber seals (B).

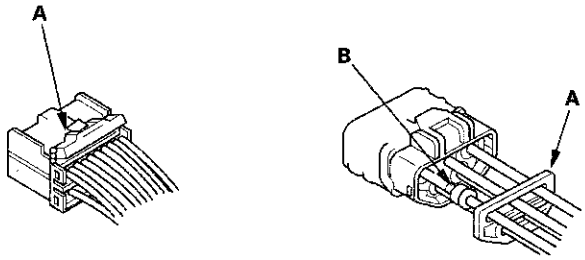

- The backs of some connectors are packed with dielectric grease. Add grease if necessary. If the grease is contaminated, replace it.

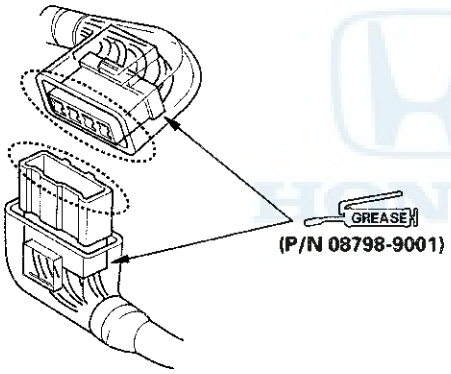

- Insert the connector all the way and make sure it is securely locked.
- Position wires so that the open end of the cover faces down.

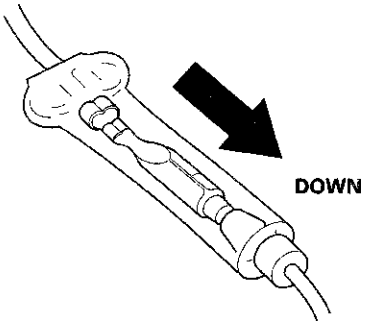

Handling Wires and Harnesses

- Secure wires and wire harnesses to the frame with their respective wire ties at the designated locations.
- Remove clips carefully; don't damage their locks (A).

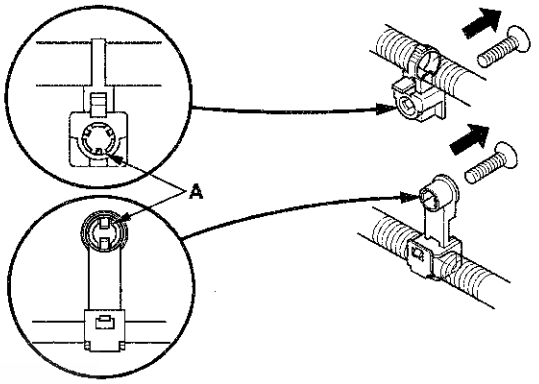

- After installing harness clips, make sure the harness doesn't interfere with any moving parts.
- Keep wire harnesses away from exhaust components and other hot parts, from sharp edges of brackets and holes, and from exposed screws and bolts.
- Seat grommets in their grooves properly (A). Do not leave grommets distorted (B).

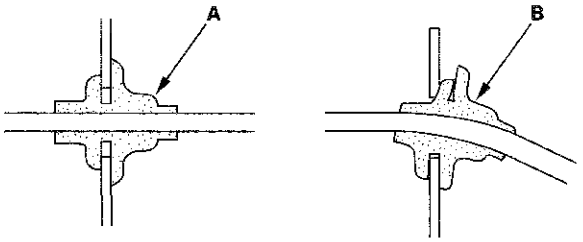

Testing and Repairs

- Do not use wires or harnesses with broken insulation. Replace them or repair them by wrapping the break with electrical tape.
- Never attempt to modify, splice, or repair SRS wiring. If there is an open or damage is SRS wiring or terminals, replace the harness.
- After installing parts, make sure that no wires are pinched under them.
- When using electrical test equipment, follow the manufacturer's instructions and those described in this manual.
- If possible, insert the probe of the tester from the wire side (except waterproof connector).

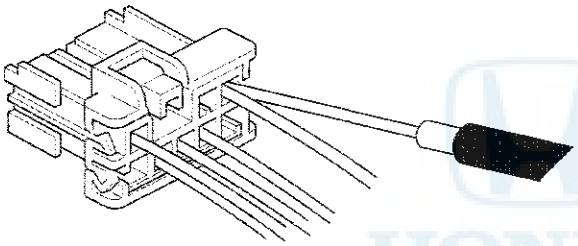

- Use back probe adaptor 07TAZ-001020A.

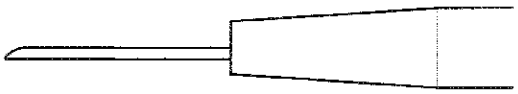

- Refer to the instructions in the Honda Terminal Kit for identification and replacement of connector terminals.

Five-step Troubleshooting

1. Verify The Complaint:
   Turn on all the components in the problem circuit to verify the customer complaint. Note the symptoms. Do not begin disassembly or testing until you have narrowed down the problem area.

2. Analyze The Schematic:
   Look up the schematic for the problem circuit. Determine how the circuit is supposed to work by tracing the current paths from the power feed through the circuit components to ground. If several circuits fail at the same time, the fuse or a ground is a likely cause.

   Based on the symptoms and your understanding of the circuit operation, identify one or more possible causes of the problem.

3. Isolate The Problem By Testing The Circuit:
   Make circuit tests to check the diagnosis you made in step 2. Keep in mind that a logical, simple procedure is the key to efficient troubleshooting. Test for the most likely cause of failure first. Try to make tests at points that are easily accessible.

4. Fix The Problem:
   Once the specific problem is identified, make the repair. Be sure to use proper tools and safe procedures.

5. Make Sure The Circuit Works:
   Turn on all components in the repaired circuit in all modes to make sure you've fixed the entire problem. If the problem was a blown fuse, be sure to test all of the circuits on the fuse. Make sure no new problems turn up and the original problem does not recur.

(cont'd)

General Troubleshooting Information (cont'd)

Wire Color Codes

The following abbreviations are used to identify wire colors in the circuit schematics:

WHT	White
YEL	Yellow
BLK	Black
BLU	Blue
GRN	Green
RED	Red
ORN	Orange
PNK	Pink
BRN	Brown
GRY	Gray
PUR	Purple
LT BLU	Light Blue
LT GRN	Light Green

The wire insulation has one color or one color with another color stripe. The second color is the stripe.

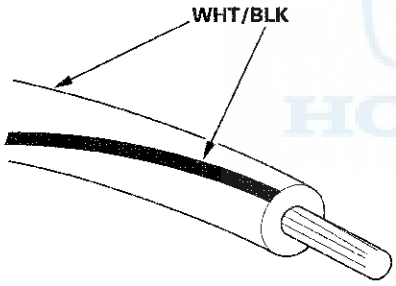

How to Check for DTCs with the Honda Diagnostic System (HDS)

NOTE: For specific operations, refer to the user's manual that came with the Honda Diagnostic System (HDS).

1. Connect the HDS to the data link connector (DLC) (A) located under the driver's side of the dashboard.

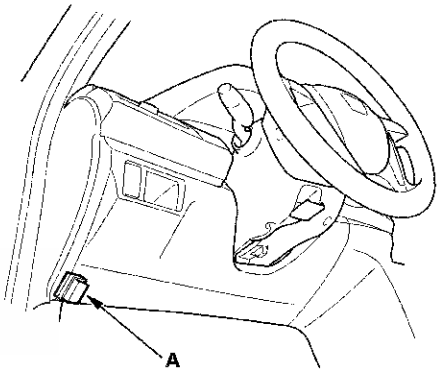

2. Turn the ignition switch ON (II).
3. Make sure the HDS communicates with the vehicle, if it doesn't, troubleshoot the DLC circuit (see page 11-192).
4. Enter the BODY ELECTRICAL then select the desired TEST MODE menu.
5. Check for DTCs with the HDS.

   NOTE: If the DTCs do not pertain to the selected menu, select the All DTC Check icon to view all Body DTCs.

6. If any DTCs are indicated, note them, and go to the indicated DTC troubleshooting.

Relay and Control Unit Locations

Engine Compartment

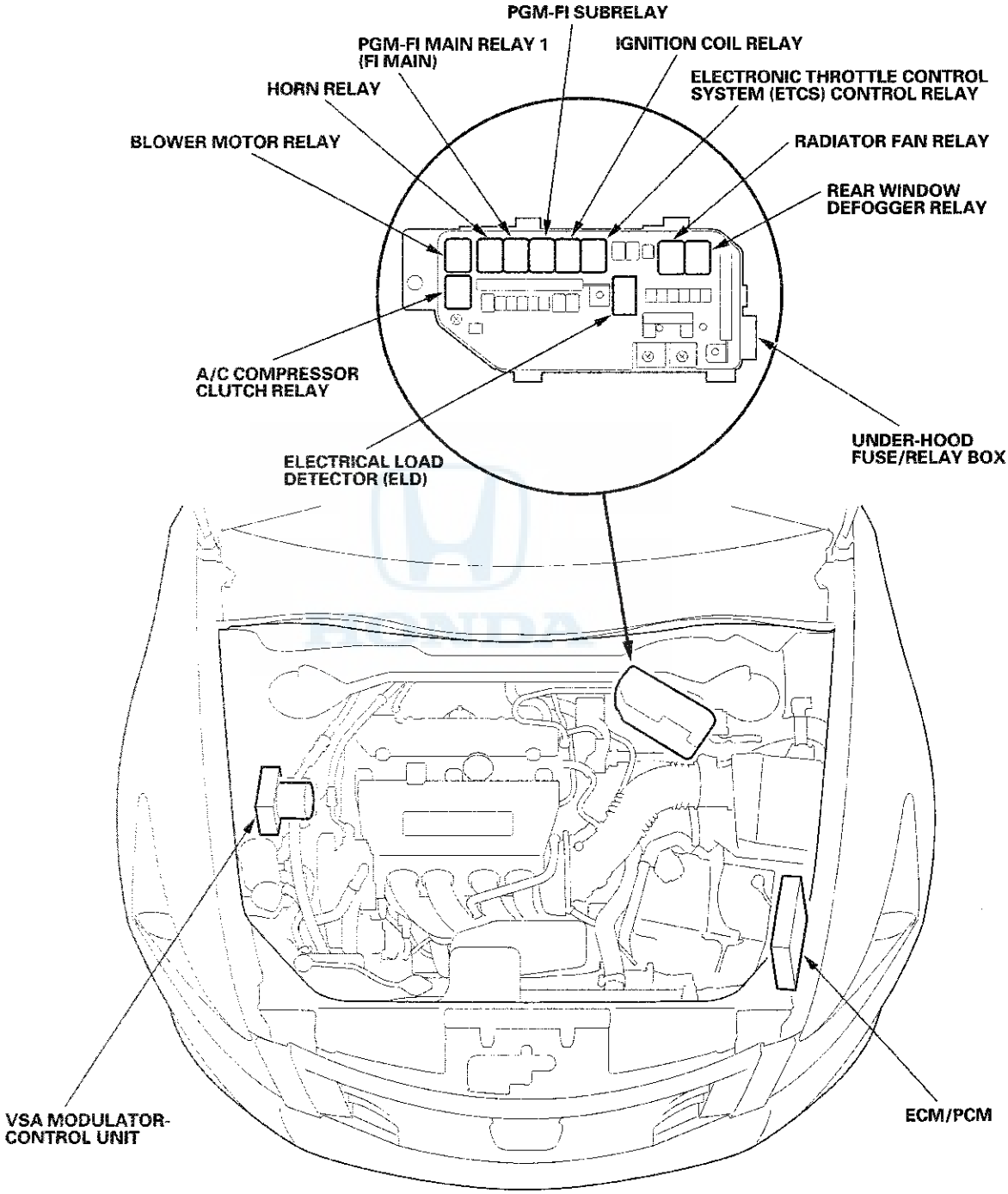

Relay and Control Unit Locations

Dashboard

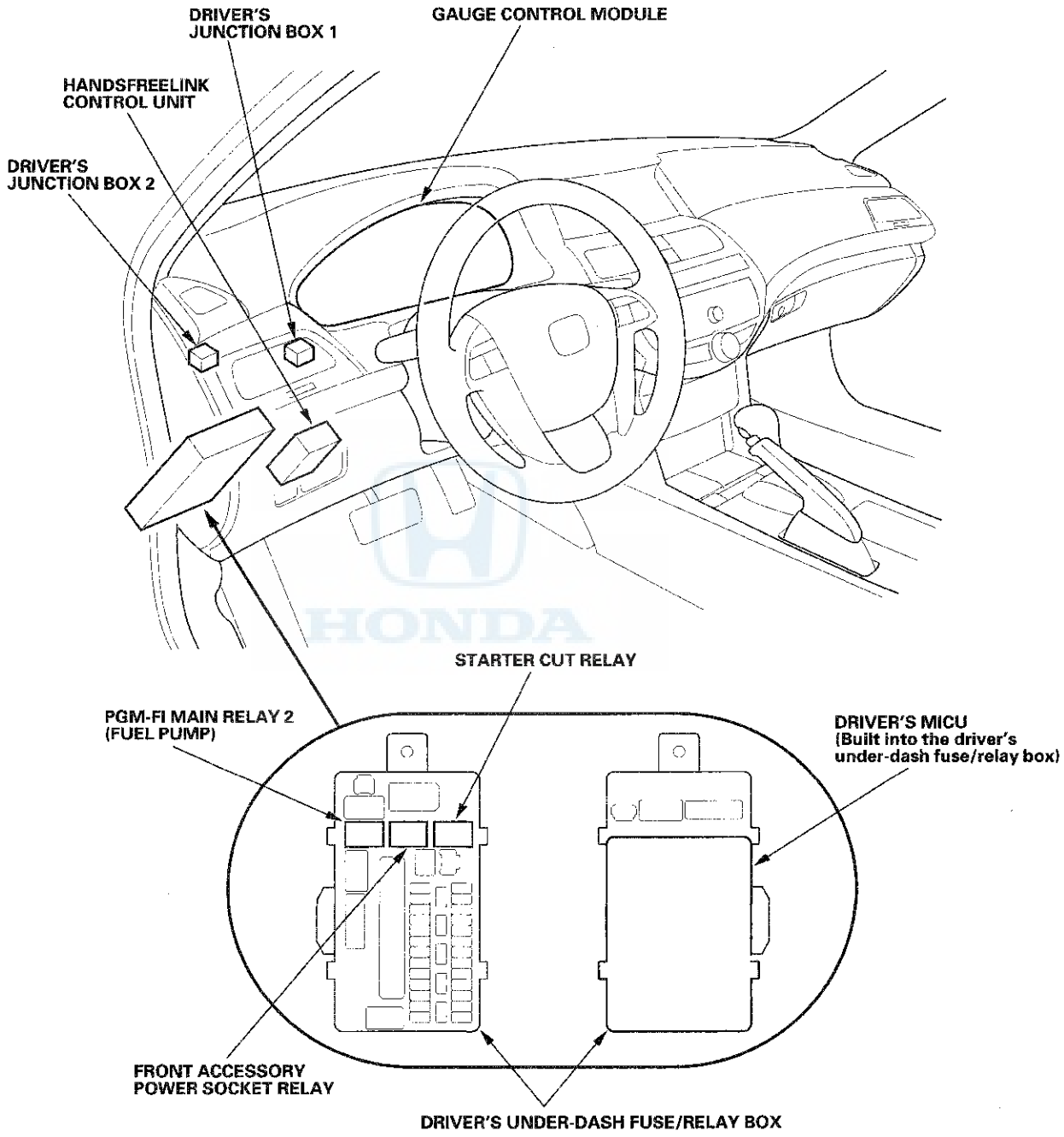

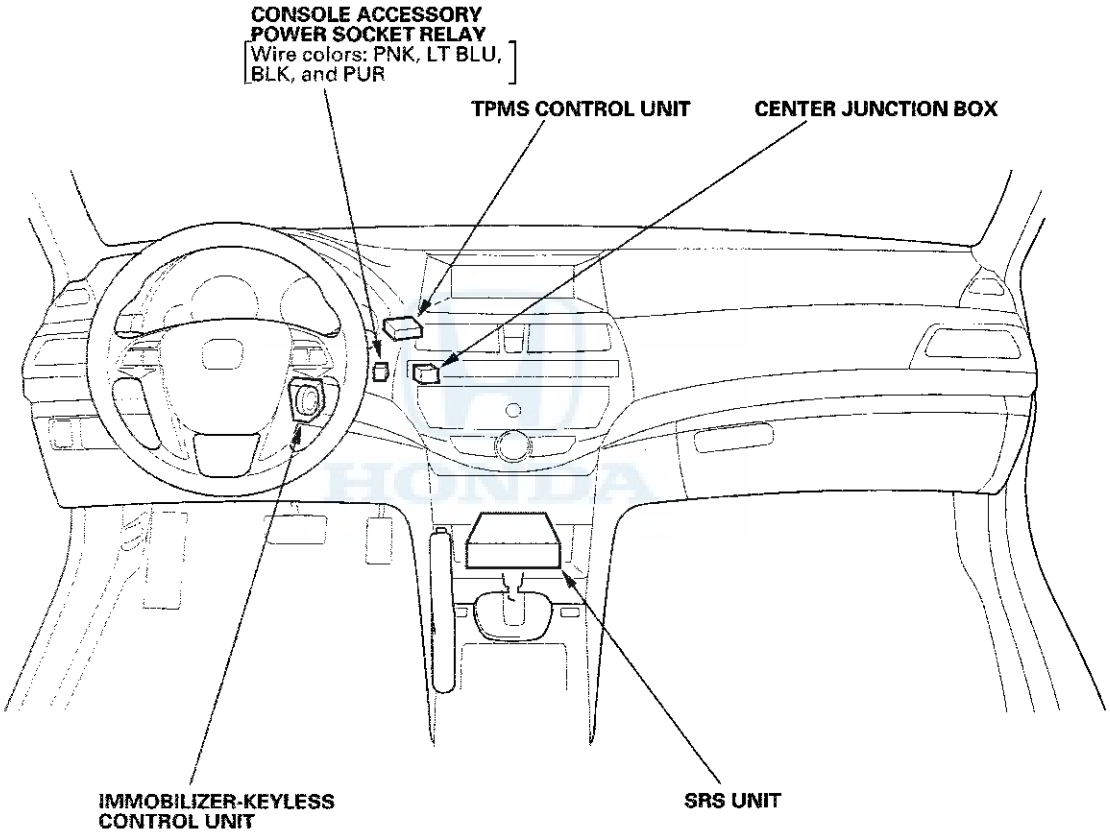
CONSOLE ACCESSORY POWER SOCKET RELAY
[Wire colors: PNK, LT BLU, BLK, and PUR]
TPMS CONTROL UNIT
CENTER JUNCTION BOX
IMMOBILIZER-KEYLESS CONTROL UNIT
SRS UNIT

(cont'd)

Relay and Control Unit Locations

Dashboard (cont'd)

With Navigation System

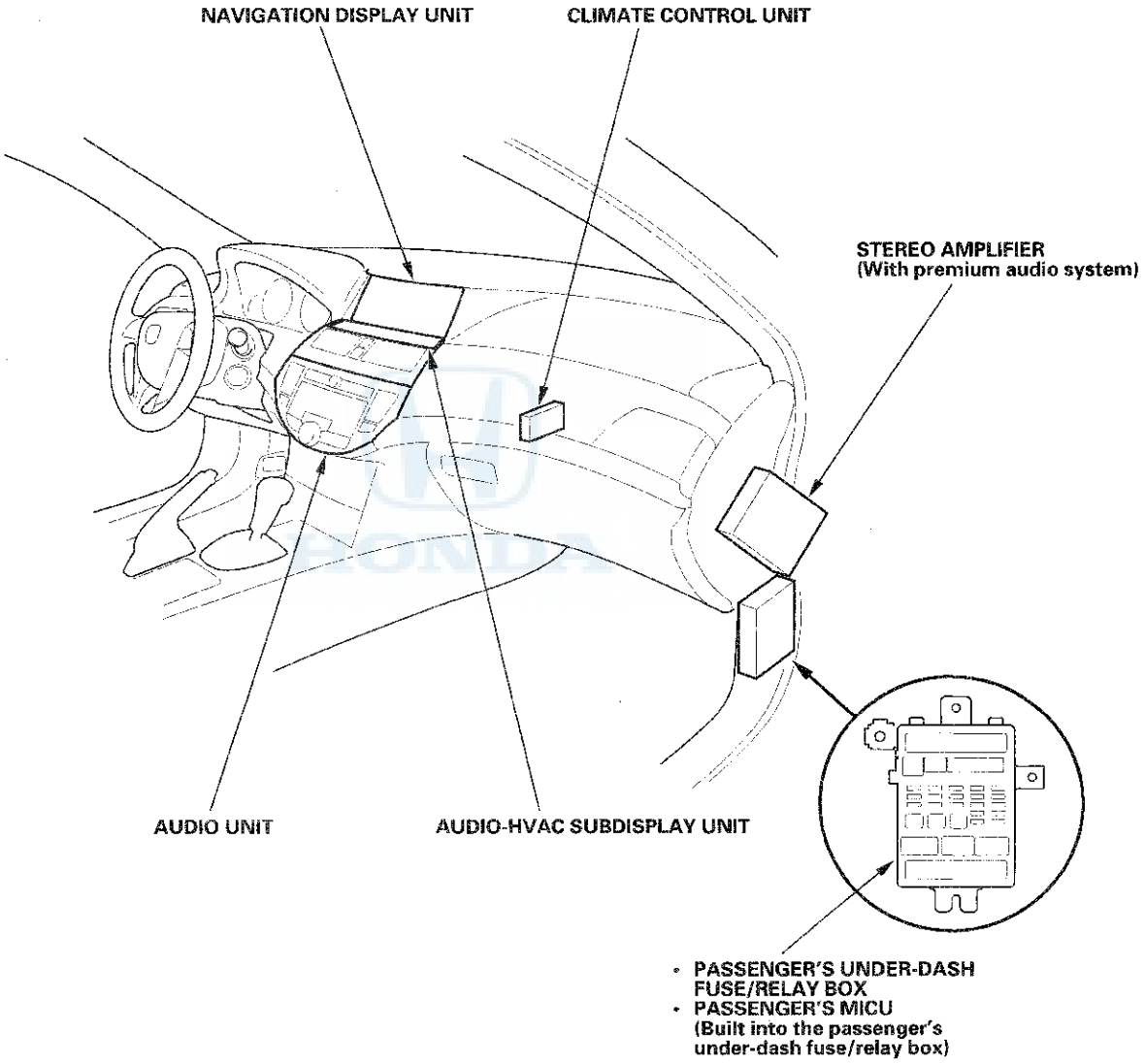

Without Navigation System

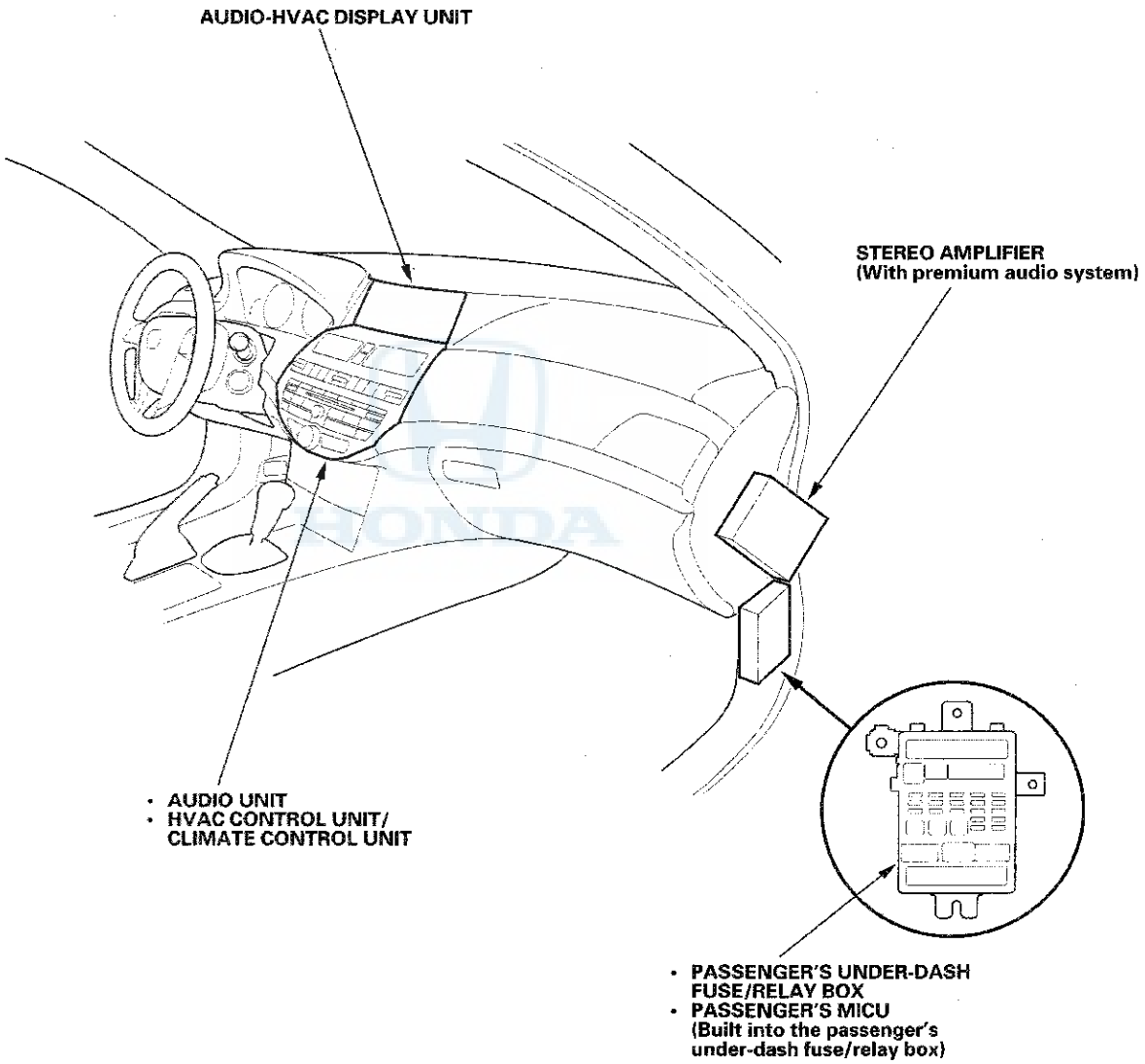

Relay and Control Unit Locations

Roof and Trunk

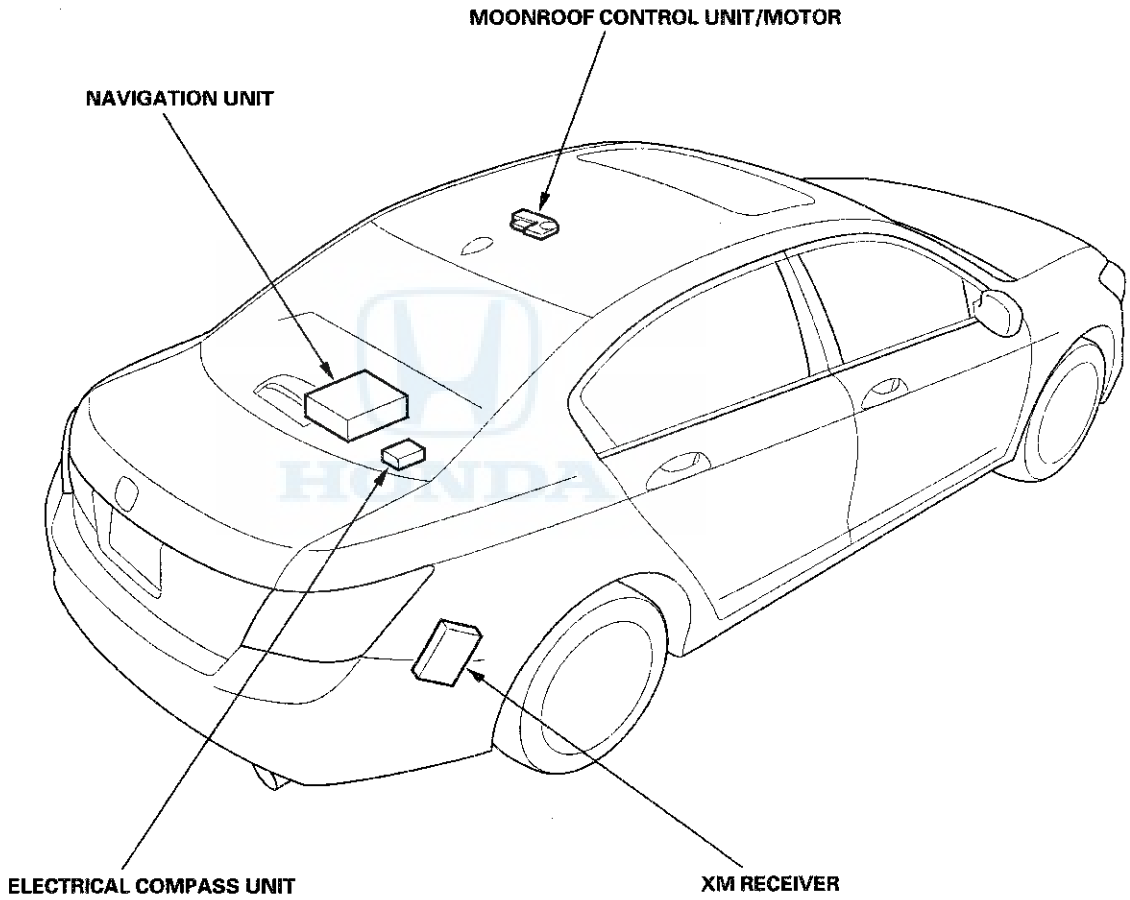

Seat

Driver's seat

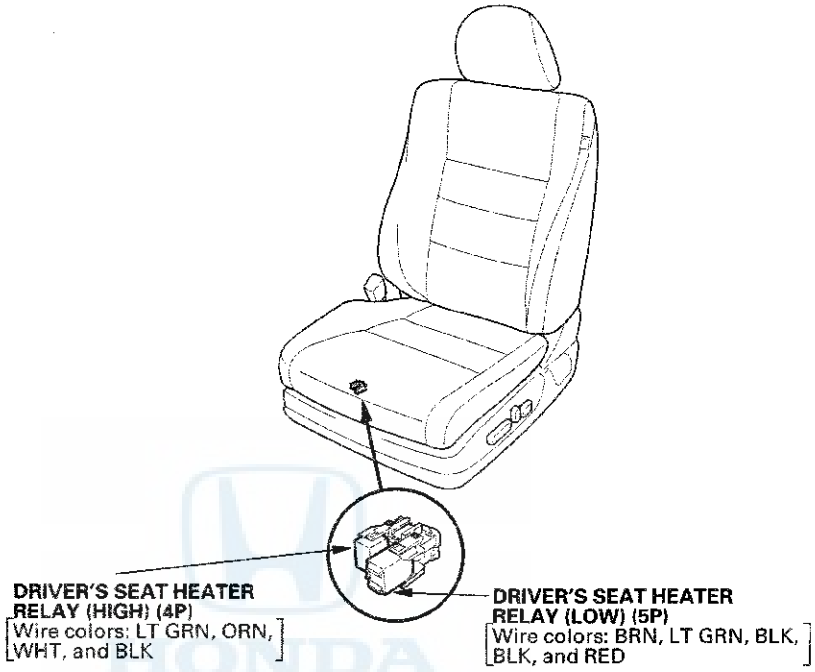

Front passenger's seat

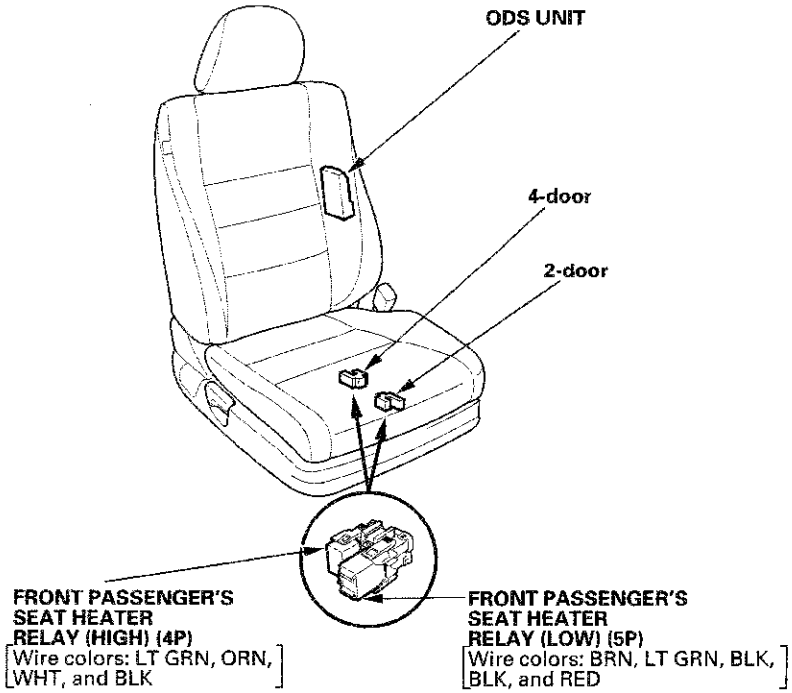

Door

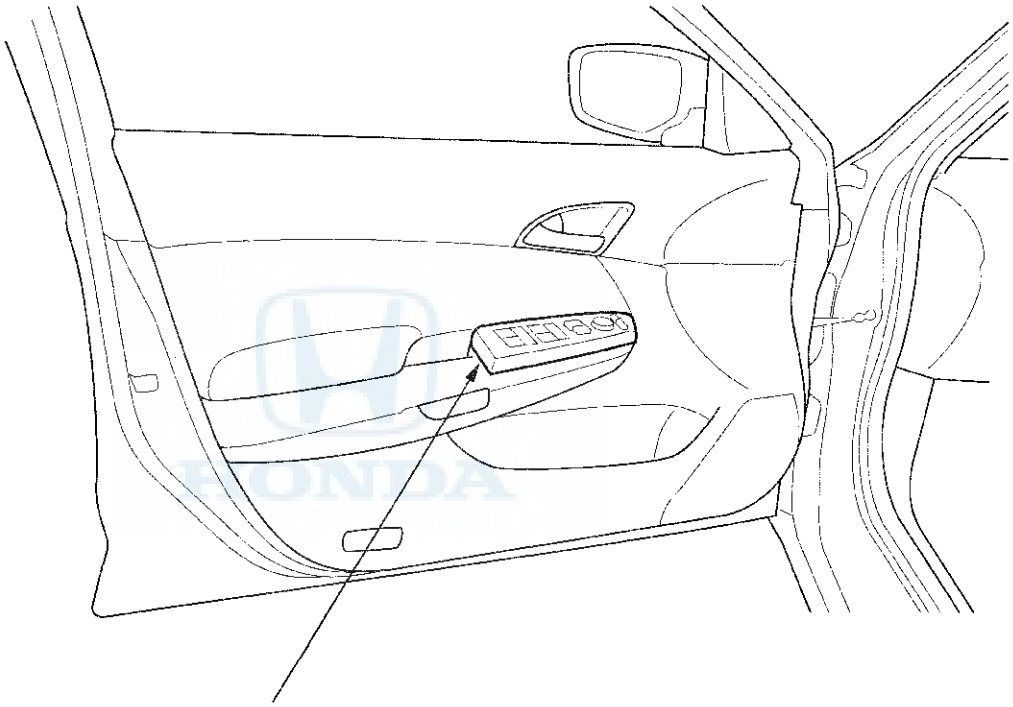

DOOR MULTIPLEX CONTROL UNIT
(Built into the power window master switch)

Connectors and Harnesses

Connector Index

Identification numbers have been assigned to in-line connectors, junction connectors, and terminals. The number is preceded by the letter "C" for connectors "G" for ground terminals or "T" for non-ground terminals.

Harness	Location			
	Engine Compartment	Dashboard	Others (Floor, Door, Trunk, and Roof)	Notes
ANC rear microphone subharness			C653	4-door: (see page 22-46) 2-door: (see page 22-48)
A/C wire harness (climate control system with navigation system)		C351, C409		(see page 22-70)
A/C wire harness (climate control system without navigation system)		C351, C409		(see page 22-71)
A/C wire harness (HVAC control system)		C351, C409		(see page 22-72)
Audio wire harness (with premium audio and navigation system)		C401, C402, C403, C404, C405, C406, C407, C408, C409, C410, C411 G401, G402		(see page 22-40)
Audio wire harness (with premium audio without navigation system)		C401, C402, C403, C405, C406, C407, C408, C409, C410 G401, G402		(see page 22-42)
Audio wire harness (without premium audio and navigation system)		C401, C403, C409, C410 G401, G402		(see page 22-44)
Battery ground cable	(—), G1			(see page 22-17)
Cable reel subharness				(see page 22-73)
CKP sensor subharness	C104			(see page 22-24)
Dashboard wire harness (view of driver's side)		C301, C302, C303, C501, C502, C601, C751 G501, G502		(see page 22-32)
Dashboard wire harness (view of middle to passenger's side)		C401, C402, C403, C503 G503	C701 G504	(see page 22-36)
Driver's door wire harness			C751	4-door: (see page 22-60) 2-door: (see page 22-61)
Driver's seat position sensor harness (without power seat)			C702	(see page 22-67)
Driver's seat wire harness (with power seat)			C702	(see page 22-66)
Engine ground cable	T3, G2			(see page 22-17)
Engine wire harness	C101, C102, C103, C104 G101, G102			M/T: (see page 22-20) A/T: (see page 22-22)
Front passenger's door wire harness (4-door)			C761	(see page 22-62)
Front passenger's seat wire harness			C703	4-door: (see page 22-68) 2-door: (see page 22-69)
Left engine compartment wire harness	C101, C151, C201 G301	C301, C302, C303, C304, C351 G302		(see page 22-28)
Left rear door wire harness (4-door)			C771	(see page 22-64)
Left side wire harness		C304, C601	C771 G601, G602, G603	4-door: (see page 22-50) 2-door: (see page 22-52)
Moonroof subharness			C551	(see page 22-58)
Passenger's door wire harness (2-door)			C761	(see page 22-63)

(cont'd)

Connector Index (cont'd)

Harness	Location			
	Engine Compartment	Dashboard	Others (Floor, Door, Trunk, and Roof)	Notes
Rear window defogger ground wire		G801		4-door: (see page 22-50) 2-door: (see page 22-52)
Right engine compartment wire harness	C201 G202, G203	C202, C203 G201		(see page 22-26)
Right rear door wire harness (4-door)			C781	(see page 22-65)
Right side wire harness		C410, C411, C651	C652, C653, C781 G651	4-door: (see page 22-46) 2-door: (see page 22-48)
Roof wire harness		C501, C502	C551	With moonroof: (see page 22-58) Without moonroof: (see page 22-59)
Shift solenoid wire harness (A/T)	C105			(see page 22-24)
SRS floor wire harness			C701, C702, C703 G701, G702	4-door: (see page 22-54) 2-door: (see page 22-56)
Starter subharness	(+), T1, T2, T101, T102, C102, C151			(see page 22-18)
Transmission ground cable	T4, G3			(see page 22-17)
Transmission range switch subharness (A/T)	C106			(see page 22-24)

HONDA

Connector to Harness Index

Battery Ground Cable

Connector or Terminal	Ref	Cavities	Location	Connects to	Notes
(—)	1		Left side of engine compartment	Battery negative terminal	
G1	4		Left side of engine compartment	Body ground, via battery ground cable	

Engine Ground Cable

Connector or Terminal	Ref	Cavities	Location	Connects to	Notes
T1	5		Right side of engine compartment	Engine	
G2	6		Right side of engine compartment	Body ground, via engine ground cable	

Transmission Ground Cable

Connector or Terminal	Ref	Cavities	Location	Connects to	Notes
T2	2		Left side of engine compartment	Transmission housing	
G3	3		Left side of engine compartment	Body ground, via transmission ground cable	

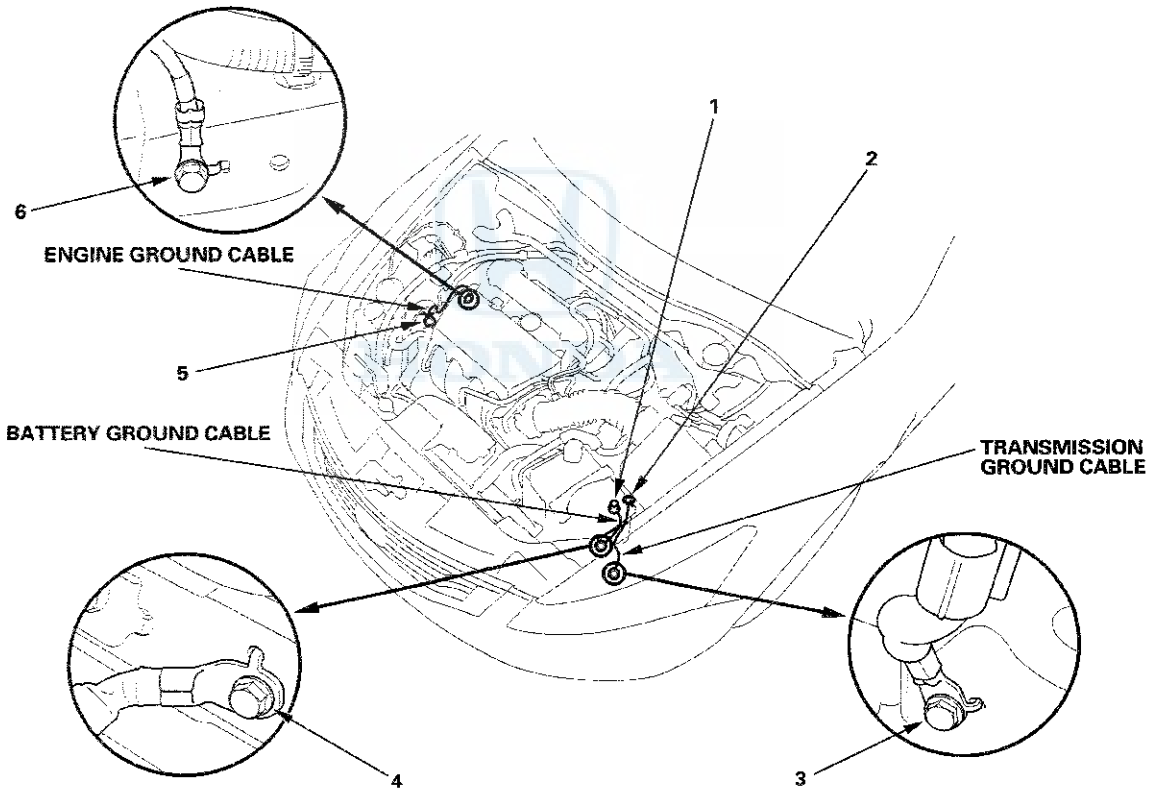

Connector to Harness Index (cont'd)

Starter Subharness

Connector or Terminal	Ref	Cavities	Location	Connects to	Notes
A/C compressor	9	1	Right front of engine compartment		
Alternator	10	4	Right front of engine compartment		
Knock sensor	8	1	Front of engine		
Starter solenoid	2	1	Front of engine		
C102	7	6	Front of engine	Engine wire harness M/T (see page 22-20) A/T (see page 22-22)	
C151	5	1	Left side of engine compartment	Left engine compartment wire harness (see page 22-28)	
T1	11		Right front of engine compartment	Alternator +B terminal	
T2	1		Front of engine	Starter motor	
T101 (Battery)	3		Left side of engine compartment	Under-hood fuse/relay box (see page 22-74)	
T102 (Alternator)	4		Left side of engine compartment	Under-hood fuse/relay box (see page 22-74)	
(+)	6		Left side of engine compartment	Battery positive terminal	

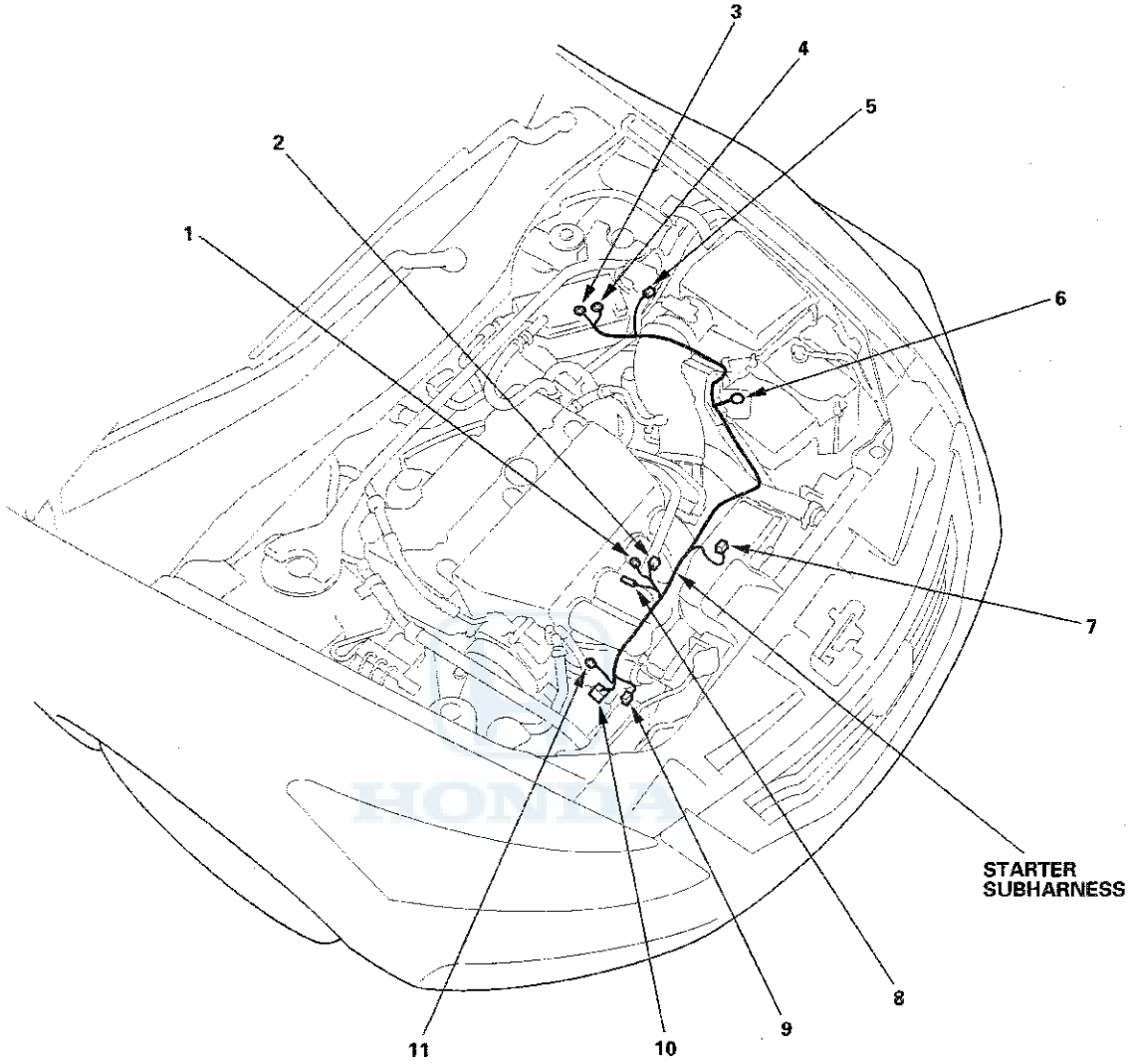
1
2
3
4
5
6
7
8
9
10
11
STARTER
SUBHARNESS

Connector to Harness Index (cont'd)

Engine Wire Harness (M/T)

Connector or Terminal	Ref	Cavities	Location	Connects to	Notes
Air fuel ratio (A/F) sensor	12	4	Middle of engine compartment		
Back-up light switch	17	2	On the transmission housing		
Camshaft position (CMP) sensor A	22	3	Middle of engine compartment		
Camshaft position (CMP) sensor B	11	3	Middle of engine compartment		
ECM connector B	19	49	Left side of engine compartment		
ECM connector C	18	49	Left side of engine compartment		
Engine coolant temperature (ECT) sensor 1	20	2	Middle of engine compartment		
Engine mount control solenoid	30	2	Middle of engine compartment		
EVAP canister purge valve	16	2	Middle of engine compartment		
Ignition coil No. 1	6	3	Middle of engine compartment		
Ignition coil No. 2	7	3	Middle of engine compartment		
Ignition coil No. 3	8	3	Middle of engine compartment		
Ignition coil No. 4	9	3	Middle of engine compartment		
Injector No. 1	29	2	Middle of engine compartment		
Injector No. 2	28	2	Middle of engine compartment		
Injector No. 3	27	2	Middle of engine compartment		
Injector No. 4	26	2	Middle of engine compartment		
Manifold absolute pressure (MAP) sensor	25	3	Middle of engine compartment		
Mass air flow (MAF) sensor/Intake air temperature (IAT) sensor	15	5	Air cleaner housing cover		
Oil pressure switch	2	1	Middle of engine compartment		
Output shaft (countershaft) speed sensor	21	3	Front of transmission housing		
Rocker arm oil control solenoid	4	2	Middle of engine compartment		
Rocker arm oil pressure switch	5	2	Middle of engine compartment		
Secondary HO2S	3	4	Middle of engine compartment		
Throttle position sensor/Throttle actuator	23	6	Middle of engine compartment		
VTC oil control solenoid valve	1	2	Middle of engine compartment		
C101	14	23	Left side of engine compartment	Left engine compartment wire harness (see page 22-28)	
C102	24	6	Left side of engine compartment	Starter subharness (see page 22-18)	
C103 (junction connector)	10	24	Middle of engine compartment		
C104	13	3	Middle of engine compartment	CKP sensor subharness (see page 22-24)	
G101	31		Middle of engine compartment	Body ground, via engine wire harness	
G102	32		Middle of engine compartment	Body ground, via engine wire harness	

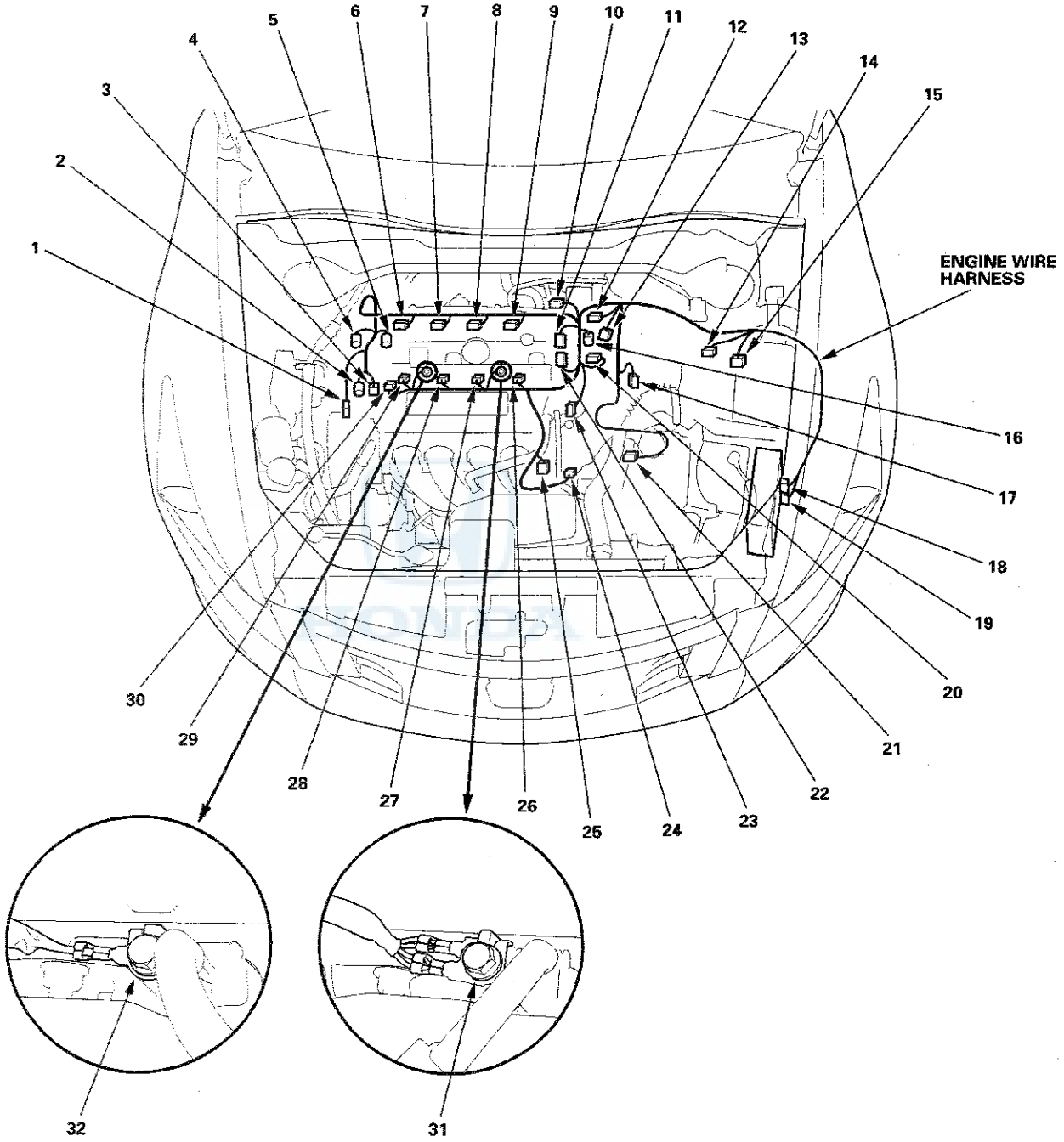
1
2
3
4
5
6
7
8
9
10
11
12
13
14
15
ENGINE WIRE HARNESS
16
17
18
19
20
21
22
23
24
25
26
27
28
29
30
31
32

Connector to Harness Index (cont'd)

Engine Wire Harness (A/T)

Connector or Terminal	Ref	Cavities	Location	Connects to	Notes
Air fuel ratio (A/F) sensor	12	4	Exhaust manifold		
A/T clutch pressure control solenoid valve A	22	2	Transmission housing		
A/T clutch pressure control solenoid valve B	26	2	Transmission housing		
A/T clutch pressure control solenoid valve C	25	2	Transmission housing		
Camshaft position (CMP) sensor A	31	3	Middle of engine compartment		
Camshaft position (CMP) sensor B	11	3	Middle of engine compartment		
Engine coolant temperature (ECT) sensor 1	28	2	Middle of engine compartment		
Engine mount control solenoid	37	2	Middle of engine compartment		
EVAP canister purge valve	19	2	Middle of engine compartment		
Ignition coil No. 1	5	3	Middle of engine compartment		
Ignition coil No. 2	7	3	Middle of engine compartment		
Ignition coil No. 3	8	3	Middle of engine compartment		
Ignition coil No. 4	9	3	Middle of engine compartment		
Injector No. 1	36	2	Middle of engine compartment		
Injector No. 2	35	2	Middle of engine compartment		
Injector No. 3	34	2	Middle of engine compartment		
Injector No. 4	33	2	Middle of engine compartment		
Input shaft (mainshaft) speed sensor	15	3	Transmission housing		
Manifold absolute pressure (MAP) sensor	32	3	Middle of engine compartment		
Mass air flow (MAF) sensor/Intake air temperature (IAT) sensor	17	5	Middle of engine compartment		
Oil pressure switch	1	1	Middle of engine compartment		
Output shaft (countershaft) speed sensor	14	3	Transmission housing		
PCM connector B	21	49	Left side of engine compartment		
PCM connector C	20	49	Left side of engine compartment		
Rocker arm oil control solenoid (EX)	4	2	Middle of engine compartment		
Rocker arm oil control solenoid (IN)	3	2	Middle of engine compartment		
Rocker arm oil pressure switch (EX)	6	2	Middle of engine compartment		
Rocker arm oil pressure switch (IN)	2	2	Middle of engine compartment		
Secondary HO2S	38	4	Exhaust manifold		
Throttle position sensor/Throttle actuator	29	6	Middle of engine compartment		
VTC oil control solenoid valve	39	2	Middle of engine compartment		
2nd clutch pressure switch	23	1	Transmission housing		
3rd clutch pressure switch	24	1	Transmission housing		
C101	16	23	Left side of engine compartment	Left engine compartment wire harness (see page 22-28)	
C102	30	6	Left side of engine compartment	Starter subharness (see page 22-18)	
C103 (junction connector)	10	24	Middle of engine compartment		
C104	13	3	Middle of engine compartment	CKP sensor subharness (see page 22-24)	
C105	27	8	Transmission housing	Shift solenoid wire harness (see page 22-24)	
C106	18	10	Transmission housing	Transmission range switch subharness (see page 22-24).	
G101	40		Middle of engine compartment	Body ground, via engine wire harness	
G102	41		Middle of engine compartment	Body ground, via engine wire harness	

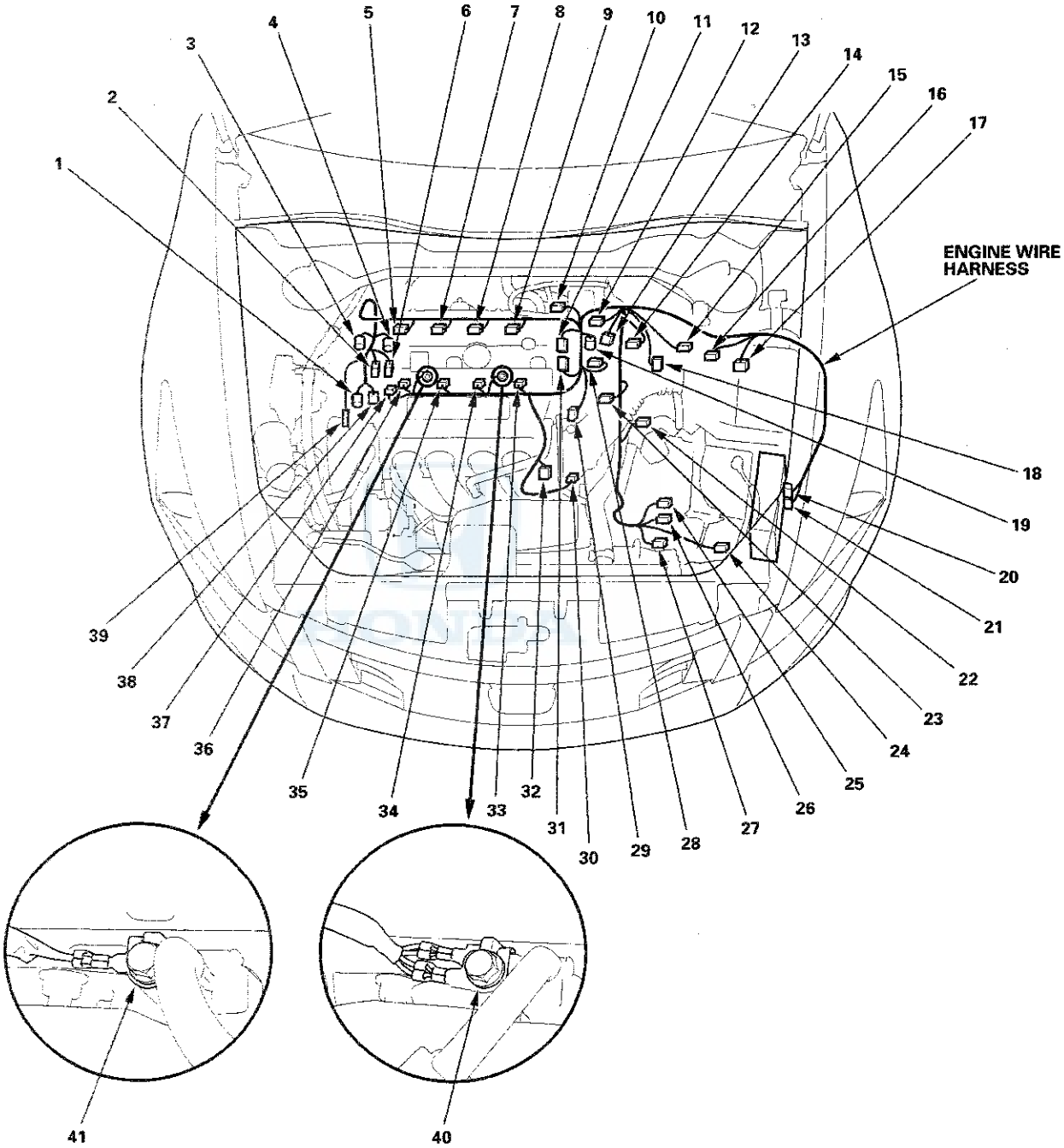
ENGINE WIRE HARNESS
1
2
3
4
5
6
7
8
9
10
11
12
13
14
15
16
17
18
19
20
21
22
23
24
25
26
27
28
29
30
31
32
33
34
35
36
37
38
39
40
41

Connector to Harness Index (cont'd)

CKP Sensor Subharness

Connector or Terminal	Ref	Cavities	Location	Connects to	Notes
CKP sensor	1	3	Under the engine		
C104	2	3	Middle of engine compartment	Engine wire harness M/T (see page 22-20) A/T (see page 22-22)	

Shift Solenoid Wire Harness (A/T)

Connector or Terminal	Ref	Cavities	Location	Connects to	Notes
ATF temperature sensor	9	1	In the transmission		
Shift solenoid valve A	8	1	In the transmission		
Shift solenoid valve B	6	1	In the transmission		
Shift solenoid valve C	5	1	In the transmission		
Shift solenoid valve E	7	1	In the transmission		
C105	10	8	Transmission housing	Engine wire harness (see page 22-22)	

Transmission Range Switch Subharness (A/T)

Connector or Terminal	Ref	Cavities	Location	Connects to	Notes
Transmission range switch	4	10	Left side of transmission		
C106	3	8	Transmission housing	Engine wire harness (see page 22-22)	

HONDA

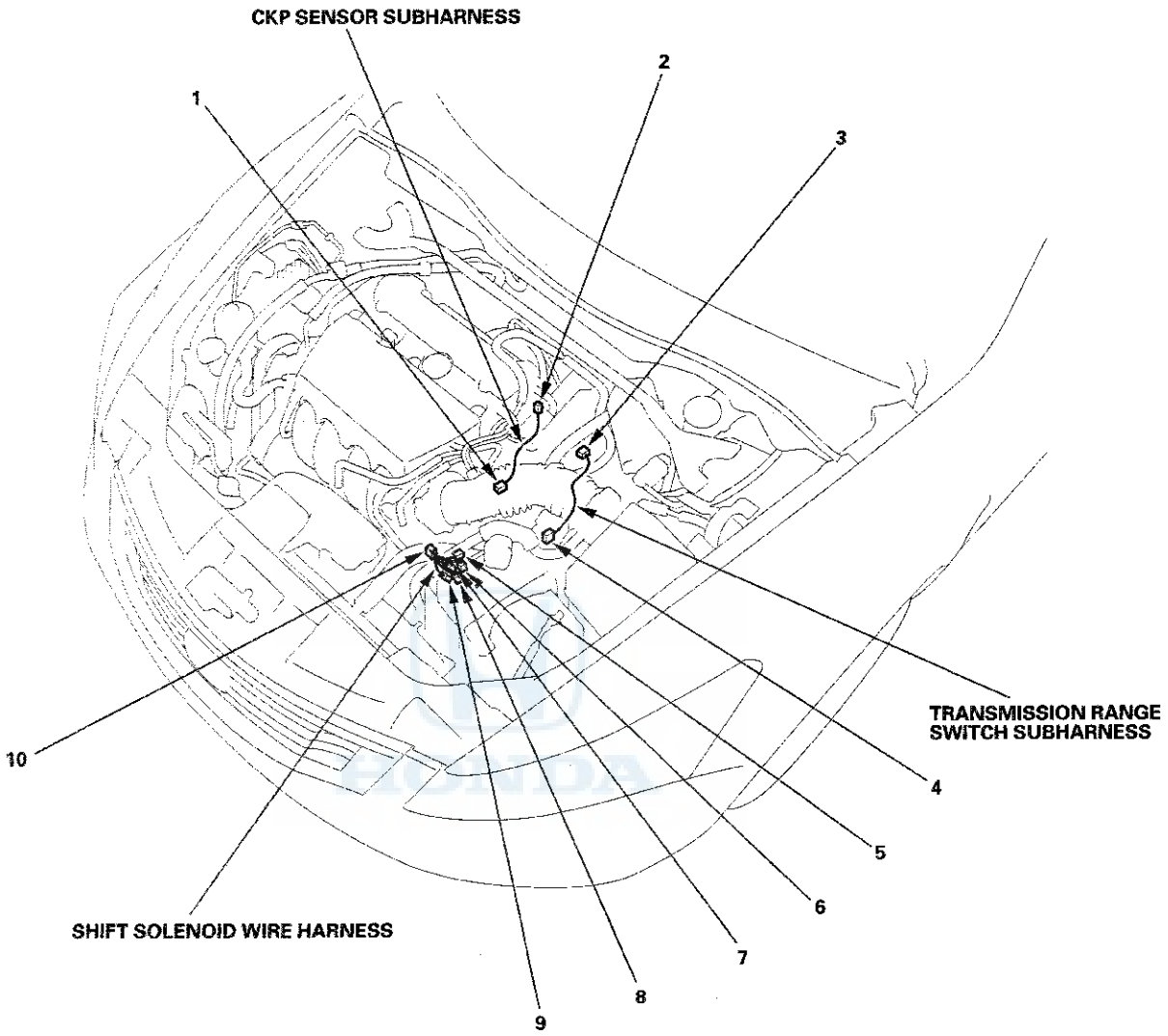
CKP SENSOR SUBHARNESS
1
2
3
TRANSMISSION RANGE
SWITCH SUBHARNESS
4
5
6
7
8
9
10
SHIFT SOLENOID WIRE HARNESS

Connector to Harness Index (cont'd)

Right Engine Compartment Wire Harness

Connector or Terminal	Ref	Cavities	Location	Connects to	Notes
A/C pressure switch	4	2	Right front of engine compartment		
Optional connector (for fog light)	12	1	Right front of engine compartment		
Passenger's under-dash fuse/relay box connector E (see page 22-76)	17	18	Under right side of dash		
Power steering pressure (PSP) switch	2	2	Right side of engine compartment		
Right front impact sensor	6	2	Behind right side of front bumper		
Right front wheel speed sensor	16	2	Right side of engine compartment		
Right front parking/turn signal light	5	3	Behind right headlight		
Right front side marker light	14	2	Behind right headlight		
Right headlight (low)	11	2	Behind right headlight		
Right headlight (high)	13	2	Behind right headlight		
VSA modulator-control unit	15	22	Right side of engine compartment		
Washer fluid level switch	10	2	Behind right side of front bumper		*
Washer motor	9	2	Behind right side of front bumper		
C201	3	2	Right front of engine compartment	Left engine compartment wire harness (see page 22-28)	
C202	19	20	Under right side of dash	Dashboard wire harness (see page 22-36)	
C203	18	4	Under right side of dash	Dashboard wire harness (see page 22-36)	
G201	1		Under right side of dash	Body ground, via right engine compartment wire harness	
G202	8		Behind right side of front bumper	Body ground, via right engine compartment wire harness	
G203	7		Behind right side of front bumper	Body ground, via right engine compartment wire harness	

* : Canada models

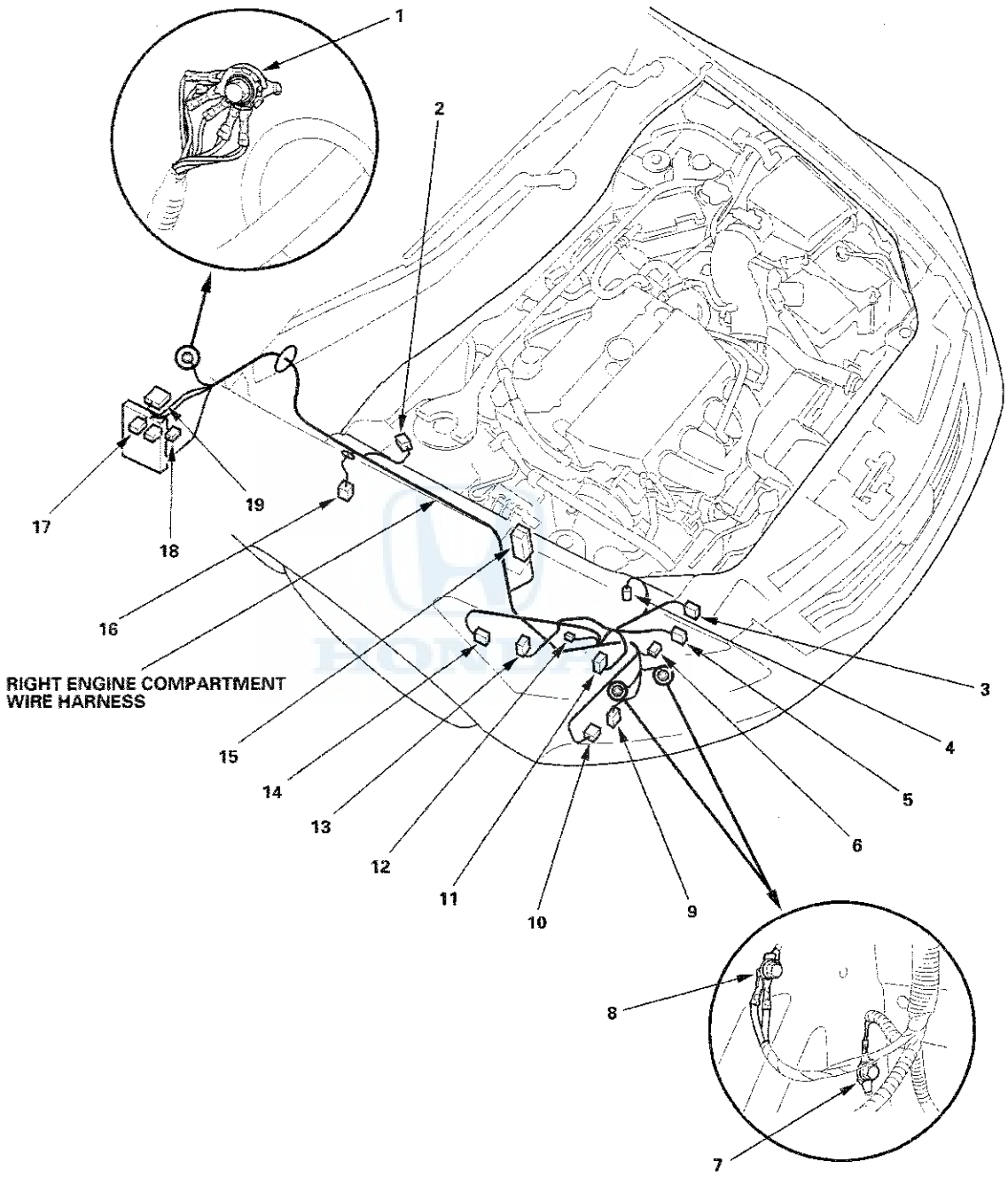
1
2
3
4
5
6
7
8
9
10
11
12
13
14
15
16
17
18
19
RIGHT ENGINE COMPARTMENT
WIRE HARNESS

Connector to Harness Index (cont'd)

Left Engine Compartment Wire Harness (Engine compartment branch)

Connector or Terminal	Ref	Cavities	Location	Connects to	Notes
A/C condenser fan motor	20	2	Front of engine compartment		
Brake fluid level switch	6	2	Left side of engine compartment		
ECM connector A	9	49	Left side of engine compartment		M/T
Engine coolant temperature (ECT) sensor 2	18	2	Front of engine compartment		
Hood switch	21	2	Front of engine compartment		Security
Horn (high)	23	1	Front of engine compartment		
Horn (low)	19	1	Front of engine compartment		
Left front impact sensor	14	2	Behind left side of front bumper		
Left front wheel speed sensor	8	2	Left side of engine compartment		
Left front parking/turn signal light	16	3	Behind left headlight		
Left front side marker light	10	2	Behind left headlight		
Left headlight (low)	11	2	Behind left headlight		
Left headlight (high)	15	2	Behind left headlight		
Optional connector (for fog light)	12	1	Left front of engine compartment		
Outside air temperature sensor	22	2	Front of engine compartment		
PCM connector A	9	49	Left side of engine compartment		A/T
Radiator fan motor	17	2	Front of engine compartment		
Under-hood fuse/relay box connector A (electrical load detector) (see page 22-74)	3	3	Left side of engine compartment		
Under-hood fuse/relay box connector B (see page 22-74)	5	14	Left side of engine compartment		
Under-hood fuse/relay box connector C (see page 22-74)	4	5	Left side of engine compartment		
Wiper motor	7	5	Left side of engine compartment		
C101	2	23	Left side of engine compartment	Engine wire harness M/T (see page 22-20) A/T (see page 22-22)	
C151	1	1	Left side of engine compartment	Starter wire harness (see page 22-18)	
C201	24	2	Right front of engine compartment	Right engine compartment wire harness (see page 22-26)	
G301	13		Behind left side of front bumper	Body ground, via left engine compartment wire harness	

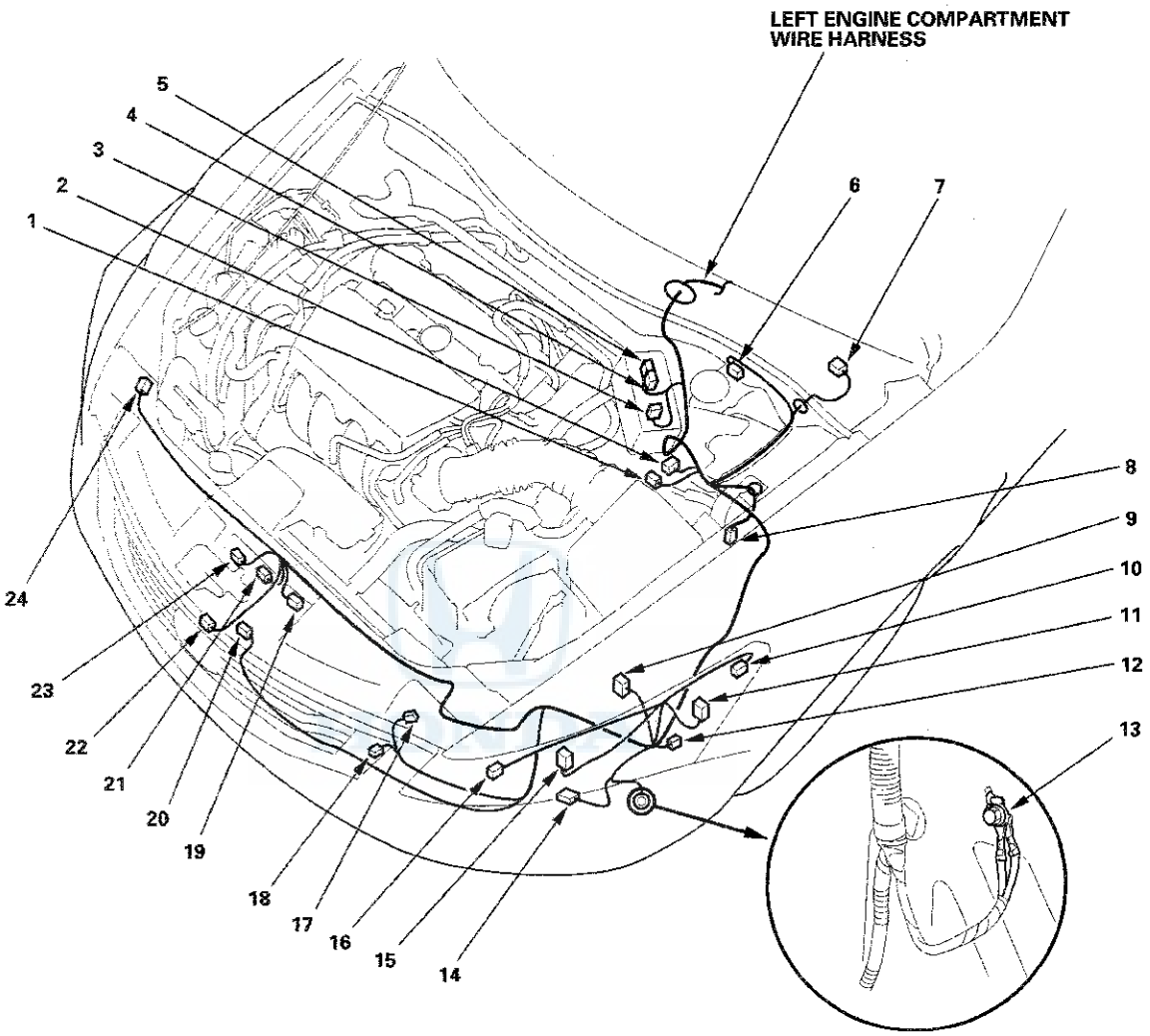
LEFT ENGINE COMPARTMENT
WIRE HARNESS
1
2
3
4
5
6
7
8
9
10
11
12
13
14
15
16
17
18
19
20
21
22
23
24

Connector to Harness Index (cont'd)

Left Engine Compartment Wire Harness (Dash branch)

Connector or Terminal	Ref	Cavities	Location	Connects to	Notes
Accelerator pedal position sensor	11	6	Under left side of dash		
Brake pedal position switch	12	4	Under left side of dash		
Clutch pedal position switch (for cruise control)	14	3	Under left side of dash		M/T
Clutch interlock switch (for starter cut)	13	2	Under left side of dash		M/T
Diode (for A/T)	8	2	Under left side of dash		A/T
Diode (for A/T)	9	2	Under left side of dash		A/T
Driver's under-dash fuse/relay box connector F (see page 22-75)	7	33	Under left side of dash		
Driver's under-dash fuse/relay box connector G (see page 22-75)	6	13	Under left side of dash		
C301	5	20	Under left side of dash	Dashboard wire harness (see page 22-32)	
C302	3	2	Under left side of dash	Dashboard wire harness (see page 22-32)	
C303	4	4	Under left side of dash	Dashboard wire harness (see page 22-32)	
C304	2	8	Under left side of dash	Left side wire harness 4-door (see page 22-50) 2-door (see page 22-52)	
C351	10	2	Under left side of dash	A/C wire harness (see page 22-70) A/C wire harness (see page 22-71) A/C wire harness (see page 22-72)	* 1 * 2 * 3
G302	1		Under left side of dash	Body ground, via left engine compartment wire harness	

* 1: With climate control and navigation system
* 2: With climate control without navigation system
* 3: With HVAC control

HONDA

LEFT ENGINE COMPARTMENT WIRE HARNESS

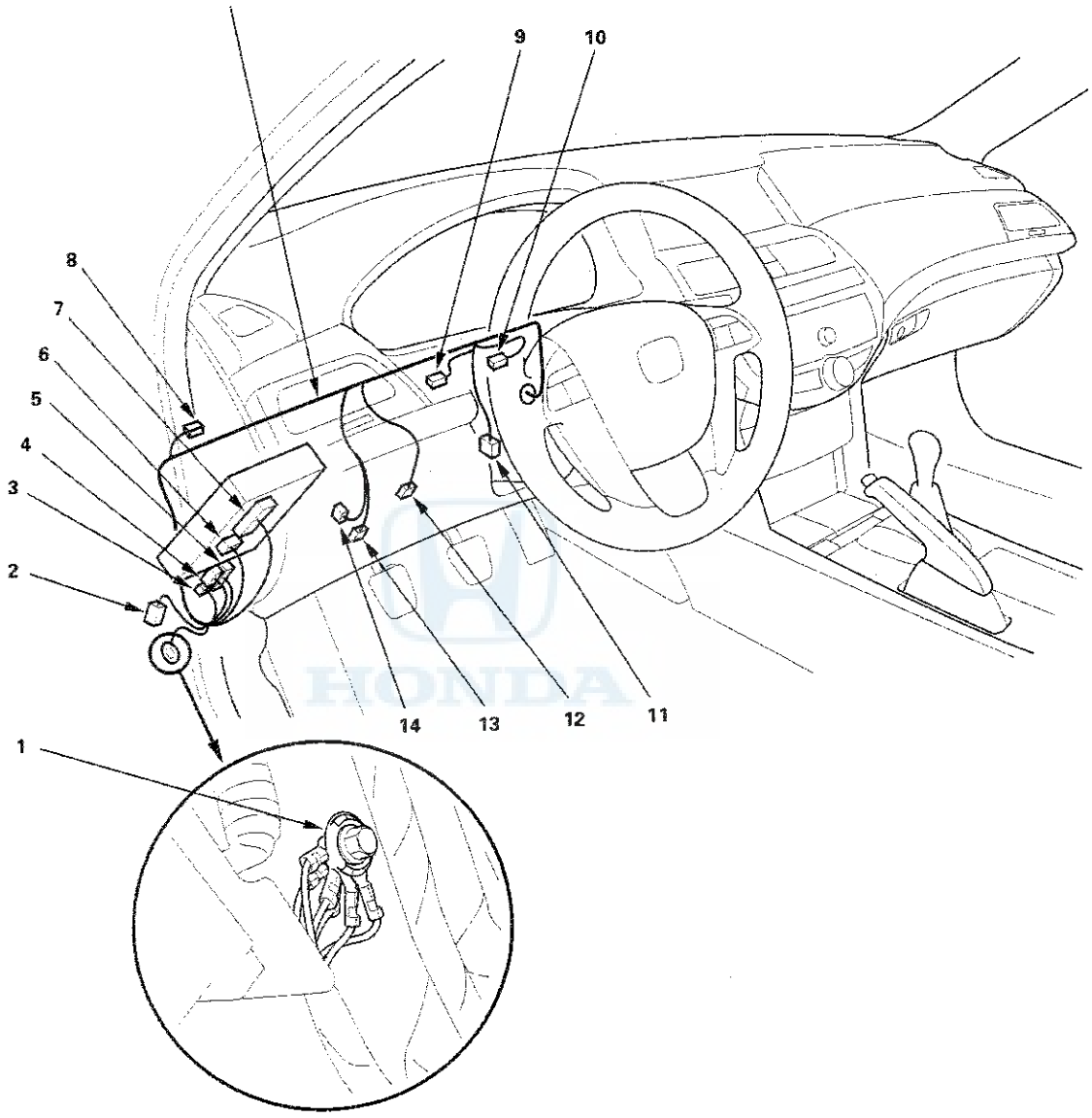

Connector to Harness Index (cont'd)

Dashboard Wire Harness (View of driver's side)

Connector or Terminal	Ref	Cavities	Location	Connects to	Notes
Data link connector (DLC)	32	16	Under left side of dash		
Driver's crossover network unit	27	8	Under left side of dash		* 1
Driver's under-dash fuse/relay box connector B (see page 22-75)	31	2	Under left side of dash		
Driver's under-dash fuse/relay box connector C (see page 22-75)	28	5	Under left side of dash		
Driver's under-dash fuse/relay box connector M (see page 22-75)	26	2	Under left side of dash		
Driver's under-dash fuse/relay box connector N (see page 22-75)	24	16	Under left side of dash		
Driver's under-dash fuse/relay box connector P (see page 22-75)	22	20	Under left side of dash		
Driver's under-dash fuse/relay box connector Q (see page 22-75)	25	20	Under left side of dash	Driver's MICU	
Driver's under-dash fuse/relay box connector R (see page 22-75)	23	24	Under left side of dash	Driver's MICU	
Driver's junction box 1 connector A	13	6	Under left side of dash		
Driver's junction box 1 connector B	14	6	Under left side of dash		
Driver's junction box 1 connector C	15	8	Under left side of dash		
Driver's junction box 1 connector D	16	4	Under left side of dash		
Driver's junction box 1 connector E	17	10	Under left side of dash		
Driver's junction box 1 connector F	19	8	Under left side of dash		
Driver's junction box 1 connector G	18	10	Under left side of dash		
Driver's junction box 1 connector H	20	10	Under left side of dash		
Driver's junction box 2 connector A	1	4	Under left side of dash		
Driver's junction box 2 connector B	2	4	Under left side of dash		
Driver's junction box 2 connector C	3	4	Under left side of dash		
Driver's junction box 2 connector D	4	6	Under left side of dash		
Driver's junction box 2 connector E	10		Under left side of dash		
Driver's junction box 2 connector F	5	6	Under left side of dash		
Driver's junction box 2 connector G	6	6	Under left side of dash		
Driver's junction box 2 connector H	9	4	Under left side of dash		
Driver's junction box 2 connector J	8	8	Under left side of dash		
Driver's junction box 2 connector K	7	10	Under left side of dash		
Gauge control module	21	32	Behind gauge panel		
HandsFreeLink control unit	29	28	Under left side of dash		
VSA OFF switch	30	5	Left side of dashboard		

* 1: With premium audio system

HONDA

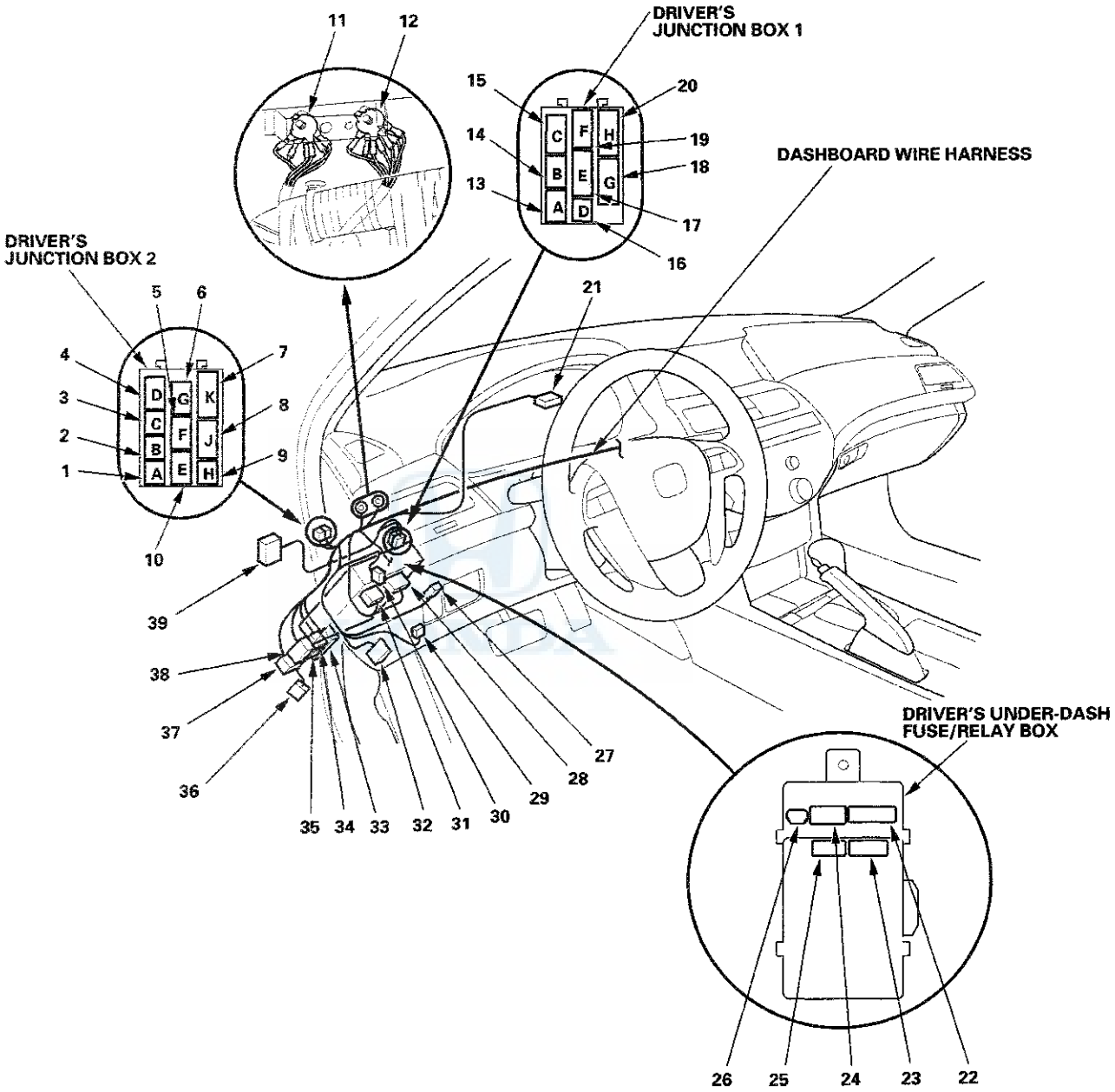
DRIVER'S JUNCTION BOX 1
DRIVER'S JUNCTION BOX 2
DASHBOARD WIRE HARNESS
DRIVER'S UNDER-DASH FUSE/RELAY BOX
1
2
3
4
5
6
7
8
9
10
11
12
13
14
15
16
17
18
19
20
21
22
23
24
25
26
27
28
29
30
31
32
33
34
35
36
37
38
39
A
B
C
D
E
F
G
H
J
K

(cont'd)

Connector to Harness Index (cont'd)

Dashboard Wire Harness (View of driver's side)

Connector or Terminal	Ref	Cavities	Location	Connects to	Notes
C301	33	20	Under left side of dash	Left engine compartment wire harness (see page 22-30)	
C302	34	2	Under left side of dash	Left engine compartment wire harness (see page 22-30)	
C303	35	4	Under left side of dash	Left engine compartment wire harness (see page 22-30)	
C501	38	20	Under left side of dash	Roof wire harness (see page 22-58)	* 2
C501	38	4	Under left side of dash	Roof wire harness (see page 22-59)	* 3
C502	37	4	Under left side of dash	Roof wire harness (see page 22-58)	* 2
C601	36	28	Under left side of dash	Left side wire harness 4-door (see page 22-50) 2-door (see page 22-52)	* 4
C601	36	12	Under left side of dash	Left side wire harness 4-door (see page 22-50) 2-door (see page 22-52)	* 5
C751	39	20	Under left side of dash	Driver's door wire harness 4-door (see page 22-60) 2-door (see page 22-61)	
G501	11		Under left side of dash	Body ground, via dashboard wire harness	
G502	12		Under left side of dash	Body ground, via dashboard wire harness	

* 2: With moonroof
* 3: Without moonroof
* 4: Except LX, LX PZEV, LX-P, LX-P PZEV, LX-S, LX-S PZEV
* 5: LX, LX PZEV, LX-P, LX-P PZEV, LX-S, LX-S PZEV

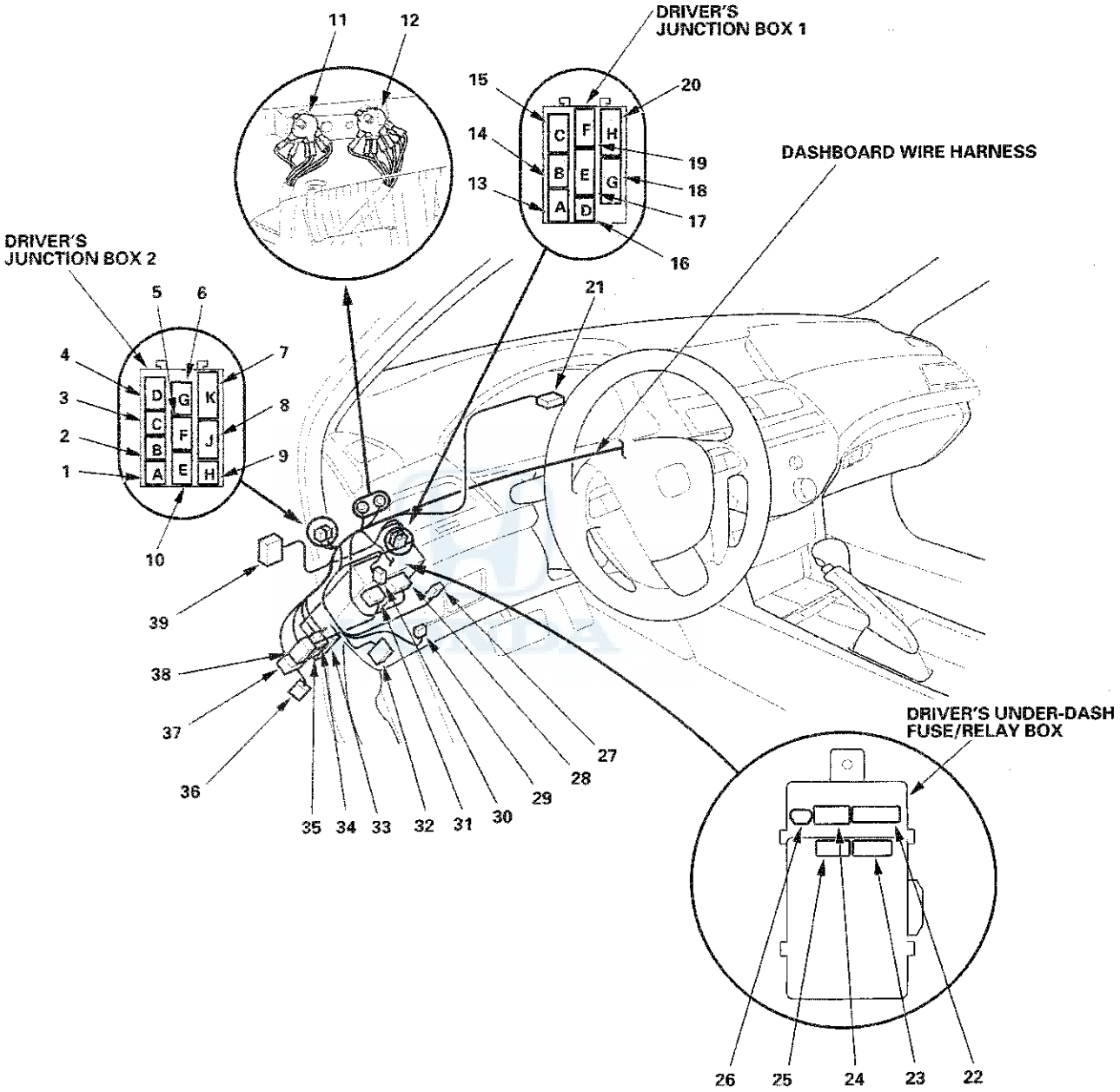
DRIVER'S JUNCTION BOX 1
DRIVER'S JUNCTION BOX 2
DASHBOARD WIRE HARNESS
DRIVER'S UNDER-DASH FUSE/RELAY BOX
1
2
3
4
5
6
7
8
9
10
11
12
13
14
15
16
17
18
19
20
21
22
23
24
25
26
27
28
29
30
31
32
33
34
35
36
37
38
39

Connector to Harness Index (cont'd)

Dashboard Wire Harness (View of middle to passenger's side)

Connector or Terminal	Ref	Cavities	Location	Connects to	Notes
A/T gear position indicator panel light/ park-pin switch	26	6	Under center console		A/T
A/T shift lock solenoid	28	2	Under center console		A/T
Auxiliary jack	30	5	Rear of center console		
Cable reel connector A	4	20	In steering column	Cable reel subharness via cable reel (see page 22-73)	
Center junction box connector A	39	4	Under middle of dash		
Center junction box connector B	40	4	Under middle of dash		
Center junction box connector C	41	4	Under middle of dash		
Center junction box connector D	42	6	Under middle of dash		
Center junction box connector E	38	6	Under middle of dash		
Center junction box connector F	43	6	Under middle of dash		
Center junction box connector G	44	6	Under middle of dash		
Center junction box connector H	37	4	Under middle of dash		
Center junction box connector J	36	8	Under middle of dash		
Center junction box connector K	35	10	Under middle of dash		
Combination light switch	3	12	In steering column		
Driver's airbag inflator	5	4	In steering column		
Driver's seat heater switch	33	6	Under center console		With seat heater
Front accessory power socket	26	2	Under center console		
Front passenger's airbag inflator	16	4	Under right side of dash		
Front passenger's seat heater switch	25	7	Under center console		With seat heater
Ignition key switch	8	6	In steering column		
Ignition switch	1	5	In steering column		
Immobilizer-keyless control unit	7	7	In steering column		
Parking brake switch	32	1	Center console		
Passenger's under-dash fuse/relay box connector A (see page 22-75)	21	38	Under right side of dash		
Passenger's under-dash fuse/relay box connector B (see page 22-75)	22	1	Under right side of dash		
Rear accessory power socket	31	2	Rear of center console		
Rear accessory power socket relay	9	4	Under left side of dash		
SRS unit connector A	24	39	Under middle of dash		
Steering angle sensor	2	5	In steering column		
TPMS control unit	10	20	Under left side of dash		
Yaw rate-lateral acceleration sensor	29	5	Under center console		
Wiper/washer switch	6	8	In steering column		

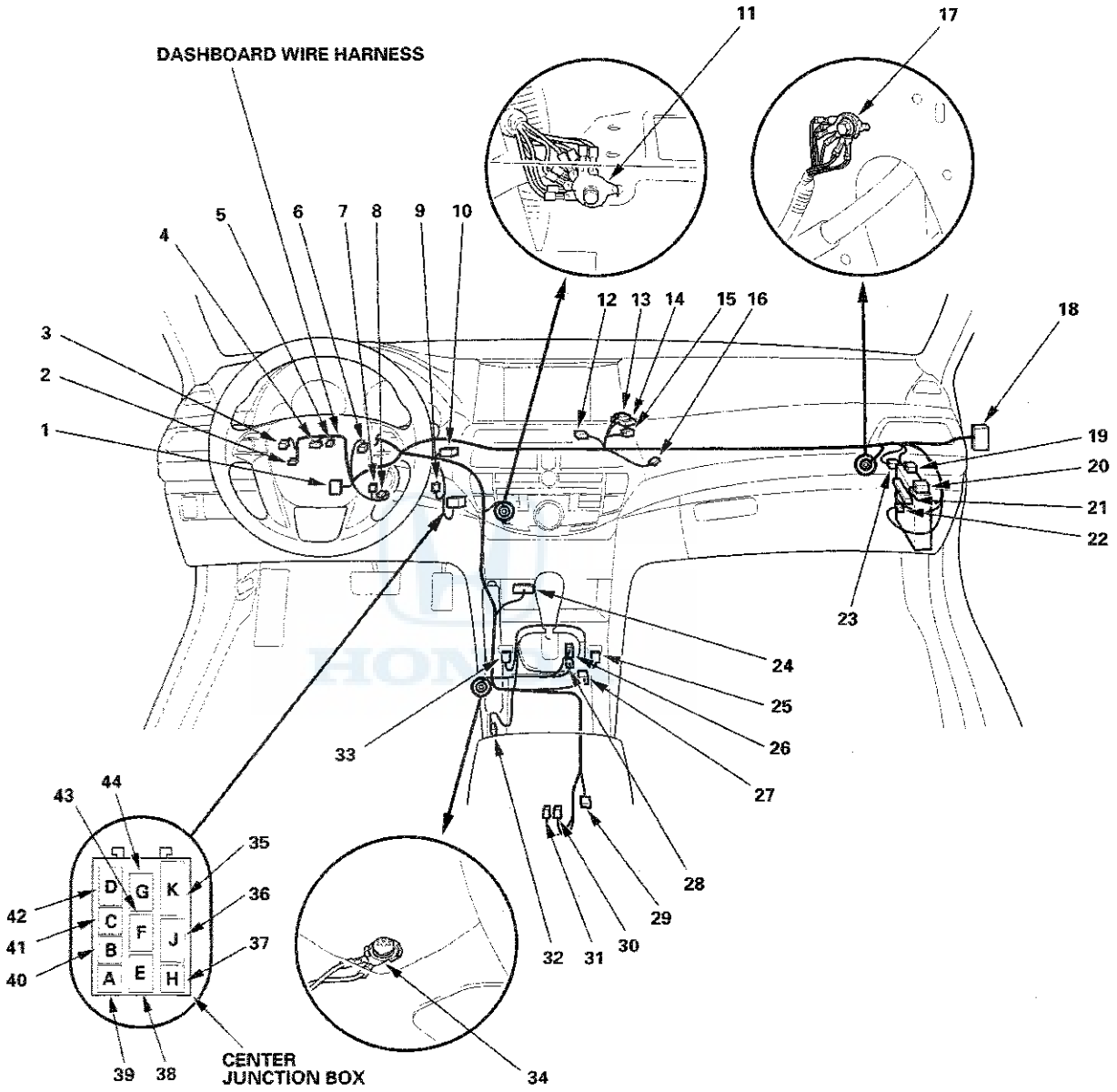
DASHBOARD WIRE HARNESS
1
2
3
4
5
6
7
8
9
10
11
12
13
14
15
16
17
18
19
20
21
22
23
24
25
26
27
28
29
30
31
32
33
34
35
36
37
38
39
40
41
42
43
44
D
G
K
C
F
J
B
A
E
H
CENTER
JUNCTION BOX

(cont'd)

Connector to Harness Index (cont'd)

Dashboard Wire Harness (View of middle to passenger's side) (cont'd)

Connector or Terminal	Ref	Cavities	Location	Connects to	Notes
C202	19	20	Under left side of dash	Right engine compartment wire harness (see page 22-26)	
C203	23	4	Under left side of dash	Right engine compartment wire harness (see page 22-26)	
C401	14	24	Under middle of dash	Audio wire harness (see page 22-40)	* 1
				Audio wire harness (see page 22-42)	* 2
				Audio wire harness (see page 22-44)	* 3
C402	13	18	Under middle of dash	Audio wire harness (see page 22-40)	* 1
				Audio wire harness (see page 22-42)	* 2
C403	15	16	Under middle of dash	Audio wire harness (see page 22-40)	* 1
				Audio wire harness (see page 22-42)	* 2
				Audio wire harness (see page 22-44)	* 3
C503 (B-CAN junction connector)	12	12	Under right side of dash		* 4
C651	20	16	Under right side of dash	Right side wire harness 4-door (see page 22-46) 2-door (see page 22-48)	
C701	27	13	Under center console	SRS floor wire harness 4-door (see page 22-54) 2-door (see page 22-56)	With power seat
C701	27	2	Under center console	SRS floor wire harness 4-door (see page 22-54) 2-door (see page 22-56)	Without power seat
C761	18	13	Under right side of dash	Front passenger's door wire harness (see page 22-62)	4-door
C761	18	13	Under right side of dash	Passenger's door wire harness (see page 22-63)	2-door
G503	11		Under middle of dash	Body ground, via dashboard wire harness	
G504	34		Under center console	Body ground, via dashboard wire harness	
G505	17		Under right side of dash	Body ground, via dashboard wire harness	

* 1: With premium audio system and navigation system
* 2: With premium audio system without navigation system
* 3: Without premium audio system
* 4: With premium audio system or climate control

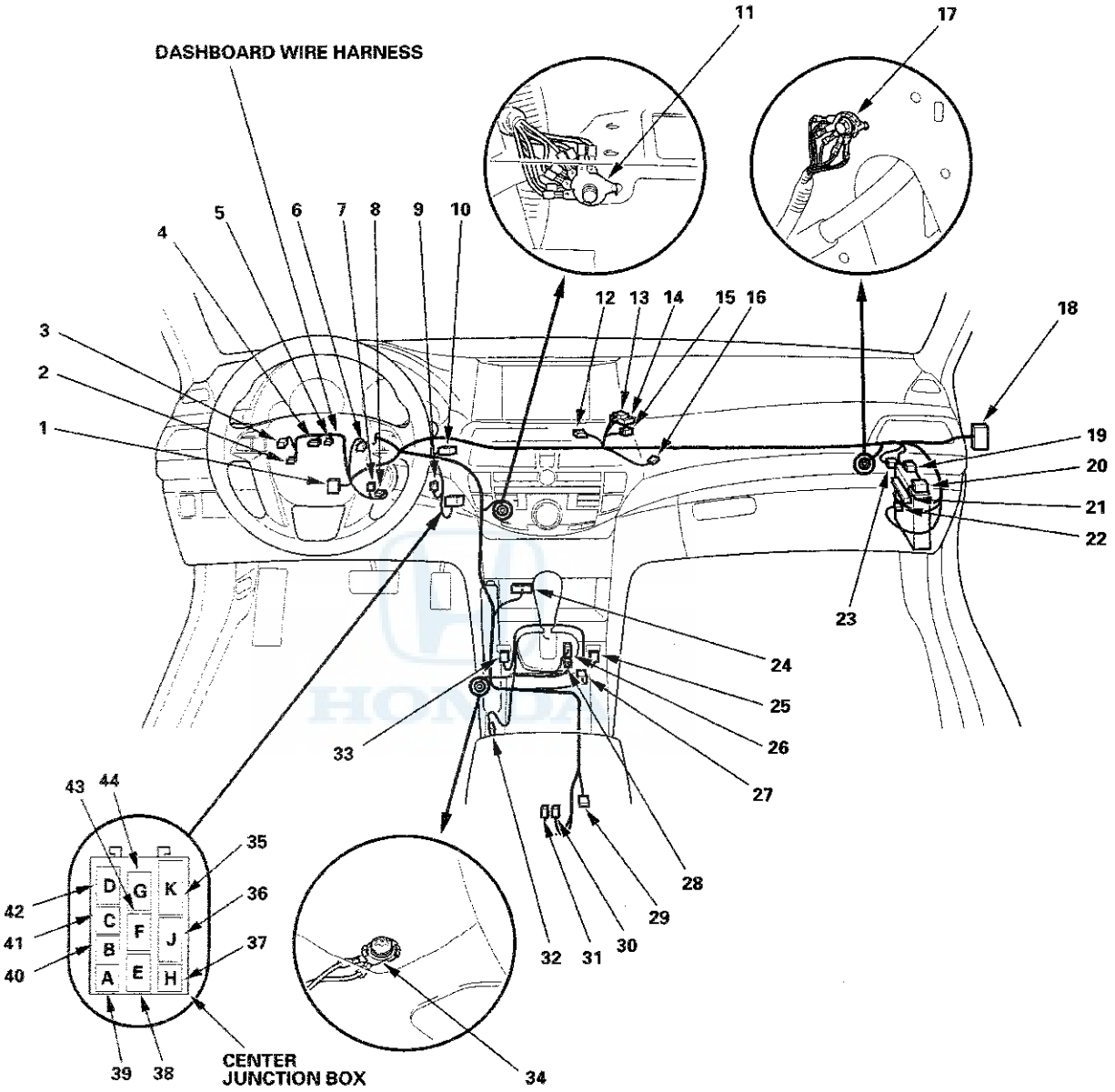
DASHBOARD WIRE HARNESS
1
2
3
4
5
6
7
8
9
10
11
12
13
14
15
16
17
18
19
20
21
22
23
24
25
26
27
28
29
30
31
32
33
34
35
36
37
38
39
40
41
42
43
44
D
G
K
C
F
J
B
A
E
H
CENTER
JUNCTION BOX

Connector to Harness Index (cont'd)

Audio Wire Harness (With Premium Audio System and Navigation System)

Connector or Terminal	Ref	Cavities	Location	Connects to	Notes
Antenna lead connector	11	3	Under right side of dash	AM/FM antenna amplifier	
Audio disc changer	24	14	Under middle of dash		
Audio-HVAC subdisplay unit	2	12	Middle of dash		
Audio unit connector A	26	24	Under middle of dash		
Audio unit connector B	28	20	Under middle of dash		
Audio unit connector C	31	16	Under middle of dash		
Audio unit connector D	25	8	Under middle of dash		
Audio unit connector E	27	14	Under middle of dash		
Audio unit connector F	29	3	Under middle of dash		
Audio unit connector G	30	14	Under middle of dash		* 2
Automatic lighting/sunlight sensor	4	5	Middle of dash		* 1
Driver's climate control switch	32	16	Under middle of dash		
Glove box light	15	2	Glove box		
Hazard warning switch/Passenger's airbag cutoff indicator	1	6	Middle of dash		
Interface dial	33	5	Middle of dash		
Navigation display unit	3	28	Middle of dash		
Passenger's climate control switch	34	12	Under middle of dash		
Passenger's network unit	23	8	Under middle of dash		
Passenger's under-dash fuse/relay box connector D (see page 22-76)	14	28	Under right side of dash		
Stereo amplifier connector A	10	24	Under right side of dash		
Stereo amplifier connector B	9	18	Under right side of dash		
C401	6	24	Middle of dash	Dashboard wire harness (see page 22-36)	
C402	5	18	Middle of dash	Dashboard wire harness (see page 22-36)	
C403	7	16	Middle of dash	Dashboard wire harness (see page 22-36)	
C404 (optional connector for rearview camera)	8	6	Middle of dash		
C405 (junction connector)	16	12	Under middle of dash		
C406 (junction connector)	17	12	Under middle of dash		
C407 (junction connector)	18	12	Under middle of dash		
C408 (junction connector)	19	12	Under middle of dash		
C409	22	20	Under middle of dash	A/C wire harness (see page 22-70)	
C410	13	20	Under right side of dash	Right side wire harness 4-door (see page 22-46) 2-door (see page 22-48)	
C411	14	20	Under right side of dash	Right side wire harness 4-door (see page 22-46) 2-door (see page 22-48)	
G401	20		Under middle of dash	Body ground, via audio wire harness	
G402	21		Under middle of dash	Body ground, via audio wire harness	

* 1: With automatic lighting
* 2: With XM radio

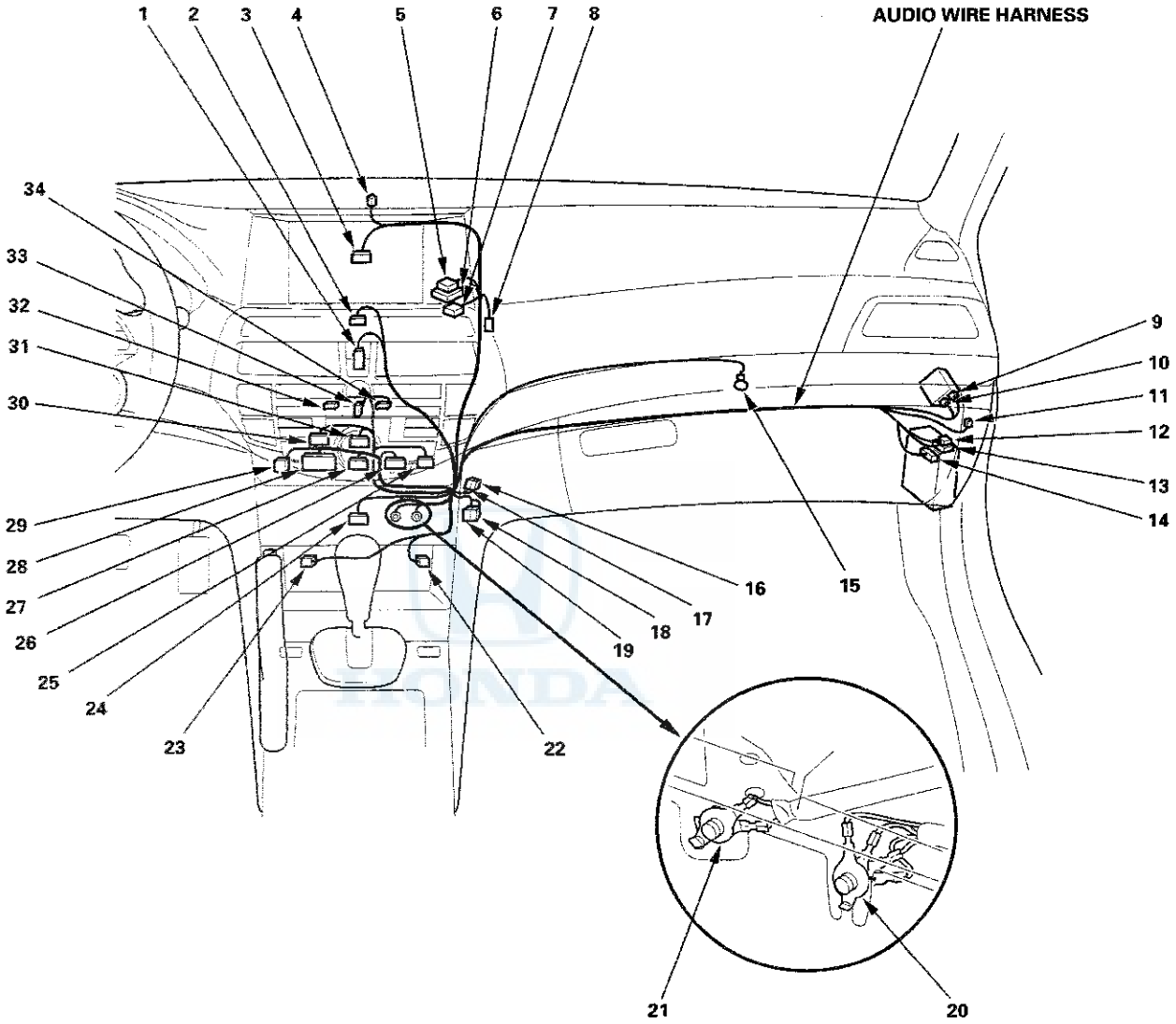
AUDIO WIRE HARNESS
1
2
3
4
5
6
7
8
9
10
11
12
13
14
15
16
17
18
19
20
21
22
23
24
25
26
27
28
29
30
31
32
33
34

Connector to Harness Index (cont'd)

Audio Wire Harness (With Premium Audio System without Navigation System)

Connector or Terminal	Ref	Cavities	Location	Connects to	Notes
Antenna lead connector	11	3	Under right side of dash	AM/FM antenna amplifier	
Audio unit connector A	24	24	Under middle of dash		
Audio unit connector B	26	20	Under middle of dash		
Audio unit connector C	28	16	Under middle of dash		
Audio unit connector D	23	8	Under middle of dash		
Audio unit connector E	25	14	Under middle of dash		
Audio unit connector F	27	3	Under middle of dash		
Automatic lighting/sunlight sensor	3	5	Middle of dash		* 1
Audio-HVAC display unit	5	12	Middle of dash		
Climate control unit connector A	4	28	Middle of dash		* 3
Climate control unit connector B	1	12	Middle of dash		* 3
Glove box light	15	2	Glove box		
Hazard warning switch/Passenger's airbag cutoff indicator	2	6	Middle of dash		
Passenger's network unit	22	8	Under middle of dash		
Passenger's under-dash fuse/relay box connector D (see page 22-76)	14	28	Under right side of dash		
Stereo amplifier connector A	10	24	Under right side of dash		
Stereo amplifier connector B	9	18	Under right side of dash		
Sunlight sensor	3	2	Middle of dash		* 2
C401	7	24	Middle of dash	Dashboard wire harness (see page 22-36)	
C402	6	18	Middle of dash	Dashboard wire harness (see page 22-36)	
C403	8	16	Middle of dash	Dashboard wire harness (see page 22-36)	
C405 (junction connector)	15	12	Under middle of dash		
C406 (junction connector)	16	12	Under middle of dash		
C407 (junction connector)	17	12	Under middle of dash		
C408 (junction connector)	18	12	Under middle of dash		
C409	21	20	Under middle of dash	A/C wire harness (see page 22-71)	
C410	12	20	Under right side of dash	Right side wire harness 4-door (see page 22-46) 2-door (see page 22-48)	
G401	19		Under middle of dash	Body ground, via audio wire harness	
G402	20		Under middle of dash	Body ground, via audio wire harness	

* 1: With automatic lighting
* 2: Without automatic lighting

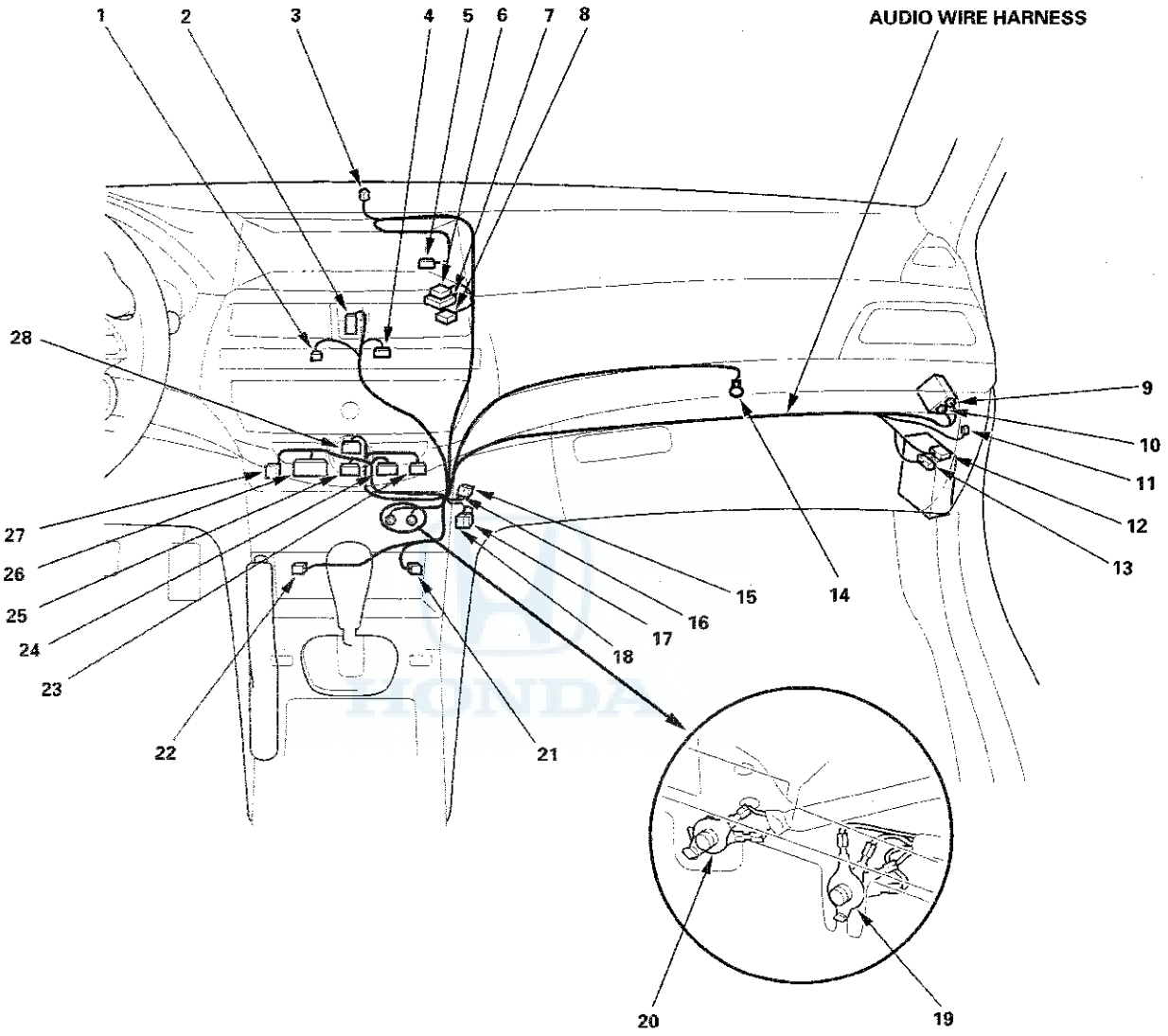
1
2
3
4
5
6
7
8
AUDIO WIRE HARNESS
28
9
10
11
12
13
27
26
25
24
23
15
14
16
17
18
22
21
20
19

Connector to Harness Index (cont'd)

Audio Wire Harness (Without Premium Audio System)

Connector or Terminal	Ref	Cavities	Location	Connects to	Notes
Antenna lead connector	6	3	Under right side of dash	AM/FM antenna amplifier	
Audio unit connector A	14	24	Under middle of dash		
Audio unit connector B	15	20	Under middle of dash		
Audio unit connector C	16	16	Under middle of dash		6 CD type
Audio unit connector F	13	3	Under middle of dash		
Audio-HVAC display unit	3	12	Middle of dash		
Glove box light	9	2	Glove box		
Hazard warning switch/Passenger's airbag cutoff indicator	1	6	Middle of dash		
HVAC control unit	2	24	Middle of dash		
Passenger's under-dash fuse/relay box connector D (see page 22-76)	8	28	Under right side of dash		
C401	4	24	Middle of dash	Dashboard wire harness (see page 22-36)	
C403	5	16	Middle of dash	Dashboard wire harness (see page 22-36)	6 CD type
C409	12	20	Under middle of dash	A/C wire harness (see page 22-72)	
C410	7	20	Under right side of dash	Right side wire harness 4-door (see page 22-46) 2-door (see page 22-48)	
G401	10		Under middle of dash	Body ground, via audio wire harness	
G402	11		Under middle of dash	Body ground, via audio wire harness	

HONDA

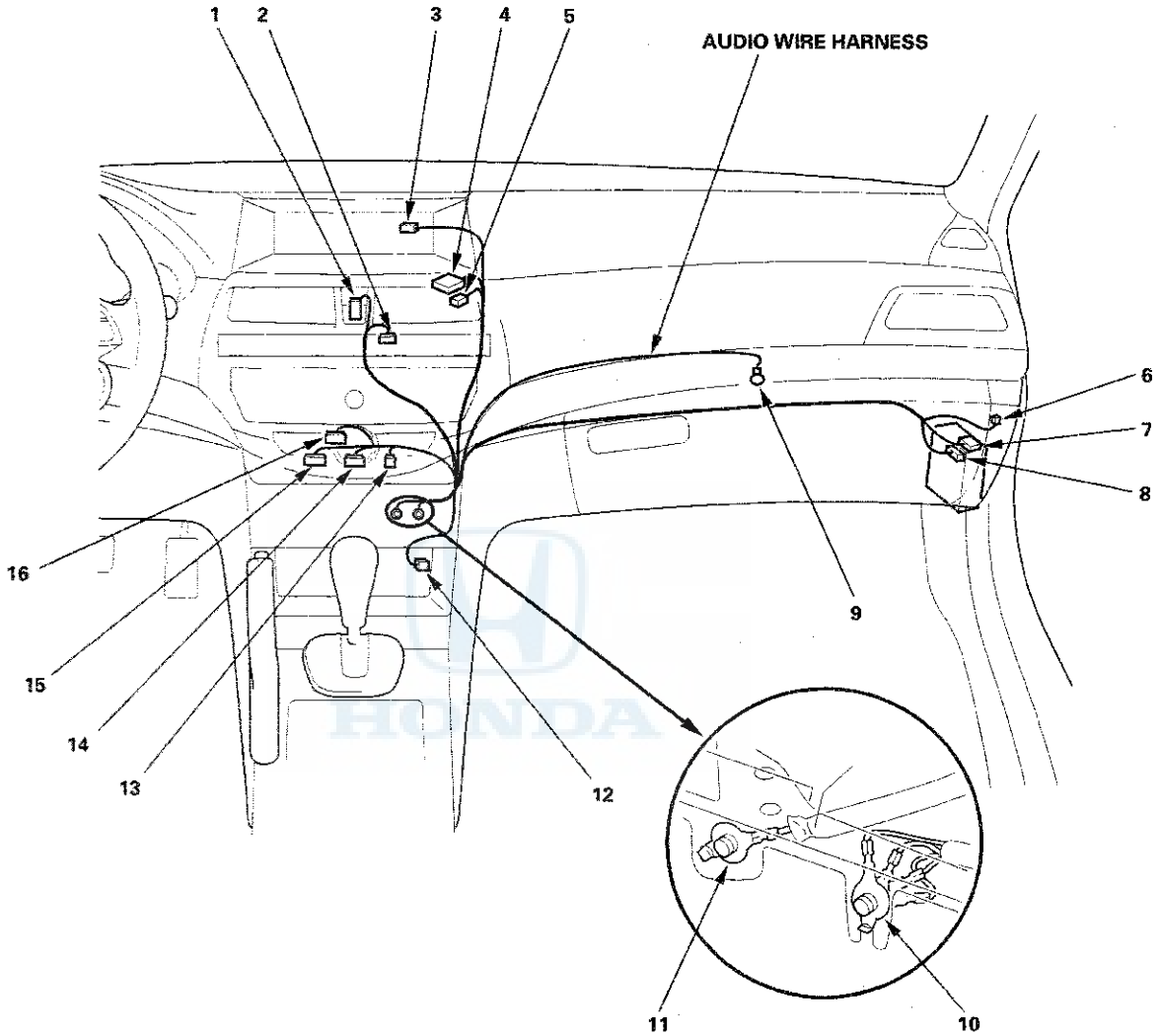
1
2
3
4
5
AUDIO WIRE HARNESS
6
7
8
9
10
11
12
13
14
15
16

Connector to Harness Index (cont'd)

Right Side Wire Harness (4-door)

Connector or Terminal	Ref	Cavities	Location	Connects to	Notes
Electrical compass unit	9	6	Under rear shelf		* 6
Front passenger's door switch	12	1	Right B-pillar		
Navigation service check connector	7	2	Under rear shelf		* 4
Navigation unit connector A	1	8	Under rear shelf		* 4
Navigation unit connector B	2	32	Under rear shelf		* 4
Navigation unit connector C	3	16	Under rear shelf		* 4
Navigation unit connector D	4	5	Under rear shelf		* 4
Passenger's under-dash fuse/relay box connector G (see page 22-76)	16	16	Under right side of dash		* 1
Passenger's under-dash fuse/relay box connector H (see page 22-76)	16	38	Under right side of dash		* 2
Right rear door switch	18	1	Right C-pillar		
Right rear speaker	8	2	Right side of rear shelf		
Right rear wheel speed sensor	20	2	Under right side of floor		
Subwoofer	5	2	Middle of rear shelf		* 3
XM receiver	21	14	Right side of trunk		
C410	14	20	Under right side of dash	Audio wire harness (see page 22-40)	* 4
				Audio wire harness (see page 22-42)	* 6
				Audio wire harness (see page 22-44)	* 5
C411	13	20	Under right side of dash	Audio wire harness (see page 22-40)	* 3, * 4
				Audio wire harness (see page 22-42)	* 3
				Audio wire harness (see page 22-44)	* 5
C651	15	16	Right kick panel	Dashboard wire harness (see page 22-36)	
C652 (junction connector)	19	12	Under rear shelf		* 4
C653	10	2	Right side of rear shelf	ANC rear microphone subharness	* 2
C781	11	13	Right B-pillar	Right rear door wire harness (see page 22-65)	
G651	17		Under front passenger's seat	Body ground, via right side wire harness	

* 1: LX, LX PZEV, LX-P, LX-P PZEV
* 2: Except LX, LX PZEV, LX-P, LX-P PZEV
* 3: With premium audio system
* 4: With navigation system
* 5: Without premium audio system
* 6: With premium audio system without navigation system

ANC Rear Microphone Subharness (4-door) (Except LX, LX PZEV, LX-P, LX-P PZEV)

Connector or Terminal	Ref	Cavities	Location	Connects to	Notes
Active noise cancellation rear microphone	6	3	Left side of rear shelf		
C653	10	2	Right side of rear shelf	Right side wire harness	

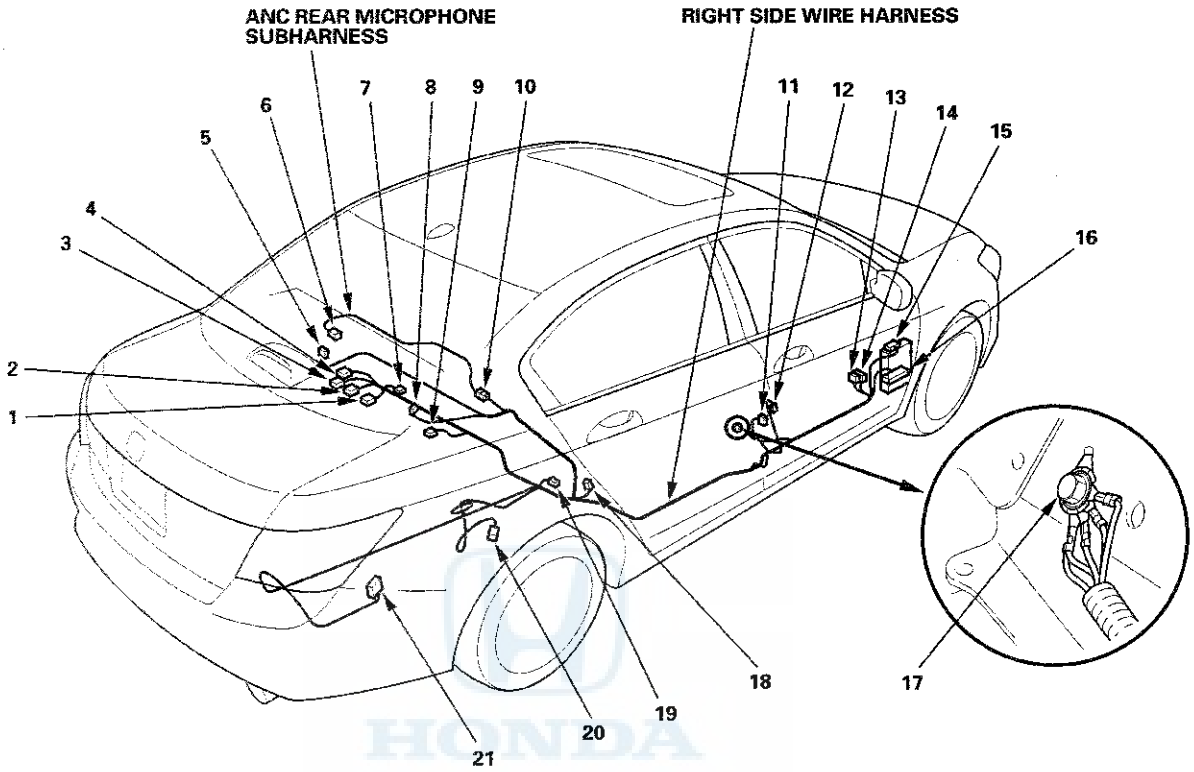
ANC REAR MICROPHONE SUBHARNESS
RIGHT SIDE WIRE HARNESS
1
2
3
4
5
6
7
8
9
10
11
12
13
14
15
16
17
18
19
20
21

Connector to Harness Index (cont'd)

Right Side Wire Harness (2-door)

Connector or Terminal	Ref	Cavities	Location	Connects to	Notes
Electrical compass unit	9	6	Under rear shelf		* 6
Navigation service check connector	7	2	Under rear shelf		* 4
Navigation unit connector A	1	8	Under rear shelf		* 4
Navigation unit connector B	2	32	Under rear shelf		* 4
Navigation unit connector C	3	16	Under rear shelf		* 4
Navigation unit connector D	4	5	Under rear shelf		* 4
Passenger's door switch	12	1	Right B-pillar		
Passenger's under-dash fuse/relay box connector G (see page 22-76)	16	16	Under right side of dash		* 1
Passenger's under-dash fuse/relay box connector H (see page 22-76)	16	38	Under right side of dash		* 2
Right rear speaker	8	2	Right side of rear shelf		
Right rear wheel speed sensor	18	2	Under right side of floor		
Subwoofer	5	2	Middle of rear shelf		* 3
XM receiver	19	14	Right side of trunk		
C410	14	20	Under right side of dash	Audio wire harness (see page 22-40)	* 4
				Audio wire harness (see page 22-42)	* 6
				2Audio wire harness (see page 22-44)	* 5
C411	13	20	Under right side of dash	Audio wire harness (see page 22-40)	* 3, * 4
				Audio wire harness (see page 22-42)	* 3
				Audio wire harness (see page 22-44)	* 5
C651	15	16	Right kick panel	Dashboard wire harness (see page 22-36)	
C652 (junction connector)	10	12	Under rear shelf		* 4
C653	11	2	Right side of rear shelf	ANC rear microphone subharness	* 2
G651	17		Under front passenger's seat	Body ground, via right side wire harness	

* 1: LX-S, LX-S PZEV
* 2: Except LX-S, LX-S PZEV
* 3: With premium audio system
* 4: With navigation system
* 5: Without premium audio system
* 6: With premium audio system without navigation system

ANC Rear Microphone Subharness (2-door) (Except LX-S, LX-S PZEV)

Connector or Terminal	Ref	Cavities	Location	Connects to	Notes
Active noise cancellation rear microphone	6	3	Left side of rear shelf		
C653	11	2	Right side of rear shelf	Right side wire harness	

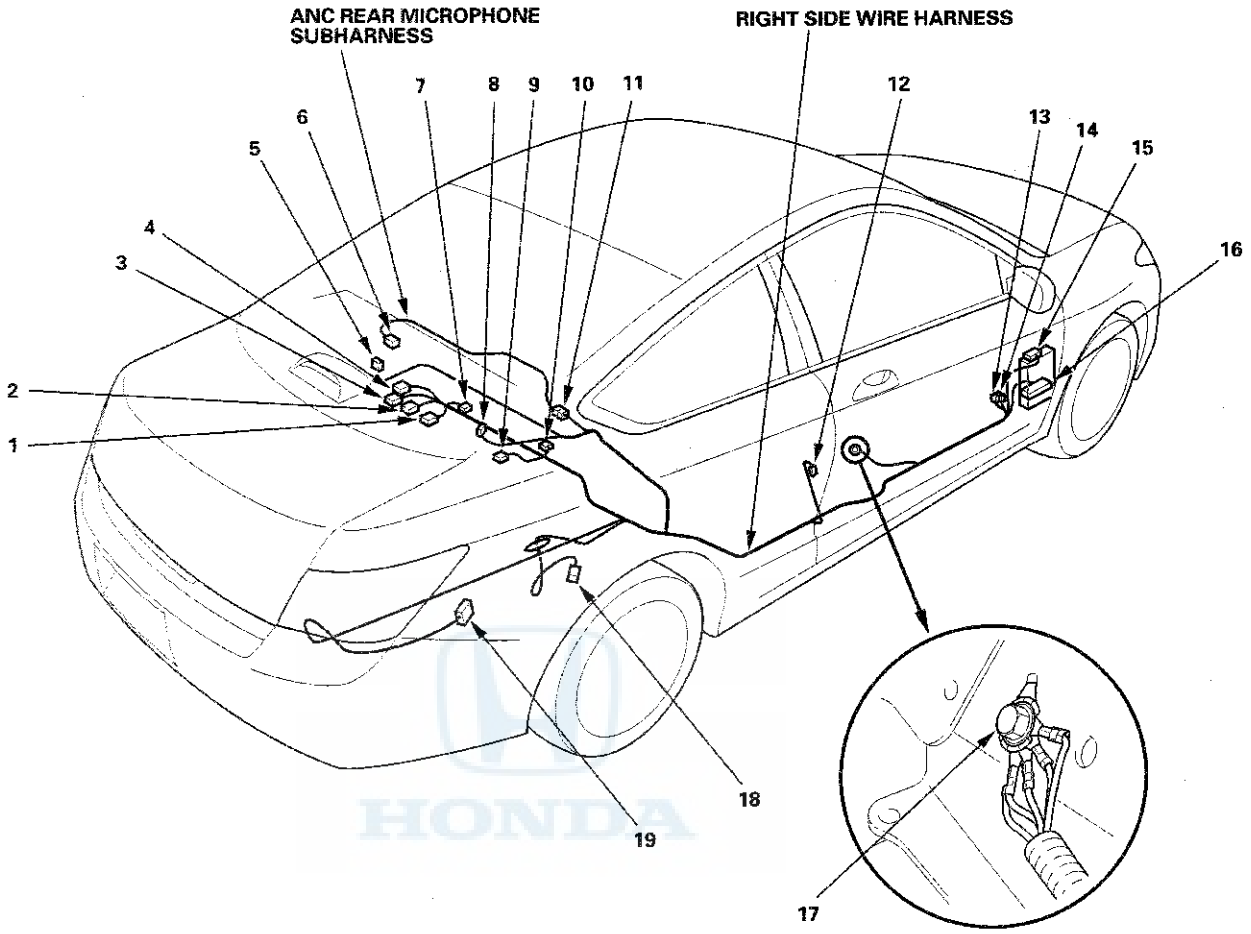
ANC REAR MICROPHONE SUBHARNESS
RIGHT SIDE WIRE HARNESS
1
2
3
4
5
6
7
8
9
10
11
12
13
14
15
16
17
18
19

Connector to Harness Index (cont'd)

Left Side Wire Harness (4-door)

Connector or Terminal	Ref	Cavities	Location	Connects to	Notes
Driver's door switch	5	1	Left B-pillar		
Driver's under-dash fuse/relay box connector D (see page 22-75)	4	16	Under left side of dash		
Driver's under-dash fuse/relay box connector E (see page 22-75)	3	20	Under left side of dash		
EVAP canister vent shut valve	26	2	Under floor (Fuel tank)		
Fuel tank pressure (FTP) sensor	27	3	Under floor (Fuel tank)		
Fuel tank unit	8	4	Under rear seat cushion		
High mount brake light	13	2	Middle of rear shelf		
Left back-up light	24	2	Left side of trunk		
Left license plate light	19	2	Trunk lid		
Left rear door switch	7	1	Left C-pillar		
Left rear speaker	10	2	Left side of rear shelf		
Left rear turn signal light	23	3	Left side of trunk		
Left rear wheel speed sensor	28	2	Under floor		
Left taillight/brake light	25	4	Left side of trunk		
Optional connector (for trailer)	21	2	Left rear side of trunk		
Rear window defogger connector A (+)	9	1	Middle of rear shelf		
Right back-up light	15	2	Right side of trunk		
Right license plate light	18	2	Trunk lid		
Right rear turn signal light	16	3	Right side of trunk		
Right taillight/brake light	17	4	Right side of trunk		
Trunk lid release actuator/trunk lid latch switch	20	3	Trunk lid		
Trunk light	14	2	Middle of rear shelf		
C304	1	8	Under left side of dash	Left engine compartment wire harness (see page 22-30)	
C601	2	28	Under left side of dash	Dashboard wire harness (see page 22-32)	* 1
C601	2	12	Under left side of dash	Dashboard wire harness (see page 22-32)	* 2
C771	6	13	Left B-pillar	Left rear door wire harness (see page 22-64)	
G601	30		Left side of floor	Body ground, via left side wire harness	
G602	22		Left rear side of trunk	Body ground, via left side wire harness	
G603	29		Rear of floor	Body ground, via left side wire harness	

* 1: Except LX, LX PZEV, LX-P, LX-P PZEV
* 2: LX, LX PZEV, LX-P LX-P PZEV

Rear Window Defogger Ground Wire (4-door)

Connector or Terminal	Ref	Cavities	Location	Connects to	Notes
Rear window defogger connector B (−)	11	1	Right C-pillar		
G801	12		Right C-pillar	Body ground, via rear window defogger ground wire	

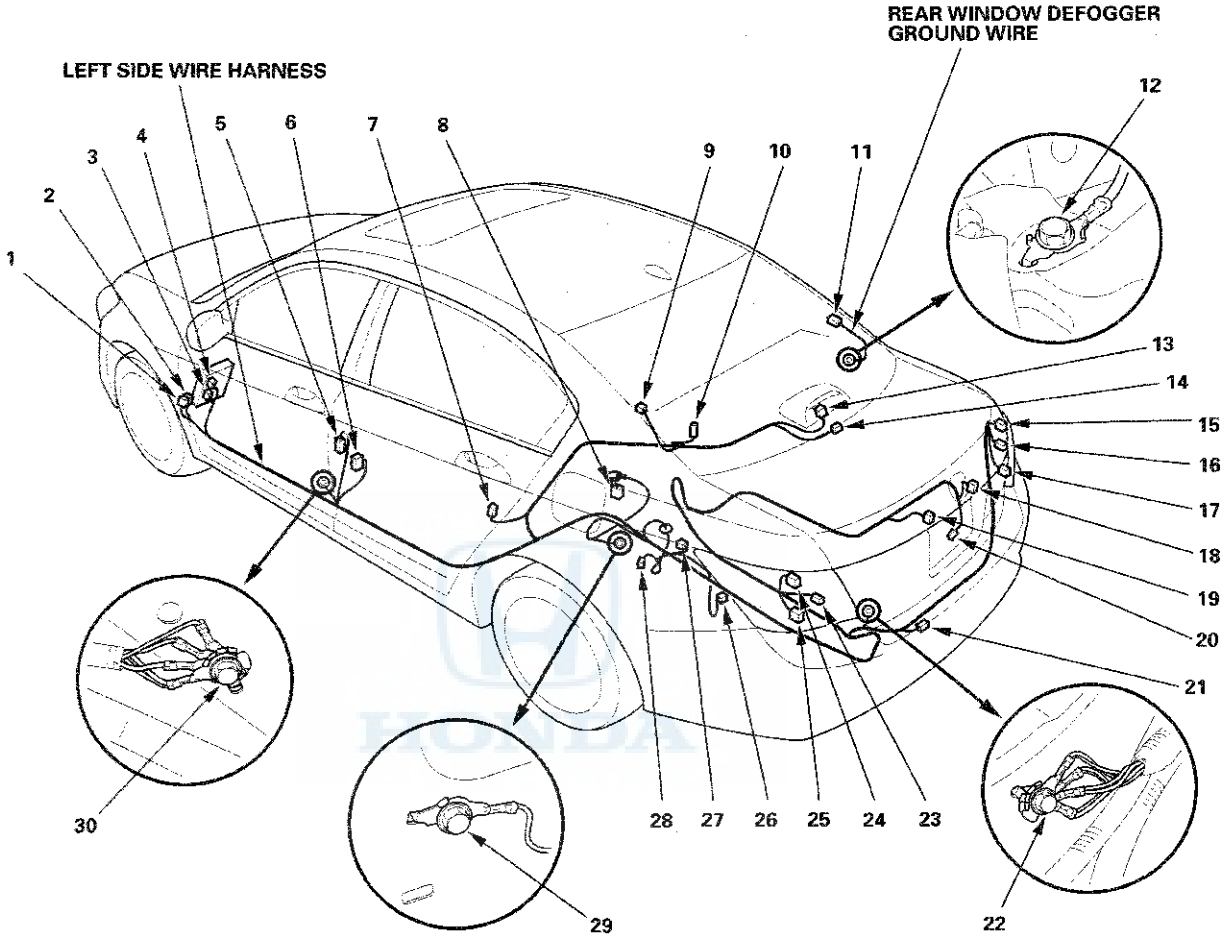
REAR WINDOW DEFOGGER GROUND WIRE
LEFT SIDE WIRE HARNESS
1
2
3
4
5
6
7
8
9
10
11
12
13
14
15
16
17
18
19
20
21
22
23
24
25
26
27
28
29
30

Connector to Harness Index (cont'd)

Left Side Wire Harness (2-door)

Connector or Terminal	Ref	Cavities	Location	Connects to	Notes
Driver's door switch	4	1	Left B-pillar		
Driver's under-dash fuse/relay box connector D (see page 22-75)	3	16	Under left side of dash		
EVAP canister vent shut valve	22	2	Under floor (fuel tank)		
Fuel tank pressure (FTP) sensor	23	3	Under floor (fuel tank)		
Fuel tank unit	5	4	Under rear seat cushion		
High mount brake light	8	2	Middle of rear shelf		
Left back-up light	21	2	Left side of trunk		
Left rear speaker	7	2	Left side of rear shelf		
Left rear turn signal light	19	3	Left side of trunk		
Left rear wheel speed sensor	24	2	Under floor		
Left taillight/brake light	20	4	Left side of trunk		
License plate light	16	2	Middle of rear bumper		
Optional connector (for trailer)	18	2	Left side of trunk		
Rear window defogger connector A (+)	6	1	Middle of rear shelf		
Right back-up light	12	2	Right side of trunk		
Right rear turn signal light	13	3	Right side of trunk		
Right taillight/brake light	14	4	Right side of trunk		
Trunk lid release actuator/trunk lid latch switch	15	3	Trunk lid		
Trunk light	9	2	Middle of rear shelf		
C304	1	8	Under left side of dash	Left engine compartment wire harness (see page 22-30)	
C601	2	28	Under left side of dash	Dashboard wire harness (see page 22-32)	
G601	26		Left side of floor	Body ground, via left side wire harness	
G602	17		Left side of trunk	Body ground, via left side wire harness	
G603	25		Rear of floor	Body ground, via left side wire harness	

Rear Window Defogger Ground Wire (2-door)

Connector or Terminal	Ref	Cavities	Location	Connects to	Notes
Rear window defogger connector B (−)	10	1	Right C-pillar		
G801	11		Right C-pillar	Body ground, via rear window defogger ground wire	

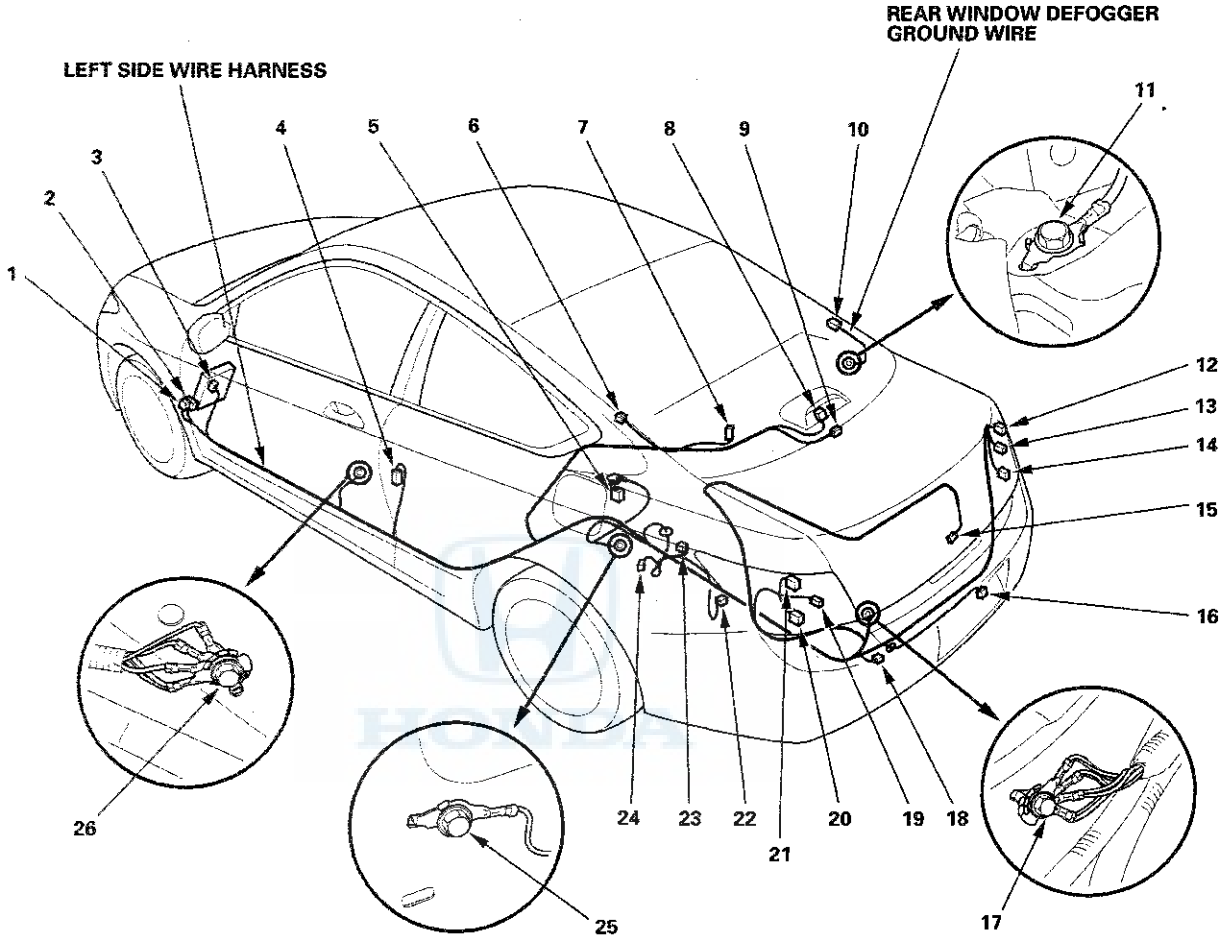
REAR WINDOW DEFOGGER GROUND WIRE
LEFT SIDE WIRE HARNESS
1
2
3
4
5
6
7
8
9
10
11
12
13
14
15
16
17
18
19
20
21
22
23
24
25
26

Connector to Harness Index (cont'd)

SRS Floor Wire Harness (4-door)

Connector or Terminal	Ref	Cavities	Location	Connects to	Notes
Driver's seat belt buckle switch	2	2	Under driver's seat		
Driver's seat belt tensioner	17	4	Left B-pillar		
Driver's side airbag inflator	19	2	Under driver's seat		
Front passenger's seat belt buckle switch	5	2	Under front passenger's seat		
Front passenger's seat belt tensioner	9	4	Right B-pillar		
Front passenger's side airbag inflator	7	2	Under front passenger's seat		
Left side curtain airbag inflator	14	2	Left C-pillar		
Left side impact sensor (first)	16	2	Left B-pillar		
Left side impact sensor (second)	15	2	Left C-pillar		
Right side curtain airbag inflator	11	2	Right C-pillar		
Right side impact sensor (first)	10	2	Right B-pillar		
Right side impact sensor (second)	12	2	Right C-pillar		
Roll rate sensor	13	2	Under rear seat cushion		
SRS unit	3	39	Under middle of dash		
C701	4	18	Under center console	Dashboard wire harness (see page 22-36)	* 1
C701	4	2	Under center console	Dashboard wire harness (see page 22-36)	* 2
C702	1	18	Under driver's seat	Driver's seat wire harness (see page 22-66)	* 1
C702	1	2	Under driver's seat	Driver's seat position sensor harness (see page 22-67)	* 2
C703	6	18	Under front passenger's seat	Front passenger's seat wire harness (see page 22-68)	* 3
C703	6	4	Under front passenger's seat	Front passenger's seat wire harness (see page 22-68)	* 4
G701	18		Under driver's seat	Body ground, via SRS floor wire harness	
G702	8		Under front passenger's seat	Body ground, via SRS floor wire harness	

* 1: With power seat
* 2: Without power seat
* 3: With seat heater
* 4: Without seat heater

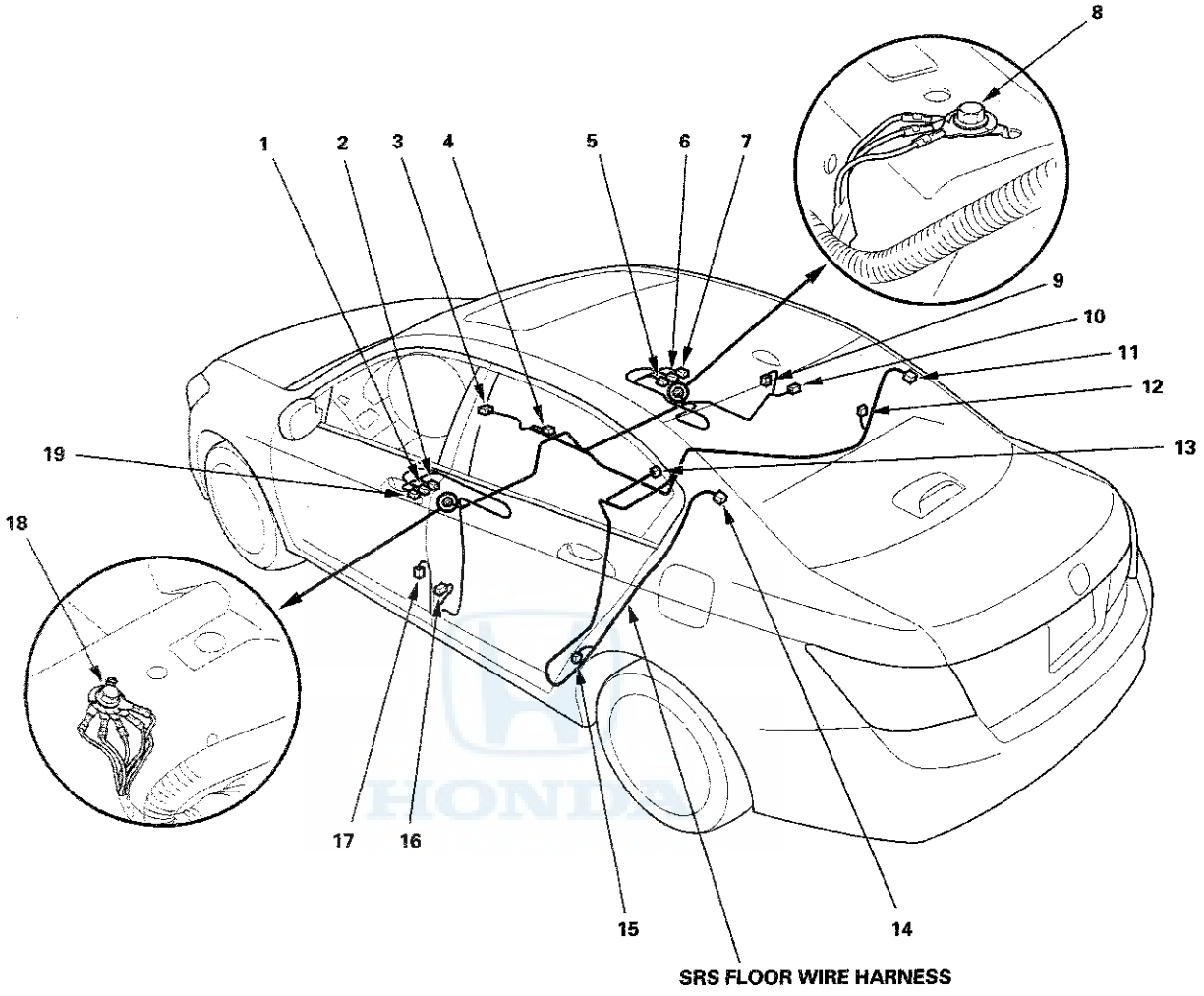
1
2
3
4
5
6
7
8
9
10
11
12
13
14
15
16
17
18
19
SRS FLOOR WIRE HARNESS

Connector to Harness Index (cont'd)

SRS Floor Wire Harness (2-door)

Connector or Terminal	Ref	Cavities	Location	Connects to	Notes
Driver's seat belt buckle switch	2	2	Under driver's seat		
Driver's seat belt tensioner	17	4	Left B-pillar		
Driver's side airbag inflator	19	2	Under driver's seat		
Front passenger's seat belt buckle switch	5	2	Under front passenger's seat		
Front passenger's seat belt tensioner	9	4	Right B-pillar		
Front passenger's side airbag inflator	7	2	Under front passenger's seat		
Left side curtain airbag inflator	14	2	Left C-pillar		
Left side impact sensor (first)	16	2	Left B-pillar		
Left side impact sensor (second)	15	2	Left C-pillar		
Right side curtain airbag inflator	11	2	Right C-pillar		
Right side impact sensor (first)	10	2	Right B-pillar		
Right side impact sensor (second)	12	2	Right C-pillar		
Roll rate sensor	13	2	Under rear seat cushion		
SRS unit	3	39	Under middle of dash		
C701	4	18	Under center console	Dashboard wire harness (see page 22-36)	* 1
C701	4	2	Under center console	Dashboard wire harness (see page 22-36)	* 2
C702	1	18	Under driver's seat	Driver's seat wire harness (see page 22-66)	* 1
C702	1	2	Under driver's seat	Driver's seat position sensor harness (see page 22-67)	* 2
C703	6	18	Under front passenger's seat	Front passenger's seat wire harness (see page 22-69)	* 3
C703	6	4	Under front passenger's seat	Front passenger's seat wire harness (see page 22-69)	* 4
G701	18		Under driver's seat	Body ground, via SRS floor wire harness	
G702	8		Under front passenger's seat	Body ground, via SRS floor wire harness	

* 1: With power seat
* 2: Without power seat
* 3: With seat heater
* 4: Without seat heater

HONDA

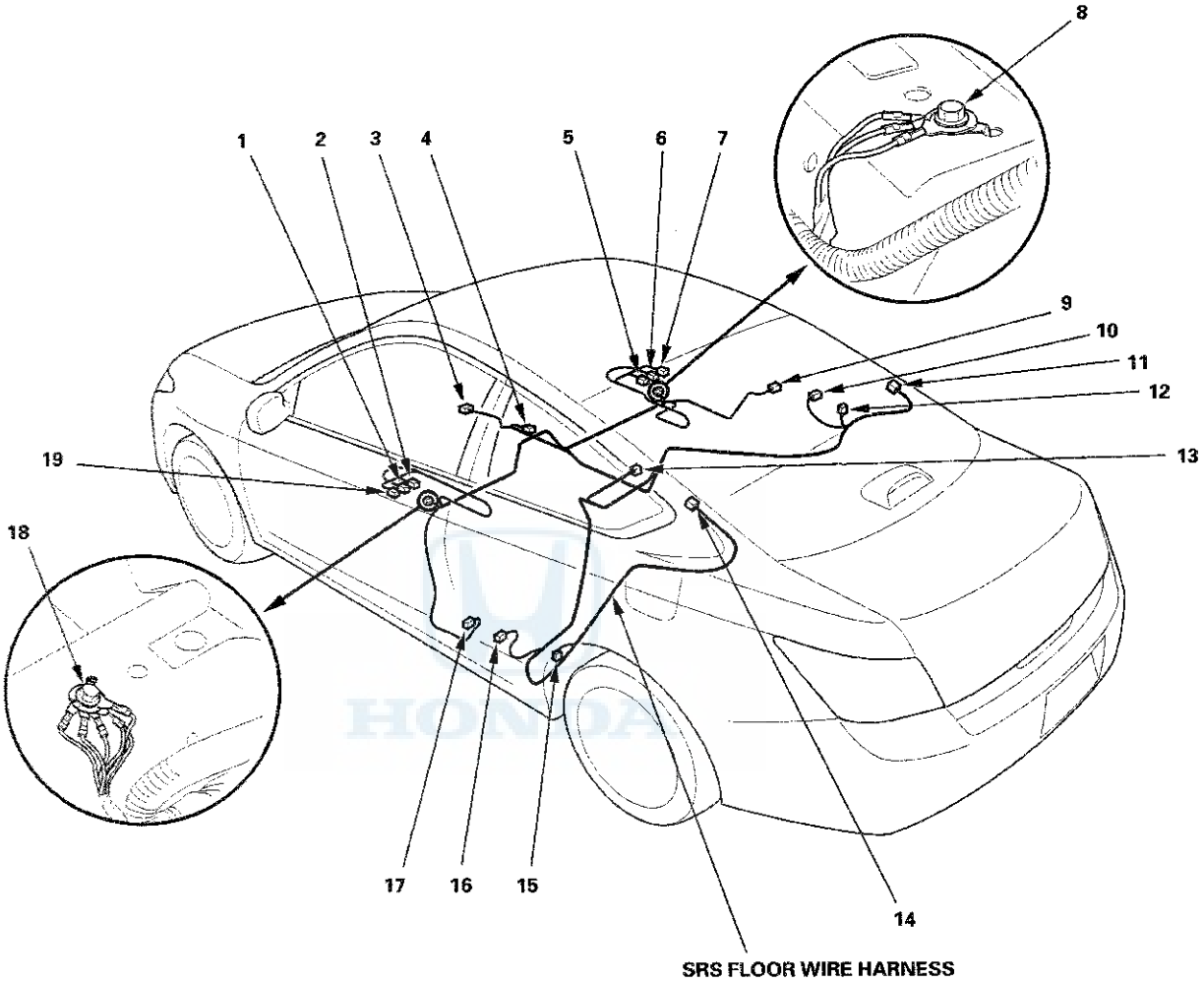
1
2
3
4
5
6
7
8
9
10
11
12
13
14
15
16
17
18
19
SRS FLOOR WIRE HARNESS

Connector to Harness Index (cont'd)

Roof Wire Harness (With moonroof)

Connector or Terminal	Ref	Cavities	Location	Connects to	Notes
Automatic dimming inside mirror	2	7	Middle of roof		
Front individual map light	4	3	Middle of roof		
Left vanity mirror light	7	2	Left front of roof		
HandsFreeLink/navigation microphone	3	7	Middle of roof		*
Moonroof switch	5	12	Middle of roof		
Optional connector (for automatic dimming inside mirror)	10	4	Middle of roof		
Right vanity mirror light	1	2	Right front of roof		
C501	11	20	Under left side of dash	Dashboard wire harness (see page 22-32)	
C502	12	4	Under left side of dash	Dashboard wire harness (see page 22-32)	
C551	6	13	Middle of roof	Moonroof subharness	

*: With navigation or HandsFreeLink

Moonroof Subharness

Connector or Terminal	Ref	Cavities	Location	Connects to	Notes
Ceiling light	8	3	Roof		
Moonroof control unit/motor	9	14	Roof		
C551	6	13	Middle of roof	Roof wire harness	

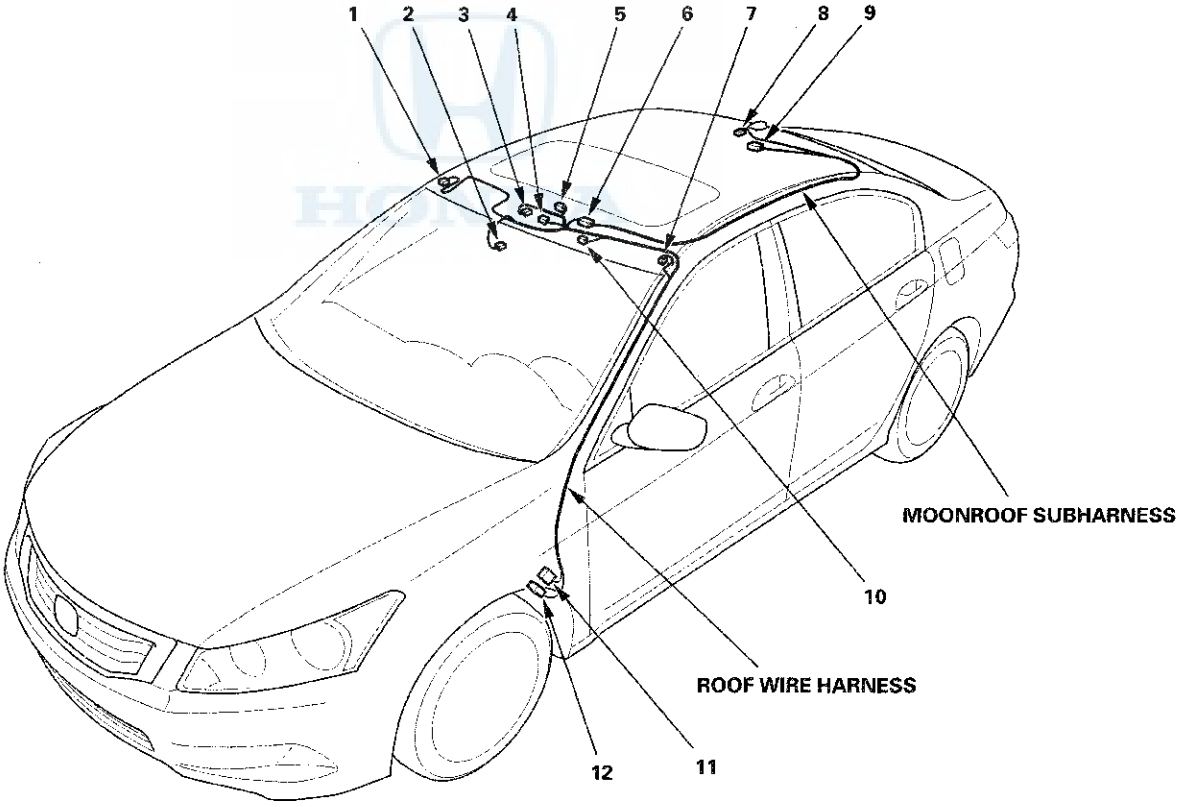

Roof Wire Harness (Without moonroof)

Connector or Terminal	Ref	Cavities	Location	Connects to	Notes
Ceiling light	3	3	Middle of roof		
Front individual map light	2	3	Middle of roof		
Left vanity mirror light	4	2	Middle of roof		
Right vanity mirror light	1	2	Middle of roof		
C501	5	4	Under left side of dash	Dashboard wire harness (see page 22-32)	

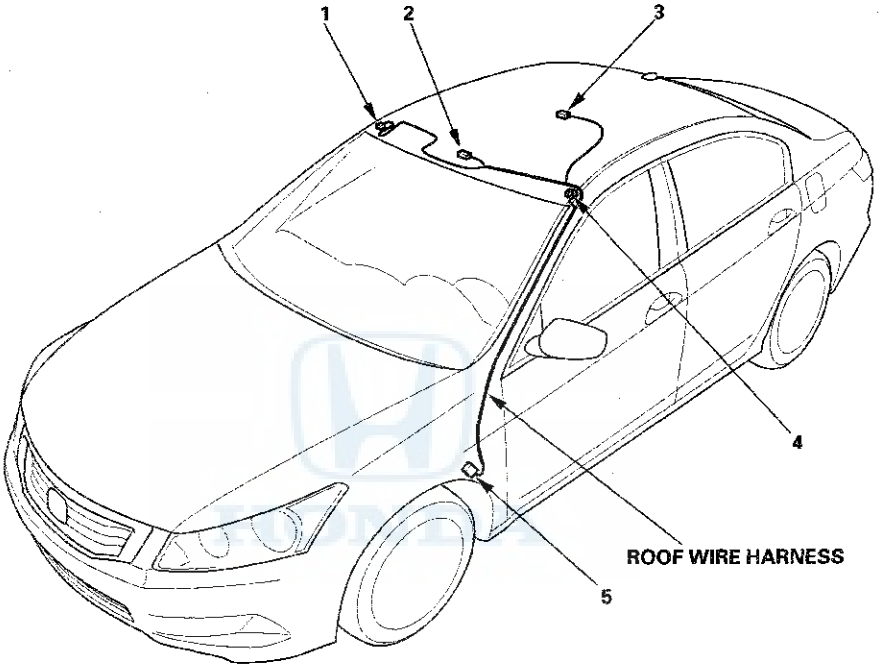

Connector to Harness Index (cont'd)

Driver's Door Wire Harness (4-door)

Connector or Terminal	Ref	Cavities	Location	Connects to	Notes
Driver's door courtesy light	8	2	Driver's door		
Driver's door lock actuator/knob switch/key cylinder switch	9	10	Driver's door		
Driver's power window motor	7	6	Driver's door		
Left front speaker	6	2	Driver's door		
Left front tweeter	3	2	Driver's door		
Left power mirror	4	8	Driver's door		
Power mirror switch	2	13	Driver's door		
Power window master switch (door multiplex control unit)	1	37	Driver's door		
C751	5	20	Under left side of dash	Dashboard wire harness (see page 22-32)	

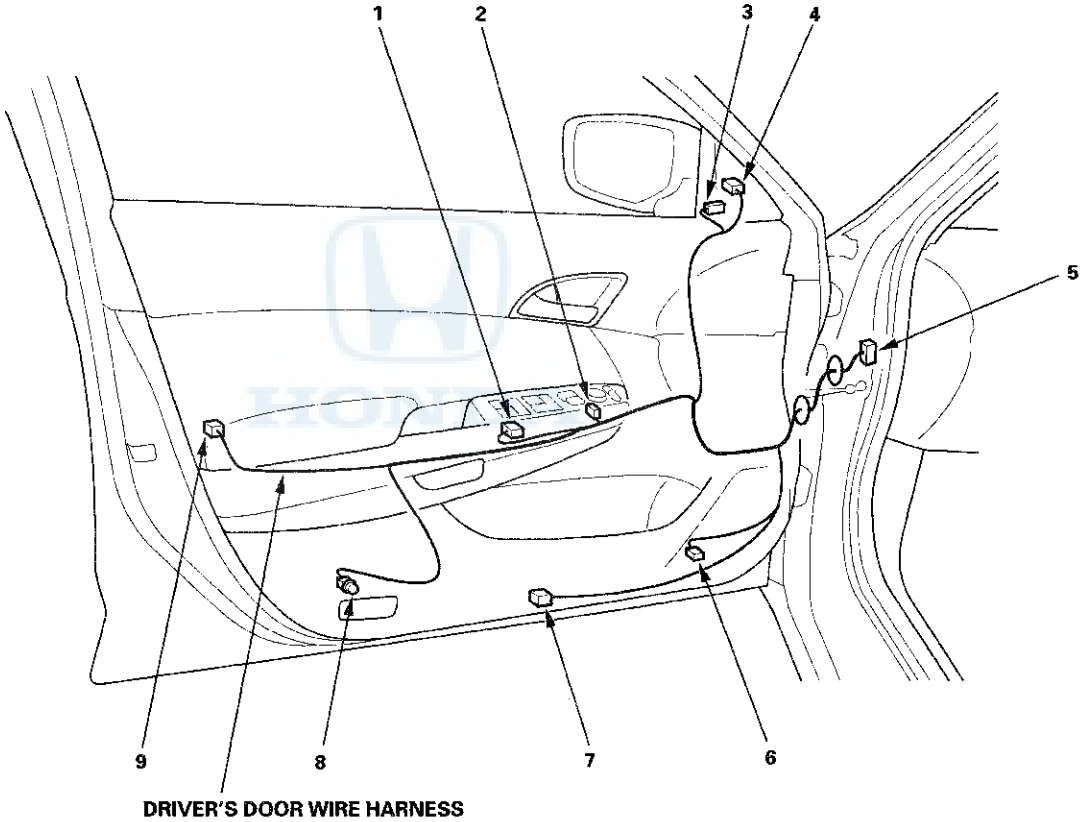

Driver's Door Wire Harness (2-door)

Connector or Terminal	Ref	Cavities	Location	Connects to	Notes
Driver's door lock actuator/knob switch/key cylinder switch	8	10	Driver's door		
Driver's power window motor	7	6	Driver's door		
Left front speaker	6	2	Driver's door		
Left front tweeter	3	2	Driver's door		
Left power mirror	4	8	Driver's door		
Power mirror switch	2	13	Driver's door		
Power window master switch (door multiplex control unit)	1	37	Driver's door		
C751	5	20	Under left side of dash	Dashboard wire harness (see page 22-32)	

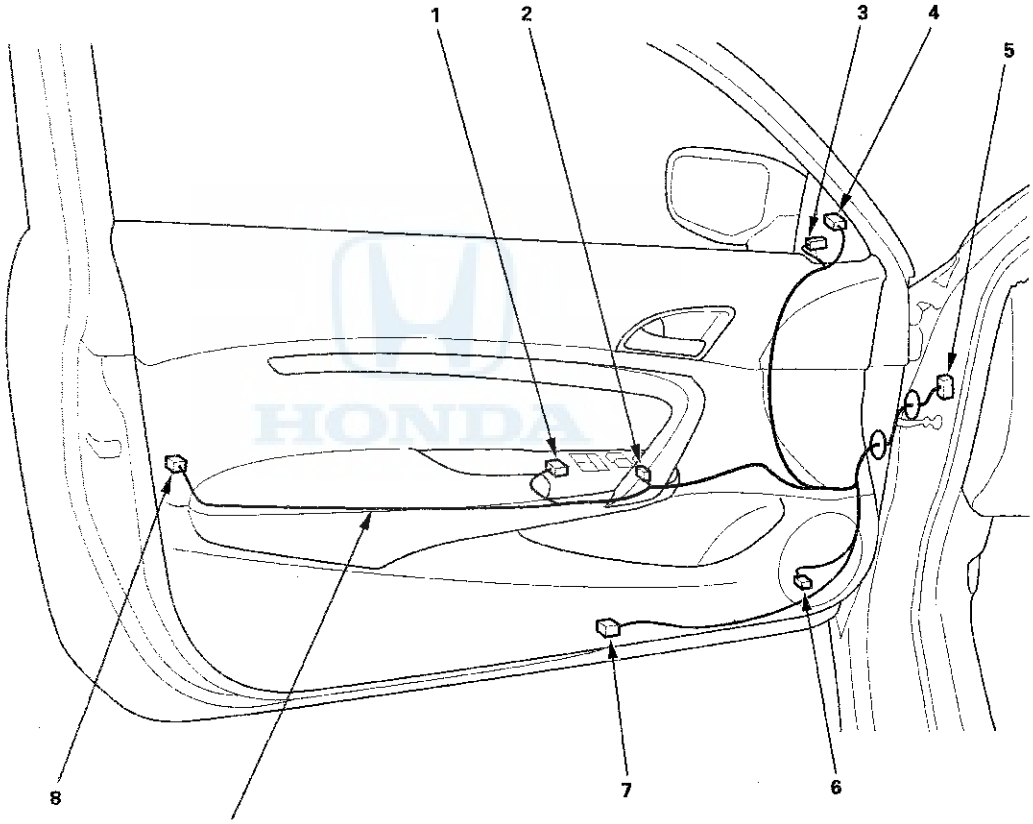

DRIVER'S DOOR WIRE HARNESS

Connector to Harness Index (cont'd)

Front Passenger's Door Wire Harness (4-door)

Connector or Terminal	Ref	Cavities	Location	Connects to	Notes
Front passenger's door courtesy light	6	2	Front passenger's door		
Front passenger's door lock actuator/ knob switch	5	10	Front passenger's door		* 1
Front passenger's door lock actuator	5	10	Front passenger's door		* 2
Front passenger's power window motor	7	6	Front passenger's door		* 3
Front passenger's power window motor	7	2	Front passenger's door		* 4
Front passenger's power window switch	4	37	Front passenger's door		
Right front speaker	8	2	Front passenger's door		
Right front tweeter	3	2	Front passenger's door		
Right power mirror	2	8	Front passenger's door		
C761	1	13	Under left side of dash	Dashboard wire harness (see page 22-36)	

* 1: With security
* 2: Without security
* 3: With AUTO UP/AUTO DOWN function
* 4: Without AUTO UP/AUTO DOWN function

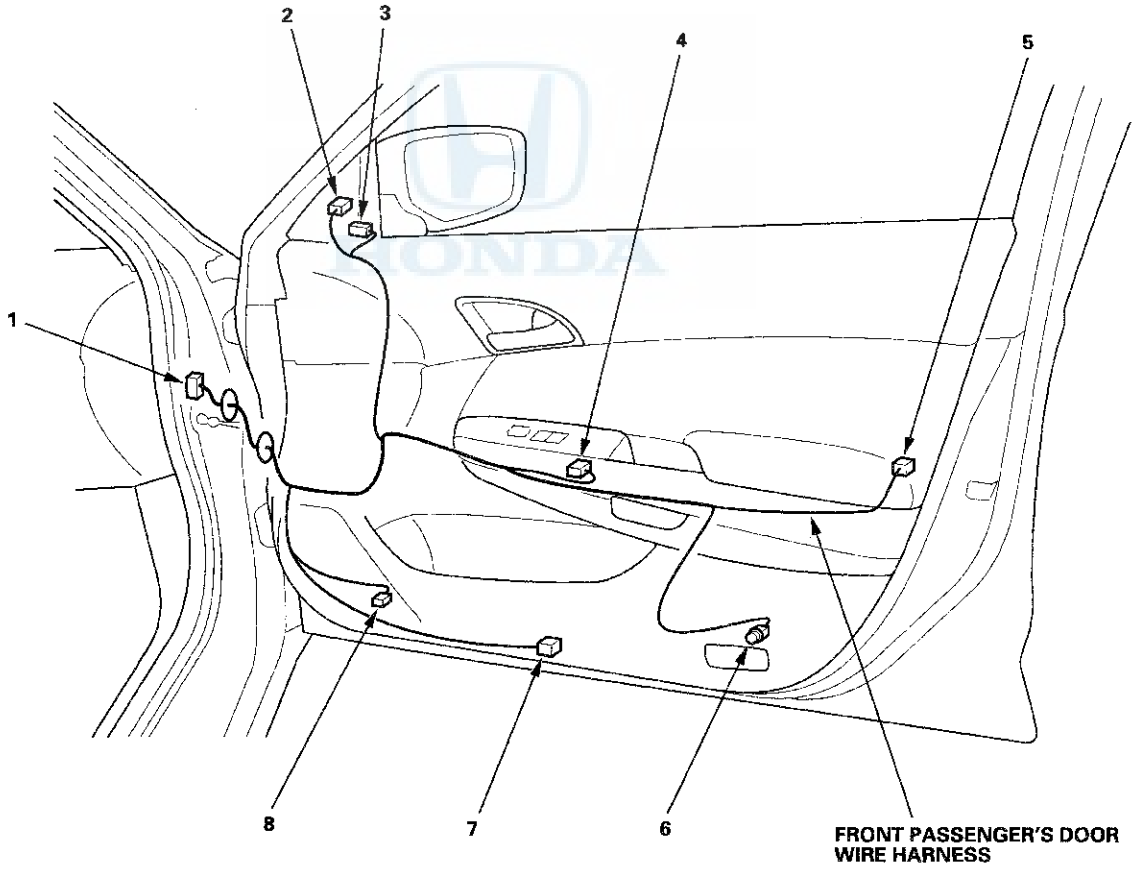

Passenger's Door Wire Harness (2-door)

Connector or Terminal	Ref	Cavities	Location	Connects to	Notes
Passenger's door lock actuator/knob switch	5	10	Passenger's door		
Passenger's power window motor	6	6	Passenger's door		* 1
Passenger's power window motor	6	2	Passenger's door		* 2
Passenger's power window switch	4	37	Passenger's door		
Right front speaker	7	2	Passenger's door		
Right front tweeter	3	2	Passenger's door		
Right power mirror	2	8	Passenger's door		
C761	1	13	Under left side of dash	Dashboard wire harness (see page 22-36)	

* 1: With AUTO UP/AUTO DOWN function
* 2: Without AUTO UP/AUTO DOWN function

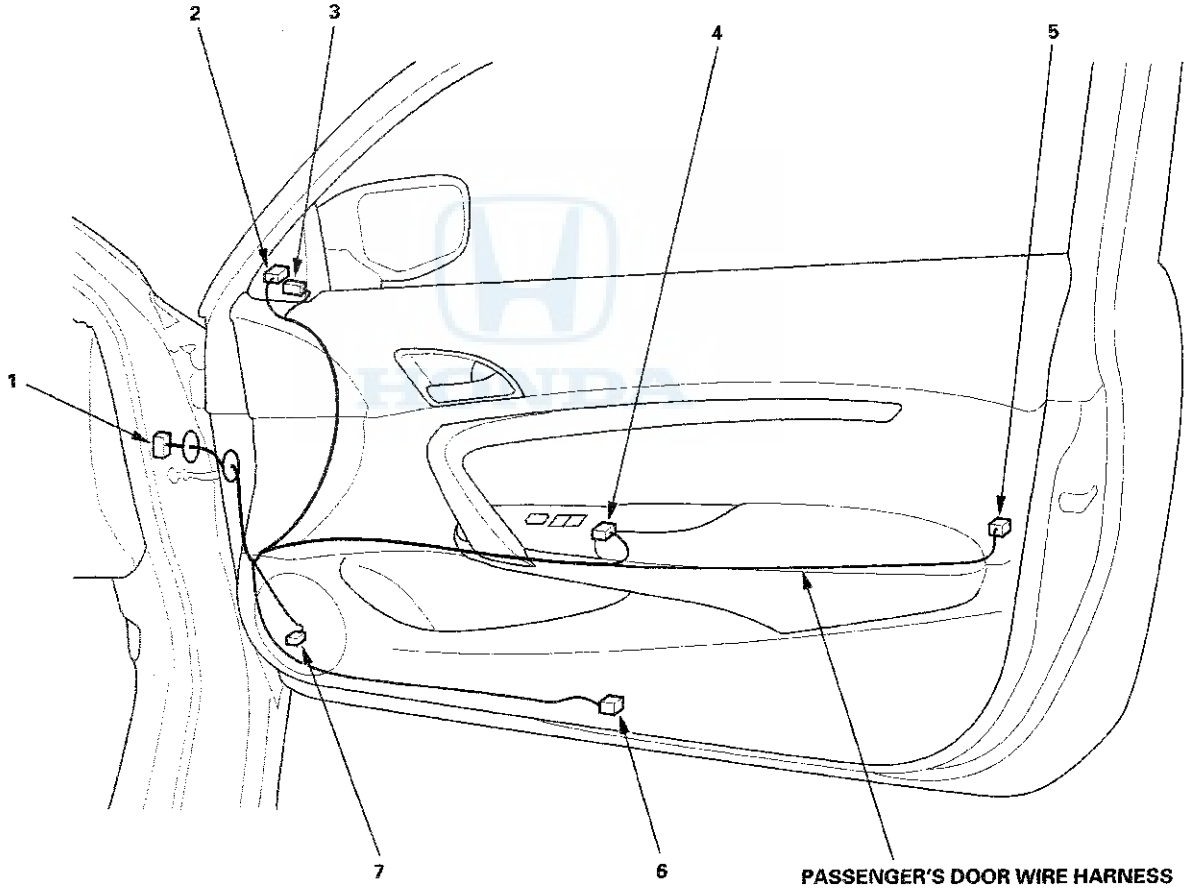

Connector to Harness Index (cont'd)

Left Rear Door Wire Harness (4-door)

Connector or Terminal	Ref	Cavities	Location	Connects to	Notes
Left rear door lock actuator/knob switch	1	10	Left rear door		* 1
Left rear door lock actuator	1	10	Left rear door		* 2
Left rear power window motor	4	2	Left rear door		
Left rear power window switch	2	14	Left rear door		
C771	3	13	Left B-pillar	Left side wire harness (see page 22-50)	

* 1: With security
* 2: Without security

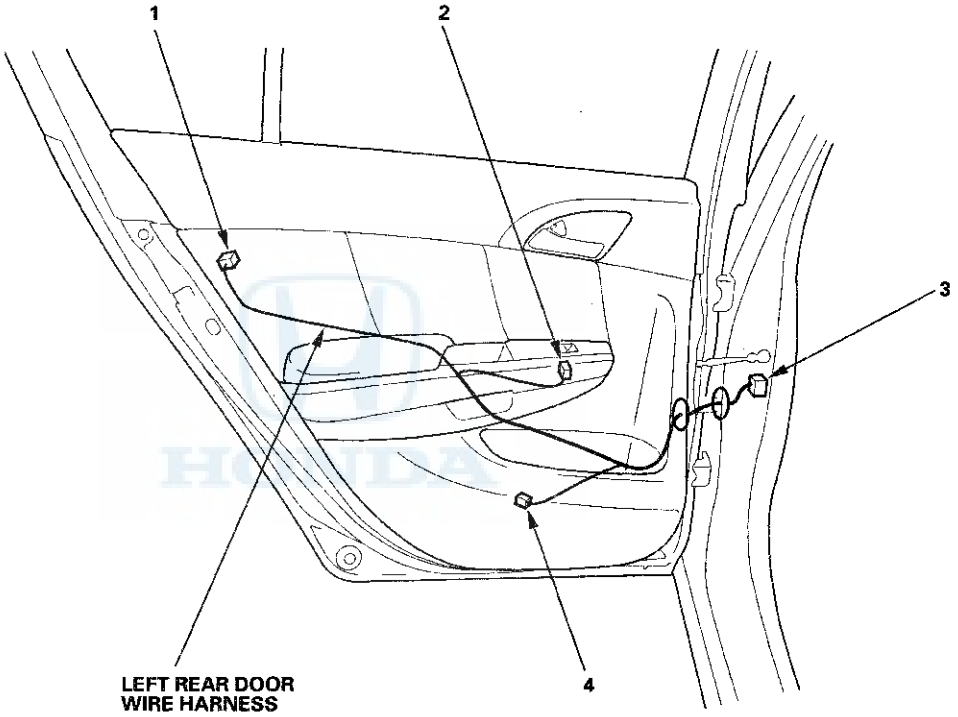

Right Rear Door Wire Harness (4-door)

Connector or Terminal	Ref	Cavities	Location	Connects to	Notes
Right rear door lock actuator/knob switch	3	10	Right rear door		* 1
Right rear door lock actuator	3	10	Right rear door		* 2
Right rear power window motor	4	2	Right rear door		
Right rear power window switch	2	14	Right rear door		
C781	1	13	Right B-pillar	Right side wire harness (see page 22-46)	

* 1: With security
* 2: Without security

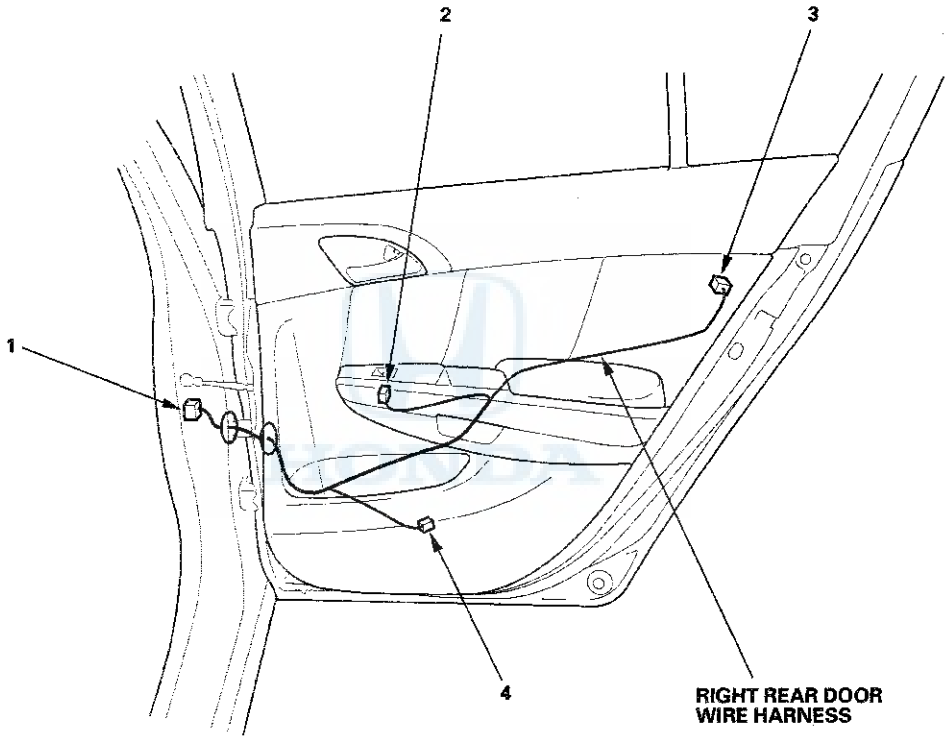

Connector to Harness Index (cont'd)

Driver's Seat Wire Harness (With power seat)

Connector or Terminal	Ref	Cavities	Location	Connects to	Notes
Driver's power lumbar support switch	3	5	Left side of driver's seat		* 1
Driver's power lumbar support motor	13	2	Right side of seat-back		* 1
Driver's power seat adjustment switch	4	12	Left side of driver's seat		
Driver's seat-back heater	12	2	Driver's seat		* 2
Driver's seat cushion heater	9	4	Driver's seat		* 2
Driver's seat heater relay (high)	8	4	Driver's seat		* 2
Driver's seat heater relay (low)	7	5	Driver's seat		* 2
Driver's seat front up-down motor	10	2	Driver's seat		
Driver's seat position sensor	11	2	Driver's seat		
Driver's seat rear up-down motor	2	2	Driver's seat		
Driver's seat recline motor	1	2	Bottom of seat back		
Driver's seat slide motor	5	2	Driver's seat		
C702	6	18	Under driver's seat	SRS floor wire harness 4-door (see page 22-54) 2-door (see page 22-56)	

* 1: With power lumbar support
* 2: With seat heater

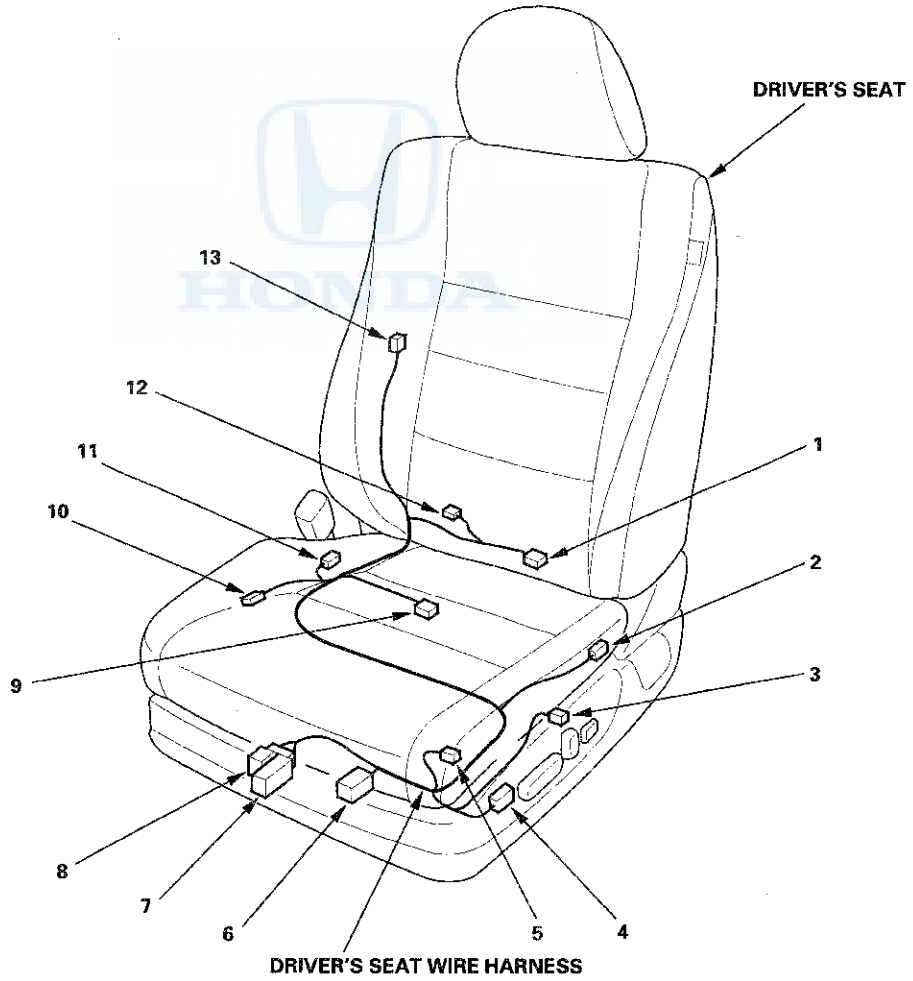

Driver's Seat Position Sensor Harness (Without power seat)

Connector or Terminal	Ref	Cavities	Location	Connects to	Notes
Driver's seat position sensor	1	2	Driver's seat		
C702	2	2	Under driver's seat	SRS floor wire harness 4-door (see page 22-54) 2-door (see page 22-56)	

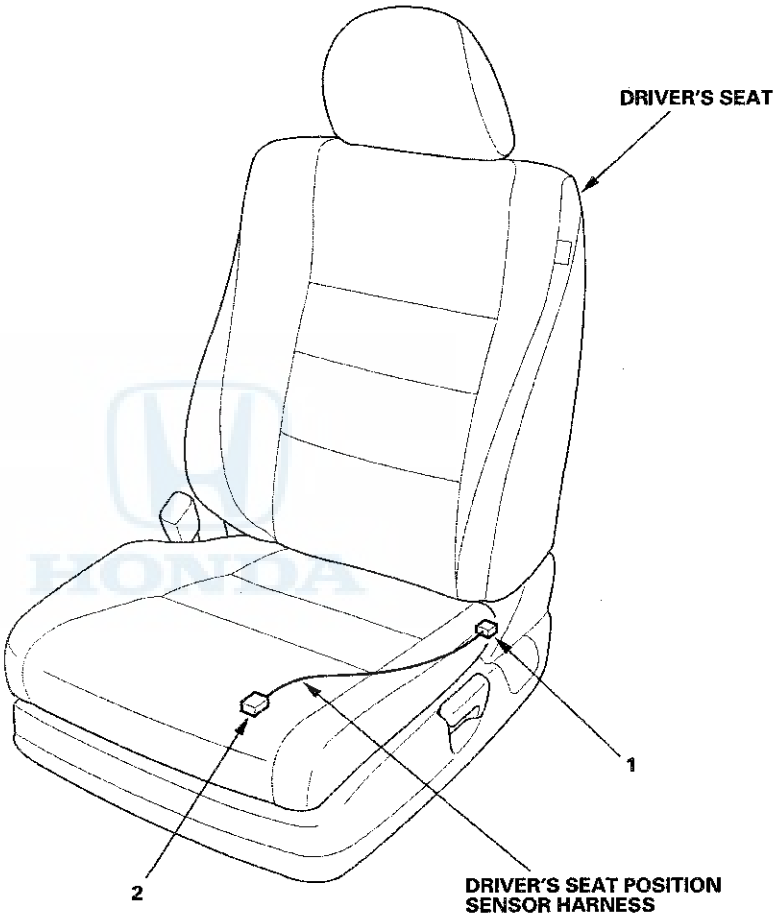

Connector to Harness Index (cont'd)

Front Passenger's Seat Wire Harness (4-door)

Connector or Terminal	Ref	Cavities	Location	Connects to	Notes
Front passenger's seat cushion heater	2	3	Front passenger's seat		* 1
Front passenger's seat heater relay (high)	4	4	Front passenger's seat		* 1
Front passenger's seat heater relay (low)	6	5	Front passenger's seat		* 1
Front passenger's weight sensor (front inner side)	5	3	Front passenger's seat		
Front passenger's weight sensor (front outer side)	8	3	Front passenger's seat		
Front passenger's weight sensor (rear inner side)	3	3	Front passenger's seat		
Front passenger's weight sensor (rear outer side)	9	3	Front passenger's seat		
ODS unit	1	18	Front passenger's seat		
C703	7	18	Under front passenger's seat	SRS floor wire harness (see page 22-54)	* 1
C703	7	4	Under front passenger's seat	SRS floor wire harness (see page 22-54)	* 2

* 1: With seat heater
* 2: Without seat heater

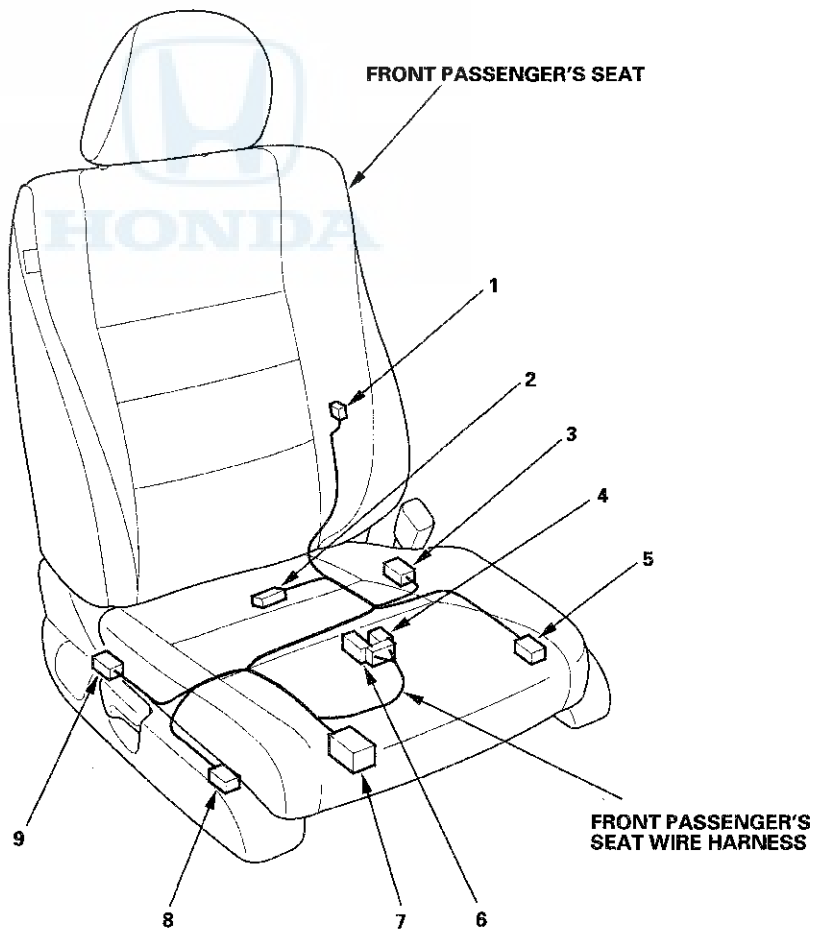

Front Passenger's Seat Wire Harness (2-door)

Connector or Terminal	Ref	Cavities	Location	Connects to	Notes
Front passenger's seat cushion heater	6	3	Front passenger's seat		* 1
Front passenger's seat heater relay (high)	3	4	Front passenger's seat		* 1
Front passenger's seat heater relay (low)	4	5	Front passenger's seat		* 1
Front passenger's weight sensor (inner side)	2	2	Front passenger's seat		
Front passenger's weight sensor (outer side)	7	3	Front passenger's seat		
ODS unit	1	18	Front passenger's seat		
C703	5	18	Under front passenger's seat	SRS floor wire harness (see page 22-56)	* 1
C703	5	4	Under front passenger's seat	SRS floor wire harness (see page 22-56)	* 2

* 1: With seat heater
* 2: Without seat heater

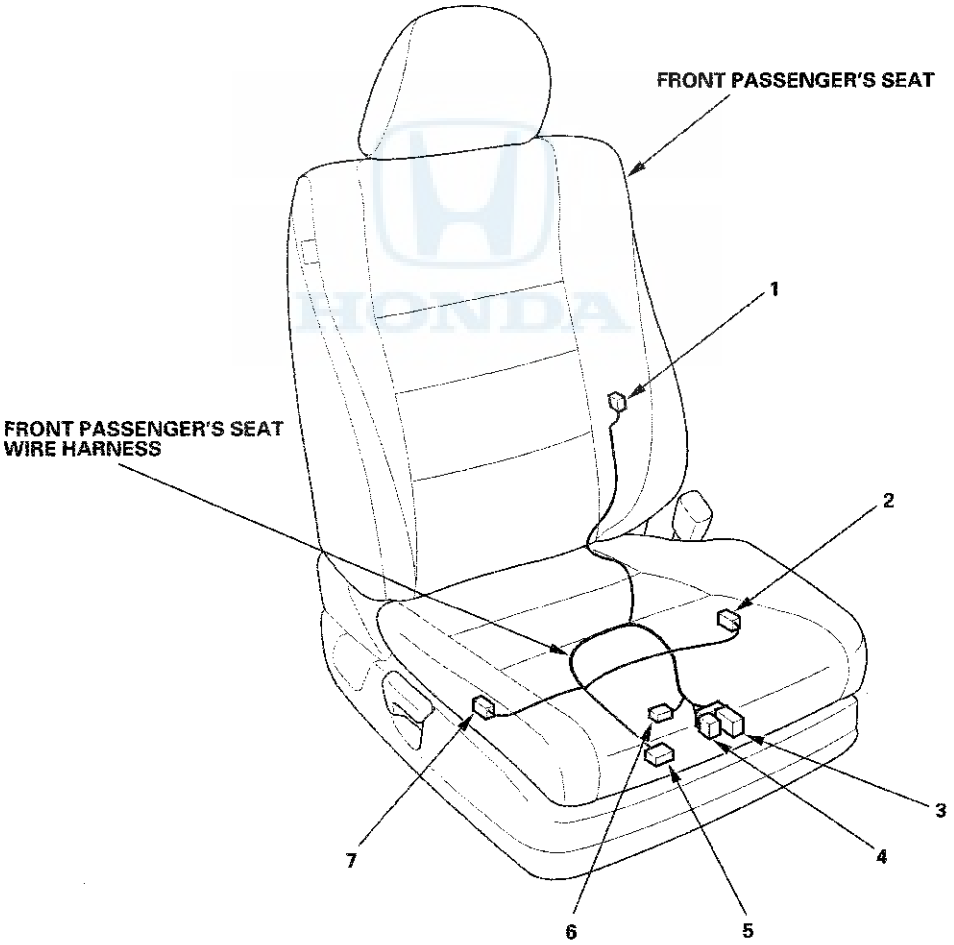

Connector to Harness Index (cont'd)

A/C Wire Harness (Climate Control System with Navigation)

Connector or Terminal	Ref	Cavities	Location	Connects to	Notes
Blower motor	8	2	Under right side of dash		
Climate control unit connector A	6	28	Under middle of dash		
Climate control unit connector B	7	12	Under middle of dash		
Driver's air mix control motor	1	7	Under middle of dash		
Evaporator temperature sensor	3	2	Under middle of dash		
Mode control motor	4	7	Under middle of dash		
Passenger's air mix control motor	11	7	Under middle of dash		
Power transistor	9	4	Under middle of dash		
Recirculation control motor	5	7	Under middle of dash		
C351	2	2	Under middle of dash	Left engine compartment wire harness (see page 22-30)	
C409	10	20	Under middle of dash	Audio wire harness (see page 22-40)	

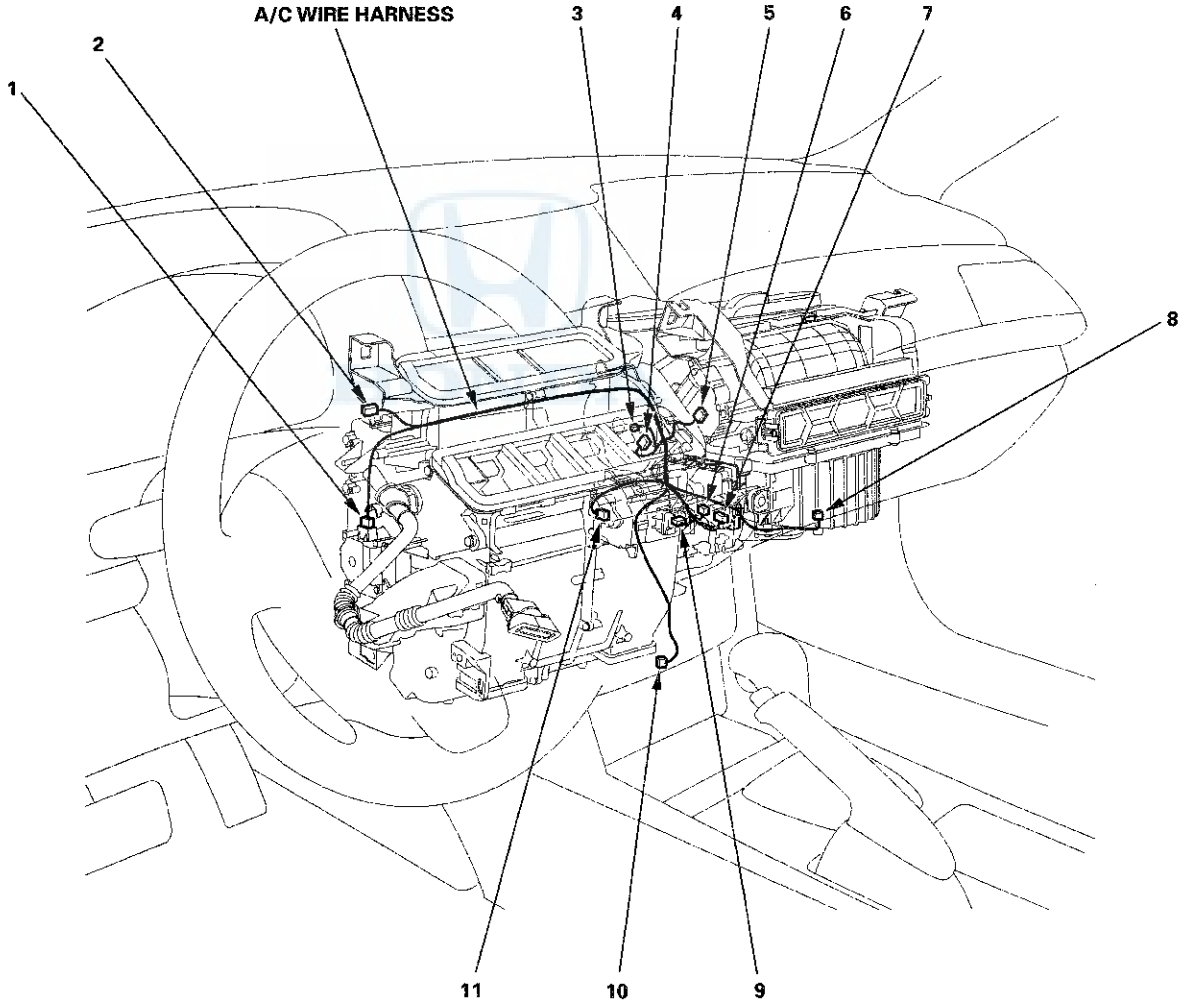

A/C Wire Harness (Climate Control System without Navigation)

Connector or Terminal	Ref	Cavities	Location	Connects to	Notes
Blower motor	6	2	Under right side of dash		
Driver's air mix control motor	1	7	Under middle of dash		
Evaporator temperature sensor	4	2	Under middle of dash		
Mode control motor	3	7	Under middle of dash		
Passenger's air mix control motor	9	7	Under middle of dash		
Power transistor	7	4	Under middle of dash		
Recirculation control motor	5	7	Under middle of dash		
C351	2	2	Under middle of dash	Left engine compartment wire harness (see page 22-30)	
C409	8	20	Under middle of dash	Audio wire harness (see page 22-42)	

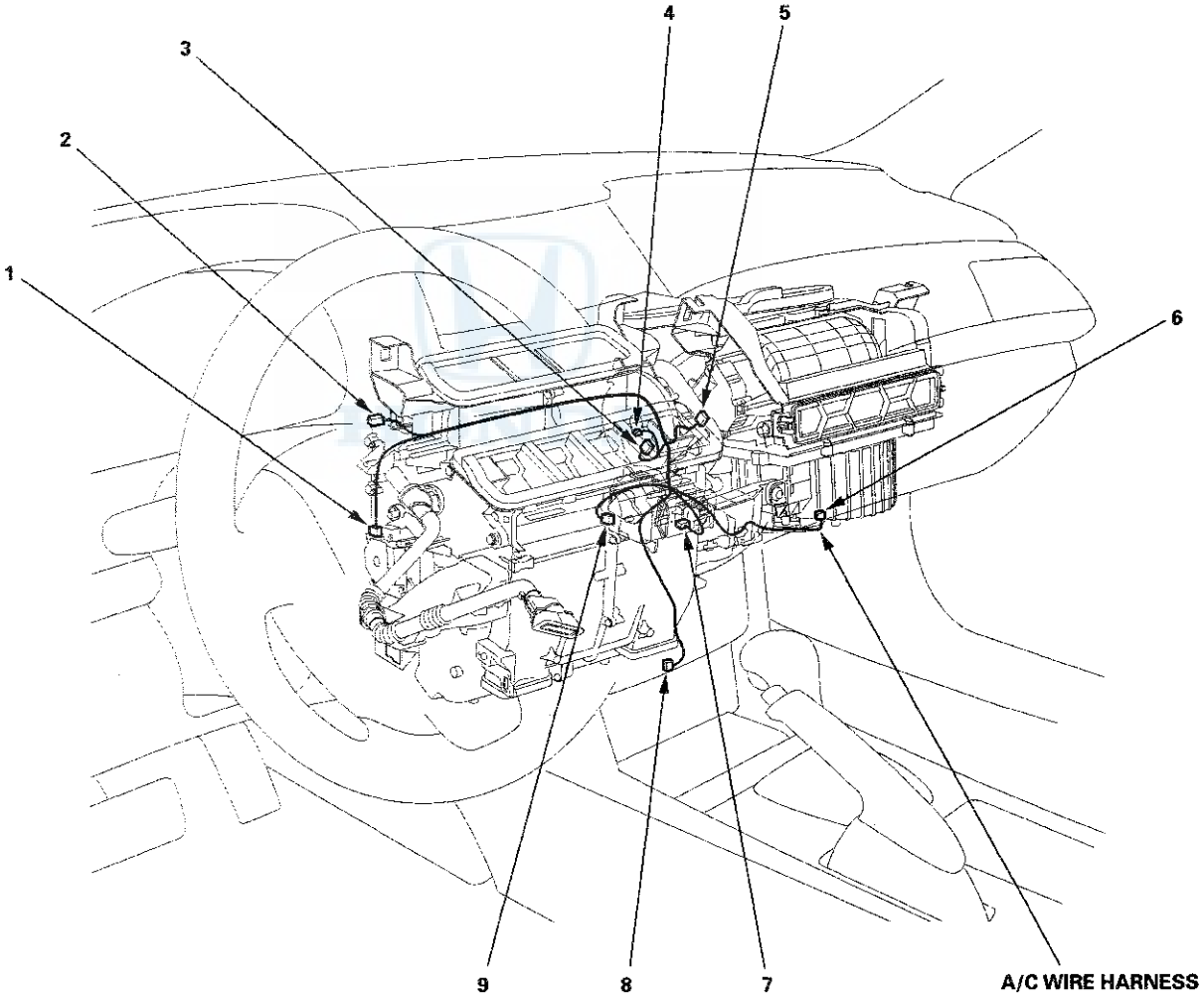

Connector to Harness Index (cont'd)

A/C Wire Harness (HVAC Control System)

Connector or Terminal	Ref	Cavities	Location	Connects to	Notes
Air mix control motor	1	7	Under middle of dash		
Blower motor	6	2	Under right side of dash		
Evaporator temperature sensor	4	2	Under middle of dash		
Mode control motor	3	7	Under middle of dash		
Power transistor	7	4	Under middle of dash		
Recirculation control motor	5	7	Under middle of dash		
C351	2	2	Under middle of dash	Left engine compartment wire harness (see page 22-30)	
C409	8	20	Under middle of dash	Audio wire harness (see page 22-44)	

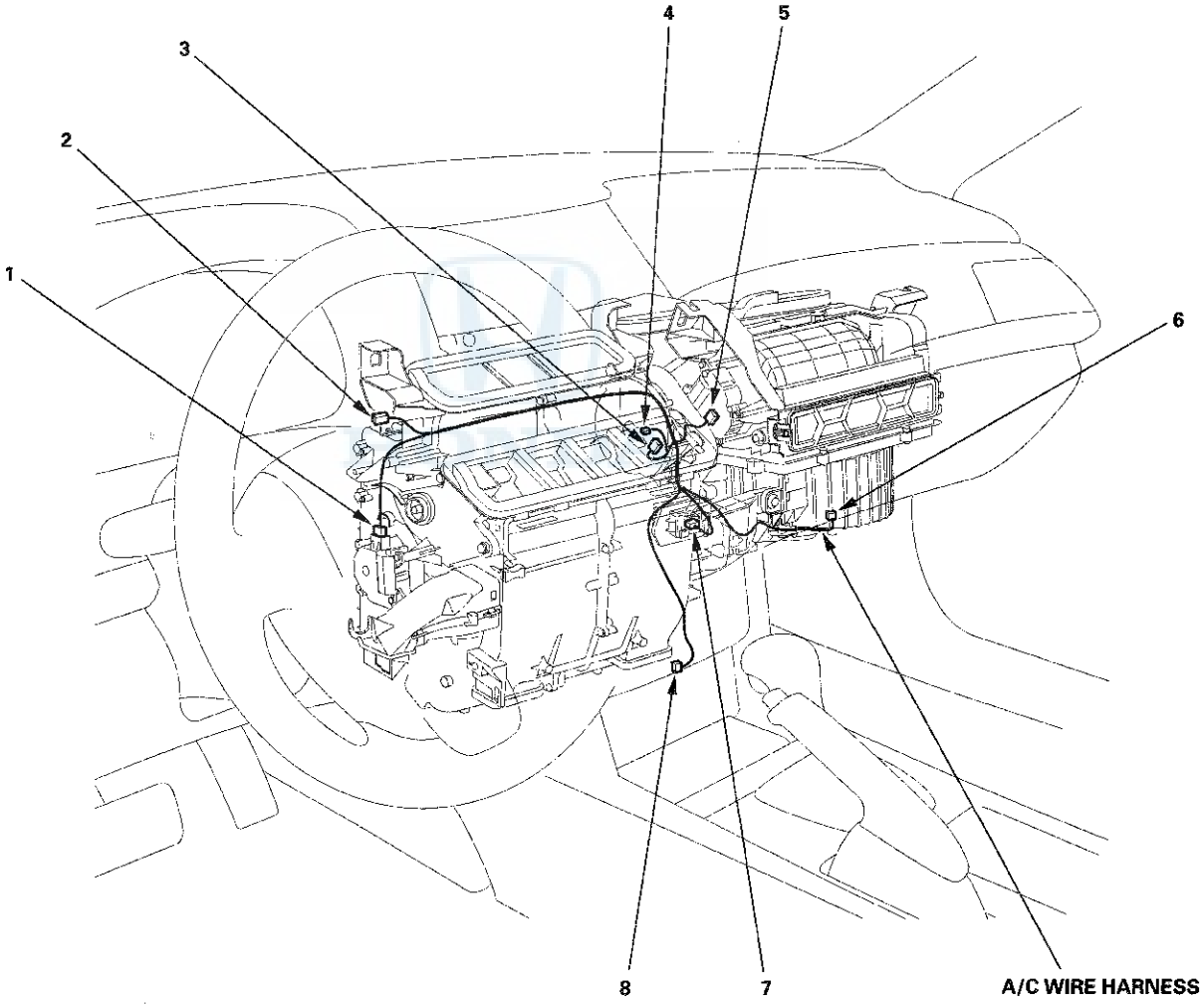

Cable Reel Subharness

Connector or Terminal	Ref	Cavities	Location	Connects to	Notes
Audio remote switch	1	12	Steering wheel		
Cable reel connector C	4	20	Steering wheel		
Cruise control set/resume/cancel switch	2	12	Steering wheel		
HandsFreeLink/Voice control switch	5	5	Steering wheel		Navigation
Horn switch	3	2	Steering wheel		

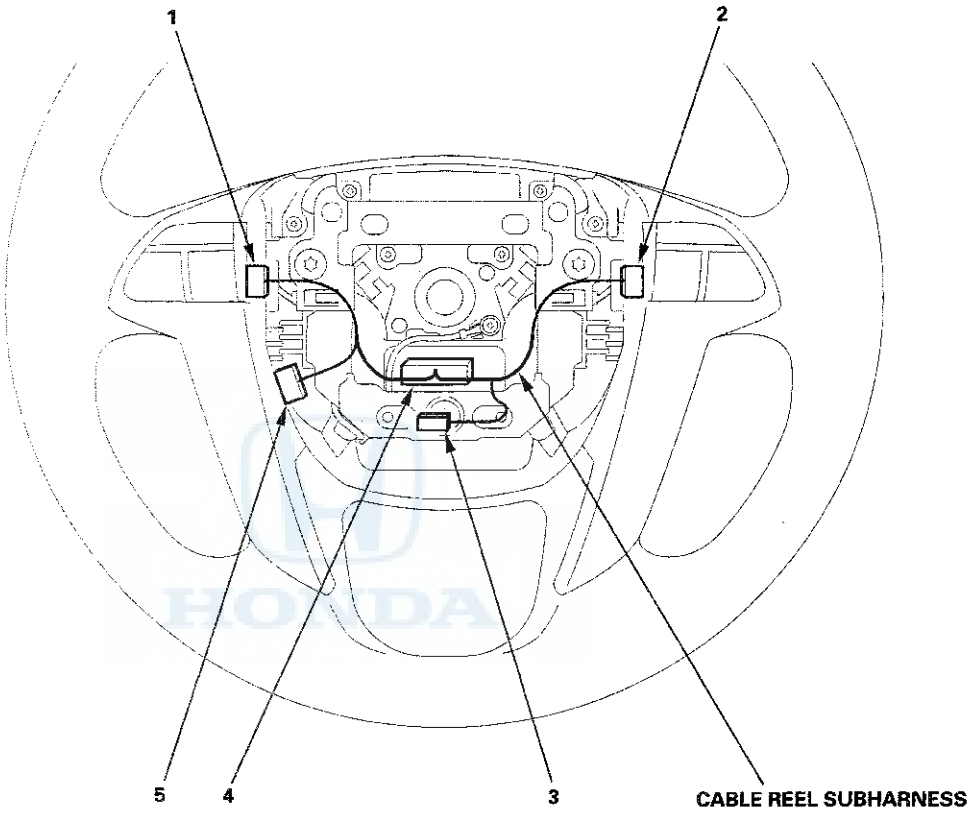

Connector to Fuse/Relay Box Index

Under-hood Fuse/Relay Box

Socket	Ref	Terminal	Connects to	Notes
A (electrical load detector (ELD))	11	3	Left engine compartment wire harness (see page 22-28)	
A/C compressor clutch relay	12	4		
B	14	14	Left engine compartment wire harness (see page 22-28)	
Blower motor relay	1	4		
C	13	5	Left engine compartment wire harness (see page 22-28)	
Electronic throttle control system (ETCS) control relay	6	4		
Horn relay	2	4		
Ignition coil relay	5	4		
PGM-FI main relay 1 (FI MAIN)	3	4		
PGM-FI subrelay	4	4		
Radiator fan relay	7	4		
Rear window defogger relay	8	4		
T101	9	——	Starter subharness (see page 22-18)	
T102	10	——	Starter subharness (see page 22-18)	

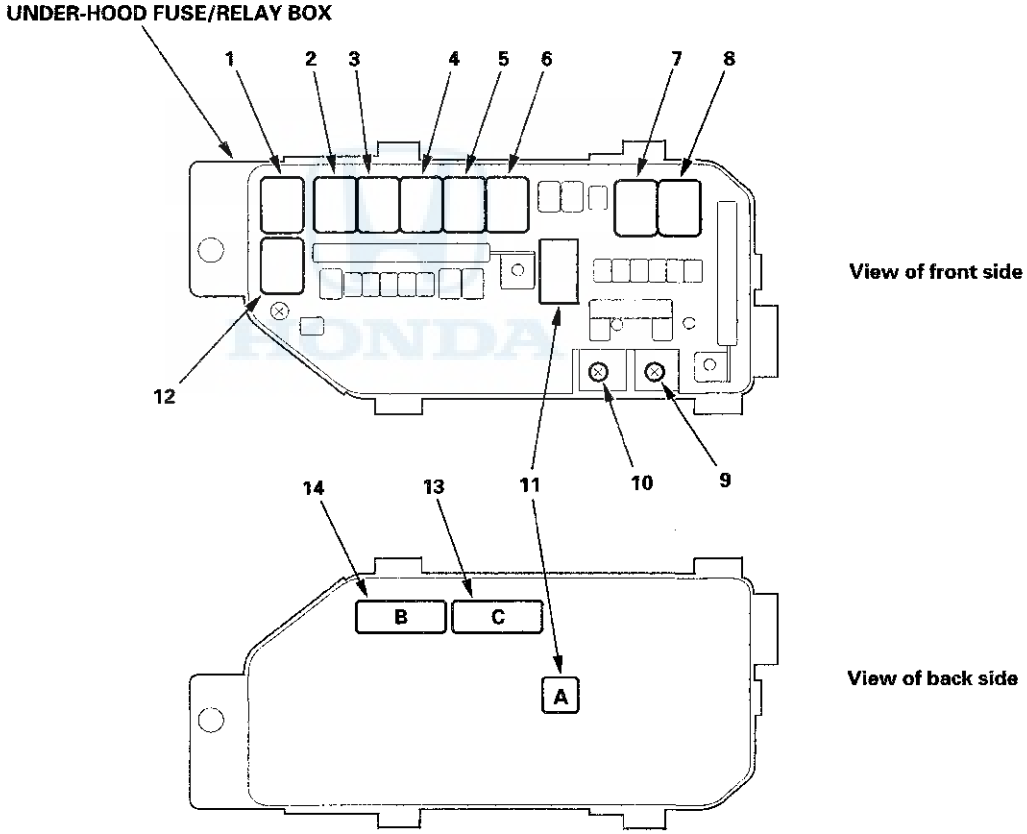

Driver's Under-dash Fuse/Relay Box

Socket	Ref	Terminal	Connects to	Notes
A	1	——	Not used	
Accessory power socket relay	4	4		
B	2	2	Dashboard wire harness (see page 22-32)	
C	3	5	Dashboard wire harness (see page 22-32)	
D	11	16	Left side wire harness • 4-door (see page 22-50) • 2-door (see page 22-52)	
E	10	20	Left side wire harness • 4-door (see page 22-50) • 2-door (Not used)	
F	9	33	Left engine compartment wire harness (see page 22-28)	
G	8	13	Left engine compartment wire harness (see page 22-28)	
H (optional connector)	7	12	Not used	
K (MICU service check connector)	6	3		
M	13	2	Dashboard wire harness (see page 22-32)	
N	14	16	Dashboard wire harness (see page 22-32)	
P	15	20	Dashboard wire harness (see page 22-32)	
PGM-FI main relay 2 (FUEL PUMP)	12	4		
Q	17	20	Dashboard wire harness (see page 22-32)	
R	16	24	Dashboard wire harness (see page 22-32)	
Starter cut relay	5	4		

DRIVER'S UNDER-DASH FUSE/RELAY BOX

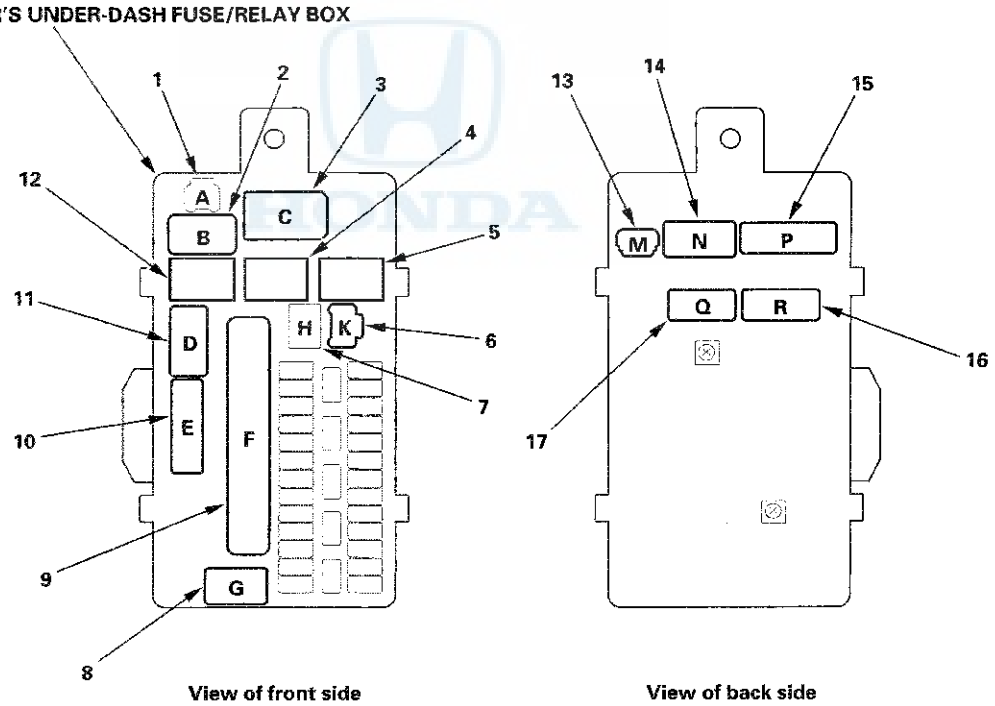

View of front side

View of back side

Connector to Fuse/Relay Box Index (cont'd)

Passenger's Under-dash Fuse/Relay Box

Socket	Ref	Terminal	Connects to	Notes
A	1	38	Dashboard wire harness (see page 22-36)	
B	8	1	Dashboard wire harness (see page 22-36)	
C	7	12	Dashboard wire harness (see page 22-36)	
D	2	28	Audio wire harness (see page 22-40)	* 3
			Audio wire harness (see page 22-42)	* 4
			Audio wire harness (see page 22-44)	* 5
E	6	18	Right engine compartment wire harness (see page 22-26)	
F	5	2	Not used	
G	3	16	Right side wire harness • 4-door (see page 22-46) • 2-door (see page 22-48)	* 1
H	4	38	Right side wire harness • 4-door (see page 22-46) • 2-door (see page 22-48)	* 2

* 1: LX, LX PZEV, LX-P, LX-P PZEV, LX-S, LX-S PZEV
* 2: Except LX, LX PZEV, LX-P, LX-P PZEV, LX-S, LX-S PZEV
* 3: With premium audio system and navigation system
* 4: With premium audio system without navigation system
* 5: Without premium audio system

PASSENGER'S UNDER-DASH FUSE/RELAY BOX

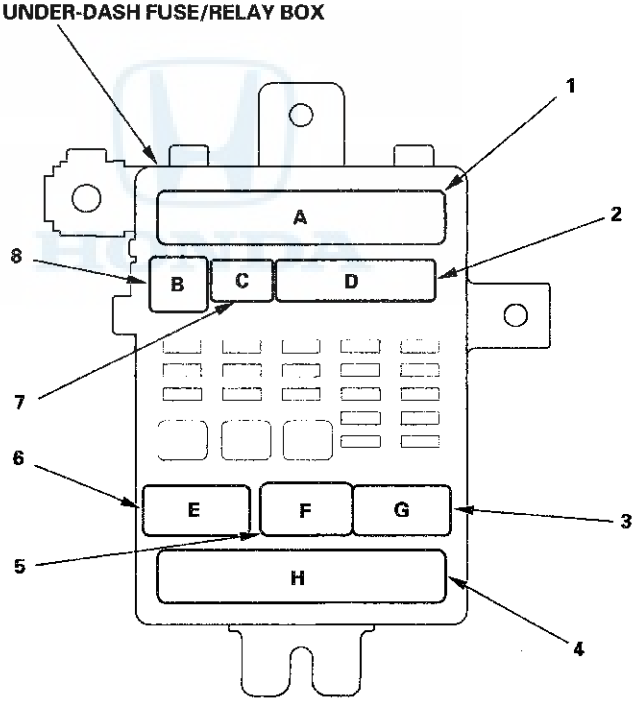

HONDA

Power Distribution

Fuse to Components Index

Under-hood Fuse/Relay Box

Fuse Number			Amps	Component(s) or Circuit(s) Protected
1		MAIN	100 A	Battery, Power supply
		AS F/B	40 A	Passenger's under-dash fuse/relay box
2	2-2	ABS/VSA	40 A	VSA modulator-control unit (FSR)
	2-3	VSA MTR	30 A	VSA modulator-control unit (MTR)
	2-4	AS F/B OP	40 A	Passenger's under-dash fuse/relay box
3	3-1	IG MAIN	50 A	Driver's under-dash fuse/relay box
	3-2	DR F/B	40 A *1	Driver's under-dash fuse/relay box
	3-3	AS LT MAIN	30 A	Passenger's under-dash fuse/relay box
	3-4	DR F/B	60 A *2	Driver's under-dash fuse/relay box
	3-5	DR LT MAIN	30 A	Driver's under-dash fuse/relay box
	3-6	MAIN FAN MTR	30 A	Relay circuit board (in the under-hood fuse/relay box)
	3-7	WIP MTR	30 A	Relay circuit board (in the under-hood fuse/relay box)
4			40 A	Rear window defogger relay, Rear window defogger
5			20 A	Relay circuit board (in the under-hood fuse/relay box)
6			———	Not used
7			———	Not used
8			40 A	Blower motor relay, Blower motor
9			15 A	Driver's MICU (HAZARD)
10			20 A	Brake pedal position switch, Horn relay
11			———	Not used
12			———	Not used
13			15 A	Ignition coil relay, Ignition coils
14			15 A	A/F sensor, ECM/PCM (SUBRLY), PGM-FI subrelay
15			10 A	Driver's MICU (VBU), Gauge control module, HandsFreeLink control unit, Immobilizer-keyless control unit, Passenger's MICU, Power window master switch
16			7.5 A	Ceiling light, Ignition key light, Map lights, Trunk light
17			15 A	CKP sensor, CMP sensor, ECM/PCM (ETCSRLY), ECM/PCM (IGP), ECM/PCM (IMOFPR), ECM/PCM (MRLY), ETCS control relay, Injectors, MAF sensor, PGM-FI main relay 1(FI MAIN), PGM-FI main relay 2 (FUEL PUMP)
18			15 A	ECM/PCM (VBETCS), ETCS control relay
19			———	Not used
20			7.5 A	A/C compressor clutch relay, A/C compressor clutch
21			7.5 A	A/C condenser fan relay

* 1: LX, LX PZEV, LX-P, LX-P PZEV, LX-S, LX-S PZEV
* 2: Except LX, LX PZEV, LX-P, LX-P PZEV, LX-S, LX-S PZEV

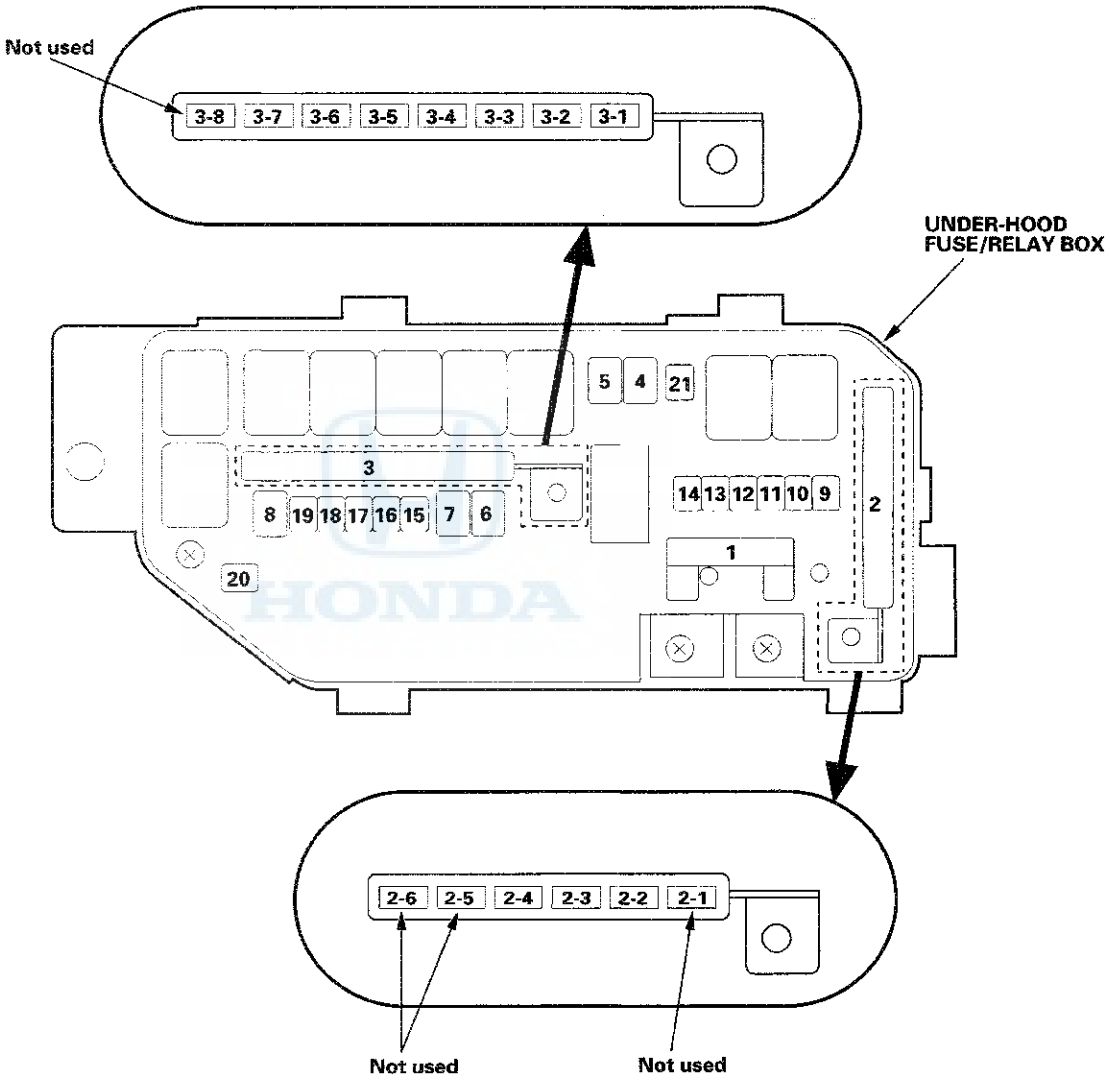
Not used
3-8
3-7
3-6
3-5
3-4
3-3
3-2
3-1
UNDER-HOOD
FUSE/RELAY BOX
5
4
21
3
8
19
18
17
16
15
7
6
14
13
12
11
10
9
2
1
20
2-6
2-5
2-4
2-3
2-2
2-1
Not used
Not used

(cont'd)

Fuse to Components Index (cont'd)

Driver's Under-dash Fuse/Relay Box

Fuse Number	Amps	Component(s) or Circuit(s) Protected
1	———	Not used
2	———	Not used
3	15 A	Washer motor relay circuit (in the passenger's under-dash fuse/relay box)
4	7.5 A	Wiper intermittent relay circuit, Wiper motor high/low relay circuit, Wiper motor relay circuit (in the under-hood fuse/relay box)
5	7.5 A	Automatic dimming inside mirror, Back-up lights, Driver's MICU, Electrical compass unit, Gauge control module, Navigation unit, Passenger's MICU, Reverse relay circuit (in the driver's under-dash fuse/relay box), Shift lock solenoid (A/T), TPMS control unit
6	7.5 A	VSA modulator-control unit, Yaw rate-lateral acceleration sensor
7	15 A	Electrical load detector (ELD), EVAP canister purge valve, Secondary HO2S,
8	7.5 A	STS
9	20 A	ECM/PCM (FUEL PUMP), Immobilizer-keyless control unit, PGM-FI main relay 2 (FUEL PUMP)
10	10 A	ECM/PCM (VBSOL)
11	10 A	SRS unit
12	7.5 A	Front passenger's airbag cutoff indicator, ODS unit, SRS unit
13	———	Not used
14	10 A	ACM
15	7.5 A	Driver's MICU (DAY LT)
16	7.5 A	Audio-HVAC subdisplay unit, Climate control unit, Center information display, Driver's seat heater, Front passenger's seat heater, HVAC control unit, Rear window defogger relay, Recirculation control motor
17	7.5 A	Driver's MICU (ACC KEY LOCK)
18	7.5 A	Audio unit, Center information display, Front accessory power socket relay, HandsFreeLink control unit, HFL/ Navigation microphone, Ignition key switch (A/T), Interface dial, Navigation display unit, Navigation unit
19	20 A	Driver's power seat slide motor, Driver's power seat front up-down motor
20	20 A	Moonroof control unit/motor
21	20 A	Driver's power seat recline motor, Driver's power seat rear up-down motor
22	20 A	Driver's MICU, Left rear power window switch (4-door)
23	15 A	Front accessory power socket relay, Front accessory power socket
24	20 A	Power window master switch
25	10 A	Driver's door lock actuator, Left rear door lock actuator (4-door), Trunk lid release actuator
26	10 A	Left front fog light
27	10 A	Driver's MICU, Left front parking light, Left front side marker light, License plate light(s), Taillights
28	10 A	Driver's MICU (LEFT H/L HI)
29	7.5 A	TPMS control unit
30	10 A	Driver's MICU (LEFT H/L LO)
31	———	Not used

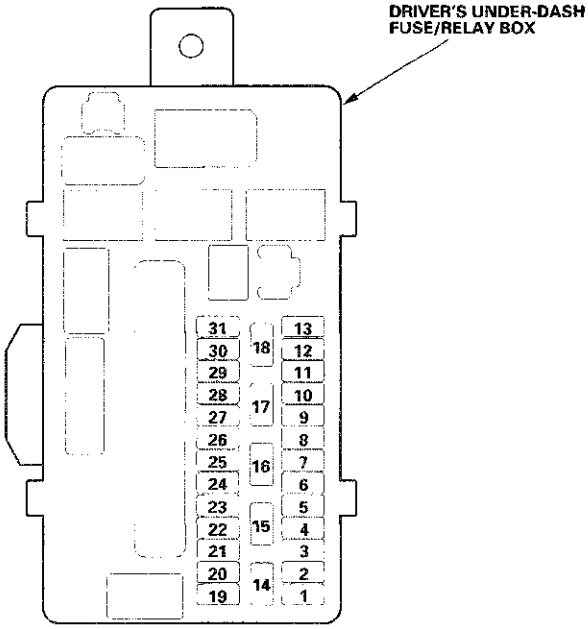

Passenger's Under-dash Fuse/Relay Box

Fuse Number	Amps	Component(s) or Circuit(s) Protected
1	10 A	Passenger's MICU (RIGHT H/L HI)
2	10 A	Passenger's MICU, Right front parking light, Right front side marker light
3	10 A	Right front fog light
4	10 A	Passenger's MICU (RIGHT H/L LO)
5	———	Not used
6	7.5 A	Ambient light, A/T gear position indicator panel light, Climate control unit light, Driver's seat heater switch light, Front passenger's seat heater switch light, Glove box light, Hazard warning switch light, HVAC control unit light, Moonroof switch light, Navigation display unit, Navigation unit, Steering wheel switches lights, VSA OFF switch light
7	———	Not used
8	20 A	Front passenger's power seat recline motor
9	———	Not used
10	10 A	Front passenger's door lock actuator, Passenger's MICU, Right rear door lock actuator (4-door)
11	20 A	Right rear power window switch (4-door)
12	15 A	Console accessory power socket relay, Console accessory power socket
13	20 A	Front passenger's power window switch
14	———	Not used
15*1	20 A	Stereo amplifier*1
16	———	Not used
17	———	Not used
18	10 A	Driver's lumbar support motor
19	15 A	Driver's seat heater, Front passenger's seat heater
20	———	Not used
21	———	Not used
22	———	Not used

* 1: With premium audio system

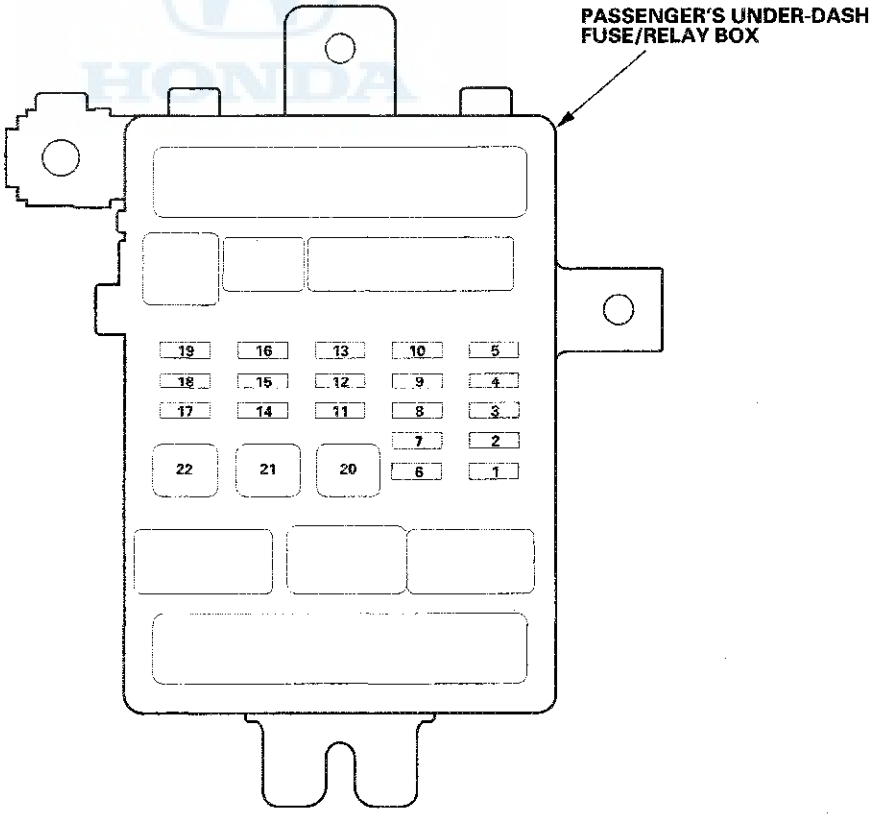

Ground Distribution

Ground to Components Index

Ground	Component or circuit grounded
G1	Battery
G2	Engine
G3	Transmission housing
G101	A/T clutch pressure control solenoid valves A, B, C, CKP sensor, CMP sensor A, CMP sensor B, Data link connector, ECM/PCM, Immobilizer-keyless control unit, Rocker arm oil control solenoid (M/T), Rocker arm oil control solenoid A (A/T), Rocker arm oil control solenoid B (A/T), Rocker arm oil pressure switch (M/T), Rocker arm oil pressure switch A (A/T), Rocker arm oil pressure switch C (A/T), Transmission range switch (A/T), VTC oil control solenoid valve Shielding between the ECM/PCM and the secondary HO2S (Sensor 2) Shielding between the ECM/PCM and the knock sensor
G102	Ignition coils
G201	Passenger's MICU (PG) (2 wires), Power steering pressure (PSP) switch, Right front parking light, Right front side marker light, Right front turn signal light, Right headlight (high)*2, Right headlight (low), Washer fluid level switch, Washer motor
G202	VSA modulator-control unit
G203*1	Right headlight (high)
G301	Blower motor relay, Elecrical load detector (ELD), Wiper motor, Under-hood fuse/relay box (wiper relay circuit)
G302	A/C condenser fan motor, Brake fluid level switch, Clutch switch (M/T), Hood switch (with security), Left front parking light, Left front side marker light, Left front turn signal light, Left headlight (high), Left headlight (low), Power transistor, Radiator fan motor
G401	Audio unit*3, Audio-HVAC subdisplay unit, Audio-HVAC display unit, Climate control unit, Glove box light, HVAC control unit, Interface dial, Navigation display unit, Navigation unit, Stereo amplifier*3
G402	Audio unit, Stereo amplifier*3
G501	Automatic dimming inside mirror, Cable reel (steering wheel switches ground), Driver's door lock knob switch/key cylinder switch, Driver's MICU (2 wires), Driver's power window motor, Gauge control module, HandsFreeLink control unit, HFL/Navigation microphone, Left power mirror defogger, Map lights, Moonroof switch, Optional connector (for automatic dimming inside mirror), Power mirror switch, Power window master switch (including driver's door lock switch), Vanity mirror lights, VSA OFF switch
G502	Data link connector, Driver's MICU (2 wires), Gauge control module, MICU service check connector, Power window master switch, Moonroof control unit/motor
G503	A/T gear position indicator panel light, Console accessory power socket, Console accessory power socket relay, Driver's seat heater switch, Front passenger's seat heater switch, Front accessory power socket, Ignition key switch, Park-pin switch, TPMS control unit, Yaw rate-lateral acceleration sensor
G504	SRS unit (2 wires)
G505	Front passenger's door lock knob switch, Front passenger's power window switch, Passenger's MICU (2 wires), Right power mirror defogger
G601	Driver's under-dash fuse/relay box (door lock relay circuit), Front accessory power socket relay, High mount brake light, Left rear door lock knob switch (4-door), Left rear power window switch (4-door)
G602	Left back-up light, Left brake light/taillight, Left rear turn signal light, License plate light(s), Right back-up light, Right brake light/taillight, Right rear turn signal light, Trunk lid latch switch
G603	Fuel pump
G651	Electrical compass unit, Navigation display unit, Navigation unit, Passenger's under-dash fuse/relay box (door lock relay circuit, washer motor relay circuit), Right rear door lock knob switch (4-door), Right rear power window switch (4-door)
G701	Driver's lumbar support switch, Driver's power seat switch, Driver's seat-back heater, Driver's seat belt buckle switch, Driver's seat heater relays, Driver's seat position sensor
G702	Front passenger's seat belt buckle switch, Front passenger's seat heater, ODS unit
G801	Rear window defogger

* 1: EX-L, EX-L PZEV
* 2: Except EX-L, EX-L PZEV
* 3: With premium audio system

Under-hood Fuse/Relay Box

Removal and Installation

Special Tools Required
Relay puller 07AAC-000A1A0

NOTE: The under-hood fuse/relay box is a part of the left engine compartment wire harness, and it cannot be replaced by itself.

Removal

1. Do the battery terminal disconnection procedure (see page 22-89).

2. Open the cover (A), then remove the screws (B) for the alternator and battery cable terminals.

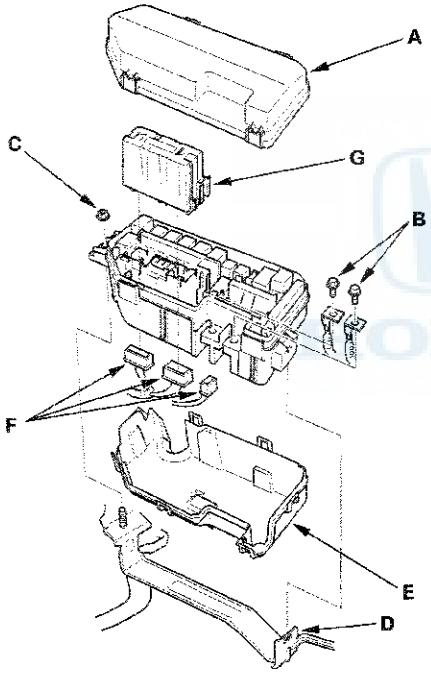

3. Remove the nut (C), and release the tab (D) bottom cover (E) from the under-hood fuse/relay box.

4. Disconnect the connectors (F) from the under-hood fuse/relay box.

5. Remove the relay circuit board (G) from the under-hood fuse/relay box.

6. Carefully remove the relays using the relay puller (see page 22-91).

   NOTE: Do not use pliers. Pliers will damage the relays, which could cause the engine to stall or not start.

Installation

1. Install the relays and connect the connectors to the under-hood fuse/relay box, then install the under-hood fuse/relay box in the reverse order of removal.

2. Install the removed parts in the reverse order of removal.

3. Do the battery terminal reconnection procedure (see page 22-89).

4. Confirm that all systems work properly.

Driver's Under-dash Fuse/Relay Box (MICU) Removal/Installation

Special Tools Required
Relay puller 07AAC-000A1A0

USA models

NOTE: SRS components are located in this area. Review the SRS component locations 4-door (see page 24-19), 2-door (see page 24-21), and precautions and procedures (see page 24-23) before doing repairs or servicing.

Removal

1. Do the battery terminal disconnection procedure (see page 22-89).

2. Remove the driver's dashboard lower cover (see page 20-153), and the left kick panel:

   - 4-door (see page 20-99)
   - 2-door (see page 20-97)

3. Disconnect the connectors from the fuse side of the driver's under-dash fuse/relay box (A).

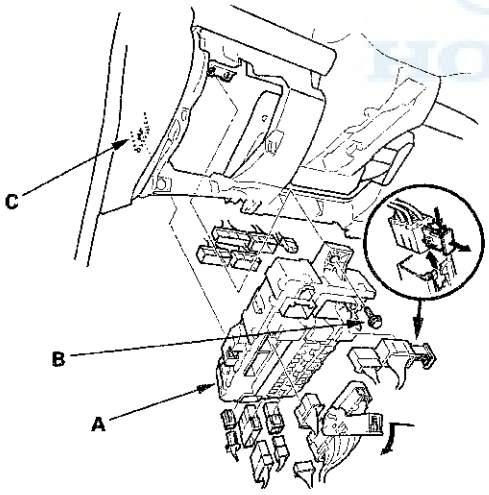

4. Remove the mounting bolt (B), release the tab (C), and pull the driver's under-dash fuse/relay box away from the body.

5. Disconnect the connectors from the back side of the driver's under-dash fuse/relay box, then remove the driver's under-dash fuse/relay box.

6. Carefully remove the relays using the relay puller (see page 22-91).

   NOTE: Do not use pliers. Pliers will damage the relays, which could cause the engine to stall or not start.

Installation

1. Install the relays and connect the connectors to the driver's under-dash fuse/relay box, then install the driver's under-dash fuse/relay box in the reverse order of removal.

2. Install the removed parts in the reverse order of removal.

3. Do the battery terminal reconnection procedure steps 1 to 4 (see page 22-89).

4. Register the immobilizer system with the HDS (see page 22-402).

   NOTE: The imoes unit is built into the driver's MICU which is part of the driver's under-dash fuse/relay box. Because of this construction, the imoes must be registered, or the vehicle will not start.

5. Confirm that all systems work properly.

Canada models

NOTE: SRS components are located in this area. Review the SRS component locations 4-door (see page 24-19), 2-door (see page 24-21), and precautions and procedures (see page 24-23) before doing repairs or servicing.

Removal

1. Do the battery terminal disconnection procedure (see page 22-89).

2. Remove the driver's dashboard lower cover (see page 20-153), and the left kick panel:

   - 4-door (see page 20-99)
   - 2-door (see page 20-97)

3. Loosen the bolts (A), then remove the bolt (B) from the bracket (C).

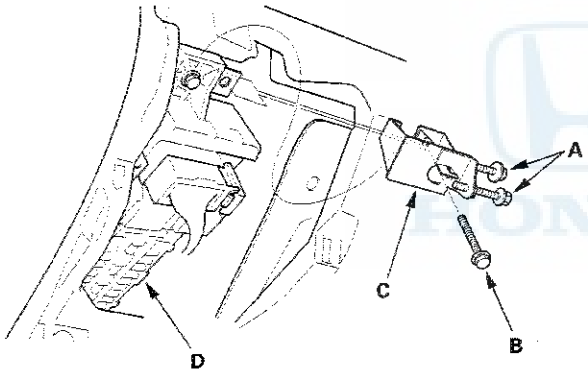

4. Remove the bracket from the driver's under-dash fuse/relay box (D).

5. Disconnect the connectors from the fuse side of the driver's under-dash fuse/relay box (A).

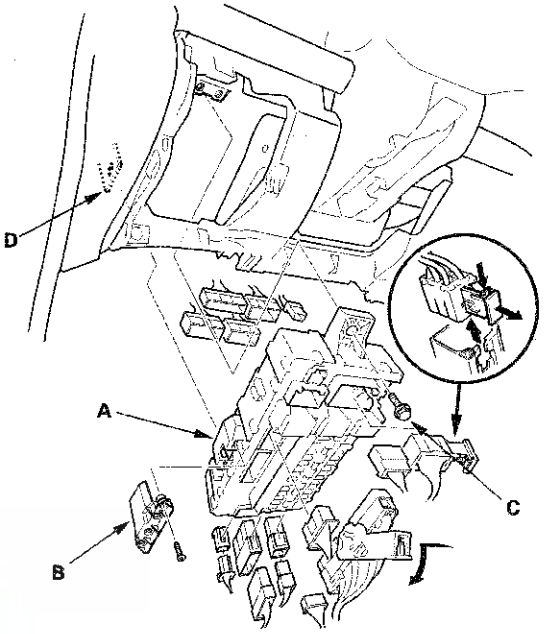

6. Remove the screws and cover (B) from the driver's under-dash fuse/relay box.

7. Remove the mounting bolt (C), release the tab(D), and pull the driver's under-dash fuse/relay box away from the body.

8. Disconnect the connectors from the back side of the driver's under-dash fuse/relay box, then remove the driver's under-dash fuse/relay box.

9. Carefully remove the relays using the relay puller (see page 22-91).

   NOTE: Do not use pliers. Pliers will damage the relays, which could cause the engine to stall or not start.

(cont'd)

Driver's Under-dash Fuse/Relay Box (MICU) Removal/Installation (cont'd)

Installation

1. Install the relays and connect the connectors to the driver's under-dash fuse/relay box, then install the driver's under-dash fuse/relay box in the reverse order of removal.

2. Install the removed parts in the reverse order of removal.

3. Do the battery terminal reconnection procedure steps 1 to 4 (see page 22-89).

4. Register the immobilizer system with the HDS (see page 22-402).

   NOTE: The imoes unit is built into the driver's MICU which is part of the driver's under-dash fuse/relay box. Because of this construction, the imoes must be registered, or the vehicle will not start.

5. Confirm that all systems work properly.

HONDA

Passenger's Under-dash Fuse/Relay Box (MICU) Removal/Installation

NOTE: SRS components are located in this area. Review the SRS component locations 4-door (see page 24-19), 2-door (see page 24-21), and precautions and procedures (see page 24-23) before doing repairs or servicing.

Removal

1. Do the battery terminal disconnection procedure (see page 22-89).

2. Remove the right kick panel:

   - 4-door (see page 20-99)
   - 2-door (see page 20-97)

3. Disconnect the connectors from the passenger's under-dash fuse/relay box (A).

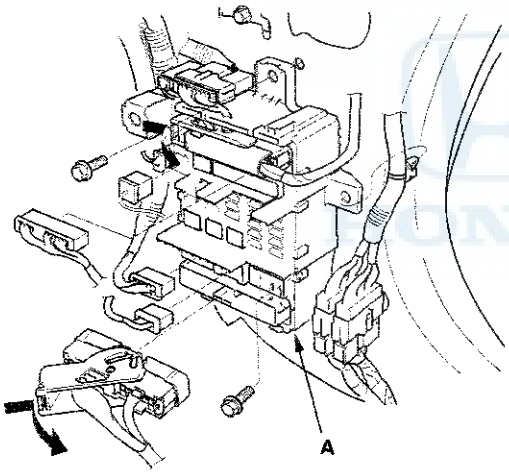

4. Loose the mounting bolt from the lower side of passenger's under-dash fuse/relay box.

5. Remove the mounting bolt from the upper side of passenger's under-dash fuse/relay box, and remove the passenger's under-dash fuse/relay box.

Installation

1. Install the relays and connect the connectors to the passenger's under-dash fuse/relay box, then install the passenger's under-dash fuse/relay box in the reverse order of removal.

2. Install the removed parts in the reverse order of removal.

3. Do the battery terminal reconnection procedure (see page 22-89).

4. Confirm that all systems work properly.

Battery Test

⚠ WARNING

A battery can explode if you do not follow the proper procedure, causing serious injury to anyone nearby. Follow all procedures carefully and keep sparks and open flames away from the battery.

Required Test Equipment
Honda Electrical System Analyzer (ED-18 Battery tester): T/N INBED18LLH

Ordering Information
To order an Electrical System Analyzer, go to the Honda Tool and Equipment catalog on the iN, or call 888-424-6857.

Software Version
Make sure you have the latest software in the ED-18. To check the virsion on the do this:

- Press the POWER button.
- Select Reports, then press ENTER.
- Select i Version, then press ENTER.

If you do not have the correct version, call the Tools Hotline at 800-346-6327.

Using the ED-18 Battery Tester

NOTE: For set up, customization, and other available features, refer to the ED-18 user's manual.

1. Connect the leads to the positive and negative terminal of the battery.

2. Use the arrow keys to select the battery test, then press enter, then follow the prompts.

   NOTE: Make sure to enter the correct cold cranking ampere rating of the battery. If the number is not entered correctly, the redult will not be accurate.

3. Here are the five possible battery conditions:

   - Good Battery: The battery has at least 60 percent of its charge and requires no action.
   - Good-Recharge: The battery condition appears to be good, but charging is recommended and then retest. See your battery charger's instructions to fully charge the battery, then recheck. Do not charge the battery using the vehicle's alternator.
   - Charge and Retest: The battery condition is not not known because its charge is too low. Recharge the battery, then retest. See your battery's instructions to fully charge the battery, then recheck. Do not charge the battery using the vehicle's alternator.
   - Replace Battery: The battery condition is poor. Replace it.
   - Bad Cell: There is a problem with the battery. Replace it.

Battery Terminal Disconnection and Reconnection

Disconnection

NOTE: Some systems store data in memory that is lost when the battery is disconnected. Do the following procedures before disconnecting the battery.

1. Make sure you have the anti-theft code(s) for the audio and/or the navigation system (if equipped).
2. If you are replacing the audio unit, write down the audio presets (AM and FM), and the XM audio presets (if equipped), because the audio unit does not retain the presets after the battery is disconnected.
3. Make sure the ignition switch is in LOCK (0).
4. Disconnect and isolate the negative cable from the battery.

   NOTE: Always disconnect the negative cable from the battery first.
5. Disconnect the positive cable from the battery.

Reconnection

NOTE: Some systems store data in memory that is lost when the battery is disconnected. Do the following procedures to restore the system back to normal operation.

1. Clean the battery terminals.
2. Test the battery (see page 22-88).
3. Reconnect the positive cable (A) to the battery (B) first, then reconnect the negative cable (C) to the battery.

   NOTE: Always connect the positive cable to the battery first.

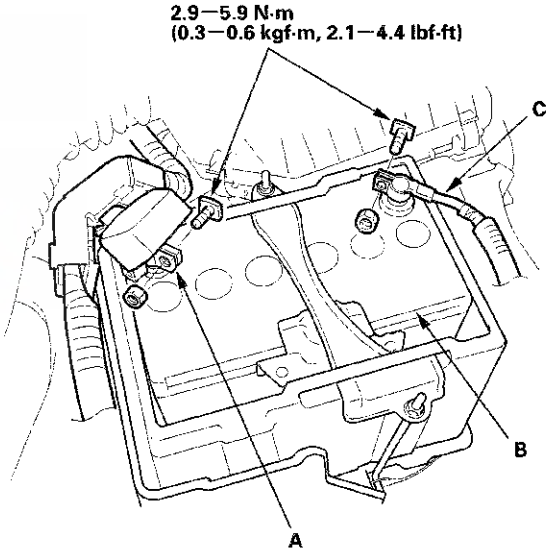

4. Apply multipurpose grease to the terminals to prevent corrosion.
5. Enter the anti-theft code(s) for the audio system and/or the navigation system (if equipped).
6. Enter the audio presets (if applicable), and enter the XM audio presets (if equipped).
7. Set the clock (for vehicles without navigation).

Battery Removal and Installation

NOTE: The battery terminal disconnection/reconnection procedure (see page 22-89) must be done before and after doing this procedure. Some systems store data in memory that is lost when the battery is disconnected.

Removal

1. Do the battery terminal disconnection procedure (see page 22-89).

2. Remove the two nuts (A) securing the battery setting plate, then remove the battery setting plate (B) and the battery (C).

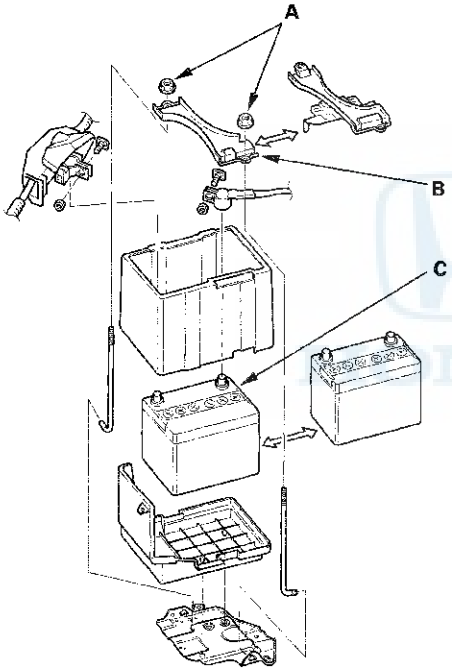

Installation

1. Install the battery (A), then install the battery setting plate (B).

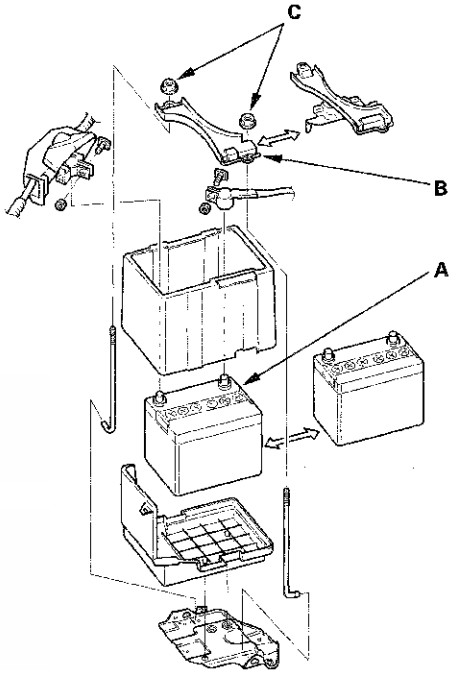

2. Tighten the two nuts (C) equally until the battery is stable.

   NOTE: Do not deform the battery setting plate by tightening the nuts too much.

3. Do the battery terminal reconnection procedure (see page 22-89).

   NOTE: Make sure the positive terminal and the negative terminal are not reverse-connected.

Power Relay Test

Special Tools Required
Relay puller 07AAC-000A1A0

Use this chart to identify the type of relay, then do the test listed for it.

Relay	Test
A/C compressor clutch relay	Normally-open type
Blower motor relay	
Console accessory power socket relay	
ETCS control relay	
Front accessory power socket relay*	
Horn relay	
Ignition coil relay	
PGM-FI main relay 1	
PGM-FI main relay 2 (FUEL PUMP)*	
PGM-FI subrelay	
Radiator fan relay	
Rear window defogger relay	
Seat heater relays (high)	
Starter cut relay*	
Seat heater relay (low)	Five-terminal type

*: Carefully remove the relay from the driver's under-dash fuse/relay box using the relay puller. Do not use pliers. Pliers will damage the relay.

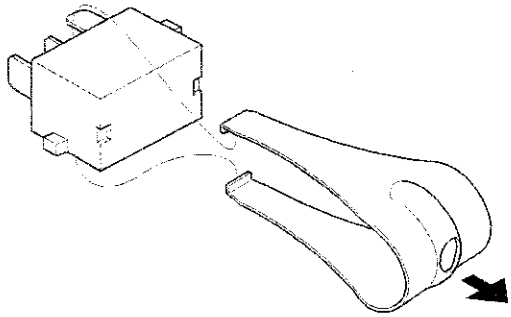

Normally-open type

Check for continuity between the terminals:

- There should be continuity between the terminals No. 1 and No. 2 when battery power is connected to the terminal No. 4, and body ground is connected to the terminal No. 3.
- There should be no continuity between the terminals No. 1 and No. 2 when power is disconnected.

Resistance type **Diode type**

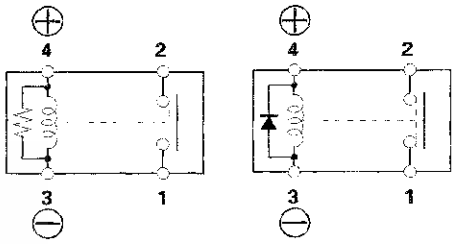

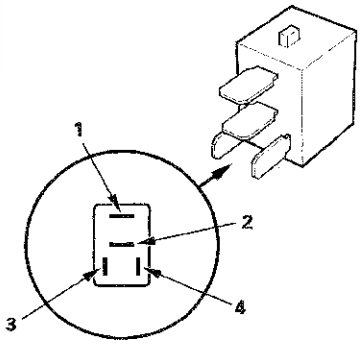

(cont'd)

Power Relay Test (cont'd)

Five-terminal type

Check for continuity between the terminals:

- There should be continuity between the terminals No. 1 and No. 2 when battery power is connected to the terminal No. 5, and body ground is connected to the terminal No. 3.
- There should be no continuity between the terminals No. 1 and No. 4 when power is disconnected.

Diode type

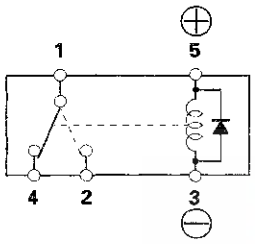

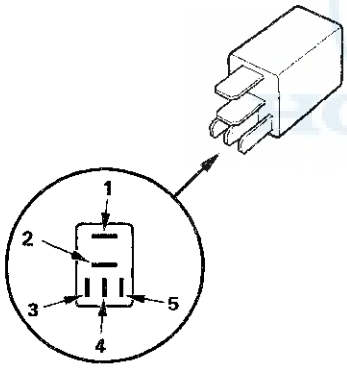

Relay Circuit Board Test

The relay circuit board is part of the under-hood fuse/relay box, and it contains these relays:

- A/C condenser fan relay
- Wiper motor relay
- Wiper intermittent relay
- Wiper high/low relay

1. Disconnect the negative battery cable, then disconnect the under-hood fuse/relay box connectors B (14P) and C (5P).

CONNECTOR B (14P)

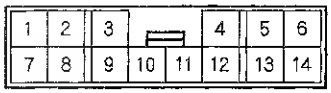

CONNECTOR C (5P)

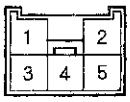

2. If any of these relays fails the test, replace the relay circuit board.

   A/C condenser fan relay
   There should be continuity between the terminals C1 and C3 when battery power is connected to the terminal B11, and body ground is connected to the terminal B7 (or B8). There should be no continuity between the terminals C1 and C3 when power is disconnected.

   Wiper motor relay circuit test:
   There should be continuity between the terminals C4 and B10, and terminals C4 and B12 when battery power is connected to the terminal B9, and body ground is connected to the terminal B3. There should be no continuity between the terminals C4 and B10, and terminals C4 and B12 when power is disconnected.

   Wiper intermittent relay circuit test:
   There should be battery voltage between the terminal C5 and body ground when battery power is connected to the terminals B9 and C4, and body ground is connected to the terminals B3 and B12. There should be no voltage between the terminal C5 and body ground when the terminal B12 is disconnected.

   Wiper high/low relay circuit test:
   There should be continuity between the terminals B3 and C2 when battery power is connected to the terminals B9 and C4, and body ground is connected to the terminals B3 and B10.
   There should be no continuity between the terminals B3 and C2, and there should be continuity between the terminals B3 and C5 when power is disconnected.

A/C condenser fan relay

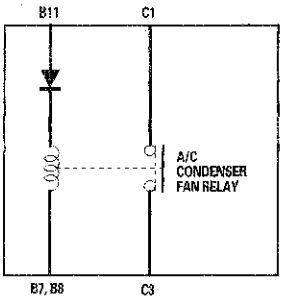

Wiper motor relay, Wiper intermittent relay, Wiper high/low relay

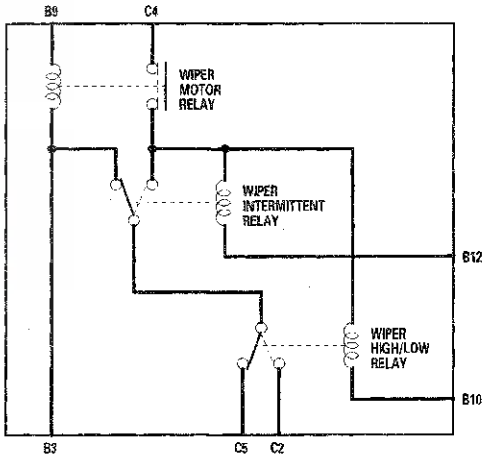

Ignition Switch

Test

SRS components are located in the area. Review the SRS component locations 4-door (see page 24-19), 2-door (see page 24-21), and precautions and procedures (see page 24-23) before doing repairs or servicing.

1. Do the battery terminal disconnection procedure (see page 22-89).
2. Remove the steering column covers (see page 20-168).
3. Disconnect the 5P connector (A) from the ignition switch (B).

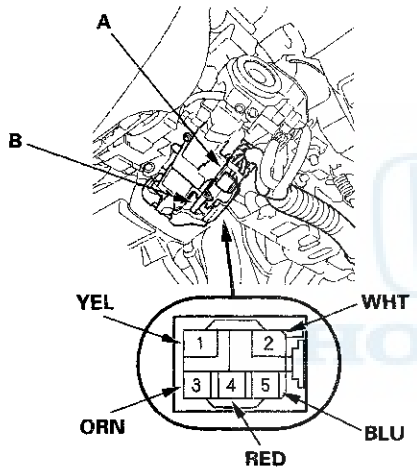

4. Check for continuity between the terminals in each switch position according to the table.

Position \ Terminal	RED (ACC)	WHT (BAT)	BLU (IG1)	ORN (IG2)	YEL (ST)
0 (LOCK)					
I (ACC)	○—○				
II (ON)	○—○	○—○	○—○	○—○	
III (START)		○—○	○—○	○—○	○—○

5. If the continuity is not as specified, replace the ignition switch (see page 22-94).
6. Do the battery terminal reconnection procedure (see page 22-89).

Replacement

SRS components are located in the area. Review the SRS component locations 4-door (see page 24-19), 2-door (see page 24-21), and precautions and procedures (see page 24-23) before doing repairs or servicing.

1. Do the battery terminal disconnection procedure (see page 22-89).
2. Remove the steering column covers (see page 20-168).
3. Disconnect the 5P connector (A) from the ignition switch (B).

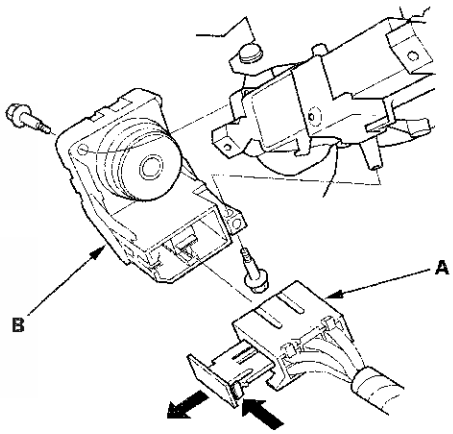

4. Remove the two screws and the ignition switch.
5. Install the parts in the reverse order of removal.
6. Do the battery terminal reconnection procedure (see page 22-89).

Component Location Index

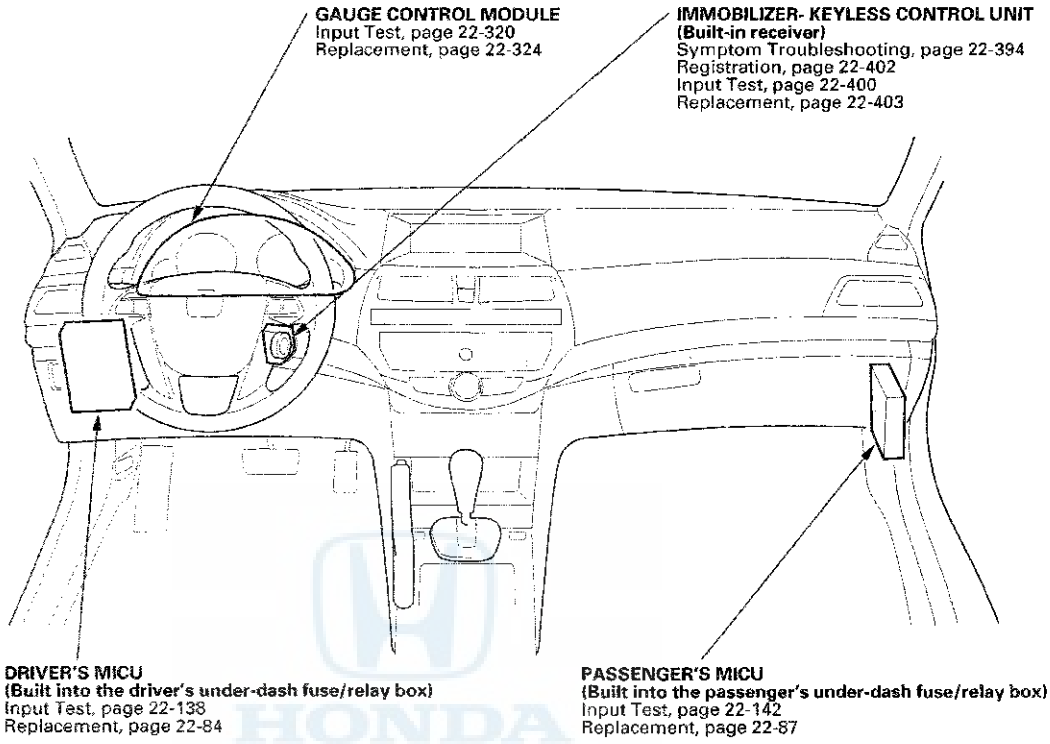

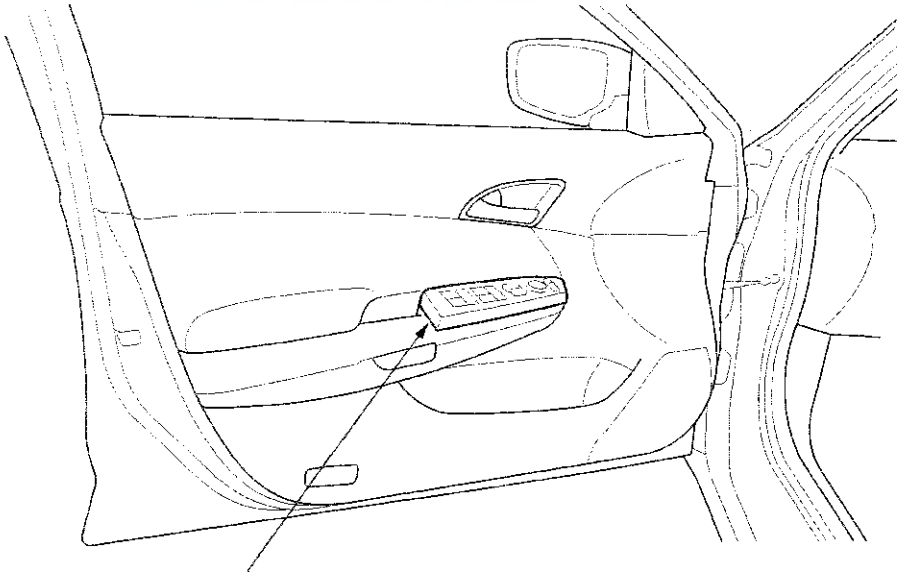

General Troubleshooting Information

Troubleshooting CAN Circuit Related Problems

NOTE: Check the ECM/PCM for DTCs and troubleshoot ECM/PCM (see page 11-3) or F-CAN loss of communication errors first.

Using the HDS (Preferred method)

1. Go to B-CAN System Diagnosis Test Mode A to check for "Connected units" and DTCs (see page 22-120).
2. If no DTCs are retrieved, go to B-CAN System Diagnosis Test Mode C (see page 22-123) or D (see page 22-124).

Using the B-CAN System Diagnosis Test Mode 1 (Use only if the HDS is unavailable)

1. Check for communication circuit problems using B-CAN System Diagnostic Test Mode 1 (see page 22-125).
2. Check for DTCs.
3. Sort, and then troubleshoot the DTCs in this order.

   -1 Battery voltage DTCs
   -2 Internal error DTCs
   -3 Loss of communication DTCs
      NOTE: If the DTC U1280 is stored, troubleshoot DTC U1280 first.
   -4 Signal error DTCs

4. If no DTCs are retrieved, use B-CAN System Diagnostic Test Mode 2 to check all inputs related to the failure (see page 22-125).

How to display DTCs on the gauge control module

Enter the B-CAN System Diagnosis Test Mode 1 (see page 22-125). While in Test Mode 1, the DTCs which have been detected and stored individually by various B-CAN (Body-controller Area Network) units, will be shown one by one on the LCD display when the communication between the MICU and the gauge control module is normal. To scroll through the DTCs, press the select/reset button.

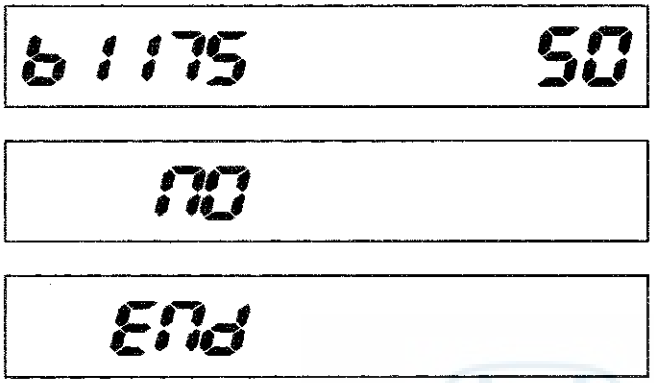

DTC detected (the lower four digits are a decimal number representing the DTC)

No DTCs detected

All DTCs have been displayed

The unit that has stored the code can be identified by the number shown on the odometer display.

Control Unit	Control Unit I.D. Number
Driver's MICU	13
Passenger's MICU	14
Door multiplex control unit	30
Gauge control module	50
Climate control unit	51
HandsFreeLink control unit	94
Immobilizer-keyless control unit	96

How to clear the DTC

Enter the B-CAN System Diagnosis Test Mode 1 (see page 22-125). While in Test Mode 1, press and hold down the SELECT/RESET button for more than 10 seconds.

(cont'd)

General Troubleshooting Information (cont'd)

Loss of Communication DTC cross-reference chart

When an ECU is unable to communicate with the other ECUs on the CAN circuit, the other control units will set loss of communication DTCs. Use this chart to find the control unit that is not communicating.

1. Find the Transmitting Control Unit that is in the same row as all of the loss of communication DTCs retrieved.
2. Do the input test for the transmitting control unit.

BUS OFF and Internal Error Codes

DTC type	Related Unit						
	Driver's MICU	Passenger's MICU	Gauge Control Module	Door Multiplex Control Unit	Immobilizer-Keyless Control Unit	Climate Control Unit	HandsFreeLink Control Unit
BUS OFF	U1280	U1280	U1280	U1280	U1280	U1280	U1280
ECU (EEPROM) Error	B10A2	B11A2	B1152				

Loss of Communication

Transmitting Control Unit	Receiving Unit/Loss of Communication DTC					
	Driver's MICU	Passenger's MICU	Gauge Control Module	Door Multiplex Control Unit	Immobilizer-Keyless Control Unit	Climate Control Unit
Driver's MICU	TX	U1282	U1282	U1282	U1282	
Passenger's MICU	U1283	TX	U1283	U1283		
Gauge Control Module	U0155	U0155	TX	U0155	U0155	U0155
Door Multiplex Control Unit	U0199			TX	U0199	
Climate Control Unit				U0164		
ECM/PCM			U0100			
SRS Unit			U0151			
VSA Modulator-Control Unit			U0122			
TPMS Control Unit			U0127			

TX: Transmitting unit does not set a loss communication DTC.

DTC Troubleshooting Index

NOTE: Record all DTCs, and sort them by DTC type using the DTC troubleshooting index, then troubleshoot the DTC(s) in this order:

- Battery voltage DTCs
- Internal error DTCs
- Loss of communication DTCs
- Signal error DTCs

Driver's MICU

DTC	Description	DTC Type	Page
B10A2	Driver's MICU (EEPROM) error	Internal error	(see page 22-130)
B10CF	Left daytime running lights circuit malfunction	Signal error	(see page 22-194)
B1036	Driver's MICU IG1 line input error	Signal error	(see page 22-131)
B1077	Wiper (As) signal error	Signal error	(see page 22-282)
B1275	Combination light switch OFF position circuit malfunction	Signal error	(see page 22-198)
B1276	Combination light switch parking (SMALL) position circuit malfunction	Signal error	(see page 22-198)
B1277	Combination light switch AUTO position circuit malfunction	Signal error	(see page 22-198)
B1278	Combination light switch ON position circuit malfunction	Signal error	(see page 22-198)
B1279	Headlight switch DIMMER position circuit malfunction	Signal error	(see page 22-200)
B1280	Turn signal switch circuit malfunction	Signal error	(see page 22-220)
B1281	Wiper switch MIST position circuit malfunction	Signal error	(see page 22-284)
B1282	Wiper switch INT (AUTO) position circuit malfunction	Signal error	(see page 22-284)
B1283	Wiper switch LOW position circuit malfunction	Signal error	(see page 22-284)
B1284	Wiper switch HIGH position circuit malfunction	Signal error	(see page 22-284)
U0155	Driver's MICU lost communication with gauge control module	Loss of communication	(see page 22-133)
U0199	Driver's MICU lost communication with door multiplex control unit	Loss of communication	(see page 22-134)
U1280	Communication bus line error (BUS-OFF)	Loss of communication	(see page 22-135)
U1283	Driver's MICU lost communication with passenger's MICU	Loss of communication	(see page 22-137)

Passenger's MICU

DTC	Description	DTC Type	Page
B11A2	Passenger's MICU (EEPROM) error	Internal error	(see page 22-130)
B11C7	Passenger's MICU IG1 line input error	Signal error	(see page 22-132)
B11CF	Right daytime running lights circuit malfunction	Signal error	(see page 22-196)
B1575	Automatic lighting sensor circuit malfunction	Signal error	(see page 22-202)
U0155	Passenger's MICU lost communication with gauge control module	Loss of communication	(see page 22-133)
U1280	Communication bus line error (BUS-OFF)	Loss of communication	(see page 22-135)
U1282	Passenger's MICU lost communication with driver's MICU	Loss of communication	(see page 22-137)

Immobilizer-Keyless Control Unit

DTC	Description	DTC Type	Page
U0155	Immobilizer-keyless control unit lost communication with gauge control module	Loss of communication	(see page 22-390)
U0199	Immobilizer-keyless control unit lost communication with door multiplex control unit	Loss of communication	(see page 22-390)
U1280	Communication bus line error (BUS-OFF)	Loss of communication	(see page 22-135)
U1282	Immobilizer-keyless control unit lost communication with driver's MICU	Loss of communication	(see page 22-391)

(cont'd)

DTC Troubleshooting Index (cont'd)

Door Multiplex Control Unit

DTC	Description	DTC Type	Page
B1125	Driver's power window motor pulse A error	Signal error	(see page 22-255)
B1126	Driver's power window motor pulse B error	Signal error	(see page 22-255)
B1127	Driver's door key cylinder switch signal error (LOCK/UNLOCK)	Signal error	(see page 22-154)
B1128	Driver's door lock switch signal error (LOCK/UNLOCK)	Signal error	(see page 22-155)
B1129	Driver's door lock knob switch signal error (LOCK/UNLOCK)	Signal error	(see page 22-156)
B1130	Front passenger's power window motor pulse A error	Signal error	(see page 22-256)
B1131	Front passenger's power window motor pulse B error	Signal error	(see page 22-256)
B1140	Driver's power window position information error	Signal error	(see page 22-258)
B1142	Communication line (UART line) communication error	Signal error	(see page 22-258)
B1145	Front passenger's power window position information error	Signal error	(see page 22-259)
U0155	Door multiplex control unit lost communication with gauge control module	Loss of communication	(see page 22-260)
U0164	Door multiplex control unit lost communication with climate control unit	Loss of communication	(see page 22-260)
U1280	Communication bus line error (BUS-OFF)	Loss of communication	(see page 22-135)
U1282	Door multiplex control unit lost communication with driver's MICU	Loss of communication	(see page 22-261)
U1283	Door multiplex control unit lost communication with passenger's MICU	Loss of communication	(see page 22-261)

Gauge Control Module

DTC	Description	DTC Type	Page
B1152	Gauge control module (EEPROM) error	Internal error	(see page 22-312)
B1175	Fuel level sensor (Fuel gauge sending unit) circuit open	Signal error	(see page 22-312)
B1176	Fuel level sensor (Fuel gauge sending unit) circuit short	Signal error	(see page 22-313)
U0029	F-CAN communication line error (BUS-OFF)	Loss of communication	(see page 22-314)
U0100	Gauge control module lost communication with ECM/PCM	Loss of communication	(see page 22-315)
U0122	Gauge control module lost communication with VSA modulator-control unit	Loss of communication	(see page 22-316)
U0127	Gauge control module lost communication with TPMS control unit	Loss of communication	(see page 22-317)
U0151	Gauge control module lost communication with SRS unit	Loss of communication	(see page 22-318)
U1280	Communication bus line error (BUS-OFF)	Loss of communication	(see page 22-135)
U1282	Gauge control module lost communication with driver's MICU	Loss of communication	(see page 22-319)
U1283	Gauge control module lost communication with passenger's MICU	Loss of communication	(see page 22-319)

HandsFreeLink Control Unit

DTC	Description	DTC Type	Page
B1775	Microphone input/output short to power/open	Signal error	(see page 23-270)
B1776	Microphone input/output short to ground/open	Signal error	(see page 23-271)
B1779	HFL-voice control switch (HFL TALK/HFL BACK buttons) circuit open/short	Signal error	(see page 23-273)
B1780	HFL-voice control switch (HFL TALK/HFL BACK buttons) circuit short	Signal error	(see page 23-275)
B1792	HandsFreeLink control unit internal error	Signal error	(see page 23-276)
U1280	Communication bus line error (BUS-OFF)	Loss of communication	(see page 22-135)

Climate Control Unit

DTC	Description	DTC Type	Page
B121A	An open in the mode control motor circuit	Signal error	(see page 21-125)
B121B	A short in the mode control motor circuit	Signal error	(see page 21-127)
B1220	A short in the recirculation control motor circuit	Signal error	(see page 21-130)
B1225	An open in the in-car temperature circuit	Signal error	(see page 21-134)
B1226	A short in the in-car temperature sensor circuit	Signal error	(see page 21-135)
B1227	An open in the outside air temperature sensor circuit	Signal error	(see page 21-137)
B1228	A short in the outside air temperature sensor circuit	Signal error	(see page 21-138)
B1229	An open in the sunlight sensor circuit	Signal error	(see page 21-139)
B1230	A short in the sunlight sensor circuit	Signal error	(see page 21-141)
B1231	An open in the evaporator temperature sensor circuit	Signal error	(see page 21-142)
B1232	A short in the evaporator temperature sensor circuit	Signal error	(see page 21-144)
B1233	An open in the driver's air mix control motor circuit	Signal error	(see page 21-145)
B1234	A short in the driver's air mix control motor circuit	Signal error	(see page 21-146)
B1235	A problem in the driver's air mix control linkage, door, motor or motor circuit	Signal error	(see page 21-149)
B1236	An open in the passenger's air mix control motor circuit	Signal error	(see page 21-150)
B1237	A short in the passenger's air mix control motor circuit	Signal error	(see page 21-152)
B1238	A problem in the passenger's air mix control linkage, door, motor or motor circuit	Signal error	(see page 21-155)
B1241	A problem in the blower motor circuit	Signal error	(see page 21-157)
B2983	A problem in the recirculation control linkage, door, motor, or motor circuit	Signal error	(see page 21-161)
B2986	An open in the recirculation control motor circuit	Signal error	(see page 21-162)
U0155	Climate control unit lost communication with gauge control module	Loss of communication	(see page 21-124)
U1280	Communication bus line error (BUS-OFF)	Loss of communication	(see page 22-135)

System Description

MICU Control Functions Index

The driver's MICU (built into the under-dash fuse/relay box) is one of the B-CAN components. The driver's MICU controls many systems related to the body controller area network and the security system, and also works as a gateway to diagnose the other B-CAN connected ECUs with the HDS.
Refer to each system circuit diagram for details.

System	Function
Multiplex Control	Sends switch input/output signal information to the driver's MICU. The driver's MICU controls the ECU's electric load and communication based upon the information received via the B-CAN.
On-Board Diagnosis	The driver's MICU has a gateway function which sends the results of the driver's MICU internal diagnosis and the B-CAN connected ECU's diagnosis to the HDS.
Self-Diagnosis	Test mode 1 diagnoses the communication line between the driver's MICU and B-CAN connected units. Test mode 2 checks the switch inputs connected to the driver's MICU.
Interior Light(s)	The driver's MICU controls the interior lights ON, OFF and dimming based upon the information of the related switches and/or the B-CAN related information.
Sleep Function	The driver's MICU has a sleep function, which it enters during the power down mode.

The driver's MICU also controls the function of these circuits:

- Entry lights (front individual map lights and ceiling light)
- Exterior lights (including the daytime running lights, and auto-headlights off)
- Horns
- Interlock system
- Keyless entry
- Power door locks
- Power window key-off timer
- Security alarm
- Turn signal/hazard warning lights
- Wiper/washer

Body Controller Area Network (B-CAN) and Fast Controller Area Network (F-CAN)

The body controller area network (B-CAN) and the fast controller area network (F-CAN) share information between multiple electronic control units (ECUs). B-CAN communication moves at a slower speed (125 kbps) for convenience related items and for other functions. F-CAN information moves at a faster speed (500 kbps) for "real time" functions such as fuel and emissions data. To allow both systems to share information, the gauge control module translates information from B-CAN to F-CAN and from F-CAN to B-CAN.

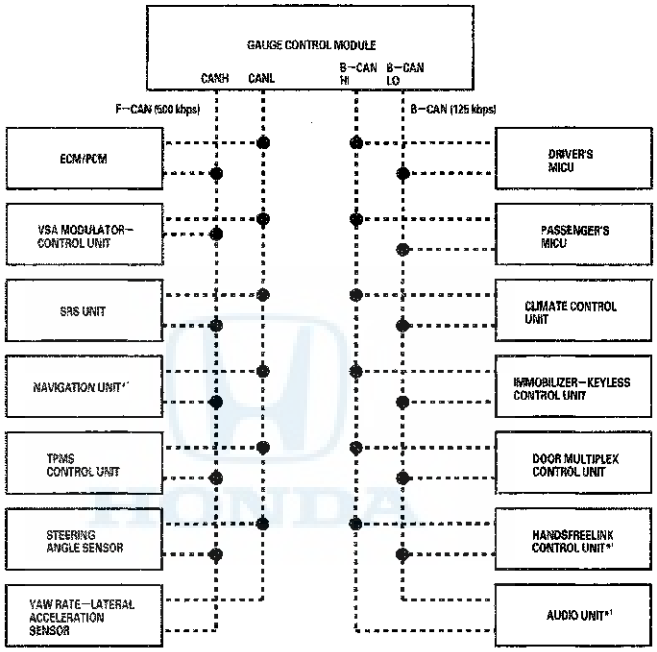

*1 : With navigation system
*2 : With premium audio system

(cont'd)

System Description (cont'd)

Gateway Function

The gauge control module acts as a gateway to allow both systems to share information. The gauge control module translates information from B-CAN to F-CAN and from F-CAN to B-CAN.

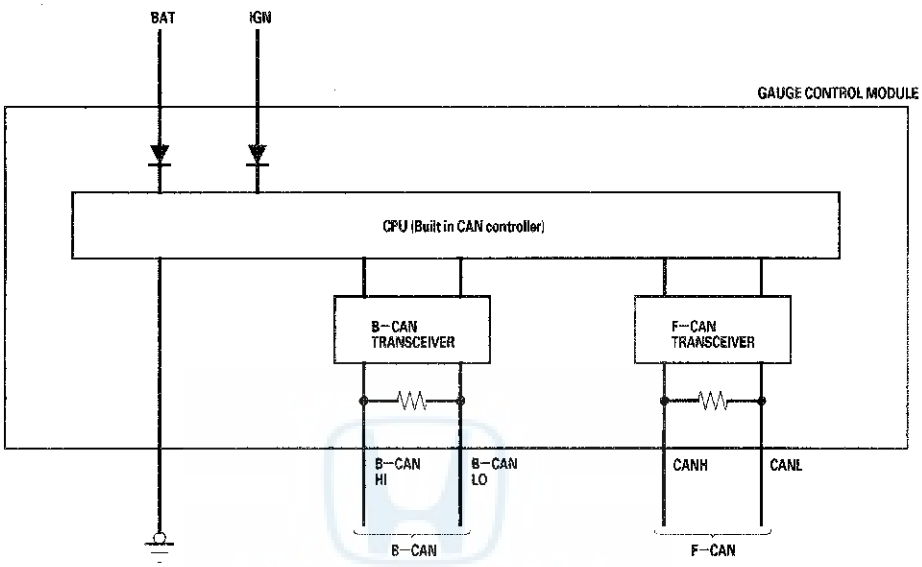

Network "Loss of Communication" Error Checking Function

The ECUs on the CAN circuit send messages to each other. If there are any communication malfunctions on the network, the LCD display on the gauge control module can indicate the error messages by entering the gauge control module self-diagnostic function (see page 22-304).

Self-diagnostic Function (On-board diagnosis)

By connecting the HDS to the data link connector (DLC), the HDS can retrieve the diagnostic information from the driver's MICU via a diagnostic line called K-LINE. The K-LINE is separated from the CAN lines, and connected to the CAN related ECUs. The driver's MICU is a gateway between the HDS and B-CAN related ECUs, and sends B-CAN diagnostic information to the HDS. When doing a function test with the HDS, the HDS sends an output signal through the K-LINE to the driver's MICU. The driver's MICU either relays the request to another ECU, or commands the function itself.

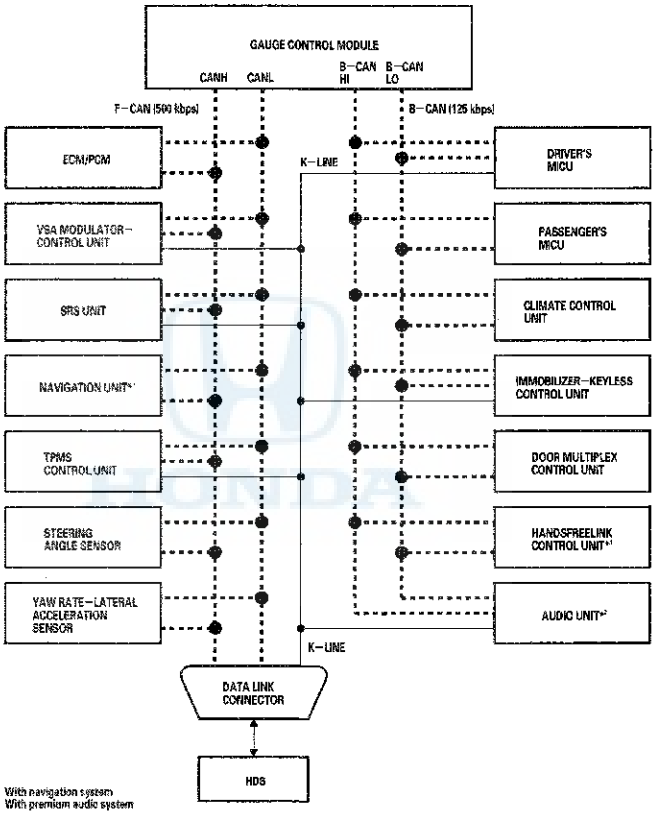

*1 : With navigation system
*2 : With premium audio system

(cont'd)

System Description (cont'd)

Wake-up and Sleep Function

The multiplex integrated control system has "wake-up" and "sleep" functions to decrease parasitic draw on the battery when the ignition switch is to LOCK (0).

- In the sleep mode, the multiplex integrated control system stops functioning (communication and CPU control) when it is not necessary for the system to operate.
- As soon as any operation is requested (for example, a door is unlocked), the related control units in the sleep mode immediately wake up and begin to function.
- When the ignition switch is turned to LOCK (0), and the driver's door is opened, then closed, there is a delay about 40 seconds before the control unit goes from the wake-up mode to the sleep mode.
- The sleep mode will not function if any door is opened or if a key is in the ignition.
- The draw is reduced from about 200 mA to less than 35 mA when in the sleep mode.

NOTE: Sleep and Wake-up Mode Test (see page 22-127).

Fail-safe Function

To prevent improper operation, the MICUs have a fail-safe function. In the fail-safe mode, the output signal is fixed when any part of the system malfunctions (for example, a faulty control unit or communication line).
Each control unit has a hardware fail-safe function that fixes the output signal when there is a CPU malfunction, and a software fail-safe function that ignores the signal from a malfunctioning control unit , which allows the system to operate normally.

Hardware Fail-safe Control

Fail-safe function
When a CPU problem or a abnormal power supply voltage is detected, the MICUs move to the hardware fail-safe mode, and each system output load is set to the pre-programmed fail-safe value.

Software Fail-safe Control

When any of the data from the B-CAN circuit cannot be received within a specified time, or an unusual combination of the data is recognized, the MICUs move to the software fail-safe mode. The data that cannot be received is forced to a pre-programmed value.

Driver's MICU

Power Supply Voltage Monitoring Function

The driver's MICU monitors the power supply voltage (back-up voltage). If the voltage goes below 10 V, the driver's MICU will not store a DTC.

	Input	Output
Driver's MICU	Battery voltage (VBU)	
B-CAN		MICU (Under 10 V) message

Entry Lights Control System (Ceiling Lights, Map Lights, Ignition Key Light)

The driver's MICU control of the ceiling light ON/OFF is based on input signals from each switch.

	Input	Output
Driver's MICU	IG1 power supply Ignition key switch Driver's door switch Left rear door switch	Interior lights Ignition key light
B-CAN	Keyless LOCK/UNLOCK signal Right rear door switch Driver's door lock knob switch (LOCK) Front passenger's door switch	

Collision Detection Signal (CDS)

The driver's MICU control of the door lock actuators is based on IG1 and the SRS (CDS) signals.

	Input	Output
Driver's MICU	IG1 power supply	Door lock actuators (UNLOCK)
B-CAN	CDS signal	Door lock actuators (UNLOCK)

Key Interlock (A/T)

The driver's MICU control of the key interlock solenoid is based on ignition switch ACCESSORY (I) position, the transmission range switch P position, and the park-pin switch signals.

	Input	Output
Driver's MICU	Ignition switch (I) Transmission range switch (P) position Park-pin switch	Key interlock solenoid

Rear Window Defogger Timer Operation (With Climate Control)

The driver's MICU control of the rear window defogger timer is based on ignition switch and the rear window defogger switch signals.

	Input	Output
Driver's MICU	Ignition switch (IG1)	Rear window defogger relay
B-CAN	Rear window defogger switch	MICU (rear window defogger) message

Rear Window Defogger Timer Operation (With HVAC Control)

The driver's MICU control of the rear window defogger timer is based on the ignition switch and the rear window defogger switch signals.

	Input	Output
Driver's MICU	Rear window defogger switch Ignition switch (IG1)	Rear window defogger relay
B-CAN		MICU (Rear window defogger) message

(cont'd)

System Description (cont'd)

Combination Light Switch

The driver's MICU control of the lighting system is based on input signals from each combination light switch.

	Input	Output
Driver's MICU	Combination light switch (OFF) Combination light switch (ON) Combination light switch (PARKING) Combination light switch (PASSING) Combination light switch (DIMMER)	Parking light Headlight (high beam, low beam passing) Taillights Headlight (Back-up) to passenger's MICU
B-CAN		Parking light Headlight (high beam, low beam passing)

Daytime Running Lights

The driver's MICU control of the headlights as daytime running lights is based on input signals from each switch.

	Input	Output
Driver's MICU	IG2 power supply	Headlight (high beam)
B-CAN	Parking brake signal Transmission range switch P signal IG1 meter signal	Headlight (high beam) DRL message

Headlight Auto-OFF Function

The driver's MICU control of the lighting system is based on input signals from each switch.

	Input	Output
Driver's MICU	IG1 power supply Ignition key switch Driver's door switch	Parking light Headlight (high beam, low beam) Taillights
B-CAN	Driver's door lock knob switch	Parking light Headlight (high beam, low beam)

Turn Signal/Hazard Warning Lights

The driver's MICU control of the turn signal/hazard warning lights is based on input signals from the turn signal switch and the hazard warning switch.

	Input	Output
Driver's MICU	IG1 power supply Turn signal switch (left) Turn signal switch (right) Hazard warning switch	Turn signal lights (left) Turn signal lights (right)
B-CAN	Turn signal switch (left) Turn signal switch (right)	HAZARDSW message TURNLRLY message TURNRRLY message TURNRSW message TURNLSW message

Courtesy Light

The driver's MICU control of the driver's and left rear door courtesy lights is based on input signal from the driver's and left rear door switches.

	Input	Output
Driver's MICU	Driver's door switch	Driver's door courtesy light
	Left rear door switch	Left rear door courtesy light

Wiper

The driver's MICU control of the wiper is based on input signals from each switch.

	Input	Output
Driver's MICU	IG1 power supply Brake pedal position switch Transmission range switch P position (A/T) Wiper switch (INT & LO) Wiper switch (HI & LO) Wiper switch (MIST) Wiper switch (As) Wiper switch intermittent dwell time controller	Wiper intermittent relay Wiper motor high relay
B-CAN	Parking brake signal (A/T) IG1 meter signal (A/T) Washer signal	WIPSW messages

Power Window Relay

The driver's MICU control of the power windows is based on input signals from each switch.

	Input	Output
Driver's MICU	IG1 power supply Driver's door switch Left rear door switch	Power window relay (rear)
B-CAN	Power window relay signal Power window timer signal Front passenger's door switch Right rear door switch	

Keyless Answer Back

The driver's MICU control of the lighting system and horns is based on keyless signals sent by B-CAN.

	Input	Output
Driver's MICU	IG1 power supply	Parking light Taillights Horns
B-CAN	KEYLESS DOOR LOCK signal ANSWER BACK DISABLE signal	Parking light

Security Answer Back

The driver's MICU control of the lighting system and horns is based on keyless signals sent by B-CAN.

	Input	Output
Driver's MICU		Parking light Taillights Horns
B-CAN	KEYLESS DOOR LOCK signal ANSWER BACK DISABLE signal	Parking light Answer back buzzer message

Answer Back Response Operation

The driver's MICU control of the lighting system and horns is based on keyless signals sent by B-CAN.

	Input	Output
Driver's MICU		Parking light Taillights Horns
B-CAN	ANSWER BACK signal	Parking light

(cont'd)

System Description (cont'd)

Power Door Locks

The driver's MICU control of the door lock actuators is based on input signals of each switch.

	Input	Output
Driver's MICU	IG1 power supply Ignition key switch Driver's door switch Left rear door switch Trunk lid latch switch (2-door)	Driver's door lock actuator (UNLOCK) Door lock actuators (LOCK) Door lock actuators (UNLOCK) Trunk lid release actuator
B-CAN	Driver's door lock switch (LOCK/UNLOCK) Driver's door key cylinder switch (LOCK/UNLOCK) Driver's door lock knob switch (LOCK) Front passenger's door lock switch (LOCK/UNLOCK) Front passenger's door switch Right rear door switch	Door lock signal (LOCK) Door lock signal (UNLOCK)

Door Lock Response Operation

The driver's MICU control of the door lock actuators LOCK, UNLOCK, DRIVER'S UNLOCK, TRUNK UNLOCK is based on B-CAN door lock switch signals.

	Input	Output
Driver's MICU		Driver's door lock actuator (UNLOCK) Door lock actuators (LOCK) Door lock actuators (UNLOCK) Trunk lid release actuator
B-CAN	Door lock signals	

Keyless Entry System

The driver's MICU control of the door lock actuators is based on input signals of each switch.

	Input	Output
Driver's MICU	IG1 power supply Ignition key switch Driver's door switch Left rear door switch Trunk lid latch switch	Driver's door lock actuator (UNLOCK) Door lock actuators (LOCK) Door lock actuators (UNLOCK) Trunk lid release actuator
B-CAN	Front passenger's door switch Right rear door switch Driver's door lock knob switch (LOCK) Driver's door lock switch (LOCK/UNLOCK) Driver's door key cylinder switch (LOCK/UNLOCK) Front passenger's door lock switch (LOCK/UNLOCK) Keyless LOCK/UNLOCK signal	Door lock signal (LOCK) Door lock signal (UNLOCK) Relock signal

Keyless PANIC Operation

The driver's MICU control of the keyless PANIC operation is based on B-CAN signals.

	Input	Output
Driver's MICU		Headlight (low beam) Parking light Taillights Horns
B-CAN	PANIC signals	Headlight (low beam) Parking light

Auto Power Door Locks (LOCK operation)

The driver's MICU control of the door lock actuators is based on input signals from each switch.

	Input	Output
Driver's MICU	IG1 power supply Transmission range switch (P position) Driver's door switch Left rear door switch Trunk lid latch switch Left rear door lock knob switch (LOCK)	Door lock actuators (LOCK)
B-CAN	Front passenger's door switch Right rear door switch Driver's door lock knob switch (LOCK) Front passenger's door lock knob switch (LOCK) Right rear door lock knob switch (LOCK) Vehicle speed pulse signal Engine speed signal	Door lock actuators (LOCK)

Auto Power Door Locks (UNLOCK operation)

The driver's MICU control of the door lock actuators is based on input signals from each switch.

	Input	Output
Driver's MICU	IG1 power supply Transmission range switch (P position) Driver's door switch Left rear door switch Trunk lid latch switch Brake pedal position switch Left rear door lock knob switch (UNLOCK)	Driver's door lock actuators (UNLOCK) Door lock actuators (UNLOCK)
B-CAN	Front passenger's door switch Right rear door switch Driver's door lock knob switch (UNLOCK) Front passenger's door lock knob switch (UNLOCK) Right rear door lock knob switch (UNLOCK)	Door lock actuators (UNLOCK)

Security Alarm System

The driver's MICU control of the lighting system and horns is based on input signals of each switch and the B-CAN signals.

	Input	Output
Driver's MICU	IG1 power supply Ignition key switch Driver's door switch Left rear door switch Trunk lid latch switch Left rear door lock knob switch (UNLOCK) Hood switch	Headlights (low beam) Parking light Taillights Horns
B-CAN	Audio switch Front passenger's door switch Right rear door switch Driver's door key cylinder switch (LOCK/UNLOCK) Driver's door lock knob switch (UNLOCK) Front passenger's door lock switch (LOCK/UNLOCK) Front passenger's door lock knob switch (UNLOCK) Right rear door lock knob switch (UNLOCK) Keyless LOCK/UNLOCK signal	Driver's MICU (SET 1) message Driver's MICU (SET 2) message ALARM (ACTION) message Headlight (low beam) Parking light

(cont'd)

System Description (cont'd)

Passenger's MICU

Power Supply Voltage Monitoring Function

The passenger's MICU monitors the power supply voltage (back-up voltage). If the voltage goes below 10 V, the passenger's MICU will not store DTCs.

	Input	Output
Passenger's MICU	Battery voltage (VBU)	

Courtesy Light (Front passenger's side)

The passenger's MICU control of the front passenger door courtesy light is based on input signals from the front passenger door switch.

	Input	Output
Passenger's MICU	Front passenger's door switch	Front passenger's door courtesy light

Power Door Locks (LOCK)

The passenger's MICU control of the front passenger's side door lock actuators is based on input signals from the driver's MICU.

	Input	Output
Passenger's MICU		Door lock actuators (LOCK)
B-CAN	Door lock (LOCK) signal	

Power Door Locks (UNLOCK)

The passenger's MICU control of the front passenger's side door lock actuators is based on input signals from the driver's MICU.

	Input	Output
Passenger's MICU		Door lock actuators (UNLOCK)
B-CAN	Door lock (UNLOCK) signal	

Exterior Lights

The passenger's MICU control of the front passenger's side headlight, and parking lights is based on input signals from the driver's MICU.

	Input	Output
Passenger's MICU		Parking light Headlight (high beam, low beam passing)
B-CAN	Position light signal Headlight (high beam, low beam passing) signal	

Automatic Lighting

The passenger's MICU control of the headlights and the parking lights is based on input signals from the automatic lighting sensor.

	Input	Output
Passenger's MICU	IG1 power supply Automatic lighting sensor (SIO) signal	Headlight back-up signal
B-CAN	MICU (ignition key switch) signal MICU (IG1) signal Lighting switch signal Vehicle speed signal	AUTOLT signal

Washer Operation

The passenger's MICU control of the washer motor is based on input signals from the wiper switch.

	Input	Output
Passenger's MICU	IG1 power supply	Washer motor
B-CAN	Wiper switch signal	Washer signal

Keyless Buzzer Operation

The passenger's MICU control of the keyless buzzer is based on input from the answer back signals.

	Input	Output
Passenger's MICU		Keyless buzzer
B-CAN	Answer back signals	

Power Window Relay Circuit

The passenger's MICU control of the power window relay circuit in the passenger's under-dash fuse/relay box is based on input signals from the power window switches.

	Input	Output
Passenger's MICU	IG1 power supply	Power window relay circuit
B-CAN	Power window signals	

(cont'd)

System Description (cont'd)

HDS Inputs and Commands

Certain inputs happen so quickly that the HDS cannot update fast enough. Hold the switch that is being tested while monitoring the Data List. This should give the HDS time to update the signal on the Data List.
Because the HDS software is updated to support the release for newer vehicles it is not uncommon to see system function tests that are not supported.
Make sure that the most current software is loaded.

Input:

System Menu	Data List	Data List Indication
Gauges	Vehicle Speed Input Signal	OFF/ON
	Cruise Control Main Switch (ACC switch)	OFF/ON
	Cruise Control Set Switch	OFF/ON
	Cruise Control Resume Switch	OFF/ON
	Washer Fluid Level Switch	OFF/ON
	VSA/TCS Off Switch	OFF/ON
	Gauge Select/Reset Switch	OFF/ON
	Parking Brake Switch	OFF/ON
	Brake Fluid Level Switch	OFF/ON
	Fuel Sending Unit Input 1	deg
	Fuel Sending Unit Input 2	V
	VSA/TCS Active Indicator	OFF/ON
	VSA/TCS Indicator (Warning)	OFF/ON
	ABS Indicator	OFF/ON
	EBD Indicator (Electronic Brake Distribution)	OFF/ON
	Cruise Control Main Switch Indicator	OFF/ON
	MIL Indicator	OFF/ON
	Washer Fluid Level Indicator (Canada)	OFF/ON
	DRL Indicator	OFF/ON
	Low Oil Pressure Indicator	OFF/ON
	Charging System Indicator	OFF/ON
	Cruise Main Switch Lamp	OFF/ON
	Maintenance Required Indicator	OFF/ON
	Maintenance Minder Indicator	OFF/ON
	High Beam Indicator	OFF/ON
	Parking Light ON Indicator	OFF/ON
	Low Fuel Warning Indicator	OFF/ON
	Security Indicator	OFF/ON
	Fog Light Indicator	OFF/ON
	Auto-light Trouble Lamp	OFF/ON
	Seatbelt Indicator	OFF/ON
	Low Tire Pressure Indicator	OFF/ON
	TPMS Indicator	OFF/ON
	Speed Indicator (km/h) Command	km/h
	Speed Indicator (mph) Command	mile/h
	Driver's Seat Belt Buckle Switch	OFF/ON
	A/T Gear Position Switch (R)	OFF/ON
	A/T Gear Position Switch (P)	OFF/ON

HDS Inputs and Commands

Input:

System Menu	Data List	Data List Indication
Lighting	Passing Input Signal	OFF/ON
	Headlight ON Input Signal	OFF/ON
	Driver's Door Switch	OFF/ON
	Hazard Switch	OFF/ON
	Headlight Switch (OFF)	OFF/ON
	Headlight Switch (PARKING)	OFF/ON
	Headlight Switch (HEADLIGHT)	OFF/ON
	Headlight Switch (AUTO)	OFF/ON
	Headlight Switch (High Beam)	OFF/ON
	Headlight Switch (PASSING)	OFF/ON
	Turn Signal Switch (LEFT)	OFF/ON
	Turn Signal Switch (RIGHT)	OFF/ON
	Fog Light Switch	OFF/ON
	Interior Light Command	OFF/ON
	Left Turn Signal Command	OFF/ON
	Right Turn Signal Command	OFF/ON
	DR Courtesy Light Output	OFF/ON
	Headlight Command	OFF/ON
	Headlight High Beam Command	OFF/ON
	Parking Light Command	OFF/ON
	DRL Command	OFF/ON
	Autolight Sensor Input Voltage	V
	Autolight Sensor Malfunction Detection Voltage Max	V
	Autolight Sensor Malfunction Detection Voltage Min	V
	Autolight Small Command	OFF/ON
	Autolight Headlight Command	OFF/ON
	Autolight Warning Command	OFF/ON
	Autolight Headlight Backup Line Command	OFF/ON
	AS Courtesy Light Output	OFF/ON

(cont'd)

System Description (cont'd)

HDS Inputs and Commands

Input:

System Menu	Data List	Data List Indication
Door	Driver's Door Key Cylinder Switch (LOCK)	OFF/ON
	Driver's Door Key Cylinder Switch (UNLOCK)	OFF/ON
	Driver's Door Lock Switch (LOCK)	OFF/ON
	Driver's Door Lock Switch (UNLOCK)	OFF/ON
	Driver's Door Lock Knob Switch (LOCK)	OFF/ON
	Driver's Door Lock Knob Switch (UNLOCK)	OFF/ON
	Driver's Door Switch	OFF/ON
	Driver's Rear Door Switch	OFF/ON
	Driver's Rear Door Lock Knob Switch (UNLOCK)	OFF/ON
	Door LOCK Command	OFF/ON
	Door UNLOCK Command	OFF/ON
	Driver's Door UNLOCK Command	OFF/ON
	Front Passenger's Door Switch	OFF/ON
	Passenger's Rear Door Switch	OFF/ON
	Passenger's Rear Door Lock Knob Sw. (UNLOCK)	OFF/ON
Keyless	Driver's Door Key Cylinder Switch (LOCK)	OFF/ON
	Driver's Door Key Cylinder Switch (UNLOCK)	OFF/ON
	Driver's Door Lock Switch (LOCK)	OFF/ON
	Driver's Door Lock Switch (UNLOCK)	OFF/ON
	Driver's Door Lock Knob Switch (LOCK)	OFF/ON
	Driver's Door Lock Knob Switch (UNLOCK)	OFF/ON
	Driver's Door Switch	OFF/ON
	Driver's Rear Door Switch	OFF/ON
	Trunk Lid/Tailgate Switch	OFF/ON
	Driver's Rear Door Lock Knob Switch (UNLOCK)	OFF/ON
	Door LOCK Command	OFF/ON
	Door UNLOCK Command	OFF/ON
	Driver's Door UNLOCK Command	OFF/ON
	Trunk Lid Release Command	OFF/ON
	Front Passenger's Door Switch	OFF/ON
	Passenger's Rear Door Switch	OFF/ON
	Passenger's Rear Door Lock Knob Sw. (UNLOCK)	OFF/ON
Power windows	P/W Main Switch	OFF/ON
	P/W Master Switch (Driver's Window AUTO)	OFF/ON
	P/W Master Switch (Driver's Window UP)	OFF/ON
	P/W Master Switch (Driver's Window DOWN)	OFF/ON
	P/W Master Sw. (Front Passenger's Wndw UP)	OFF/ON
	P/W Master Sw. (Front Passenger's Wndw DOWN)	OFF/ON
	P/W Master Switch (Left Rear Window UP)	OFF/ON
	P/W Master Switch (Left Rear Window DOWN)	OFF/ON
	P/W Master Sw. (Right Rear Wndw UP)	OFF/ON
	P/W Master Sw. (Right Rear Wndw DOWN)	OFF/ON
	P/W Master Sw. (Passenger's Wndw AUTO)	OFF/ON
	Driver's P/W Motor Pulse A	NOT EXIST/EXIST
	Driver's P/W Motor Pulse B	NOT EXIST/EXIST
	Driver's P/W Motor Command	OFF/UP/DOWN
	Driver's Door Switch	OFF/ON
	Power Window Timer Output	OFF/ON
	Front Passenger's Door Switch	OFF/ON
	Power Window Timer Output	OFF/ON

System Menu	Data List	Data List Indication
Wipers	Brake Pedal Position Switch	OFF/ON
	Windshield Wiper Switch (LOW)	OFF/ON
	Windshield Wiper Switch (HIGH)	OFF/ON
	Windshield Wiper Switch (MIST)	OFF/ON
	Windshield Wiper Switch (INT)	OFF/ON
	Windshield Washer Switch	OFF/ON
	Windshield Wiper Motor PARK Switch	OFF/ON
	Intermittent Wiper Dwell Timer	0.0--1.0 kΩ/OPEN
	Windshield Wiper Motor HI Command	OFF/ON
	Windshield Wiper Motor LO Command	OFF/ON
	Windshield Washer Motor Command	OFF/ON

HONDA

(cont'd)

System Description (cont'd)

System Menu	Data List	Data List Indication
Security	Driver's Door Key Cylinder Switch (LOCK)	OFF/ON
	Driver's Door Key Cylinder Switch (UNLOCK)	OFF/ON
	Driver's Door Lock Switch (LOCK)	OFF/ON
	Driver's Door Lock Switch (UNLOCK)	OFF/ON
	Driver's Door Lock Knob Switch (LOCK)	OFF/ON
	Driver's Door Lock Knob Switch (UNLOCK)	OFF/ON
	Ignition Key Cylinder Switch	OFF/ON
	Driver's Door Switch	OFF/ON
	Driver's Rear Door Switch	OFF/ON
	Trunk Lid/Tailgate Switch	OFF/ON
	Driver's Rear Door Lock Knob Switch (UNLOCK)	OFF/ON
	Radio Switch	OFF/ON
	Hazard Switch	OFF/ON
	Hood Switch	OFF/ON
	Door LOCK Command	OFF/ON
	Door UNLOCK Command	OFF/ON
	Driver's Door UNLOCK Command	OFF/ON
	Trunk Lid Release Command	OFF/ON
	Headlight Command	OFF/ON
	Headlight High Beam Command	OFF/ON
	Parking Light Command	OFF/ON
	Horn Command	OFF/ON
	Front Passenger's Door Switch	OFF/ON
	Passenger's Rear Door Switch	OFF/ON
	Passenger's Rear Door Lock Knob Sw. (UNLOCK)	OFF/ON
A/C	A/C Pressure Switch/Thermal Protector	OFF/ON
	Rear Window Defogger Input Switch	OFF/ON
	Rear Window Defogger Output	OFF/ON

HONDA

Function Test:

System Menu	HDS Description	Note
A/C	Rear Defroster RLY	Outputs for 60 seconds
	Rear Defogger	Operates the rear window defogger relay for 60 seconds
Door	LOCK All Doors	Outputs LOCK signal 1 time (0.6 sec) to all door
	UNLOCK All Doors	Outputs UNLOCK signal 1 time (0.6 sec) to all door
	UNLOCK Driver's Side Door	Outputs UNLOCK signal 1 time (0.6 sec) to driver side door
Keyless	Trunk Lid/Tailgate Release Command	Unlock trunk
Lighting	Interior Light Command	Illuminates for 30 seconds
	Hazard Flasher (Turn left and right)	Blinks turn signal (left and right) for 15 seconds
	LEFT Turn Signal Command	Blinks for 5 seconds
	RIGHT Turn Signal Command	Blinks for 5 seconds
	Headlight Command	Operates headlight (low) for 15 seconds
	Headlight HIGH Beam Command	Operates headlight (high) for 15 seconds
	Headlight (high) ON for Daytime Running Light	Turns on daytime running light (KA/KC)
	Courtesy Light (DR)	Illuminates for 30 seconds
	Small Light	Operates small lights for 15 seconds
	Rear Fog Light	Illuminates for 30 seconds
	Headlight Backup	Outputs for 15 milliseconds
	Courtesy Light (AS)	Illuminates for 30 seconds
	Parking Light Command	Operates for 15 seconds
	Daytime Running Lights Signal (Canada)	Operates for 15 seconds
	Trunk Light	Illuminates for 30 seconds
P/W	Power Window RLY Rr	Outputs for 30 seconds
	Driver's Window Up	Drives for 3 seconds
	Driver's Window Down	Drives for 3 seconds
	Front Passenger's Window Up	Drives for 3 seconds
	Front Passenger's Window Down	Drives for 3 seconds
	Left Rear Window Up	Drives for 3 seconds
	Left Rear Window Down	Drives for 3 seconds
	Right Rear Window Up	Drives for 3 seconds
	Right Rear Window Down	Drives for 3 seconds
Security	Horn Command	Operates horn for 1 second
Wiper	Windshield Wiper Motor LOW Command	Operates windshield wiper for 5 seconds (low speed)
	Windshield Wiper Motor HIGH Command	Operates windshield wiper for 5 seconds (high speed)
	Windshield Washer Command	Operates windshield washer for 5 seconds
	Windshield Wiper Motor LOW Command	Operates windshield wiper for 5 seconds (low speed)
	Windshield Wiper Motor HIGH Command	Operates windshield wiper for 5 seconds (high speed)
	Windshield Washer Command	Operates windshield washer for 5 seconds

Troubleshooting - B-CAN System Diagnosis Test Mode A

Check the ECM/PCM for DTCs and troubleshoot ECM/PCM (see page 11-3) or F-CAN loss of communication errors first, then do this diagnosis if the symptom is related to the B-CAN system.

NOTE: Always cycle the ignition switch within 3 seconds when prompted in the DTC troubleshooting procedures in this section.

1. Compare the symptom with this list of B-CAN related systems:

   - Gauge control module
   - Exterior lights
   - Turn signals
   - Entry light control
   - Interior lights
   - Safety indicators
   - Horns (security and panic)
   - Chimes (key-in, seat belt, lights-on, and parking brake)
   - Power window/moonroof timer
   - Wiper/washer
   - Security
   - Keyless entry
   - Power door locks
   - Key interlock
   - Dash light brightness
   - Immobilizer

   Is the symptom related to the B-CAN system?

   YES—Go to step 2.

   NO—Go to the system troubleshooting for the system with the symptom. ■

2. Connect the HDS to the data link connector (A), then turn the ignition switch ON (II).

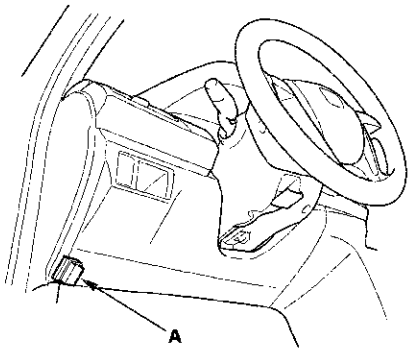

3. From the BODY ELECTRICAL menu, select UNIT INFORMATION, and then select CONNECTED UNIT listed to see if the following control units are communicating with the HDS.

   - Driver's MICU
   - Passenger's MICU
   - Door multiplex control unit
   - Gauge control module
   - Immobilizer-keyless control unit
   - Climate control unit
   - HandsFreeLink control unit USA models (with navigation)
   - Audio unit (with premium audio system)

   NOTE:
   - If a unit is communicating with the HDS, DETECT will be displayed.
   - If a unit is not communicating or the vehicle is not equipped, "Not Available" will be displayed.

   Are all control units communicating with the HDS?

   YES—Go to step 4.

   NO—If any of the control units are not communicating, go to B-CAN System Diagnosis Test Mode B (see page 22-122). If all units are not communicating or only the driver's MICU is communicating, go to DTC U1280 troubleshooting (see page 22-135). ■

4. Select the system that has the problem from the BODY ELECTRICAL menu, then select DTCs.

   Are any DTCs indicated?

   YES—Go to step 5.

   NO—If the problem is related to one of the following items and the system does not stop or turn off, go to B-CAN System Diagnosis Test Mode C (see page 22-123). If the problem is related to one of the following items and the system does not run or turn on, go to B-CAN System Diagnosis Test Mode D (see page 22-124).

   - Exterior lights
   - Turn signals
   - Entry lights
   - Interior lights
   - Horns (security and panic)
   - Wiper/washer

   If the problem is related to one of the following items, go to the troubleshooting for that individual system.■

   - Gauge control module
   - Safety indicators
   - Chimes (key-in, seat belt, lights-on, and parking brake)
   - Security
   - Keyless entry
   - Key interlock
   - Dash light brightness
   - Audio system
   - Navigation (if equipped)

5. Record all DTCs, and sort them by DTC type.

6. Troubleshoot the DTC(s) in this order:

   - Battery voltage DTCs.
   - Internal error DTCs.
   - Loss of communication DTCs.
   - Signal error DTCs.

Troubleshooting - B-CAN System Diagnosis Test Mode B

Do this diagnosis if any of the control units are not communicating (Not Available is displayed in the HDS) as found by the B-CAN System Diagnosis Test Mode A (see page 22-120).

1. Using the HDS, select the system that has the symptom from the BODY ELECTRICAL menu.

2. Select DTCs, and then check for loss of communication DTCs.

   Are any loss of communication DTCs indicated?

   YES—Go to step 3.

   NO—Replace the driver's MICU. ■

3. Do the power, ground, and communication part of the input test for the unit(s) not communicating with the HDS.

Unit not communicating
Driver's MICU (see page 22-138)
Gauge control module (see page 22-320)
Immobilizer-keyless control unit (see page 22-400)
Passenger's MICU (see page 22-142)
Door multiplex control unit (see page 22-262)
Climate control unit (see page 21-164)
Audio unit (see page 23-13)

Troubleshooting - B-CAN System Diagnosis Test Mode C

Do this diagnosis if a component that is controlled by the B-CAN system does not stop or turn off.

NOTE:
- If the component does not turn on, go to B-CAN System Diagnosis Test Mode D (see page 22-124).
- See the B-CAN system unit input/output index for a list of input and output devices and the control units that monitor the input and controls the output devices (see page 22-114).
- Always cycle the ignition switch within 3 seconds when prompted in the DTC troubleshooting procedures in this section.

1. Check for DTCs by selecting the TEST MODE menu from the HDS.

   Are any DTCs indicated?

   YES—Go to B-CAN System Diagnosis Test Mode A (see page 22-120).■

   NO—Go to step 2.

2. Turn off the switch that controls the malfunctioning component.

3. Select DATA LIST from the TEST MODE menu, and check the input of the switch that controls the component.

   Does the HDS indicate the switch is OFF?

   YES—Go to step 4.

   NO—Go to step 6.

4. In the DATA LIST, check the output signal of the malfunctioning component.

   Is the output signal OFF?

   YES—Go to step 5.

   NO—Replace the control unit that controls the device that will not turn OFF.■

5. Check the relay, if applicable, then check for a short in the wire between the relay and the component, the relay and control unit, or the component and control unit.

   Are the relay and the wire harness OK?

   YES—Replace the control unit that controls the component that will not turn OFF.■

   NO—Replace the relay or repair the wire harness.■

6. Check the switch, then check for a short in the wire between the switch and the control unit that monitors the switch.

   Are the switch and wire harness OK?

   YES—Replace the control unit that monitors the switch.■

   NO—Replace the switch or repair the wire harness.■

Troubleshooting - B-CAN System Diagnosis Test Mode D

Do this diagnosis if a component that is controlled by the B-CAN system does not run or come on.

NOTE:
- If the component does not turn off or stop, go to B-CAN System Diagnosis Test Mode C (see page 22-123).
- See the B-CAN system unit input/output index for a list of input and output devices and the control units that monitor the input and controls the output devices (see page 22-114).
- Always cycle the ignition switch within 3 seconds when prompted in the DTC troubleshooting procedures in this section.

1. Check the fuse of the malfunctioning output device.

   Is the fuse OK?

   YES—Go to step 2.

   NO—Replace the fuse and recheck.■

2. Check for DTCs by selecting the TEST MODE menu from the HDS.

   Are any DTCs indicated ?

   YES—Go to B-CAN System Diagnosis Test Mode A (see page 22-120).■

   NO—Go to step 3.

3. Turn ON the switch that controls the malfunctioning component.

4. Select DATA LIST from the TEST MODE menu, and check output signal for the malfunctioning component.

   Is there an output signal?

   YES—Go to step 5.

   NO—Go to step 9.

5. Check the relay and ground, then check for an open or a short in the circuit for the malfunctioning component.

   Are the relay and circuit OK?

   YES—Go to step 6.

   NO—Replace the relay or repair the wire circuit.■

6. Do the function test for the malfunctioning component.

   Does the output device pass the function test?

   YES—Go to step 7.

   NO—Replace the component.■

7. With the malfunctioning output device connected, connect a voltmeter between the malfunctioning output device and body ground on the wire that the control unit uses to control the output device circuit.

8. Select MISC. TEST from the TEST MODE menu, and do the forced operation test of the malfunctioning component.

   Is there a change in voltage (12 V to 0 V or 0 V to 12 V)?

   YES—Inspect the ground for the component. If OK, replace the component.■

   NO—Replace the control unit that controls the malfunctioning component.■

9. Select DATA LIST from the TEST MODE menu, and make sure the switch signal input for the malfunctioning system indicates a change when operated.

   Does the switch input indicated ON when the switch is ON?

   YES—Replace the control unit that controls the malfunctioning component.■

   NO—Go to step 10.

10. Check the switch and its ground (if applicable), then check for an open or a short in the wire between the switch and the control unit that monitors it.

    Are the switch and the wire harness OK?

    YES—Replace the control unit that monitors the switch.■

    NO—Replace the switch or repair the wire harness.■

Troubleshooting - B-CAN System Diagnosis Test Mode 1 and Test Mode 2 (without the HDS)

Special Tools Required
MPCS (MCIC) service connector 07WAZ-001010A

Test Mode 1

Check the ECM/PCM for DTCs and troubleshoot ECM/PCM (see page 11-3) or F-CAN loss of communication errors first, then do this diagnosis if the HDS is not available.

1. Check the No. 15 (10 A) fuse in the under-hood fuse/relay box and No. 5 (7.5 A) fuse in the driver's under-dash fuse/relay box.

   Are the fuses OK?

   YES—Go to step 2.

   NO—Find and repair the cause of the blown fuse.■

2. Remove the driver's dashboard lower cover (see page 20-153).

3. Turn the ignition switch to ON (II), and move the ceiling light switch to the middle (door) position.

4. Connect the MPCS service connector (A) to the MICU service check connector socket (B) in the driver's under-dash fuse/relay box.

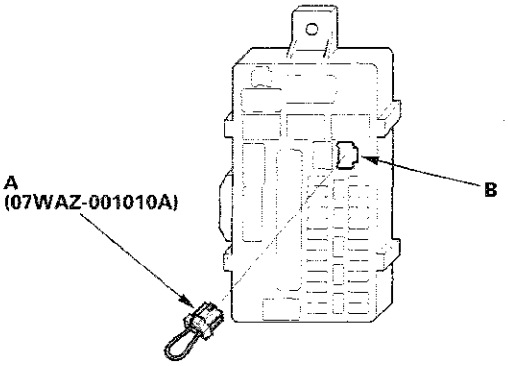

5. Wait 5 seconds, and watch the ceiling light. When the ceiling light flashes quickly once and then goes off, the system is in Test Mode 1.

6. Check for B-CAN DTCs indicated by the gauge control module odo/trip display while still in Test Mode 1. Push the odometer select/reset button to display the next code. After you get to the last code, the display shows END. If no DTCs are stored, the display will read NO.

   Are any DTCs indicated?

   YES—Go to step 7.

   NO—Go to step 10.

7. Record all DTCs and sort them.

8. Troubleshoot the DTCs in this order:

   - Battery voltage DTCs
   - Internal error DTCs
   - Loss of communication DTCs
   - Signal error DTCs

9. Clear the DTCs by pressing and holding the select/reset button for about 10 seconds. You will hear a beep to confirm the codes have been cleared. Operate the devices that failed, and recheck for codes.

Test Mode 2

10. Remove the MPCS service connector from the driver's under-dash fuse/relay box MICU service check connector socket for 5—10 seconds, then re-insert it to enter Mode 2. When the system enters Mode 2, the ceiling light will flash two times quickly and then go off.

    NOTE: If the MPCS service connector is disconnected for too short or too long of a time, or the ignition switch is turned to LOCK (0), the system will return to Test Mode 1.

11. The following tables list the circuits that can be checked in Test Mode 2. Operate the switch that is most closely related to the problem. If the circuit is OK, the ceiling light will blink once. If the circuit is faulty, there will be no indication.

(cont'd)

Troubleshooting - B-CAN System Diagnosis Test Mode 1 and Test Mode 2 (without the HDS) (cont'd)

Driver's MICU

Item
Brake pedal position switch (ON)
Driver's door switch
Left rear door switch (4-door)
Trunk lid latch switch
Left rear door lock knob switch (UNLOCK) (4-door)
Wiper switch (HI/LO)
Wiper switch (INT/LO)
Wiper switch (MIST)
Washer switch
Wiper intermittent dwell time controller
Turn signal switch (LEFT)
Turn signal switch (RIGHT)
Hazard warning switch (ON)
Headlight switch (ON)
Headlight switch (OFF)
Lighting switch (ON)
Dimmer switch (ON)
Passing switch (ON)
A/C pressure switch
Transmission range switch (P) (A/T)
Ignition key switch
Hood switch
Back-up light switch
Wiper motor park position (Auto stop)
Rear window defogger switch (HVAC only)

Passenger's MICU

Item
Front passenger's door switch
Right rear door switch (4-door)
Right rear door lock knob switch (UNLOCK) (4-door)

Door Multiplex Control Unit

Item
Driver's door lock switch (UNLOCK)
Driver's door lock switch (LOCK)
Driver's door lock knob switch (UNLOCK)
Driver's door lock knob switch (LOCK)
Driver's door lock key cylinder switch (UNLOCK)*
Driver's door lock key cylinder switch (LOCK)*

* A second key is necessary to check the key cylinder inputs. Be sure to rotate the key cylinder switch two times to each position (lock and lock, unlock and unlock) to ensure the door lock knob switch is in the appropriate position.

Front Passenger's Power Window Switch

Item
Front passenger's door lock switch (UNLOCK)
Front passenger's door lock switch (LOCK)
Front passenger's door lock knob switch (UNLOCK)

Does the ceiling light work properly in all switch positions?

YES—Go to function and input test for the system related to the failure. ■

NO—Repair the open, short, or replace the faulty switch. ■

Sleep and Wake-up Mode Test

1. Shift to the sleep mode:
   Turn the ignition switch to LOCK (0), and remove the key, then open and close the driver's door. If the MICU receives no signals from the inputs listed below, it will go into sleep mode in less than 40 seconds.

Trunk lid latch switch (Trunk lid closed) (OFF)
Hazard warning switch (OFF)

2. Confirm the sleep mode:
   Measure the voltage on the B-CAN communication line (PNK and BLU wires); there should be battery voltage in the sleep mode. Check the parasitic draw at the battery while shifting into the sleep mode; amperage should change from about 200 mA to less than 35 mA.

3. Shift to the wake up mode:
   When the ignition switch is turned ON (II), the driver's MICU, passenger's MICU, gauge control module, immobilizer-keyless control unit, and ECM/PCM wake up at the same time without "talking" to each other through the communication lines. When any switch in the multiplex integrated control system is turned on, it wakes up its related control unit which, in turn, wakes up the other units. After confirming the sleep mode, look in the following table for the switch most related to the problem. Operate that switch and see if its control unit wakes up.

   NOTE: If any control unit is faulty and will not wake up, several circuits in the system will malfunction at the same time. In the table below, the control unit is followed by a list of the switches and input signals that can wake it up.

Driver's door switch (door open)
Left rear door switch (door open) (4-door)
Trunk lid latch switch (Trunk lid open)
Left rear door lock knob switch (4-door)
Hood switch (hood open)
Hazard warning switch (ON)
Combination light switch (Parking, Headlight, Dimmer, Passing ON)
Ignition key switch (key inserted)

HONDA

Circuit Diagram

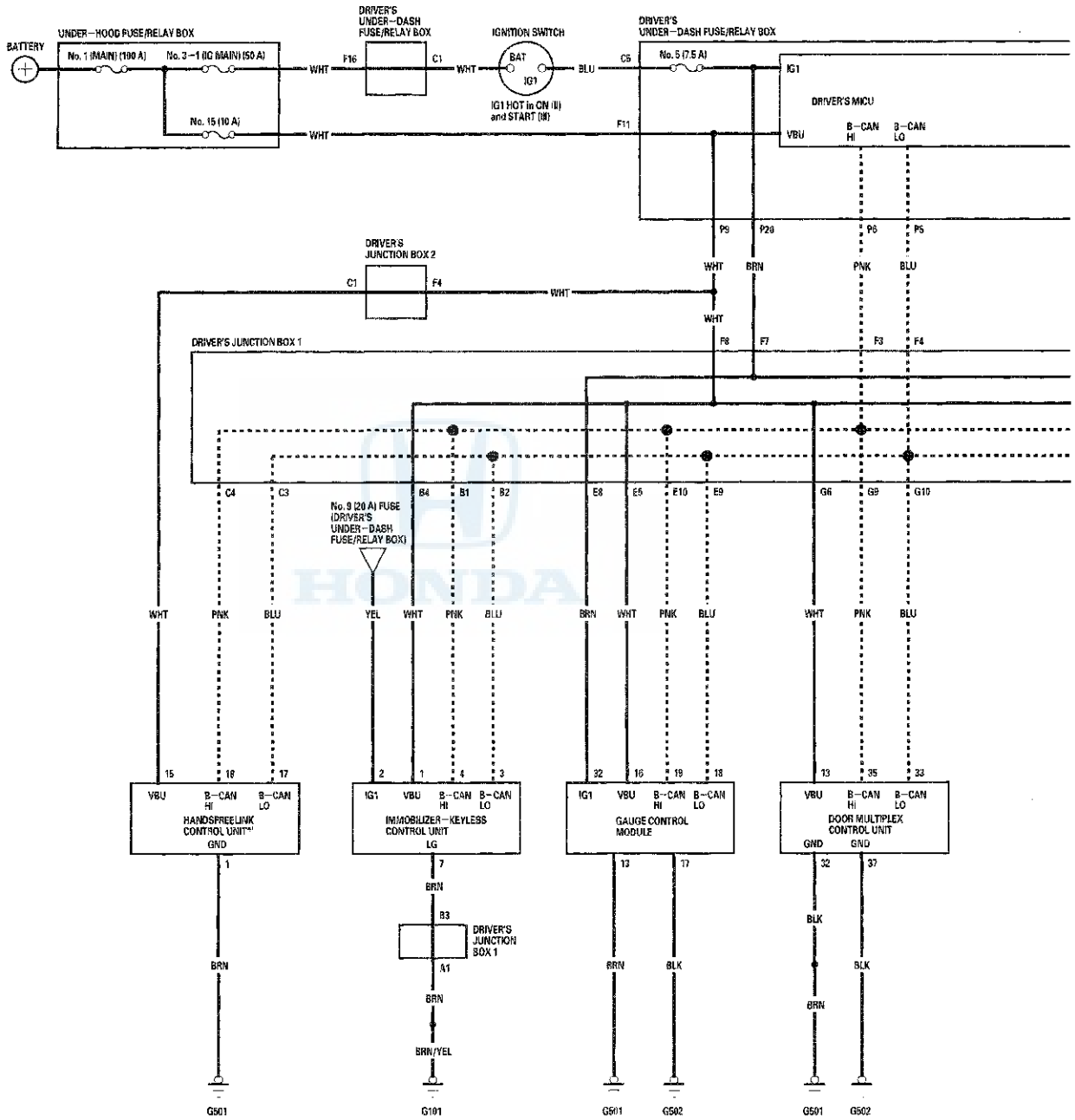

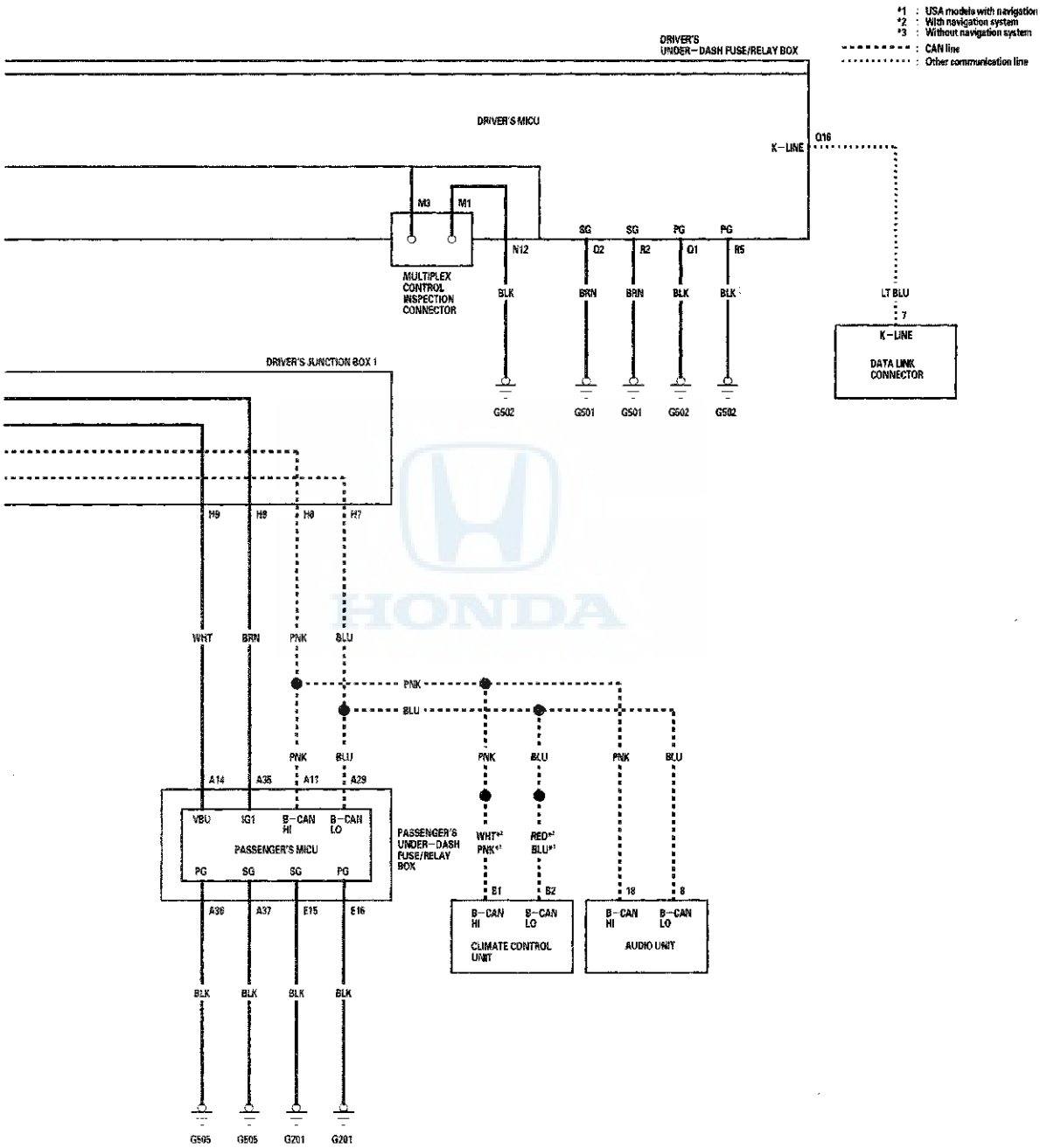
*1 : USA models with navigation
*2 : With navigation system
*3 : Without navigation system
CAN line
Other communication line
DRIVER'S UNDER-DASH FUSE/RELAY BOX
DRIVER'S MICU
K-LINE
Q16
M3
M1
MULTIPLEX CONTROL INSPECTION CONNECTOR
N12
SG
SG
PG
PG
Q2
R2
Q1
R5
BLK
BRN
BRN
BLK
BLK
LT BLU
7
K-LINE
DATA LINK CONNECTOR
G502
G501
G501
G502
G502
DRIVER'S JUNCTION BOX 1
H9
H8
H8
H7
WHT
BRN
PNK
BLU
PNK
BLU
PNK
BLU
PNK
BLU
PNK
BLU
A14
A35
A17
A29
VBU
IG1
B-CAN HI
B-CAN LO
PASSENGER'S MICU
PG
SG
SG
PG
PASSENGER'S UNDER-DASH FUSE/RELAY BOX
WHT*2
PNK*3
RED*2
BLU*3
B1
B2
18
8
B-CAN HI
B-CAN LO
CLIMATE CONTROL UNIT
B-CAN HI
B-CAN LO
AUDIO UNIT
A36
A37
E15
E16
BLK
BLK
BLK
BLK
G505
G505
G201
G201

DTC Troubleshooting

DTC B10A2: Driver's MICU (EEPROM) Error

NOTE: If you are troubleshooting multiple DTCs, be sure to follow the instructions in B-CAN System Diagnosis Test Mode A (see page 22-120).

1. Clear the DTCs with the HDS.
2. Turn the ignition switch to LOCK (0) and then back to ON (II).
3. Wait for 6 seconds or more.
4. Check for DTCs with the HDS.

   Is DTC B10A2 indicated?

   YES—Faulty driver's MICU; replace the driver's under-dash fuse/relay box. ■

   NO—Intermittent failure, the system is OK at this time. ■

DTC B11A2: Passenger's MICU (EEPROM) Error

NOTE: If you are troubleshooting multiple DTCs, be sure to follow the instructions in B-CAN System Diagnosis Test Mode A (see page 22-120).

1. Clear the DTCs with the HDS.
2. Turn the ignition switch to LOCK (0) and then back to ON (II).
3. Wait for 6 seconds or more.
4. Check for DTCs with the HDS.

   Is DTC B11A2 indicated?

   YES—Faulty passenger's MICU; replace the passenger's under-dash fuse/relay box. ■

   NO—Intermittent failure, the system is OK at this time. ■

DTC B1036: Driver's MICU IG1 Line Input Error

NOTE: If you are troubleshooting multiple DTCs, be sure to follow the instructions in B-CAN System Diagnosis Test Mode A (see page 22-120).

1. Clear the DTCs with the HDS.
2. Turn the ignition switch to LOCK (0) and then back to ON (II).
3. Wait for 6 seconds or more.
4. Check for DTCs with the HDS.

   Is DTC B1036 indicated?

   YES—Go to step 5.

   NO—Intermittent failure, the system is OK at this time. Check for loose or poor connections at the driver's under-dash fuse/relay box connector C (5P). If the connections are good, check the battery condition (see page 22-88) and the charging system. ■

5. Measure the voltage between the gauge control module 32P connector terminals No. 32 and No. 17.

GAUGE CONTROL MODULE 32P CONNECTOR

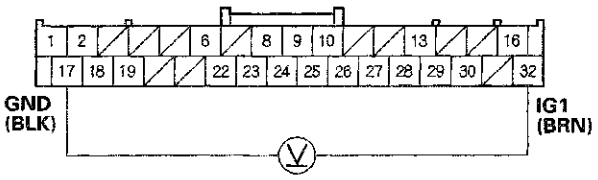

Wire side of female terminals

Is there battery voltage?

YES—Faulty driver's MICU; substitute a known-good driver's under-dash fuse/relay box and recheck. ■

NO—Check the No. 5 (7.5 A) fuse in the driver's under-dash fuse/relay box. If the fuse is OK, check for an open in the BLK wire or a poor connection at G502, or an open in the wire between the driver's under-dash fuse/relay box and the gauge control module, or repair a short in the wire between the driver's under-dash fuse/relay box and the gauge control module. ■

DTC Troubleshooting (cont'd)

DTC B11C7: Passenger's MICU IG1 Line Input Error

NOTE: If you are troubleshooting multiple DTCs, be sure to follow the instructions in B-CAN System Diagnosis Test Mode A (see page 22-120).

1. Clear the DTCs with the HDS.
2. Turn the ignition switch to LOCK (0) and then back to ON (II).
3. Wait for 6 seconds or more.
4. Check for DTCs with the HDS.

   Is DTC B11C7 indicated?

   YES—Go to step 5.

   NO—Intermittent failure, the system is OK at this time. Check for loose or poor connections. If the connections are good, check the battery condition (see page 22-88) and the charging system. ■

5. Check the DTCs with the HDS.

   Is DTC B11C7 indicated with DTC U1282?

   YES—Go to DTC U1282 troubleshooting. ■

   NO—Go to step 6.

6. Turn the ignition switch to LOCK (0).
7. Disconnect passenger's under-dash fuse/relay box connector A (38P).
8. Turn the ignition switch to ON (II).
9. Measure the voltage between the passenger's under-dash fuse/relay box connector A (38P) terminal No. 35 and body ground.

PASSENGER'S UNDER-DASH FUSE/RELAY BOX CONNECTOR A (38P)

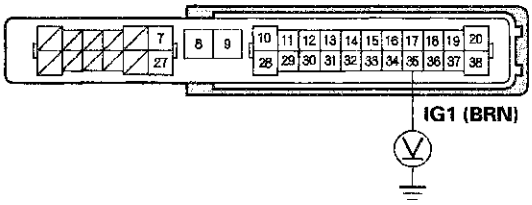

Wire side of female terminals

Is there battery voltage?

YES—Faulty passenger's MICU; substitute a known-good passenger's under-dash fuse/relay box and recheck. ■

NO—Check the No. 5 (7.5 A) fuse in the driver's under-dash fuse/relay box. If the fuse is OK, check for an open in the BRN wire between the driver's under-dash fuse/relay box and the passenger's under-dash fuse/relay box. ■

DTC U0155: Driver's MICU Lost Communication with Gauge Control Module

NOTE: If you are troubleshooting multiple DTCs, be sure to follow the instructions in B-CAN System Diagnosis Test Mode A (see page 22-120).

1. Clear the DTCs with the HDS.
2. Turn the ignition switch to LOCK (0) and then back to ON (II).
3. Wait for 6 seconds or more.
4. Check for DTCs with the HDS.

   Is DTC U0155 indicated?

   YES—Go to the gauge control module input test, and do all power, ground, and communication input tests (see page 22-320). If the tests prove OK, replace the gauge control module. ■

   NO—Intermittent failure, the system is OK at this time. Check for loose or poor connections at the gauge control module (32P) and the related units. ■

DTC U0155: Passenger's MICU Lost Communication with Gauge Control Module

NOTE: If you are troubleshooting multiple DTCs, be sure to follow the instructions in B-CAN System Diagnosis Test Mode A (see page 22-120).

1. Clear the DTCs with the HDS.
2. Turn the ignition switch to LOCK (0) and then back to ON (II).
3. Wait for 6 seconds or more.
4. Check for DTCs with the HDS.

   Is DTC U0155 indicated?

   YES—Go to the gauge control module input test, and do all power, ground, and communication input tests (see page 22-320). If the tests prove OK, replace the gauge control module. ■

   NO—Intermittent failure, the system is OK at this time. Check for loose or poor connections at the gauge control module (32P) and the related units. ■

HONDA

DTC Troubleshooting (cont'd)

DTC U0199: Driver's MICU Lost Communication with Door Multiplex Control Unit

NOTE: If you are troubleshooting multiple DTCs, be sure to follow the instructions in B-CAN System Diagnosis Test Mode A (see page 22-120).

1. Clear the DTCs with the HDS.
2. Turn the ignition switch to LOCK (0) and then back to ON (II).
3. Wait for 6 seconds or more.
4. Check for DTCs with the HDS.

   Is DTC U0199 indicated?

   YES—Go to the door multiplex control unit input test, and do all power, ground, and communication input tests (see page 22-262). If the tests prove OK, replace the power window master switch. ■

   NO—Intermittent failure, the system is OK at this time. Check for loose or poor connections at the door multiplex control unit 37P connector and the related units. ■

DTC U1280: Communication Bus Line Error (BUS-OFF)

1. Clear the DTCs with the HDS.

2. Turn the ignition switch to LOCK (0) and then back to ON (II).

3. Wait for 6 seconds or more.

4. Check for DTCs with the HDS.

   Is DTC U1280 indicated?

   YES—Go to step 5.

   NO—Intermittent failure, the system is OK at this time. Check for loose or poor connections, or worn/shorted wires. If the connections are good, check the battery condition (see page 22-88) and the charging system. ■

5. Turn the ignition switch to LOCK (0).

6. Disconnect the appropriate connector at each control unit in the table one at a time. Clear the DTC, then recheck for DTCs after each unit is disconnected.

Control Unit	Connector
Passenger's MICU	Passenger's under-dash fuse/relay box connector A (38P)
Door multiplex control unit	37P connector
Gauge control module	32P connector
Immobilizer-keyless control unit	7P connector
Audio unit*1	Connector B (20P)
Climate control unit*2	Connector B (12P)
HandsFreeLink control unit*3	28P connector

* 1: With premium audio system
* 2: With climate control system
* 3: USA models with climate control system

   Is DTC U1280 indicated with each individual unit disconnected?

   YES—Go to step 7.

   NO—Go to the input test for the control unit that was disconnected when DTC U1280 did not reset and do all power and ground input tests. If the tests prove OK, replace that unit. ■

   - Passenger's MICU input test (see page 22-142).
   - Gauge control module input test (see page 22-320).
   - Door multiplex control unit input test (see page 22-262).
   - Climate control unit input test (see page 21-164).
   - Immobilizer-keyless control unit input test (see page 22-400).
   - HandsFreeLink control unit input test (see page 23-266).

7. Turn the ignition switch to LOCK (0).

8. Disconnect each control unit connector in the table.

Control Unit	Connector
Passenger's MICU	Passenger's under-dash fuse/relay box connector A (38P)
Door multiplex control unit	37P connector
Gauge control module	32P connector
Immobilizer-keyless control unit	7P connector
Audio unit*1	Connector B (20P)
Climate control unit*2	Connector B (12P)
HandsFreeLink control unit*3	28P connector

* 1: With premium audio system
* 2: With climate control system
* 3: USA models with climate control system

(cont'd)

DTC Troubleshooting (cont'd)

9. Disconnect driver's under-dash fuse/relay box connector P (20P).

10. Check for continuity between driver's under-dash fuse/relay box connector P (20P) terminals No. 5 and No. 6.

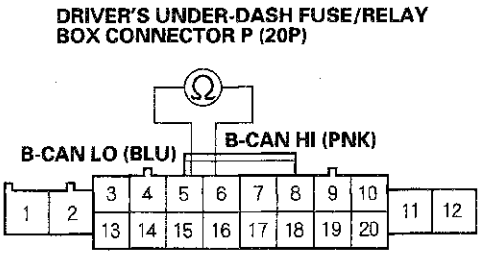

Wire side of female terminals

Is there continuity?

YES—Repair short between the B-CAN wires.■

NO—Go to step 11.

11. Check for continuity between body ground and the driver's under-dash fuse/relay box connector P (20P) terminals No. 5 and No. 6 individually.

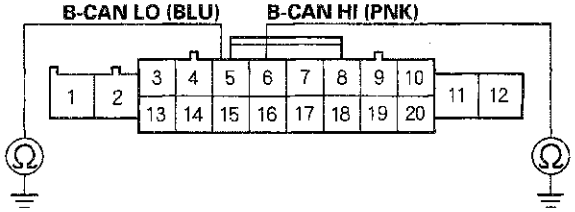

Wire side of female terminals

Is there continuity?

YES—Repair a short to ground in the wire.■

NO—Go to step 12.

12. Turn the ignition switch ON (II).

13. Measure the voltage between body ground and the driver's under-dash fuse/relay box connector P (20P) terminals No. 5 and No. 6 individually.

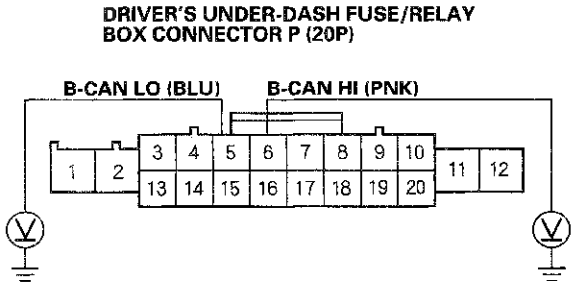

Wire side of female terminals

Is there voltage?

YES—Repair a short to power in the wire.■

NO—Faulty driver's MICU, replace the driver's under-dash fuse/relay box.■

DTC U1282: Passenger's MICU Lost Communication with Driver's MICU

NOTE: If you are troubleshooting multiple DTCs, be sure to follow the instructions in B-CAN System Diagnosis Test Mode A (see page 22-120).

1. Clear the DTCs with the HDS.
2. Turn the ignition switch to LOCK (0) and then back to ON (II).
3. Wait for 6 seconds or more.
4. Check for DTCs with the HDS.

   Is DTC U1282 indicated?

   YES—Go to the driver's MICU input test, and do all power, ground, and communication input tests (see page 22-138). If the tests prove OK, replace the driver's under-dash fuse/relay box. ■

   NO—Intermittent failure, the system is OK at this time. Check for loose or poor connections at driver's under-dash fuse/relay box connector P (20P) and the related units. ■

DTC U1283: Driver's MICU Lost Communication with Passenger's MICU

NOTE: If you are troubleshooting multiple DTCs, be sure to follow the instructions in B-CAN System Diagnosis Test Mode A (see page 22-120).

1. Clear the DTCs with the HDS.
2. Turn the ignition switch to LOCK (0) and then back to ON (II).
3. Wait for 6 seconds or more.
4. Check for DTCs with the HDS.

   Is DTC U1283 indicated?

   YES—Go to the passenger's MICU input test, and do all power, ground, and communication input tests (see page 22-142). If the tests prove OK, replace the driver's under-dash fuse/relay box. ■

   NO—Intermittent failure, the system is OK at this time. Check for loose or poor connections at driver's under-dash fuse/relay box connector P (20P) and the related units. ■

MICU Input Test

NOTE: Before testing, troubleshoot the multiplex integrated control unit first, using B-CAN System Diagnosis Test Mode A (see page 22-120).

Driver's MICU

1. Turn the ignition switch to LOCK (0), and remove the driver's dashboard lower cover (see page 20-153).
2. Disconnect driver's under-dash fuse/relay box connectors N, P, Q, and R.

   NOTE: All connector views are wire side of female terminals.

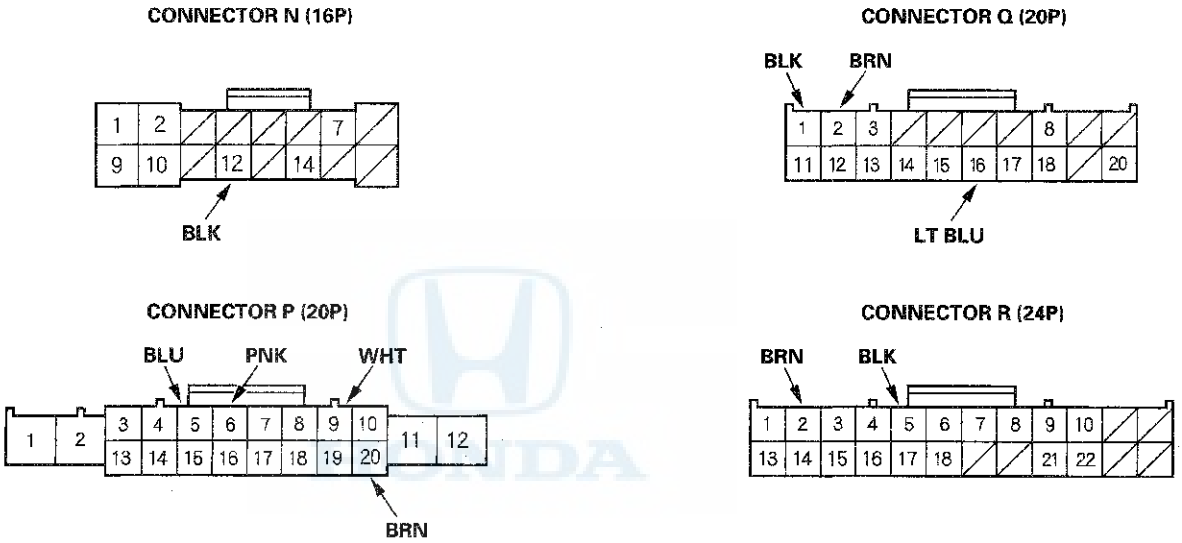

3. Inspect the connector and socket terminals to be sure they are all making good contact.
   - If the terminals are bent, loose or corroded, repair them as necessary and recheck the system.
   - If the terminals look OK, go to step 4.

4. With the connectors still disconnected, make these input tests at the connectors.

- If any test indicates a problem, find and correct the cause, then recheck the system.
- If all the input tests prove OK, go to step 5.

Cavity	Wire	Test condition	Test: Desired result	Possible cause if desired result is not obtained
P5	BLU	Immobilizer-keyless control unit 7P connector disconnected	Check for continuity between the terminal P5 and the immobilizer-keyless control unit 7P connector terminal No. 3: There should be continuity.	An open in the wire
P6	PNK		Check for continuity between the terminal P6 and the immobilizer-keyless control unit 7P connector terminal No. 4: There should be continuity.	An open in the wire
P5	BLU	Gauge control module 32P connector disconnected	Check for continuity between the terminal P5 and the gauge control module 32P connector terminal No. 18: There should be continuity.	An open in the wire
P6	PNK		Check for continuity between the terminal P6 and the gauge control module 32P connector terminal No. 19: There should be continuity.	An open in the wire
P5	BLU	Door multiplex control unit 37P connector disconnected	Check for continuity between the terminal P5 and the door multiplex control unit 37P connector terminal No. 33: There should be continuity.	An open in the wire
P6	PNK		Check for continuity between the terminal P6 and the door multiplex control unit 37P connector terminal No. 35: There should be continuity.	An open in the wire
P5	BLU	Passenger's under-dash fuse/relay box connector A (38P) disconnected	Check for continuity between the terminal P5 and the passenger's under-dash fuse/relay box connector A (38P) terminal No. 29: There should be continuity.	An open in the wire
P6	PNK		Check for continuity between the terminal P6 and the passenger's under-dash fuse/relay box connector A (38P) terminal No. 11: There should be continuity.	An open in the wire
P5	BLU	Climate control unit connector B (12P) disconnected	Check for continuity between the terminal P5 and the climate control unit connector B (12P) terminal No. 2: There should be continuity.	An open in the wire
P6	PNK		Check for continuity between the terminal P6 and the climate control unit connector B (12P) terminal No. 1: There should be continuity.	An open in the wire

(cont'd)

MICU Input Test (cont'd)

Cavity	Wire	Test condition	Test: Desired result	Possible cause if desired result is not obtained
P5	BLU	Audio unit connector B (20P)*1 disconnected	Check for continuity between the terminal P5 and the audio unit connector B (20P) terminal No. 8: There should be continuity.	An open in the wire
P6	PNK		Check for continuity between the terminal P6 and the audio unit connector B (20P) terminal No. 18: There should be continuity.	An open in the wire
P5	BLU	HandsFreeLink control unit 28P connector*2 disconnected	Check for continuity between the terminal P5 and the HandsFreeLink control unit 28P connector terminal No. 17: There should be continuity.	An open in the wire
P6	PNK		Check for continuity between the terminal P6 and the HandsFreeLink control unit 28P connector terminal No. 18: There should be continuity.	An open in the wire
Q16	LT BLU	Under all conditions	Check for continuity between the terminal Q16 and the data link connector 16P connector terminal No. 7: There should be continuity.	An open in the wire

* 1: With premium audio system
* 2: USA models with navigation system

HONDA

5. Reconnect the connectors to the driver's under-dash fuse/relay box, turn the ignition switch to ON (II), and make these input tests at the connectors.

   - If any test indicates a problem, find and correct the cause, then recheck the system.
   - If all the input tests prove OK, go to step 6.

   NOTE: These are power and ground tests for the multiplex integrated control unit.

Cavity	Wire	Test condition	Test: Desired result	Possible cause if desired result is not obtained
N12	BLK	Under all conditions	Measure the voltage to ground: There should be less than 0.5 V.	• Poor ground (G502) • An open in the wire
Q1	BLK	Under all conditions	Measure the voltage to ground: There should be less than 0.5 V.	• Poor ground (G502) • An open in the wire
Q2	BRN	Under all conditions	Measure the voltage to ground: There should be less than 0.5 V.	• Poor ground (G501) • An open in the wire
R2	BRN	Under all conditions	Measure the voltage to ground: There should be less than 0.5 V.	• Poor ground (G501) • An open in the wire
R5	BLK	Under all conditions	Measure the voltage to ground: There should be less than 0.5 V.	• Poor ground (G502) • An open in the wire
P9	WHT	Under all conditions	Measure the voltage to ground: There should be battery voltage.	• Blown No. 15 (10 A) fuse in the under-hood fuse/relay box • Faulty driver's under-dash fuse/relay box • An open in the wire
P20	BRN	Ignition switch ON (II)	Measure the voltage to ground: There should be battery voltage.	• Blown No. 5 (7.5 A) fuse in the driver's under- dash fuse/relay box • Faulty driver's under-dash fuse/relay box • An open in the wire

(cont'd)

MICU Input Test (cont'd)

Passenger's MICU

6. Turn the ignition switch to LOCK (0), and remove the right kick panel.

   - 2-door (see page 20-97)
   - 4-door (see page 20-99)

7. Disconnect passenger's under-dash fuse/relay box connectors A and E.

   NOTE: All connector views are wire side of female terminals.

CONNECTOR A (38P)

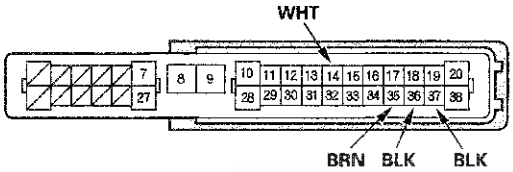

CONNECTOR E (18P)

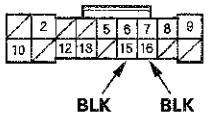

8. Inspect the connector and socket terminals to be sure they are all making good contact.

   - If the terminals are bent, loose or corroded, repair them as necessary and recheck the system.
   - If the terminals look OK, go to step 9.

9. Reconnect the connectors to the passenger's under-dash fuse/relay box, turn the ignition switch to ON (II), and make these input tests at the connectors.

   - If any test indicates a problem, find and correct the cause, then recheck the system.
   - If all the input tests prove OK, go to step 10.

Cavity	Wire	Test condition	Test: Desired result	Possible cause if desired result is not obtained
A14	WHT	Under all conditions	Measure the voltage to ground: There should be battery voltage.	• Blown No. 15 (10 A) fuse in the under-hood fuse/relay box • Faulty driver's under-dash fuse/relay box • An open in the wire
A35	BRN	Ignition switch ON (II)	Measure the voltage to ground: There should be battery voltage.	• Blown No. 5 (7.5 A) fuse in the driver's under-dash fuse/relay box • Faulty driver's under-dash fuse/relay box • An open in the wire
A36	BLK	Under all conditions	Measure the voltage to ground: There should be less than 0.5 V.	• Poor ground (G505) • An open in the wire
A37	BLK	Under all conditions	Measure the voltage to ground: There should be less than 0.5 V.	• Poor ground (G505) • An open in the wire
E15	BLK	Under all conditions	Measure the voltage to ground: There should be less than 0.5 V.	• Poor ground (G201) • An open in the wire
E16	BLK	Under all conditions	Measure the voltage to ground: There should be less than 0.5 V.	• Poor ground (G201) • An open in the wire

10. If multiple failures are found on more than one control unit, replace the driver's under-dash fuse/relay box (includes the driver's MICU) (see page 22-84). If input failures are related to a particular control unit, replace the control unit.

Component Location Index

4-door

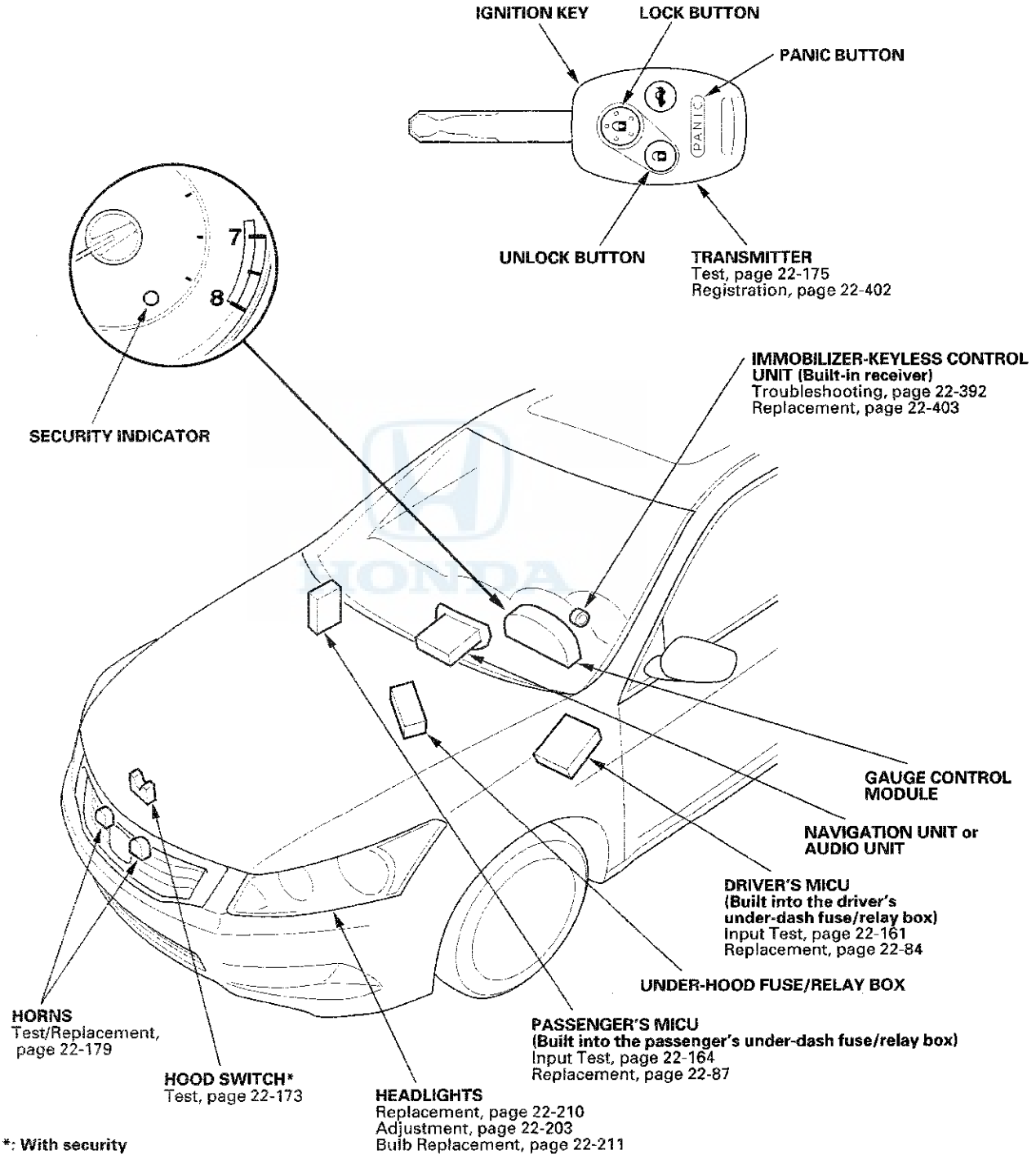

*: With security

(cont'd)

Component Location Index (cont'd)

4-door

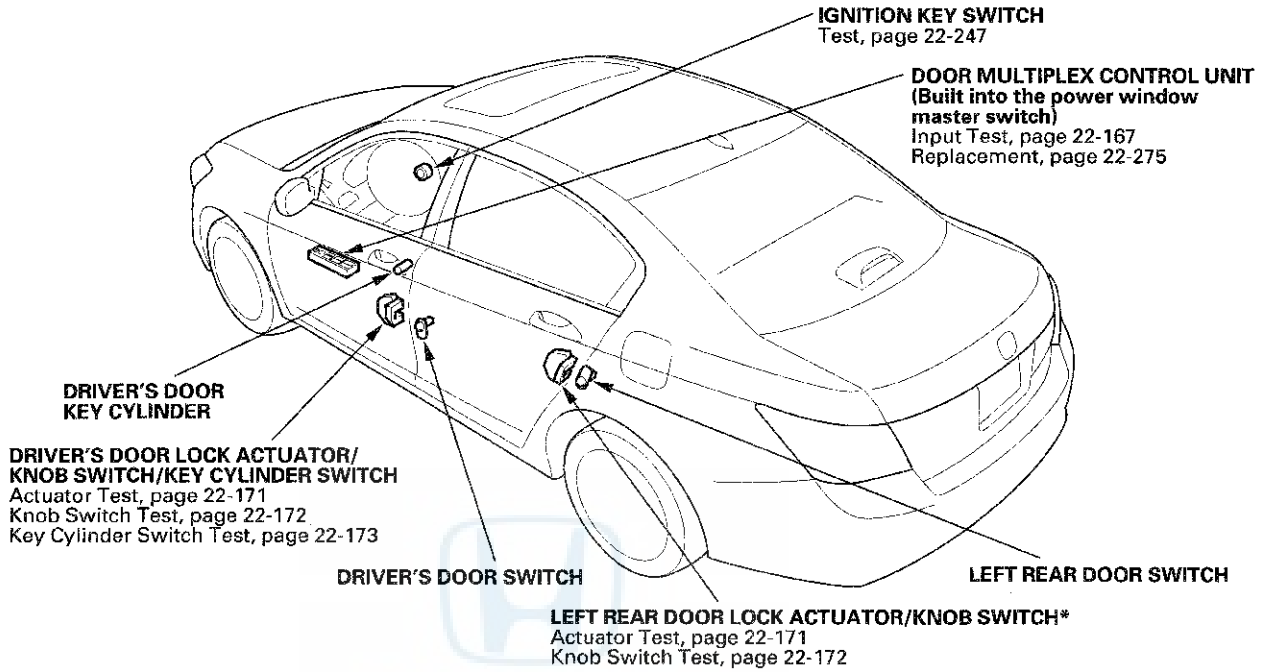

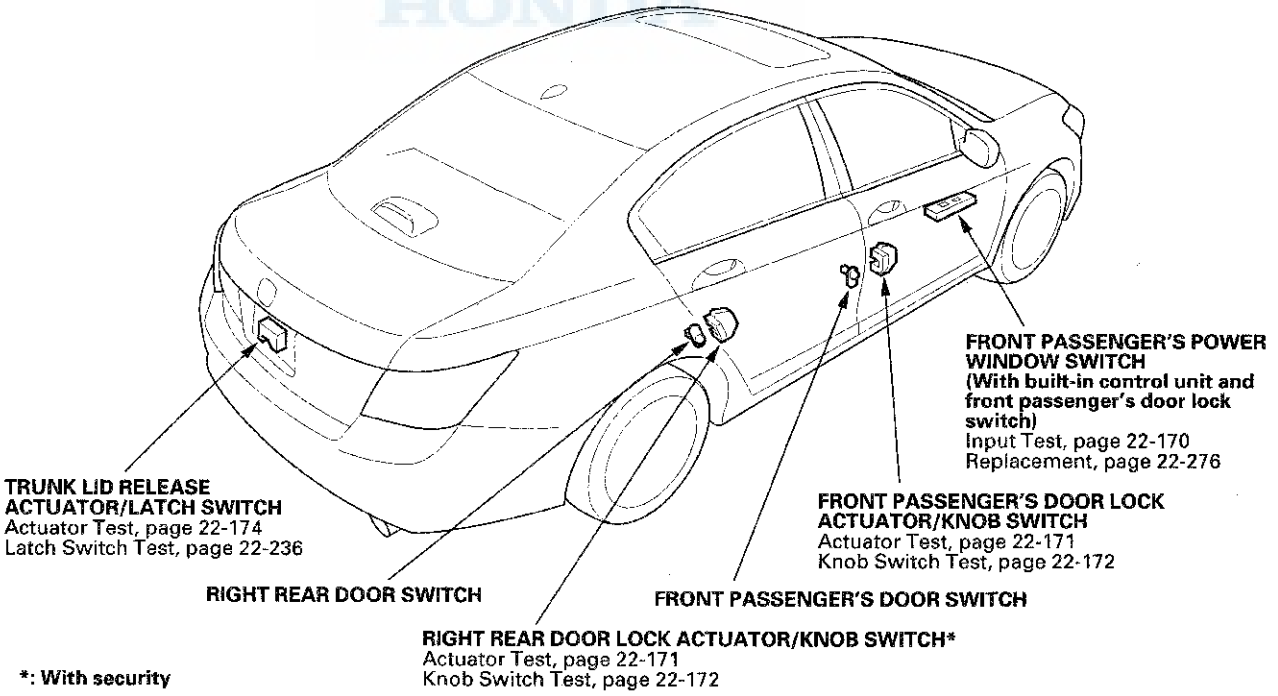

*: With security

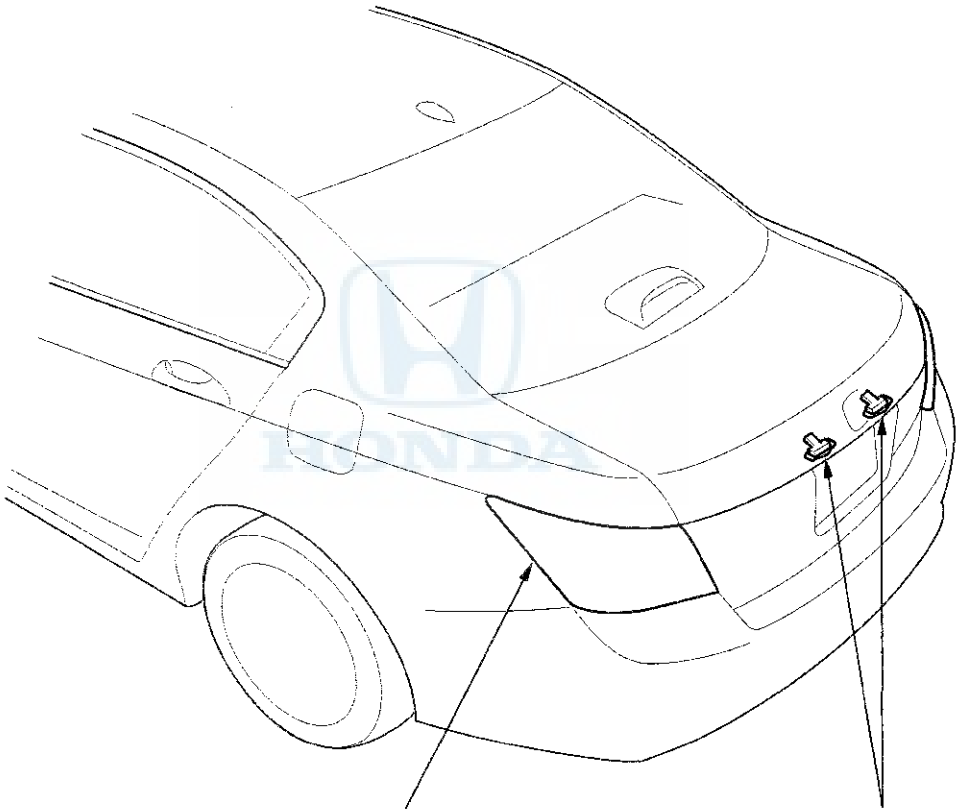

LICENSE PLATE LIGHTS
Replacement, page 22-215

TAILLGHT
Replacement, page 22-214
Bulb Replacement, page 22-211

Component Location Index (cont'd)

2-door

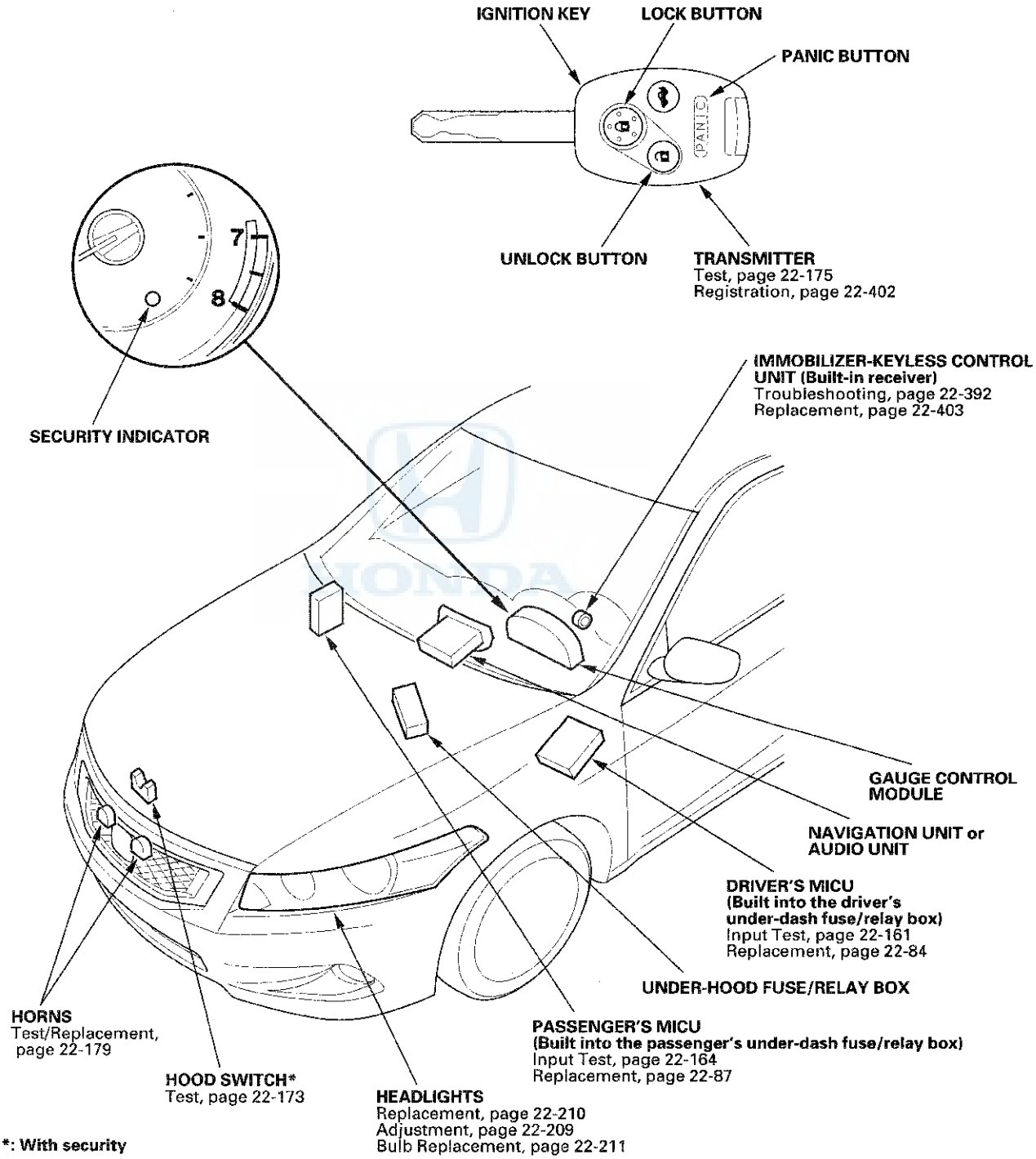

*: With security

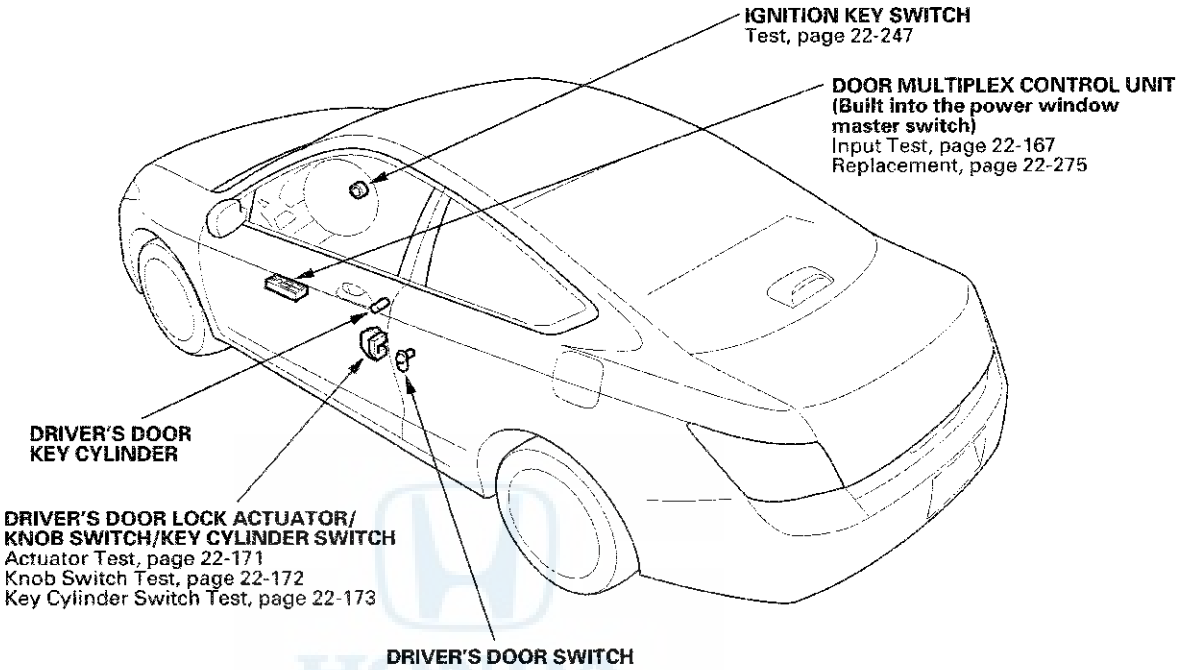

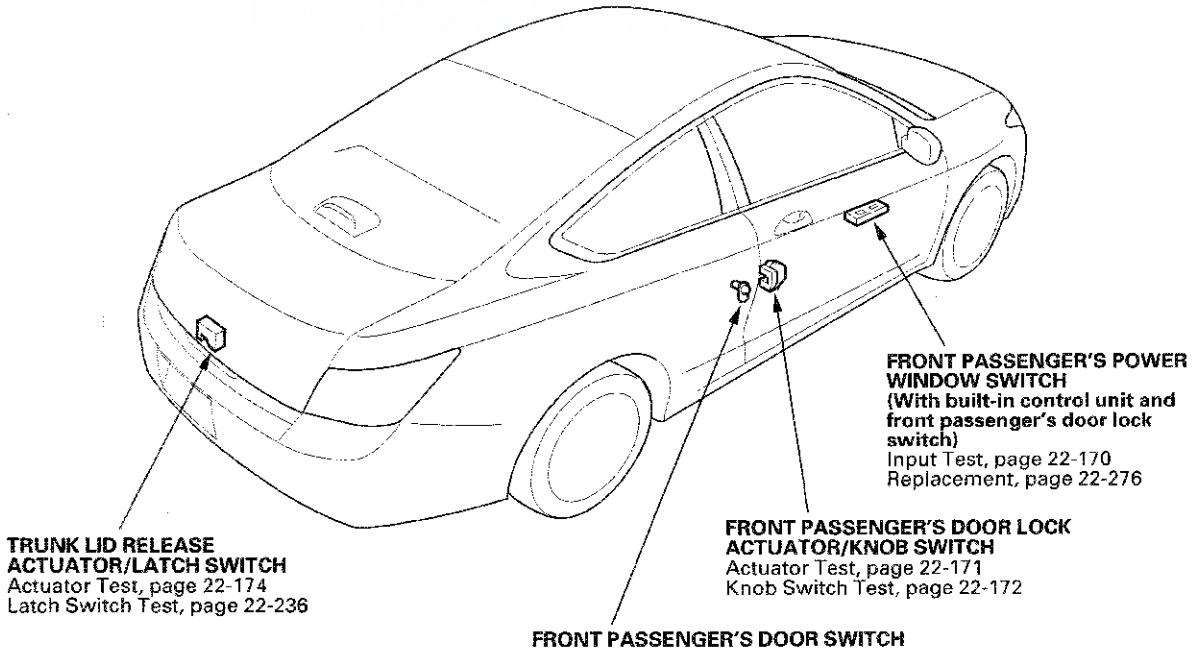

*: With security

(cont'd)

Component Location Index (cont'd)

2-door

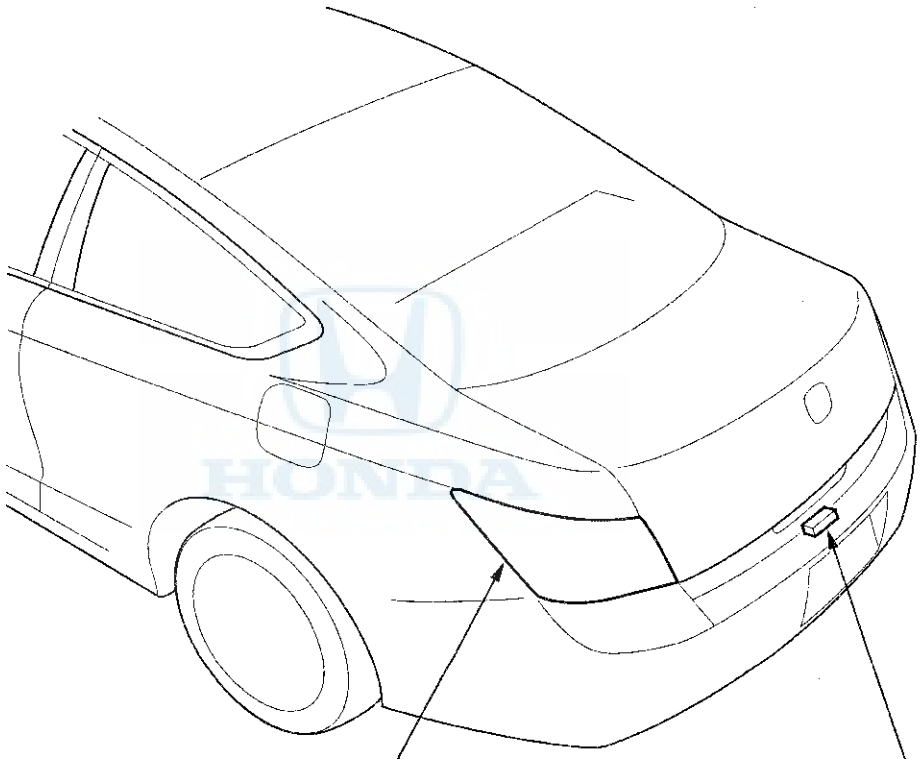

LICENSE PLATE LIGHT
Replacement, page 22-215

TAILLIGHT
Replacement, page 22-214
Bulb Replacement, page 22-211

System Description

Security Alarm

The security alarm system is armed automatically after the doors, hood, and trunk lid are closed and locked. For the system to arm, the ignition switch must be in the LOCK (0) position, the key must be removed from the ignition switch, and the driver's and passenger's MICUs must receive signals that the doors, hood, and trunk lid are closed and locked. The alarm can be disarmed at any time by unlocking the driver's door with the key or pressing the UNLOCK button on the transmitter.

When everything is closed and locked, the only inputs that are grounded, and have 0 V, are the driver's door lock knob switch (LOCK position) and the audio unit or navigation unit (if equipped). In other words, all of the other switches are open, and have about 10 to 12 V, including the key cylinder switches. The security indicator in the gauge control module begins to flash immediately after the vehicle is completely closed and locked, and 15 seconds later, the security system arms. If the security indicator does not flash, the system is not arming. A beep sounds and the parking lights flash to confirm the security alarm system is armed if the LOCK button is pressed a second time within 5 seconds.

If one of the switches is misadjusted or shorted internally, or there is a short in the circuit, the security system will not arm. As long as the control unit continues to receive a ground signal (0 V), it senses that the vehicle is not closed and locked, and the system will not arm. A switch that is slightly misadjusted can cause the alarm to sound for no apparent reason. In this case, a significant change in outside air temperature, the vibration of a passing truck, or someone bumping into the vehicle could cause the alarm to sound. There is no glass breakage or motion detector feature.

If anything is opened or improperly unlocked after the system is armed, the control unit receives a ground signal from that switch, and the 10 to 12 V reference drops to 0 V. If the audio unit or navigation unit (if equipped) is disconnected, the input loses its ground, and the input voltage goes to 10 to 12 V. The system sounds the alarm when any of these occur:

- A door or the trunk lid is forced open.
- A door is unlocked without using the key or the transmitter.
- The hood is opened.
- The audio unit or navigation unit (if equipped) is disconnected.
- The transmitter PANIC button is pressed.

When the system sounds the alarm, the horn sounds and the exterior lights flash for 2 minutes. The alarm can be stopped at any time by unlocking the driver's door with the key or by pressing any button on the transmitter.

Keyless Entry System

The keyless entry system is integrated with the multiplex integrated control system. The multiplex integrated control unit (MICU) receives LOCK, UNLOCK, and PANIC signals from the immobilizer-keyless control unit (keyless receiver).

The keyless entry system allows you to lock and unlock the vehicle with the transmitter. When you press the LOCK button, all doors lock. When you press the UNLOCK button once, only the driver's door unlocks. The other doors will unlock when you press the button a second time. The doors will not lock with the transmitter if a door is not fully closed, or if the key is in the ignition switch.

When the switch for the ceiling light is in the center (DOOR) position, it will come on when the UNLOCK button is pressed. If a door is not opened, the light will go off and the doors will relock in about 30 seconds. If the doors are locked with the transmitter within 30 seconds, the light will go off immediately.

Panic Mode

The panic mode sounds the alarm in order to attract attention. When the PANIC button on the transmitter is pressed and held for 2 seconds, the horn sounds and the exterior lights flash for about 20 seconds.

The panic mode can be cancelled at anytime by pressing any button on the transmitter or by turning the ignition switch ON (II). The panic mode will not function if the ignition switch is ON (II).

Circuit Diagram

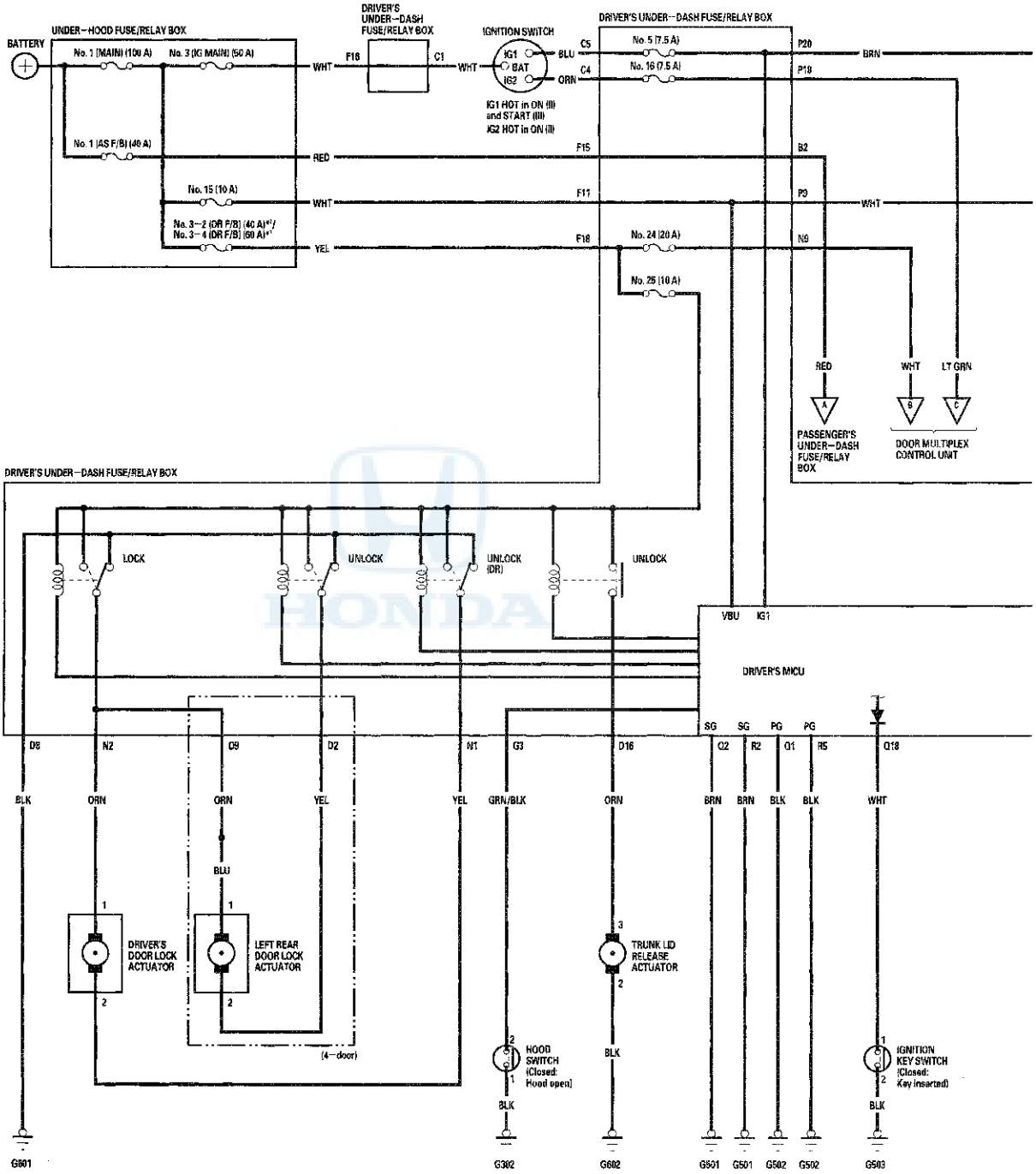

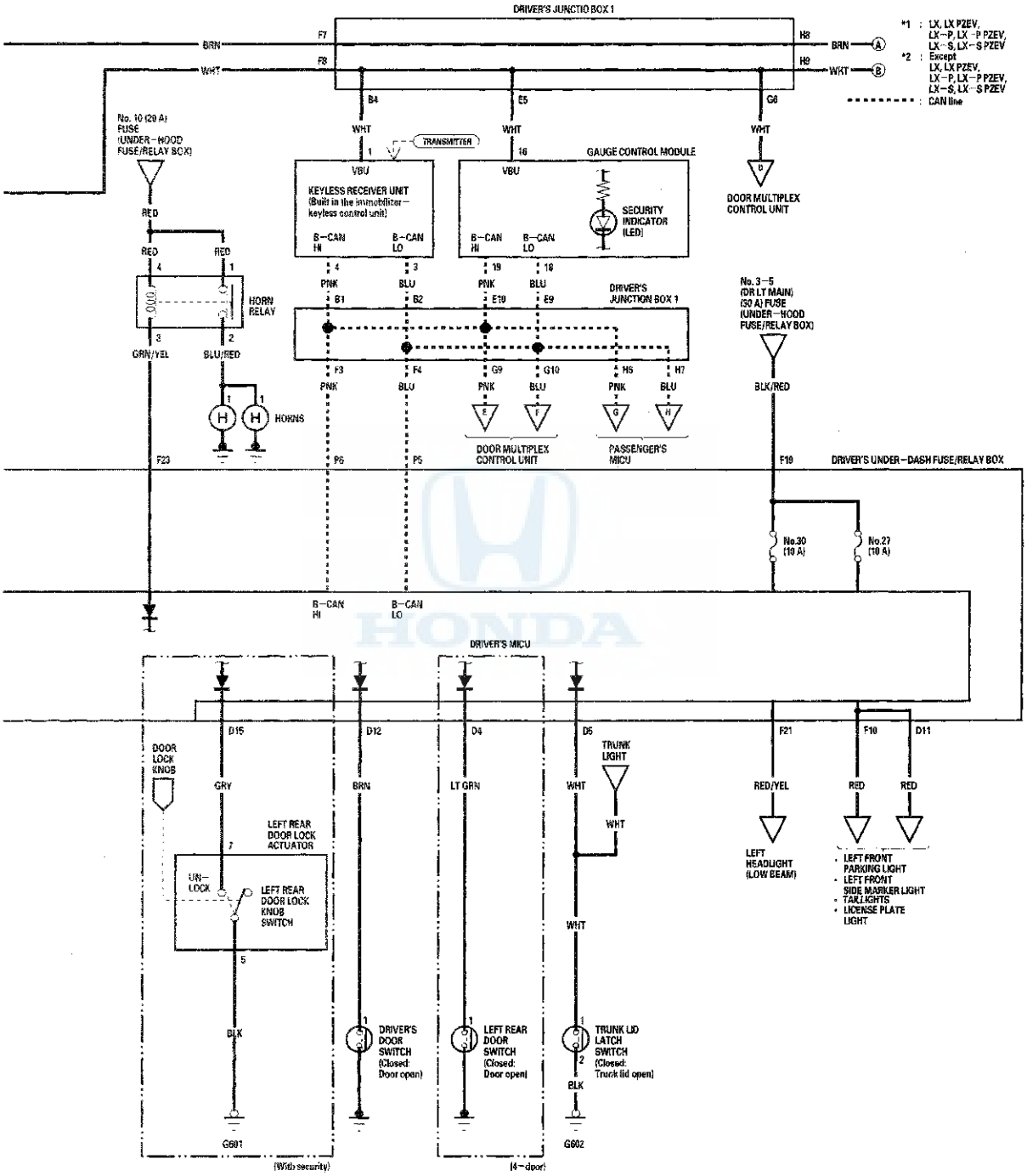
DRIVER'S JUNCTIO BOX 1
*1 : LX, LX PZEV, LX-P, LX-P PZEV, LX-S, LX-S PZEV
*2 : Except LX, LX PZEV, LX-P, LX-P PZEV, LX-S, LX-S PZEV
CAN line
No. 10 (20 A) FUSE (UNDER-HOOD FUSE/RELAY BOX)
TRANSMITTER
KEYLESS RECEIVER UNIT (Built in the immobilizer-keyless control unit)
GAUGE CONTROL MODULE
SECURITY INDICATOR (LED)
DOOR MULTIPLEX CONTROL UNIT
HORN RELAY
HORNS
DRIVER'S JUNCTION BOX 1
No. 3-5 (DR LT MAIN) (50 A) FUSE (UNDER-HOOD FUSE/RELAY BOX)
DRIVER'S UNDER-DASH FUSE/RELAY BOX
No.30 (10 A)
No.27 (10 A)
DRIVER'S MICU
DOOR LOCK KNOB
LEFT REAR DOOR LOCK ACTUATOR
UN-LOCK
LEFT REAR DOOR LOCK KNOB SWITCH
DRIVER'S DOOR SWITCH (Closed: Door open)
LEFT REAR DOOR SWITCH (Closed: Door open)
TRUNK LID LATCH SWITCH (Closed: Trunk lid open)
TRUNK LIGHT
LEFT HEADLIGHT (LOW BEAM)
LEFT FRONT PARKING LIGHT
LEFT FRONT SIDE MARKER LIGHT
TAILLIGHTS
LICENSE PLATE LIGHT
G601
G602
(With security)
(4-door)

(cont'd)

Circuit Diagram (cont'd)

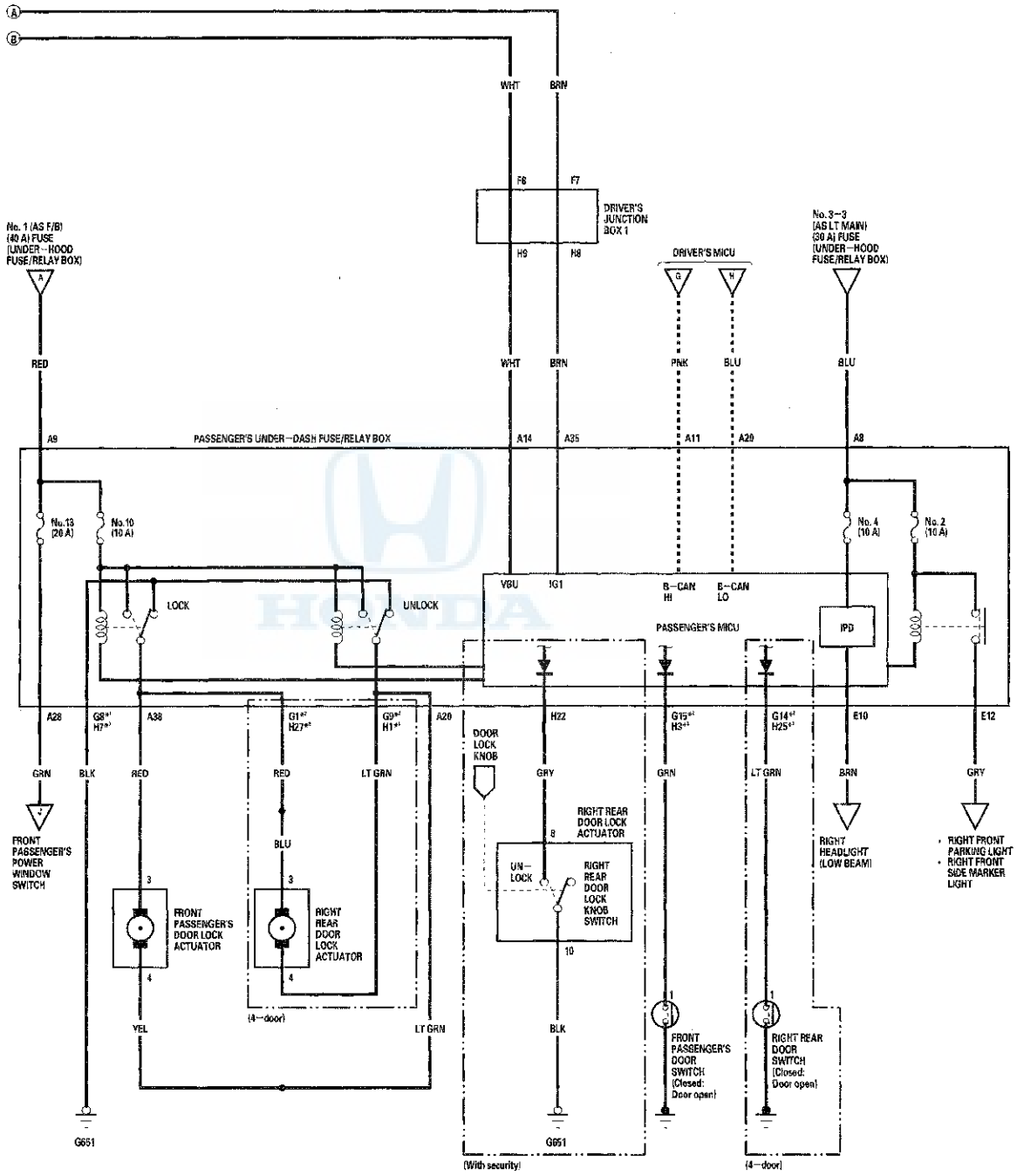

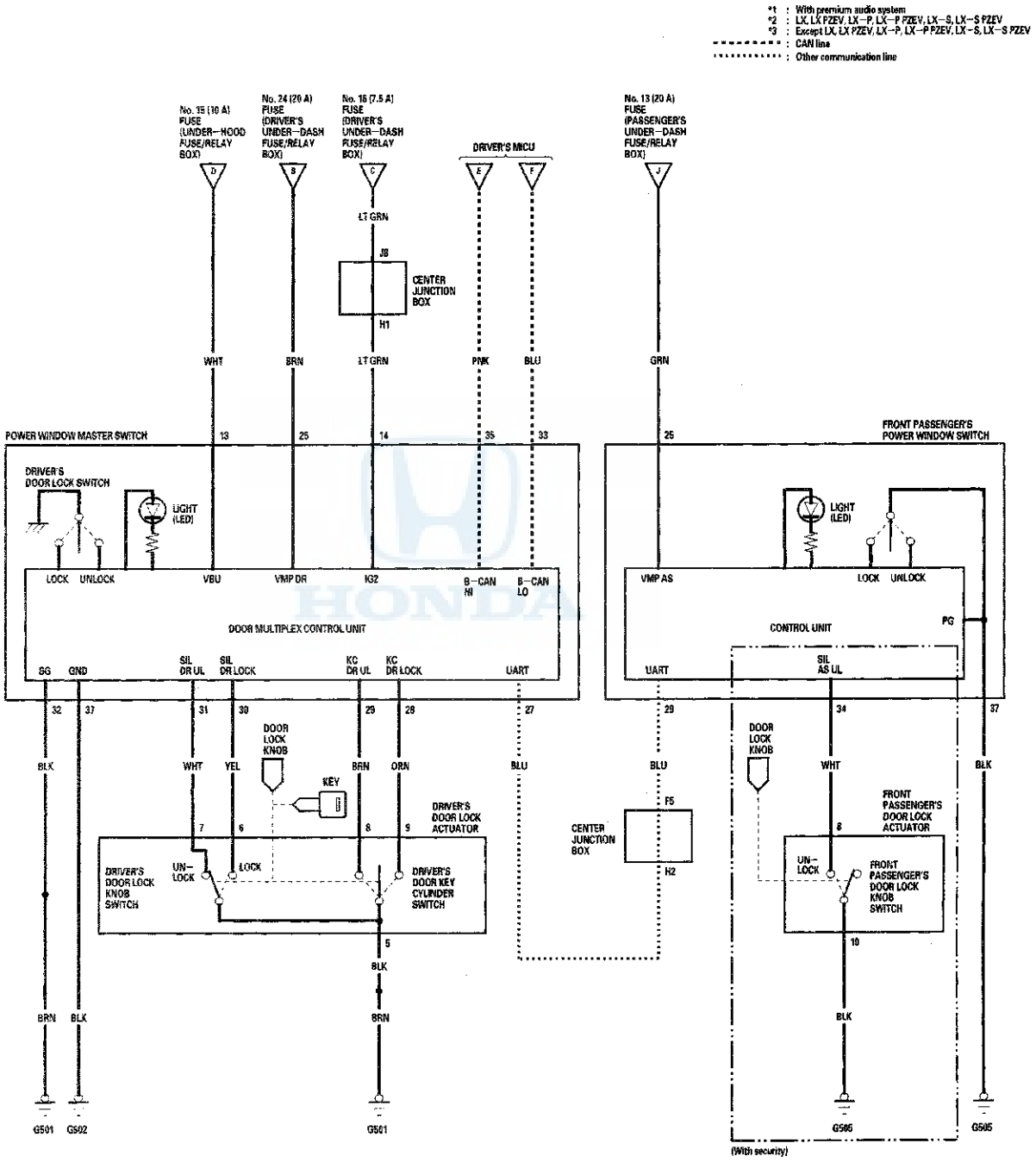
*1 : With premium audio system
*2 : LX, LX PZEV, LX-P, LX-P PZEV, LX-S, LX-S PZEV
*3 : Except LX, LX PZEV, LX-P, LX-P PZEV, LX-S, LX-S PZEV
CAN line
Other communication line
No. 15 (10 A) FUSE (UNDER-HOOD FUSE/RELAY BOX)
No. 24 (20 A) FUSE (DRIVER'S UNDER-DASH FUSE/RELAY BOX)
No. 16 (7.5 A) FUSE (DRIVER'S UNDER-DASH FUSE/RELAY BOX)
DRIVER'S MICU
No. 13 (20 A) FUSE (PASSENGER'S UNDER-DASH FUSE/RELAY BOX)
LT GRN
J8
CENTER JUNCTION BOX
H1
WHT
BRN
LT GRN
PNK
BLU
GRN
POWER WINDOW MASTER SWITCH
FRONT PASSENGER'S POWER WINDOW SWITCH
DRIVER'S DOOR LOCK SWITCH
LIGHT (LED)
LOCK
UNLOCK
VBU
VMP DR
IG2
B-CAN HI
B-CAN LO
DOOR MULTIPLEX CONTROL UNIT
SG
GND
SIL DR UL
SIL DR LOCK
KC DR UL
KC DR LOCK
UART
VMP AS
CONTROL UNIT
PG
SIL AS UL
DOOR LOCK KNOB
KEY
DRIVER'S DOOR LOCK ACTUATOR
DRIVER'S DOOR LOCK KNOB SWITCH
UN-LOCK
DRIVER'S DOOR KEY CYLINDER SWITCH
CENTER JUNCTION BOX
F5
H2
FRONT PASSENGER'S DOOR LOCK ACTUATOR
FRONT PASSENGER'S DOOR LOCK KNOB SWITCH
BLK
BRN
G501
G502
G506
G505
(With security)

DTC Troubleshooting

DTC B1127: Driver's Door Key Cylinder Switch Signal Error (LOCK/UNLOCK)

NOTE: If you are troubleshooting multiple DTCs, be sure to follow the instructions in B-CAN System Diagnosis Test Mode A (see page 22-120).

1. Clear the DTCs with the HDS.
2. Turn the ignition switch to LOCK (0) and then back to ON (II).
3. Insert the ignition key into the driver's door key cylinder switch, and turn the key to the LOCK and UNLOCK positions 10 times.
4. Check for DTCs with the HDS.

   Is DTC B1127 indicated?

   YES—Go to step 5.

   NO—Intermittent failure, the driver's door key cylinder switch system is OK at this time.■

5. With the driver's door key cylinder in the neutral position, select KEYLESS with the HDS, and enter DATA LIST.
6. Check the ON/OFF information of the DRIVER'S DOOR KEY CYLINDER SWITCH (LOCK) and DRIVER'S DOOR KEY CYLINDER SWITCH (UNLOCK) in the DATA LIST.

   Are both information indicators OFF?

   YES—Go to step 12.

   NO—Go to step 7.

7. Disconnect the driver's door lock actuator 10P connector.
8. Check the ON/OFF information of the DRIVER'S DOOR KEY CYLINDER SWITCH (LOCK) and DRIVER'S DOOR KEY CYLINDER SWITCH (UNLOCK) in the DATA LIST.

   Are both information indicators OFF?

   YES—Faulty driver's door key cylinder switch; replace the driver's door lock actuator.■

   NO—Go to step 9.

9. Turn the ignition switch to LOCK (0).
10. Disconnect the door multiplex control unit 37P connector.
11. Check for continuity between the door multiplex control unit 37P connector terminals No. 28, No. 29 and body ground individually.

DOOR MULTIPLEX CONTROL UNIT 37P CONNECTOR

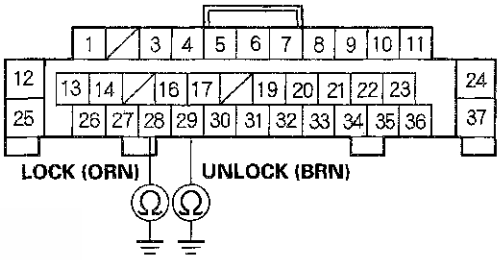

Wire side of female terminals

Is there continuity?

YES—Repair a short to ground in the LOCK or UNLOCK wire.■

NO—Replace the power window master switch (see page 22-275).■

12. Turn the ignition switch to LOCK (0).
13. Disconnect the driver's door lock actuator 10P connector.
14. Disconnect the door multiplex control unit 37P connector.

15. Check for continuity between the door multiplex control unit 37P connector terminals No. 28 and No. 29.

DOOR MULTIPLEX CONTROL UNIT 37P CONNECTOR

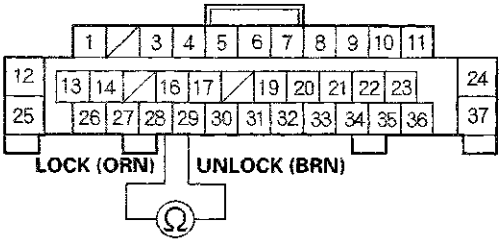

Wire side of female terminals

Is there continuity?

YES—Repair a short between the LOCK and UNLOCK wires.■

NO—Substitute a known-good power window master switch. If the symptom goes away, replace the original power window master switch. If not, replace the driver's door lock actuator.■

DTC B1128: Driver's Door Lock Switch Signal Error (LOCK/UNLOCK)

NOTE: If you are troubleshooting multiple DTCs, be sure to follow the instructions in B-CAN System Diagnosis Test Mode A (see page 22-120).

1. Clear the DTCs with the HDS.

2. Lock and unlock the driver's door with the driver's door lock switch.

3. Check for DTCs with the HDS.

   Is DTC B1128 indicated?

   YES—Go to step 4.

   NO—Intermittent failure, the system is OK at this time. Check for loose or poor connection.■

4. With the driver's door lock switch in the neutral position, select DOOR LOCK from the BODY ELECTRICAL system select menu, and enter DATA LIST.

5. Check the ON/OFF information of the DRIVER'S DOOR LOCK SWITCH (LOCK) and DRIVER'S DOOR LOCK SWITCH (UNLOCK).

   Are both information indicators OFF?

   YES—Go to step 6.

   NO—Replace the power window master switch.■

6. Operate the driver's door lock switch in the LOCK and UNLOCK position, and check the ON/OFF information of the DRIVER'S DOOR LOCK SWITCH (LOCK) and DRIVER'S DOOR LOCK SWITCH (UNLOCK).

   Are both DRIVER'S DOOR LOCK SWITCH (LOCK) and DRIVER'S DOOR LOCK SWITCH (UNLOCK) information indicators ON at the same time when the door lock switch is in the LOCK or UNLOCK position?

   YES—Replace the power window master switch.■

   NO—Intermittent failure, the system is OK at this time. Check for loose or poor connections.■

DTC Troubleshooting (cont'd)

DTC B1129: Driver's Door Lock Knob Switch Signal Error (LOCK/UNLOCK)

NOTE: If you are troubleshooting multiple DTCs, be sure to follow the instructions in B-CAN System Diagnosis Test Mode A (see page 22-120).

1. Clear the DTCs with the HDS.
2. Turn the ignition switch to LOCK (0) and then back to ON (II).
3. Operate the driver's door lock knob switch several times.
4. Check for DTCs with the HDS.

   Is DTC B1129 indicated?

   YES—Go to step 5.

   NO—Intermittent failure, the driver's door lock knob switch system is OK at this time. Check for loose or poor connections.■

5. Select KEYLESS from the BODY ELECTRICAL menu, and enter the DATA LIST.
6. Check the ON/OFF information of the DRIVER'S DOOR LOCK KNOB SWITCH (LOCK) and the DRIVER'S DOOR LOCK KNOB SWITCH (UNLOCK).

   Is the DRIVER'S DOOR LOCK KNOB SWITCH (LOCK) information indicator ON and the DRIVER'S DOOR LOCK KNOB SWITCH (UNLOCK) information indicator OFF with the driver's door lock knob switch in LOCK position, and is the DRIVER'S DOOR LOCK KNOB SWITCH (LOCK) information indicator OFF and the DRIVER'S DOOR LOCK KNOB SWITCH (UNLOCK) information indicator ON with the driver's door lock knob switch in UNLOCK position?

   YES—Replace the power window master switch (see page 22-275).■

   NO—Go to step 7.

7. Disconnect the driver's door lock actuator 10P connector.
8. Check the ON/OFF information of the DRIVER'S DOOR LOCK KNOB SWITCH (LOCK) and DRIVER'S DOOR LOCK KNOB SWITCH (UNLOCK) in the DATA LIST.

   Are both information indicators OFF?

   YES—Go to step 12.

   NO—Go to step 9.

9. Turn the ignition switch to LOCK (0).
10. Disconnect the door multiplex control unit 37P connector.
11. Check for continuity between the door multiplex control unit 37P connector terminals No. 30, No. 31 and body ground individually.

DOOR MULTIPLEX CONTROL UNIT 37P CONNECTOR

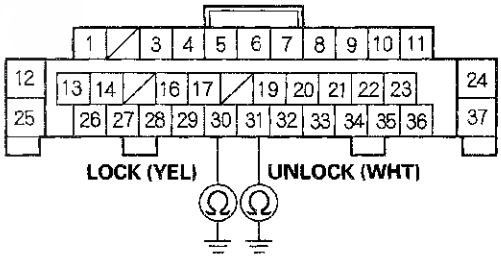

Wire side of female terminals

Is there continuity?

YES—Repair a short to ground in the LOCK or UNLOCK wire.■

NO—Replace the power window master switch (see page 22-275).■

12. Check for continuity between the door multiplex control unit 37P connector terminals No. 30 and No. 31.

DOOR MULTIPLEX CONTROL UNIT 37P CONNECTOR

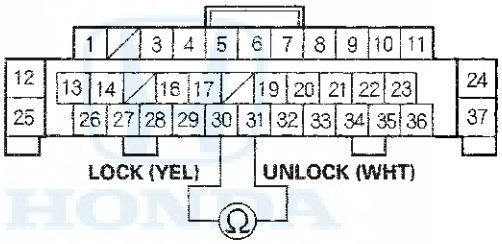

Wire side of female terminals

Is there continuity?

YES—Repair a short between the LOCK and UNLOCK wires. ■

NO—Check for an open in the driver's door lock switch (LOCK) wire or the driver's door lock knob switch (UNLOCK) wire between the door multiplex control unit and the driver's door lock knob switch. If OK, replace the driver's door lock actuator. ■

Symptom Troubleshooting

Power Door Locks/Keyless

1. Check for B-CAN DTCs. If any B-CAN DTCs are indicated, troubleshoot and resolve them first.
2. If the door lock system and the keyless operation do not work, troubleshoot the door locks first.

NOTE: The system does not function when the ignition switch is ON (II).

No.	Symptom	Check Items
1	All the doors will not lock or unlock.*	• Poor ground (G501, G502, G505, G601, G651) • Driver's door key cylinder switch test (see page 22-173). • Door switch test (check the door switch ON/OFF information with the HDS) • Door lock switch test (check the door switch ON/OFF information with the HDS) • Also, check for continuity of the UART line between the door multiplex control unit 37P connector No. 27 terminal and the front passenger's power window switch 37P connector No. 29 terminal.
2	Driver's and left rear (4-door) doors will not lock or unlock.	• Poor ground (G501, G502, G505, G601) • Blown No. 24 (20 A) fuse in the driver's under-dash fuse/relay box • Blown No. 25 (10 A) fuse in the driver's under-dash fuse/relay box • Driver's MICU input test (see page 22-138). • Door multiplex control unit input test (see page 22-167).
3	Front passenger's and right rear (4-door) doors will not lock or unlock.	• Poor ground (G501, G502, G505, G601) • Blown No. 1 (AS F/B) (40 A) fuse in the under-hood fuse/relay box • Blown No. 10 (10 A) fuse in the passenger's under-dash fuse/relay box • Blown No. 13 (20 A) fuse in the passenger's under-dash fuse/relay box • Passenger's MICU input test (see page 22-142). • Door multiplex control unit input test (see page 22-167).
4	Keyless operation does not work (LOCK, UNLOCK, PANIC).	Symptom troubleshooting (see page 22-160).
5	Doors will not unlock with the transmitter, but will unlock with the door lock switch and the door key cylinder switch.	• Symptom troubleshooting (see page 22-160). • Door lock switch test (check the door switch ON/OFF information with the HDS)
6	Doors will not lock with the transmitter, but will lock with the door lock switch and the door key cylinder switch.	• Symptom troubleshooting (see page 22-160). • Door lock switch test (check the door switch ON/OFF information with the HDS)
7	Doors automatically relock 30 seconds after being unlocked with the transmitter even though a door has been opened.	Symptom troubleshooting (see page 22-159).
8	Only driver's door will unlock or door locks relock immediately after unlocking with the remote.	Driver's door lock knob switch test (see page 22-172).
9	The horn does not sound when PANIC button on the transmitter pressed (USA only).	Symptom troubleshooting (see page 22-159).
10	Keyless operation will work even though the ignition key is in the ignition switch.	Ignition key switch test (see page 22-247).

*: If only one door is not working properly, check that door's lock actuator first, then check the other items listed in this table.

The horn does not sound and/or the headlights do not flash when the PANIC button on the transmitter is pressed

NOTE: Before troubleshooting, check the B-CAN DTCs. If any DTC is indicated, troubleshoot the indicated DTC first.

1. Press the PANIC button.

   Do the horns sound?

   YES—Go to step 3.

   NO—Go to step 2.

2. Press the horn button.

   Do the horns sound?

   YES—Go to step 3.

   NO—Do the horn switch test (see page 22-180). ■

3. Turn the headlight switch to ON (II).

   Do the headlights come on?

   YES—Go to step 4.

   NO—Check the lighting circuit. ■

4. Do the transmitter test (see page 22-175).

   Is the transmitter OK?

   YES—Substitute a known-good immobilizer-keyless control unit and recheck. If there is still a problem, substitute a known-good driver's MICU and recheck. If the problem goes away, replace the original immobilizer-keyless control unit or MICU. ■

   NO—Replace the transmitter. ■

Doors automatically relock 30 seconds after being unlocked with the transmitter even though a door has been opened

NOTE:
- Before troubleshooting, check the B-CAN DTCs. If any DTC is indicated, troubleshoot the indicated DTC first.
- The driver's door switch and the left rear door switch are connected to the driver's MICU, and the front passenger's door switch and the right rear door switch are connected to the passenger's MICU.

1. Place the ceiling light switch in the DOOR position.

2. Turn the ignition switch to ON (II).

3. Watch the ceiling light and the door indicators on the gauge control module.

   Do the ceiling light and door indicators come on when each door is opened, and go off when each door is closed?

   YES—Substitute a known-good driver's (or passenger's) MICU and recheck. If the symptom goes away, replace the original MICU. ■

   NO—Repair an open in the wire between the driver's (or passenger's) MICU and each door switch. If the wire is OK, replace the door switch. ■

Symptom Troubleshooting (cont'd)

Keyless operation does not work (LOCK, UNLOCK, PANIC)

NOTE:
- Before troubleshooting, check the B-CAN DTCs. If any DTC is indicated, troubleshoot the indicated DTC first.
- Before troubleshooting, do the keyless transmitter test (see page 22-175).

1. Turn the ignition switch to ON (II).
2. Try to start the engine.

   Does the engine start?

   YES—The immobilizer system is OK, go to step 3.

   NO—Go to the immobilizer symptom troubleshooting (see page 22-394). ■
3. Turn the ignition switch to LOCK (0).
4. Test the transmitter (see page 22-175).

   Is the transmitter OK?

   YES—Replace the immobilizer-keyless control unit. ■

   NO—Replace the transmitter. ■

Doors will not unlock (or lock) with the transmitter, but will unlock (lock) with the door switch

NOTE: Before troubleshooting, check the B-CAN DTCs. If any DTC is indicated, troubleshoot the indicated DTC first.

1. Turn the ignition switch to LOCK (0).
2. Remove the ignition key from the ignition switch.
3. Close and lock the doors.
4. Try to lock/unlock the doors with the keyless transmitter.

   Do the door lock actuators work normally?

   YES—Intermittent failure, the system is OK at this time. ■

   NO—Go to step 5.
5. Open the driver's door.

   Does the key-in reminder chime sound?

   YES—Faulty ignition key switch, or short to ground on the ignition switch wire. Repair as necessary. ■

   NO—Go to step 6.
6. Do the transmitter test (see page 22-175).

   Is the transmitter OK?

   YES—Substitute a known-good driver's under-dash fuse/relay box and recheck. If there is still a problem, substitute a known-good immobilizer-keyless control unit and recheck. If the problem goes away, replace the original immobilizer-keyless control unit. ■

   NO—Replace the transmitter. ■

Control Unit Input Test

NOTE: Before testing, troubleshoot the multiplex integrated control unit first, using B-CAN System Diagnosis Test Mode A (see page 22-120), and make sure the lighting system works properly.

Driver's MICU

1. Turn the ignition switch to LOCK (0), and remove the driver's dashboard lower cover.
2. Disconnect driver's under-dash fuse/relay box connectors D, F, G, N, Q, and R.

   NOTE: All connector views are wire side of female terminals.

CONNECTOR D (16P)

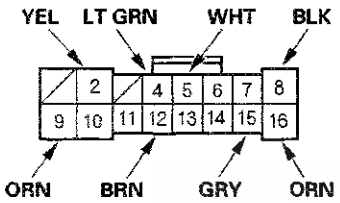

CONNECTOR N (16P)

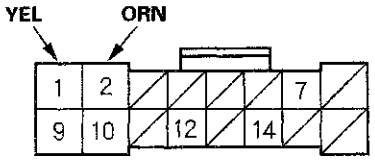

CONNECTOR F (33P)

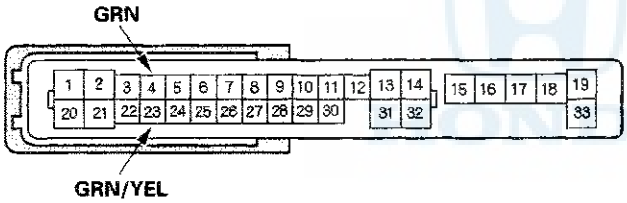

CONNECTOR Q (20P)

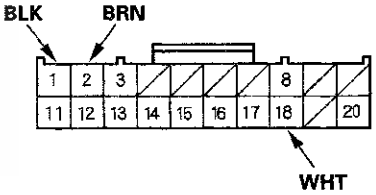

CONNECTOR G (13P)

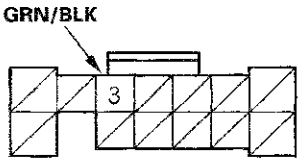

CONNECTOR R (24P)

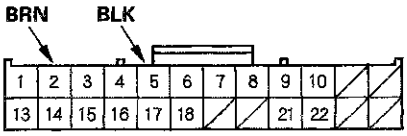

3. Inspect the connector and socket terminals to be sure they are all making good contact.
   - If the terminals are bent, loose or corroded, repair them as necessary and recheck the system.
   - If the terminals look OK, go to step 4.

(cont'd)

Control Unit Input Test (cont'd)

4. Reconnect connector F, and make these input tests at the connectors.

   - If any test indicates a problem, find and correct the cause, then recheck the system.
   - If all the input tests prove OK, go to step 5.

   NOTE: Before testing, make sure the No. 15 (10 A) fuse in the under-hood fuse/relay box is OK.

Cavity	Wire	Test condition	Test: Desired result	Possible cause if desired result is not obtained
D2 (4-door)	YEL	Connect terminal F11 to terminal D2 (or D9), and terminal D9 (or D2) to body ground.	Check actuator operation: The left rear door lock actuator should UNLOCK (or LOCK).	• Faulty left rear door lock actuator • An open in the wire
D9 (4-door)	ORN			
D16	ORN	Connect terminal F11 to terminal D16 momentarily	Check actuator operation: The trunk lid release actuator should work.	• Poor ground (G602) • Faulty trunk lid release actuator • An open in the wire
F23	GRN/YEL	Under all conditions	Attach to ground: The horns should sound.	• Blown No. 10 (20 A) fuse in the under-hood fuse/relay box • Faulty horn relay • Faulty horn • An open in the wire
N1	YEL	Connect terminal F11 to terminal N1 (or N2), and terminal N2 (or N1) to body ground.	Check actuator operation: The driver's door lock actuator should UNLOCK (or LOCK).	• Faulty driver's door lock actuator • An open in the wire
N2	ORN			

5. Reconnect the remaining connectors to the driver's under-dash fuse/relay box, and make these input tests at the connectors.

   - If any test indicates a problem, find and correct the cause, then recheck the system.
   - If all the input tests prove OK, go to step 6.

Cavity	Wire	Test condition	Test: Desired result	Possible cause if desired result is not obtained
D8	BLK	Under all conditions	Measure the voltage to ground: There should be less than 0.5 V.	• Poor ground (G601) • An open in the wire
Q1	BLK	Under all conditions	Measure the voltage to ground: There should be less than 0.5 V.	• Poor ground (G502) • An open in the wire
Q2	BRN	Under all conditions	Measure the voltage to ground: There should be less than 0.5 V.	• Poor ground (G501) • An open in the wire
R2	BRN	Under all conditions	Measure the voltage to ground: There should be less than 0.5 V.	• Poor ground (G501) • An open in the wire
R5	BLK	Under all conditions	Measure the voltage to ground: There should be less than 0.5 V.	• Poor ground (G502) • An open in the wire
D4 (4-door)	LT GRN	Left rear door open	Measure the voltage to ground: There should be less than 1 V.	• Faulty left rear door switch • An open in the wire
		Left rear door closed	Measure the voltage to ground: There should be more than 5 V.	• Faulty left rear door switch • A short to ground in the wire
D5	WHT	Trunk lid open	Measure the voltage to ground: There should be less than 1 V.	• Faulty trunk lid latch switch • Poor ground (G602) • An open in the wire
		Trunk lid closed	Measure the voltage to ground: There should be more than 5 V.	• Faulty trunk lid latch switch • A short to ground in the wire
D12	BRN	Driver's door open	Measure the voltage to ground: There should be less than 1 V.	• Faulty driver's door switch • An open in the wire
		Driver's door closed	Measure the voltage to ground: There should be more than 5 V.	• Faulty driver's door switch • A short to ground in the wire
D15	GRY	Left rear door lock knob switch in UNLOCK	Measure the voltage to ground: There should be less than 1 V.	• Poor ground (G601) • Faulty left rear door lock knob switch • An open in the wire
		Left rear door lock knob switch in LOCK	Measure the voltage to ground: There should be more than 5 V.	• Faulty left rear door lock knob switch • A short to ground in the wire
G3	GRN/ BLK	Hood open	Measure the voltage to ground: There should be less than 1 V.	• Faulty hood switch • Poor ground (G302) • An open in the wire
		Hood closed	Measure the voltage to ground: There should be more than 5 V.	• Faulty hood switch • A short to ground in the wire
Q18	WHT	Ignition key inserted into the ignition switch	Measure the voltage to ground: There should be less than 1 V.	• Faulty ignition key switch • Poor ground (G503) • An open in the wire
		Ignition switch LOCK (0), and the ignition key removed from the ignition switch	Measure the voltage to ground: There should be more than 5 V.	• Faulty ignition key switch • A short to ground in the wire

(cont'd)

Control Unit Input Test (cont'd)

Passenger's MICU

6. Turn the ignition switch to LOCK (0), and remove the right kick panel.

   - 2-door (see page 20-97)
   - 4-door (see page 20-99)

7. Disconnect passenger's under-dash fuse/relay box connectors A and G*1 (or H*2).
   * 1: LX, LX PZEV, LX-P, LX-P PZEV, LX-S, LX-S PZEV
   * 2: Except LX, LX PZEV, LX-P, LX-P PZEV, LX-S, LX-S PZEV

   NOTE: All connector views are wire side of female terminals.

CONNECTOR A (33P)

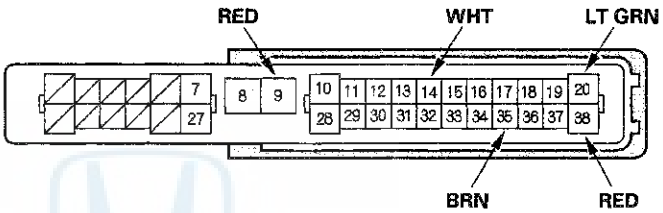

CONNECTOR G (16P) (LX, LX PZEV, LX-P, LX-P PZEV, LX-S, LX-S PZEV)

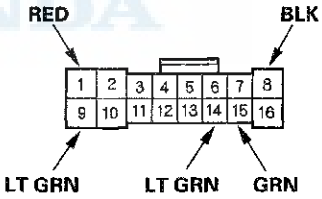

CONNECTOR H (38P) (Except LX, LX PZEV, LX-P, LX-P PZEV, LX-S, LX-S PZEV)

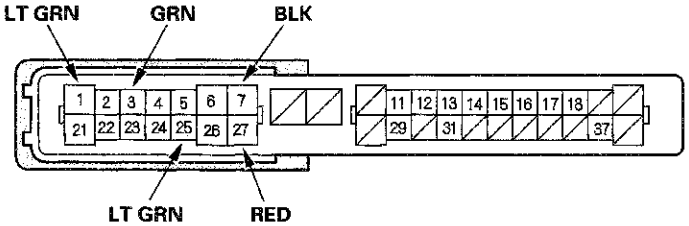

8. Inspect the connector and socket terminals to be sure they are all making good contact.

   - If the terminals are bent, loose or corroded, repair them as necessary and recheck the system.
   - If the terminals look OK, go to step 9.

9. With the connectors still disconnected, make these input tests at the connectors.

- If any test indicates a problem, find and correct the cause, then recheck the system.
- If all the input tests prove OK, go to step 10.

NOTE: Before testing, make sure the No. 15 (10 A) fuse in the under-hood fuse/relay box is OK.

Cavity	Wire	Test condition	Test: Desired result	Possible cause if desired result is not obtained
A20	LT GRN	Connect terminal A14 to terminal A20 (or A38), and terminal A38 (or A20) to body ground.	Check actuator operation: The front passenger's door lock actuator should UNLOCK (or LOCK).	• Faulty front passenger's door lock actuator • An open in the wire
A38	RED			
G1*1 (4-door)	RED	Connect terminal A14 to terminal G1 (or G9), and terminal G9 (or G1) to body ground.	Check actuator operation: The right rear door lock actuator should LOCK (or UNLOCK).	• Faulty right rear door lock actuator • An open in the wire
G9*1 (4-door)	LT GRN			
H27*2 (4-door)	RED	Connect terminal A14 to terminal H27 (or H1), and terminal H1 (or H27) to body ground.	Check actuator operation: The right rear door lock actuator should LOCK (or UNLOCK).	• Faulty right rear door lock actuator • An open in the wire
H1*2 (4-door)	LT GRN			

* 1: LX, LX PZEV, LX-P, LX-P PZEV, LX-S, LX-S PZEV
* 2: Except LX, LX PZEV, LX-P, LX-P PZEV, LX-S, LX-S PZEV

(cont'd)

Control Unit Input Test (cont'd)

10. Reconnect the connectors to the passenger's under-dash fuse/relay box, and make these input tests at the connectors.

- If any test indicates a problem, find and correct the cause, then recheck the system.
- If all the input tests prove OK, go to step 11.

Cavity	Wire	Test condition	Test: Desired result	Possible cause if desired result is not obtained
A9	RED	Under all conditions	Measure the voltage to ground: There should be battery voltage.	• Blown No. 1 (AS F/B) (40 A) fuse in the under-hood fuse/relay box • Faulty driver's under-dash fuse/relay box • An open in the wire
A14	WHT	Under all conditions	Measure the voltage to ground: There should be battery voltage.	• Blown No. 15 (10 A) fuse in the under-hood fuse/relay box • Faulty driver's under-dash fuse/relay box • An open in the wire
A35	BRN	Ignition switch ON (II)	Measure the voltage to ground: There should be battery voltage.	• Blown No. 5 (7.5 A) fuse in the driver's under-dash fuse/relay box • Faulty driver's under-dash fuse/relay box • An open in the wire
G8*1 H7*2	BLK	Under all conditions	Measure the voltage to ground: There should be less than 0.5 V.	• Poor ground (G651) • An open in the wire
G14*1 (4-door)	LT GRN	Right rear door open	Measure the voltage to ground: There should be less than 1 V.	• Faulty right rear door switch • An open in the wire
H25*2 (4-door)		Right rear door closed	Measure the voltage to ground: There should be more than 5 V.	• Faulty right rear door switch • A short to ground in the wire
G15*1	GRN	Front passenger's door open	Measure the voltage to ground: There should be less than 1 V.	• Faulty front passenger's door switch • An open in the wire
H3*2		Front passenger's door closed	Measure the voltage to ground: There should be more than 5 V.	• Faulty front passenger's door switch • A short to ground in the wire

* 1: LX, LX PZEV, LX-P, LX-P PZEV, LX-S, LX-S PZEV
* 2: Except LX, LX PZEV, LX-P, LX-P PZEV, LX-S, LX-S PZEV

Door Multiplex Control Unit

11. Turn the ignition switch to LOCK (0), and open and close the driver's door, then remove the power window master switch.

    - 2-door (see page 22-275)
    - 4-door (see page 22-275)

12. Disconnect the 37P connector from the door multiplex control unit.

DOOR MULTIPLEX CONTROL UNIT 37P CONNECTOR

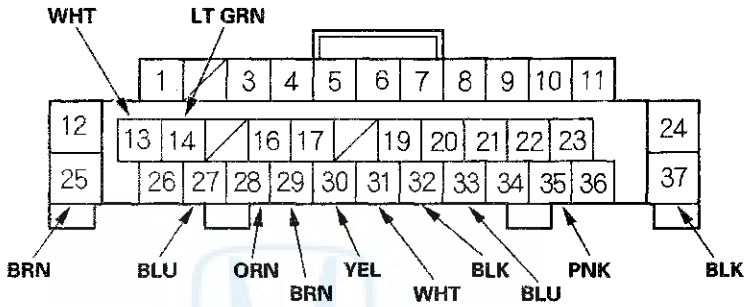

Wire side of female terminals

13. Inspect the connector and socket terminals to be sure they are all making good contact.

    - If the terminals are bent, loose or corroded, repair them as necessary and recheck the system.
    - If the terminals look OK, go to step 14.

(cont'd)

Control Unit Input Test (cont'd)

14. With the connector still disconnected, make these input tests at the connector.

- If any test indicates a problem, find and correct the cause, then recheck the system.
- If the input test proves OK, go to step 15.

Cavity	Wire	Test condition	Test: Desired result	Possible cause if desired result is not obtained
27	BLU	Disconnect the front passenger's power window switch 37P connector	Check for continuity between the door multiplex control unit 37P connector terminal No. 27 and the front passenger's power window switch 37P connector terminal No. 29: There should be continuity.	An open in the wire
			Check for continuity to ground: There should be no continuity.	A short in the wire
33	BLU	Disconnect the driver's under-dash fuse/ relay box connector P (20P)	Check for continuity between the door multiplex control unit 37P connector terminal No. 33 and the driver's under-dash fuse/relay box connector P (20P) terminal No. 5: There should be continuity.	An open in the wire
			Check for continuity to ground: There should be no continuity.	A short in the wire
35	PNK	Disconnect the driver's under-dash fuse/ relay box connector P (20P)	Check for continuity between the door multiplex control unit 37P connector terminal No. 35 and the driver's under-dash fuse/relay box connector P (20P) terminal No. 6: There should be continuity.	An open in the wire
			Check for continuity to ground: There should be no continuity.	A short in the wire

15. Reconnect the 37P connector to the door multiplex control unit, and make these input tests at the connector.

- If any test indicates a problem, find and correct the cause, then recheck the system.
- If all the input tests prove OK, go to step 16.

Cavity	Wire	Test condition	Test: Desired result	Possible cause if desired result is not obtained
32	BLK	Under all conditions	Measure the voltage to ground: There should be less than 0.5 V.	• Poor ground (G501) • An open in the wire
37	BLK	Under all conditions	Measure the voltage to ground: There should be less than 0.5 V.	• Poor ground (G502) • An open in the wire
13	WHT	Under all conditions	Measure the voltage to ground: There should be battery voltage.	• Blown No. 15 (10 A) fuse in the under-hood fuse/relay box • Faulty driver's under-dash fuse/relay box • An open in the wire
14	LT GRN	Ignition switch ON (II)	Measure the voltage to ground: There should be battery voltage.	• Blown No. 16 (7.5 A) fuse in the driver's under-dash fuse/relay box • Faulty driver's under-dash fuse/relay box • An open in the wire
25	BRN	Under all conditions	Measure the voltage to ground: There should be battery voltage.	• Blown No. 24 (20 A) fuse in the driver's under-dash fuse/relay box • Faulty driver's under-dash fuse/relay box • An open in the wire
28	ORN	Driver's door key cylinder switch in LOCK	Measure the voltage to ground: There should be less than 1 V.	• Poor ground (G501) • Faulty driver's key cylinder switch • An open in the wire
		Driver's door key cylinder switch in UNLOCK	Measure the voltage to ground: There should be more than 5 V.	• Faulty driver's key cylinder switch • A short to ground in the wire
29	BRN	Driver's door key cylinder switch in UNLOCK	Measure the voltage to ground: There should be less than 1 V.	• Poor ground (G501) • Faulty driver's door key cylinder switch • An open in the wire
		Driver's door key cylinder switch in neutral or LOCK	Measure the voltage to ground: There should be more than 5 V.	• Faulty driver's door key cylinder switch • A short to ground in the wire
30	YEL	Driver's door lock knob switch in LOCK	Measure the voltage to ground: There should be less than 1 V.	• Poor ground (G501) • Faulty driver's door lock knob switch • An open in the wire
		Driver's door lock knob switch in neutral or UNLOCK	Measure the voltage to ground: There should be more than 5 V.	• Faulty driver's door lock knob switch • A short to ground in the wire
31	WHT	Driver's door lock knob switch in UNLOCK	Measure the voltage to ground: There should be less than 1 V.	• Poor ground (G501) • Faulty driver's door lock knob switch • An open in the wire
		Driver's door lock knob switch in neutral or LOCK	Measure the voltage to ground: There should be more than 5 V.	• Faulty driver's door lock knob switch • A short to ground in the wire

(cont'd)

Control Unit Input Test (cont'd)

Front Passenger's Power Window Switch

16. Turn the ignition switch to LOCK (0), and remove the front passenger's power window switch.

    - 2-door (see page 22-276)
    - 4-door (see page 22-276)

17. Disconnect the 37P connector from the front passenger's power window switch.

FRONT PASSENGER'S POWER WINDOW SWITCH 37P CONNECTOR

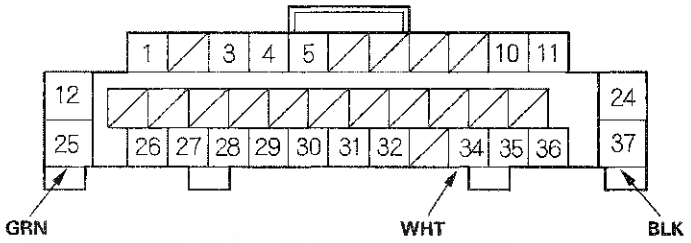

Wire side of female terminals

18. Inspect the connector and socket terminals to be sure they are all making good contact.

    - If the terminals are bent, loose or corroded, repair them as necessary and recheck the system.
    - If the terminals look OK, go to step 19.

19. Reconnect the 37P connector to the front passenger's power window switch, and do these input tests at the following connector.

    - If any test indicates a problem, find and correct the cause, then recheck the system.
    - If all the input tests prove OK, go to step 20.

Cavity	Wire	Test condition	Test: Desired result	Possible cause if desired result is not obtained
37	BLK	Under all conditions	Measure the voltage to ground: There should be less than 0.5 V.	• Poor ground (G505) • An open in the wire
25	GRN	Under all conditions	Measure the voltage to ground: There should be battery voltage.	• Blown No. 13 (20 A) fuse in the passenger's under-dash fuse/relay box • An open in the wire
34	WHT	Front passenger's door lock knob switch in UNLOCK	Measure the voltage to ground: There should be less than 1 V.	• Poor ground (G505) • Faulty front passenger's door lock knob switch • An open in the wire
		Front passenger's door lock knob switch in neutral or LOCK	Measure the voltage to ground: There should be more than 5 V.	• Faulty front passenger's door lock knob switch • A short to ground in the wire

20. If multiple failures are found on more than one control unit, replace the driver's under-dash fuse/relay box (includes the driver's MICU) (see page 22-84). If input failures are related to a particular control unit, replace the control unit.

Door Lock Actuator Test

Driver's Door and Left Rear Door (4-door)

1. Remove the door panel.
   - Front (see page 20-16)
   - Rear (see page 20-35)
2. Disconnect the 10P connector (A) from the actuator (B).

   NOTE: The illustration shows the driver's door.

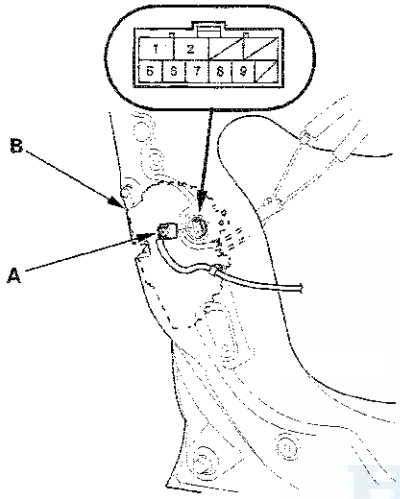

3. Check the actuator operation by connecting power and ground according to the table. To prevent damage to the actuator, apply battery voltage only momentarily.

Position \ Terminal	1	2
LOCK	⊕	⊖
UNLOCK	⊖	⊕

4. If the actuator does not operate as specified, replace it.

Front Passenger's Door and Right Rear Door (4-door)

1. Remove the door panel.
   - Front (see page 20-16)
   - Rear (see page 20-35)
2. Disconnect the 10P connector (A) from the actuator (B).

   NOTE: The illustration shows the front passenger's door.

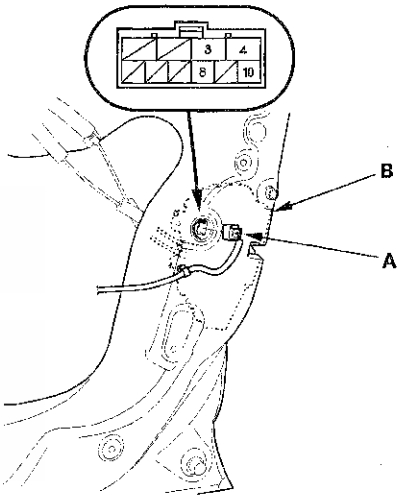

3. Check the actuator operation by connecting power and ground according to the table. To prevent damage to the actuator, apply battery voltage only momentarily.

Position \ Terminal	3	4
LOCK	⊕	⊖
UNLOCK	⊖	⊕

4. If the actuator does not operate as specified, replace it.

Door Lock Knob Switch Test

Driver's Door

1. Remove the driver's door panel (see page 20-16).

2. Disconnect the 10P connector (A) from the door lock actuator (B).

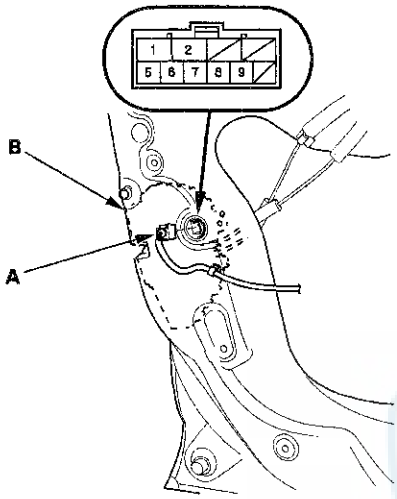

3. Check for continuity between the terminals.

   - There should be continuity between the terminals No. 6 and No. 5 when the door lock knob switch is in the LOCK position and no continuity when the switch is in the UNLOCK position.
   - There should be continuity between the terminals No. 7 and No. 5 when the door lock knob switch is in the UNLOCK position and no continuity when the switch is in the LOCK position.

4. If the continuity is not as specified, replace the door lock actuator.

Passenger Doors (With Security)

1. Remove the passenger's door panel.

   - Front (see page 20-16)
   - Rear (see page 20-35)

2. Disconnect the 10P connector (A) from the door lock actuator (B).

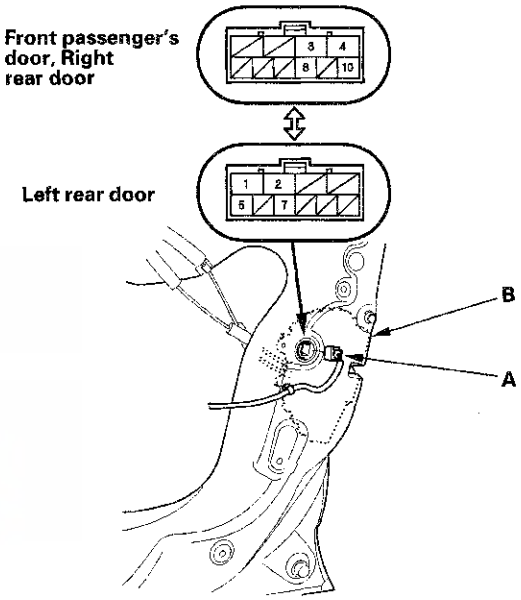

3. Check for continuity between the terminals.
   There should be continuity between the terminals No. 8 [No. 7] and No. 10 [No. 5] when the door lock knob switch in the UNLOCK position and no continuity when the switch is in the LOCK position.
   [ ] : Left rear door

4. If the continuity is not specified, replace the door lock actuator.

Door Key Cylinder Switch Test

1. Remove the driver's door panel (see page 20-16).

2. Disconnect the 10P connector (A) from the door lock actuator (key cylinder switch) (B).

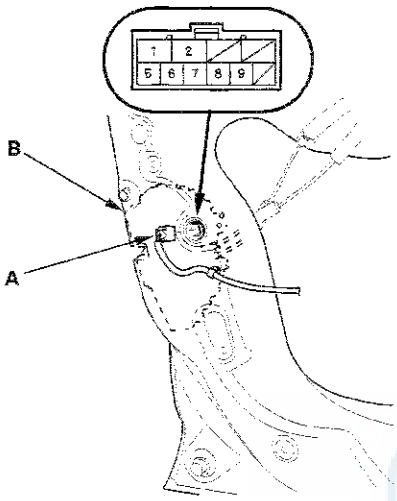

3. Check for continuity between the terminals.

   - There should be continuity between the terminals No. 9 and No. 5 when the door key cylinder switch is in LOCK position. (With security)
   - There should be no continuity between the terminals No. 9 and No. 5 when the door key cylinder switch is in the neutral or UNLOCK position. (With security)
   - There should be continuity between the terminals No. 8 and No. 5 when the door key cylinder switch is in UNLOCK position.
   - There should be no continuity between the terminals No. 8 and No. 5 when the door key cylinder switch is in the neutral or LOCK position.

4. If the continuity is not as specified, replace the door latch/actuator assembly (see page 20-23).

Hood Switch Test

1. Open the hood.

2. Disconnect the 2P connector from the hood switch.

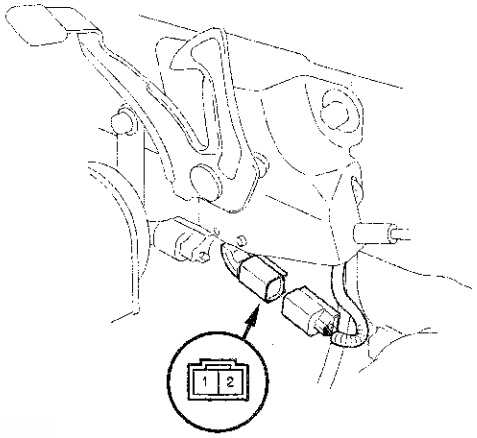

3. Check for continuity between the terminals.

   - There should be continuity between the terminals No. 1 and No. 2 when the hood is opened (latch released).
   - There should be no continuity between the terminals No. 1 and No. 2 when the hood is closed (latch pushed down).

4. If the continuity is not as specified, replace the hood latch assembly (see page 20-285).

Trunk Lid Release Actuator Test

With Keyless Entry

1. Open the trunk lid.
2. Disconnect the 3P connector from the trunk lid latch switch/trunk release actuator.

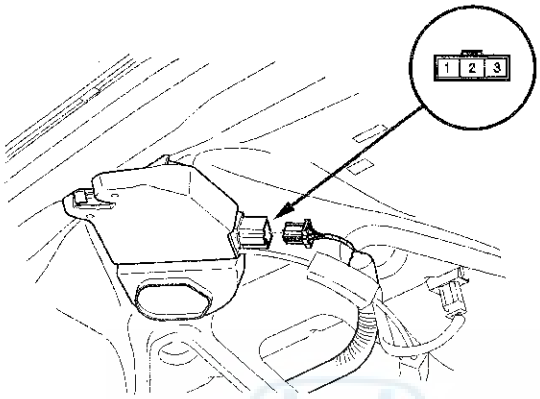

3. Check actuator operation by connecting power to the terminal No. 3 and ground to the terminal No. 2 momentarily. The actuator should work.
4. If the actuator does not work, replace the trunk lid latch switch/release actuator assembly (see page 20-286).

Transmitter Test

NOTE:
- If the doors unlock or lock with the transmitter, but the LED on the transmitter does not come on, the LED is faulty; replace the transmitter.
- If any door is open, you cannot lock the doors with the transmitter.
- If you unlocked the doors with the transmitter, but do not open any of the doors within 30 seconds, the doors relock automatically.
- The doors do not lock or unlock with the transmitter if the ignition key is inserted in the ignition switch.

With HDS

1. Press the lock or unlock button five or six times to reset the transmitter.

   - If the locks work, the transmitter is OK.
   - If any of the transmitter buttons do not work, replace the transmitter, then register the transmitter (see page 22-402).
   - If the locks don't work, go to step 2.

2. Connect the HDS to the data link connector.

3. Select KEYLESS from the BODY ELECTRICAL menu, then select INSPECTION, then KEYLESS CHECK.

4. Press the lock, unlock, or panic button and check the response on the screen of the HDS.

   NOTE: The door lock actuators may or may not cycle when receiving input from the transmitter.

   - If KEYLESS ENTRY TRANSMITTER CODE IS RECEIVED is indicated, the transmitter is OK.
   - If DIFFERENT KEYLESS ENTRY TRANSMITTER CODE IS RECEIVED is indicated, the transmitter is not registered to the vehicle. If necessary, register the transmitter (see page 22-402).
   - If KEYLESS ENTRY TRANSMITTER CODE IS NOT RECEIVED is indicated, go to step 5.

5. Open the transmitter, and check for water damage.

   - If you find any water damage, replace the transmitter, then register it (see page 22-402).
   - If there is no water damage, go to step 6.

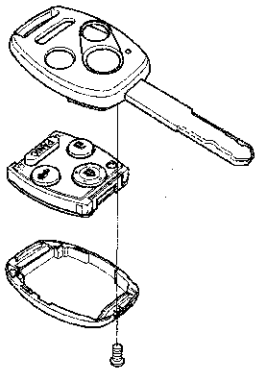

6. Replace the transmitter battery (A) with a new one, and press the lock or unlock button and check the response on the screen of the HDS.

   - If KEYLESS ENTRY TRANSMITTER CODE IS RECEIVED is indicated, the transmitter is OK.
   - If KEYLESS ENTRY TRANSMITTER CODE IS NOT RECEIVED is indicated, go to step 7.

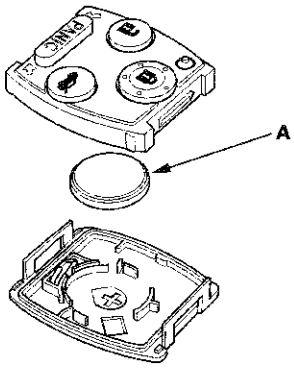

(cont'd)

Transmitter Test (cont'd)

7. Use a different known-good keyless transmitter assembly and repeat steps 3 and 4.

   NOTE: The keyless transmitter does not need to be programmed to the vehicle for this test.

   - If (DIFFERENT) KEYLESS ENTRY TRANSMITTER CODE IS RECEIVED is indicated, replace the keyless transmitter and do the immobilizer system registration (see page 22-402).
   - If KEYLESS ENTRY TRANSMITTER CODE IS NOT RECEIVED is indicated, the immobilizer-keyless control unit is faulty, replace it and do the immobilizer system registration (see page 22-402).

   NOTE: The keyless transmitter is combined with the immobilizer transponder, so when the transponder is registered by the HDS, the keyless transmitter programming is completed automatically.

Without HDS

1. Start the engine.

   - If the engine does not start, go to the immobilizer system troubleshooting (see page 22-394).
   - If the engine starts, go to step 2.

2. Press the lock or unlock button five or six times to reset the transmitter.

   - If the locks work, the transmitter is OK.
   - If the locks don't work, go to step 3.

3. Open the transmitter, and check for water damage.

   - If you find any water damage, replace the transmitter.
   - If there is no water damage, go to step 4.

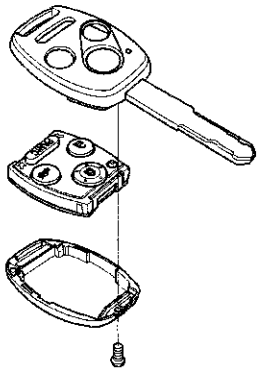

4. Replace the transmitter battery (A) with a new one, and try to lock and unlock the doors with the transmitter by pressing the lock or unlock button five or six times.

   - If the doors lock and unlock, the transmitter is OK.
   - If the doors don't lock and unlock, go to step 5.

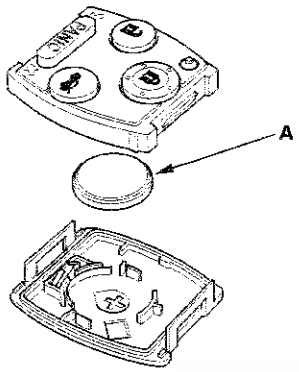

5. Reprogram and register the transmitter (see page 22-402), then try to lock and unlock the doors.

   - If the doors lock and unlock, the transmitter is OK.
   - If the doors don't lock and unlock, substitute a known-good transmitter and recheck (see page 22-402). If still not operating, replace the immobilizer-keyless control unit.

Component Location Index

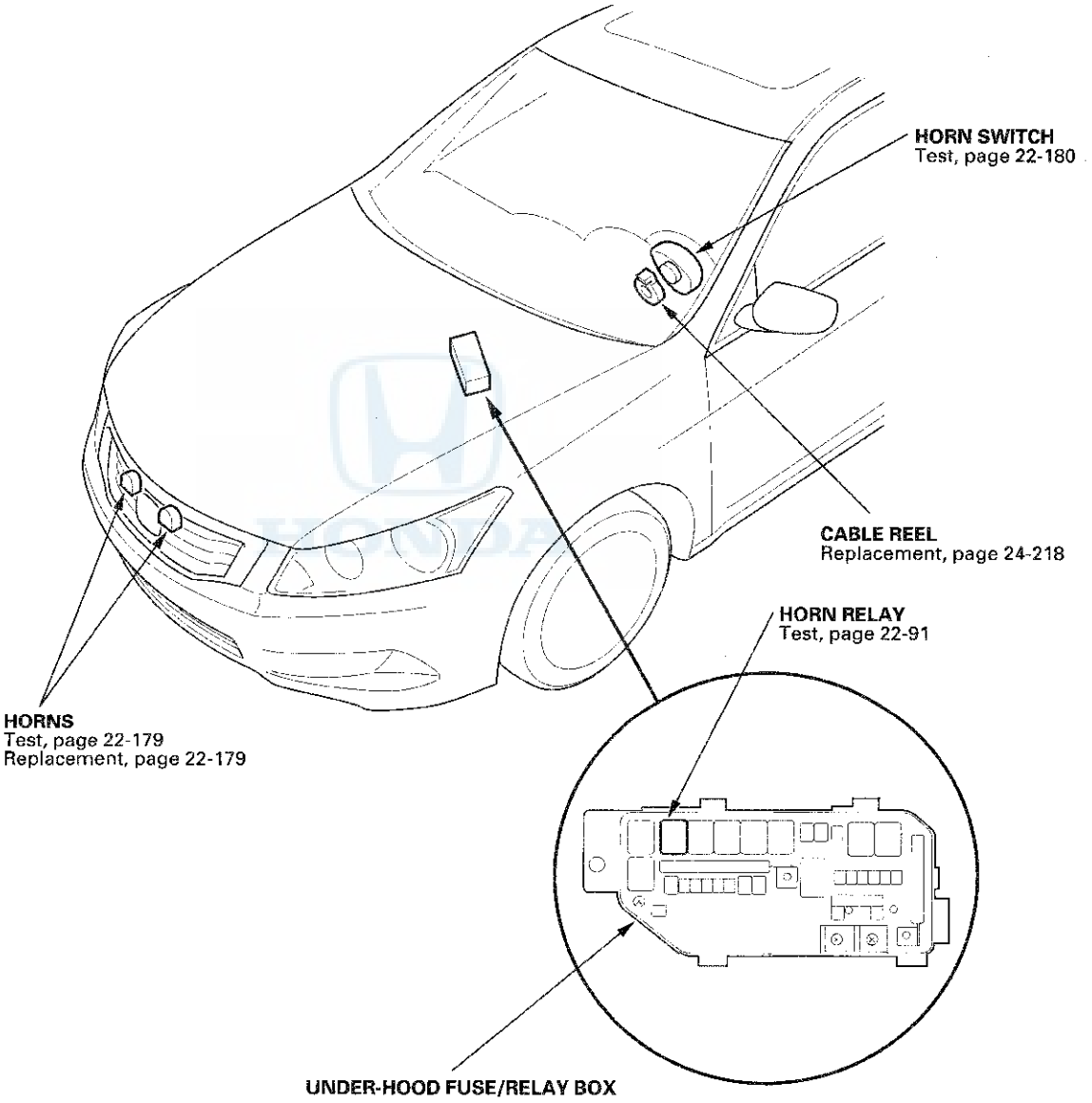

Circuit Diagram

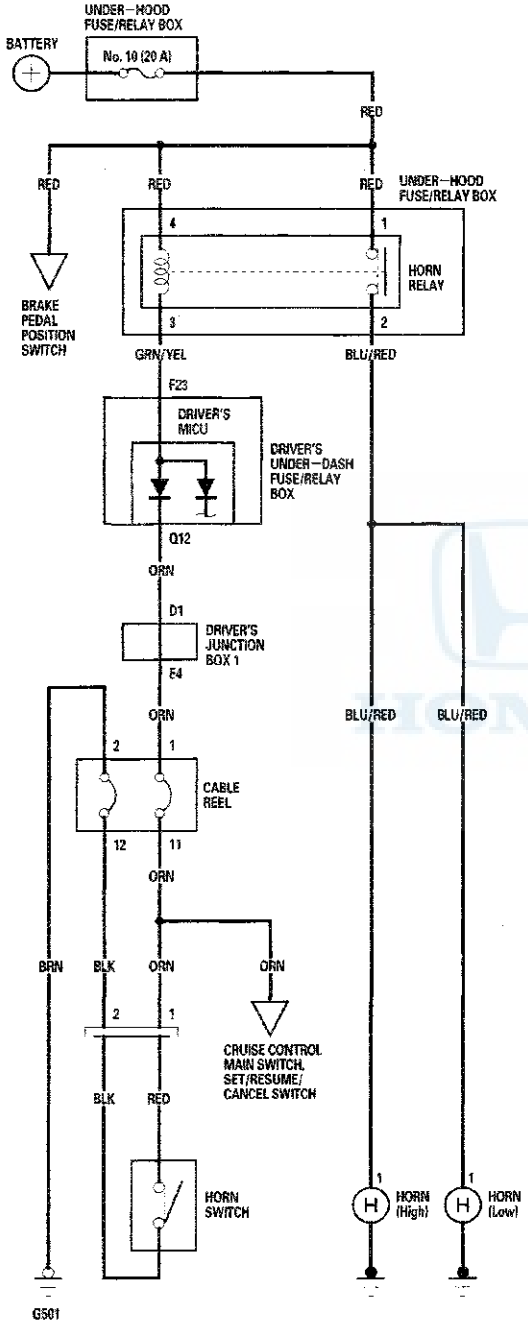

Horn Test/Replacement

1. Remove the grille cover:
   - 2-door (see page 20-257)
   - 4-door (see page 20-257)
2. Disconnect the 1P connector (A) from each horn (B).

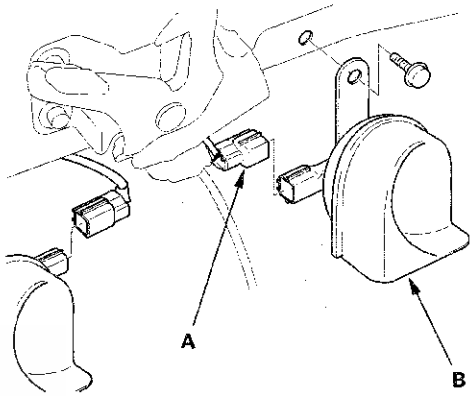

3. Test the horn by connecting battery power to the terminal (A) and grounding the bracket (B). The horn should sound.

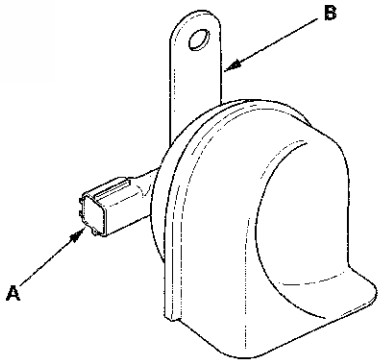

4. If it fails to sound, replace it.

Horn Switch Test

NOTE: Check for a blown No. 10 (20 A) fuse in the under-hood fuse/relay box. If it is blown, check for a faulty horn relay.

1. Turn the steering wheel 180 degrees from the center position and remove the cover (A).

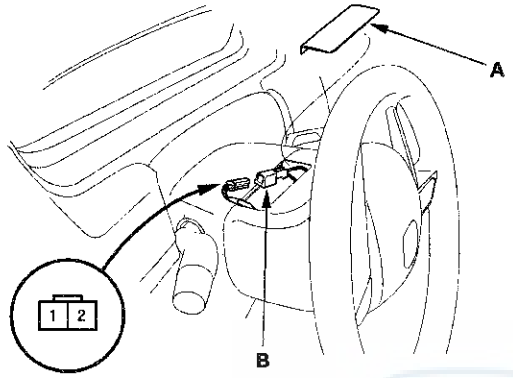

Wire side of female terminals

2. Disconnect the horn switch 2P connector (B).

3. Connect the horn switch 2P connector terminals No. 1 and No. 2 with a jumper wire. The horns should sound.

   - If the horns sound, check or adjust the installation of the driver's airbag assembly and the horn switch plate.
   - If the horns don't sound, go to step 4.

4. Remove the jumper wire from the horn switch 2P connector.

5. Remove the steering column covers (see page 20-168).

6. Remove the driver's airbag assembly (see page 24-205).

7. Disconnect the cable reel subharness 20P connector (A).

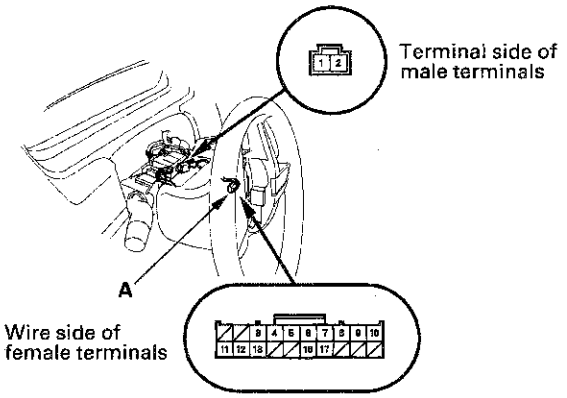

8. Connect the cable reel subharness 20P connector (A) terminals No. 11 and No. 12 with a jumper wire. The horns should sound.

   - If the horns sound, replace the cable reel subharness.
   - If the horns don't sound, go to step 9.

9. Disconnect the dashboard wire harness 20P connector (A).

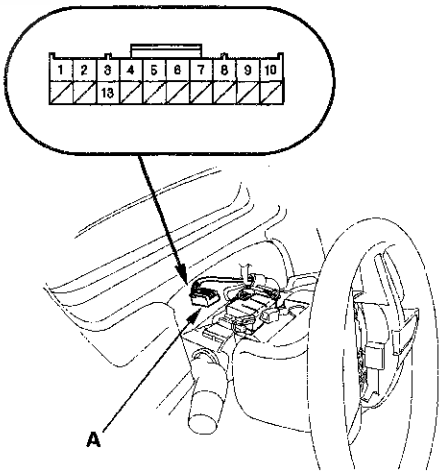

10. Connect the dashboard wire harness 20P connector terminals No. 1 and No. 2 with a jumper wire. The horns should sound.

    - If the horns sound, replace the cable reel.
    - If the horns don't sound, repair an open in the terminal No. 2 or No. 1 wire, or a faulty driver's MICU.

Component Location Index

4-door

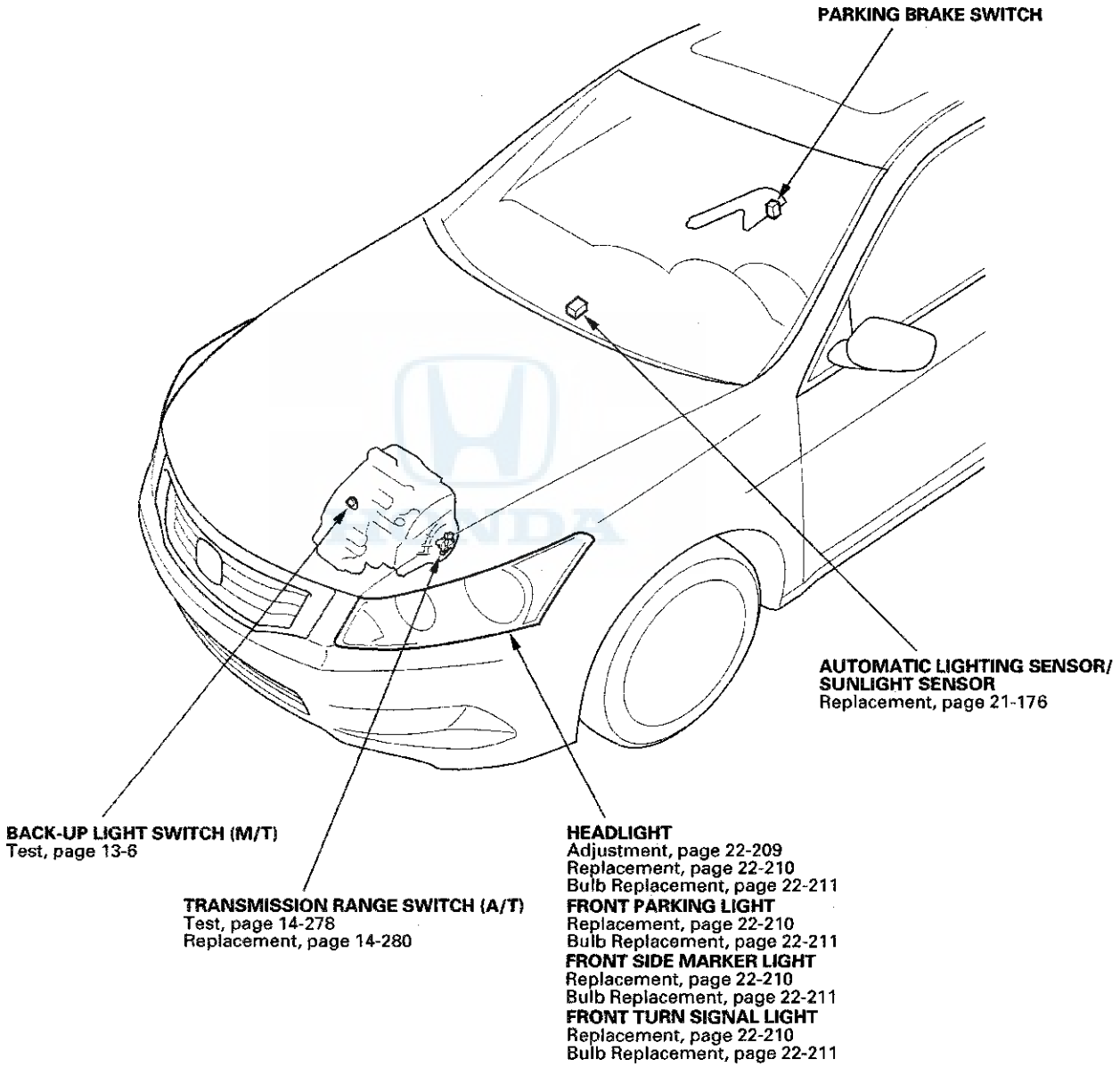

(cont'd)

Component Location Index (cont'd)

4-door

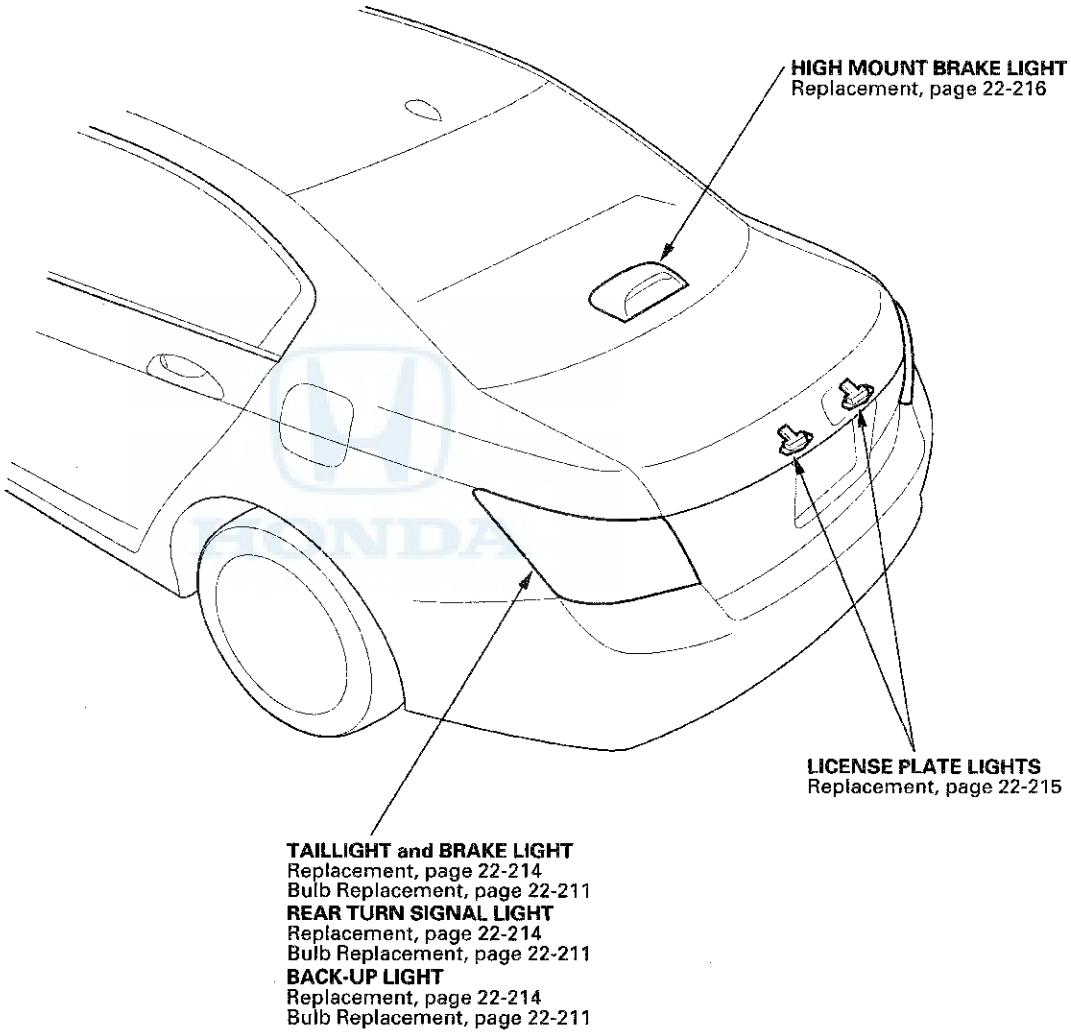

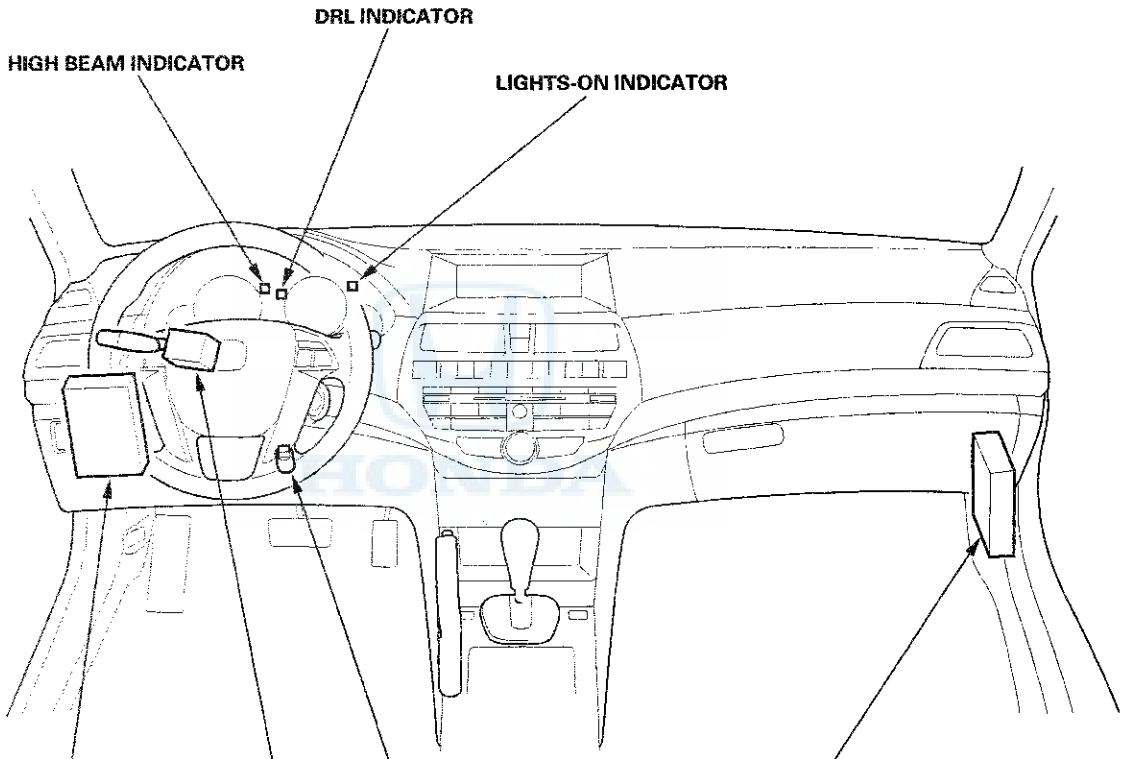
DRL INDICATOR
HIGH BEAM INDICATOR
LIGHTS-ON INDICATOR
BRAKE PEDAL POSITION SWITCH
Test, page 22-216
COMBINATION LIGHT SWITCH
Test/Replacement, page 22-208
DRIVER'S MICU
(Built into the driver's under-dash fuse/relay box)
Input Test, page 22-203
Replacement, page 22-84
PASSENGER'S MICU
(Built into the passenger's under-dash fuse/relay box)
Input Test, page 22-207
Replacement, page 22-87

Component Location Index (cont'd)

2-door

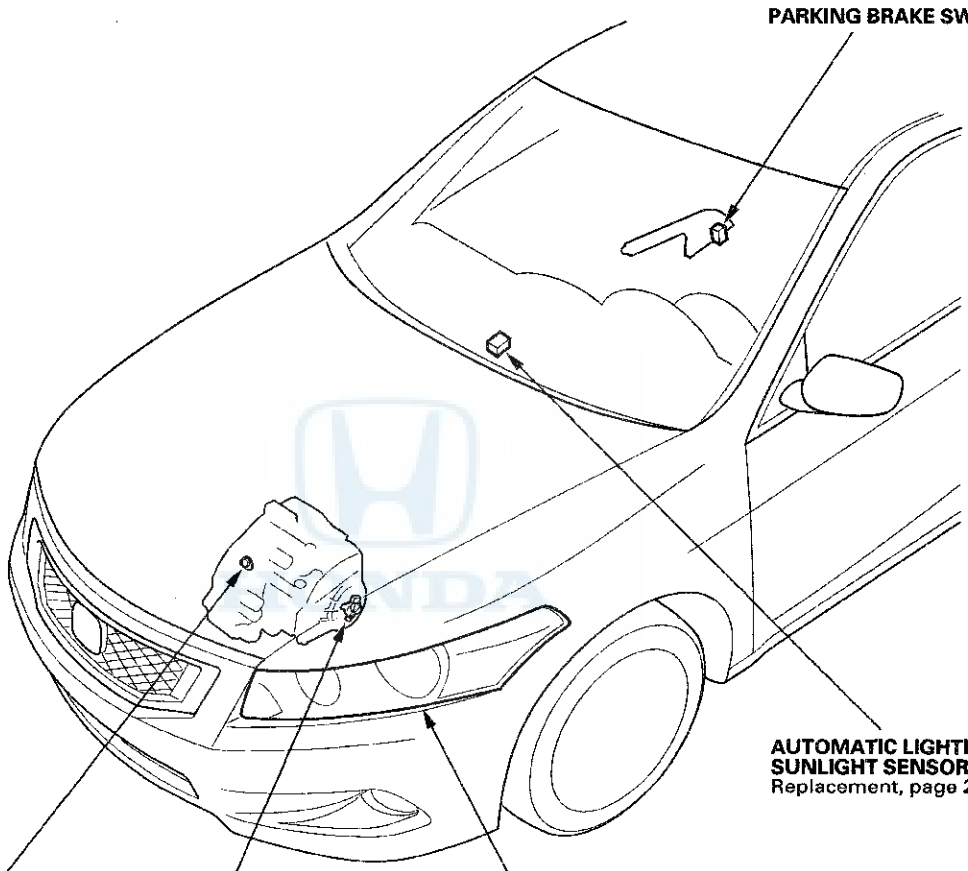

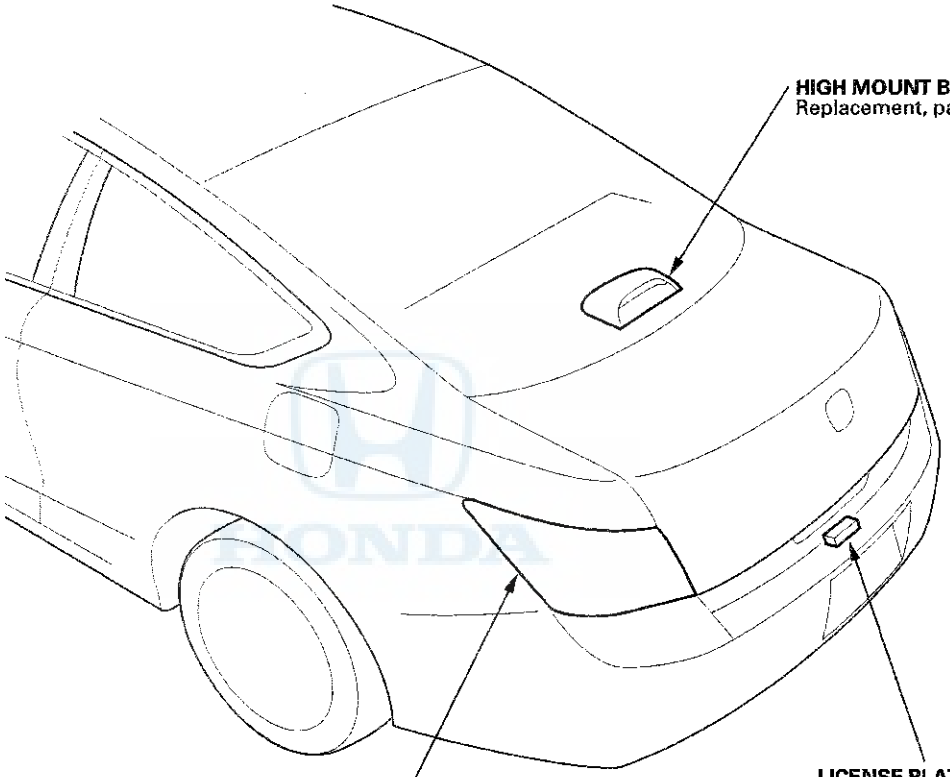

HIGH MOUNT BRAKE LIGHT
Replacement, page 22-216

LICENSE PLATE LIGHT
Replacement, page 22-215

TAILLIGHT and BRAKE LIGHT
Replacement, page 22-214
Bulb Replacement, page 22-211
REAR TURN SIGNAL LIGHT
Replacement, page 22-214
Bulb Replacement, page 22-211
BACK-UP LIGHT
Replacement, page 22-214
Bulb Replacement, page 22-211

(cont'd)

Component Location Index (cont'd)

2-door

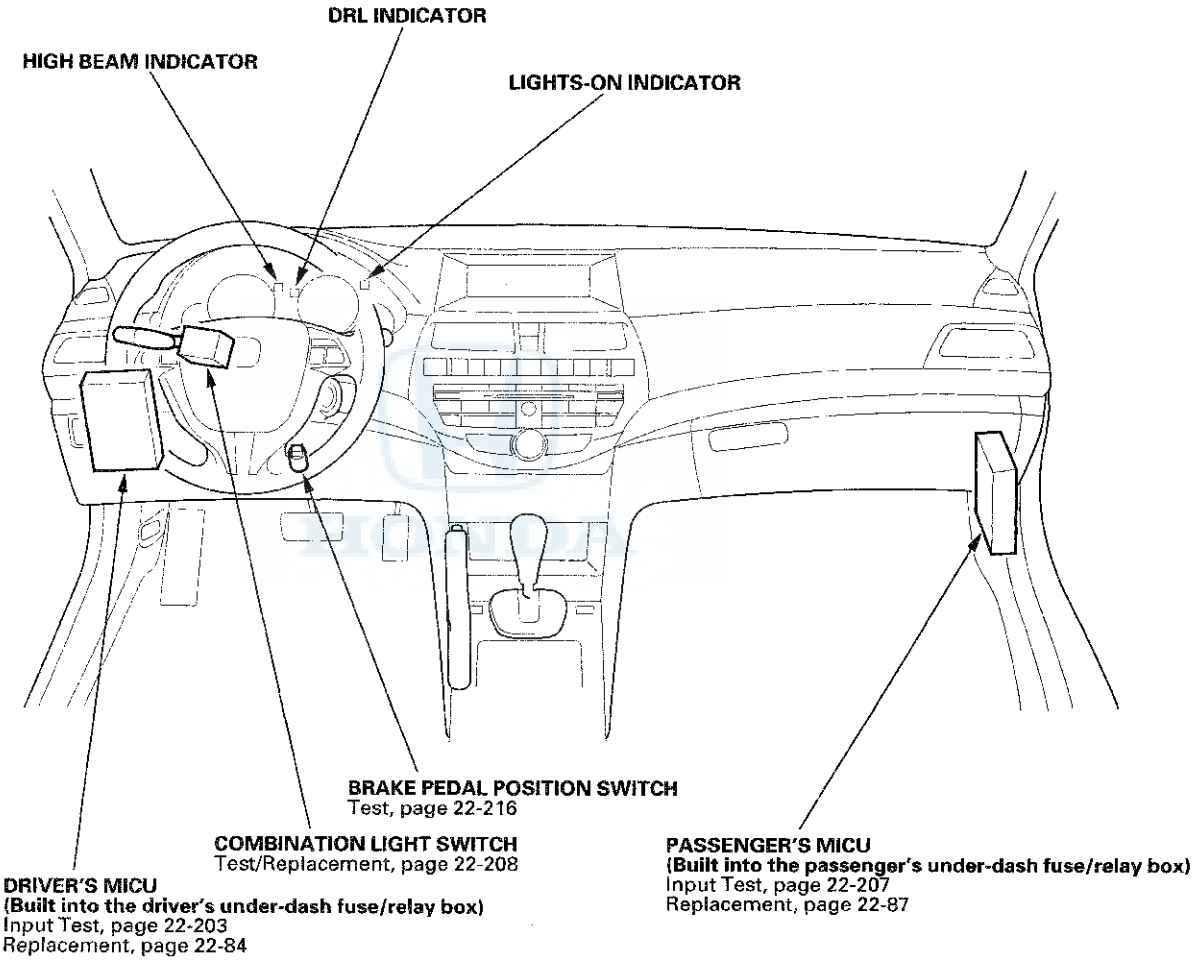

System Description

Headlights System Description

The headlight system is composed of the driver's MICU, the passenger's MICU, the headlight and dimmer/flash-to-pass switches (inside the combination light switch), the left and right headlights, and the high beam indicator.
Each MICU controls each side of the headlights with a built-in low beam control circuit and a built-in high beam control circuit based upon the position of the headlight and dimmer/flash-to-pass combination light switches. The taillights and license plate lights are controlled by the driver's MICU only.

Low Beams
When you move the headlight switch to the ON position and the dimmer/flash-to-pass switch to the low position, a ground signal is supplied to the terminal No. 8 of the driver's under-dash fuse/relay box connector R (24P). The driver's MICU then energizes the low beam control circuit, supplying battery voltage to the low beam of the left headlight, turning it on. Also the driver's MICU sends the message to the passenger's MICU by B-CAN communication lines. The passenger's MICU then energizes the low beam control circuit, supplying battery voltage to the low beam of the right headlight, turning it on.

High Beams
When you move the headlight switch to the ON position and the dimmer/flash-to-pass switch to the high position, ground signals are supplied to the terminals No. 8 and No. 22 of the driver's under-dash fuse/relay box (driver's MICU) connector R (24P). The driver's and passenger's MICUs then energize the each side of the high beam headlight control circuits, supplying battery voltage to the high beam headlights, turning them on.

Flash-to-Pass
When you pull the dimmer/flash-to-pass switch to the passing position, a ground signal is supplied to terminal No. 21 of the driver's under-dash fuse/relay box (MICU) connector R (24P). The driver's and passenger's MICUs then energize the high beam control circuits for as long as the switch is held, supplying battery voltage to the high beam headlights, turning them on.

Daytime Running Lights System Description

The daytime running lights system includes the driver and passenger's MICUs, the left and right high beam headlights, the parking brake switch, and the DRL indicator. The daytime running lights operate with the ignition switch ON (II), the headlights off (headlight switch OFF or in the parking position), and the parking brake released.
When the daytime running lights are on, the MICU turns the high beam headlight control circuit on and off (duty cycle), which provides a reduced voltage (approximately 6—8 volts) to the high beam headlights (via the No. 1 and No. 28 fuses in the driver's under-dash fuse/relay box and No. 1 fuse in the passenger's under-dash fuse/relay box); the high beam headlights come on with reduced brightness. The gauge control module controls the DRL indicator to turn it on.

NOTE:
- The daytime running lights are disabled when the ignition switch is turned to LOCK (0). To keep the daytime running lights from coming on, apply the parking brake switch while the ignition switch is in LOCK (0) position. When you then turn the ignition switch back to ON (II), the daytime running lights will not come on until the parking brake is released.
- The headlights revert to normal operation when you turn them on with the headlight switch.

Circuit Diagram

With automatic lighting

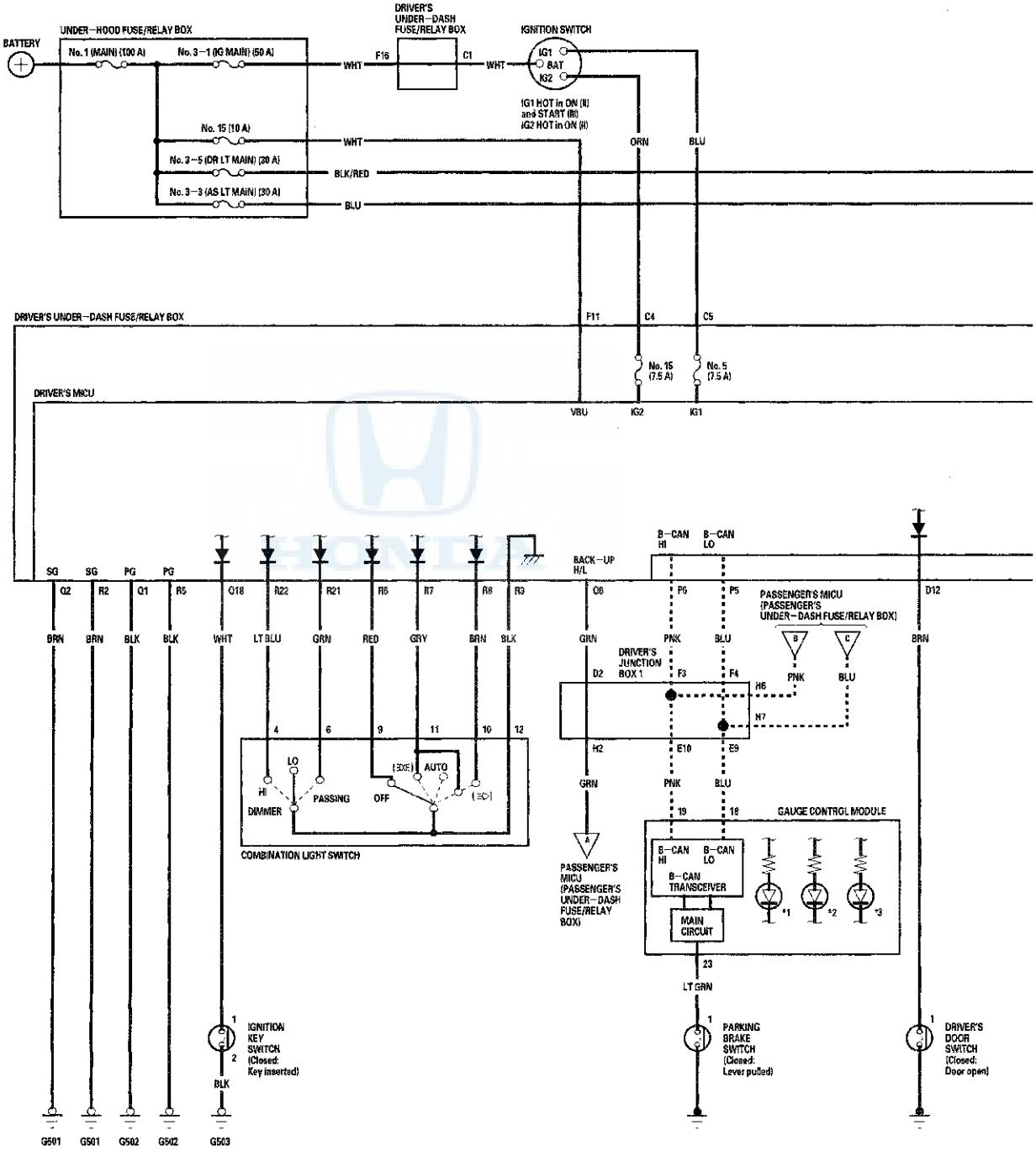

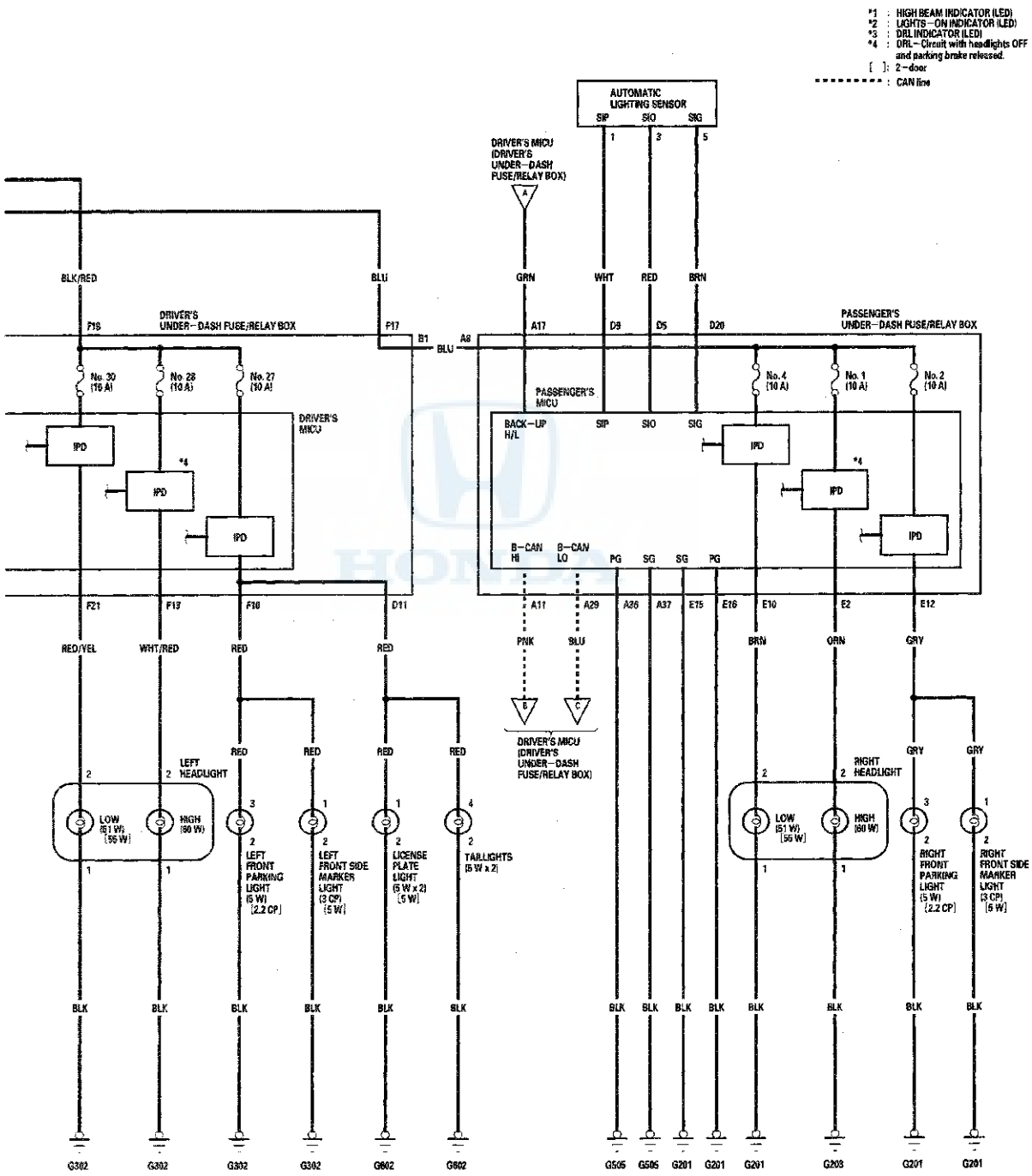
*1 : HIGH BEAM INDICATOR (LED)
*2 : LIGHTS—ON INDICATOR (LED)
*3 : DRL INDICATOR (LED)
*4 : DRL—Circuit with headlights OFF and parking brake released.
[ ]: 2—door
: CAN line
AUTOMATIC LIGHTING SENSOR
SIP SIO SIG
DRIVER'S MICU (DRIVER'S UNDER—DASH FUSE/RELAY BOX)
DRIVER'S UNDER—DASH FUSE/RELAY BOX
PASSENGER'S UNDER—DASH FUSE/RELAY BOX
No. 30 (10 A)
No. 28 (10 A)
No. 27 (10 A)
No. 4 (10 A)
No. 1 (10 A)
No. 2 (10 A)
DRIVER'S MICU
PASSENGER'S MICU
BACK—UP H/L
IPD
B—CAN HI
B—CAN LO
LEFT HEADLIGHT
RIGHT HEADLIGHT
LOW (51 W) [55 W]
HIGH (60 W)
LEFT FRONT PARKING LIGHT (5 W) [2.2 CP]
LEFT FRONT SIDE MARKER LIGHT (3 CP) [5 W]
LICENSE PLATE LIGHT (5 W x 2) [5 W]
TAILLIGHTS (5 W x 2)
RIGHT FRONT PARKING LIGHT (5 W) [2.2 CP]
RIGHT FRONT SIDE MARKER LIGHT (3 CP) [5 W]
BLK/RED
BLU
GRN
WHT
RED
BRN
RED/YEL
WHT/RED
PNK
ORN
GRY
BLK
G302
G602
G505
G506
G201
G203

Circuit Diagram (cont'd)

Without automatic lighting

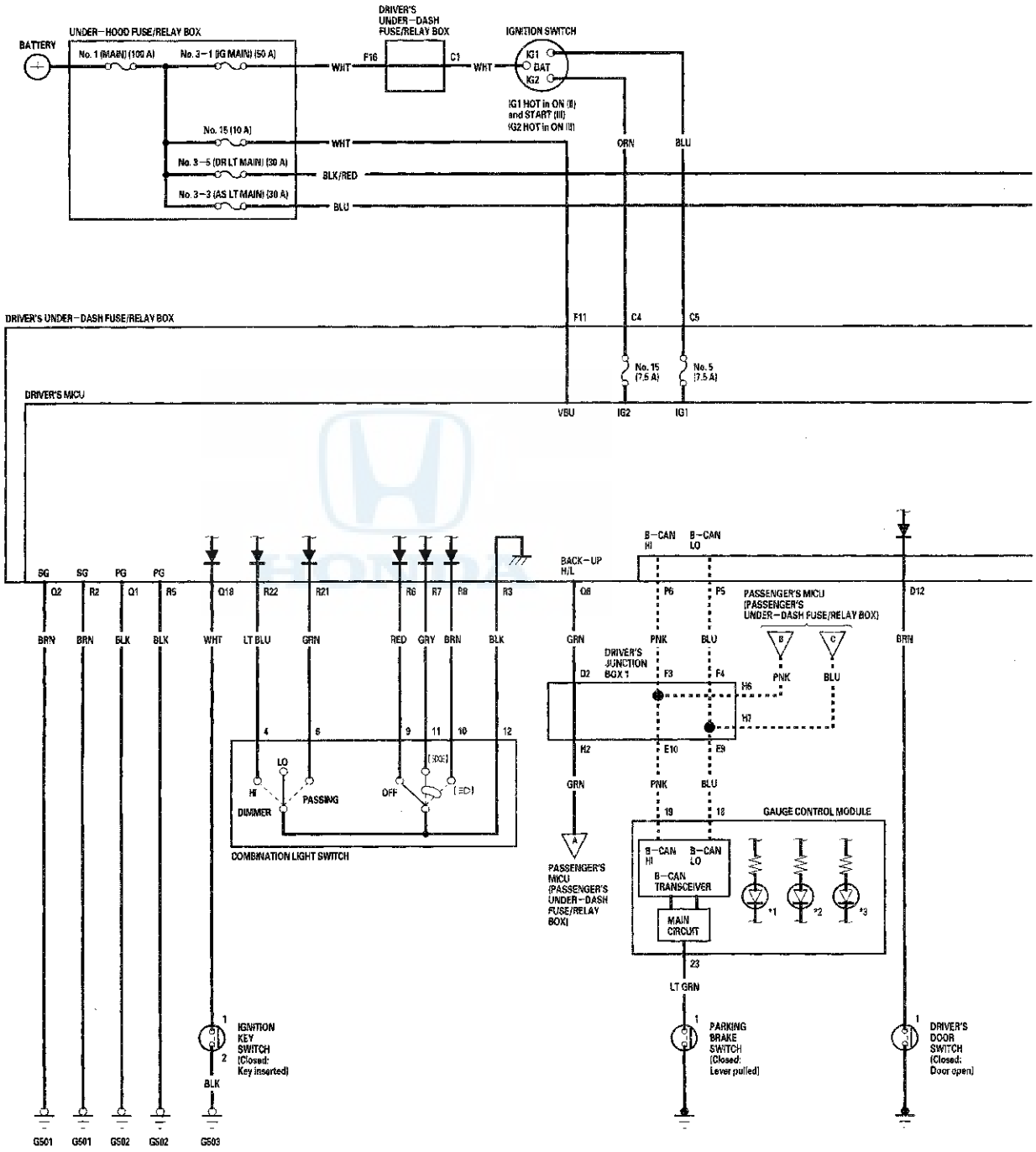

*1 : HIGH BEAM INDICATOR (LED)
*2 : LIGHTS—ON INDICATOR (LED)
*3 : DRL INDICATOR (LED)
*4 : DRL—Circuit with headlights OFF and parking brake released.
[ ] : 2—door
- - - - - - : CAN line

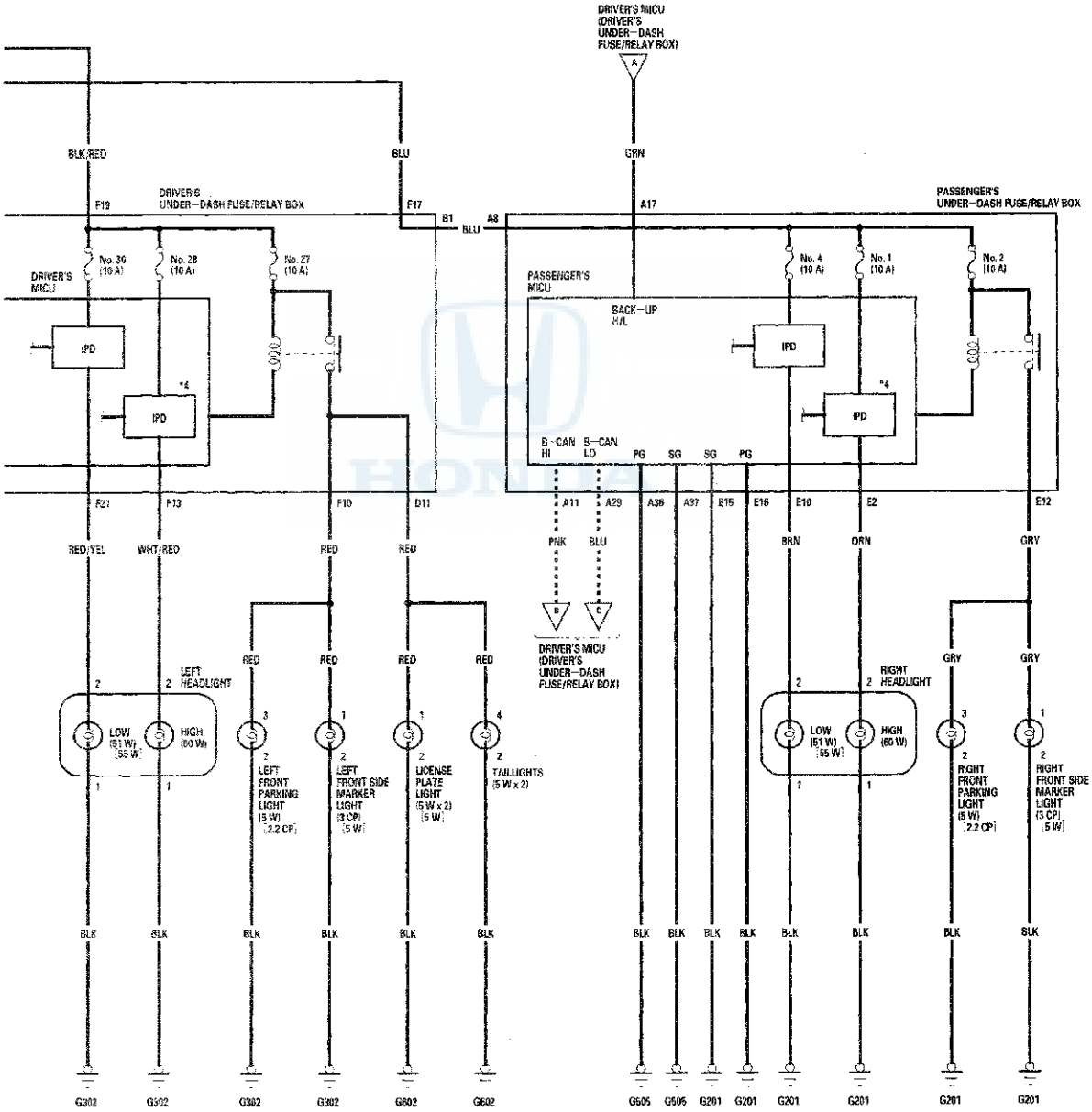

Circuit Diagram - Back-up Lights

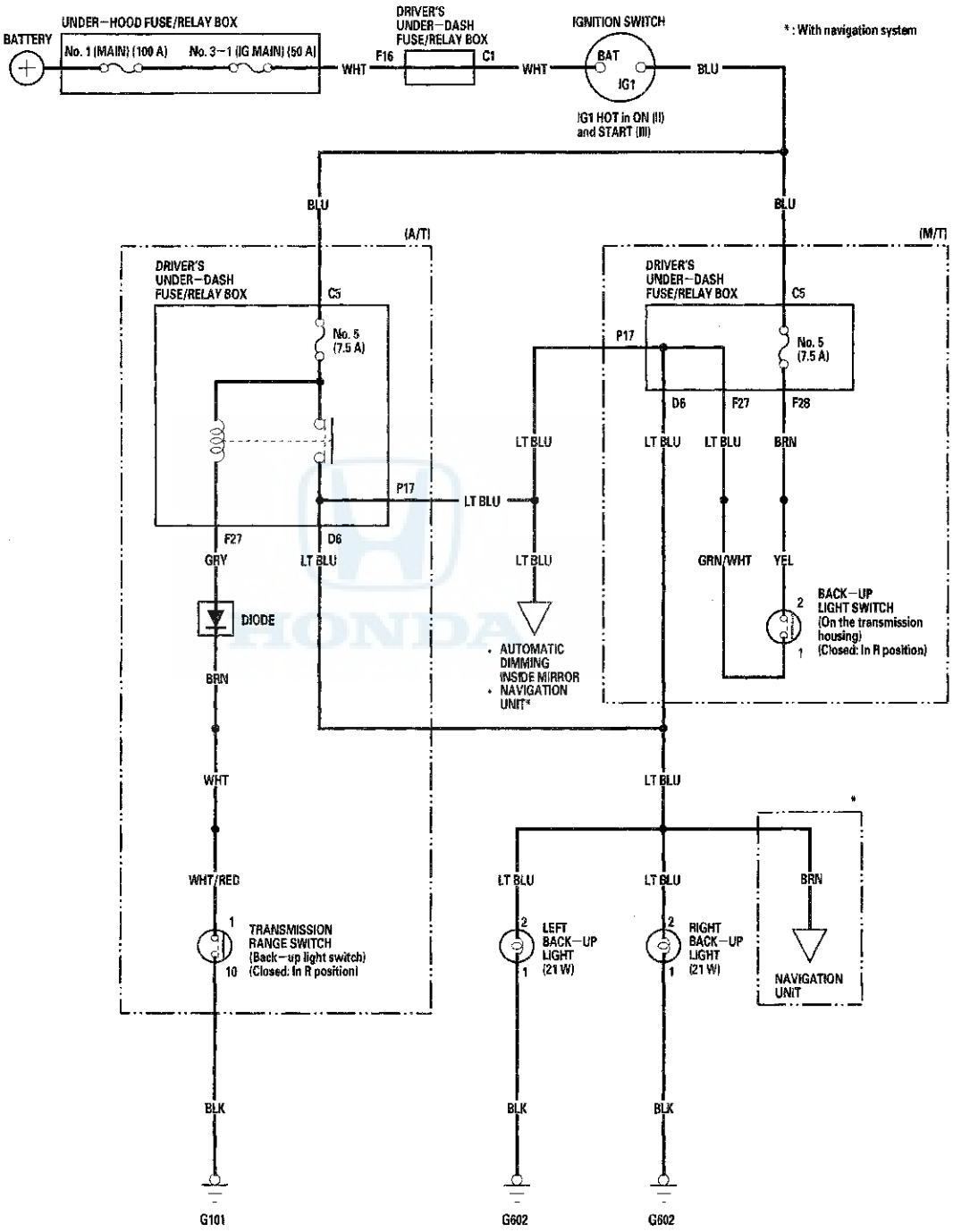

Circuit Diagram - Brake Lights

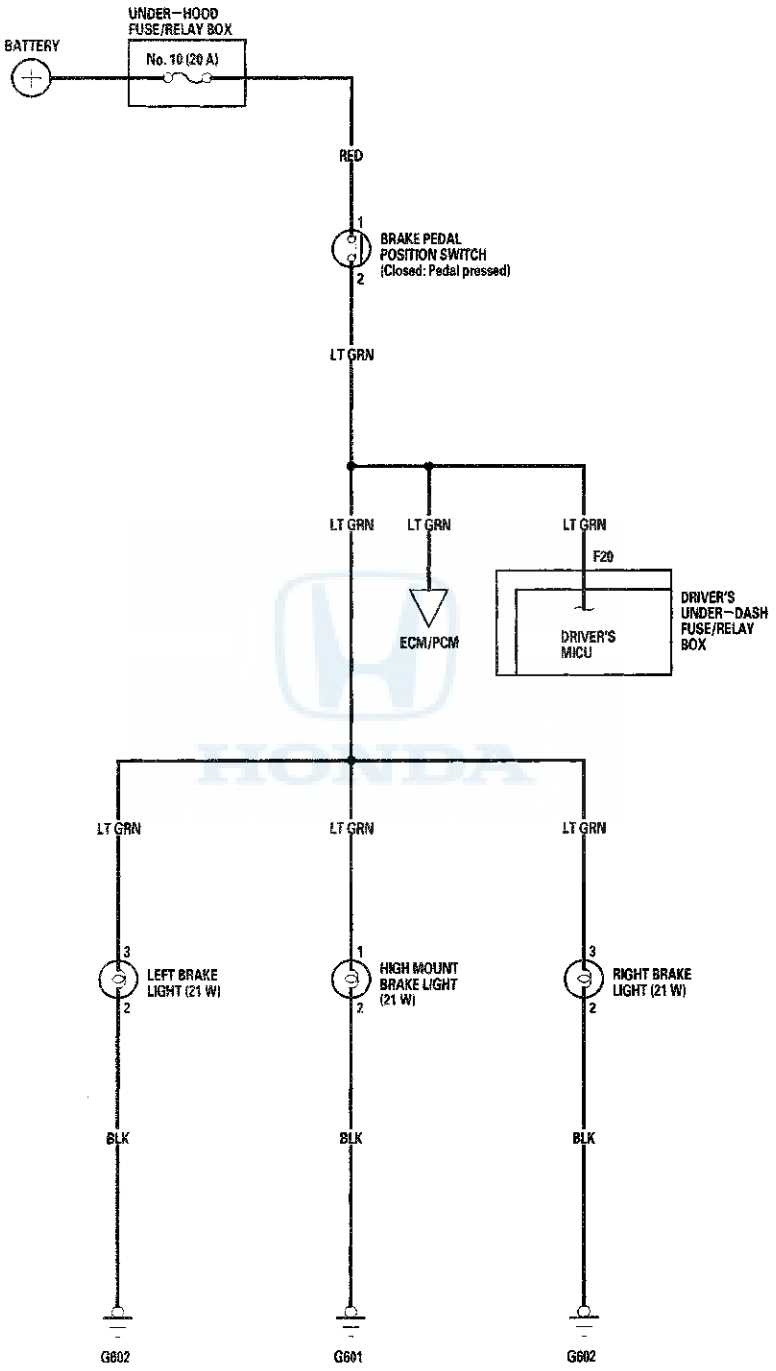

DTC Troubleshooting

DTC B10CF: Left Daytime Running Lights Circuit Malfunction

NOTE:
- If you are troubleshooting multiple DTCs, be sure to follow the instructions in B-CAN System Diagnosis Test Mode A (see page 22-120).
- Make sure the No. 15 (7.5 A) fuse in the driver's under-dash fuse/relay box is OK.

1. Clear the DTCs with the HDS.
2. Turn the ignition switch to LOCK (0).
3. Release the parking brake lever.
4. Turn the headlight switch OFF.
5. Turn the ignition switch to ON (II).

   Is DTC B10CF indicated?

   YES—Go to step 6.

   NO—Intermittent failure, the system is OK at this time. Check for loose or poor connections. ■

6. Turn the headlight high beam ON.

   Does the left headlight (high beam) come on?

   YES—Go to step 7.

   NO—Go to step 9.

7. Turn the ignition switch to LOCK (0).
8. Measure voltage between body ground and the driver's under-dash fuse/relay box connector Q (20P) terminals No.1 and No. 2, and between body ground and the connector R (24P) terminals No. 2 and No. 5 individually.

DRIVER'S UNDER-DASH FUSE/RELAY BOX CONNECTOR Q (20P)

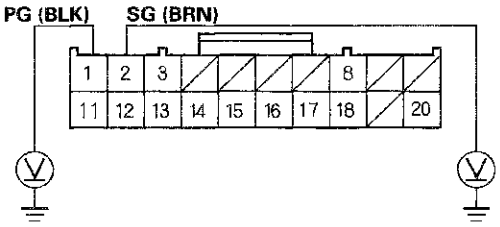

Wire side of female terminals

DRIVER'S UNDER-DASH FUSE/RELAY BOX CONNECTOR R (24P)

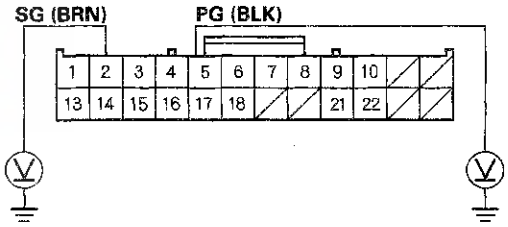

Wire side of female terminals

Is there 0.5 V or less?

YES—Faulty driver's MICU; replace the driver's under-dash fuse/relay box. ■

NO—An open in the wire or poor ground (G501, G502). ■

9. Turn the ignition switch to LOCK (0).

10. Turn the headlight switch OFF.

11. Check the No. 28 (10 A) fuse in the driver's under-dash fuse/relay box.

    Is the fuse OK?

    YES—Go to step 12.

    NO—Replace the fuse, and recheck. If the fuse is blown again, repair a short in the wire.■

12. Check the left headlight bulb.

    Is the bulb OK?

    YES—Go to step 13.

    NO—Replace the bulb and recheck.■

13. Disconnect driver's under-dash fuse/relay box connector F (33P).

14. Disconnect the left headlight (high beam) 2P connector.

15. Check for continuity between the driver's under-dash fuse/relay box connector F (33P) terminal No. 13 and the left headlight (high beam) 2P connector terminal No. 2.

LEFT HEADLIGHT (HIGH BEAM) 2P CONNECTOR
Wire side of female terminals

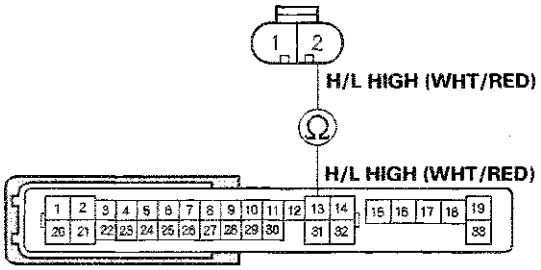

DRIVER'S UNDER-DASH FUSE/RELAY BOX CONNECTOR F (33P)
Wire side of female terminals

Is there continuity?

YES—Go to step 16.

NO—Repair an open in the wire.■

16. Check for continuity between the left headlight (high beam) 2P connector terminal No. 1 and body ground.

LEFT HEADLIGHT (HIGH BEAM) 2P CONNECTOR

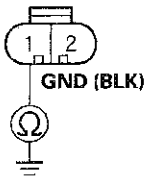

Wire side of female terminals

Is there continuity?

YES—Faulty driver's MICU; replace the driver's under-dash fuse/relay box.■

NO—Repair an open in the wire or poor ground (G302).■

DTC Troubleshooting (cont'd)

DTC B11CF: Right Daytime Running Lights Circuit Malfunction

NOTE: If you are troubleshooting multiple DTCs, be sure to follow the instructions in B-CAN System Diagnosis Test Mode A (see page 22-120).

1. Clear the DTCs with the HDS.
2. Turn the ignition switch to LOCK (0).
3. Release the parking brake lever.
4. Turn the headlight switch OFF.
5. Turn the ignition switch to ON (II).

   Is DTC B11CF indicated?

   YES—Go to step 6.

   NO—Intermittent failure, the system is OK at this time. Check for loose or poor connections.■

6. Turn the headlight high beam ON.

   Does the right headlight come on?

   YES—Go to step 7.

   NO—Go to step 9.

7. Turn the ignition switch to LOCK (0).
8. Measure voltage between body ground and the passenger's under-dash fuse/relay box connector A (38P) terminals No. 36 and No. 37, and between body ground and the connector E (18P) terminals No. 15 and No. 16 individually.

PASSENGER'S UNDER-DASH FUSE/RELAY BOX CONNECTOR A (38P)

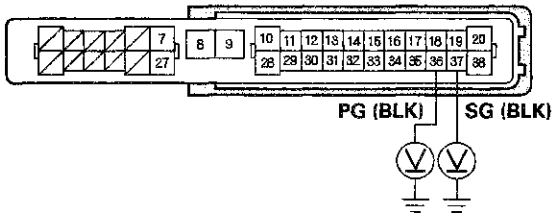

Wire side of female terminals

PASSENGER'S UNDER-DASH FUSE/RELAY BOX CONNECTOR E (18P)

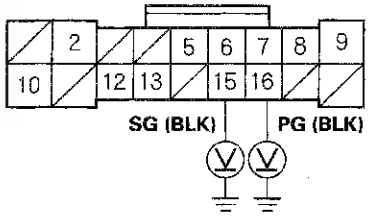

Wire side of female terminals

Is there 0.5 V or less?

YES—Faulty passenger's MICU; replace the passenger's under-dash fuse/relay box.■

NO—Repair an open in the wire or poor ground (G201, G505).■

9. Turn the ignition switch to LOCK (0).

10. Turn the headlight switch OFF.

11. Check the No. 1 (10 A) fuse in the passenger's under-dash fuse/relay box.

    Is the fuse OK?

    YES—Go to step 12.

    NO—Replace the fuse, and recheck. If the fuse is blown again, repair a short in the wire.■

12. Check the right headlight bulb.

    Is the bulb OK?

    YES—Go to step 13.

    NO—Replace the bulb and recheck.■

13. Disconnect passenger's under-dash fuse/relay box connector E (18P).

14. Disconnect the right headlight (high beam) 2P connector.

15. Check for continuity between the passenger's under-dash fuse/relay box connector E (18P) terminal No. 2 and the right headlight (high beam) 2P connector terminal No. 2.

RIGHT HEADLIGHT (HIGH BEAM) 2P CONNECTOR
Wire side of female terminals

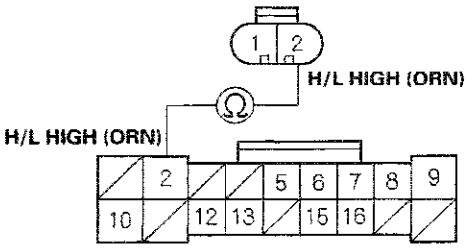

PASSENGER'S UNDER-DASH FUSE/RELAY BOX CONNECTOR E (18P)
Wire side of female terminals

Is there continuity?

YES—Go to step 16.

NO—Repair an open in the wire.■

16. Check for continuity between the right headlight (high beam) 2P connector terminal No. 1 and body ground.

RIGHT HEADLIGHT (HIGH BEAM) 2P CONNECTOR

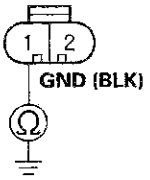

Wire side of female terminals

Is there continuity?

YES—Faulty passenger's MICU; replace the passenger's under-dash fuse/relay box.■

NO—Repair an open in the wire or poor ground (G203).■

DTC Troubleshooting (cont'd)

DTC B1275: Combination Light Switch OFF Position Circuit Malfunction

DTC B1276: Combination Light Switch Parking (SMALL) Position Circuit Malfunction

DTC B1277: Combination Light Switch AUTO Position Circuit Malfunction

DTC B1278: Combination Light Switch ON Position Circuit Malfunction

NOTE: If you are troubleshooting multiple DTCs, be sure to follow the instructions in B-CAN System Diagnosis Test Mode A (see page 22-120).

1. Clear the DTCs with the HDS.

2. Turn the ignition switch to LOCK (0) and then back to ON (II).

3. Turn the combination light switch to the PARKING (SMALL), AUTO, and ON (low beam) positions, and then to the OFF position.

4. Wait for 6 seconds or more.

5. Check for DTCs with the HDS.

   Is DTC B1275, B1276, B1277, or B1278 indicated?
   YES—Go to step 6.
   NO—Intermittent failure, the system is OK at this time. Check for loose or poor connections. ■

6. Select LIGHTING from the BODY ELECTRICAL system select menu, and enter the DATA LIST.

7. Check each combination light switch position value with the DATA LIST menu.

When the combination light switch is turned OFF

Data List	Value
Headlight Switch (OFF)	ON
Headlight Switch (PARKING)	OFF
Headlight Switch (AUTO)	OFF
Headlight Switch (HEADLIGHT)	OFF

When the combination light switch is turned to PARKING (SMALL)

Data List	Value
Headlight Switch (OFF)	OFF
Headlight Switch (PARKING)	ON
Headlight Switch (AUTO)	OFF
Headlight Switch (HEADLIGHT)	OFF

When the combination light switch is turned to AUTO

Data List	Value
Headlight Switch (OFF)	OFF
Headlight Switch (PARKING)	OFF
Headlight Switch (AUTO)	ON
Headlight Switch (HEADLIGHT)	OFF

When the combination light switch is turned ON (HEADLIGHT)

Data List	Value
Headlight Switch (OFF)	OFF
Headlight Switch (PARKING)	ON
Headlight Switch (AUTO)	OFF
Headlight Switch (HEADLIGHT)	ON

Are all data list values correct?

YES—Faulty driver's MICU; replace the driver's under-dash fuse/relay box (see page 22-84). ■

NO—Go to step 8.

8. Turn the ignition switch to LOCK (0).

9. Disconnect the combination light switch 12P connector.

10. Turn the ignition switch to ON (II).

11. Select LIGHTING from the BODY ELECTRICAL system select menu, and enter the DATA LIST.

12. Check each combination light switch position value with the DATA LIST menu.

When the combination light switch is turned OFF

Data List	Value
Headlight Switch (OFF)	OFF
Headlight Switch (PARKING)	OFF
Headlight Switch (AUTO)	OFF
Headlight Switch (HEADLIGHT)	OFF

Are all data list values indicated OFF?

YES—Go to step 16.

NO—Go to step 13.

13. Turn the ignition switch to LOCK (0).

14. Disconnect driver's under-dash fuse/relay box connector R (24P).

15. Check for continuity between body ground and the driver's under-dash fuse/relay box connector R (24P) terminals No. 6, No. 7, and No. 8 individually.

DRIVER'S UNDER-DASH FUSE/RELAY BOX CONNECTOR R (24P)

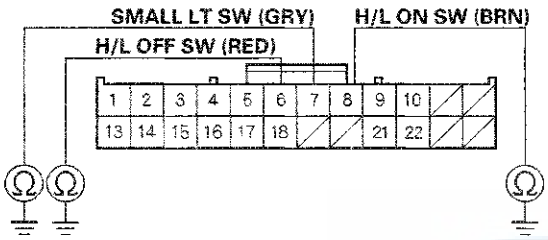

Wire side of female terminals

Is there continuity?

YES—Repair a short to ground in the wire. ■

NO—Faulty driver's MICU; replace the driver's under-dash fuse/relay box (see page 22-84). ■

16. Turn the ignition switch to LOCK (0).

17. Do the combination light switch test (see page 22-208).

Is the combination light switch OK?

YES—Go to step 18.

NO—Replace the combination light switch. ■

18. Disconnect driver's under-dash fuse/relay box connector R (24P).

19. Check for continuity between the driver's under-dash fuse/relay box connector R (24P) terminals and the combination light switch 12P connector terminals as shown:

Driver's under-dash fuse/relay box connector R (24P)	Combination light switch 12P connector
6	9
8	10
7	11
3	12

COMBINATION LIGHT SWITCH 12P CONNECTOR
Wire side of female terminals

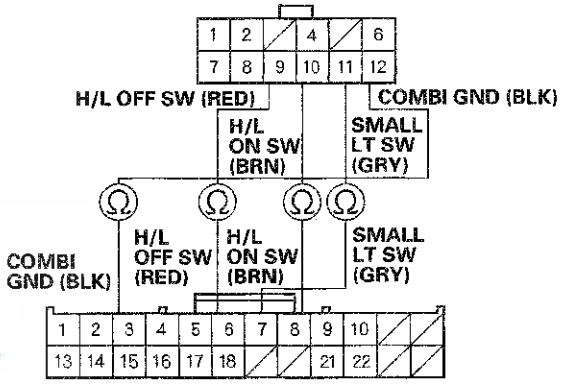

DRIVER'S UNDER-DASH FUSE/RELAY BOX CONNECTOR R (24P)
Wire side of female terminals

Is there continuity?

YES—Go to step 20.

NO—Repair an open in the wire. ■

20. Check for continuity between the driver's under-dash fuse/relay box connector R (24P) terminals as shown:

From terminal	To terminal
6	7, 8, 21, 22
7	8, 21, 22

Is there continuity?

YES—Repair a short between the wires. ■

NO—Faulty driver's MICU; replace the driver's under-dash fuse/relay box (see page 22-84). ■

DTC Troubleshooting (cont'd)

DTC B1279: Headlight Switch DIMMER Position Circuit Malfunction

NOTE: If you are troubleshooting multiple DTCs, be sure to follow the instructions in B-CAN System Diagnosis Test Mode A (see page 22-120).

1. Clear the DTCs with the HDS.
2. Turn the ignition switch to LOCK (0) and then back to ON (II).
3. Turn the combination light (headlight) switch ON.
4. Change the dimmer switch from low beam to high beam.
5. Turn the combination light switch OFF, and then to the passing position, and wait for at least 6 seconds.
6. Check for DTCs with the HDS.

   Is DTC B1279 indicated?

   YES—Go to step 7.

   NO—Intermittent failure, the system is OK at this time. Check for loose or poor connections. ■

7. Select LIGHTING from the BODY ELECTRICAL system select menu, then enter the DATA LIST.
8. Check each combination light switch position value with the DATA LIST menu.

   When the passing switch is operated

Data List	Value
Headlight Switch (PASSING)	ON
Headlight Switch (High beam)	OFF

   When the headlight switch is turned ON, and the dimmer switch changed from low beam to high beam

Data List	Value
Headlight Switch (PASSING)	OFF
Headlight Switch (High beam)	ON
Headlight Switch (HEADLIGHT)	ON

   Are all data list values correct?

   YES—Faulty driver's MICU; replace the driver's under-dash fuse/relay box (see page 22-84). ■

   NO—Go to step 9.

9. Turn the ignition switch to LOCK (0).
10. Disconnect the combination light switch 12P connector.
11. Turn the ignition switch to ON (II).
12. Select LIGHTING from the BODY ELECTRICAL system select menu, then enter the DATA LIST.
13. Check each combination light switch position value with the DATA LIST menu.

   When the combination light switch is turned OFF

Data List	Value
Headlight Switch (PASSING)	OFF
Headlight Switch (High beam)	OFF
Headlight Switch (HEADLIGHT)	OFF

   Are all data list values indicated OFF?

   YES—Go to step 17.

   NO—Go to step 14.

14. Turn the ignition switch to LOCK (0).
15. Disconnect under-dash fuse/relay box connector R (24P).
16. Check for continuity between body ground and the driver's under-dash fuse/relay box connector R (24P) terminals No. 8, No. 21, and No. 22.

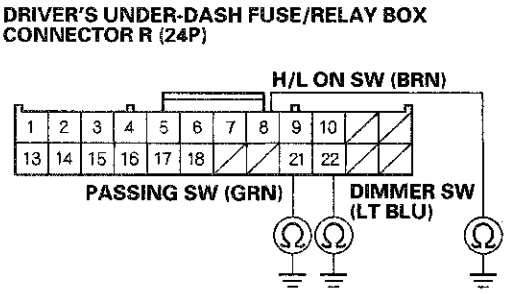

Wire side of female terminals

   Is there continuity?

   YES—Repair a short to ground in the wire. ■

   NO—Faulty driver's MICU; replace the driver's under-dash fuse/relay box (see page 22-84). ■

17. Turn the ignition switch to LOCK (0).

18. Do the combination light switch test (see page 22-208).

    Is the combination light switch OK?

    YES—Go to step 19.

    NO—Replace the combination light switch. ■

19. Disconnect driver's under-dash fuse/relay box connector R (24P).

20. Check for continuity between the driver's under-dash fuse/relay box connector R (24P) terminals and the combination light switch 12P connector terminals as shown:

Driver's under-dash fuse/relay box connector R (24P)	Combination light switch 12P connector
3	12
8	10
21	6
22	4

DRIVER'S UNDER-DASH FUSE/RELAY BOX CONNECTOR R (24P)
Wire side of female terminals

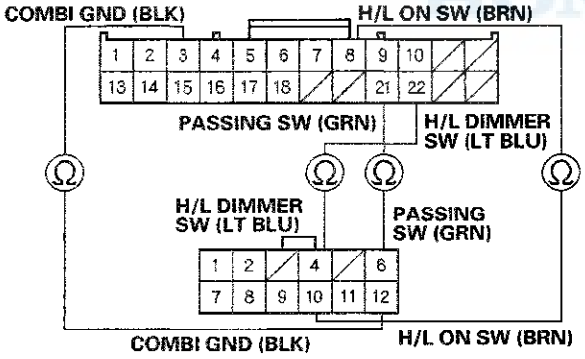

COMBINATION LIGHT SWITCH 12P CONNECTOR
Wire side of female terminals

Is there continuity?

YES—Go to step 21.

NO—Repair an open in the wire. ■

21. Check for continuity between the driver's under-dash fuse/relay box connector R (24P) terminals as shown:

From terminal	To terminal
21	6, 7, 8, 22
22	6, 7, 8

Is there continuity?

YES—Repair a short between the wires. ■

NO—Faulty driver's MICU; replace the driver's under-dash fuse/relay box (see page 22-84). ■

DTC Troubleshooting (cont'd)

DTC B1575: Automatic Lighting Sensor Circuit Malfunction

1. Clear the DTCs with the HDS.
2. Turn the ignition switch to LOCK (0) and then back to ON (II).
3. Wait for one second.
4. Check for DTCs with the HDS.

   Is DTC B1575 indicated?

   YES—Go to step 5.

   NO—Intermittent failure, the system is OK at this time. Check for loose or poor connections. ■

5. Turn the ignition switch to LOCK (0).
6. Disconnect the automatic lighting/sunlight sensor 5P connector.
7. Turn the ignition switch to ON (II).
8. Measure the voltage between body ground and the automatic lighting/sunlight sensor 5P connector terminal No. 1.

AUTOMATIC LIGHTING/SUNLIGHT SENSOR 5P CONNECTOR

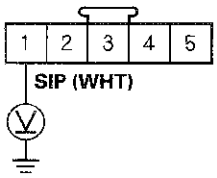

Wire side of female terminals

Is there about 5V?

YES—Replace the automatic lighting/sunlight sensor. ■

NO—Go to step 9.

9. Turn the ignition switch to LOCK (0).
10. Disconnect passenger's under-dash fuse/relay box connector D (28P).
11. Check for continuity between the passenger's under-dash fuse/relay box connector D (28P) No. 9 terminal and the automatic lighting/sunlight sensor 5P connector terminal No. 1.

AUTOMATIC LIGHTING/SUNLIGHT SENSOR 5P CONNECTOR
Wire side of female terminals

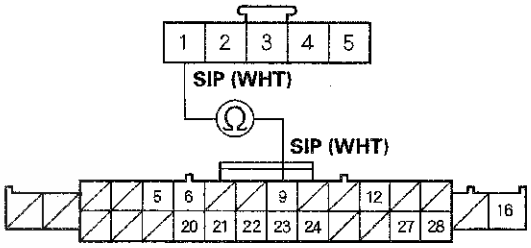

PASSENGER'S UNDER-DASH FUSE/RELAY BOX CONNECTOR D (28P)
Wire side of female terminals

Is there continuity?

YES—Faulty passenger's MICU. Substitute a known-good passenger's under-dash fuse/relay box and recheck. ■

NO—Repair an open in the wire. ■

MICU Input Test

NOTE:
- Before testing, troubleshoot the multiplex integrated control unit first, using B-CAN System Diagnosis Test Mode A (see page 22-120).
- Before testing, make sure the No. 15 (7.5 A) fuse in the driver's under-dash fuse/relay box is OK.

Driver's MICU

1. Turn the ignition switch to LOCK (0), and remove the driver's dashboard lower cover.

2. Disconnect driver's under-dash fuse/relay box connectors B, D, F, Q, and R.

   NOTE: All connector views are wire side of female terminals.

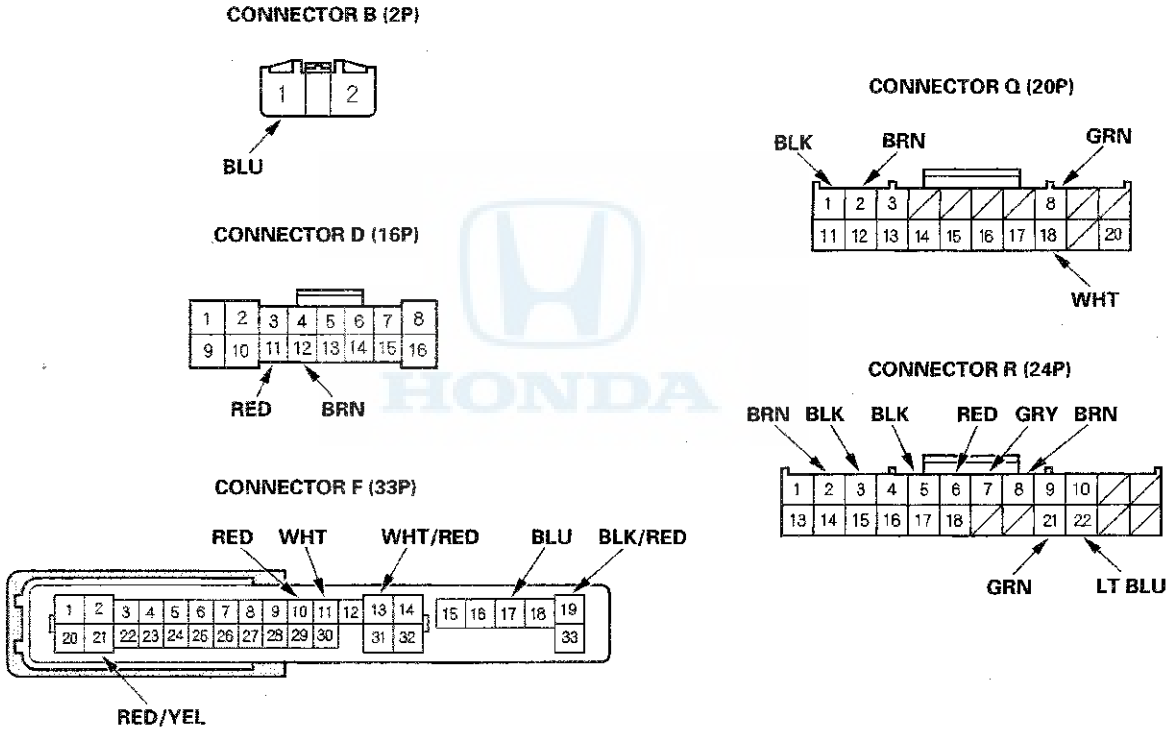

3. Inspect the connector and socket terminals to be sure they are all making good contact.

   - If the terminals are bent, loose or corroded, repair them as necessary and recheck the system.
   - If the terminals look OK, go to step 4.

(cont'd)

MICU Input Test (cont'd)

4. With the connectors still disconnected, make these input tests at the connectors.

   - If any test indicates a problem, find and correct the cause, then recheck the system.
   - If all the input tests prove OK, go to step 5.

Cavity	Wire	Test condition	Test: Desired result	Possible cause if result is not obtained
D11	RED	Under all conditions	Connect the terminal F19 and terminal D11 with a jumper wire: The taillights and the license plate lights should come on.	• Blown bulb • Poor ground (G602) • An open in the wire
F10	RED	Under all conditions	Connect the terminal F19 and terminal F10 with a jumper wire: The left front parking light and the left front side marker light should come on.	• Blown bulb • Poor ground (G302) • An open in the wire
F13	WHT/ RED	Under all conditions	Connect the terminal F19 and terminal F13 with a jumper wire: The left headlight (high beam) should come on.	• Blown bulb • Poor ground (G302) • An open in the wire
F21	RED/ YEL	Under all conditions	Connect the terminal F19 and terminal F21 with a jumper wire: The left headlight (low beam) should come on.	• Blown bulb • Poor ground (G302) • An open in the wire
Q8	GRN	Passenger's under-dash fuse/relay box connector A (38P) disconnected	Check for continuity between the terminal Q8 and the passenger's under-dash fuse/relay box connector A (38P) terminal No. 17: There should be continuity.	An open in the wire
			Check for continuity to ground: There should be no continuity.	A short in the wire

5. Reconnect the connectors to the driver's under-dash fuse/relay box, and make these input tests at the connector.

- If any test indicates a problem, find and correct the cause, then recheck the system.
- If all the input tests prove OK, go to step 6.

Cavity	Wire	Test condition	Test: Desired result	Possible cause if result is not obtained
Q1	BLK	Under all conditions	Measure the voltage to ground: There should be less than 0.5 V.	• Poor ground (G502) • An open in the wire
Q2	BRN	Under all conditions	Measure the voltage to ground: There should be less than 0.5 V.	• Poor ground (G501) • An open in the wire
R2	BRN	Under all conditions	Measure the voltage to ground: There should be less than 0.5 V.	• Poor ground (G501) • An open in the wire
R5	BLK	Under all conditions	Measure the voltage to ground: There should be less than 0.5 V.	• Poor ground (G502) • An open in the wire
B1	BLU	Under all conditions	Measure the voltage to ground: There should be battery voltage.	• Blown No. 3 (AS LT MAIN) (30 A) fuse in the under-hood fuse/relay box • Faulty driver's under-dash fuse/relay box • An open in the wire
D12	BRN	Driver's door open	Measure the voltage to ground: There should be less than 1 V.	• Faulty driver's door switch • An open in the wire
		Driver's door closed	Measure the voltage to ground: There should be more than 5 V.	• Faulty driver's door switch • A short to ground in the wire

HONDA

(cont'd)

MICU Input Test (cont'd)

Cavity	Wire	Test condition	Test: Desired result	Possible cause if result is not obtained
F11	WHT	Under all conditions	Measure the voltage to ground: There should be battery voltage.	• Blown No. 15 (10 A) fuse in the under-hood fuse/relay box • An open in the wire
F17	BLU	Under all conditions	Measure the voltage to ground: There should be battery voltage.	• Blown No. 3 (AS LT MAIN) (30 A) fuse in the under-hood fuse/relay box • An open in the wire
F19	BLK/ RED	Under all conditions	Measure the voltage to ground: There should be battery voltage.	• Blown No. 3 (DR LT MAIN) (30 A) fuse in the under-hood fuse/relay box • An open in the wire
Q18	WHT	Ignition key inserted into the ignition switch	Measure the voltage to ground: There should be less than 1 V.	• Faulty ignition key switch • An open in the wire • Poor ground (G503)
		Ignition switch LOCK (0), and the ignition key removed from the ignition switch	Measure the voltage to ground: There should be more than 5 V.	• Faulty ignition key switch • A short to ground in the wire
R6 · R3	RED · BLK	Combination light switch OFF	Measure the voltage between terminals R6 and R3: There should be less than 1 V.	• Faulty combination light switch • An open in the wire
		Combination light switch in any other position than OFF	Measure the voltage between terminals R6 and R3: There should be 5 V or more.	• Faulty combination light switch • A short to ground in the wire
R7 · R3	GRY · BLK	Combination light switch (SMALL position) ON	Measure the voltage between terminals R7 and R3: There should be less than 1 V.	• Faulty combination light switch • An open in the wire
		Combination light switch OFF	Measure the voltage between terminals R7 and R3: There should be 5 V or more.	• Faulty combination light switch • A short to ground in the wire
R8 · R3	BRN · BLK	Combination light switch (headlight) ON	Measure the voltage between terminals R8 and R3: There should be less than 1 V.	• Faulty combination light switch • An open in the wire
		Combination light switch OFF	Measure the voltage between terminals R8 and R3: There should be 5 V or more.	• Faulty combination light switch • A short to ground in the wire
R21 · R3	GRN · BLK	Combination light switch lever pulled (Passing)	Measure the voltage between terminals R21 and R3: There should be less than 1 V.	• Faulty combination light switch • An open in the wire
		Combination light switch lever released (OFF)	Measure the voltage between terminals R21 and R3: There should be 5 V or more.	• Faulty combination light switch • A short to ground in the wire
R22 · R3	LT BLU · BLK	Combination light switch (Dimmer) in high beam position	Measure the voltage between terminals R22 and R3: There should be less than 1 V.	• Faulty combination light switch • An open in the wire
		Combination light switch (Dimmer) in low beam position	Measure the voltage between terminals R22 and R3: There should be 5 V or more.	• Faulty combination light switch • A short to ground in the wire

Passenger's MICU

6. Turn the ignition switch to LOCK (0), and remove the right kick panel.
   - 2-door (see page 20-97)
   - 4-door (see page 20-99)

7. Disconnect passenger's under-dash fuse/relay box connectors A and E.
   NOTE: All connector views are wire side of female terminals.

CONNECTOR A (38P)

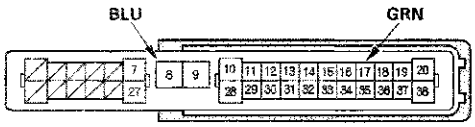

CONNECTOR E (18P)

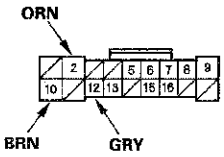

8. With the connectors still disconnected, make these input tests at the connectors.
   - If any test indicates a problem, find and correct the cause, then recheck the system.
   - If all the input tests prove OK, go to step 9.

Cavity	Wire	Test condition	Test: Desired result	Possible cause if result is not obtained
A8	BLU	Under all conditions	Measure the voltage to ground: There should be battery voltage.	• Blown No. 3 (AS LT MAIN) (30 A) fuse in the under-hood fuse/relay box • Faulty driver's under-dash fuse/relay box • An open in the wire
A17	GRN	Passenger's under-dash fuse/relay box connector A (38P) disconnected	Check for continuity between the A17 terminal and the driver's under-dash fuse/relay box connector Q (20P) terminal No. 8: There should be continuity.	An open in the wire
E2	ORN	Under all conditions	Connect the terminals A8 and E2 with a jumper wire: The right headlight (high beam) should come on.	• Blown bulb • Poor ground (G203)*1 or (G201)*2 • An open in the wire
E10	BRN	Under all conditions	Connect the terminals A8 and E10 with a jumper wire: The right headlight (low beam) should come on.	• Blown bulb • Poor ground (G201) • An open in the wire
E12	GRY	Under all conditions	Connect the terminals A8 and E12 with a jumper wire: The right front parking light and the right front side marker light should come on.	• Blown bulb • Poor ground (G201) • An open in the wire

* 1: EX-L, EX-L PZEV
* 2: Except EX-L, EX-L PZEV

9. If multiple failures are found on more than one control unit, replace the driver's under-dash fuse/relay box (includes the driver's MICU) (see page 22-84). If input failures are related to a particular control unit, replace the control unit.

Combination Light Switch Test/Replacement

1. Remove the dashboard lower cover (see page 20-153).
2. Remove the steering column covers (see page 17-28).
3. Disconnect the 12P connector (A) from the combination light switch (B).

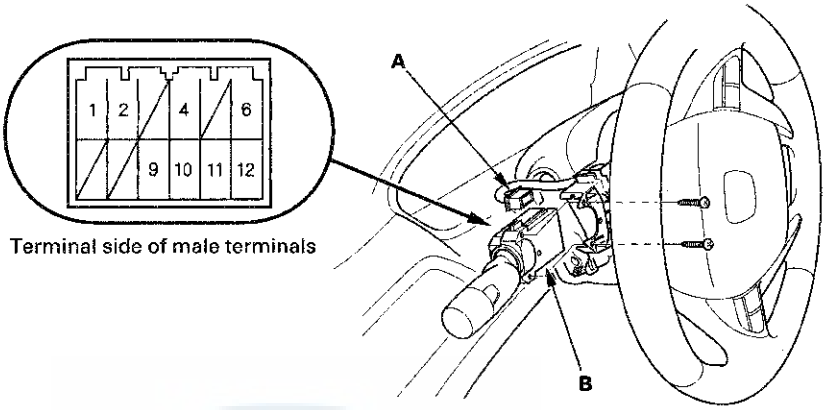

4. Remove the two screws, then slide out the combination light switch.
5. Inspect the connector terminals to be sure they are all making good contact.
   - If the terminals are bent, loose or corroded, repair them as necessary, and recheck the system.
   - If the terminals look OK, check for continuity between the terminals in each switch position according to the tables.

Light switch

Position \ Terminal			4	6	9	10	11	12
Headlight switch	OFF				○			○
							○	○
		LOW				○	○	○
		HIGH	○			○	○	○
Passing switch	OFF							
	ON			○				○

Turn signal switch

Position \ Terminal	1	2	12
LEFT		○	○
Neutral			
RIGHT	○		○

6. If the continuity is not as specified, replace the switch.

Headlight Adjustment

⚠CAUTION

Headlights become very hot during use; do not touch them or any attaching hardware immediately after they have been turned off.

Before adjusting the headlights:

- Park the vehicle on a level surface.
- Make sure the tire pressures are correct.
- The driver or someone who weighs the same should sit in the driver's seat.

1. Clean the outer lens so that you can see the center (A) of the headlights.

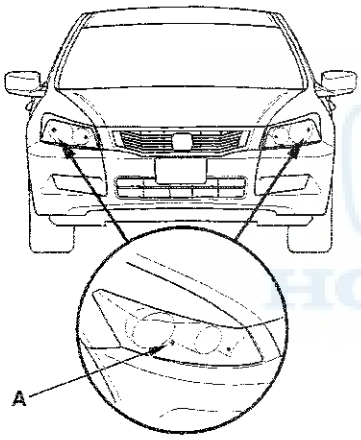

2. Park the vehicle in front of a wall or a screen (A).

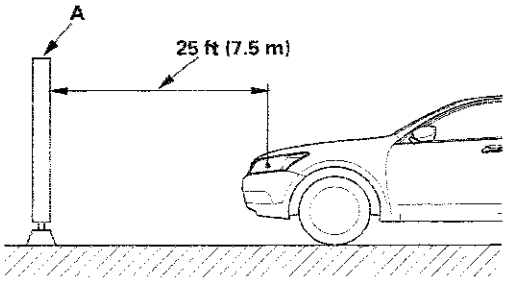

3. Turn the low beams on.

4. Determine if the headlights are aimed properly.

   Vertical adjustment:
   Measure the height of the headlights (A).
   Adjust the cut line (B) to the light's height.

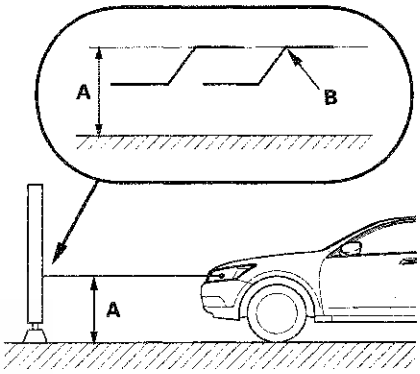

5. If necessary, open the hood and adjust the headlights by turning the vertical adjuster.

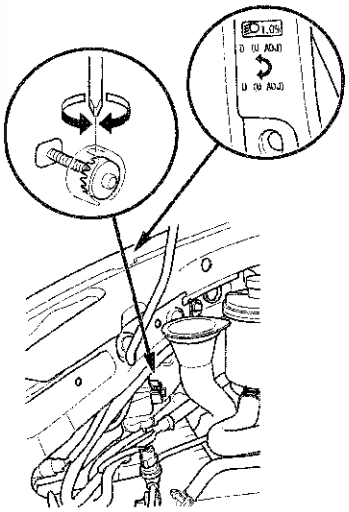

Headlight Replacement

4-door

1. Remove the parts shown.

   - Upper fender trim (see page 20-260)
   - Front bumper (see page 20-239)
   - Front bumper absorber (see page 20-239)

2. Remove the three bolts, and pull the headlight (A) out slightly.

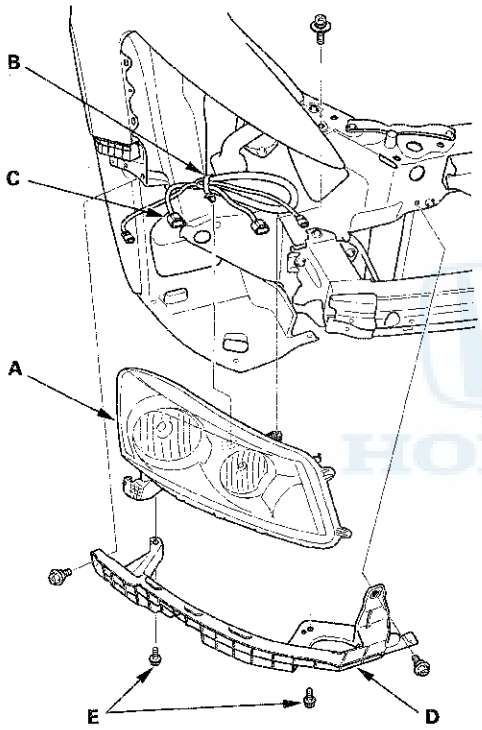

3. Remove the harness clip (B) from the headlight housing, and disconnect the connectors (C) from the bulb sockets.

4. Remove the headlight with the corner upper beam (D).

   NOTE: Be careful not to scratch the headlight lens and the fender.

5. Remove the two bolts (E) and the corner upper beam from the headlight.

6. Install the headlight in the reverse order of removal.

7. After replacement, adjust the headlight.

2-door

1. Remove the parts shown.

   - Upper fender trim (see page 20-260)
   - Front bumper (see page 20-239)
   - Front bumper absorber (see page 20-239)

2. Remove the three bolts, and pull the headlight (A) out slightly.

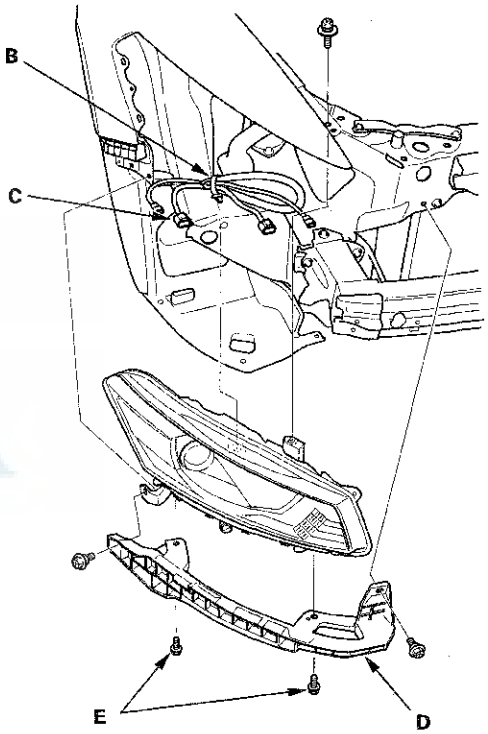

3. Remove the harness clip (B) from the headlight housing, and disconnect the connectors (C) from the bulb sockets.

4. Remove the headlight with the corner upper beam (D).

   NOTE: Be careful not to scratch the headlight lens and the fender.

5. Remove the two bolts (E) and the corner upper beam from the headlight.

6. Install the headlight in the reverse order of removal.

7. After replacement, adjust the headlight.

Bulb Replacement

Headlight (High Beam)

1. Disconnect the 2P connector (A) from the headlight.

   Headlight (High Beam): 60 W

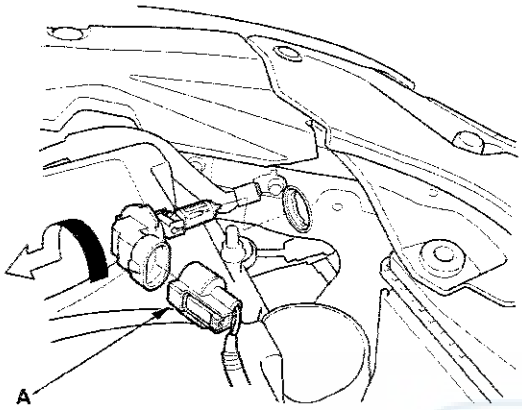

2. Turn the bulb socket 45 ° counterclockwise to remove the bulb.
3. Install a new bulb in the reverse order of removal.

Headlight (Low Beam)

1. Remove the inner fender (see page 20-273).
2. Disconnect the 2P connector (A) from the headlight.

   Headlight (Low Beam):
   51 W (4-door)
   55 W (2-door)

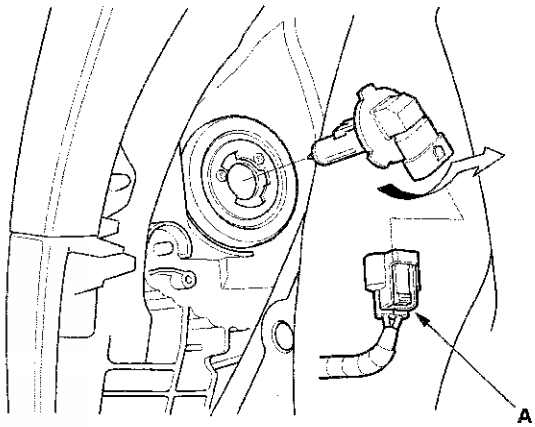

3. Turn the bulb socket 45 ° counterclockwise to remove the bulb.
4. Install a new bulb in the reverse order of removal.

(cont'd)

Bulb Replacement (cont'd)

Front Turn Signal/Parking Lights

1. Disconnect the 3P connector (A) from the front turn signal/parking lights.

   Front Turn Signal/Parking Lights:
   21 W/5 W (4-door)
   24 CP/2.2 CP (2-door)

   NOTE: The illustration shows 4-door models.

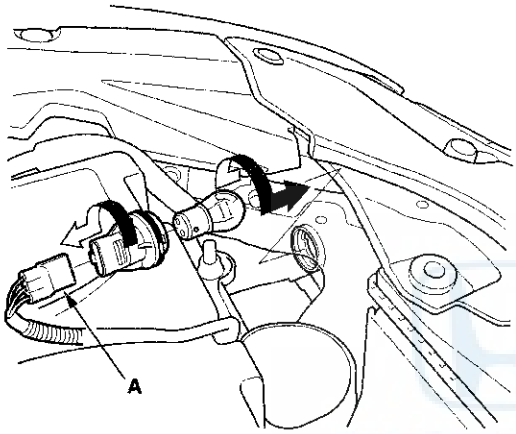

2. Turn the bulb socket 45 ° counterclockwise to remove the bulb.

3. Install a new bulb in the reverse order of removal.

Front Side Marker Light

1. Remove the inner fender (see page 20-273).

2. Disconnect the 2P connector (A) from the front side marker light.

   Front Side Marker Light: 3 CP

   NOTE: The illustration shows 4-door models.

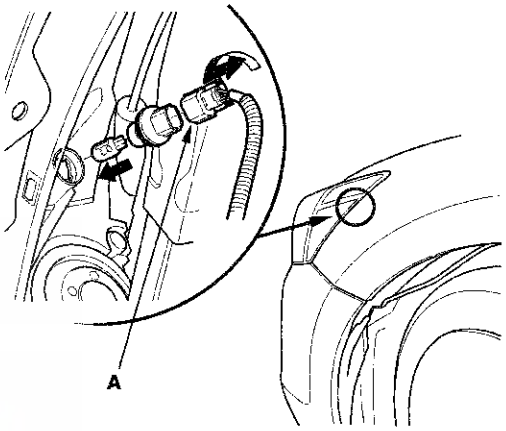

3. Turn the bulb socket 45 ° counterclockwise to remove the bulb.

4. Install a new bulb in the reverse order of removal.

Taillights (4-door)

1. Open the trunk lid, and remove the trunk side trim panel (see page 20-123).

2. Disconnect the connectors from the lights.

   Brake Lights/Taillights:21/5 W
   Rear Turn Signal Light: 21 W
   Back-up Light: 21 W

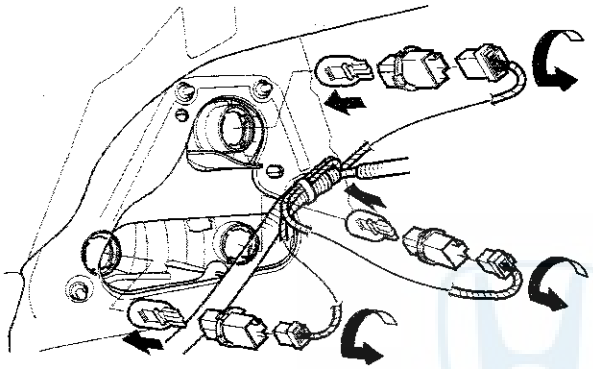

3. Turn the bulb socket 45 ° counterclockwise to remove the bulb.

4. Install new bulb(s) in the reverse order of removal.

Taillights (2-door)

1. Open the trunk lid, and remove the trunk side trim panel (see page 20-123).

2. Disconnect the connectors from the lights.

   Brake Lights/Taillights:21/5 W
   Rear Turn Signal Light: 21 W
   Back-up Light: 21 W

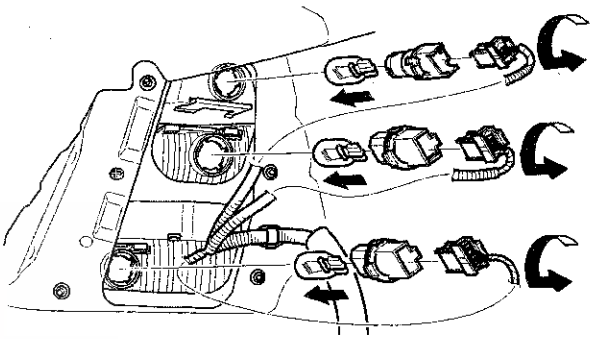

3. Turn the bulb socket 45 ° counterclockwise to remove the bulb.

4. Install new bulb(s) in the reverse order of removal.

Taillight Replacement

4-door

1. Remove the rear bumper (see page 20-244).
2. Remove the trunk side trim panel (see page 20-123).
3. Disconnect the connectors (A) from the taillights (B).

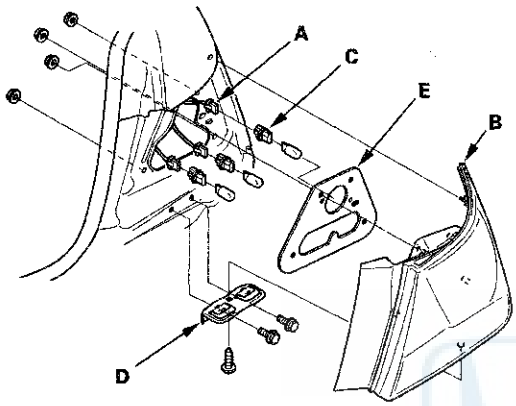

4. Turn the bulb sockets 45 ° counterclockwise to remove the bulb sockets (C).
5. Remove the mounting nuts and bolts, then remove the taillight.
6. Remove the screw and separate the taillight and bracket (D).
7. Inspect the gasket (E); replace it if it is distorted or stays compressed.
8. Install the taillight in the reverse order of removal, and tighten the nuts to 5 N·m (0.5 kgf·m, 4 lbf·ft).

2-door

1. Remove the rear bumper (see page 20-244).
2. Remove the trunk side trim panel (see page 20-123).
3. Disconnect the connectors (A) from the taillights (B).

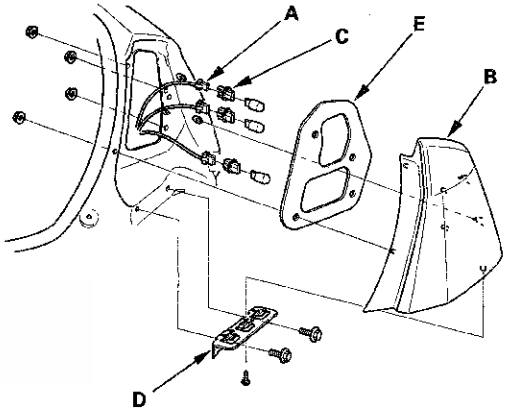

4. Turn the bulb sockets 45 ° counterclockwise to remove the bulb sockets (C).
5. Remove the mounting nuts and bolts, then remove the taillight.
6. Remove the screw and separate the taillight and bracket (D).
7. Inspect the gasket (E); replace it if it is distorted or stays compressed.
8. Install the taillight in the reverse order of removal, and tighten the nuts to 5 N·m (0.5 kgf·m, 4 lbf·ft).

License Plate Light Replacement

4-door

1. Pull the license plate light assembly out, and disconnect the 2P connector (A) from the light.

   License Plate Light: 5 W

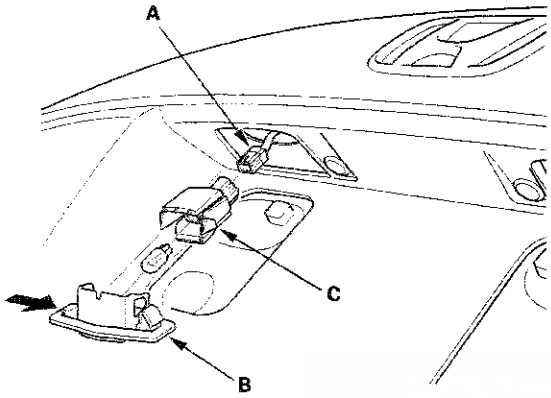

2. Separate the lens (B) and housing (C), then remove the bulb.

3. Install the light in the reverse order of removal.

2-door

1. Remove the license plate light (A), and disconnect the 2P connector (B) from the light.

   License Plate Light: 5 W

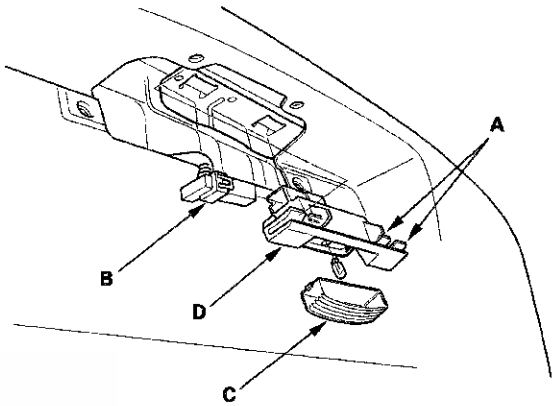

2. Separate the lens (C) and housing (D), then remove the bulb.

3. Install the light in the reverse order of removal.

High Mount Brake Light Replacement

1. Open the trunk lid.
2. Disconnect the 2P connector (A) from the high mount brake light.

   High Mount Brake Light: 21 W

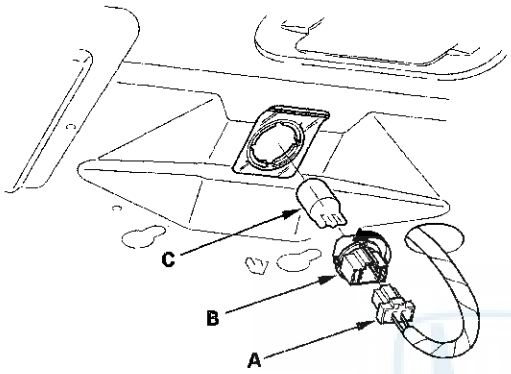

3. Turn the bulb socket (B) 45 ° counterclockwise to remove the bulb (C).
4. Remove the rear shelf (see page 20-119).
5. Remove the high mount brake light (A).

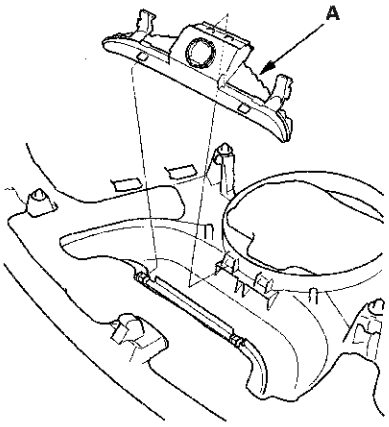

6. Install the light in the reverse order of removal.

Brake Pedal Position Switch Test

1. Disconnect the 4P connector (A) from the brake pedal position switch (B).

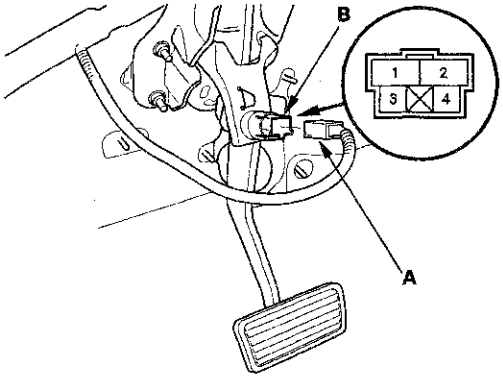

2. Check for continuity between the terminals No. 1 and No. 2.
   - There should be continuity when the brake pedal is pressed.
   - There should be no continuity when the brake pedal is released.
3. Check for continuity between the terminals No. 3 and No. 4.
   - There should be no continuity when the brake pedal is pressed.
   - There should be continuity when the brake pedal is released.
4. If necessary, adjust or replace the switch, or adjust the pedal height (see page 19-6).

Turn Signal/Hazard Warning Lights

Component Location Index

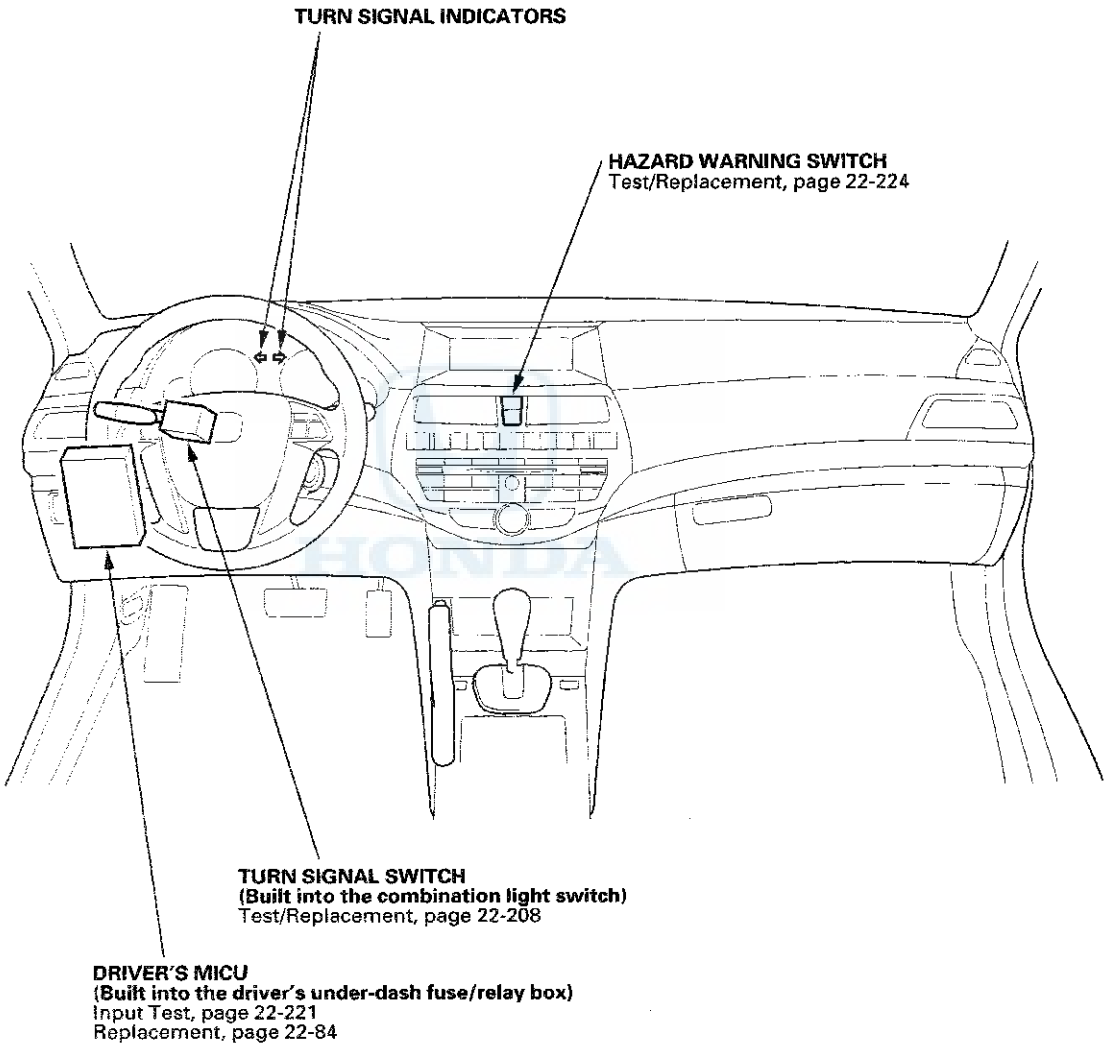

Turn Signal/Hazard Warning Lights

Circuit Diagram

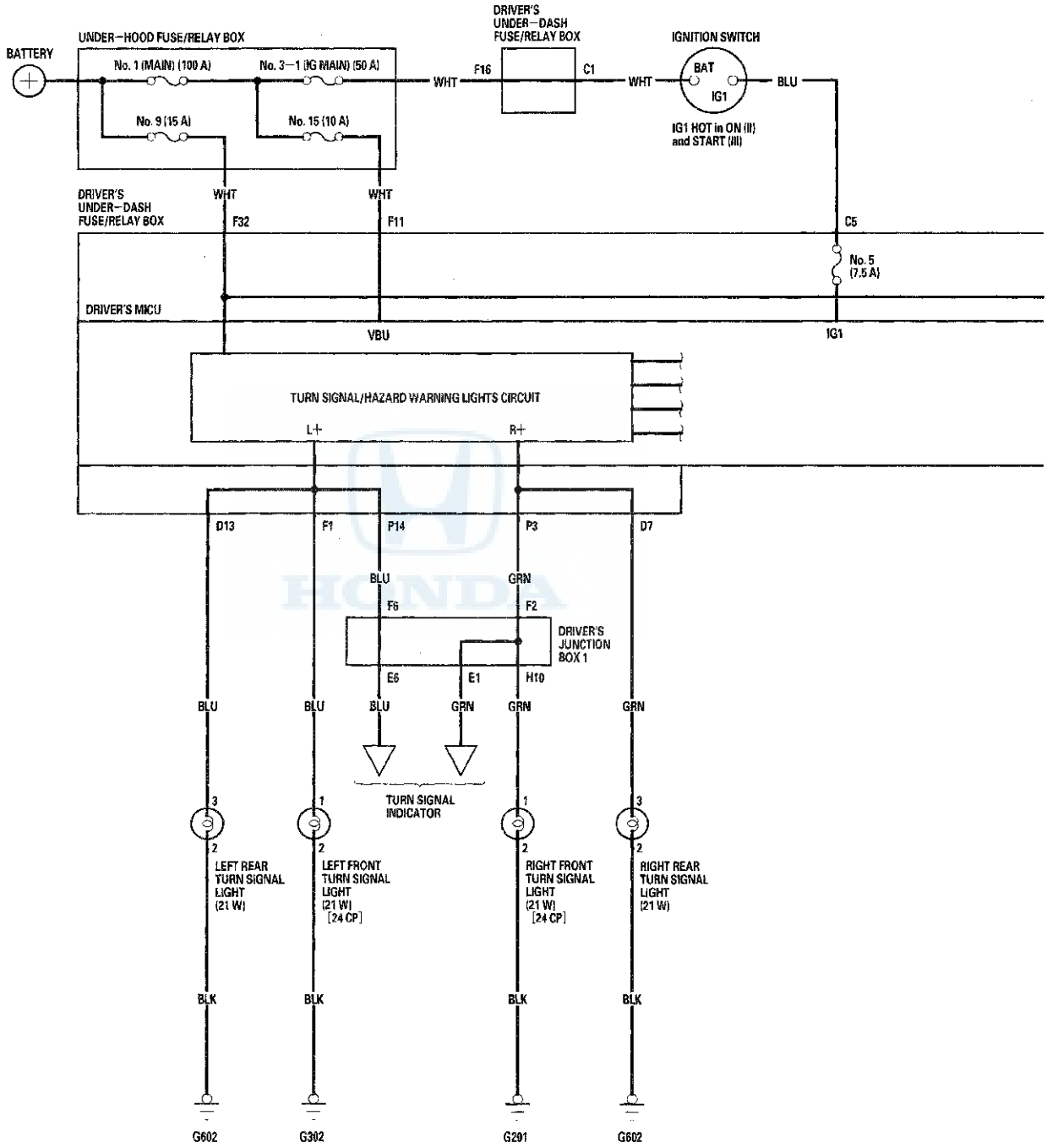

[ ]: 2-door

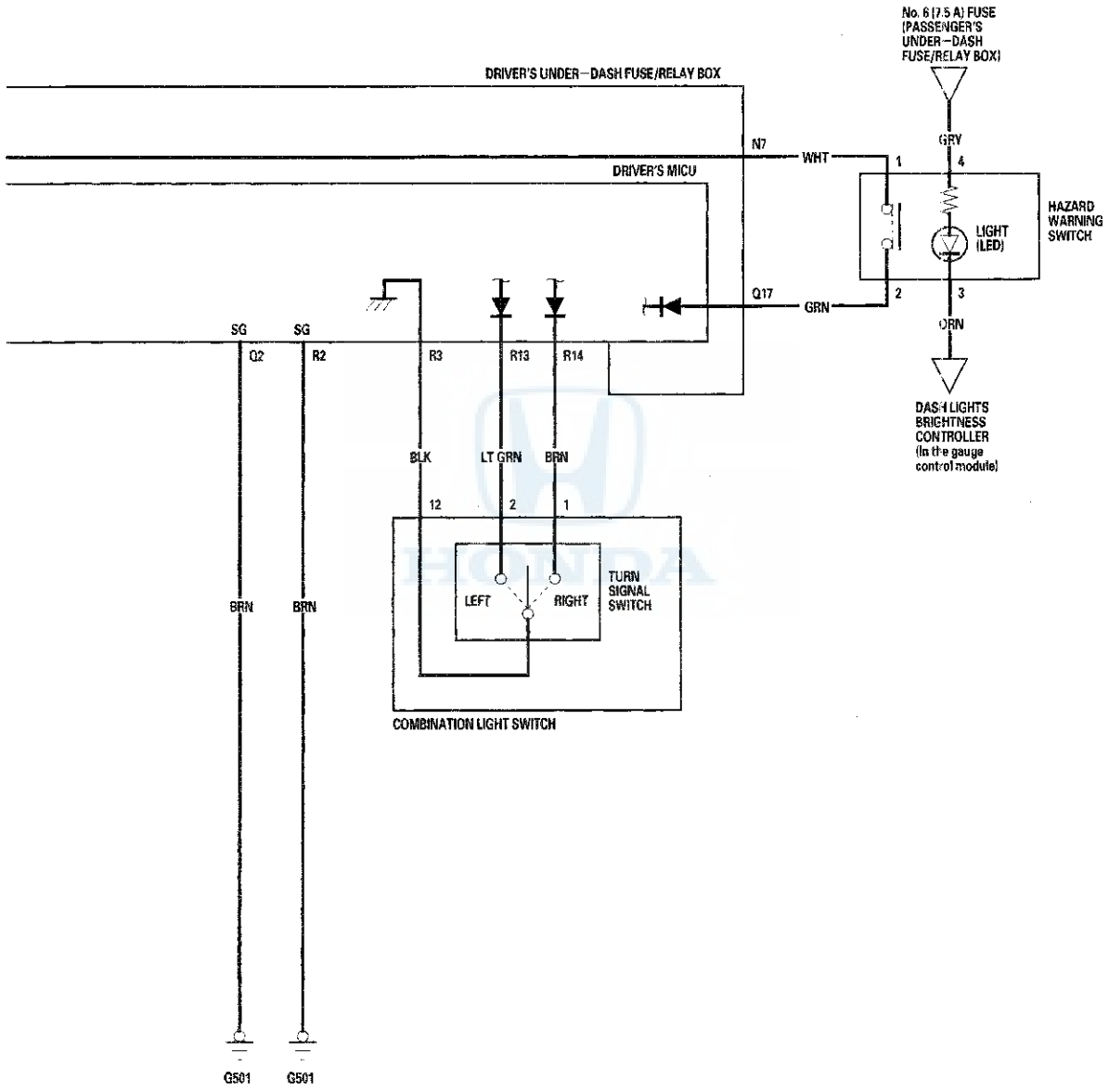
No. 6 (7.5 A) FUSE
(PASSENGER'S
UNDER-DASH
FUSE/RELAY BOX)
DRIVER'S UNDER-DASH FUSE/RELAY BOX
N7
WHT
GRY
4
1
DRIVER'S MICU
HAZARD
WARNING
SWITCH
LIGHT
(LED)
Q17
GRN
2
3
ORN
SG
SG
Q2
R2
R3
R13
R14
DASH LIGHTS
BRIGHTNESS
CONTROLLER
(In the gauge
control module)
BLK
LT GRN
BRN
12
2
1
TURN
SIGNAL
SWITCH
LEFT
RIGHT
BRN
BRN
COMBINATION LIGHT SWITCH
G501
G501

DTC Troubleshooting

DTC B1280: Turn Signal Switch Circuit Malfunction

NOTE: If you are troubleshooting multiple DTCs, be sure to follow the instructions in B-CAN System Diagnosis Test Mode A (see page 22-120).

1. Clear the DTCs with the HDS.
2. Turn the ignition switch to LOCK (0) and then back to ON (II).
3. Operate the turn signal switch in left and right positions, and wait for 6 seconds or more.
4. Check for DTCs with the HDS.

   Is DTC B1280 indicated?

   YES—Go to step 5.

   NO—Intermittent failure, the system is OK at this time. Check for loose or poor connections. ■

5. Select LIGHTING from the BODY ELECTRICAL system select menu, then enter the DATA LIST.
6. Check each turn signal switch position value with the DATA LIST menu.

   When the turn signal switch is in left position

Data List	Value
Turn Signal Switch (LEFT)	ON
Turn Signal Switch (RIGHT)	OFF

   When the turn signal switch is in right position

Data List	Value
Turn Signal Switch (LEFT)	OFF
Turn Signal Switch (RIGHT)	ON

   Are all data list values correct?

   YES—Faulty driver's MICU; replace the driver's under-dash fuse/relay box (see page 22-84). ■

   NO—Go to step 7.

7. Turn the ignition switch to LOCK (0).
8. Disconnect the combination light switch 12P connector.
9. Disconnect driver's under-dash fuse/relay box connector R (24P).
10. Check for continuity between body ground and driver's under-dash fuse/relay box connector R (24P) terminals No. 13 and No. 14.

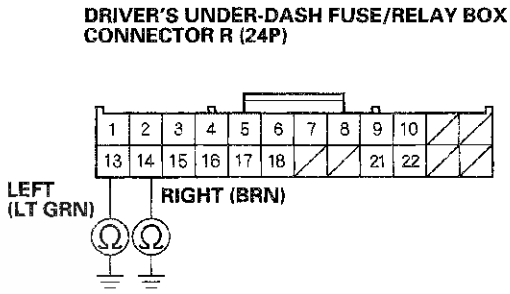

Wire side of female terminals

   Is there continuity?

   YES—Repair a short to ground in the wire. ■

   NO—Go to step 11.

11. Check for continuity between driver's under-dash fuse/relay box connector R (24P) terminals No. 13 and No. 14.

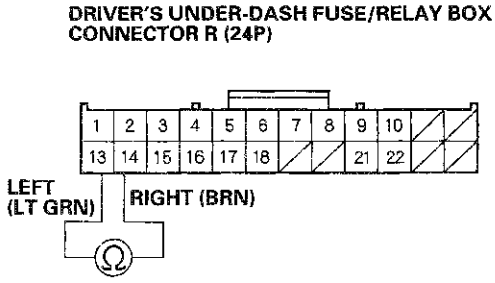

Wire side of female terminals

   Is there continuity?

   YES—Repair a short between the wires. ■

   NO—Replace the combination light switch. ■

MICU Input Test

NOTE:
- Before testing, troubleshoot the multiplex integrated control unit first, using B-CAN System Diagnosis Test Mode A (see page 22-120).
- Before testing, make sure the No. 5 (7.5 A) fuse in the driver's under-dash fuse/relay box is OK.

Driver's MICU

1. Turn the ignition switch to LOCK (0), and remove the driver's dashboard lower cover (see page 20-153).

2. Disconnect driver's under-dash fuse/relay box connectors D, F, N, P, Q, and R.

   NOTE: All connector views are wire side of female terminals.

CONNECTOR D (16P)

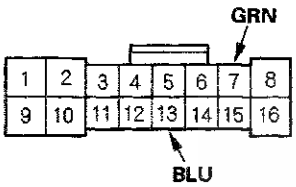

CONNECTOR P (20P)

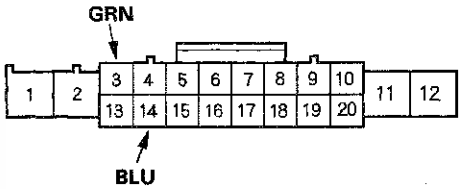

CONNECTOR F (33P)

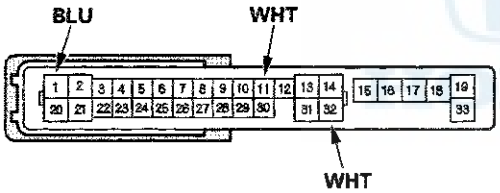

CONNECTOR Q (20P)

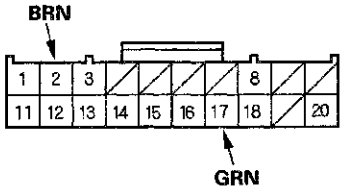

CONNECTOR N (16P)

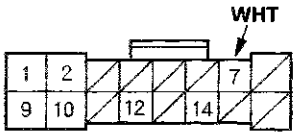

CONNECTOR R (24P)

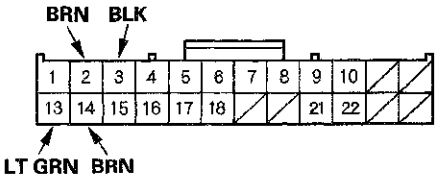

3. Inspect the connector and socket terminals to be sure they are all making good contact.

   - If the terminals are bent, loose or corroded, repair them as necessary and recheck the system.
   - If the terminals look OK, go to step 4.

(cont'd)

MICU Input Test (cont'd)

4. With the connectors still disconnected, make these input tests at the appropriate connector.

   - If any test indicates a problem, find and correct the cause, then recheck the system.
   - If all the input tests prove OK, go to step 5.

Cavity	Wire	Test condition	Test: Desired result	Possible cause if desired result is not obtained
F11	WHT	Under all conditions	Measure the voltage to ground: There should be battery voltage.	• Blown No. 15 (10 A) fuse in the under-hood fuse/relay box • An open in the wire
F32	WHT	Under all conditions	Measure the voltage to ground: There should be battery voltage.	• Blown No. 9 (15 A) fuse in the under-hood fuse/relay box • An open in the wire
D7	GRN	Under all conditions	Connect terminals F32 and D7 with a jumper wire: The right rear turn signal light should come on.	• Poor ground (G602) • Blown bulb • An open in the wire
D13	BLU	Under all conditions	Connect terminals F32 and D13 with a jumper wire: The left rear turn signal light should come on.	• Poor ground (G602) • Blown bulb • An open in the wire
F1	BLU	Under all conditions	Connect terminals F32 and F1 with a jumper wire: The left front turn signal light should come on.	• Poor ground (G302) • Blown bulb • An open in the wire
P3	GRN	Under all conditions	Connect terminals F32 and P3 with a jumper wire: The right front turn signal light and the right turn signal indicator should come on.	• Poor ground (G201) • Blown bulb • Faulty gauge control module • Faulty indicator • An open in the wire
P14	BLU	Under all conditions	Connect terminals F32 and P14 with a jumper wire: The left turn signal indicator should come on.	• Faulty gauge control module • Faulty indicator • An open in the wire • Poor ground (G302)

5. Reconnect the connectors to the driver's under-dash fuse/relay box, and make these input tests at the connectors.

- If any test indicates a problem, find and correct the cause, then recheck the system.
- If all the input tests prove OK, the driver's MICU must be faulty; replace the driver's under-dash fuse/relay box (see page 22-84).

Cavity	Wire	Test condition	Test: Desired result	Possible cause if desired result is not obtained
Q2	BRN	Under all conditions	Measure the voltage to ground: There should be 0.5 V or less.	• Poor ground (G501) • An open in the wire
R2	BRN	Under all conditions	Measure the voltage to ground: There should be 0.5 V or less.	• Poor ground (G501) • An open in the wire
N7	WHT	Under all conditions	Measure the voltage to ground: There should be battery voltage.	• Faulty driver's under-dash fuse/relay box • A short to ground in the wire
Q17	GRN	Hazard warning switch pressed	Measure the voltage to ground: There should be battery voltage.	• Faulty hazard warning switch • An open in the wire
R13 · R3	LT GRN · BLK	Ignition switch ON (II), turn signal switch in left position	Measure the voltage between terminals R13 and R3: There should be less than 1 V.	• Faulty combination light switch • An open in the wire
		Ignition switch ON (II), turn signal switch in right or neutral position	Measure the voltage between terminals R13 and R3: There should be 5 V or more.	• Faulty combination light switch • A short to ground in the wire
R14 · R3	BRN · BLK	Ignition switch ON (II), turn signal switch in right position	Measure the voltage between terminals R14 and R3: There should be less than 1 V.	• Faulty combination light switch • An open in the wire
		Ignition switch ON (II), turn signal switch in left or neutral position	Measure the voltage between terminals R14 and R3: There should be 5 V or more.	• Faulty combination light switch • A short to ground in the wire

Hazard Warning Switch Test/Replacement

1. Remove the center vent (see page 20-164).

2. Remove the hazard warning switch (A).

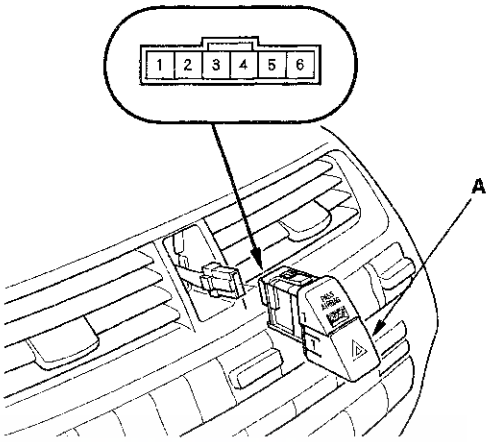

3. Check for continuity between the terminals in each switch position according to the table.

   NOTE: Make sure the correct test lead (+ or −) is placed on the terminal.

Position \ Terminal	1	2	4		3
OFF			⊕	⊳	⊖
ON	○	○	⊕	⊳	⊖

4. If the continuity is not as specified, replace the hazard warning switch.

Component Location Index

4-door

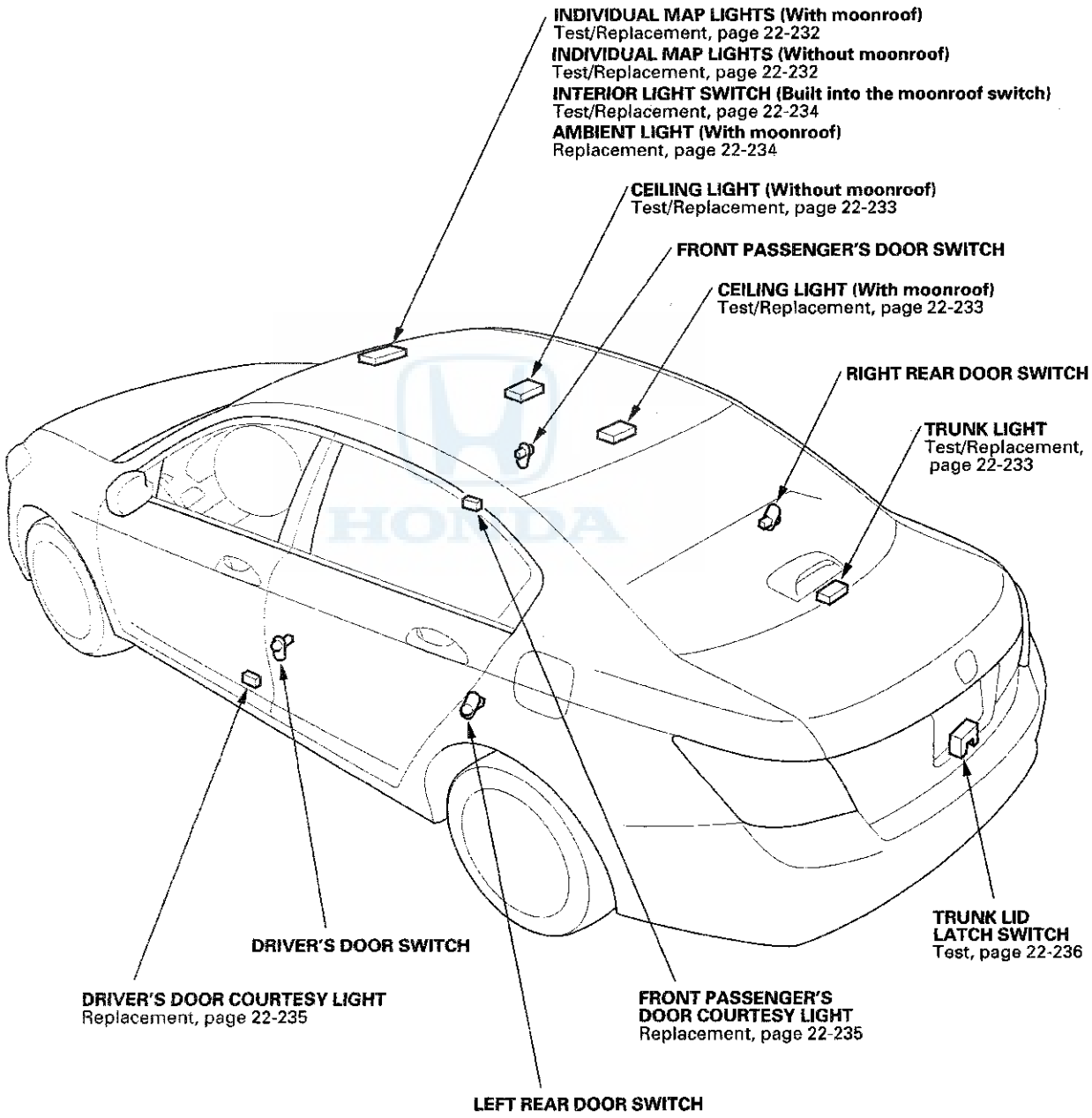

(cont'd)

Component Location Index (cont'd)

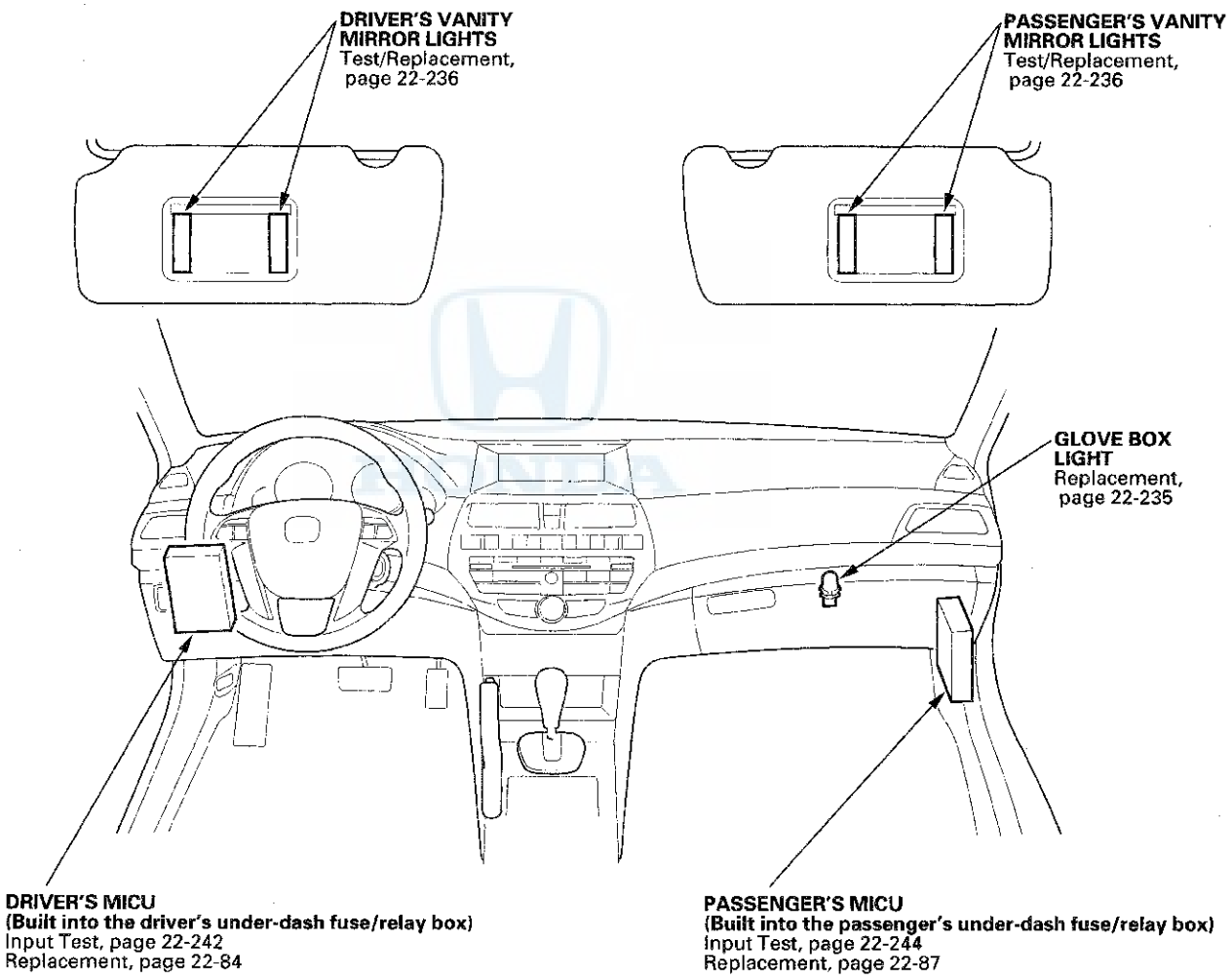

2-door

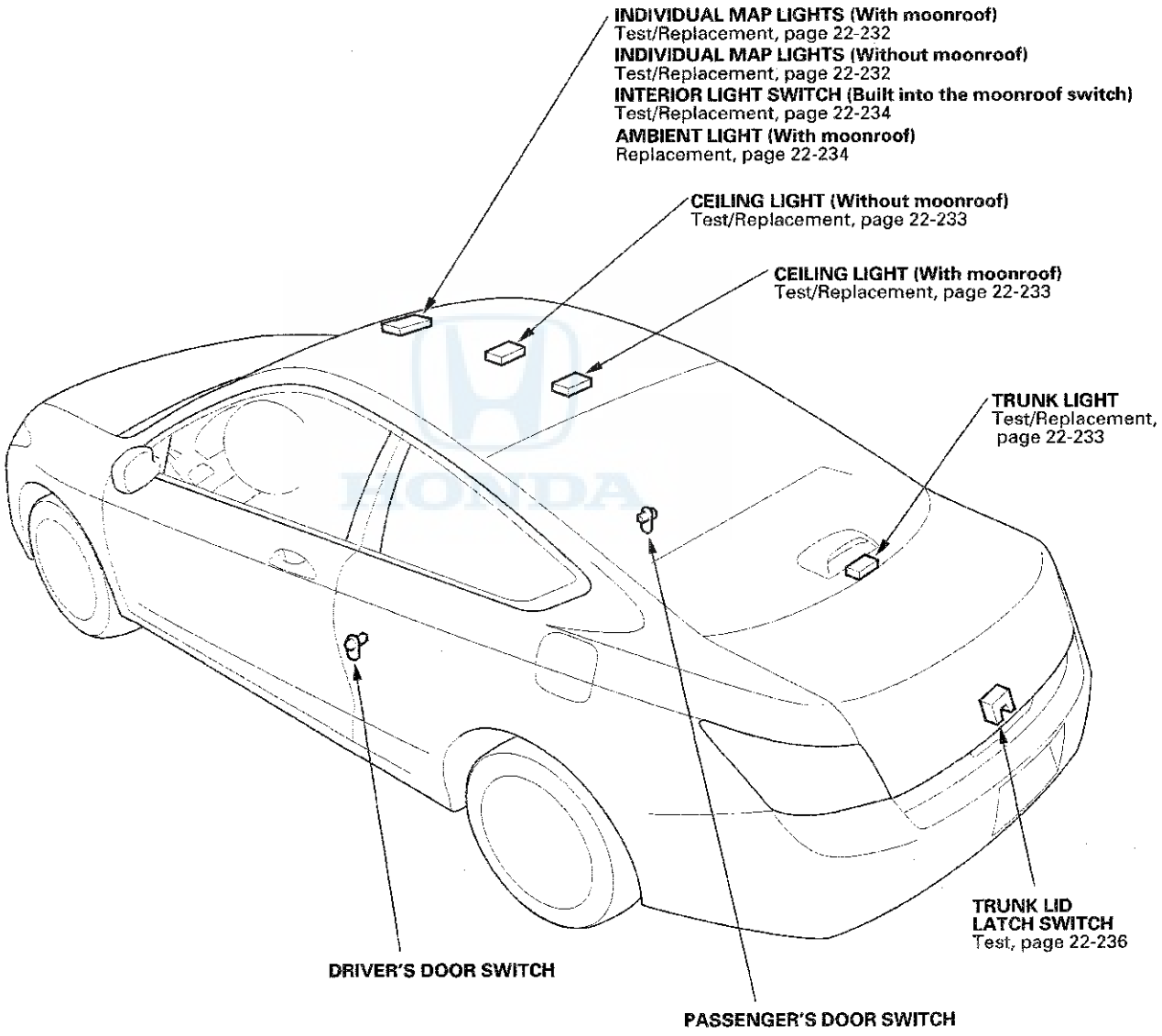
INDIVIDUAL MAP LIGHTS (With moonroof)
Test/Replacement, page 22-232
INDIVIDUAL MAP LIGHTS (Without moonroof)
Test/Replacement, page 22-232
INTERIOR LIGHT SWITCH (Built into the moonroof switch)
Test/Replacement, page 22-234
AMBIENT LIGHT (With moonroof)
Replacement, page 22-234
CEILING LIGHT (Without moonroof)
Test/Replacement, page 22-233
CEILING LIGHT (With moonroof)
Test/Replacement, page 22-233
TRUNK LIGHT
Test/Replacement, page 22-233
TRUNK LID LATCH SWITCH
Test, page 22-236
DRIVER'S DOOR SWITCH
PASSENGER'S DOOR SWITCH

(cont'd)

Component Location Index (cont'd)

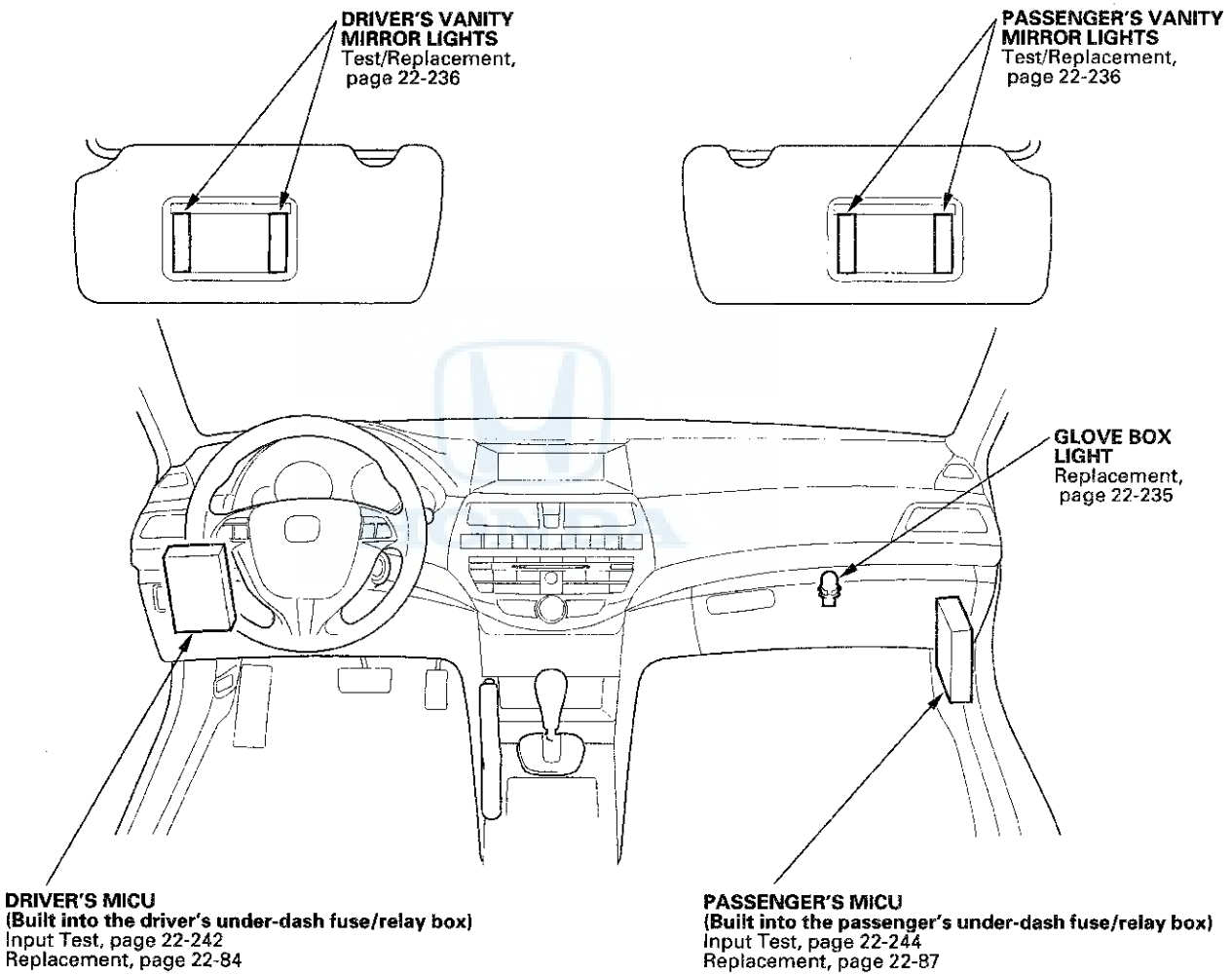

HONDA

Interior Lights

Circuit Diagram

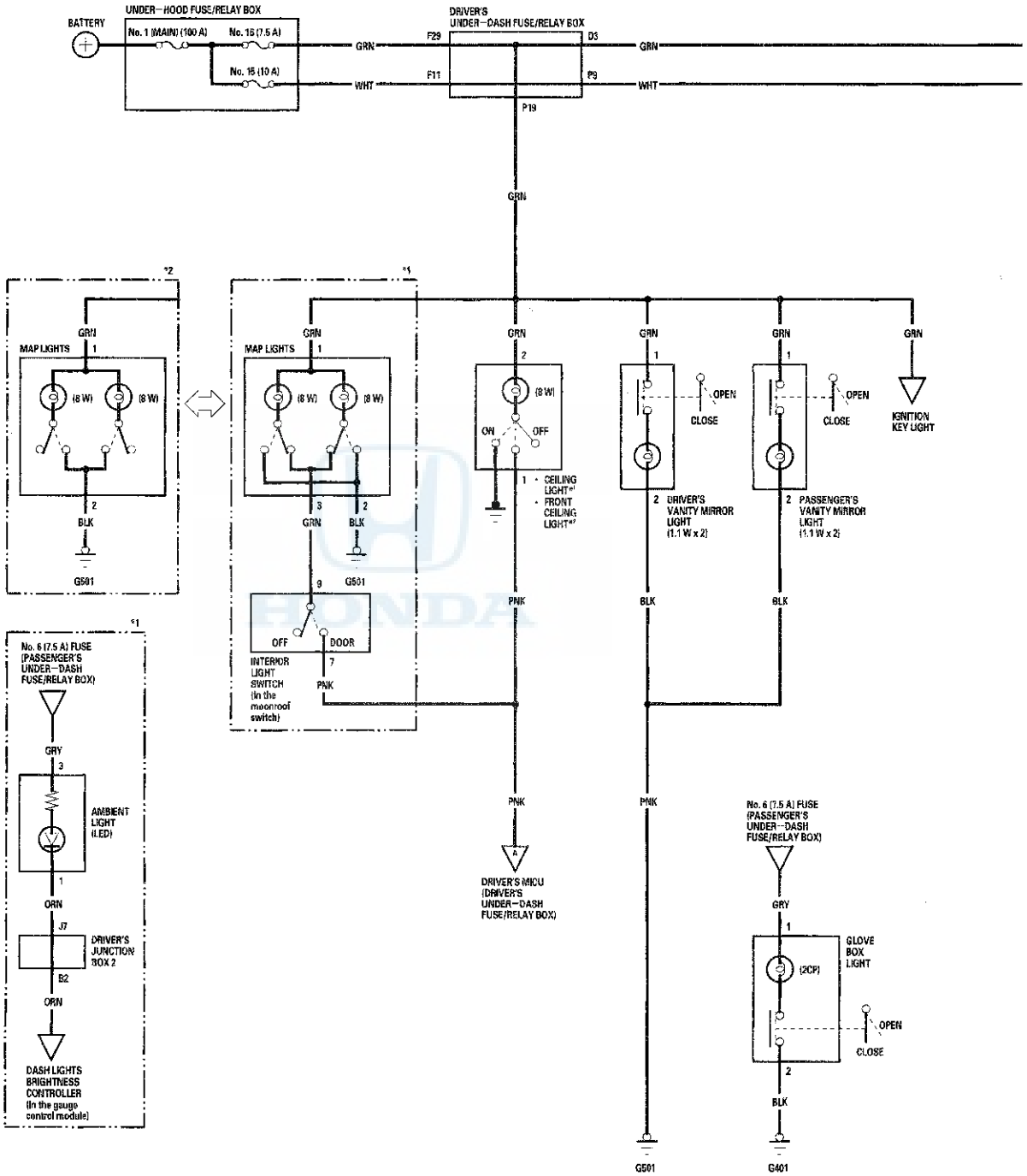

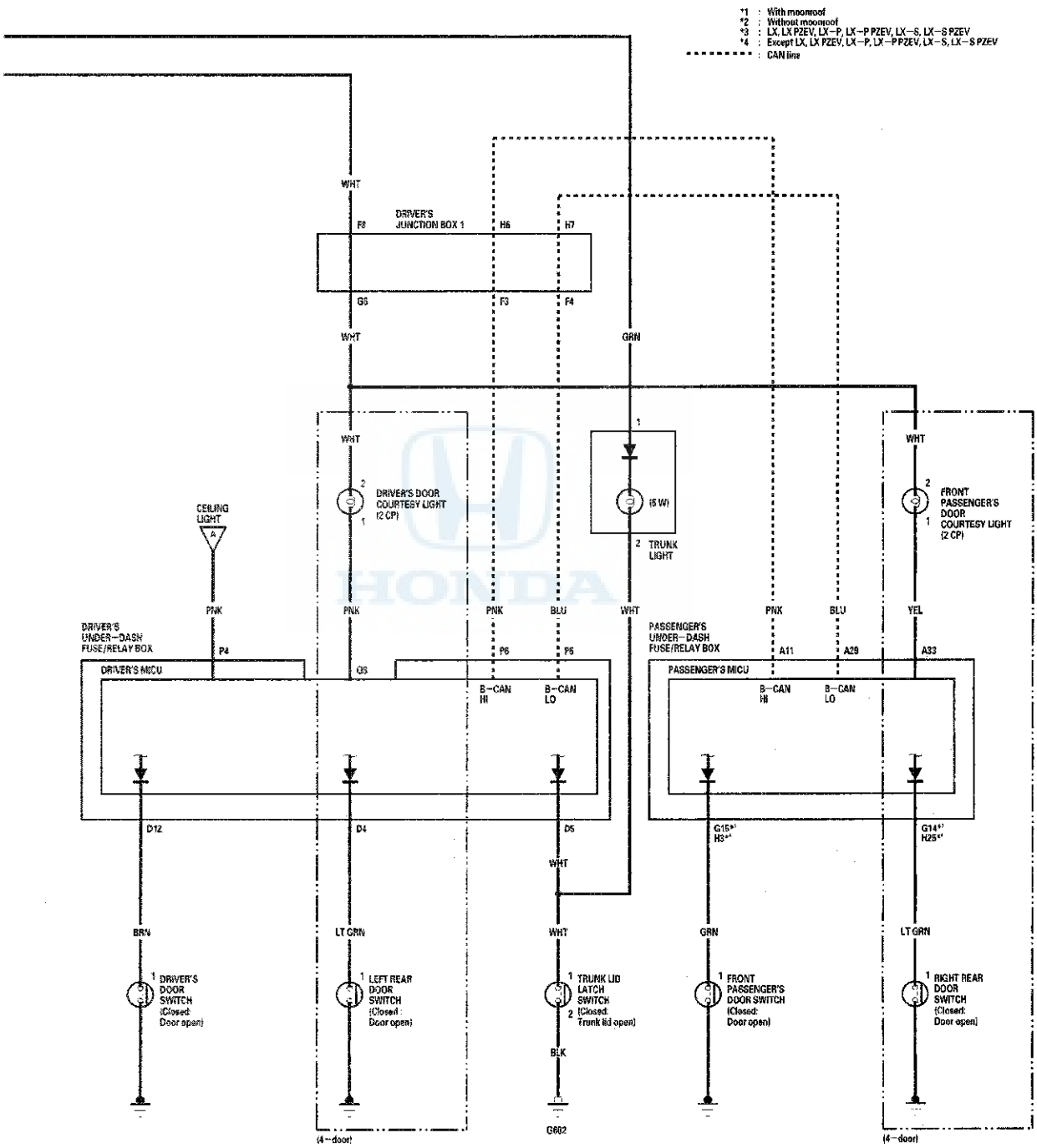
*1 : With moonroof
*2 : Without moonroof
*3 : LX, LX PZEV, LX-P, LX-P PZEV, LX-S, LX-S PZEV
*4 : Except LX, LX PZEV, LX-P, LX-P PZEV, LX-S, LX-S PZEV
: CAN line
DRIVER'S JUNCTION BOX 1
F8
H6
H7
G5
F3
F4
WHT
GRN
DRIVER'S DOOR COURTESY LIGHT (2 CP)
(5 W)
TRUNK LIGHT
FRONT PASSENGER'S DOOR COURTESY LIGHT (2 CP)
CEILING LIGHT
PNK
BLU
YEL
DRIVER'S UNDER-DASH FUSE/RELAY BOX
P4
P6
P5
PASSENGER'S UNDER-DASH FUSE/RELAY BOX
A11
A29
A33
DRIVER'S MICU
Q5
B-CAN HI
B-CAN LO
PASSENGER'S MICU
D12
D4
D5
G15*3 H3*4
G14*3 H25*4
BRN
LT GRN
BLK
DRIVER'S DOOR SWITCH (Closed: Door open)
LEFT REAR DOOR SWITCH (Closed: Door open)
TRUNK LID LATCH SWITCH (Closed: Trunk lid open)
FRONT PASSENGER'S DOOR SWITCH (Closed: Door open)
RIGHT REAR DOOR SWITCH (Closed: Door open)
(4-door)
G602
(4-door)

Front Individual Map Light Test/Replacement

With moonroof

1. Turn the map light switch OFF.
2. Carefully pry the lens (A) off with a small screwdriver.

   Front Map Light: 8 W x 2

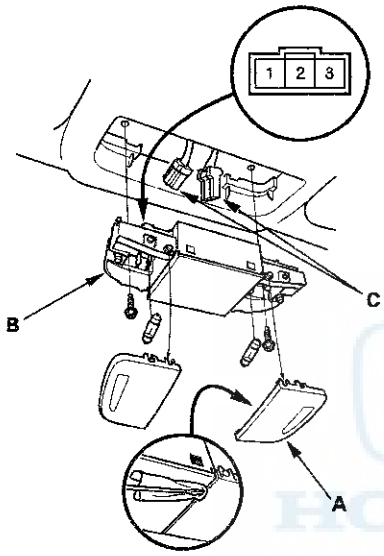

3. Remove the screws, then remove the map lights (B).
4. Disconnect the connectors (C) from the map lights.
5. Check for continuity between the terminals in each switch position according to the table.

Position \ Terminal		1		2	3
RIGHT	ON	○	⊕	○	
	OFF	○	⊕		○
LEFT	ON	○	⊕	○	
	OFF	○	⊕		○

6. If the continuity is not as specified, check the bulb(s). If the bulb(s) are OK, replace the map light.
7. Install the light in the reverse order of removal.

Without moonroof

1. Turn the map light switch OFF.
2. Carefully pry the lens (A) off with a small screwdriver.

   Front Map Light: 8 W x 2

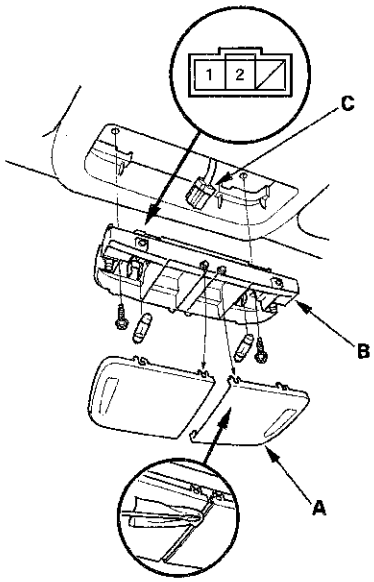

3. Remove the screws, then remove the map lights (B).
4. Disconnect the connector (C) from the map lights.
5. Check for continuity between the terminals.
   - There should be continuity between the terminals No. 1 and No. 2 with the switch in the ON position.
   - There should be no continuity between the terminals No. 1 and No. 2 with the switch in the OFF position.
6. If the continuity is not as specified, check the bulb. If the bulb is OK, replace the map light.
7. Install the light in the reverse order of removal.

Ceiling Light Test/Replacement

1. Turn the ceiling light switch OFF.
2. Carefully pry the lens (A) off with a small screwdriver.

   Ceiling Light: 8 W

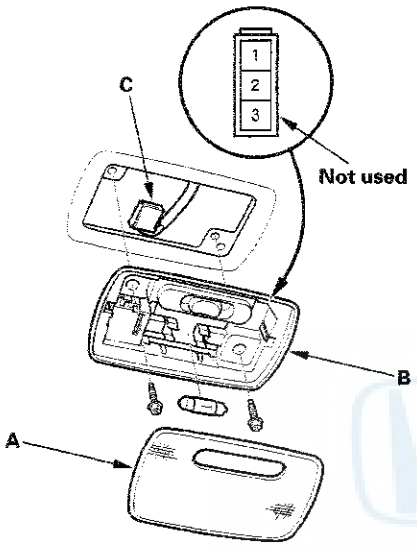

3. Remove the screws, then remove the ceiling light (B).
4. Disconnect the 3P connector (C) from the ceiling light.
5. Check for continuity between the terminals.
   - There should be continuity between the terminals No. 1 and No. 2 with the switch in the MIDDLE position.
   - There should be continuity between the terminals No. 2 and No. 3 (body ground) with the switch in the ON position.
   - There should be no continuity between the terminals No. 1 and No. 2, and between the terminals No. 2 and No. 3 (body ground) with the switch in the OFF position.
6. If the continuity is not as specified, check the bulb. If the bulb is OK, replace the ceiling light.
7. Install the light in the reverse order of removal.

Trunk Light Test/Replacement

1. Open the trunk lid.
2. Carefully pry out the trunk light (A).

   Trunk Light: 5 W

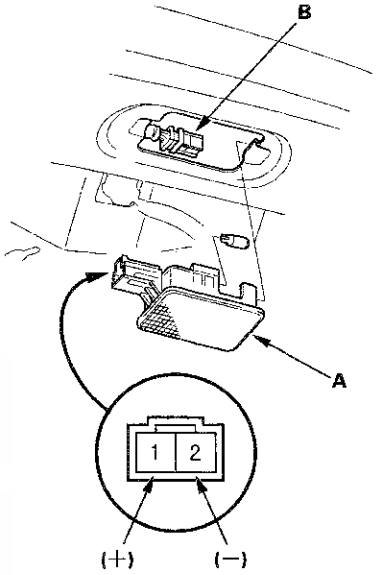

3. Disconnect the 2P connector (B) from the light.
4. Check for continuity between the terminals No. 1 (+) and No. 2 (−). There should be continuity. If there is no continuity, check the bulb. If the bulb is OK, replace the trunk light assembly.
5. Install the light in the reverse order of removal.

Interior Light Switch Test/ Replacement

With moonroof

NOTE: The interior light switch is built into the moonroof switch, and it switches the front individual map light OFF and DOOR positions.

1. Remove the front individual map lights (see page 22-232).
2. Disconnect the moonroof switch 12P connector (A) and the map light 3P connector (B).

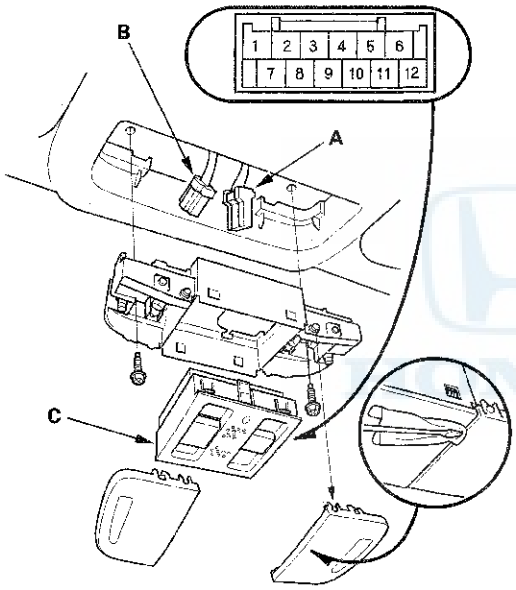

3. Remove the moonroof switch (C) from the map light housing.
4. At the moonroof switch 12P connector, check for continuity between the terminals No. 9 and No. 7.
   - There should be continuity when the interior light switch is in the DOOR position.
   - There should be no continuity when the interior light switch is in the OFF position.
5. If the continuity is not as specified, replace the moonroof switch assembly.
6. Install the parts in the reverse order of removal.

Ambient Light Replacement

With moonroof

NOTE: The ambient light is built into the moonroof switch.

1. Remove the front individual map lights (see page 22-232).
2. Disconnect the moonroof switch 12P connector (A) and the map light 3P connector (B).

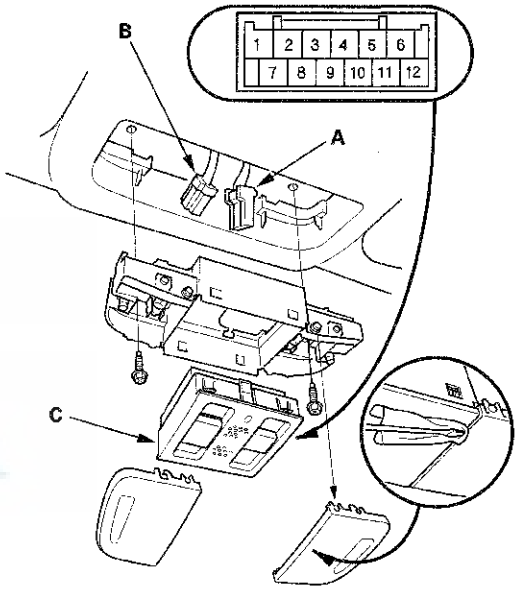

3. Remove the moonroof switch (C) from the map light housing.
4. At the moonroof switch 12P connector, check the light by connecting battery power to the terminal No. 3 and ground to the terminal No. 1. The ambient light should come on. If the light does not come on, replace the moonroof switch assembly.
5. Install the parts in the reverse order of removal.

Courtesy Light Replacement

1. Carefully pry off the lens (A) with a small screwdriver.

   Courtesy Light: 2 CP

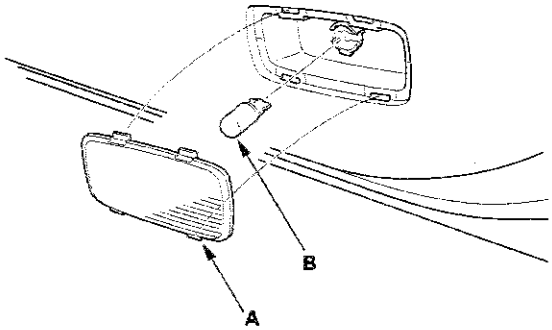

2. Remove the bulb (B) from the socket.
3. Install the light in the reverse order of removal.

Glove Box Light Replacement

1. Remove the glove box stops and damper (see page 20-161).
2. Turn the bulb socket (A) 45 ° counterclockwise to remove it.

   Glove Box Light: 2 CP

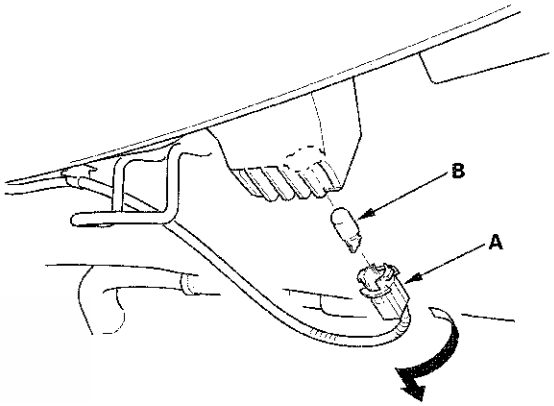

3. Remove the bulb (B) from the socket.
4. Install the light in the reverse order of removal.

Vanity Mirror Light Test/ Replacement

1. Remove the sunvisor (see page 20-127).
2. Disconnect the 2P connector (A) from the sunvisor (B).

   Vanity Mirror Light: 1.1 W x 2

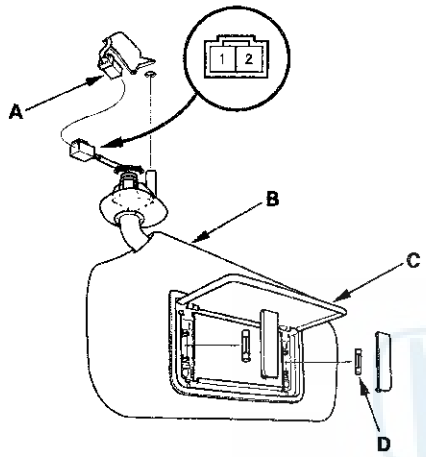

3. Check for continuity between the terminals No. 1 and No. 2.
   - With the vanity mirror cover (C) opened, there should be continuity.
   - With the vanity mirror cover closed, there should be no continuity.
4. If the continuity is not as specified, check the bulbs (D). If the bulbs are OK, replace the vanity mirror light.

Trunk Lid Latch Switch Test

1. Open the trunk lid.
2. Disconnect the 3P connector (A) from the trunk lid latch assembly (B).

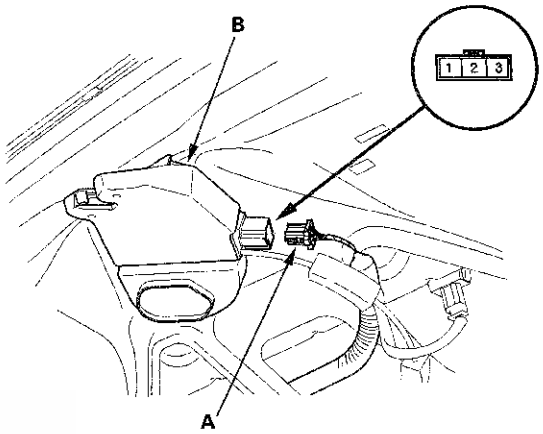

3. Check for continuity between the terminals No. 1 and No. 2.
   - There should be continuity with the trunk lid open.
   - There should be no continuity with the trunk lid closed.
4. If the continuity is not as specified, replace the trunk lid latch assembly.

Entry Lights Control System

Component Location Index

4-door with moonroof

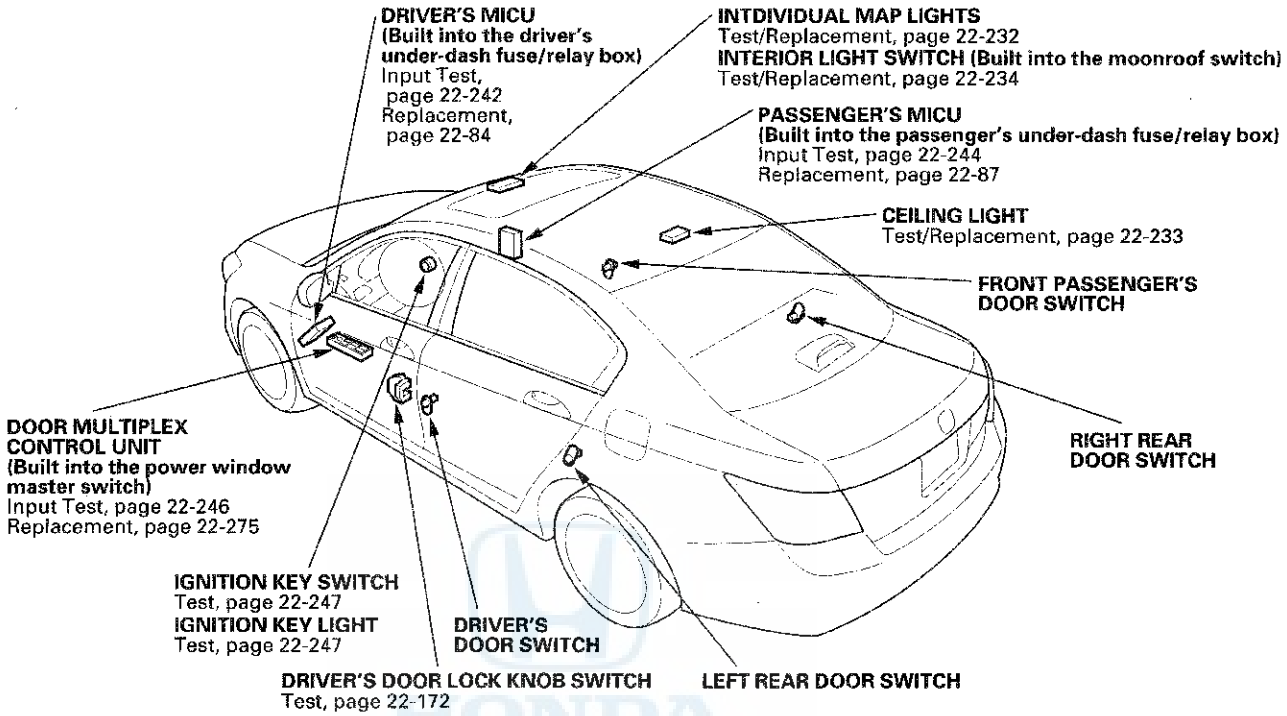

4-door without moonroof

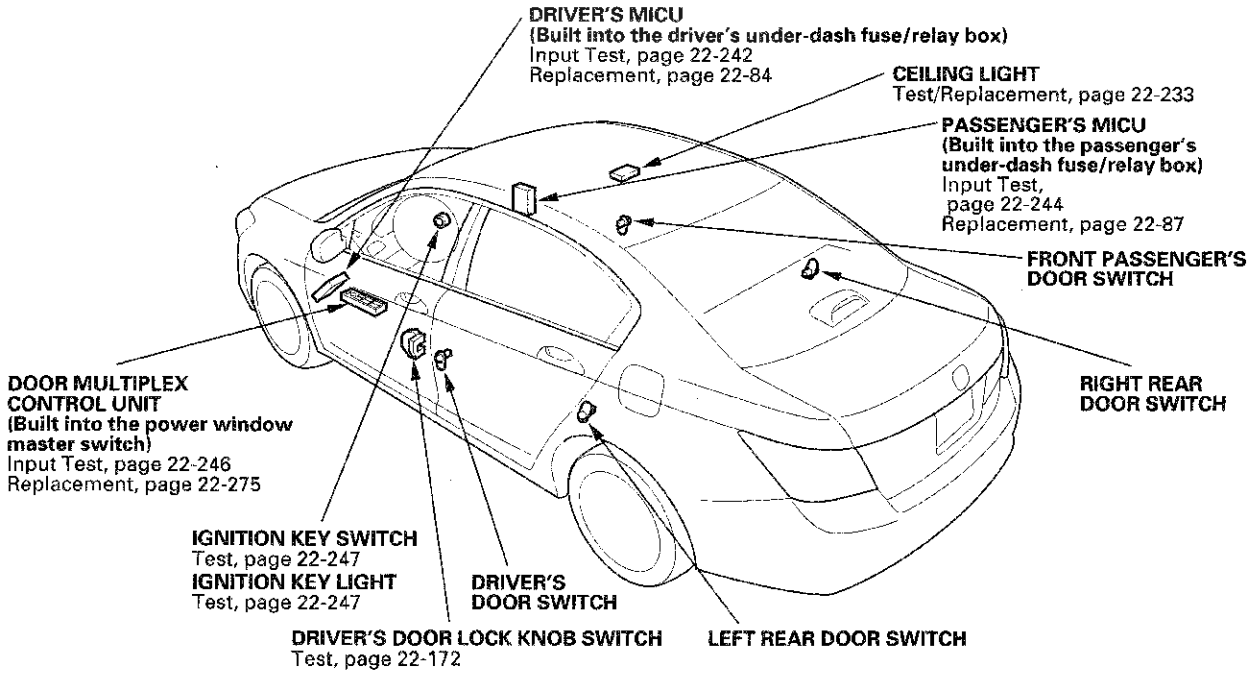

2-door with moonroof

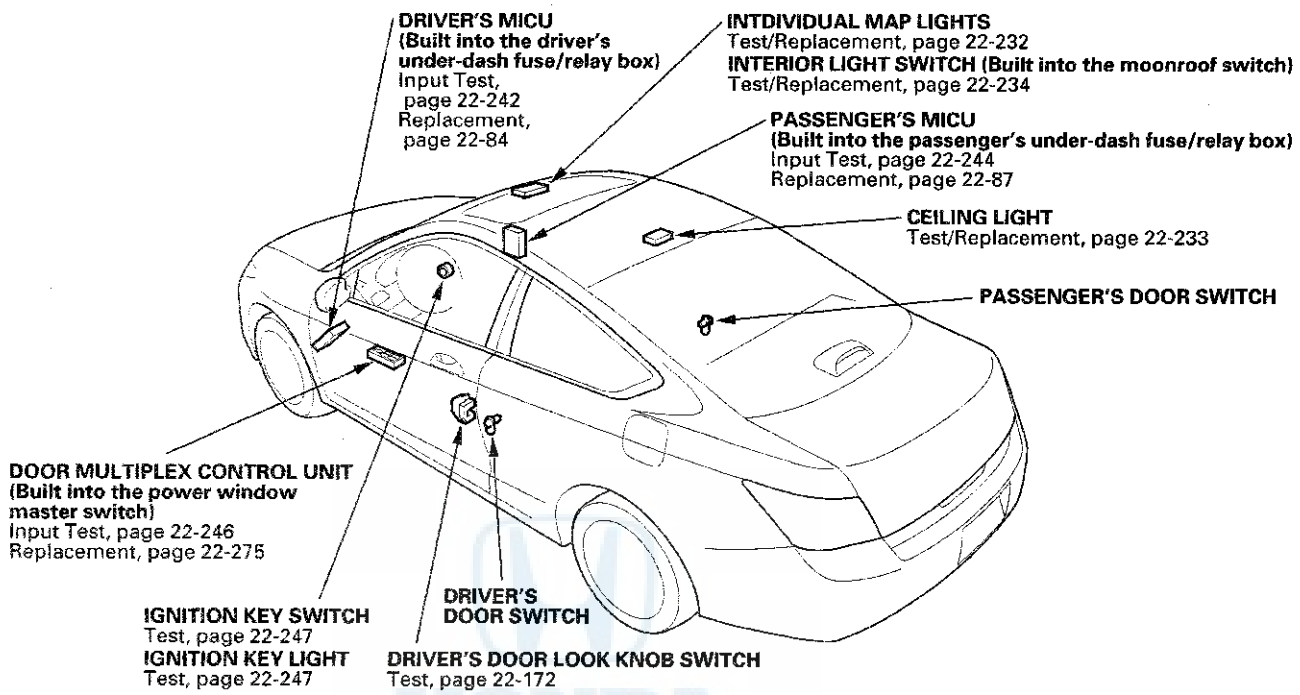

2-door without moonroof

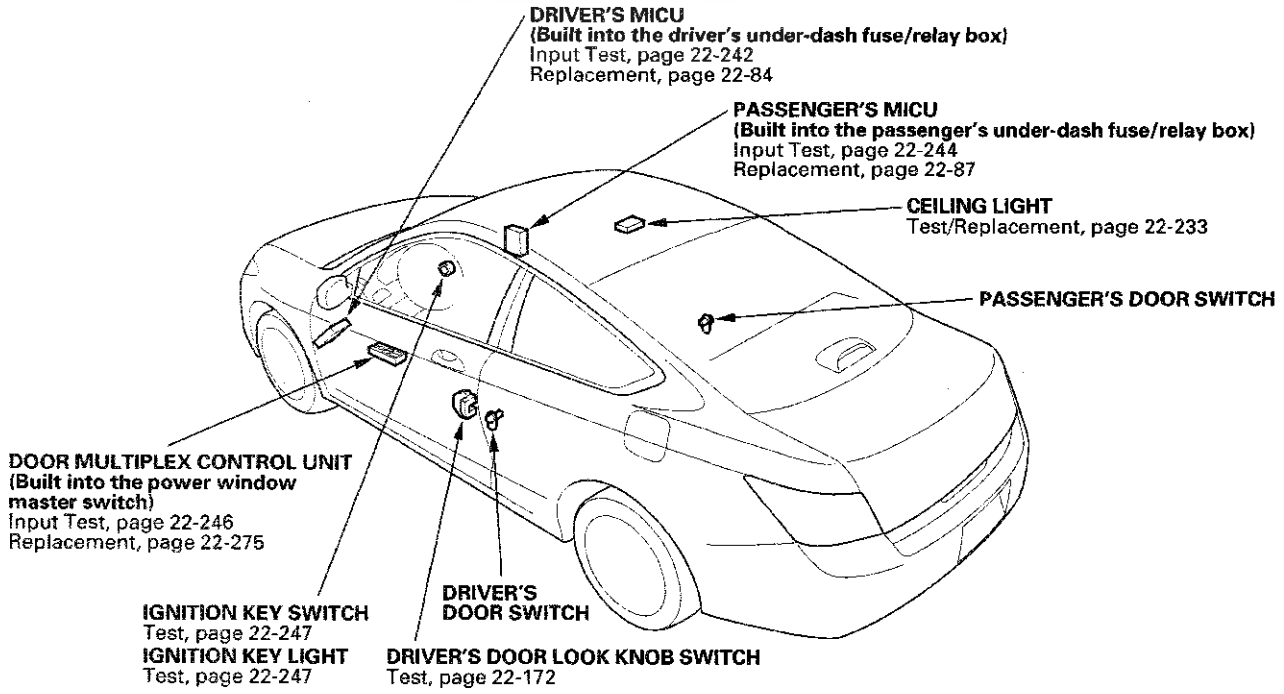

Entry Lights Control System

Circuit Diagram

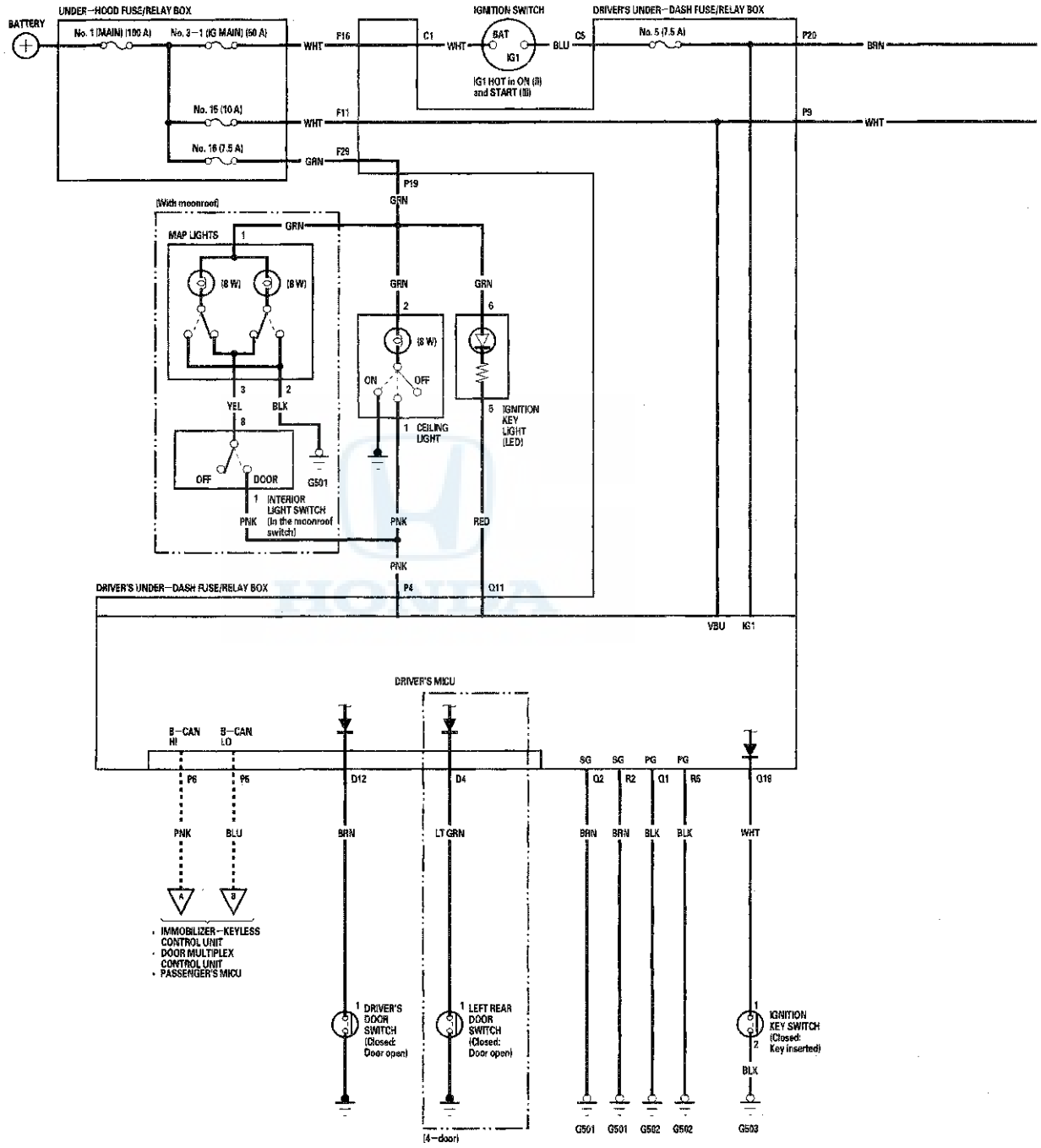

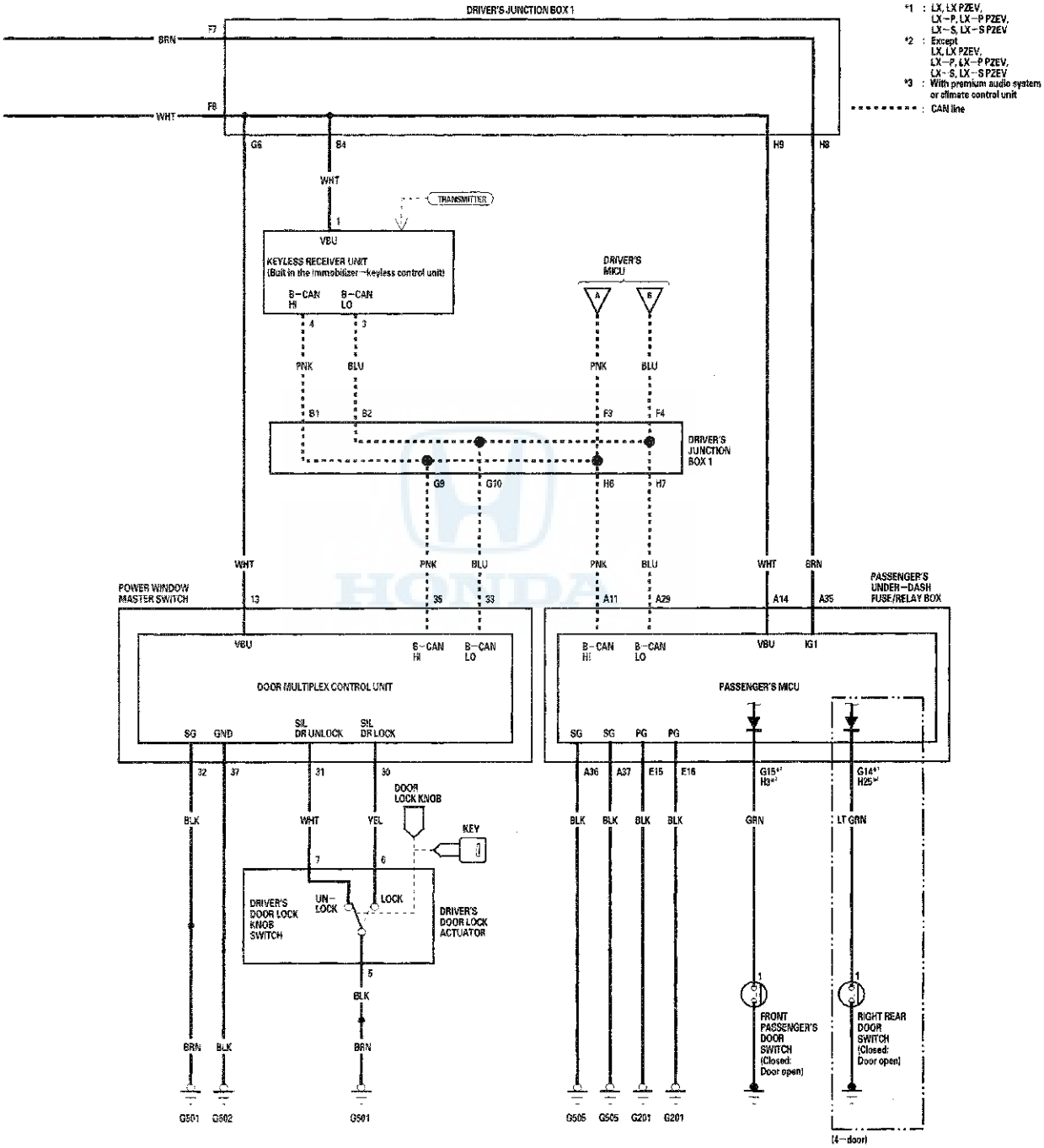
DRIVER'S JUNCTION BOX 1
*1 : LX, LX PZEV, LX-P, LX-P PZEV, LX-S, LX-S PZEV
*2 : Except LX, LX PZEV, LX-P, LX-P PZEV, LX-S, LX-S PZEV
*3 : With premium audio system or climate control unit
: CAN line
BRN
WHT
TRANSMITTER
VBU
KEYLESS RECEIVER UNIT (Built in the immobilizer -keyless control unit)
B-CAN HI
B-CAN LO
DRIVER'S MICU
PNK
BLU
DRIVER'S JUNCTION BOX 1
POWER WINDOW MASTER SWITCH
DOOR MULTIPLEX CONTROL UNIT
SG
GND
SIL DR UNLOCK
SIL DR LOCK
PASSENGER'S UNDER-DASH FUSE/RELAY BOX
PASSENGER'S MICU
PG
IG1
DOOR LOCK KNOB
KEY
DRIVER'S DOOR LOCK KNOB SWITCH
UN-LOCK
LOCK
DRIVER'S DOOR LOCK ACTUATOR
YEL
GRN
LT GRN
FRONT PASSENGER'S DOOR SWITCH (Closed: Door open)
RIGHT REAR DOOR SWITCH (Closed: Door open)
(4-door)
G501
G502
G505
G201

Control Unit Input Test

NOTE: Before testing, troubleshoot the multiplex integrated control unit first, using B-CAN System Diagnosis Test Mode A (see page 22-120).

Driver's MICU

1. Turn the ignition switch to LOCK (0), and remove the driver's dashboard lower cover (see page 20-153).
2. Disconnect driver's under-dash fuse/relay box connectors D, P, Q, and R.

   NOTE: All connector views are shown from wire side of female terminals.

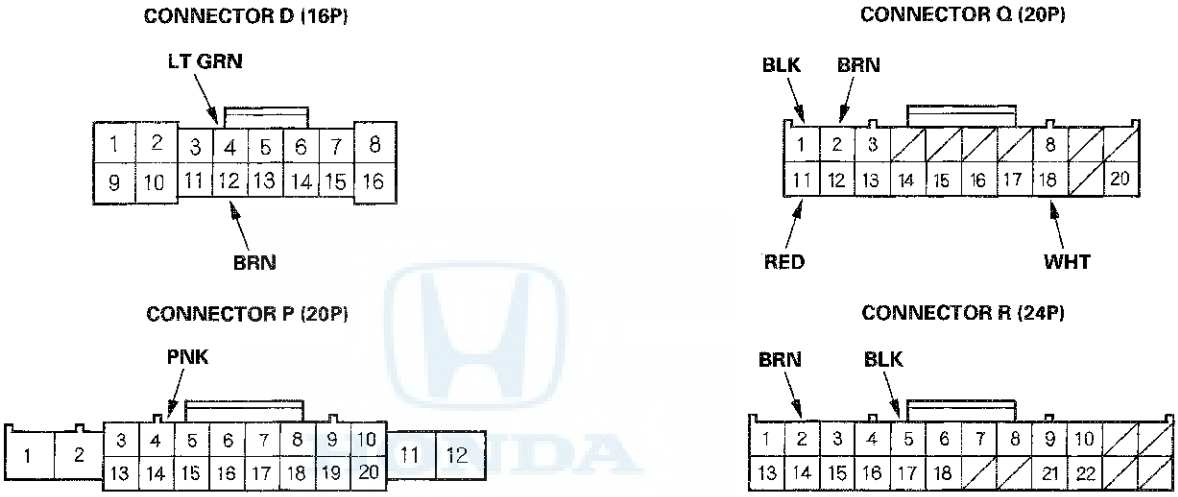

3. Inspect the connector and socket terminals to be sure they are all making good contact.
   - If the terminals are bent, loose or corroded, repair them as necessary and recheck the system.
   - If the terminals look OK, go to step 4.

4. Reconnect the connectors to the driver's under-dash fuse/relay box, and make these input tests at the connectors.

- If any test indicates a problem, find and correct the cause, then recheck the system.
- If all the input tests prove OK, go to step 5.

Cavity	Wire	Test condition	Test: Desired result	Possible cause if desired result is not obtained
Q1	BLK	Under all conditions	Measure the voltage to ground: There should be less than 0.5 V.	• Poor ground (G502) • An open in the wire
Q2	BRN	Under all conditions	Measure the voltage to ground: There should be less than 0.5 V.	• Poor ground (G501) • An open in the wire
R2	BRN	Under all conditions	Measure the voltage to ground: There should be less than 0.5 V.	• Poor ground (G501) • An open in the wire
R5	BLK	Under all conditions	Measure the voltage to ground: There should be less than 0.5 V.	• Poor ground (G502) • An open in the wire
D4	LT GRN	Left rear door open	Measure the voltage to ground: There should be less than 1 V.	• Faulty left rear door switch • An open in the wire
		Left rear door closed	Measure the voltage to ground: There should be more than 5 V.	• Faulty left rear door switch • A short to ground in the wire
D12	BRN	Driver's door open	Measure the voltage to ground: There should be less than 1 V.	• Faulty driver's door switch • An open in the wire
		Driver's door closed	Measure the voltage to ground: There should be more than 5 V.	• Faulty driver's door switch • A short to ground in the wire
P4	PNK	Ceiling light switch in the middle position, Interior light switch in the DOOR position, Map lights in the DOOR position	Attach to ground: The ceiling light and map light* should come on.	• Blown No. 16 (7.5 A) fuse in the under-hood fuse/relay box • Faulty ceiling light • Faulty map light* • Faulty interior light switch* • Blown bulb • An open in the wire
Q11	RED	Under all conditions	Attach to ground: The ignition key light should come on.	• Blown No. 16 (7.5 A) fuse in the under-hood fuse/relay box • Faulty ignition key light • An open in the wire
Q18	WHT	Ignition key inserted into the ignition switch	Measure the voltage to ground: There should be less than 1 V.	• Faulty ignition key switch • An open in the wire • Poor ground (G503)
		Ignition switch LOCK (0), and the ignition key removed from the ignition switch	Measure the voltage to ground: There should be more than 5 V.	• Faulty ignition key switch • A short to ground in the wire

*: With moonroof

(cont'd)

Control Unit Input Test (cont'd)

Passenger's MICU

5. Turn the ignition switch to LOCK (0), and remove the right kick panel.

   - 2-door (see page 20-97)
   - 4-door (see page 20-99)

6. Disconnect passenger's under-dash fuse/relay box connectors A, E, and G*1 (or H*2).
   * 1: LX, LX PZEV, LX-P, LX-P PZEV, LX-S, LX-S PZEV
   * 2: Except LX, LX PZEV, LX-P, LX-P PZEV, LX-S, LX-S PZEV

   NOTE: All connector views are wire side of female terminals.

CONNECTOR A (38P)

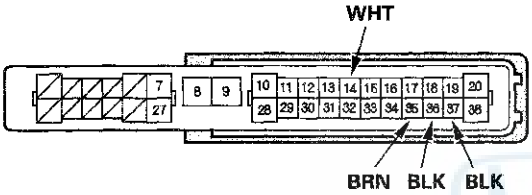

CONNECTOR G (16P) (LX, LX PZEV, LX-P, LX-P PZEV, LX-S, LX-S PZEV)

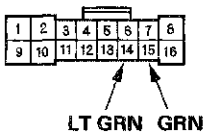

CONNECTOR E (18P)

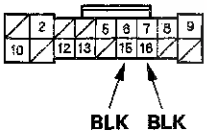

CONNECTOR H (38P) (Except LX, LX PZEV, LX-P, LX-P PZEV, LX-S, LX-S PZEV)

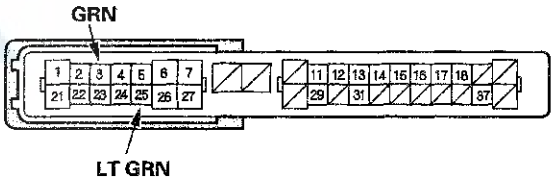

7. Inspect the connector and socket terminals to be sure they are all making good contact.

   - If the terminals are bent, loose or corroded, repair them as necessary and recheck the system.
   - If the terminals look OK, go to step 8.

8. Reconnect the connectors to the passenger's under-dash fuse/relay box, and make these input tests at the connectors.

- If any test indicates a problem, find and correct the cause, then recheck the system.
- If all the input tests prove OK, go to step 9.

Cavity	Wire	Test condition	Test: Desired result	Possible cause if desired result is not obtained
A36	BLK	Under all conditions	Measure the voltage to ground: There should be less than 0.5 V.	• Poor ground (G505) • An open in the wire
A37	BLK	Under all conditions	Measure the voltage to ground: There should be less than 0.5 V.	• Poor ground (G505) • An open in the wire
E15	BLK	Under all conditions	Measure the voltage to ground: There should be less than 0.5 V.	• Poor ground (G201) • An open in the wire
E16	BLK	Under all conditions	Measure the voltage to ground: There should be less than 0.5 V.	• Poor ground (G201) • An open in the wire
A14	WHT	Under all conditions	Measure the voltage to ground: There should be battery voltage.	• Blown No. 15 (10 A) fuse in the under-hood fuse/relay box • Faulty driver's under-dash fuse/relay box • An open in the wire
A35	BRN	Ignition switch ON (II)	Measure the voltage to ground: There should be battery voltage.	• Blown No. 5 (7.5 A) fuse in the driver's under-dash fuse/relay box • Faulty driver's under-dash fuse/relay box • An open in the wire
G14*1 or H25*2	LT GRN	Right rear door open	Measure the voltage to ground: There should be less than 1 V.	• Faulty right rear door switch • An open in the wire
		Right rear door closed	Measure the voltage to ground: There should be more than 5 V.	• Faulty right rear door switch • A short to ground in the wire
G15*1 or H3*2	GRN	Front passenger's door open	Measure the voltage to ground: There should be less than 1 V.	• Faulty front passenger's door switch • An open in the wire
		Front passenger's door closed	Measure the voltage to ground: There should be more than 5 V.	• Faulty front passenger's door switch • A short to ground in the wire

* 1: LX, LX PZEV, LX-P, LX-P PZEV, LX-S, LX-S PZEV
* 2: Except LX, LX PZEV, LX-P, LX-P PZEV, LX-S, LX-S PZEV

(cont'd)

Control Unit Input Test (cont'd)

Door Multiplex Control Unit

9. Turn the ignition switch to LOCK (0), and remove the power window master switch (see page 22-275).

10. Disconnect the 37P connector from the door multiplex control unit.

DOOR MULTIPLEX CONTROL UNIT 37P CONNECTOR

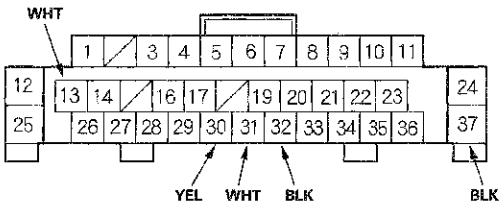

Wire side of female terminals

11. Inspect the connector and socket terminals to be sure they are all making good contact.
    - If the terminals are bent, loose or corroded, repair them as necessary and recheck the system.
    - If the terminals look OK, go to step 12.

12. Reconnect the 37P connector to the door multiplex control unit, and make these input tests at the connector.
    - If any test indicates a problem, find and correct the cause, then recheck the system.
    - If all the input tests prove OK, go to step 13.

Cavity	Wire	Test condition	Test: Desired result	Possible cause if desired result is not obtained
32	BLK	Under all conditions	Measure the voltage to ground: There should be less than 0.5 V.	• Poor ground (G501) • An open in the wire
37	BLK	Under all conditions	Measure the voltage to ground: There should be less than 0.5 V.	• Poor ground (G502) • An open in the wire
13	WHT	Under all conditions	Measure the voltage to ground: There should be battery voltage.	• Blown No. 15 (10 A) fuse in the under-hood fuse/relay box • Faulty driver's under-dash fuse/relay box • An open in the wire
30	YEL	Driver's door lock knob switch in LOCK	Measure the voltage to ground: There should be less than 1 V.	• Poor ground (G501) • Faulty driver's door lock knob switch • An open in the wire
		Driver's door lock knob switch in neutral or UNLOCK	Measure the voltage to ground: There should be battery voltage.	• Faulty driver's door lock knob switch • A short to ground in the wire
31	WHT	Driver's door lock knob switch in UNLOCK	Measure the voltage to ground: There should be less than 1 V.	• Poor ground (G501) • Faulty driver's door lock knob switch • An open in the wire
		Driver's door lock knob switch in neutral or LOCK	Measure the voltage to ground: There should be battery voltage.	• Faulty driver's door lock knob switch • A short to ground in the wire

13. If multiple failures are found on more than one control unit, replace the driver's under-dash fuse/relay box (includes the driver's MICU) (see page 22-84). If input failures are related to a particular control unit, replace the control unit.

Ignition Key Switch Test

1. Remove the steering column upper and lower covers (see page 20-168).

2. Disconnect the 6P connector (A).

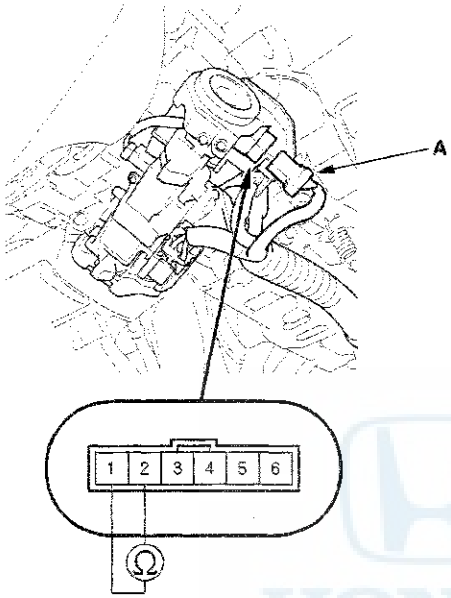

3. Check for continuity between the No. 1 and No. 2 terminals.

   - There should be continuity with the key in the ignition switch.
   - There should be no continuity with the key removed.

4. If the continuity is not as specified, replace the ignition switch.

Ignition Key Light Test

1. Remove the steering column upper and lower covers (see page 20-168).

2. Disconnect the 6P connector (A).

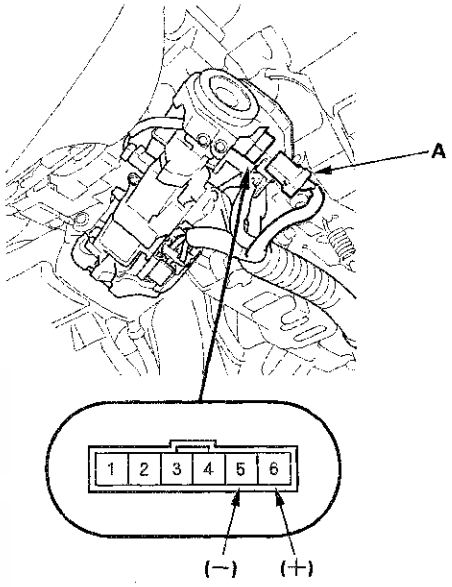

3. The LED should come on when power is connected to the terminal No. 6 and ground is connected to terminal No. 5.

4. If the LED does not come on, replace the ignition switch.

Component Location Index

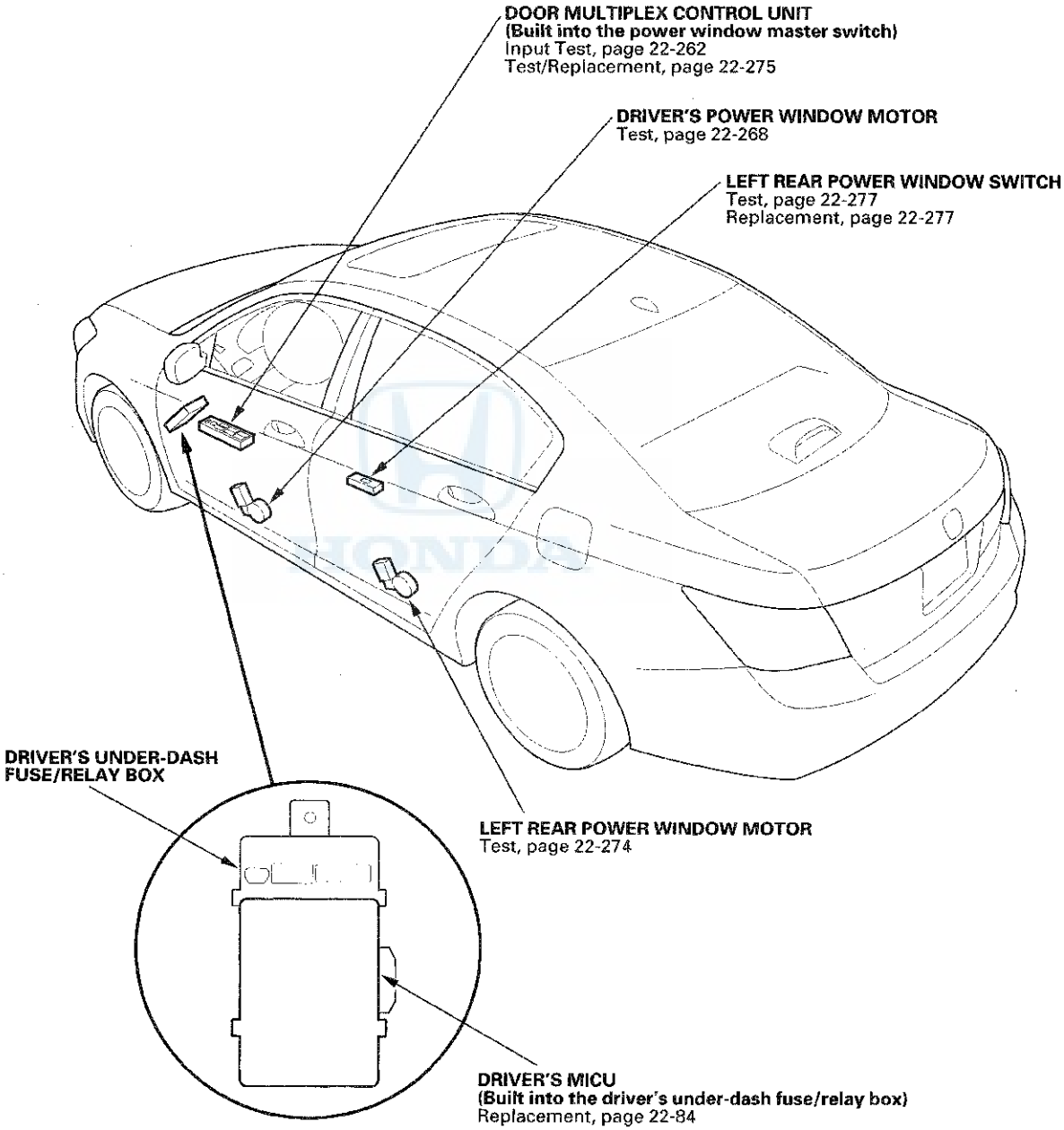

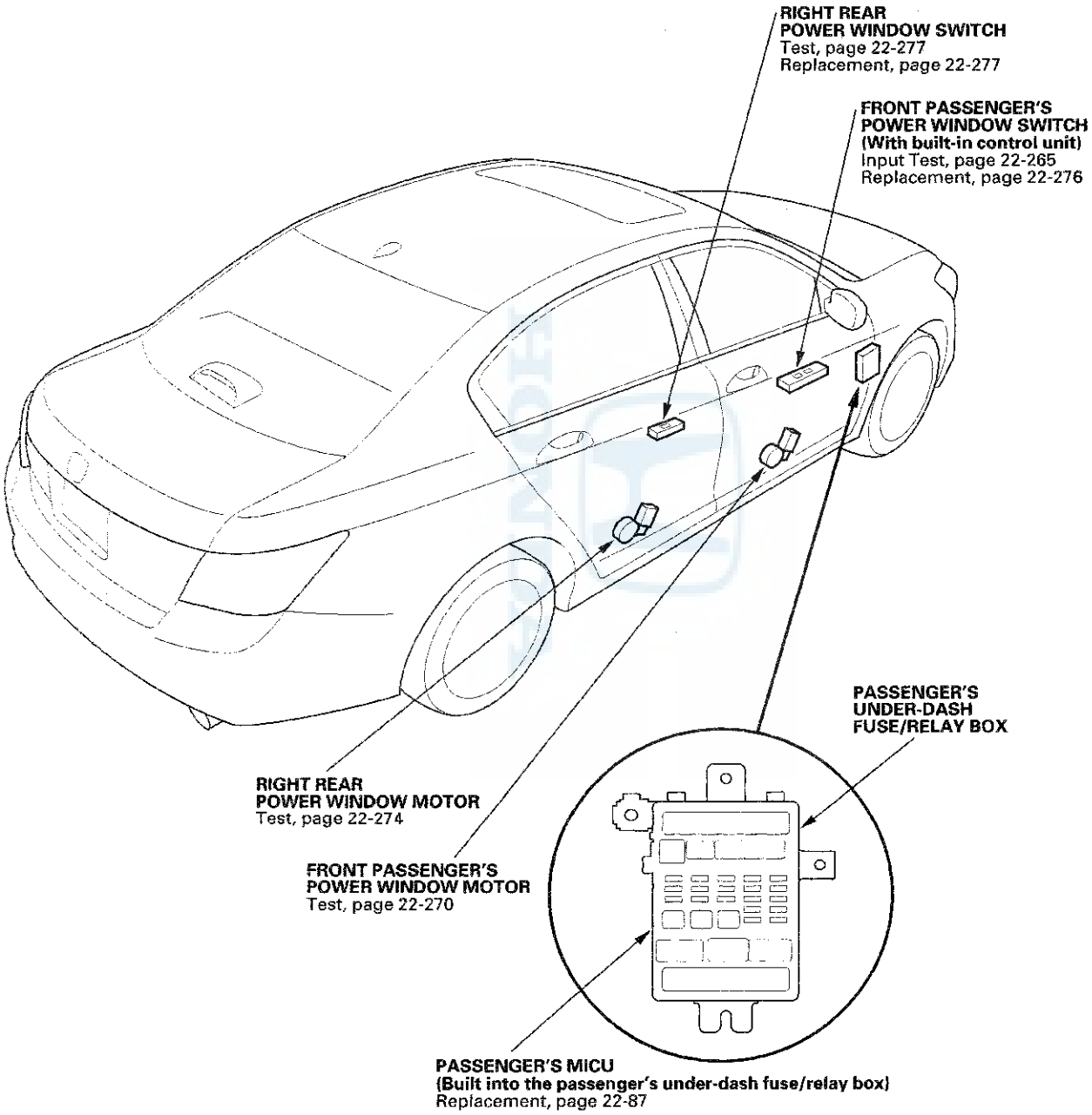
RIGHT REAR
POWER WINDOW SWITCH
Test, page 22-277
Replacement, page 22-277
FRONT PASSENGER'S
POWER WINDOW SWITCH
(With built-in control unit)
Input Test, page 22-265
Replacement, page 22-276
PASSENGER'S
UNDER-DASH
FUSE/RELAY BOX
RIGHT REAR
POWER WINDOW MOTOR
Test, page 22-274
FRONT PASSENGER'S
POWER WINDOW MOTOR
Test, page 22-270
PASSENGER'S MICU
(Built into the passenger's under-dash fuse/relay box)
Replacement, page 22-87

Power Windows

System Description

Anti-pinch Power Window Operation

The system is composed of the driver's MICU, passenger's MICU, door multiplex control unit (built into the power window master switch), front passenger's power window control unit (built into the front passenger's power window switch) * , and power window motors.
* : Except LX, LX PZEV, LX-P, LX-P PZEV, LX-S, LX-S PZEV

The driver's and front passenger's power window motors incorporate a hall IC unit (pulser) which generates pulses during the motor's operation and sends pulses to the driver's and passenger's power window control units. As soon as the power window control units detect a change in the pulse frequency from the hall IC unit (pulser), the power window control units make the power window motor stop and reverse. This prevents pinching your hand or fingers during auto-up operation.

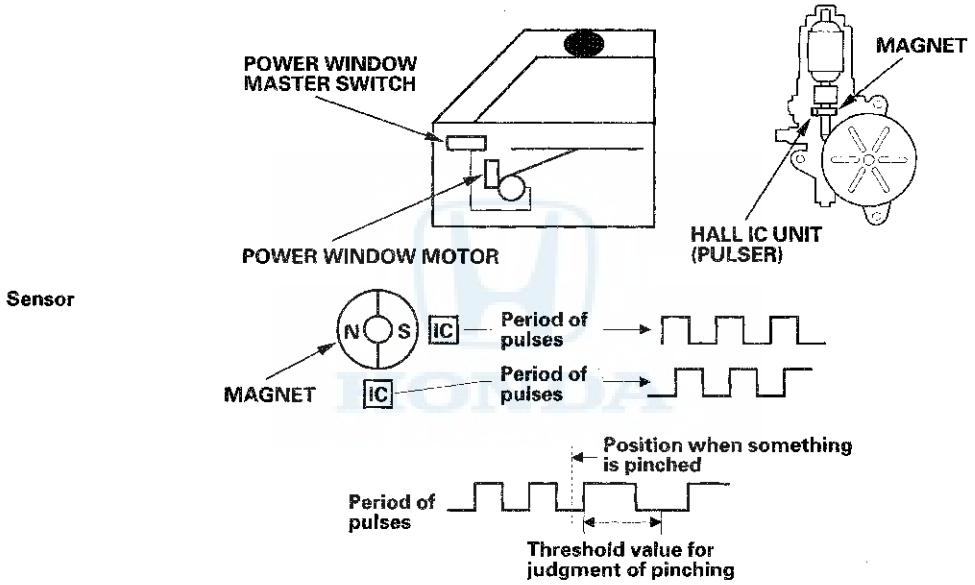

Key Cylinder Operation
With the key inserted in the driver's door key cylinder, turn the key a second time within 15 seconds and hold it to operate the windows and moonroof (clockwise to open, counterclockwise to close). The windows and moonroof stop moving when the key is released. The anti-pinch operation is not active when closing the windows and moonroof with the key cylinder.

Keyless Operation
By pressing and holding the UNLOCK button of the keyless transmitter a second time within 15 seconds, the windows and moonroof open. The windows and moonroof stop moving when the UNLOCK button is released. The windows do not close with the LOCK button.

Resetting the Power Window Control Unit

Resetting the power windows are required when any of the following have occurred:

- Power window regulator replacement, removal/installation, or repair
- Power window motor replacement, removal/installation, or repair
- Window run channel replacement or removal/installation
- Front passenger's power window switch replacement or removal/installation*
- Door glass replacement, removal/installation, or repair
- Power is removed from the driver's power window master switch or front passenger's power window switch while the power window timer is ON.

*: With front passenger's power window AUTO UP/AUTO DOWN function

NOTE: If the front passenger's power window has lost power when the key off timer is ON, it cannot be operated from the driver's switch and must be reset from the front passenger's power window switch.

Using the HDS

1. Connect the HDS to the data link connector.
2. Turn the ignition switch to ON (II), then enter the vehicle's VIN and mileage at the prompts.
3. Select BODY ELECTRICAL from the SYSTEM SELECT menu.
4. From the BODY ELECTRICAL SYSTEM SELECT menu, select POWER WINDOWS.
5. From the MODE menu, select ADJUSTMENTS.
6. From the ADJUSTMENT menu, select WINDOW RESET for driver's side (passenger's side) window.
7. Follow the prompts on the screen.
8. Confirm that the power window control unit is reset by using the power window AUTO UP and AUTO DOWN function.

Without the HDS

NOTE:

- To start the reset procedure, do the driver's power window master switch first (steps 1-8), then do the passenger's power window switch (steps 9-11), if equipped.
- Do each bullet in step 4 within 5 seconds of each other.

Driver's Power Window

1. Turn the ignition switch to ON (II).
2. Move the driver's power window all the way down by using the driver's power window DOWN switch.
3. Open the driver's door.
4. Do the following three times before going to step 5:
   - Turn the ignition switch to LOCK (0).
   - Push and hold the driver's power window DOWN switch.
   - Turn the ignition switch ON (II).
   - Release the driver's power window DOWN switch.
5. Confirm that AUTO UP no longer works. If AUTO UP still works, go back to step 1.
6. Move the driver's power window all the way down using the driver's power window DOWN switch.
7. Pull up and hold the driver's power window UP switch until the driver's power window is all the way up, then continue to hold the switch for 1 second.
8. Confirm that the power window control unit is reset by using the driver's power window AUTO UP and AUTO DOWN function.
   - If the power window still does not work in AUTO, repeat the procedure several times, paying close attention to the 5 second time limit between steps.
   - If it still does not work, go to B-CAN System Diagnosis Test Mode A (see page 22-120).

Front Passenger's Power Window (if equipped)

9. Move the front passenger's window all the way down using the front passenger's power window DOWN switch.
10. Pull up and hold the front passenger's power window UP switch until the front passenger's power window is all the way up, then continue to hold the switch for 1 second.
11. Confirm that the power window control unit is reset by using the front passenger's power window AUTO UP and DOWN function.

Power Windows

Circuit Diagram

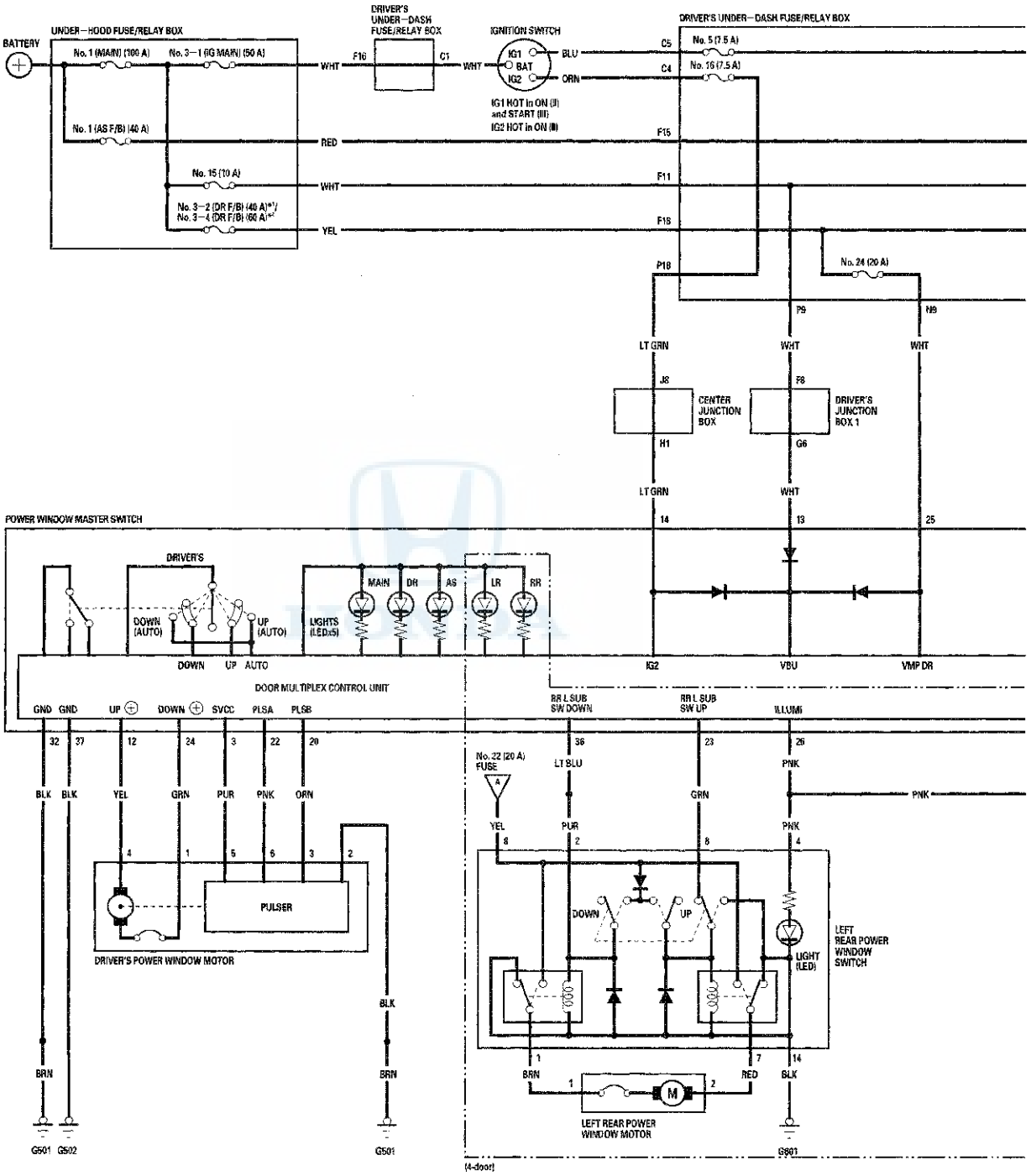

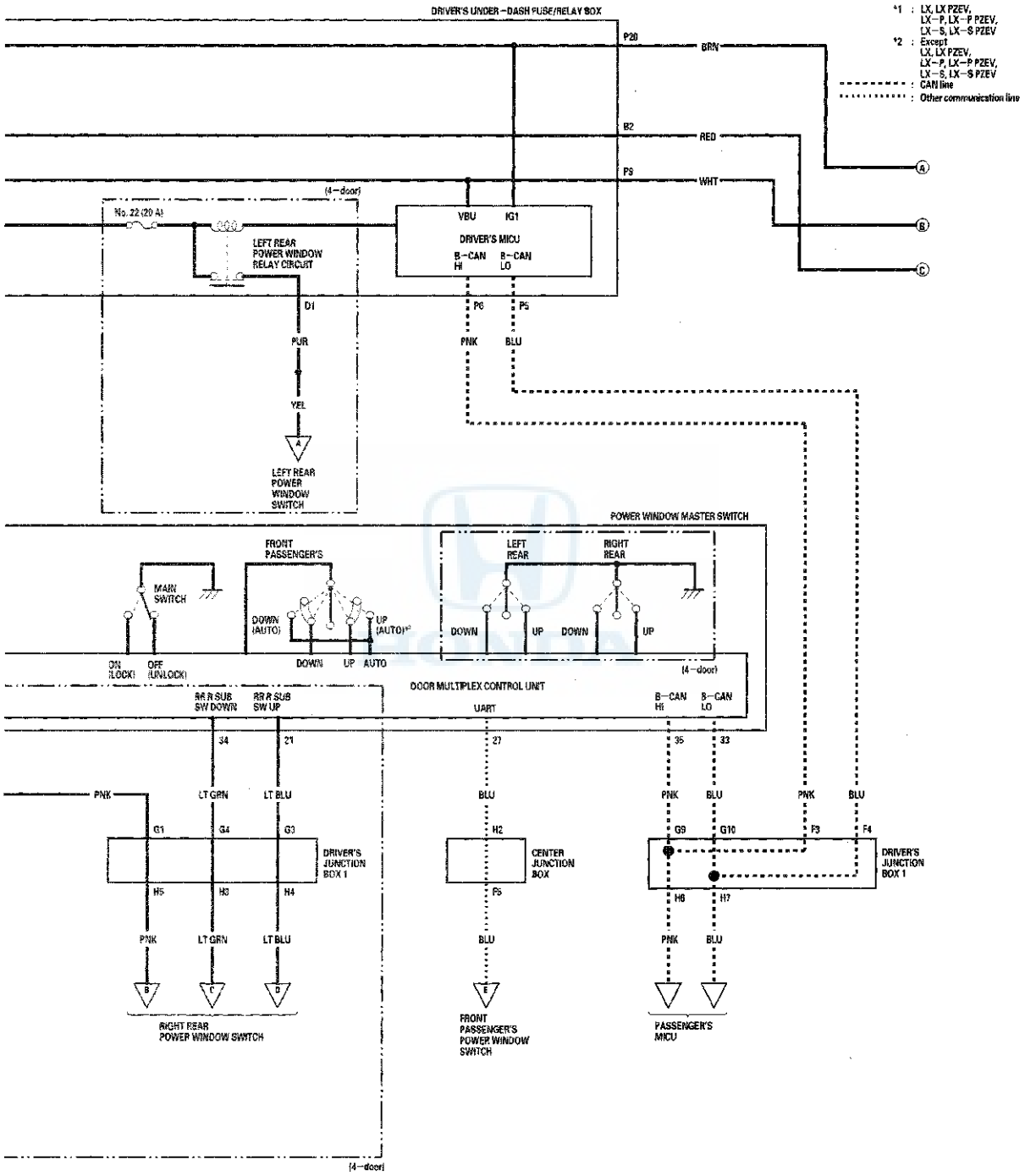
DRIVER'S UNDER-DASH FUSE/RELAY BOX
*1 : LX, LX PZEV, LX-P, LX-P PZEV, LX-S, LX-S PZEV
*2 : Except LX, LX PZEV, LX-P, LX-P PZEV, LX-S, LX-S PZEV
CAN line
Other communication line
P28
BRN
B2
RED
P9
WHT
(4-door)
No. 22 (20 A)
LEFT REAR POWER WINDOW RELAY CIRCUIT
VBU
IG1
DRIVER'S MICU
B-CAN HI
B-CAN LO
D1
PUR
YEL
LEFT REAR POWER WINDOW SWITCH
P6
P5
PNK
BLU
POWER WINDOW MASTER SWITCH
FRONT PASSENGER'S
LEFT REAR
RIGHT REAR
MAIN SWITCH
DOWN (AUTO)
UP (AUTO)*
DOWN
UP
DOWN
UP
ON (LOCK)
OFF (UNLOCK)
DOWN
UP
AUTO
(4-door)
DOOR MULTIPLEX CONTROL UNIT
RR R SUB SW DOWN
RR R SUB SW UP
UART
B-CAN HI
B-CAN LO
34
21
27
35
33
PNK
LT GRN
LT BLU
BLU
PNK
BLU
PNK
BLU
G1
G4
G3
H2
G9
G10
F3
F4
DRIVER'S JUNCTION BOX 1
CENTER JUNCTION BOX
DRIVER'S JUNCTION BOX 1
H5
H3
H4
F5
H6
H7
PNK
LT GRN
LT BLU
BLU
PNK
BLU
B
C
D
E
RIGHT REAR POWER WINDOW SWITCH
FRONT PASSENGER'S POWER WINDOW SWITCH
PASSENGER'S MICU
(4-door)

(cont'd)

nt'd)

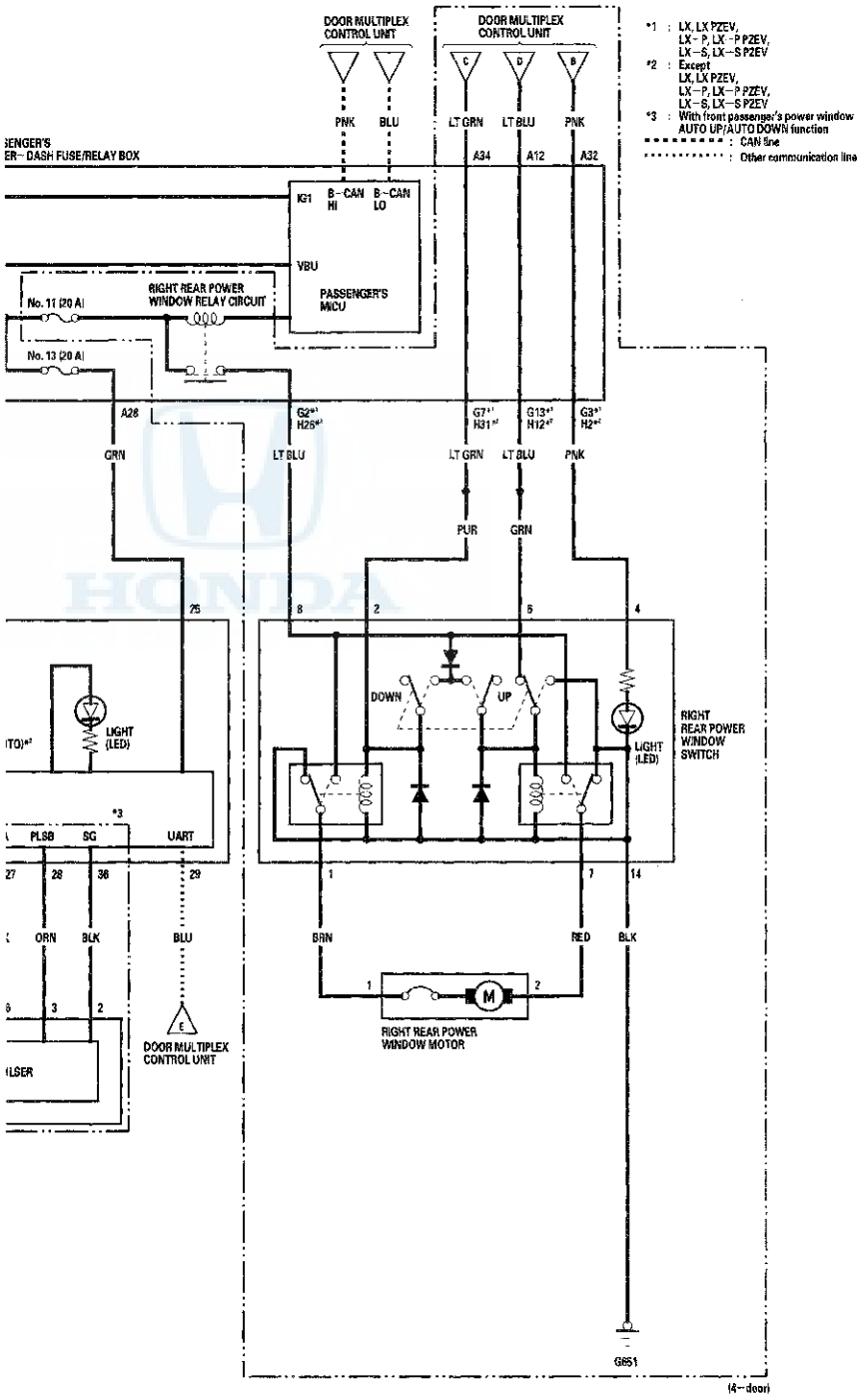
DOOR MULTIPLEX CONTROL UNIT
DOOR MULTIPLEX CONTROL UNIT
*1 : LX, LX PZEV, LX-P, LX-P PZEV, LX-S, LX-S PZEV
*2 : Except LX, LX PZEV, LX-P, LX-P PZEV, LX-S, LX-S PZEV
*3 : With front passenger's power window AUTO UP/AUTO DOWN function
: CAN line
: Other communication line
PNK
BLU
LT GRN
LT BLU
PNK
A34
A12
A32
B-CAN HI
B-CAN LO
VBU
PASSENGER'S MICU
RIGHT REAR POWER WINDOW RELAY CIRCUIT
No. 11 (20 A)
No. 13 (20 A)
A28
GRN
LT BLU
LT GRN
LT BLU
PNK
PUR
GRN
LIGHT (LED)
DOWN
UP
RIGHT REAR POWER WINDOW SWITCH
LIGHT (LED)
PLSB
SG
UART
ORN
BLK
BLU
BRN
RED
BLK
RIGHT REAR POWER WINDOW MOTOR
DOOR MULTIPLEX CONTROL UNIT
G651
(4-door)

DTC Troubleshooting

DTC B1125: Driver's Power Window Motor Pulse A Error

DTC B1126: Driver's Power Window Motor Pulse B Error

NOTE: If you are troubleshooting multiple DTCs, be sure to follow the instructions in B-CAN System Diagnosis Test Mode A (see page 22-120).

1. Clear the DTCs with the HDS.

2. Turn the ignition switch to LOCK (0) and then back to ON (II).

3. Open and close the driver's power window by using the power window master switch manually.

   Does the window motor operate?

   YES—Go to step 4.

   NO—Test the driver's power window motor (see page 22-268).■

4. Check for DTCs with the HDS.

   Are DTC B1125 and/or B1126 indicated?

   YES—Go to step 5.

   NO—Intermittent failure, the system is OK at this time. Check for loose or poor connections.■

5. Select the POWER WINDOWS from the BODY ELECTRICAL system select menu, and enter the DATA LIST.

6. Check the DETECT/NONE information of the driver's window motor A-phase and B-phase signal in the DATA LIST.

   Does the information indicator display DETECT while the window is moving, and display NONE when the window is stopped?

   YES—Replace the power window master switch.■

   NO—Go to step 7.

7. Turn the ignition switch to LOCK (0).

8. Disconnect the door multiplex control unit 37P connector.

9. Disconnect the driver's power window motor 6P connector.

10. Check for continuity between the door multiplex control unit 37P connector terminals and driver's power window motor 6P connector terminals as shown:

Door multiplex control unit 37P connector	Driver's power window motor 6P connector
3	5
20	3
22	6

DOOR MULTIPLEX CONTROL UNIT 37P CONNECTOR
Wire side of female terminals

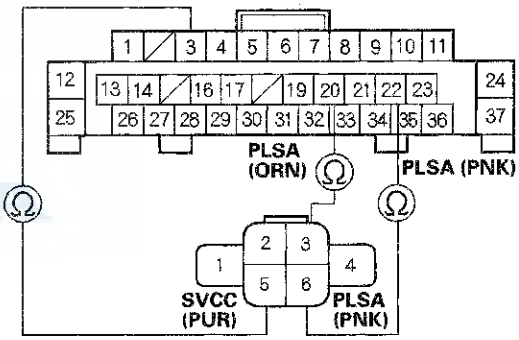

DRIVER'S POWER WINDOW MOTOR 6P CONNECTOR
Wire side of female terminals

Is there continuity?

YES—Go to step 11.

NO—Repair an open in the wire between the door multiplex control unit and the driver's power window motor.■

(cont'd)

DTC Troubleshooting (cont'd)

11. Check for continuity between the terminals No. 3, No. 5, and No. 6 of the driver's power window motor 6P connector and body ground.

DRIVER'S POWER WINDOW MOTOR 6P CONNECTOR

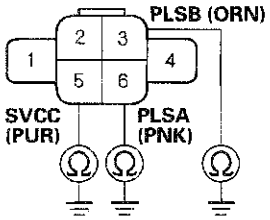

Wire side of female terminals

Is there continuity?

YES—Repair a short to ground in the wire.■

NO—Go to step 12.

12. Test the driver's power window motor (see page 22-268).

Is the motor OK?

YES—Replace the power window master switch.■

NO—Replace the driver's power window motor.■

DTC B1130: Front Passenger's Power Window Motor Pulse A Error

DTC B1131: Front Passenger's Power Window Motor Pulse B Error

NOTE: If you are troubleshooting multiple DTCs, be sure to follow the instructions in B-CAN System Diagnosis Test Mode A (see page 22-120).

1. Clear the DTCs with the HDS.

2. Turn the ignition switch to LOCK (0) and then back to ON (II).

3. Open and close the front passenger's power window by using the front passenger's power window switch manually.

   Does the window motor operate?

   YES—Go to step 4.

   NO—Test the front passenger's power window motor (see page 22-270).■

4. Check for DTCs with the HDS.

   Are DTC B1130 and/or B1131 indicated?

   YES—Go to step 5.

   NO—Intermittent failure, the system is OK at this time. Check for loose or poor connections.■

5. Select the POWER WINDOWS from the BODY ELECTRICAL system select menu, and enter the DATA LIST.

6. Check the DETECT/NONE information of the front passenger's window motor A-phase and B-phase signal in the DATA LIST.

   Does the information indicator display DETECT while the windows is moving, and display NONE when the window is stopped?

   YES—Replace the front passenger's power window switch.■

   NO—Go to step 7.

7. Turn the ignition switch to LOCK (0).

8. Disconnect the front passenger's power window switch 37P connector.

9. Disconnect the front passenger's power window motor 6P connector.

10. Check for continuity between the front passenger's power window switch 37P connector terminals and front passenger's power window motor 6P connector terminals as shown:

Front passenger's power window 37P connector	Front passenger's power window motor 6P connector
26	5
27	6
28	3

FRONT PASSENGER'S POWER WINDOW SWITCH 37P CONNECTOR
Wire side of female terminals

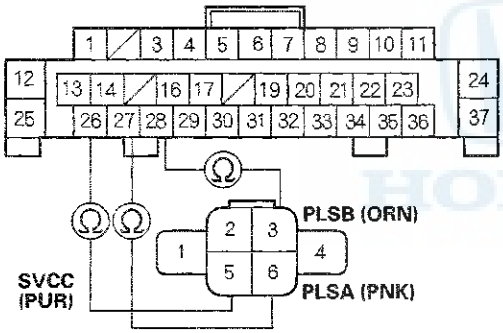

FRONT PASSENGER'S POWER WINDOW MOTOR 6P CONNECTOR
Wire side of female terminals

Is there continuity?

YES—Go to step 11.

NO—Repair an open in the wire between the front passenger's power window switch and the front passenger's power window motor. ■

11. Check for continuity between the terminal No. 3, No. 5, and No.6 of the front passenger's power window motor 6P connector and body ground.

FRONT PASSENGER'S POWER WINDOW MOTOR 6P CONNECTOR

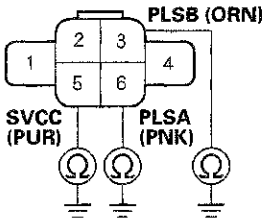

Wire side of female terminals

Is there continuity?

YES—Repair a short to ground in the wire. ■

NO—Go to step 12.

12. Test the front passenger's power window motor (see page 22-270).

Is the motor OK?

YES—Replace the front passenger's power window switch. ■

NO—Replace the front passenger's power window motor. ■

DTC Troubleshooting (cont'd)

DTC B1140: Driver's Power Window Position Detect Circuit Malfunction

NOTE: If you are troubleshooting multiple DTCs, be sure to follow the instructions in B-CAN System Diagnosis Test Mode A (see page 22-120).

1. Clear the DTCs with the HDS.
2. Turn the ignition switch OFF, and then back ON (II).
3. Open and close the driver's power window by using the driver's switch manually.
4. Check for DTCs with the HDS.

   Are DTCs B1125 or B1126 indicated?

   YES—Troubleshoot the DTC B1125 or B1126 (see page 22-255). ■

   NO—Go to step 5.
5. Reset the power window control unit (see page 22-251).
6. Check for DTCs again with the HDS.

   Is DTC B1140 indicated?

   YES—Go to step 7.

   NO—The system is recovered at this time. ■
7. Substitute a known-good power window master switch.
8. Open and close the driver's power window by using the driver's switch manually.
9. Check for DTCs with the HDS.

   Is DTC B1140 indicated?

   YES—Faulty driver's power window motor; replace it. ■

   NO—Faulty door multiplex control unit; replace the power window master switch. ■

DTC B1142: Communication Line (UART Line) Communication Error

NOTE: If you are troubleshooting multiple DTCs, be sure to follow the instructions in B-CAN System Diagnosis Test Mode A (see page 22-120).

1. Clear the DTCs with the HDS.
2. Turn the ignition switch to LOCK (0) and then back to ON (II).
3. Open and close the driver's and front passenger's windows by operating the power window master switch.
4. Check for DTCs with the HDS.

   Is DTC B1142 indicated?

   YES—Go to step 5.

   NO—Intermittent failure, the system is OK at this time. ■
5. Turn the ignition switch to LOCK (0).
6. Disconnect the door multiplex control unit 37P connector.
7. Disconnect the front passenger's power window switch 37P connector.
8. Check for continuity between the door multiplex control unit 37P connector terminal No. 27 and body ground.

DOOR MULTIPLEX CONTROL UNIT 37P CONNECTOR

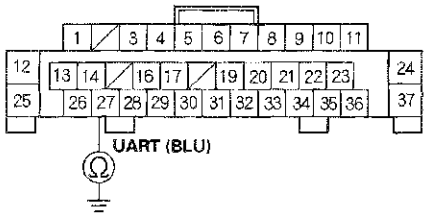

Wire side of female terminals

Is there continuity?

YES—Repair a short to ground in the wire. ■

NO—Go to step 9.

9. Check for continuity between the door multiplex control unit 37P connector terminal No. 27 and the front passenger's power window switch 37P connector terminal No. 29.

DOOR MULTIPLEX CONTROL UNIT 37P CONNECTOR
Wire side of female terminals

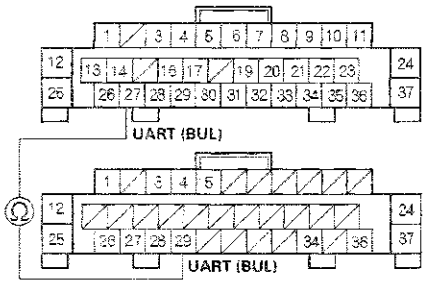

FRONT PASSENGER'S POWER WINDOW SWITCH 37P CONNECTOR
Wire side of female terminals

Is there continuity?

YES—Go to step 10.

NO—Repair an open in the wire. ■

10. Turn the ignition switch to ON (II).

11. Measure the voltage between the door multiplex control unit 37P connector terminal No. 27 and body ground.

DOOR MULTIPLEX CONTROL UNIT 37P CONNECTOR

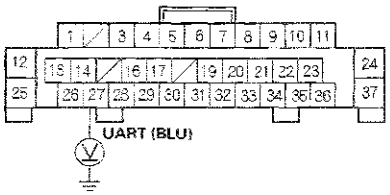

Wire side of female terminals

Is there less than 1 V?

YES—Go to the passenger's power window switch input test, and do all the power and ground input tests (see page 22-265). If the tests prove OK, substitute a known good passenger's power window switch. If the DTC goes away, replace the original passenger's power window switch. If the DTC is still present, replace the power window master switch. ■

NO—Repair a short to power in the wire. ■

DTC B1145: Front Passenger's Power Window Position Detect Circuit Error

NOTE: If you are troubleshooting multiple DTCs, be sure to follow the instructions in B-CAN System Diagnosis Test Mode A (see page 22-120).

1. Clear the DTC with the HDS.

2. Turn the ignition switch OFF, and then back ON (II).

3. Open and close the front passenger's power window by using the front passenger's switch manually.

4. Check for DTCs with the HDS.

Are DTCs B1130 or B1131 indicated?

YES—Troubleshoot the DTC B1130 or B1131 (see page 22-256). ■

NO—Go to step 5.

5. Reset the power window control unit and the front passenger's power window control unit (see page 22-251).

6. Check for DTCs again with the HDS.

Is DTC B1145 indicated?

YES—Go to step 7.

NO—The system is recovered at this time. ■

7. Substitute a known-good passenger's power window switch.

8. Open and close the front passenger's power window by using the front passenger's switch manually.

9. Check for DTCs with the HDS.

Is DTC B1145 indicated?

YES—Faulty front passenger's window motor; replace it. ■

NO—Faulty front passenger's power window switch; replace the front passenger's power window switch. ■

DTC Troubleshooting (cont'd)

DTC U0155: Door Multiplex Control Unit Lost Communication with Gauge Control Module

NOTE: If you are troubleshooting multiple DTCs, be sure to follow the instructions in B-CAN System Diagnosis Test Mode A (see page 22-120).

1. Clear the DTCs with the HDS.
2. Turn the ignition switch to LOCK (0) and then back to ON (II).
3. Wait for 6 seconds or more.
4. Check for DTCs with the HDS.

   Is DTC U0155 indicated?

   YES—Go to the gauge control module input test, and do all power, ground and communication input tests (see page 22-320). If the tests prove OK, replace the gauge control module.■

   NO—Intermittent failure, the system is OK at this time. Check for loose or poor connections at the gauge control module and the related units.■

DTC U0164: Door Multiplex Control Unit Lost Communication with Climate Control Unit

NOTE: If you are troubleshooting multiple DTCs, be sure to follow the instructions in B-CAN System Diagnosis Test Mode A (see page 22-120).

1. Clear the DTCs with the HDS.
2. Turn the ignition switch to LOCK (0) and then back to ON (II).
3. Wait for 6 seconds or more.
4. Check for DTCs with the HDS.

   Is DTC U0164 indicated?

   YES—Go to the door multiplex control unit input test and check the power and grounds. If OK, replace the driver's power window master switch.■

   NO—Intermittent failure, the system is OK at this time. Check for loose or poor connections between the door multiplex control unit and climate control unit.■

DTC U1282: Door Multiplex Control Unit Lost Communication with Driver's MICU

NOTE: If you are troubleshooting multiple DTCs, be sure to follow the instructions in B-CAN System Diagnosis Test Mode A (see page 22-120).

1. Clear the DTCs with the HDS.
2. Turn the ignition switch to LOCK (0) and then back to ON (II).
3. Wait for 6 seconds or more.
4. Check for DTCs with the HDS.

   Is DTC U1282 indicated?

   YES—Go to the driver's MICU input test, and do all power, ground and communication input tests (see page 22-138). If the tests prove OK, replace the driver's under-dash fuse/relay box.■

   NO—Intermittent failure, the system is OK at this time. Check for loose or poor connections at driver's under-dash fuse/relay box connector P (20P) and the related units.■

DTC U1283: Door Multiplex Control Unit Lost Communication with Passenger's MICU

NOTE: If you are troubleshooting multiple DTCs, be sure to follow the instructions in B-CAN System Diagnosis Test Mode A (see page 22-120).

1. Clear the DTCs with the HDS.
2. Turn the ignition switch to LOCK (0) and then back to ON (II).
3. Wait for 6 seconds or more.
4. Check for DTCs with the HDS.

   Is DTC U1283 indicated?

   YES—Go to the passenger's MICU input test, and do all power, ground and communication input tests (see page 22-142). If the tests prove OK, replace the passenger's under-dash fuse/relay box.■

   NO—Intermittent failure, the system is OK at this time. Check for loose or poor connections at passenger's under-dash fuse/relay box connector A (38P) and the related units.■

Power Window Master Switch Input Test

NOTE: Before testing, troubleshoot the multiplex integrated control unit first, using B-CAN System Diagnosis Test Mode A (see page 22-120).

1. Turn the ignition switch to LOCK (0), open and close the driver's door, then remove the power window master switch (see page 22-275).

2. Disconnect the 37P connector (A) from the door power window master switch (B).

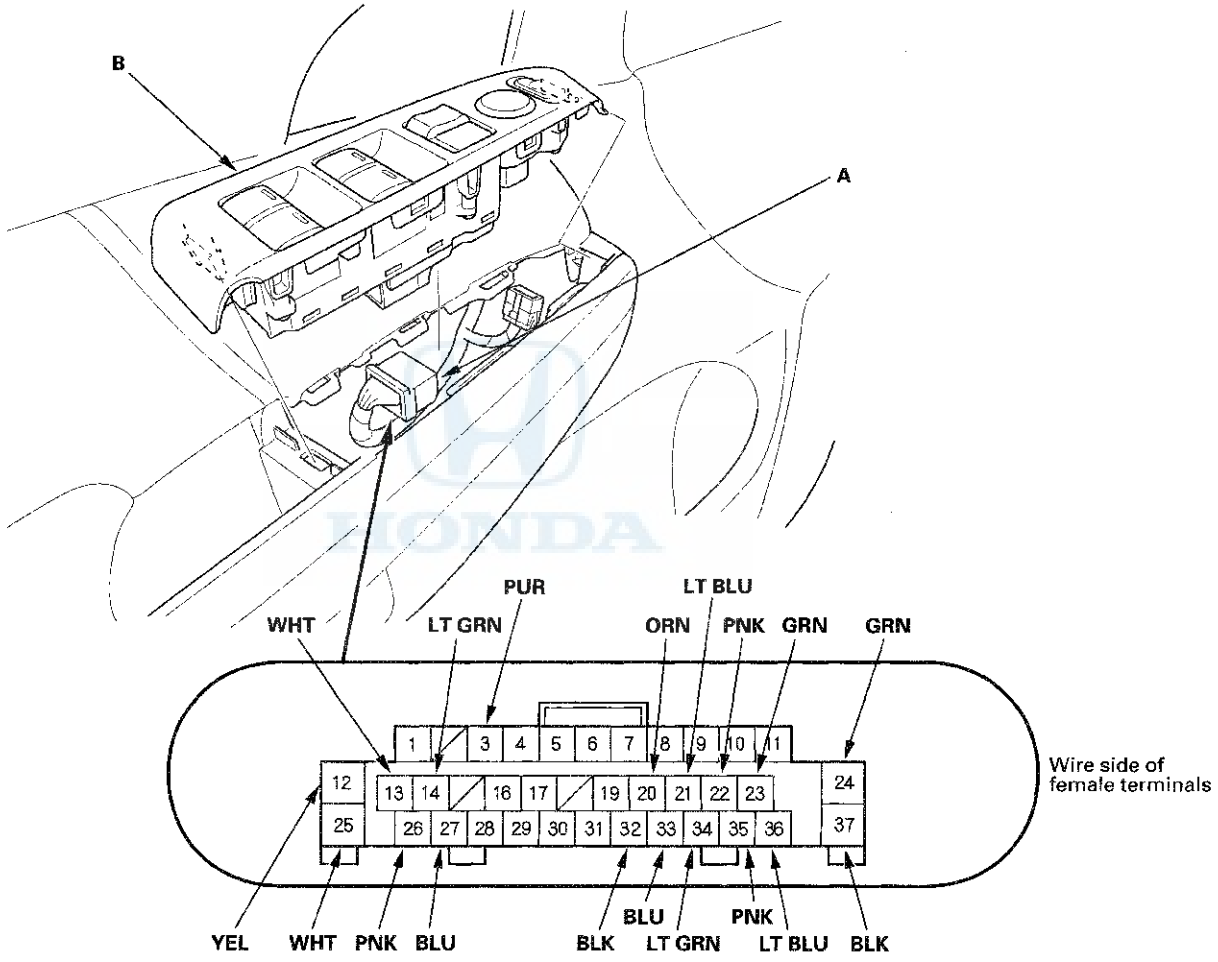

The illustration shows 4-door models.

3. Inspect the connector and socket terminals to be sure they are all making good contact.

   - If the terminals are bent, loose or corroded, repair them as necessary and recheck the system.
   - If the terminals look OK, go to step 4.

4. Reconnect the connector to the power window master switch, turn the ignition switch to ON (II), and make these input tests at the connector.

   - If any test indicates a problem, find and correct the cause, then recheck the system.
   - If all the input tests prove OK, go to step 5.

Cavity	Wire	Test condition	Test: Desired result	Possible cause if desired result is not obtained
32	BLK	Under all conditions	Measure the voltage to ground: There should be less than 0.5 V.	• Poor ground (G501) • An open in the wire
37	BLK	Under all conditions	Measure the voltage to ground: There should be less than 0.5 V.	• Poor ground (G502) • An open in the wire
13	WHT	Under all conditions	Measure the voltage to ground: There should be battery voltage.	• Blown No. 15 (10 A) fuse in the under-hood fuse/relay box • Faulty driver's under-dash fuse/relay box • An open in the wire
14	LT GRN	Ignition switch ON (II)	Measure the voltage to ground: There should be battery voltage.	• Blown No. 16 (7.5 A) fuse in the driver's under-dash fuse/relay box • Faulty driver's under-dash fuse/relay box • An open in the wire
25	WHT	Under all conditions	Measure the voltage to ground: There should be battery voltage.	• Blown No. 24 (20 A) fuse in the driver's under-dash fuse/relay box • Faulty driver's under-dash fuse/relay box • An open in the wire
3	PUR	Ignition switch ON (II)	Measure the voltage to ground: There should be battery voltage.	• Faulty power window master switch • A short to ground in the wire
20	ORN	Ignition switch ON (II), and driver's power window moving up or down	Measure the voltage between the terminals No. 20 and No. 37: An analog voltmeter should read about 0 V—about 5 V—0 V—about 5 V repeatedly (a digital voltmeter should read about 2.5 V while the window moves).	• Faulty power window master switch • Faulty driver's power window motor • An open in the wire • A short to ground in the wire
22	PNK	Ignition switch ON (II), and driver's power window moving up or down	Measure the voltage between the terminals No. 22 and No. 37: An analog voltmeter should read about 0 V—about 5 V—0 V—about 5 V repeatedly (a digital voltmeter should read about 2.5 V while the window moves).	• Faulty power window master switch • Faulty driver's power window motor • An open in the wire • A short to ground in the wire

(cont'd)

Power Window Master Switch Input Test (cont'd)

5. Turn the ignition switch to LOCK (0), open and close the driver's door, then disconnect the 37P connector from the power window master switch again.

6. With the connector still disconnected, make these input tests at the connector.

   - If any test indicates a problem, find and correct the cause, then recheck the system.
   - If all the input tests prove OK, the door multiplex control unit must be faulty, replace the power window master switch.

   NOTE: After replacing the power window master switch, reset the power window control unit (see page 22-251).

Cavity	Wire	Test condition	Test: Desired result	Possible cause if desired result is not obtained
12 24	YEL GRN	Ignition switch ON (II), connect terminals No. 25 and No. 24 (or No. 12), and terminals No. 12 (or No. 24) and No. 37 with jumper wires.	Check driver's power window motor operation: The driver's power window should open (or close).	• Faulty driver's power window motor • An open in the wire
23 (4-door) 36 (4-door)	GRN LT BLU	Ignition switch ON (II), connect terminals No. 25 and No. 36 (or No. 23), and terminals No. 23 (or No. 36) and No. 37 with jumper wires.	Check left rear power window motor operation: The left rear power window should open (or close).	• Poor ground (G601) • Faulty left rear power window switch • Faulty left rear power window motor • An open in the wire
21 (4-door) 34 (4-door)	LT BLU LT GRN	Ignition switch ON (II), connect terminals No. 25 and No. 34 (or No. 21), and terminals No. 21 (or No. 34) and No. 37 with jumper wires.	Check right rear power window motor operation: The right rear power window should open (or close).	• Faulty passenger's under-dash fuse/relay box • Poor ground (G651) • Faulty right rear power window switch • Faulty right rear power window motor • An open in the wire
26 (4-door)	PNK	Ignition switch ON (II), connect terminals No. 25 and No. 26 with a jumper wire.	Check left and right rear power window switch lights: The left and right rear power window switch lights should come on.	• Faulty LED • Poor ground (G601, G651) • Faulty left or right rear power window switch • An open in the wire
27	BLU	Disconnect the front passenger's power window switch 37P connector.	Check for continuity between the terminal No. 27 and the front passenger's power window switch 37P connector terminal No. 29: There should be continuity.	An open in the wire
			Check for continuity to ground: There should be no continuity.	A short in the wire
33	BLU	Disconnect the driver's under-dash fuse/relay box connector P (20P)	Check for continuity between the terminal No. 33 and the driver's under-dash fuse/relay box connector P (20P) terminal No. 5: There should be continuity.	An open in the wire
			Check for continuity to ground: There should be no continuity.	A short in the wire
35	PNK	Disconnect the driver's under-dash fuse/relay box connector P (20P)	Check for continuity between the terminal No. 35 and the driver's under-dash fuse/relay box connector P (20P) terminal No. 6: There should be continuity.	An open in the wire
			Check for continuity to ground: There should be no continuity.	A short in the wire

Front Passenger's Power Window Switch Input Test

1. Turn the ignition switch to LOCK (0), open and close the driver's door, then remove the front passenger's power window switch (see page 22-276).

2. Disconnect the 37P connector (A) from the front passenger's power window switch (B).

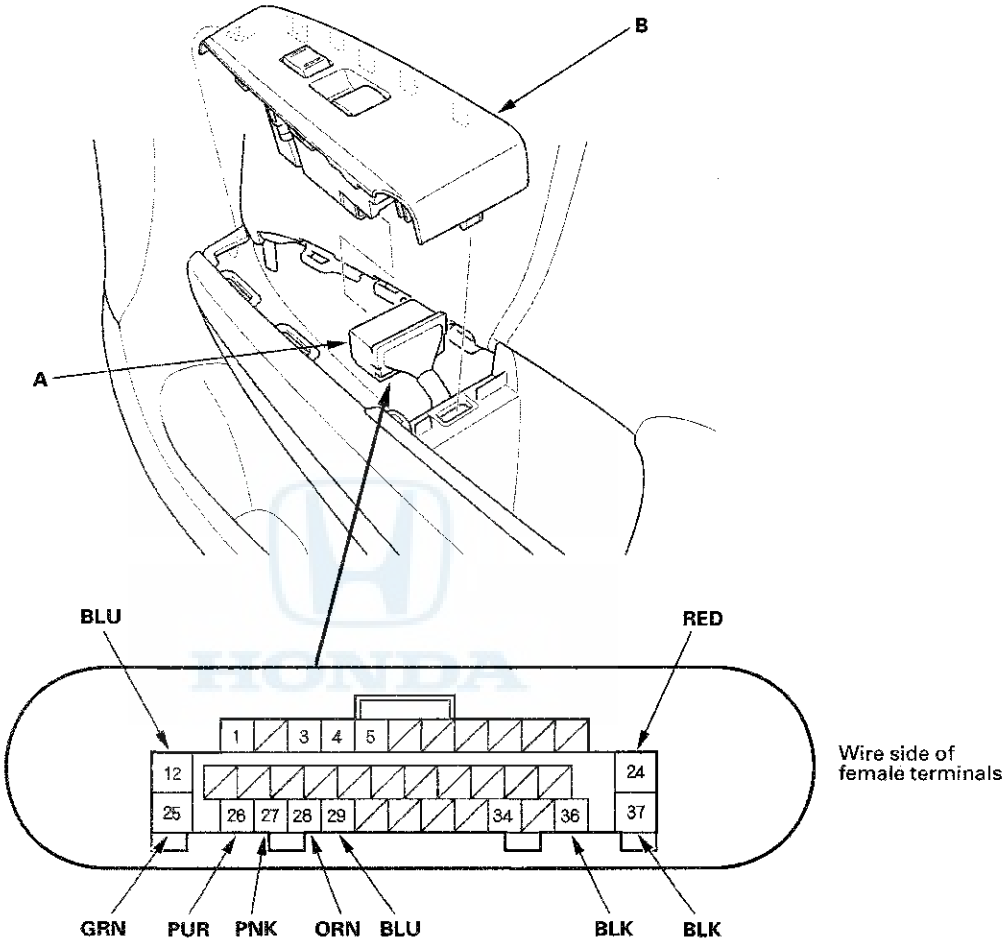

3. Inspect the connector and socket terminals to be sure they are all making good contact.

   - If the terminals are bent, loose or corroded, repair them as necessary and recheck the system.
   - If the terminals look OK, go to step 4.

(cont'd)

Front Passenger's Power Window Switch Input Test (cont'd)

4. Reconnect the connector to the front passenger's power window switch, turn the ignition switch to ON (II), and make these input tests at the connector.

   - If any test indicates a problem, find and correct the cause, then recheck the system.
   - If all the input tests prove OK, go to step 5.

Cavity	Wire	Test condition	Test: Desired result	Possible cause if desired result is not obtained
37	BLK	Under all conditions	Measure the voltage to ground: There should be less than 0.5 V.	• Poor ground (G505) • An open in the wire
25	GRN	Under all conditions	Measure the voltage to ground: There should be battery voltage.	• Blown No. 13 (20 A) fuse in the passenger's under-dash fuse/relay box • Faulty driver's under-dash fuse/relay box • Faulty passenger's under-dash fuse/relay box • An open in the wire
26*	PUR	Ignition switch ON (II)	Measure the voltage to ground: There should be battery voltage.	• Faulty front passenger's power window switch • A short to ground in the wire
27*	PNK	Ignition switch ON (II), and front passenger's power window switch moving up or down	Measure the voltage between the terminals No. 27 and No. 37: An analog voltmeter should read about 0 V—about 5 V—0 V—about 5 V repeatedly (a digital voltmeter should read about 2.5 V while the window moves).	• Faulty front passenger's power window switch • Faulty front passenger's power window motor • An open in the wire • A short to ground in the wire
28*	ORN	Ignition switch ON (II), and front passenger's power window switch moving up or down	Measure the voltage between the terminals No. 28 and No. 37: An analog voltmeter should read about 0 V—about 5 V—0 V—about 5 V repeatedly (a digital voltmeter should read about 2.5 V while the window moves).	• Faulty front passenger's power window switch • Faulty front passenger's power window motor • An open in the wire • A short to ground in the wire
36*	BLK	Under all conditions, disconnect the front passenger's power window motor 6P connector.	Check for continuity to ground: There should be continuity.	• Poor ground (G505) • An open in the wire

*: Front passenger's power window AUTO UP/AUTO DOWN function

5. Turn the ignition switch to LOCK (0), open and close the driver's door, then disconnect the 37P connector from the front passenger's power window switch again.

6. With the connector still disconnected, make these input tests at the connector.

   - If any test indicates a problem, find and correct the cause, then recheck the system.
   - If all the input tests prove OK, replace the front passenger's power window switch, then go to step 7.

Cavity	Wire	Test condition	Test: Desired result	Possible cause if desired result is not obtained
12	BLU	Under all conditions, connect terminals No. 25 and No. 24 (or No. 12), and terminals No. 12 (or No. 24) and No. 37 with jumper wires.	Check front passenger's power window motor operation: The front passenger's power window should open (or close).	• Faulty front passenger's power window motor • An open in the wire
24	RED			
29	BLU	Under all conditions, disconnect the power window master switch 37P connector.	Check for continuity between the terminal No. 29 and the power window master switch 37P connector terminal No. 27: There should be continuity.	An open in the wire

7. With the front passenger's power window AUTO UP/AUTO DOWN function, reset the power window control unit (see page 22-251).

HONDA

Driver's Power Window Motor Test

Motor Test

1. Remove the power window master switch (see page 22-275).

2. Test the motor in each direction by connecting battery power and ground to the power window master switch 37P connector (A) according to the table.

Direction \ Terminal	12	24
UP	⊕	⊖
DOWN	⊖	⊕

4-door

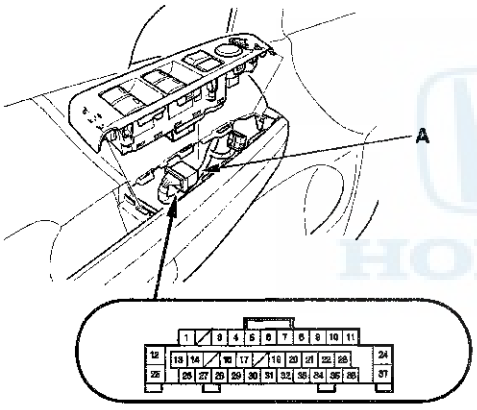

Wire side of female terminals

2-door

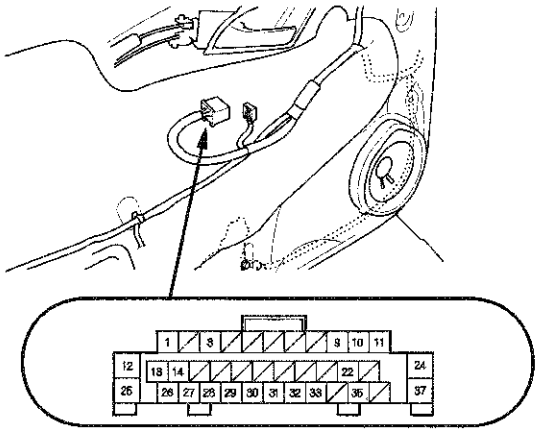

Wire side of female terminals

3. If the motor does not run or fails to run smoothly, go to step 4, if the motor runs smoothly, go to step 8.

4. For 4-door models: Remove the door panel (see page 20-16).

5. Disconnect the 6P connector (A) from the driver's power window motor (B).

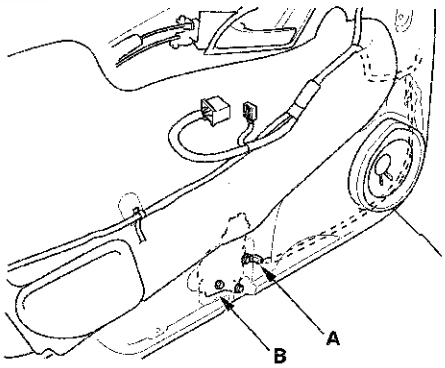

6. Check for continuity between the door multiplex control unit 37P connector terminals and driver's power window motor 6P connector terminals as shown:

Door multiplex control unit 37P connector	Driver's power window motor 6P connector
12	4
24	1

DRIVER'S POWER WINDOW MOTOR 6P CONNECTOR
Wire side of female terminals

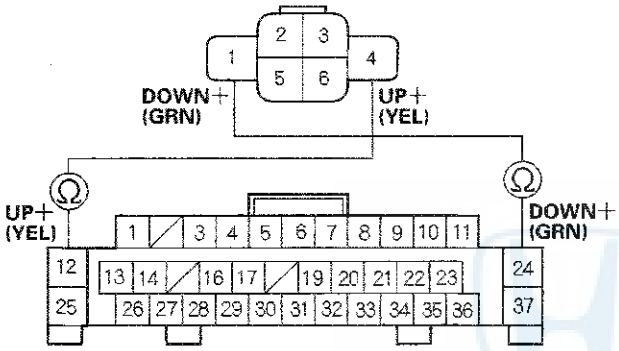

DOOR MULTIPLEX CONTROL UNIT 37P CONNECTOR
Wire side of female terminals

7. If the wire harness is OK, replace the driver's power window motor.

Pulser Test

8. Check for continuity between the driver's power window motor 6P connector terminal No. 2 and body ground. There should be continuity.

   - If there is continuity, go to step 9.
   - If there is no continuity, check for an open in the BLK wire or poor ground (G501).

DRIVER'S POWER WINDOW MOTOR 6P CONNECTOR

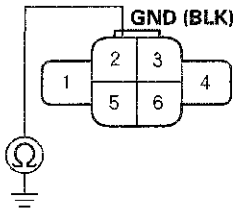

Wire side of female terminals

9. Do the power window master switch input test terminals No. 3, No. 20, and No. 22 (see page 22-262).

Front Passenger's Power Window Motor Test

With AUTO UP/AUTO DOWN function

Motor Test

1. Remove the front passenger's power window switch:

   - 4-door (see page 22-276)
   - 2-door (see page 22-276)

2. Test the motor in each direction by connecting battery power and ground to the front passenger's power window switch 37P connector (A) according to the table.

Direction \ Terminal	12	24
UP	⊕	⊖
DOWN	⊖	⊕

4-door

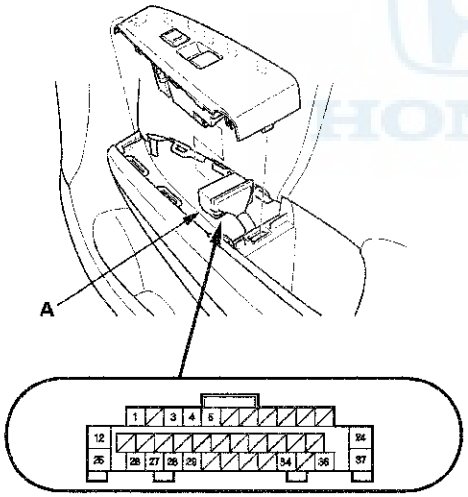

Wire side of female teminals

2-door

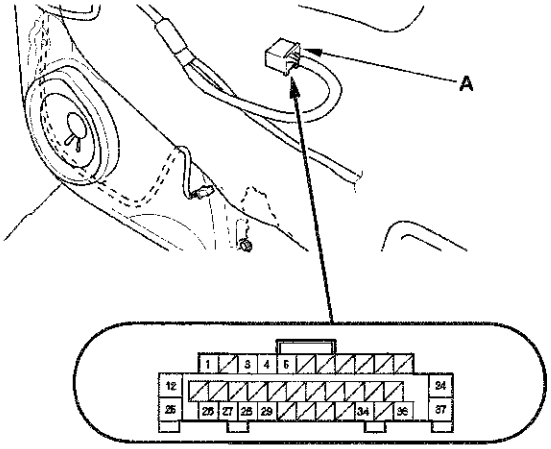

Wire side of female terminals

3. If the motor does not run or fails to run smoothly, go to step 4, if the motor runs smoothly, go to step 8.

4. For 4-door models: remove the door panel (see page 20-16).

5. Disconnect the 6P connector (A) from the front passenger's power window motor (B).

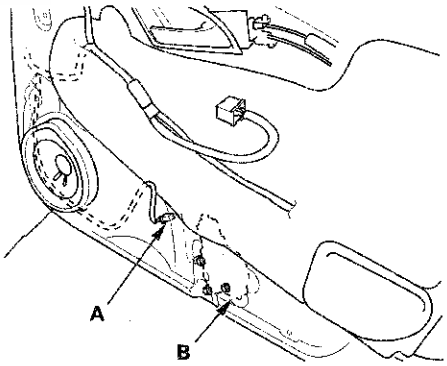

6. Check for continuity between the front passenger's power window switch 37P connector terminals and front passenger's power window motor 6P connector terminals as shown:

Front passenger's power window switch 37P connector	Front passenger's power window motor 6P connector
12	4
24	1

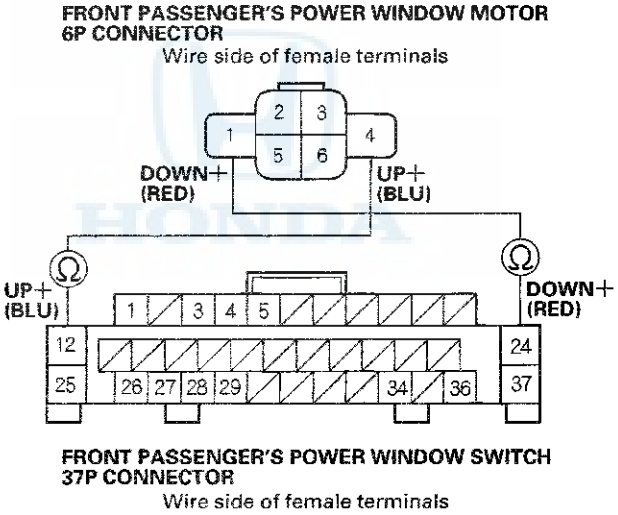

7. If the wire harness is OK, replace the front passenger's power window motor.

Pulser Test

8. Do the front passenger's power window switch input test at terminals No. 26, No. 27, and No. 28 (see page 22-265).

Front Passenger's Power Window Motor Test (cont'd)

Without AUTO UP/AUTO DOWN function

1. Remove the front passenger's power window switch.

   - 4-door (see page 22-276)
   - 2-door (see page 22-276)

2. Test the motor in each direction by connecting battery power and ground to the front passenger's power window switch 37P connector (A) according to the table.

Direction \ Terminal	12	24
UP	⊕	⊖
DOWN	⊖	⊕

4-door

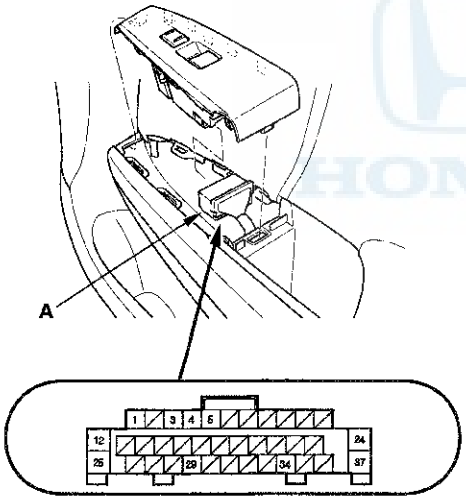

Wire side of female teminals

2-door

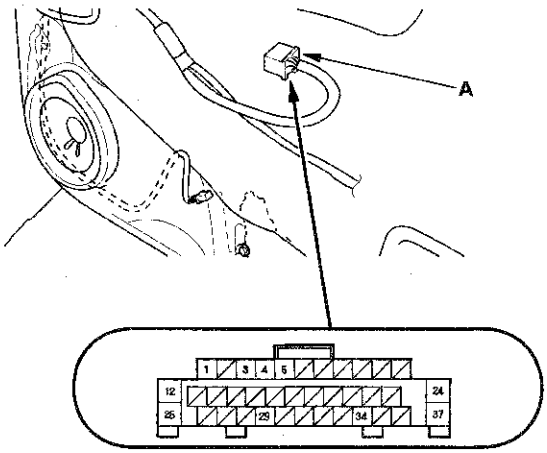

Wire side of female terminals

3. If the motor does not run or fails to run smoothly, go to step 4.

4. For 4-door models: remove the door panel (see page 20-16).

5. Disconnect the 2P connector (A) from the front passenger's power window motor (B).

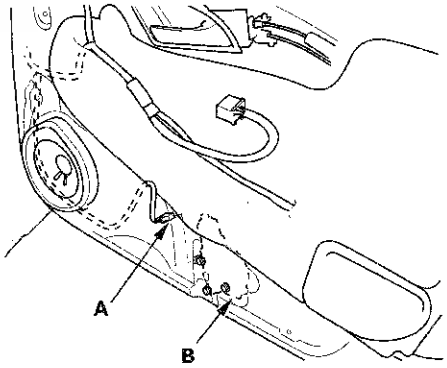

6. Check for continuity between the front passenger's power window switch 37P connector terminals and front passenger's power window motor 2P connector terminals as shown:

Front passenger's power window switch 37P connector	Front passenger's power window motor 2P connector
12	2
24	1

FRONT PASSENGER'S POWER WINDOW MOTOR 2P CONNECTOR
Wire side of female terminals

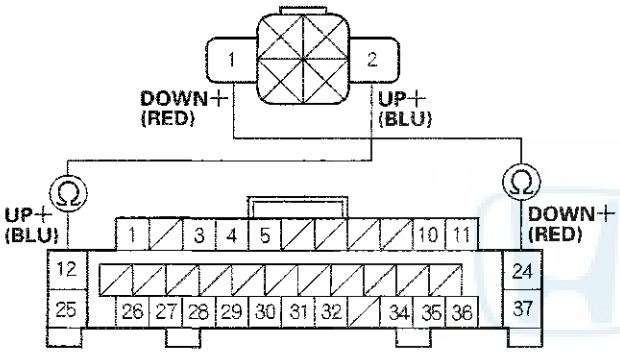

FRONT PASSENGER'S POWER WINDOW SWITCH 37P CONNECTOR
Wire side of female terminals

7. If the wire harness is OK, replace the front passenger's power window motor.

Rear Power Window Motor Test

1. Remove the rear power window switch (see page 22-277).

2. Test the motor in each direction by connecting battery power and ground to the rear power window switch 14P connector (A) according to the table.

Direction \ Terminal	1	7
UP	⊖	⊕
DOWN	⊕	⊖

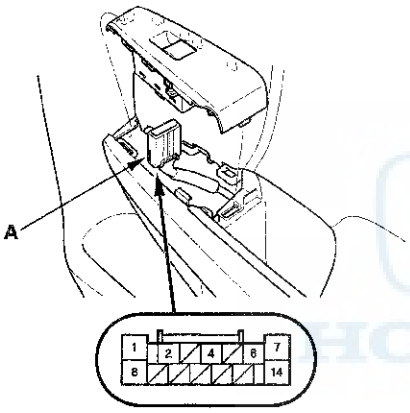

Wire side of female terminals

3. If the motor does not run or fails to run smoothly, go to step 4.

4. Remove the door panel (see page 20-35).

5. Disconnect the 2P connector (A) from the rear power window motor (B).

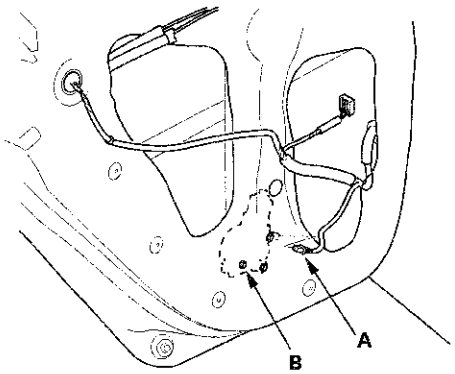

6. Check for continuity between the rear power window switch 14P connector terminals and rear power window motor 2P connector terminals as shown:

Rear power window switch 14P connector	Rear power window motor 2P connector
1	1
7	2

REAR POWER WINDOW MOTOR 2P CONNECTOR
Wire side of female terminals

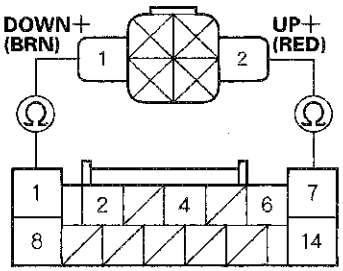

REAR POWER WINDOW SWITCH 14P CONNECTOR
Wire side of female terminals

7. If the wire harness is OK, replace the rear power window motor.

Power Window Master Switch Replacement

4-door

1. Carefully remove the power window master switch (A).

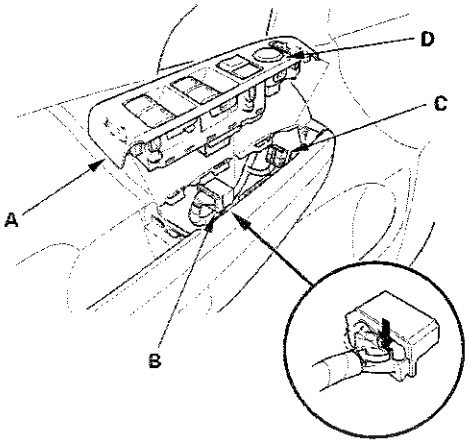

2. Disconnect the 37P connector (B) from the power window master switch, and the 13P connector (C) from the power mirror switch (D).

3. Remove the four screws and the power window master switch (A).

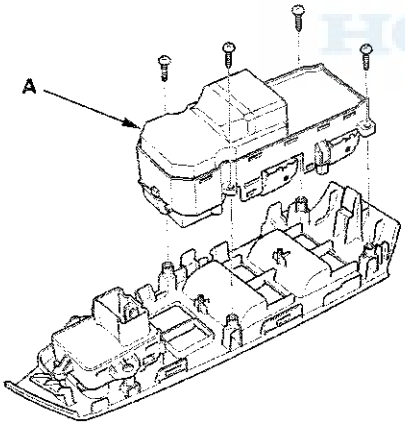

4. Install the switch in the reverse order of removal.

5. Reset the power window control unit (see page 22-251).

2-door

1. Remove the driver's door panel (see page 20-12).

2. Disconnect the 37P connector (A) from the power window master switch (B) and the 13P connector from the power mirror switch.

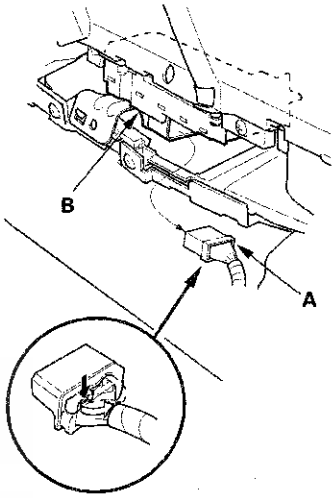

3. Remove the switch panel and armrest from the door panel (see page 20-12).

4. Remove the four screws and the power window master switch (A).

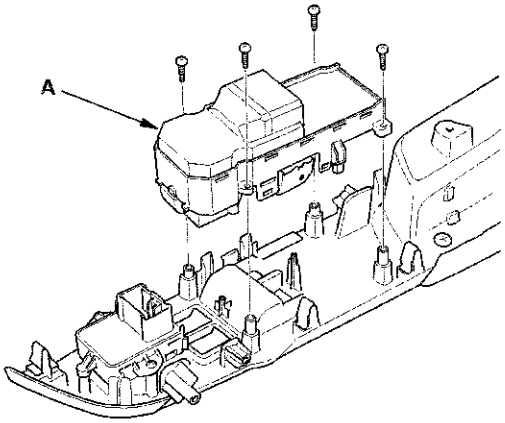

5. Install the switch in the reverse order of removal.

6. Reset the power window control unit (see page 22-251).

Front Passenger's Power Window Switch Replacement

4-door

1. Carefully remove the front passenger's power window switch (A).

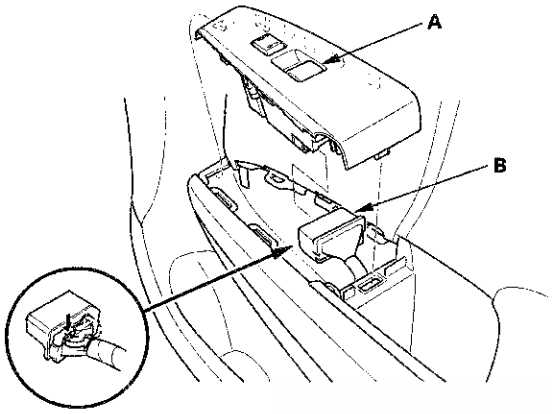

2. Disconnect the 37P connector (B) from the front passenger's power window switch.

3. Remove the four screws and the front passenger's power window switch (A).

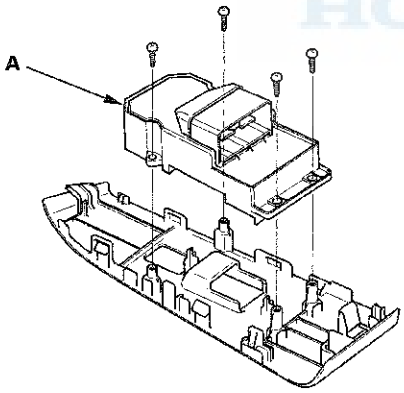

4. Install the switch in the reverse order of removal.

5. With AUTO UP/AUTO DOWN function: Reset the power window control unit (see page 22-251).

2-door

1. Remove the passenger's door panel (see page 20-16).

2. Disconnect the 37P connector (A) from the passenger's power window switch (B).

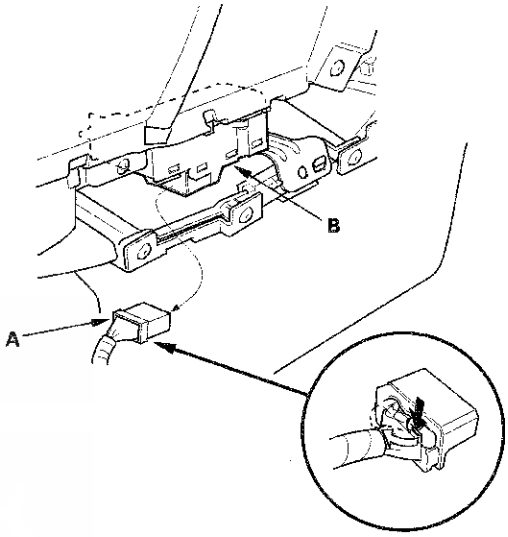

3. Remove the switch panel and armrest from the door panel (see page 20-16).

4. Remove the four screws and the passenger's power window switch (A).

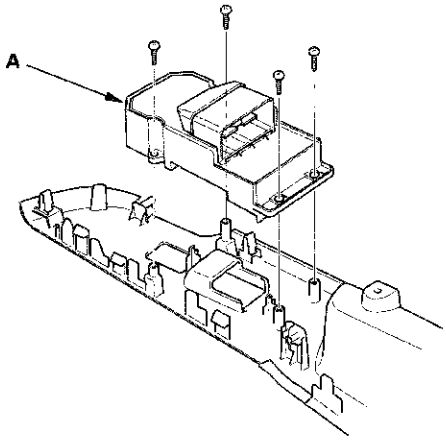

5. Install the switch in the reverse order of removal.

6. With AUTO UP/AUTO DOWN function: Reset the power window control unit (see page 22-251).

Rear Power Window Switch Test/Replacement

1. Carefully remove the rear power window switch (A).

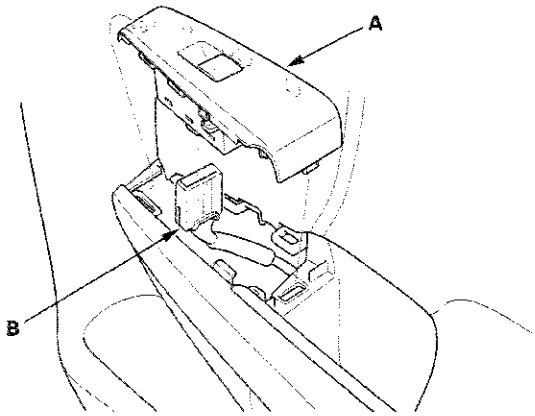

2. Disconnect the 14P connector (B) from the rear power window switch.

3. Remove the three screws and the rear power window switch (A).

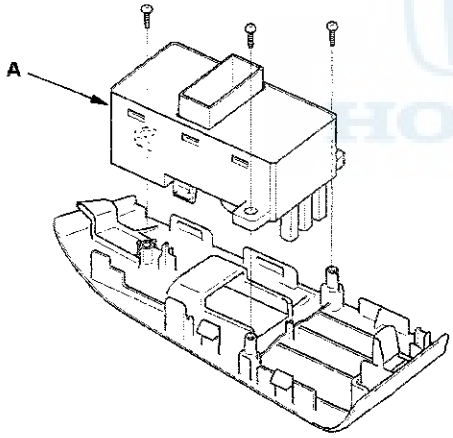

4. Swap the rear power window switch with another known-good rear power window switch and test. If the original power window switch is faulty; replace it.

5. Install the switch in the reverse order of removal.

Component Location Index

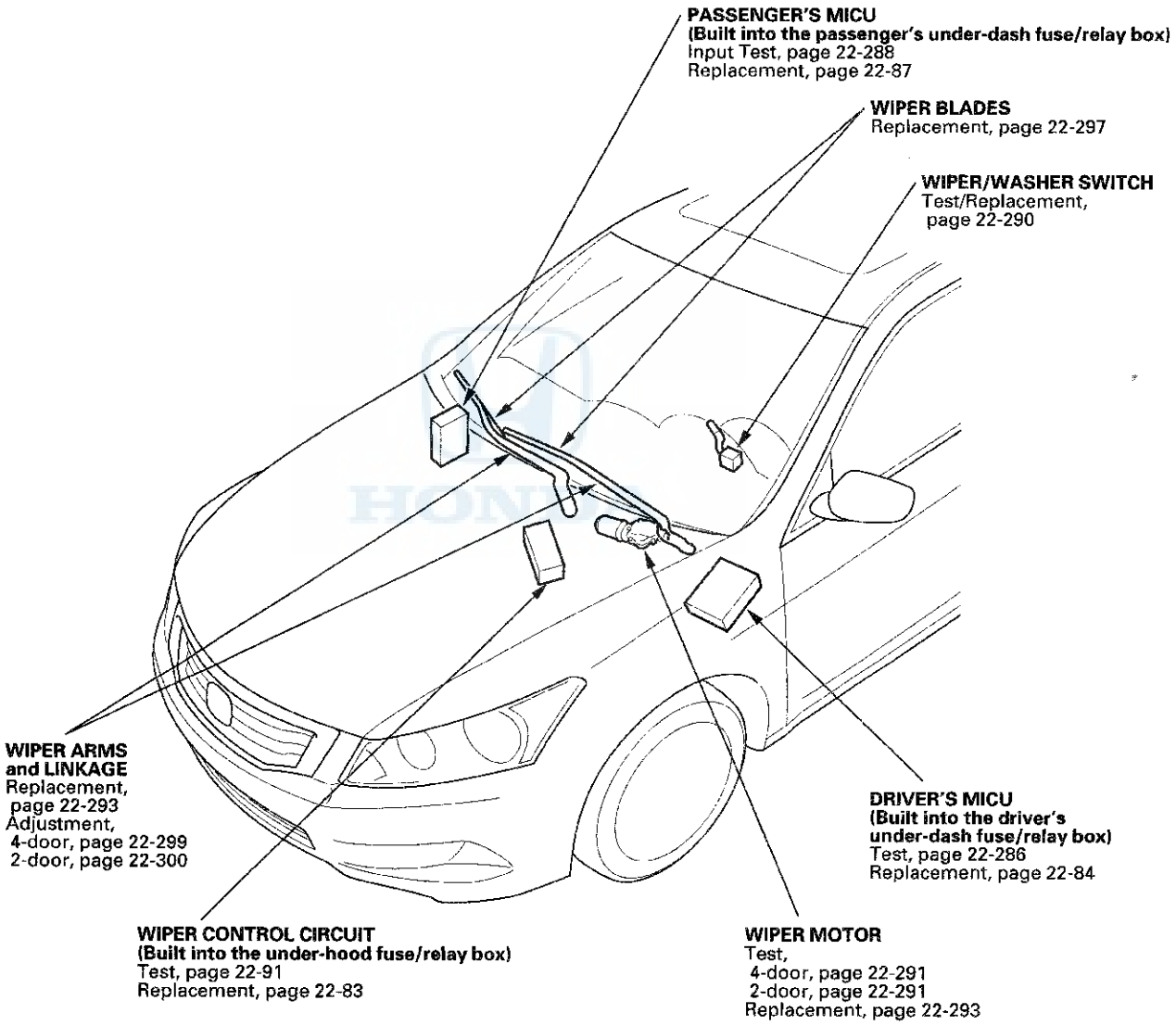

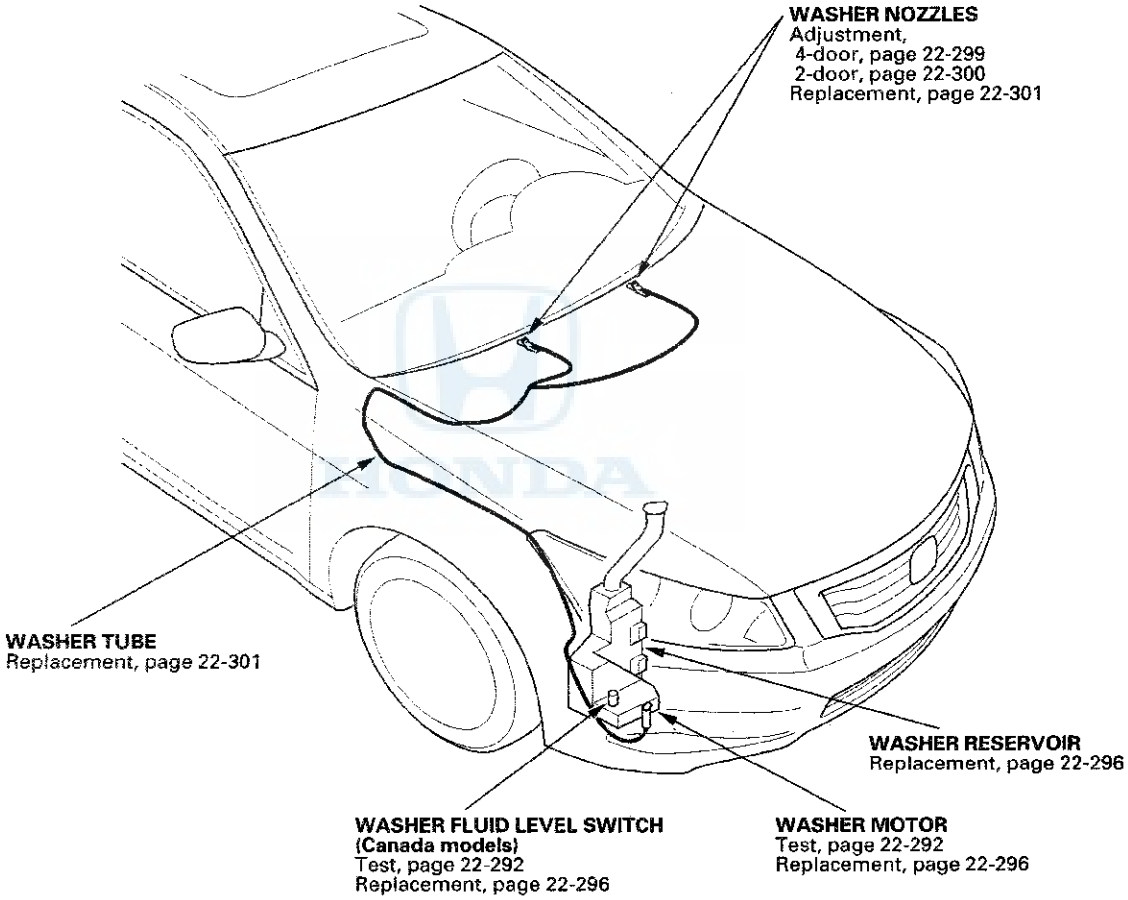
WASHER NOZZLES
Adjustment,
4-door, page 22-299
2-door, page 22-300
Replacement, page 22-301
WASHER TUBE
Replacement, page 22-301
WASHER RESERVOIR
Replacement, page 22-296
WASHER FLUID LEVEL SWITCH
(Canada models)
Test, page 22-292
Replacement, page 22-296
WASHER MOTOR
Test, page 22-292
Replacement, page 22-296

Circuit Diagram

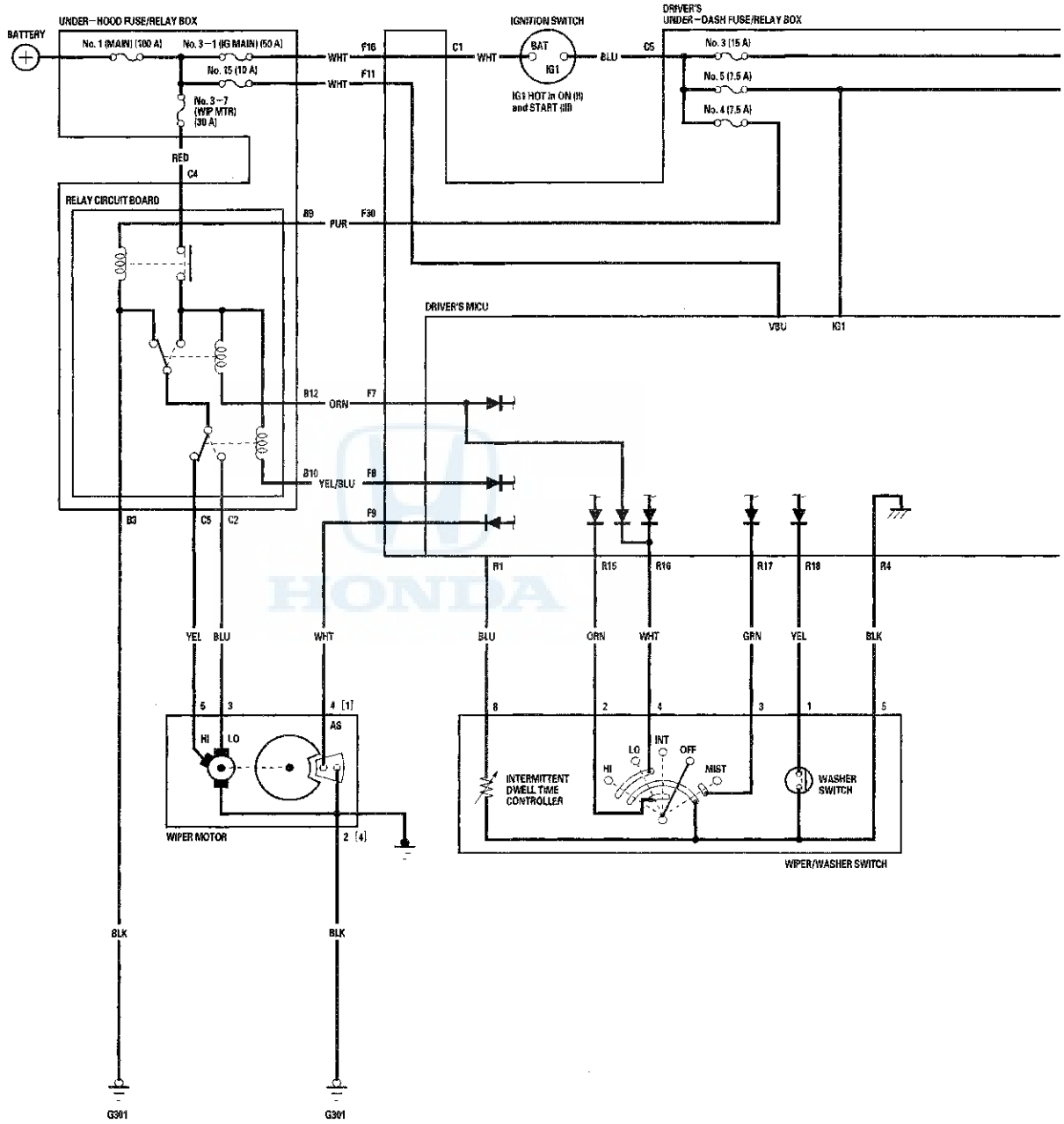

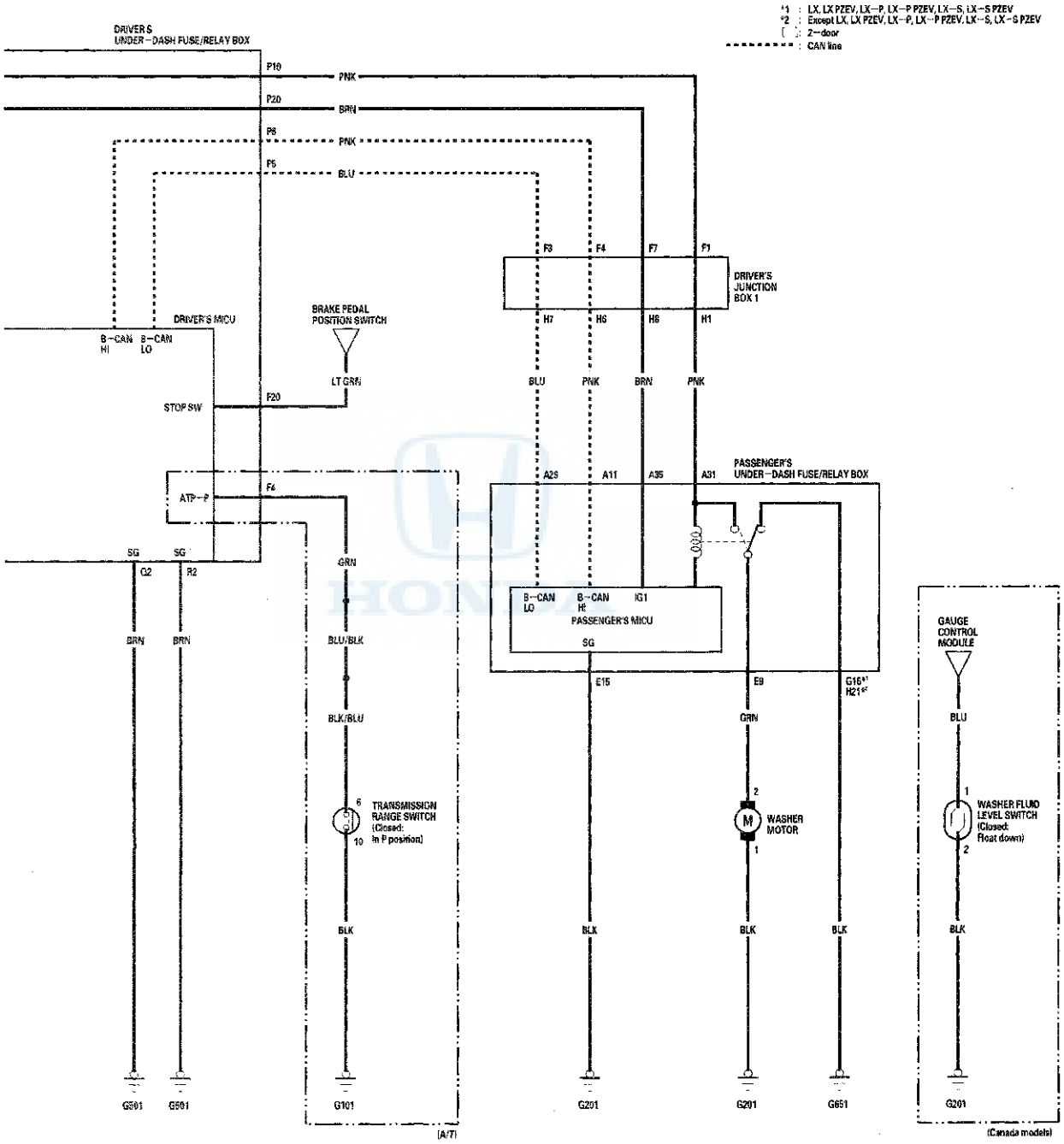
*1 : LX, LX PZEV, LX—P, LX—P PZEV, LX—S, LX—S PZEV
*2 : Except LX, LX PZEV, LX—P, LX—P PZEV, LX—S, LX—S PZEV
[ ] : 2—door
: CAN line
DRIVER'S UNDER—DASH FUSE/RELAY BOX
P10
PNK
P20
BRN
P8
PNK
P5
BLU
F3
F4
F7
F1
DRIVER'S JUNCTION BOX 1
H7
H6
H6
H1
DRIVER'S MICU
B—CAN HI
B—CAN LO
BRAKE PEDAL POSITION SWITCH
LT GRN
STOP SW
F20
BLU
PNK
BRN
PNK
PASSENGER'S UNDER—DASH FUSE/RELAY BOX
A29
A11
A35
A31
ATP—P
F4
SG
SG
G2
R2
GRN
B—CAN LO
B—CAN HI
IG1
PASSENGER'S MICU
SG
BRN
BRN
BLU/BLK
BLK/BLU
E15
E9
G16*1
H21*2
GRN
TRANSMISSION RANGE SWITCH (Closed: in P position)
WASHER MOTOR
BLK
BLK
BLK
BLK
G601
G601
G101
G201
G201
G651
(A/T)
GAUGE CONTROL MODULE
BLU
WASHER FLUID LEVEL SWITCH (Closed: Float down)
BLK
G201
(Canada models)

DTC Troubleshooting

DTC B1077: Wiper Auto-stop (AS) Signal Circuit Malfunction

NOTE: If you are troubleshooting multiple DTCs, be sure to follow the instructions in B-CAN System Diagnosis Test Mode A (see page 22-120).

1. Clear the DTCs with the HDS.
2. Turn the ignition switch to LOCK (0), and the wiper switch ON.
3. Turn the wiper switch to LOW or HIGH for at least 15 seconds, then turn the switch OFF.

   NOTE: If the wiper motor does not run, go to step 7.

   Does the wiper arms stop at the AUTO STOP (park) position?

   YES—Go to step 4.

   NO—Go to step 5.
4. Check for DTCs with the HDS.

   Is DTC B1077 indicated?

   YES—Check for loose or poor connections at the driver's MICU and the wiper motor. If the connections are OK, substitute a known-good driver's MICU (driver's under-dash fuse/relay box), and recheck. If the DTC does not reappear, replace the driver's under-dash fuse/relay box. ■

   NO—Intermittent failure, the system is OK at this time. Check for loose or poor connections. ■
5. Turn the ignition switch to LOCK (0).
6. Check the No. 3 (WIP MTR) (30 A) fuse in the under-hood fuse/relay box.

   Is the fuse OK?

   YES—Go to step 7.

   NO—Replace the fuse, and recheck the system. ■
7. Do the wiper motor test (see page 22-292).

   Is the wiper motor OK?

   YES—Go to step 8.

   NO—Replace the wiper motor and recheck. ■
8. Reconnect the wiper motor 5P connector.
9. Measure the voltage between body ground and the wiper motor 5P connector terminal No. 3 with the wiper switch ON (Low), and measure the voltage between body ground and the wiper motor 5P connector terminal No. 5 with the wiper switch ON (High) respectively.

WIPER MOTOR 5P CONNECTOR

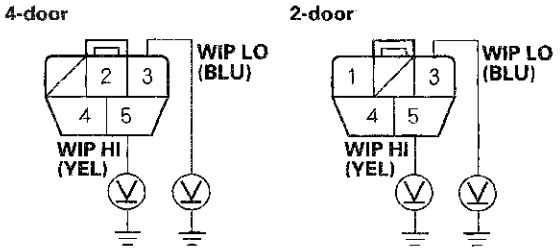

Wire side of female terminals

Is there battery voltage?

YES—Go to step 10.

NO—Test the wiper relay circuit (see page 22-91). If the relay circuit is OK, check the terminals F7 and F8 of driver's under-dash fuse/relay box connector F (33P) by the input test (see page 22-286). If the input tests prove OK, replace the driver's under-dash fuse/relay box (see page 22-84). If the relay circuit is faulty, replace the left engine compartment wire harness. ■

10. Measure the voltage between body ground and the wiper motor 5P connector terminal No. 2 [No. 4] .
[ ] : 2-door

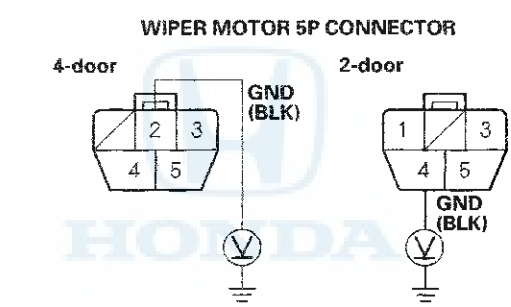

Wire side of female terminals

Is there less than 0.5 V?

YES—Repair an open or high resistance in the BLU (low) or YEL (high) wire.■

NO—Repair an open in the BLK wire or poor ground (G301).■

DTC Troubleshooting (cont'd)

DTC B1281: Windshield Wiper Switch MIST Position Circuit Malfunction

DTC B1282: Wiper Switch INT Position Circuit Malfunction

DTC B1283: Wiper Switch LOW Position Circuit Malfunction

DTC B1284: Wiper Switch HIGH Position Circuit Malfunction

NOTE: If you are troubleshooting multiple DTCs, be sure to follow the instructions in B-CAN System Diagnosis Test Mode A (see page 22-120).

1. Clear the DTCs with the HDS.
2. Turn the ignition switch to LOCK (0) and then back to ON (II).
3. Turn the wiper switch to the MIST, INT, LOW, HIGH, and OFF positions, and wait for 6 seconds or more.
4. Check for DTCs with the HDS.

   Is DTC B1281, B1282, B1283, or B1284 indicated?

   YES—Go to step 5.

   NO—Intermittent failure, the wiper system is OK at this time. Check for loose or poor connections. ■

5. Select WIPERS from the BODY ELECTRICAL menu, and enter the DATA LIST.
6. Check each wiper switch position value with the DATA LIST menu.

   When the wiper switch is turned OFF

Data List	Value
Wiper switch (LOW)	OFF
Wiper switch (HIGH)	OFF
Wiper switch (MIST)	OFF
Wiper switch (INT)	OFF

   Are all data list values correct?

   YES—Go to step 7.

   NO—Go to step 10.

7. Turn the ignition switch to LOCK (0).
8. Disconnect driver's under-dash fuse/relay box connector R (24P).
9. Check for continuity between driver's under-dash fuse/relay box connector R (24P) terminals as shown:

From terminal	To terminal
15	1, 16, 17
17	1, 16

   Is there continuity?

   YES—Repair a short between the wires. ■

   NO—Faulty driver's MICU; replace the driver's under-dash fuse/relay box. ■

10. Turn the ignition switch to LOCK (0).
11. Disconnect the 8P connector from the wiper switch.
12. Turn the ignition switch to ON (II).
13. Check each wiper switch position value with the DATA LIST menu.

   When the wiper switch is turned OFF

Data List	Value
Wiper switch (LOW)	OFF
Wiper switch (HIGH)	OFF
Wiper switch (MIST)	OFF
Wiper switch (INT)	OFF

   Are all data list values correct?

   YES—Replace the wiper/washer switch. ■

   NO—Go to step 14.

14. Turn the ignition switch to LOCK (0).

15. Disconnect driver's under-dash fuse/relay box connector R (24P).

16. Check for continuity between body ground and the driver's under-dash fuse/relay box connector R (24P) terminals No. 15, No. 16, and No. 17.

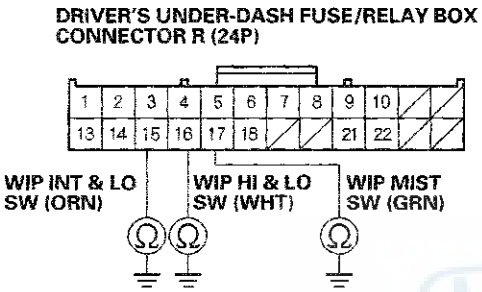

Wire side of female terminals

Is there continuity?

YES—Repair a short to ground in the wire. ■

NO—Go to step 17.

17. Check for continuity between the driver's under-dash fuse/relay box connector R (24P) terminal No. 4 and terminals No. 15, No. 16, and No. 17 individually.

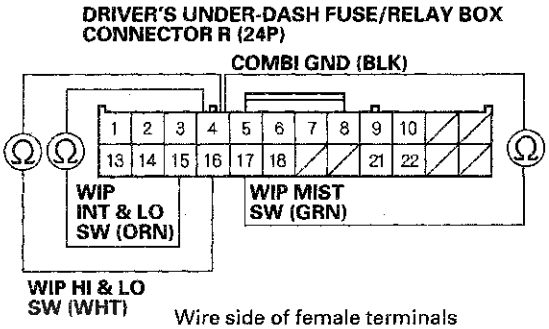

Wire side of female terminals

Is there continuity?

YES—Repair a short between the wire. ■

NO—Faulty driver's MICU; replace the driver's under-dash fuse/relay box. ■

MICU Input Test

NOTE: Before testing, troubleshoot the multiplex integrated control unit first, using B-CAN System Diagnosis Test Mode A (see page 22-120).

Driver's MICU

1. Turn the ignition switch to LOCK (0), and remove the driver's dashboard lower cover (see page 20-153).
2. Disconnect driver's under-dash fuse/relay box connectors F, Q, and R.

   NOTE: All connector views are wire side of female terminals.

CONNECTOR F (33P)

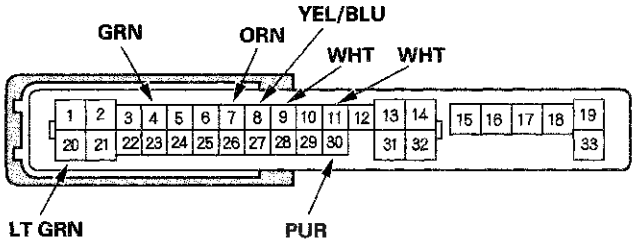

CONNECTOR Q (20P)

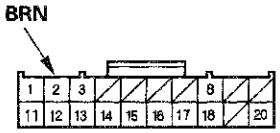

CONNECTOR R (24P)

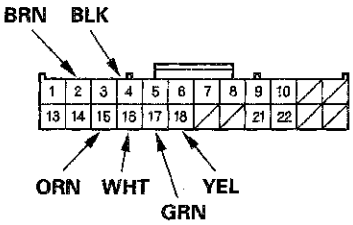

3. Inspect the connector and socket terminals to be sure they are all making good contact.
   - If the terminals are bent, loose or corroded, repair them as necessary and recheck the system.
   - If the terminals look OK, go to step 4.
4. With the connectors still disconnected, make these input tests at the connectors.
   - If any test indicates a problem, find and correct the cause, then recheck the system.
   - If all the input tests prove OK, go to step 5.

Cavity	Wire	Test condition	Test: Desired result	Possible cause if desired result is not obtained
F7 - F30	ORN - PUR	Under all conditions	Connect the terminals F11 and F30 and the terminal F7 to body ground: The wiper motor should run at high speed.	• Blown No. 3 (WIP MTR) (30 A) fuse in the under-hood fuse/relay box • Faulty under-hood fuse/relay box • Faulty relay circuit board • Faulty wiper motor • Poor ground (G301) • An open in the wire
F8	YEL/ BLU	Run the wiper motor by connecting the terminals F11 and the F30 and the terminal F7 and body ground.	Connect the terminal F8 to body ground: The wiper motor speed should change from high speed to low speed.	• Faulty under-hood fuse/relay box • Faulty relay circuit board • Faulty wiper motor • An open in the wire
F9	WHT	Run the wiper motor by connecting the terminals F11 and the F30 and the terminal F7 and body ground.	Check for continuity to ground: The needle of the ohmmeter should pulse. NOTE: Use an ohmmeter.	• Faulty wiper motor • An open in the wire

5. Reconnect the connectors to the driver's under-dash fuse/relay box, turn the ignition switch to ON (II), and make these input tests at the connectors.

- If any test indicates a problem, find and correct the cause, then recheck the system.
- If all the input tests prove OK, go to step 6.

Cavity	Wire	Test condition	Test: Desired result	Possible cause if desired result is not obtained
Q2	BRN	Under all conditions	Measure the voltage to ground: There should be less than 0.5 V.	• Poor ground (G501) • An open in the wire
R2	BRN	Under all conditions	Measure the voltage to ground: There should be less than 0.5 V.	• Poor ground (G501) • An open in the wire
F11	WHT	Under all conditions	Measure the voltage to ground: There should be battery voltage.	• Blown No. 15 (10 A) fuse in the under-hood fuse/relay box • An open in the wire
F4	GRN	Transmission range switch in P	Measure the voltage to ground: There should be less than 1 V.	• Poor ground (G101) • Faulty or improperly adjusted transmission range switch • An open in the wire
		Transmission range switch in any other position than P	Measure the voltage to ground: There should be more than 5 V.	• Blown No. 10 (20 A) fuse in the under-hood fuse/relay box • Faulty brake pedal position switch • A short to power in the wire
F20	LT GRN	Brake pedal pressed	Measure the voltage to ground: There should be battery voltage.	• Blown No. 10 (20 A) fuse in the under-hood fuse/relay box • Faulty brake pedal position switch • An open in the wire
		Brake pedal released	Measure the voltage to ground: There should be no voltage.	• Faulty brake pedal position switch • A short to power in the wire
R15 · R4	ORN · BLK	Wiper switch (INT or LO) ON	Measure the voltage between the terminals R15 and the R4: There should be less than 1 V.	• Faulty wiper/washer switch • An open in the wire
		Wiper switch OFF	Measure the voltage between the terminals R15 and the R4: There should be more than 5 V.	• Faulty wiper/washer switch • A short to ground in the wire
R16 · R4	WHT · BLK	Wiper switch (LO or HI) ON	Measure the voltage between the terminals R16 and the R4: There should be less than 1 V.	• Faulty wiper/washer switch • An open in the wire
		Wiper switch OFF	Measure the voltage between the terminals R16 and the R4: There should be more than 5 V.	• Faulty wiper/washer switch • A short to ground in the wire
R17 · R4	GRN · BLK	Wiper switch (MIST) ON	Measure the voltage between the terminals R17 and the R4: There should be less than 1 V.	• Faulty wiper/washer switch • An open in the wire
		Wiper switch OFF	Measure the voltage between the terminals R17 and the R4: There should be more than 5 V.	• Faulty wiper/washer switch • A short to ground in the wire
R18 · R4	YEL · BLK	Washer switch ON	Measure the voltage between the terminals R18 and the R4: There should be less than 1 V.	• Faulty wiper/washer switch • An open in the wire
		Washer switch OFF	Measure the voltage between the terminals R18 and the R4: There should be more than 5 V.	• Faulty wiper/washer switch • A short to ground in the wire

(cont'd)

MICU Input Test (cont'd)

Passenger's MICU

6. Turn the ignition switch to LOCK (0), and remove the right kick panel.

   - 2-door (see page 20-97)
   - 4-door (see page 20-99)

7. Disconnect passenger's under-dash fuse/relay box connectors A, E, G [*1] and H [*2].
   * 1: LX, LX PZEV, LX-P, LX-P PZEV, LX-S, LX-S PZEV
   * 2: Except LX, LX PZEV, LX-P, LX-P PZEV, LX-S, LX-S PZEV

   NOTE: All connector views are wire side of female terminals.

CONNECTOR A (33P)

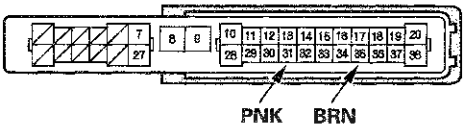

CONNECTOR G (16P)
(LX, LX PZEV, LX-P, LX-P PZEV, LX-S, LX-S PZEV)

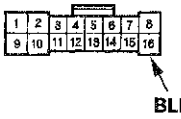

CONNECTOR E (18P)

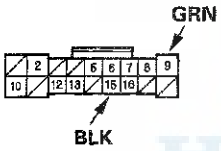

CONNECTOR H (38P)
(Except LX, LX PZEV, LX-P, LX-P PZEV, LX-S, LX-S PZEV)

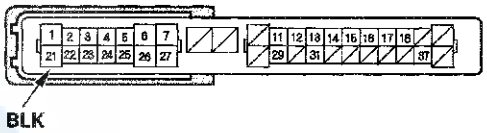

8. With the connectors still disconnected, make these input tests at the connectors.

   - If any test indicates a problem, find and correct the cause, then recheck the system.
   - If all the input tests prove OK, go to step 9.

Cavity	Wire	Test condition	Test: Desired result	Possible cause if desired result is not obtained
E9	GRN	Ignition switch ON (II)	Connect the terminals A31 and the E9: The washer motor should run.	• Poor ground (G201) • Faulty washer motor • An open in the wire

9. Reconnect the connectors to the passenger's under-dash fuse/relay box, and make these input tests at the connectors.

   - If any test indicates a problem, find and correct the cause, then recheck the system.
   - If all the input tests prove OK, Go to step 10.

Cavity	Wire	Test condition	Test: Desired result	Possible cause if desired result is not obtained
E15	BLK	Under all conditions	Measure the voltage to ground: There should be less than 0.5 V.	• Poor ground (G201) • An open in the wire
G16*1	BLK	Under all conditions	Measure the voltage to ground: There should be less than 0.5 V.	• Poor ground (G651) • An open in the wire
H21*2	BLK	Under all conditions	Measure the voltage to ground: There should be less than 0.5 V.	• Poor ground (G651) • An open in the wire
A31	PNK	Ignition switch ON (II)	Measure the voltage to ground: There should be battery voltage.	• Blown No. 3 (15 A) fuse in the driver's under-dash fuse/relay box • Faulty driver's under-dash fuse/relay box • An open in the wire
A35	BRN	Ignition switch ON (II)	Measure the voltage to ground: There should be battery voltage.	• Blown No. 5 (7.5 A) fuse in the driver's under-dash fuse/relay box • Faulty driver's under-dash fuse/relay box • An open in the wire

* 1: LX, LX PZEV, LX-P, LX-P PZEV, LX-S, LX-S PZEV
* 2: Except LX, LX PZEV, LX-P, LX-P PZEV, LX-S, LX-S PZEV

10. If multiple failures are found on more than one control unit, replace the driver's under-dash fuse/relay box (includes the driver's MICU) (see page 22-84). If input failures are related to a particular control unit, replace the control unit.

HONDA

Wiper/Washer Switch Test/Replacement

1. Remove the steering column covers (see page 20-168).

2. Disconnect the dashboard wire harness 8P connector (A) from the wiper/washer switch (B).

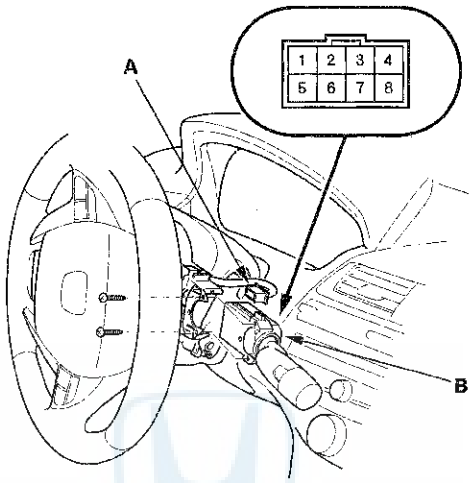

3. Remove the two screws, then slide out the wiper/washer switch.

4. Inspect the connector terminals to be sure they are all making good contact.

   - If the terminals are bent, loose or corroded, repair them as necessary, and recheck the system.
   - If the terminals look OK, go to step 5.

5. Check for continuity between the terminals in each switch position according to the table.

Position \ Terminal	1	2	3	4	5		8
OFF							
INT		○	—	—	○		
LO		○	—	○	○		
HI				○	○		
Mist ON			○	—	○		
Washer ON	○	—	—	—	○		
Intermittent dwell timer turned					○	⚡	○

6. If the continuity is not as specified, replace the switch.

7. Install the switch in the reverse order of removal.

Wiper Motor Test

4-door

1. Remove the driver's side wiper arm (see page 22-293).
2. Remove the left side cowl cover (see page 22-293).
3. Disconnect 5P connector (A) from the wiper motor (B).

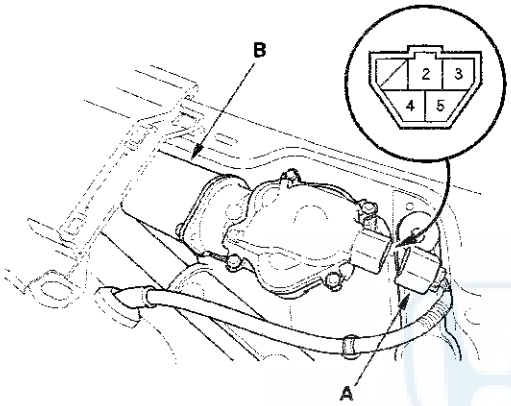

4. Test the motor by connecting battery power to the terminal No. 3 and ground to the terminal No. 2 of the wiper motor connector 5P. The motor should run at low speed.
5. Test the motor by connecting battery power to the terminal No. 5 and ground to the terminal No. 2 of the wiper motor connector 5P. The motor should run at high speed.
6. Connect an analog ohmmeter to the terminals No. 4 and No. 2, and run the motor at low or high speed. The needle of the ohmmeter should pulse.
7. If the motor does not run or fails to run smoothly, or there is no pulse, replace the motor.

2-door

1. Remove the driver's side wiper arm (see page 22-293).
2. Remove the left side cowl cover (see page 22-293).
3. Disconnect 5P connector (A) from the wiper motor (B).

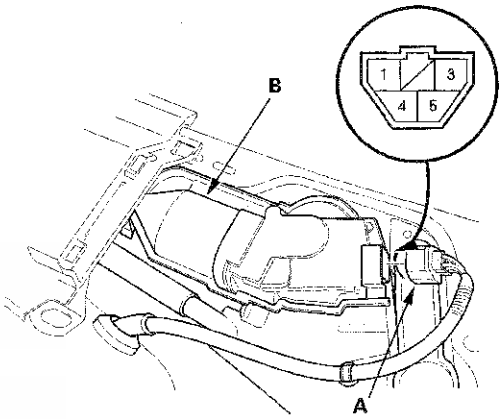

4. Test the motor by connecting battery power to the terminal No. 3 and ground to the terminal No. 4 of the wiper motor connector 5P. The motor should run at low speed.
5. Test the motor by connecting battery power to the terminal No. 5 and ground to the terminal No. 4 of the wiper motor connector 5P. The motor should run at high speed.
6. Connect an analog ohmmeter to the terminals No. 1 and No. 4, and run the motor at low or high speed. The needle of the ohmmeter should pulse.
7. If the motor does not run or fails to run smoothly, or there is no pulse, replace the motor.

Washer Motor Test

1. Remove the right inner fender (see page 20-273).
2. Disconnect the 2P connector (A) from the washer motor (B).

4-door USA models

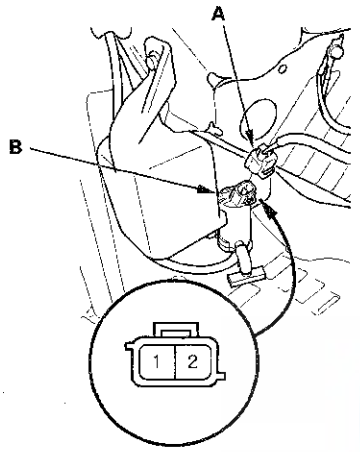

All 2-door models and 4-door Canada models

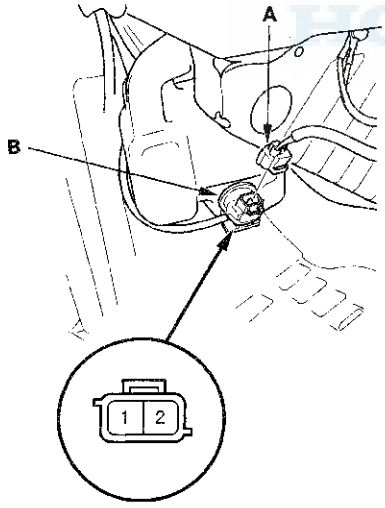

3. Test the motor by connecting battery power to the terminal No. 2 and ground to the terminal No. 1 of the washer motor. The motor should run.
   - If the motor does not run or fails to run smoothly, replace it.
   - If the motor runs smoothly, but little or no washer fluid is pumped, check for a disconnected or blocked washer hose, or a clogged washer motor outlet.

Washer Fluid Level Switch Test

Canada models

1. Remove the right inner fender (see page 20-273).
2. Disconnect the 2P connector (A) from the washer fluid level switch (B).

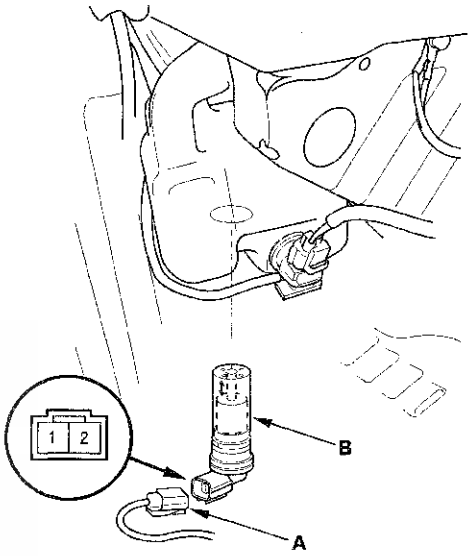

3. Remove the washer fluid level switch from the washer reservoir.

   NOTE: Fluid may flow out of the opening.

4. Check for continuity between the terminals No. 1 and No. 2 in each float position.
   - There should be continuity when the float is down.
   - There should be no continuity when the float is up.
5. If the continuity is not as specified, replace the switch.

Wiper Motor Replacement

Removal

1. Open the hood. Remove the caps (A) and nuts (B).

   NOTE: The illustration shows 4-door models.

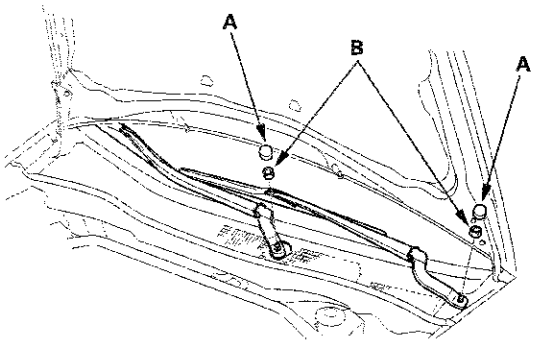

2. Close the hood, then spread protective cloths (A) on the hood to avoid scratching the hood edge.

   NOTE: The illustration shows 4-door models.

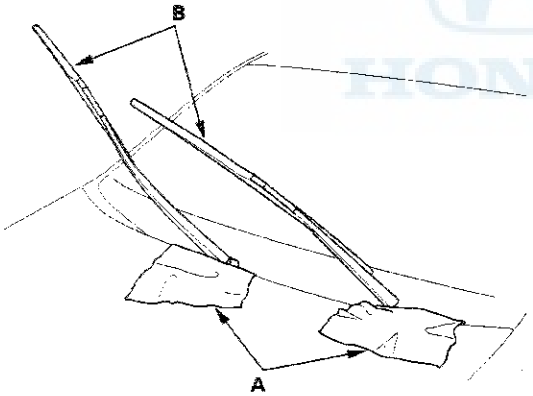

3. Raise the wiper arms (B) off the windshield, then remove the wiper arms.

4. Remove the hood seal and cowl covers (A).

   NOTE: The illustration shows 4-door models.

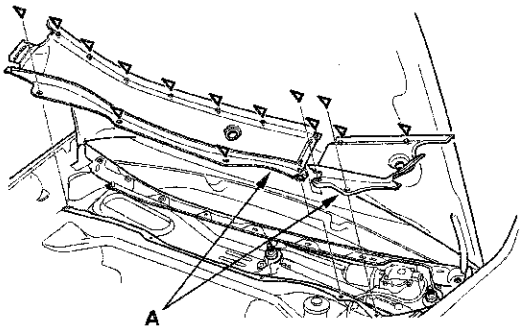

(cont'd)

Wiper Motor Replacement (cont'd)

5. Disconnect the harness clip and 5P connector (A) from the wiper motor (B).

4-door

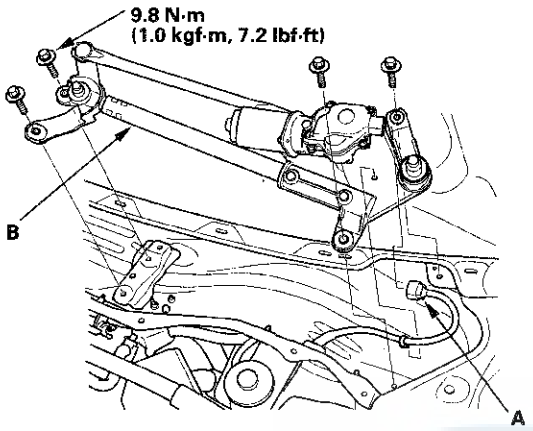

2-door

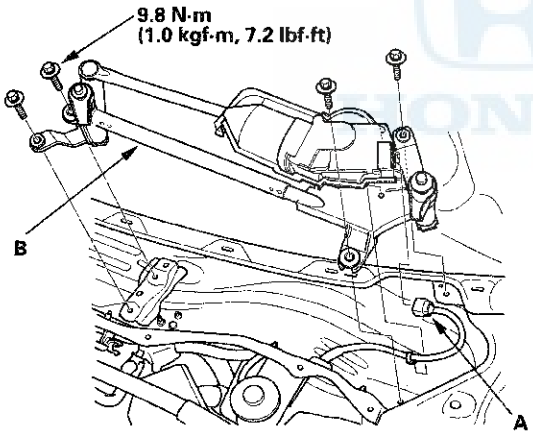

6. Remove the four bolts and wiper linkage assembly (B).

7. Separate the linkage (A) from the link (B).

4-door

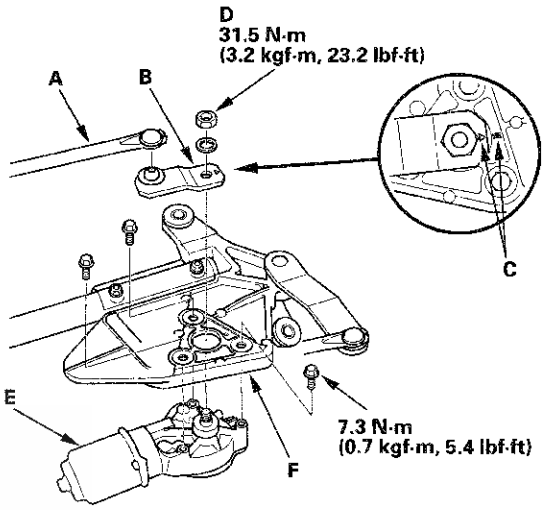

2-door

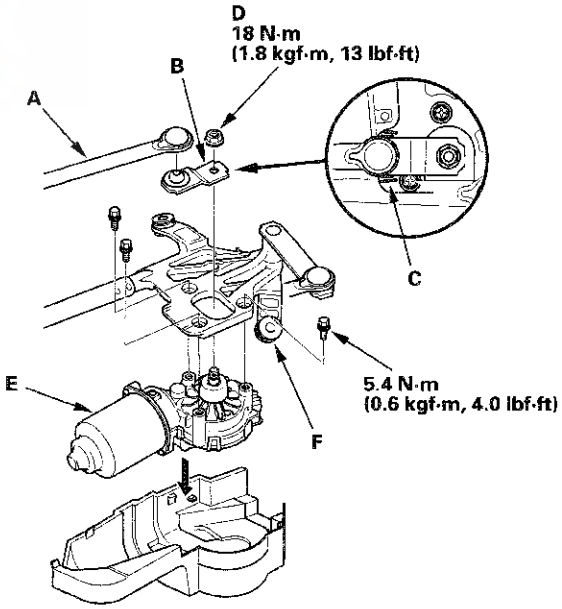

8. Note the position (C), then remove the nut (D) and the link from the wiper motor (E).

9. Remove the three bolts, and separate the wiper motor from the linkage (F).

Installation

1. Before installing the motor, connect the 5P connector to the wiper motor, and turn the wiper/washer switch ON to (LO) or (HI) position, then OFF to return the motor shaft to the park position.

   NOTE:
   - Do not use the wiper/washer switch (INT) position in this step.
   - If necessary, replace any damaged clips.
   - Apply multipurpose grease to the moving parts.

2. Install the wiper motor to the wiper linkage assembly in the reverse order of removal.

3. Install the link to the wiper motor shaft, then align the mark (A) of the link and the mark (B) of the wiper linkage assembly (4-door), or align the link (A) and the mark (B) of the wiper linkage assembly (2-door).

   4-door

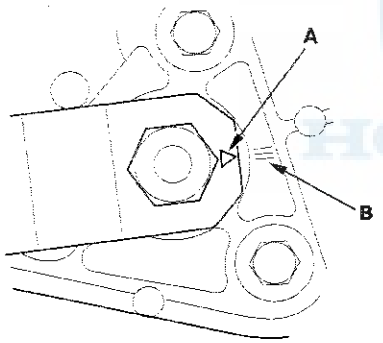

   2-door

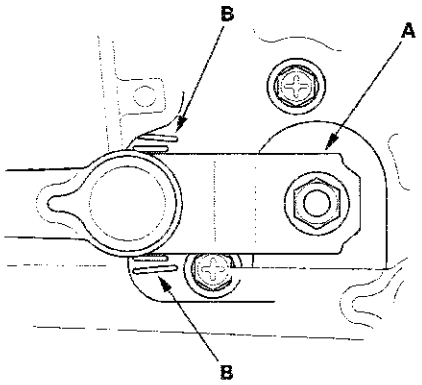

4. After installation, adjust the wiper arms (see page 22-299).

Washer Reservoir Replacement

1. Remove the right inner fender (see page 20-273).

2. Disconnect the 2P connector(s) (A) from the washer motor (B) and the washer fluid level switch (Canada models).

   Washer Reservoir Capacity:
   2.5 L (2.64 US qt): 4-door USA models
   4.5 L (4.75 US qt): All 2-door models and 4-door Canada models

   4-door USA models

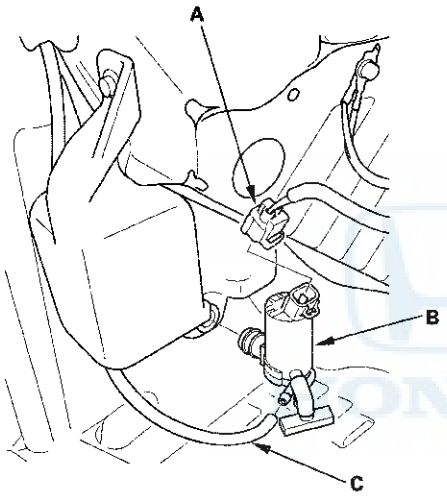

   All 2-door models and 4-door Canada models

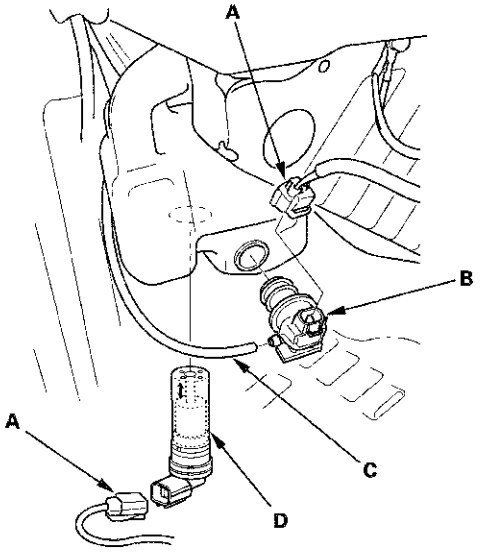

3. Disconnect the washer tube (C), then if necessary, remove the washer motor and the washer fluid level switch (D) (Canada models).

   NOTE: Fluid may flow out of the opening.

4. Remove the clip (A) and three bolts from the washer reservoir (B).

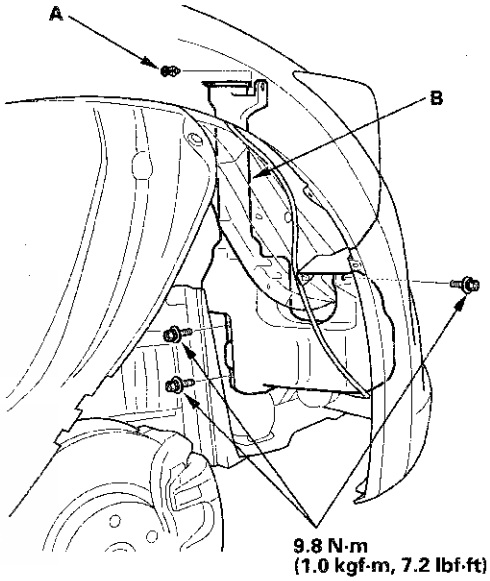

5. Install the washer reservoir in the reverse order of removal. Check the washer motor operation.

Wiper Blade Replacement

Removal

1. Lift the wiper arms off the windshield.

2. Pull up and hold the tab (A), and slide the wiper blade assembly (B) toward the tabs until it releases from the wiper arm (C).

   NOTE: The illustration shows 4-door models.

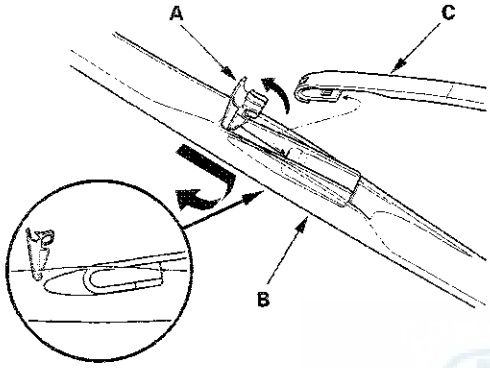

3. Pull back the end of the blade and slide out the old blade (A).

   NOTE: The illustration shows 4-door models.

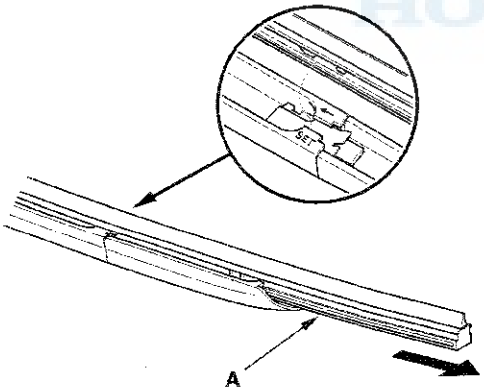

Installation

1. Align the groove (A) of the each rail (B) and a new blade (C).

4-door

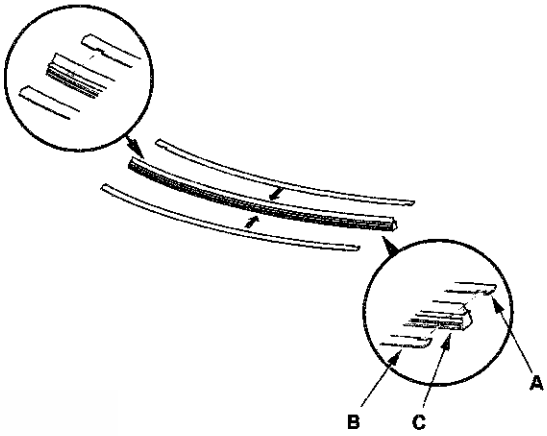

2-door

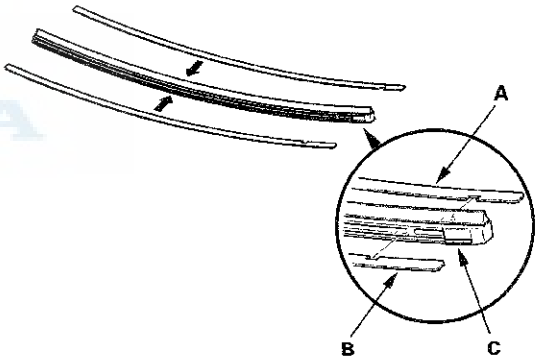

2. Install the new blade with the rails into the blade holder in the reverse order of removal.

(cont'd)

Wiper Blade Replacement (cont'd)

3. Install the wiper blade assemblies onto the wiper arms in the reverse order of removal.

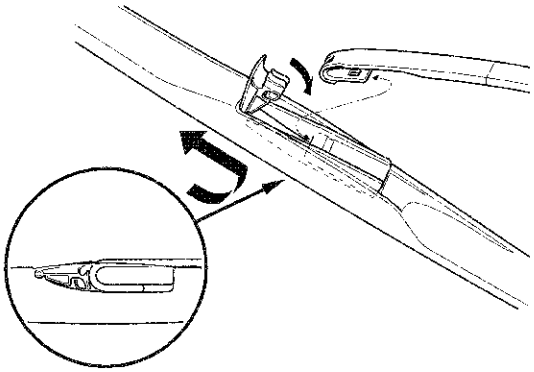

4. Test the wipers by turning the wiper switch on. If the blades slip, turn the wiper switch off and seat the wiper blade securely.

HONDA

Wiper Arm/Nozzle Adjustment

4-door

1. Turn the wiper switch ON, and then back OFF.

2. When the wiper arms stop at the park position, confirm that they are at the standard position.

   a: Position at about 1.4 in. (35.5 mm) from the top of cowl cover (A).
   b: Position at about 1.4 in. (35.5 mm) from the top of cowl cover (A).

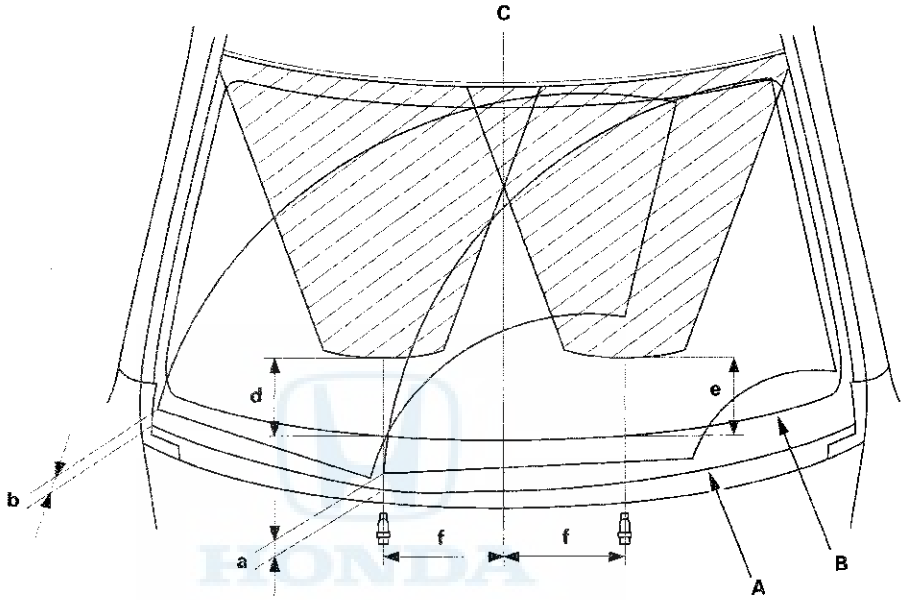

3. When you turn on the washer(s), confirm 50 % or more of the washer fluid lands within the spray area. If the spray area is not within the standard positions, adjust the nozzle(s).

   d: Position at about 6.6 in. (167.6 mm) from the top of the black ceramic area (B) at the lower windshield.
   e: Position at about 6.6 in. (167.6 mm) from the top of the black ceramic area (B) at the lower windshield.
   f: Position at about 9.8 in. (250 mm) from the windshield center line (C).

Wiper Arm/Nozzle Adjustment (cont'd)

2-door

1. Turn the wiper switch ON, and then back OFF.

2. When the wiper arms stop at the park position, confirm that they are at the standard position.

   a: Position at about 1.3 in. (32.2 mm) from the top of cowl cover (A).
   b: Position at about 1.4 in. (34.5 mm) from the top of cowl cover (A).

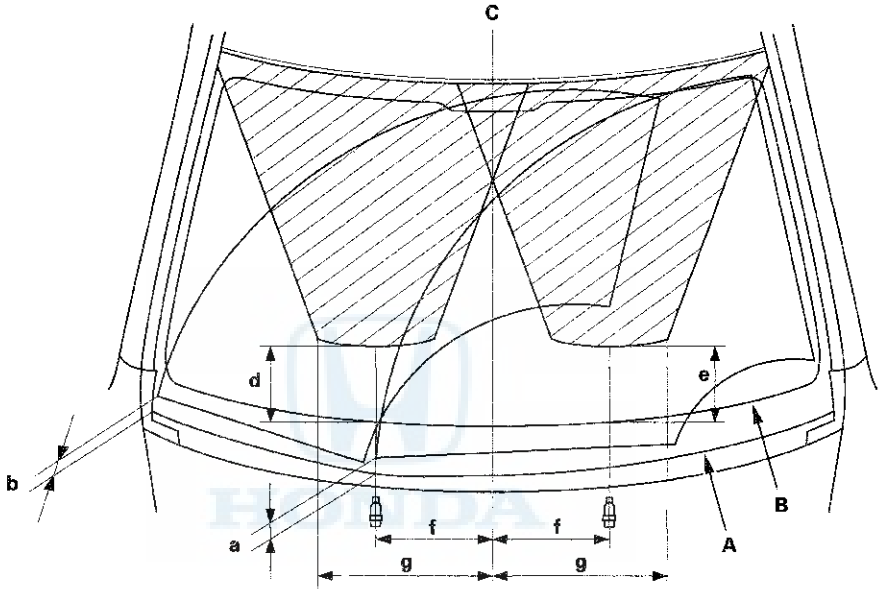

3. When you turn on the washer(s), confirm 50 % or more of the washer fluid lands within the spray area. If the spray area is not within the standard positions, adjust the nozzle(s).

   d: Position at about 5.9 in. (149 mm) from the top of the black ceramic area (B) at the lower windshield.
   e: Position at about 5.9 in. (149 mm) from the top of the black ceramic area (B) at the lower windshield.
   f: Position at about 9.8 in. (250 mm) from the windshield center line (C).
   g: Position at about 14.6 in. (370 mm) from the windshield center line (C).

Washer Tube Replacement

1. Remove the right front inner fender (see page 20-273).
2. Remove the washer nozzles and clips, then remove the tubes.

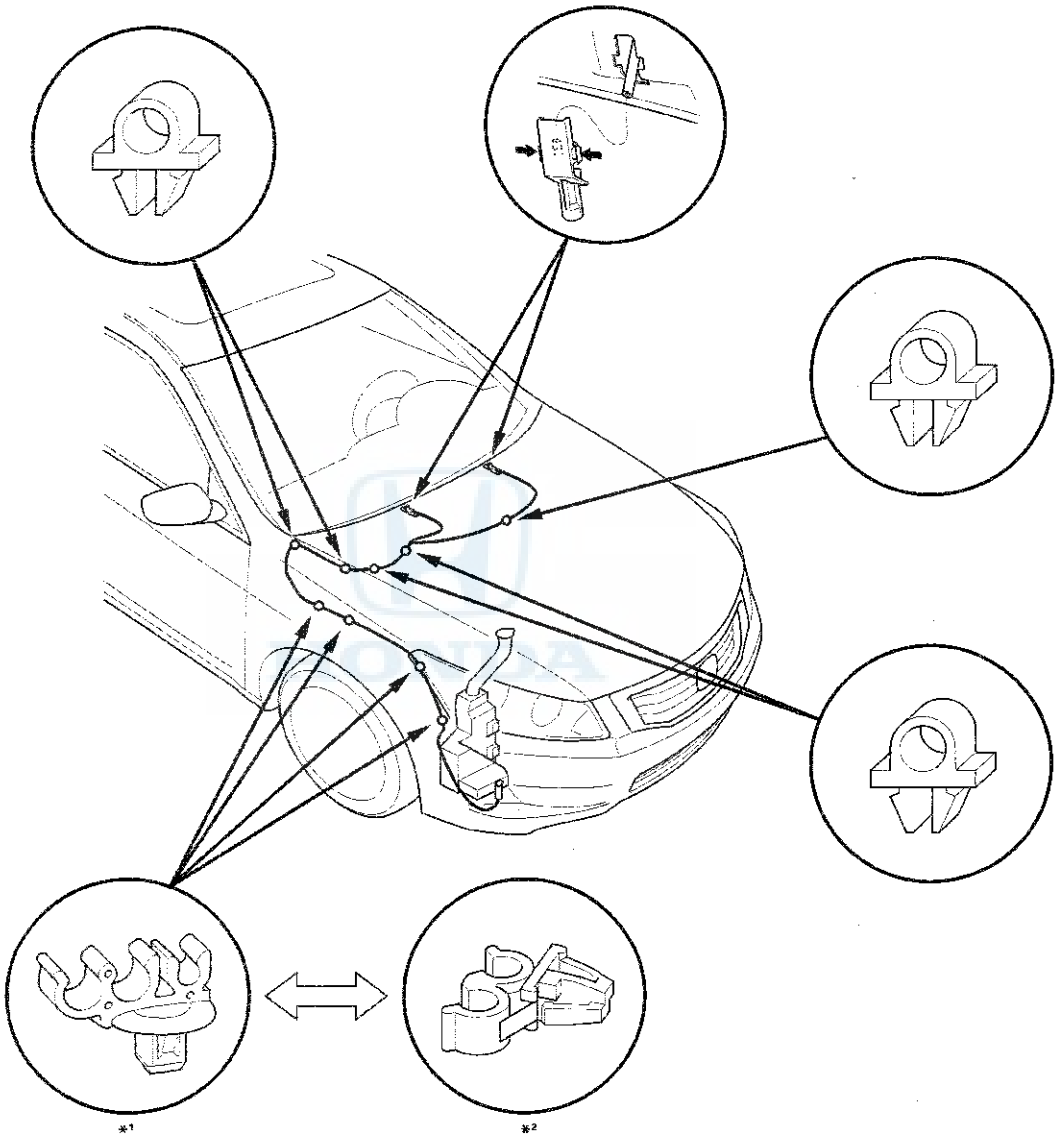

***1: 4-door USA models**
***2: All 2-door models and 4-door Canada models**

3. Install in the reverse order of removal. Take care not to pinch the washer tubes. Check the washer operation.

Component Location Index

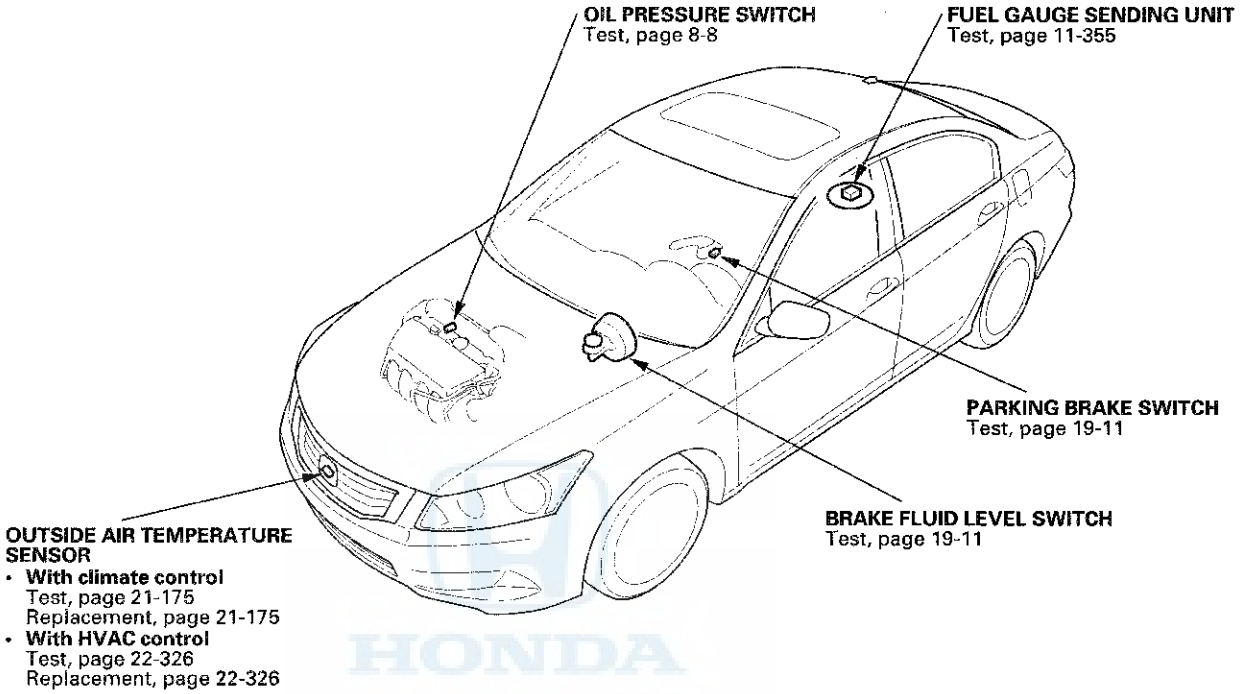

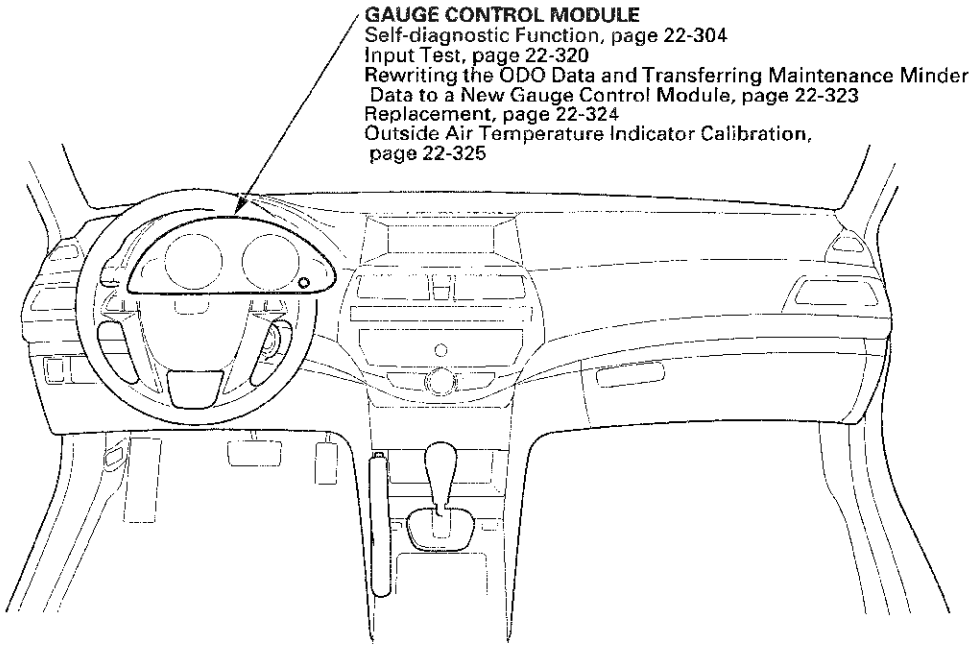

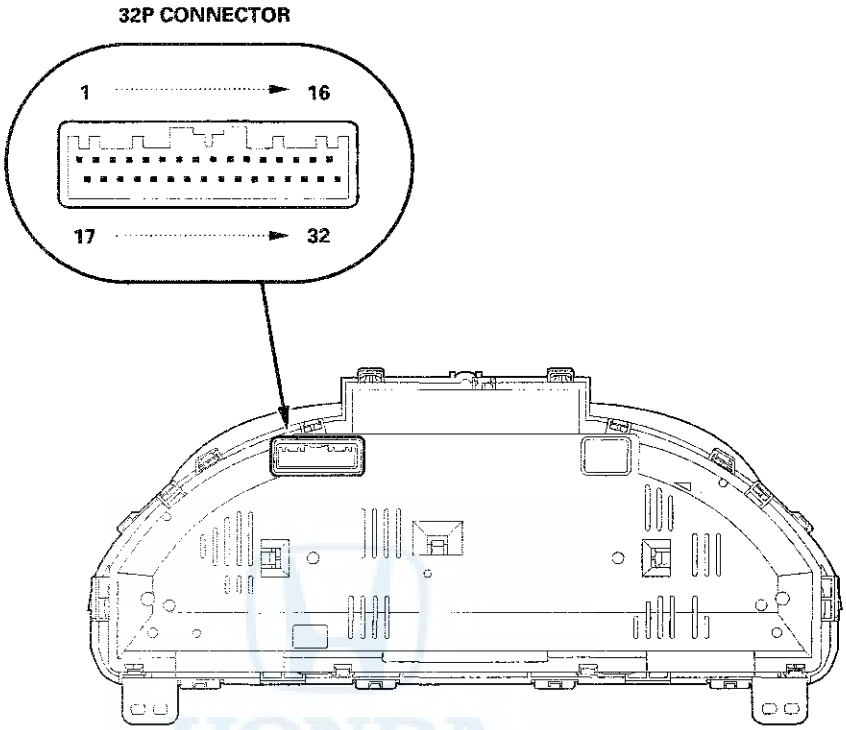
32P CONNECTOR
1
16
17
32

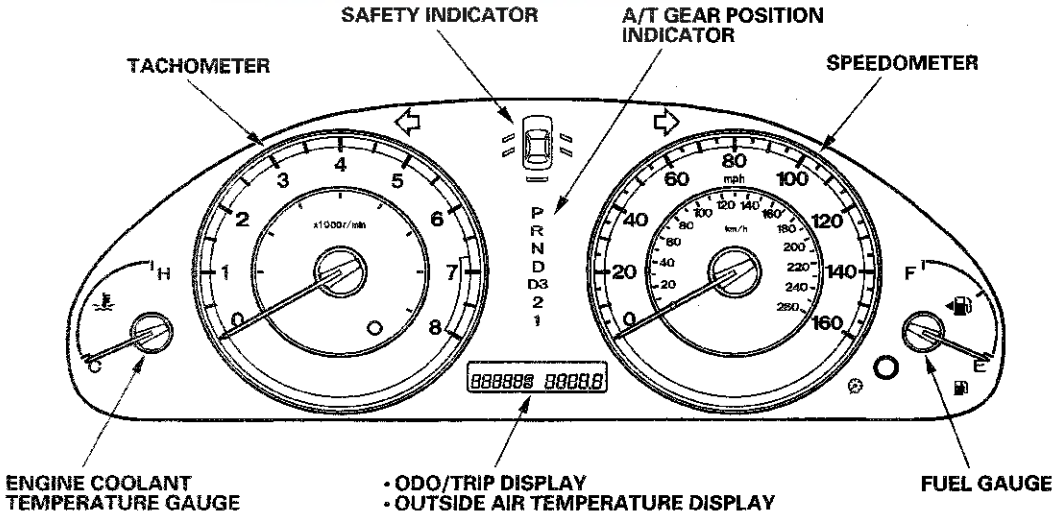
SAFETY INDICATOR
A/T GEAR POSITION INDICATOR
TACHOMETER
SPEEDOMETER
x1000r/min
mph
km/h
P
R
N
D
D3
2
1
H
C
F
E
ENGINE COOLANT TEMPERATURE GAUGE
• ODO/TRIP DISPLAY
• OUTSIDE AIR TEMPERATURE DISPLAY
FUEL GAUGE

Self-diagnostic Function

NOTE: Before testing, troubleshoot the multiplex integrated control unit first, using B-CAN System Diagnosis Test Mode A (see page 22-120).

The gauge control module has a self-diagnostic function which consists of the following checks:

- The beeper drive circuit check.
- The indicator drive circuit check.
- The switch input test.
- The LCD segments check.
- The gauges drive circuit check (Tachometer, Fuel gauge, Speedometer, Engine coolant temperature gauge.
- The communication line check (of the body-controller area network (B-CAN) communication line and the fast-controller area network (F-CAN) communication line between the gauges).

NOTE:
Indicators are also controlled via the communication line.

Entering the self-diagnostic function with the HDS

Using the HDS, select Body Electrical, Gauges, then Function Test and do the self-diagnostic function.

Entering the self-diagnostic function (manual method)

Before doing the self-diagnostic function, make sure the No. 5 (7.5 A) fuse in the driver's under-dash fuse/relay box and the No. 15 (10 A) fuse in the under-hood fuse/relay box are OK.

1. Push and hold the SEL/RESET switch button.
2. Turn the combination light switch (≡DOE) ON.
3. Turn the ignition switch to ON (II).
4. Within 5 sec., turn the combination light switch (≡DOE) OFF, then ON and OFF again.
5. Within 5 sec., release the SEL/RESET switch button, and then push and release the button three times repeatedly.

NOTE:
- While in the self-diagnostic mode, the dash lights brightness controller operates normally.
- While in the self-diagnostic mode, the SEL/RESET button is used to start the Beeper Drive Circuit Test and the Gauge Drive Circuit Check.
- If the vehicle speed exceeds 1.2 mph (2 km/h) or the ignition switch is turned to LOCK (0), the self-diagnostic mode ends.

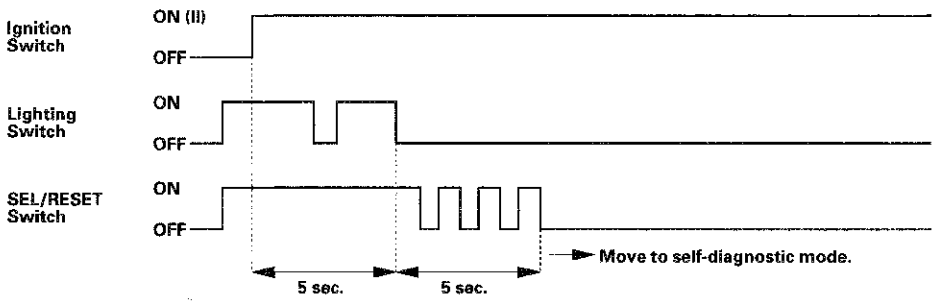

The Indicator Drive Circuit Check

When entering the self-diagnostic mode, the following indicators blink:
A/T gear position indicator, ABS indicator, brake system indicator, charging system indicator, cruise control indicator, cruise main indicator, door indicator, DRL indicator, high beam indicator, immobilizer indicator, lights-on indicator, low oil pressure indicator, low fuel indicator, low tire pressure indicator, malfunction indicator lamp (MIL), maintenance required indicator, seat belt indicator, security indicator, side airbag cutoff indicator, SRS indicator, TPMS indicator, trunk indicator, VSA activation indicator, VSA indicator, and washer fluid level indicator (Canada models).

Switch Input Check

At the initial stage of the self-diagnostic function, the beeper sounds intermittently. The beeper sounds continuously when any of the following switch inputs are switched from OFF to ON:
Cruise control master, SET, RESUME, CANCEL switches, SEL/RESET switch, parking brake switch, and VSA OFF switch.

The Beeper Drive Circuit Check

When entering the self-diagnostic mode, the beeper sounds five times.

The LCD Segment Check

When entering the self-diagnostic mode, all the segments blink five times.

The Gauge Drive Circuit Check

When entering the self-diagnostic mode, the speedometer, the tachometer, the fuel gauge, and the engine coolant temperature gauge needles sweep from the minimum position to maximum position, then return to the minimum position.

NOTE:
After the beeper stops sounding and the gauge needles return to the minimum position, pushing the SEL/RESET switch starts the Beeper Drive Circuit Check (one beep) and the Gauge Drive Circuit Check again.
The check cannot be started again until the gauge needles return to the minimum position.

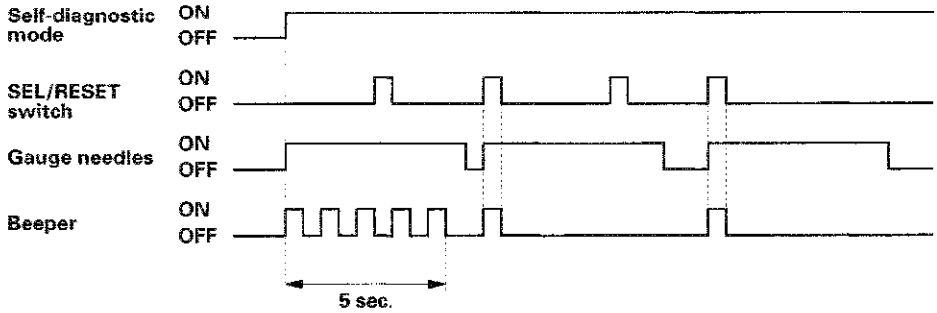

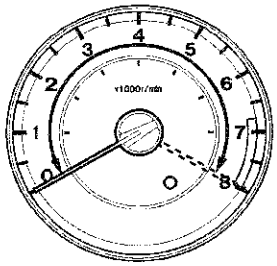

The needles sweep from the minimum position to the maximum position, then return to the minimum position.

If the needles fail to sweep, or the beeper does not sound, replace the gauge control module.

(cont'd)

Self-diagnostic Function (cont'd)

The Communication Line Check

While in the self-diagnostic mode, the Communication Line Check starts after the LCD Segments Check.
If all segments come on, the communication line is OK. If faulty, the word Error will be indicated on the odometer display followed by a number(s).

Error Code List

Error code	Type of communication line(s) error
Error 1	F-CAN communication
Error 2	B-CAN communication
Error 12	F-CAN and B-CAN communication

Example Indication

Normal (all segments come on.):

Faulty (Error 1):

- If Error 1 is indicated, there is a malfunction in the communication line between the F-CAN and the gauge control module. The B-CAN is OK at this time. Check for DTCs in the F-CAN connected units and troubleshoot any DTCs found. If no DTCs are found, go to B-CAN System Diagnosis Test Mode A (see page 22-120).
- If Error 2 is indicated, there is a malfunction in the communication line between the B-CAN and the gauge control module. The F-CAN line is OK at this time. Go to B-CAN System Diagnosis Test Mode A (see page 22-120).
- If Error 12 is indicated, there is a malfunction in the communication line between the gauge control module, the F-CAN, and the B-CAN. Check the DTCs in the F-CAN connected units and troubleshoot any DTCs found. If no DTCs are found, go to B-CAN System Diagnosis Test Mode A (see page 22-120).

Ending the self-diagnostic function

Turn the ignition switch to LOCK (0).

NOTE: If the vehicle speed exceeds 1.2 mph (2 km/h), the self-diagnostic function ends.

Circuit Diagram

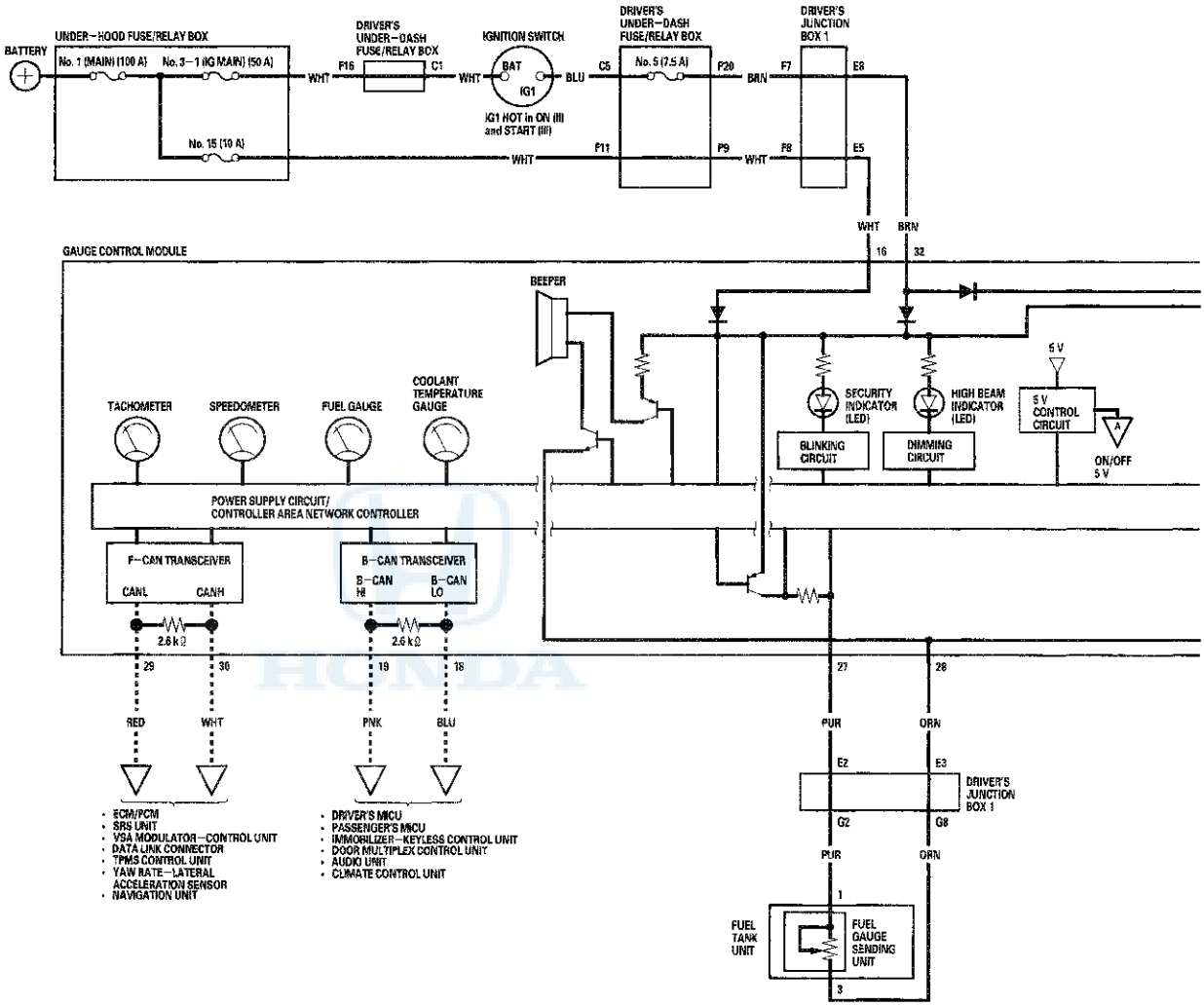

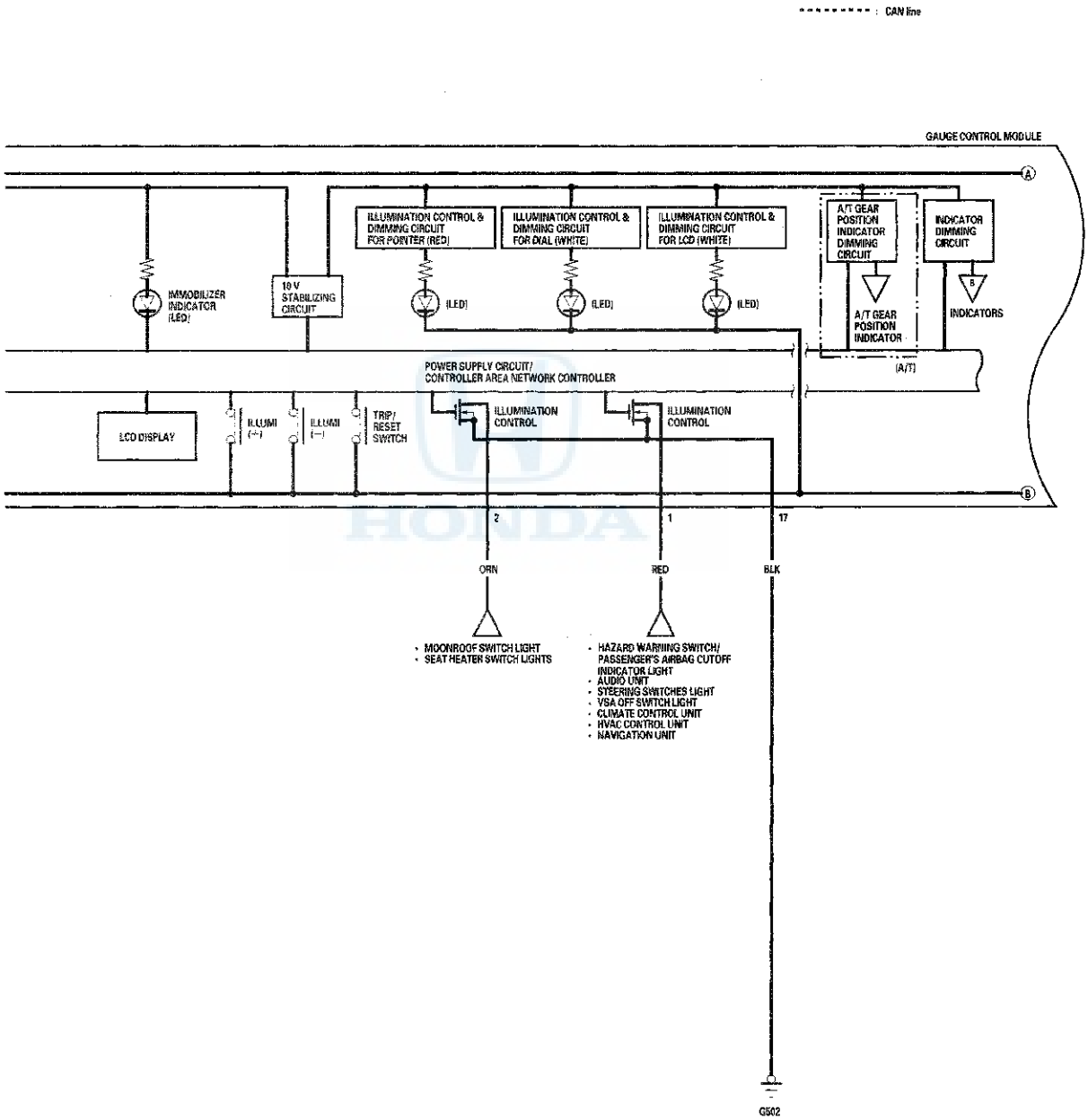
: CAN line
GAUGE CONTROL MODULE
A
B
IMMOBILIZER INDICATOR (LED)
10 V STABILIZING CIRCUIT
ILLUMINATION CONTROL & DIMMING CIRCUIT FOR POINTER (RED)
ILLUMINATION CONTROL & DIMMING CIRCUIT FOR DIAL (WHITE)
ILLUMINATION CONTROL & DIMMING CIRCUIT FOR LCD (WHITE)
(LED)
(LED)
(LED)
A/T GEAR POSITION INDICATOR DIMMING CIRCUIT
INDICATOR DIMMING CIRCUIT
A/T GEAR POSITION INDICATOR
INDICATORS
(A/T)
POWER SUPPLY CIRCUIT/ CONTROLLER AREA NETWORK CONTROLLER
LCD DISPLAY
ILLUMI (+)
ILLUMI (−)
TRIP/ RESET SWITCH
ILLUMINATION CONTROL
ILLUMINATION CONTROL
2
1
17
ORN
RED
BLK
• MOONROOF SWITCH LIGHT
• SEAT HEATER SWITCH LIGHTS
• HAZARD WARNING SWITCH/ PASSENGER'S AIRBAG CUTOFF INDICATOR LIGHT
• AUDIO UNIT
• STEERING SWITCHES LIGHT
• VSA OFF SWITCH LIGHT
• CLIMATE CONTROL UNIT
• HVAC CONTROL UNIT
• NAVIGATION UNIT
G502

(cont'd)

Circuit Diagram (cont'd)

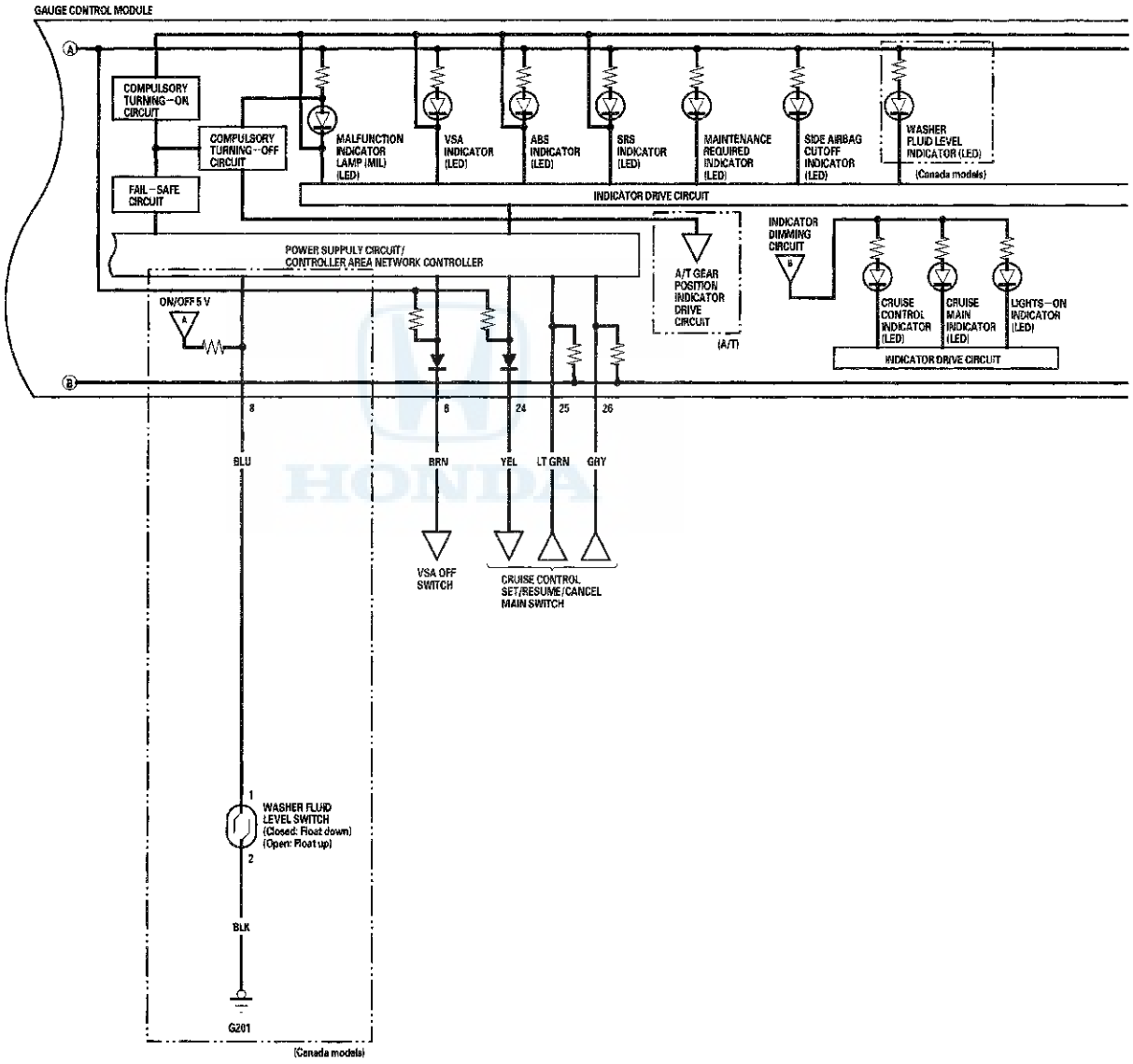

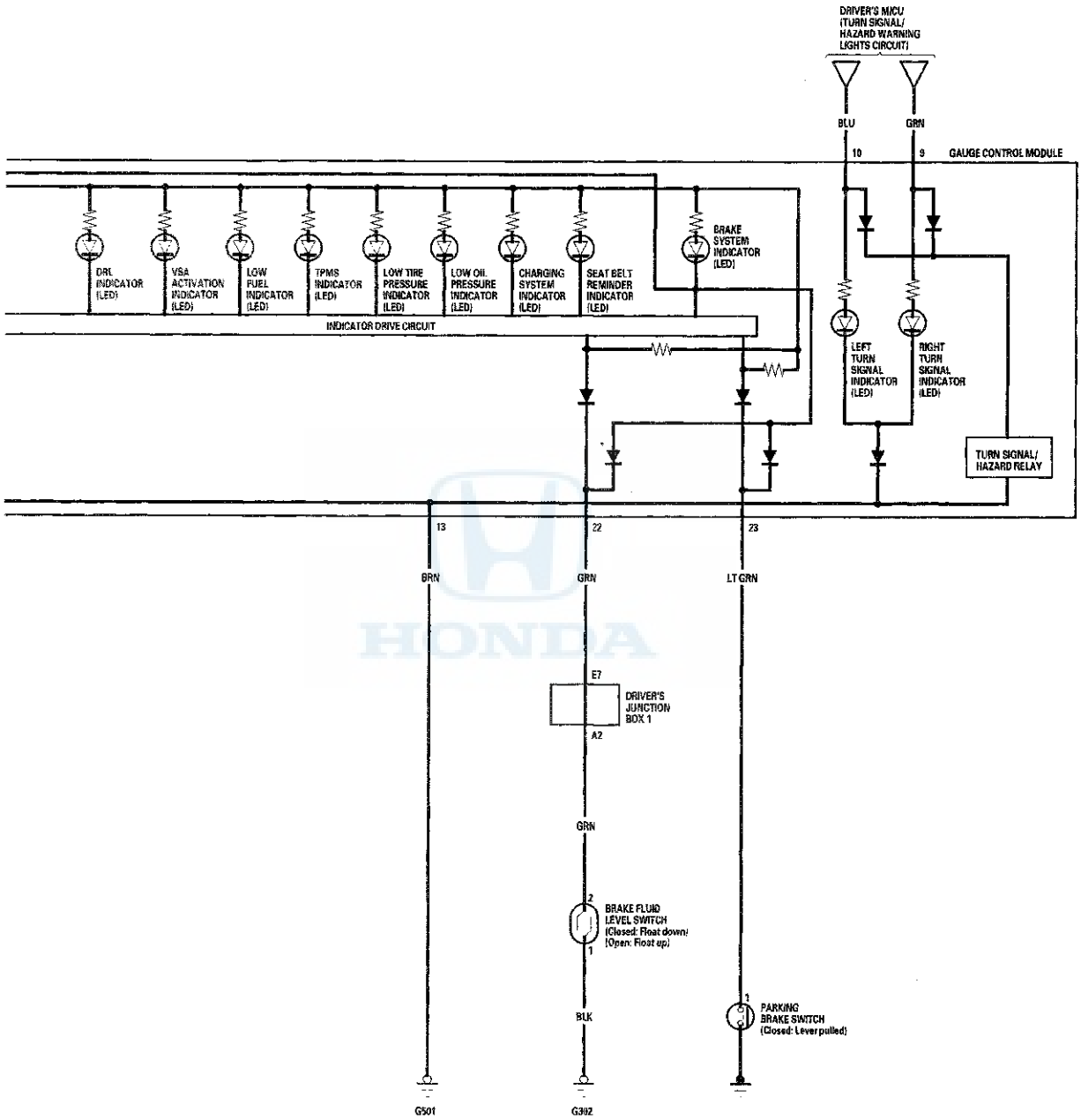
DRIVER'S MICU (TURN SIGNAL/ HAZARD WARNING LIGHTS CIRCUIT)
BLU
GRN
10
9
GAUGE CONTROL MODULE
DRL INDICATOR (LED)
VSA ACTIVATION INDICATOR (LED)
LOW FUEL INDICATOR (LED)
TPMS INDICATOR (LED)
LOW TIRE PRESSURE INDICATOR (LED)
LOW OIL PRESSURE INDICATOR (LED)
CHARGING SYSTEM INDICATOR (LED)
SEAT BELT REMINDER INDICATOR (LED)
BRAKE SYSTEM INDICATOR (LED)
INDICATOR DRIVE CIRCUIT
LEFT TURN SIGNAL INDICATOR (LED)
RIGHT TURN SIGNAL INDICATOR (LED)
TURN SIGNAL/ HAZARD RELAY
13
22
23
BRN
GRN
LT GRN
E7
DRIVER'S JUNCTION BOX 1
A2
GRN
2
BRAKE FLUID LEVEL SWITCH (Closed: Float down) (Open: Float up)
1
BLK
1
PARKING BRAKE SWITCH (Closed: Lever pulled)
G501
G302

DTC Troubleshooting

DTC B1152: Gauge Control Module (EEPROM) Error

NOTE: If you are troubleshooting multiple DTCs, be sure to follow the instructions in B-CAN System Diagnosis Test Mode A (see page 22-120).

1. Clear the DTCs with the HDS.
2. Turn the ignition switch to LOCK (0) and then back to ON (II).
3. Wait for 6 seconds or more.
4. Check for DTCs with the HDS.

   Is DTC B1152 indicated?

   YES—Replace the gauge control module (see page 22-324). ■

   NO—Intermittent failure, the system is OK at this time. ■

DTC B1175: Fuel Level Sensor (Fuel Gauge Sending Unit) Circuit Open

NOTE: If you are troubleshooting multiple DTCs, be sure to follow the instructions in B-CAN System Diagnosis Test Mode A (see page 22-120).

1. Clear the DTCs with the HDS.
2. Turn the ignition switch to LOCK (0) and then back to ON (II).
3. Check for DTCs with the HDS.

   Is DTC B1175 indicated?

   YES—Go to step 4.

   NO—Intermittent failure, the fuel level sensor circuit is OK at this time. Check for loose or poor connections. ■

4. Test the fuel gauge sending unit (see page 11-355).

   Is the fuel gauge sending unit OK?

   YES—Go to step 5.

   NO—Replace the fuel tank unit. ■

5. Turn the ignition switch to ON (II).
6. Without disconnecting the connectors, measure the voltage between the No. 27 and No. 28 terminals of the gauge control module 32P connector and the terminals No. 1 and No. 3 of the fuel tank unit 4P connector.

   Is there less than 0.5 V?

   YES—Replace the gauge control module. ■

   NO—Repair the loose connection or open in the PUR or ORN wire between the gauge control module and fuel tank unit. ■

DTC B1176: Fuel Level Sensor (Fuel Gauge Sending Unit) Circuit Short

NOTE: If you are troubleshooting multiple DTCs, be sure to follow the instructions in B-CAN System Diagnosis Test Mode A (see page 22-120).

1. Clear the DTCs with the HDS.
2. Turn the ignition switch to LOCK (0) and then back to ON (II).
3. Wait for 30 seconds.
4. Check for DTCs with the HDS.

   Is DTC B1176 indicated?

   YES—Go to step 5.

   NO—Intermittent failure, the fuel level sensor circuit is OK at this time. Check for worn/missing insulation or an internal short in the wire.■

5. Turn the ignition switch to LOCK (0).
6. Disconnect the fuel tank unit 4P connector.
7. Clear the DTCs with the HDS.
8. Turn the ignition switch to ON (II).
9. Wait for 30 seconds.
10. Check for DTCs with the HDS.

    Is DTC B1176 indicated?

    YES—Go to step 11.

    NO—Replace the fuel gauge sending unit (see page 11-351).■

11. Disconnect the gauge control module 32P connector.
12. Check for continuity between the gauge control module 32P connector terminal No. 27 and body ground.

GAUGE CONTROL MODULE 32P CONNECTOR

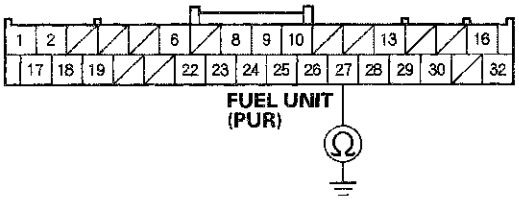

Wire side of female terminals

Is there continuity?

YES—Repair a short in the wire between the gauge control module and the fuel tank unit.■

NO—Replace the gauge control module.■

DTC Troubleshooting (cont'd)

DTC U0029: F-CAN Communication Line Error (BUS-OFF)

NOTE:
- Make sure the HDS communicates with the ECM/PCM and other vehicle systems. If it does not, go to DLC Circuit Troubleshooting (see page 11-192).
- If you are troubleshooting multiple DTCs, be sure to follow the instructions in B-CAN System Diagnosis Test Mode A (see page 22-120).

1. Clear the DTCs with the HDS.

2. Turn the ignition switch to LOCK (0) and then back to ON (II).

3. Wait for 6 seconds or more.

4. Check for DTCs with the HDS.

   Is DTC U0029 indicated?

   YES—Go to step 5.

   NO—Intermittent failure, the F-CAN communication line is OK at this time. Check for DTCs in the ECM/PCM with the HDS. If F-CAN DTCs are present, check for loose or poor connections at the gauge control module and the ECM/PCM. If the connections are good, check the battery condition and the charging system, then clear all DTCs. ■

5. Check for DTCs in the ECM/PCM with the HDS.

   Are any DTCs indicated?

   YES—Go to the indicated ECM/PCM DTC's troubleshooting. ■

   NO—Go to step 6.

6. Do the gauge control module input test.

   Are all inputs OK?

   YES—Go to step 7.

   NO—Repair the faulty input, then recheck the DTCs. ■

7. Substitute a known-good gauge control module.

8. Clear the DTCs with the HDS.

9. Turn the ignition switch to LOCK (0) and then back to ON (II).

10. Start and run the engine for at least 5 seconds, then turn the engine off.

11. Check for DTCs with the HDS.

    Is DTC U0029 indicated?

    YES—Go to step 12.

    NO—The original gauge control module is faulty; replace it. ■

12. Update the ECM/PCM if it does not have the latest software (see page 11-215), or substitute a known-good ECM/PCM (see page 11-7).

13. Check for Temporary DTCs or DTCs with the HDS.

    Is DTC U0029 indicated?

    YES—Check for poor connections or loose terminals at the gauge control module and the ECM/PCM. If the ECM/PCM was updated, substitute a known-good ECM/PCM (see page 11-7), then recheck. If the ECM/PCM was substituted, go to step 1.

    NO—If the ECM/PCM was updated, troubleshooting is complete. If the ECM/PCM was substituted, replace the original ECM/PCM (see page 11-216).

DTC U0100: Gauge Control Module Lost Communication with ECM/PCM

NOTE: If you are troubleshooting multiple DTCs, be sure to follow the instructions in B-CAN System Diagnosis Test Mode A (see page 22-120).

1. Clear the DTCs with the HDS.

2. Turn the ignition switch to LOCK (0) and then back to ON (II).

3. Start and run the engine for at least 5 seconds, then turn the engine off.

4. Check for DTCs with the HDS.

   Is DTC U0100 indicated?

   YES—Go to step 5.

   NO—Intermittent failure, the F-CAN communication line is OK at this time. Check for DTCs in the ECM/PCM with the HDS. If F-CAN DTCs are present, check for loose or poor connections at the gauge control module and the ECM/PCM. If the connections are good, check the battery condition and the charging system, then clear all DTCs. ■

5. Check for DTCs in the ECM/PCM with the HDS.

   Are any DTCs indicated?

   YES—Go to the ECM/PCM indicated DTC's troubleshooting. ■

   NO—Go to step 6.

6. Do the gauge control module input test.

   Are all inputs OK?

   YES—Go to step 7.

   NO—Repair the faulty input, then recheck the DTCs. ■

7. Substitute a known-good gauge control module.

8. Clear the DTCs with the HDS.

9. Turn the ignition switch to LOCK (0) and then back to ON (II).

10. Start and run the engine for at least 5 seconds, then turn the engine off.

11. Check for DTCs with the HDS.

    Is DTC U0100 indicated?

    YES—Replace the ECM/PCM. ■

    NO—The original gauge control module is faulty; replace it. ■

DTC Troubleshooting (cont'd)

DTC U0122: Gauge Control Module Lost Communication with VSA Modulator-Control Unit (VSA message)

NOTE: If you are troubleshooting multiple DTCs, be sure to follow the instructions in B-CAN System Diagnosis Test Mode A (see page 22-120).

1. Clear the DTCs with the HDS.
2. Turn the ignition switch to LOCK (0) and then back to ON (II).
3. Wait for 6 seconds or more.
4. Check for DTCs with the HDS.

   Is DTC U0122 indicated?

   YES—Go to step 5.

   NO—Intermittent failure, the F-CAN communication line is OK at this time. Check for DTCs in the ECM/PCM and the VSA modulator-control unit with the HDS. If F-CAN DTCs are present, check for a loose VSA ground or poor connections at the VSA modulator-control unit or gauge control module. If the connections are good, check the battery condition and the charging system, then clear all DTCs.■

5. Check for DTCs in the ECM/PCM or VSA with the HDS.

   Are any DTCs indicated?

   YES—Go to the ECM/PCM or VSA indicated DTC's, troubleshooting.■

   NO—Go to step 6.

6. Do the gauge control module input test.

   Are all inputs OK?

   YES—Go to step 7.

   NO—Repair the faulty input, then recheck the DTCs.■

7. Substitute a known-good gauge control module.
8. Clear the DTCs with the HDS.
9. Turn the ignition switch to LOCK (0) and then back to ON (II).
10. Check for DTCs with the HDS.

    Is DTC U0122 indicated?

    YES—Recheck ECM/PCM for DTCs, then recheck the VSA modulator-control unit for DTCs.■

    NO—The original gauge control module is faulty; replace it.■

DTC U0127: Gauge Control Module Lost Communication with TPMS Control Unit (TPMS message)

NOTE: If you are troubleshooting multiple DTCs, be sure to follow the instructions in B-CAN System Diagnosis Test Mode A (see page 22-120).

1. Clear the DTCs with the HDS.

2. Turn the ignition switch to LOCK (0) and then back to ON (II).

3. Wait for 6 seconds or more.

4. Check for DTCs with the HDS.

   Is DTC U0127 indicated?

   YES—Go to step 5.

   NO—Intermittent failure, the system is OK at this time. Check for loose or poor connections. ■

5. Check for TPMS DTCs with the HDS.

   Is any DTCs indicated?

   YES—Go to the indicated DTC's troubleshooting, then recheck.

   NO—Go to step 6.

6. Turn the ignition switch to LOCK (0).

7. Disconnect the gauge control module 32P connector.

8. Disconnect the TPMS control unit 20P connector.

9. Check for continuity between the gauge control module 32P connector terminals No. 29 and No. 30 and the TPMS control unit 20P connector terminals No. 1 and No. 11 respectively.

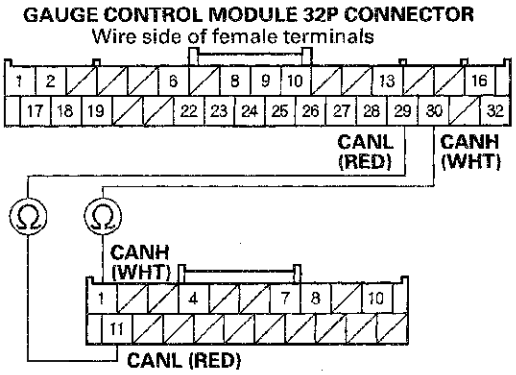

Is there continuity?

YES—Substitute a known-good TPMS control unit, and recheck. If the indication goes away, replace the original TPMS control unit. If the DTC is still present, replace the gauge control module (see page 22-324). ■

NO—Repair an open in the wire. ■

DTC Troubleshooting (cont'd)

DTC U0151: Gauge Control Module Lost Communication with SRS Unit (SRS message)

NOTE: If you are troubleshooting multiple DTCs, be sure to follow the instructions in B-CAN System Diagnosis Test Mode A (see page 22-120).

1. Clear the DTCs with the HDS.
2. Turn the ignition switch to LOCK (0) and then back to ON (II).
3. Wait for 6 seconds or more.
4. Check for DTCs with the HDS.

   Is DTC U0151 indicated?

   YES—Go to step 5.

   NO—Intermittent failure, the system is OK at this time. Check for loose or poor connections between the gauge control module and the SRS unit. ■

5. Check for SRS DTC's with the HDS.

   Is any DTCs indicated?

   YES—Go to the indicated DTC's troubleshooting, then recheck.

   NO—Go to step 6.

6. Turn the ignition switch to LOCK (0).
7. Disconnect the gauge control module 32P connector.
8. Disconnect SRS unit connector A (28P).
9. Check for continuity between the gauge control module 32P connector terminals No. 29 and No. 30 and the SRS unit connector A (39P) terminals No. 16 and No. 17 respectively.

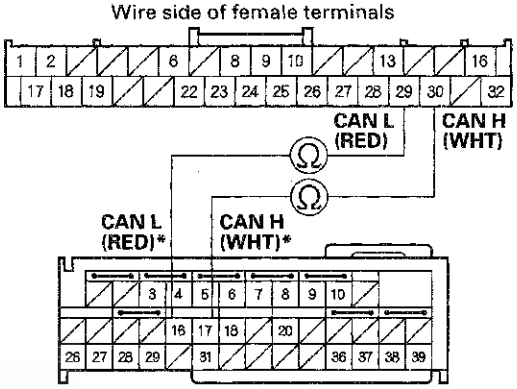

***: BLU, BRN, or GRN wire may be used at the SRS unit.**

Is there continuity?

YES—Substitute a known-good SRS unit, and recheck. If the indication goes away, replace the original SRS unit. If the DTC is still present, replace the gauge control module (see page 22-324). ■

NO—Repair an open in the wire. ■

DTC U1282: Gauge Control Module Lost Communication with Driver's MICU

NOTE: If you are troubleshooting multiple DTCs, be sure to follow the instructions in B-CAN System Diagnosis Test Mode A (see page 22-120).

1. Clear the DTCs with the HDS.
2. Turn the ignition switch to LOCK (0) and then back to ON (II).
3. Wait for 6 seconds or more.
4. Check for DTCs with the HDS.

   Is DTC U1282 indicated?

   YES—Go to the gauge control module input test, and do all power, ground, and communication input tests (see page 22-320). If the tests prove OK, replace the driver's under-dash fuse/relay box. ■

   NO—Intermittent failure, the system is OK at this time. Check for loose or poor connections at driver's under-dash fuse/relay box connector P (20P) and the related units. ■

DTC U1283: Gauge Control Module Lost Communication with Passenger's MICU

NOTE: If you are troubleshooting multiple DTCs, be sure to follow the instructions in B-CAN System Diagnosis Test Mode A (see page 22-120).

1. Clear the DTCs with the HDS.
2. Turn the ignition switch to LOCK (0) and then back to ON (II).
3. Wait for 6 seconds or more.
4. Check for DTCs with the HDS.

   Is DTC U1283 indicated?

   YES—Go to the gauge control module input test, and do all power, ground, and communication input tests (see page 22-320). If the tests prove OK, replace the driver's under-dash fuse/relay box. ■

   NO—Intermittent failure, the system is OK at this time. Check for loose or poor connections at passenger's under-dash fuse/relay box connector A (38P) and the related units. ■

HONDA

Gauge Control Module Input Test

NOTE: Before testing, do the gauge control module self-diagnosis function, and make sure the B-CAN communication lines are OK.

1. Turn the ignition switch to LOCK (0).

2. Remove the gauge control module (see page 22-324), and disconnect the 32P connector (A) from it

GAUGE CONTROL MODULE 32P CONNECTOR

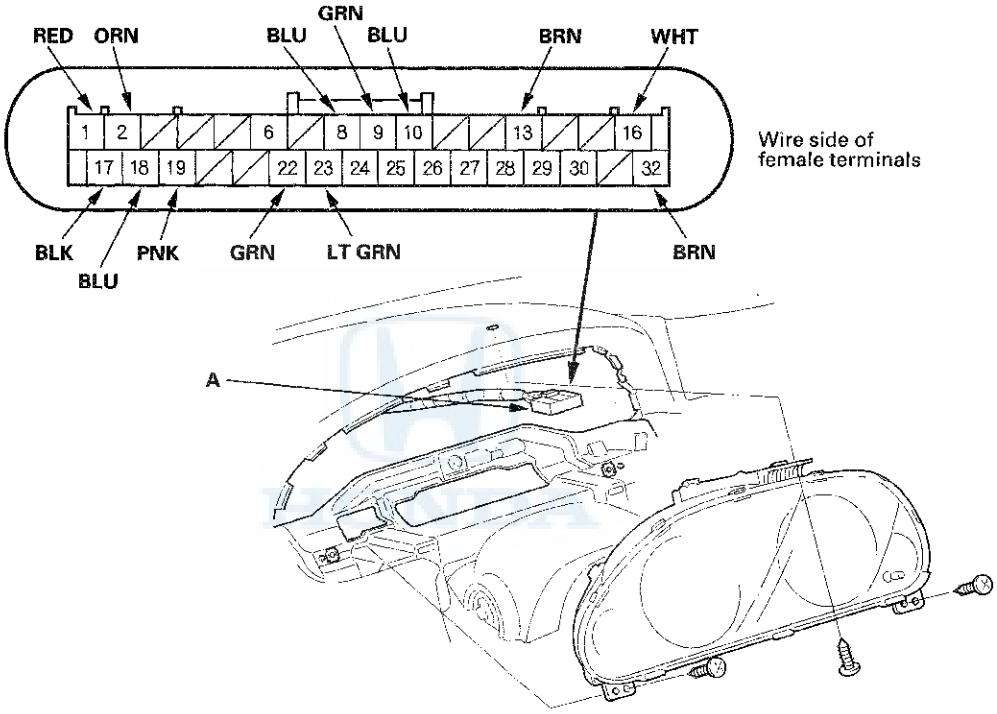

3. Inspect the connector and socket terminals to be sure they are all making good contact.

   - If the terminals are bent, loose or corroded, repair them as necessary, and recheck the system.
   - If the terminals are OK, go to step 4.

4. With the connector still disconnected, make these input tests at the connector.

- If any test indicates a problem, find and correct the cause, then recheck the system.
- If all the input tests prove OK, go to step 5.

Cavity	Wire	Test condition	Test: Desired result	Possible cause if desired result is not obtained
1	RED	Combination light switch ON	Attach to ground: The dash lights, audio unit light, and climate (or HVAC) control unit light should come on full bright.	• Faulty LEDs and bulbs • An open in the wire
2	ORN	Combination light switch ON	Attach to ground: The moonroof switch light and seat heater switch lights should come on full bright.	• Faulty LEDs and bulbs • An open in the wire
9	GRN	Ignition switch ON (II), turn signal switch in RIGHT	Measure the voltage to ground: There should be battery voltage when the lights are flashing.	• Faulty driver's MICU • Faulty combination light switch • An open in the wire
10	BLU	Ignition switch ON (II), turn signal switch in LEFT	Measure the voltage to ground: There should be battery voltage when the lights are flashing.	• Faulty driver's MICU • Faulty combination light switch • An open in the wire
18	BLU	Disconnect the driver's under-dash fuse/relay box connector P (20P)	Check for continuity between the terminal No. 18 and the driver's under-dash fuse/relay box connector P (20P) terminal No. 5: There should be continuity.	An open in the wire
			Check for continuity to ground: There should be no continuity.	A short in the wire
19	PNK	Disconnect the driver's under-dash fuse/relay box connector P (20P)	Check for continuity between the terminal No. 19 and the driver's under-dash fuse/relay box connector P (20P) terminal No. 6: There should be continuity.	An open in the wire
			Check for continuity to ground: There should be no continuity.	A short in the wire

(cont'd)

Gauge Control Module Input Test (cont'd)

5. Reconnect the 32P connector to the gauge control module, and make these input tests at the connector.

- If any test indicates a problem, find and correct the cause, then recheck the system.
- If the input test proves OK, the gauge control module must be faulty; replace it (see page 22-324).

Cavity	Wire	Test condition	Test: Desired result	Possible cause if desired result is not obtained
13	BRN	Under all conditions	Measure the voltage to ground: There should be less than 0.5 V.	• Poor ground (G501) • An open in the wire
17	BLK	Under all conditions	Measure the voltage to ground: There should be less than 0.5 V.	• Poor ground (G502) • An open in the wire
16	WHT	Under all conditions	Measure the voltage to ground: There should be battery voltage.	• Blown No. 15 (10 A) fuse in the under-dash fuse/relay box • An open in the wire
32	BRN	Ignition switch ON (II)	Measure the voltage to ground: There should be battery voltage.	• Blown No. 5 (7.5 A) fuse in the under-hood fuse/relay box • An open in the wire
8*	BLU	Ignition switch ON (II), washer fluid is half or more in the washer reservoir	Measure the voltage to ground: There should be 5 V or more.	• Faulty washer fluid level switch • A short to ground in the wire
		Ignition switch ON (II), washer fluid is empty in the washer reservoir	Measure the voltage to ground: There should be less than 1 V.	• Poor ground (G201) • Faulty washer fluid level switch • An open in the wire
22	GRN	Ignition switch ON (II), brake fluid is full level in the reservoir	Measure the voltage to ground: There should be 5 V or more.	• Faulty brake fluid level switch • A short to ground in the wire
		Ignition switch ON (II), brake fluid is lower level in the reservoir	Measure the voltage to ground: There should be less than 1 V.	• Poor ground (G302) • Faulty brake fluid level switch • An open in the wire
23	LT GRN	Ignition switch ON (II), parking brake lever pulled	Measure the voltage to ground: There should be less than 1 V.	• Faulty parking brake switch • An open in the wire
		Ignition switch ON (II), parking brake lever released	Measure the voltage to ground: There should be 5 V more.	• Faulty parking brake switch • A short to ground in the wire

*: Canada models

Rewriting the ODO Data and Transferring the Maintenance Minder Data to a New Gauge Control Module

NOTE:
- Obtain a new gauge control module before starting the rewriting process.
- Rewriting is not possible on a gauge control module that will not communicate with the HDS.
- Make sure that the HDS shows the correct VIN for the vehicle you are working on.
- Once you have started this procedure, you must complete it before removing the HDS from the DLC.
- Connect a battery jumper box (not a battery charger) to insure that correct battery voltage will be maintained.

1. Before replacing the gauge control module, connect the HDS.
2. Select GAUGES from the BODY ELECTRICAL system select menu with the HDS.
3. Select Gauge Control Module Replacement (ODO Rewrite) from the ADJUSTMENT menu, and follow the instructions on the display to retrieve the ODO value and the Maintenance Minder Information.
4. Replace the gauge control module.
5. Follow the instructions on the display to write the new ODO value and Maintenance Minder Data to the new gauge control module. If the data transfer fails, refer to the instructions below to release the locked ODO value.

Release Locked odometer mileage to the original gauge control module.

If, after you attempt to transfer mileage, the odometer display has dashes (———), is garbled, or shows an incorrect value, the original gauge control module needs to be unlocked and restored to its original state:

1. Confirm that you have the latest HDS version of software.
2. Make sure that the HDS shows the correct VIN for the vehicle you are working on.
3. With the ignition switch in LOCK (0), reconnect the original gauge control module.
4. Completely re-boot the HDS.
5. Clear any stored DTCs.
6. Navigate to BODY ELECTRIC/GAUGES/ ADJUSTMENT/INSTRUMENT PANEL REPLACEMENT.
7. Select 3. RELEASING LOCKED ODO VALUE.
8. Follow the prompts and the odometer mileage will be restored.
9. Start over and make sure the screen prompts are followed.

Gauge Control Module Replacement

NOTE: Before replacing the gauge control module, retrieve the ODO value and the maintenance minder information from the gauge control module with the HDS (see page 22-323).

1. Remove the instrument visor (see page 20-152).
2. Remove the three screws from the gauge control module (A).

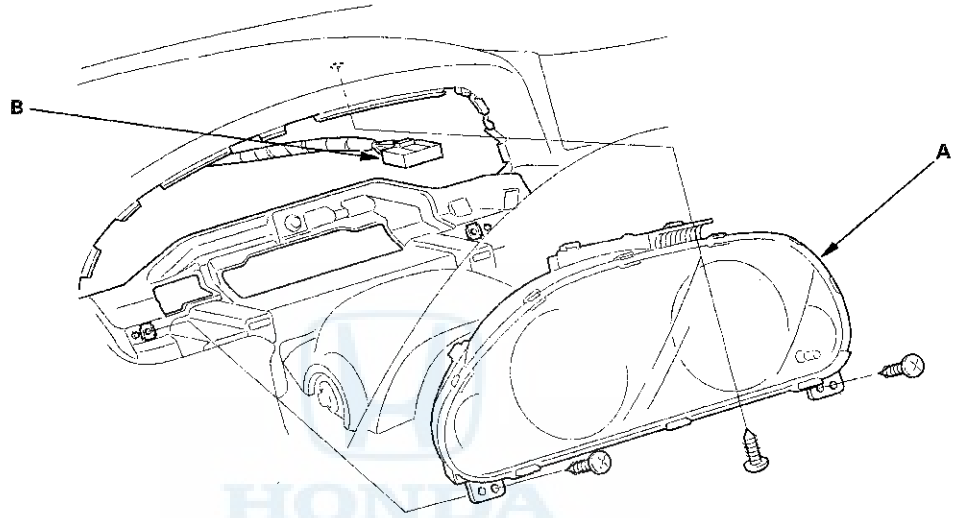

3. Disconnect the 32P connector (B) from the gauge control module.
4. Install the gauge control module in the reverse order of removal.
5. Write the ODO value and maintenance minder information to the new gauge control module (see page 22-323).

Outside Air Temperature Indicator Calibration

NOTE: To test the outside air temperature sensor (see page 21-175).

Description

The outside air temperature sensor is located behind the center of the front bumper. The gauge control module uses measurements from this sensor to display the outside air temperature.
Because of the location of the sensor, it may be affected by heat reflection from the road, engine and radiator heat, or hot exhaust from surrounding traffic.
These conditions can heat soak the outside air temperature sensor and cause inaccurate readings.
Logic has been written into the gauge control module to help prevent abnormal or fluctuating outside air temperature indicator readings.

Outside Air Temperature Indicator Logic

Initial outside air temperature indication after the ignition switch is turned to ON (II).
If the engine coolant temperature is 140 °F (60 °C) or higher when the ignition switch is turned to ON (II), the outside air temperature indicated the last time the key was turned off will be displayed regardless of the current temperature measured by the outside air temperature sensor.

If the engine coolant temperature is 139 °F (59 °C) or lower when the ignition switch is turned to ON (II), the current temperature measured by the outside air temperature sensor will be indicated.

Update to the outside air temperature indicator while driving

If the temperature measured by the outside air temperature sensor is greater than the temperature on the outside air temperature indicator, the outside temperature indicator will increase by 1 °F (1 °C) per minute after the vehicle speed is greater than 19 mph (30 km/h) for more than 1 minute and 30 seconds. It will continue to increase until the current outside air temperature is indicated. So, the first change to the outside air temperature indicator is 1 minute and 30 seconds after the vehicle speed is greater than 19 mph (30 km/h). If the vehicle speed drops below 19 mph (30 km/h), the indicator will not update again until the vehicle speed is increased to 19 mph (30 km/h) or more for more than 1 minute and 30 seconds again.

If the outside air temperature is less than 140 °F (60 °C), the temperature increases 1 °F (1 °C) every 2 seconds until the current outside air temperature is displayed.

If the outside air temperature is less than the indicated temperature, the temperature will decrease 1 °F (1 °C) every 2 seconds until the current outside air temperature is indicated regardless of vehicle speed.

Troubleshooting

If the indicator displays "— — —" for more than 2 seconds after selecting the outside air temperature display mode, check the climate control system or multiplex integrated control system for DTCs (see B-CAN System Diagnosis Test Mode A) (see page 22-120).

Calibration

The outside air temperature indicator's displayed temperature can be recalibrated ±5 °F or ±3 °C to meet the customer's expectations.

Outside Air Temperature Sensor Test

1. Remove the outside air temperature sensor (see page 22-326).

2. Dip the sensor in ice water, and measure the resistance. Then pour warm water on the sensor, and check for a change in resistance.

3. Compare the resistance reading between the terminals No. 1 and No. 2 of the outside air temperature sensor with the specifications shown in the graph; the resistance should be within the specifications.

OUTSIDE AIR TEMPERATURE SENSOR

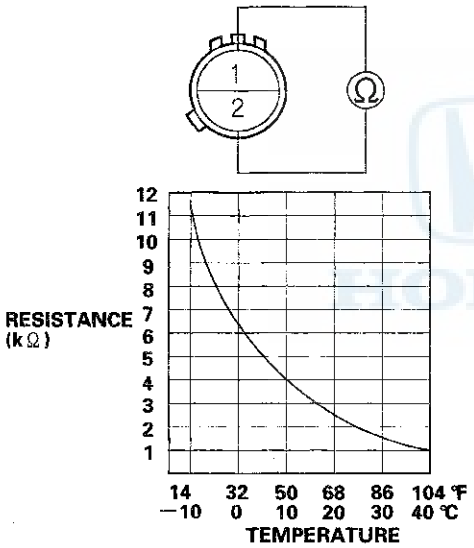

4. If the resistance is not as specified, replace the outside air temperature sensor (see page 22-326).

Outside Air Temperature Sensor Replacement

1. Disconnect the 2P connector (A) from the outside air temperature sensor (B).

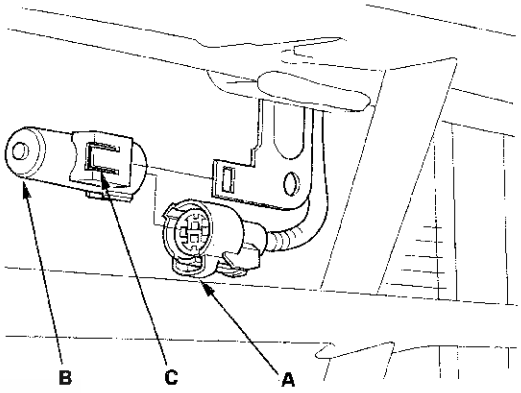

2. Lift the tab (C) to release the lock, then remove the outside air temperature sensor from the front bumper.

3. Install the sensor in the reverse order of removal.

Component Location Index

4-door

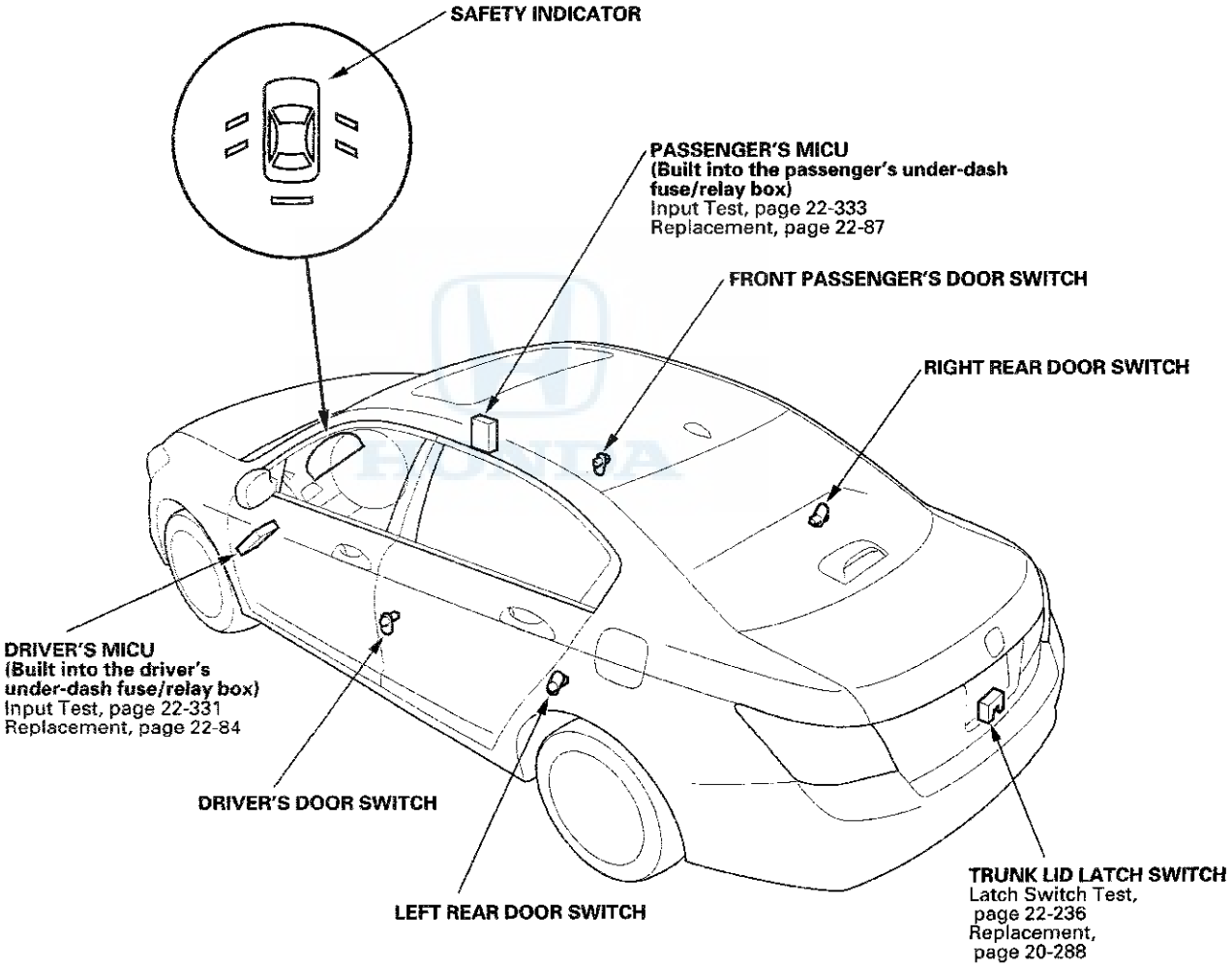

Component Location Index (cont'd)

2-door

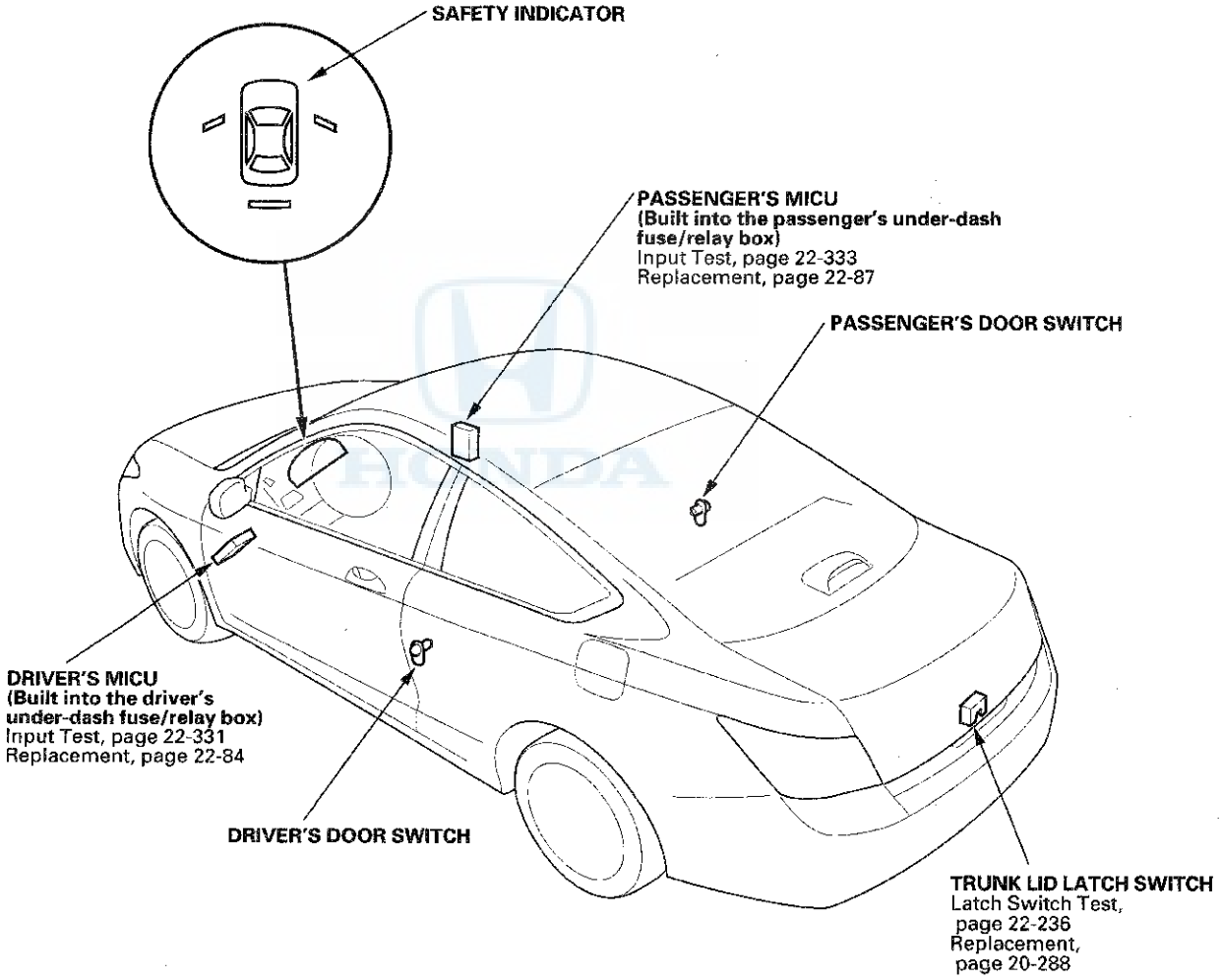

Circuit Diagram

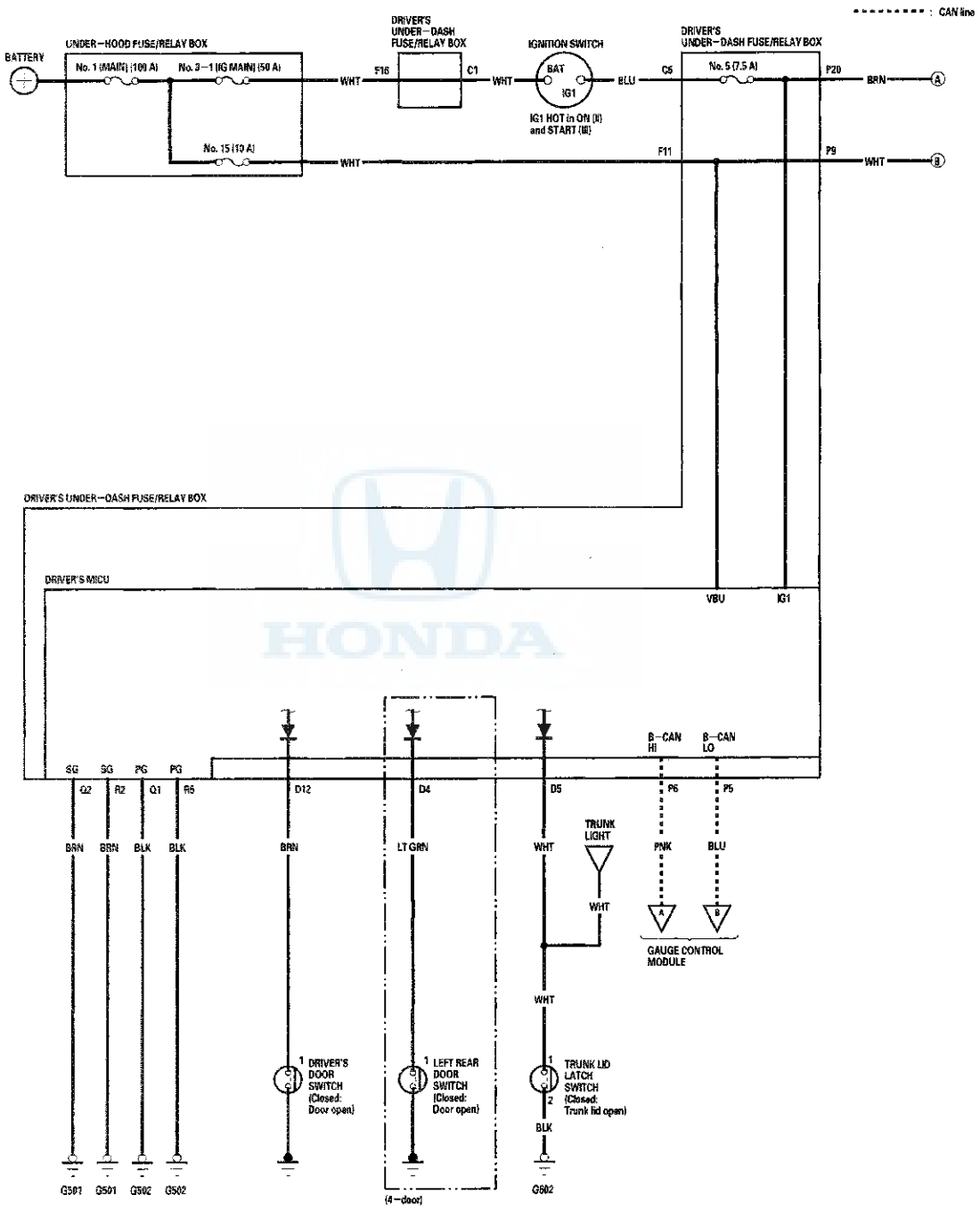

(cont'd)

Circuit Diagram (cont'd)

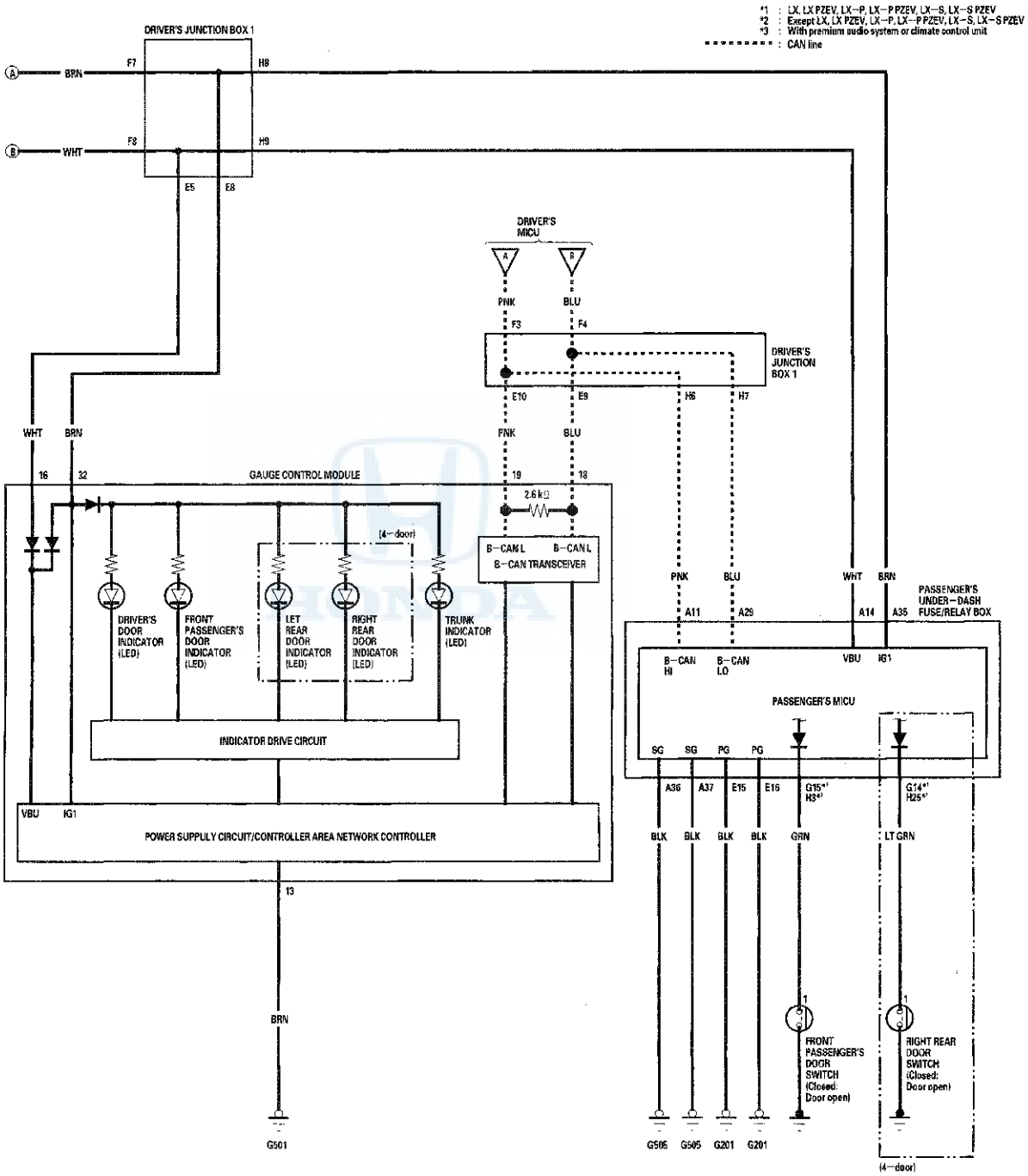

MICU Input Test

NOTE:
- Before testing, troubleshoot the multiplex integrated control unit first, using B-CAN System Diagnosis Test Mode A (see page 22-120).
- Before testing, do the gauge control module self-diagnosis function (see page 22-304), and make sure the safety indicator LEDs and B-CAN communication line are OK.

Driver's MICU

1. Turn the ignition switch to LOCK (0), and remove the driver's dashboard lower cover (see page 20-153).

2. Disconnect driver's under-dash fuse/relay box connectors D, Q, and R.

   NOTE: All connector views are wire side of female terminals.

CONNECTOR D (16P)

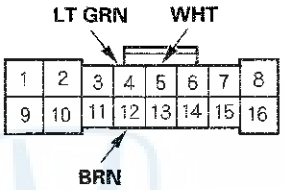

CONNECTOR Q (20P)

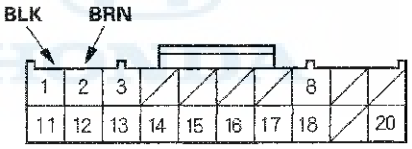

CONNECTOR R (24P)

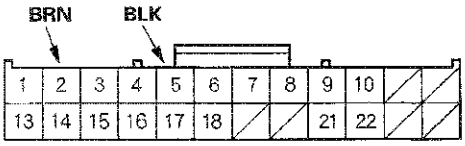

3. Inspect the connector and socket terminals to be sure they are all making good contact.

   - If the terminals are bent, loose or corroded, repair them as necessary and recheck the system.
   - If the terminals look OK, go to step 4.

(cont'd)

MICU Input Test (cont'd)

4. Reconnect the connectors to the driver's under-dash fuse/relay box, and make these input tests at the connector.

   - If any test indicates a problem, find and correct the cause, then recheck the system.
   - If all the input tests prove OK, go to step 5.

Cavity	Wire	Test condition	Test: Desired result	Possible cause if result is not obtained
Q1	BLK	Under all conditions	Measure the voltage to ground: There should be less than 0.5 V.	• Poor ground (G502) • An open in the wire
Q2	BRN	Under all conditions	Measure the voltage to ground: There should be less than 0.5 V.	• Poor ground (G501) • An open in the wire
R2	BRN	Under all conditions	Measure the voltage to ground: There should be less than 0.5 V.	• Poor ground (G501) • An open in the wire
R5	BLK	Under all conditions	Measure the voltage to ground: There should be less than 0.5 V.	• Poor ground (G502) • An open in the wire
D4 (4-door)	LT GRN	Left rear door open	Measure the voltage to ground: There should be less than 1 V.	• Faulty left rear door switch • An open in the wire
		Left rear door closed	Measure the voltage to ground: There should be more than 5 V.	• Faulty left rear door switch • A short to ground in the wire
D5	WHT	Trunk lid open (Remove the trunk light bulb)	Measure the voltage to ground: There should be less than 1 V.	• Faulty trunk lid latch switch • An open in the wire • Poor ground (G602)
		Trunk lid closed (Remove the trunk light bulb)	Measure the voltage to ground: There should be more than 5 V.	• Faulty trunk lid latch switch • A short to ground in the wire
D12	BRN	Driver's door open	Measure the voltage to ground: There should be less than 1 V.	• Faulty driver's door switch • An open in the wire
		Driver's door closed	Measure the voltage to ground: There should be more than 5 V.	• Faulty driver's door switch • A short to ground in the wire

Passenger's MICU

5. Turn the ignition switch to LOCK (0), and remove the right kick panel.

   - 2-door (see page 20-97)
   - 4-door (see page 20-99)

6. Disconnect passenger's under-dash fuse/relay box connectors A, E, and G*1 (or H*2).
   * 1: LX, LX PZEV, LX-P, LX-P PZEV, LX-S, LX-S PZEV
   * 2: Except LX, LX PZEV, LX-P, LX-P PZEV, LX-S, LX-S PZEV

   NOTE: All connector views are wire side of female terminals.

CONNECTOR A (38P)

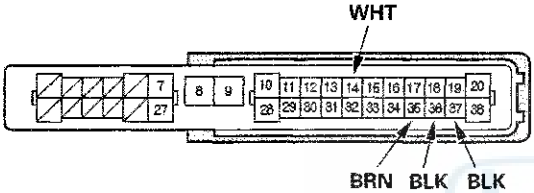

CONNECTOR G (16P)
(LX, LX PZEV, LX-P, LX-P PZEV, LX-S, LX-S PZEV)

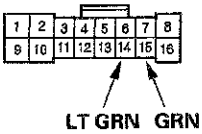

CONNECTOR E (18P)

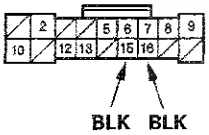

CONNECTOR H (38P)
(Except LX, LX PZEV, LX-P, LX-P PZEV, LX-S, LX-S PZEV)

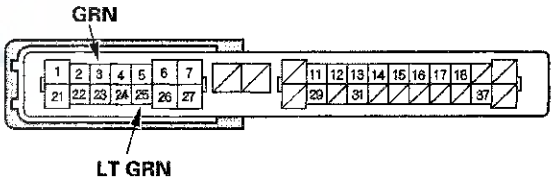

7. Inspect the connector and socket terminals to be sure they are all making good contact.

   - If the terminals are bent, loose or corroded, repair them as necessary and recheck the system.
   - If the terminals look OK, go to step 8.

(cont'd)

MICU Input Test (cont'd)

8. Reconnect the connectors to the passenger's under-dash fuse/relay box, and make these input tests at the connectors.

   - If any test indicates a problem, find and correct the cause, then recheck the system.
   - If all the input tests prove OK, go to step 9.

Cavity	Wire	Test condition	Test: Desired result	Possible cause if result is not obtained
A36	BLK	Under all conditions	Measure the voltage to ground: There should be less than 0.5 V.	• Poor ground (G505) • An open in the wire
A37	BLK	Under all conditions	Measure the voltage to ground: There should be less than 0.5 V.	• Poor ground (G505) • An open in the wire
E15	BLK	Under all conditions	Measure the voltage to ground: There should be less than 0.5 V.	• Poor ground (G201) • An open in the wire
E16	BLK	Under all conditions	Measure the voltage to ground: There should be less than 0.5 V.	• Poor ground (G201) • An open in the wire
A14	WHT	Under all conditions	Measure the voltage to ground: There should be battery voltage.	• Blown No. 15 (10 A) fuse in the under-hood fuse/relay box • Faulty under-dash fuse/relay box • An open in the wire
A35	BRN	Ignition switch ON (II)	Measure the voltage to ground: There should be battery voltage.	• Blown No. 5 (7.5 A) fuse in the driver's under-dash fuse/relay box • Faulty under-dash fuse/relay box • An open in the wire
G14*1 (4-door) H25*2 (4-door)	LT GRN	Right rear door open	Measure the voltage to ground: There should be less than 1 V.	• Faulty right rear door switch • An open in the wire
		Right rear door closed	Measure the voltage to ground: There should be more than 5 V.	• Faulty right rear door switch • A short to ground in the wire
G15*1 or H3*2	GRN	Front passenger's door open	Measure the voltage to ground: There should be less than 1 V.	• Faulty front passenger's door switch • An open in the wire
		Front passenger's door closed	Measure the voltage to ground: There should be more than 5 V.	• Faulty front passenger's door switch • A short to ground in the wire

* 1: LX, LX PZEV, LX-P, LX-P PZEV, LX-S, LX-S PZEV
* 2: Except LX, LX PZEV, LX-P, LX-P PZEV, LX-S, LX-S PZEV

9. If multiple failures are found on more than one control unit, replace the driver's under-dash fuse/relay box (includes the driver's MICU) (see page 22-84). If input failures are related to a particular control unit, replace the control unit.

Component Location Index

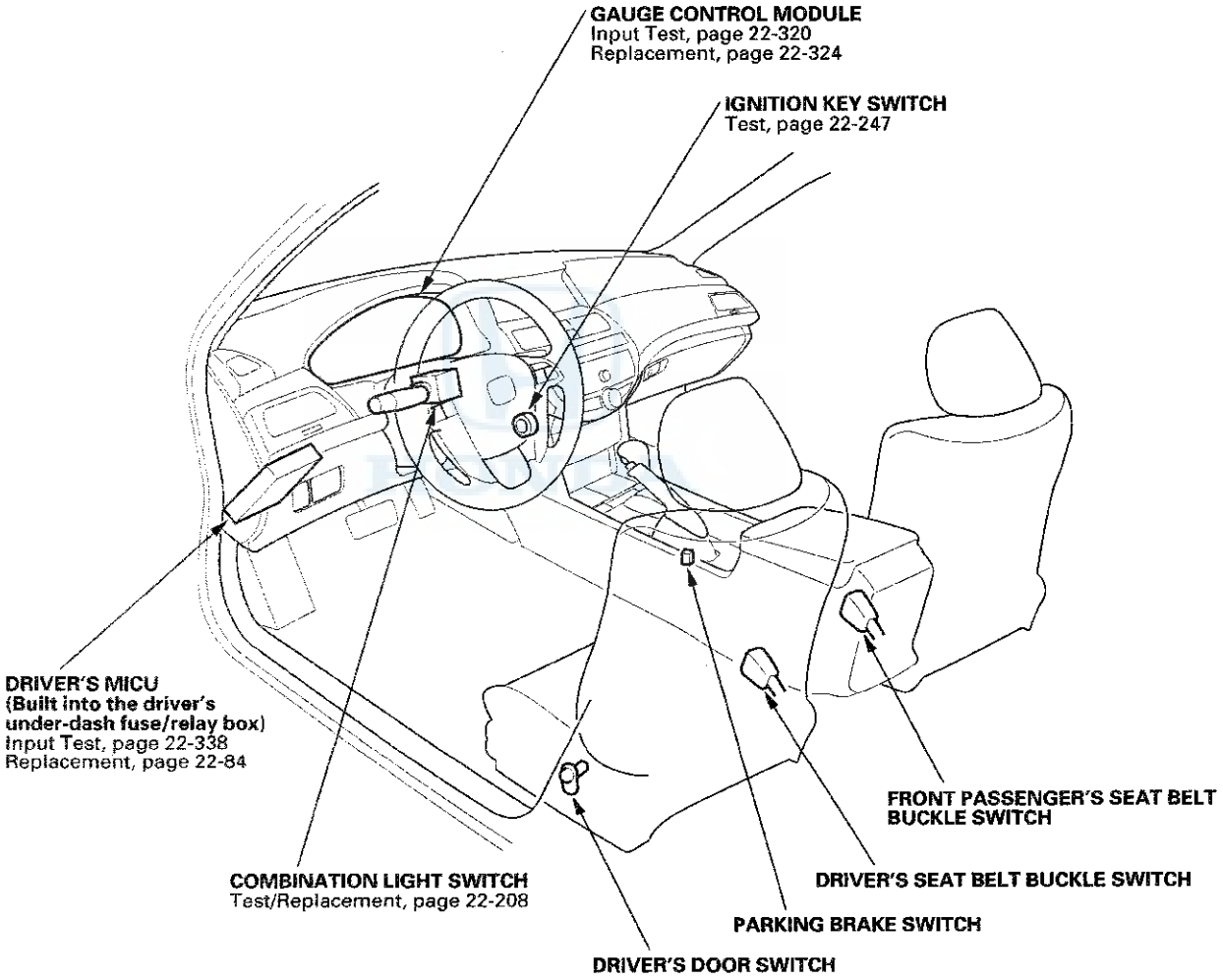

Circuit Diagram

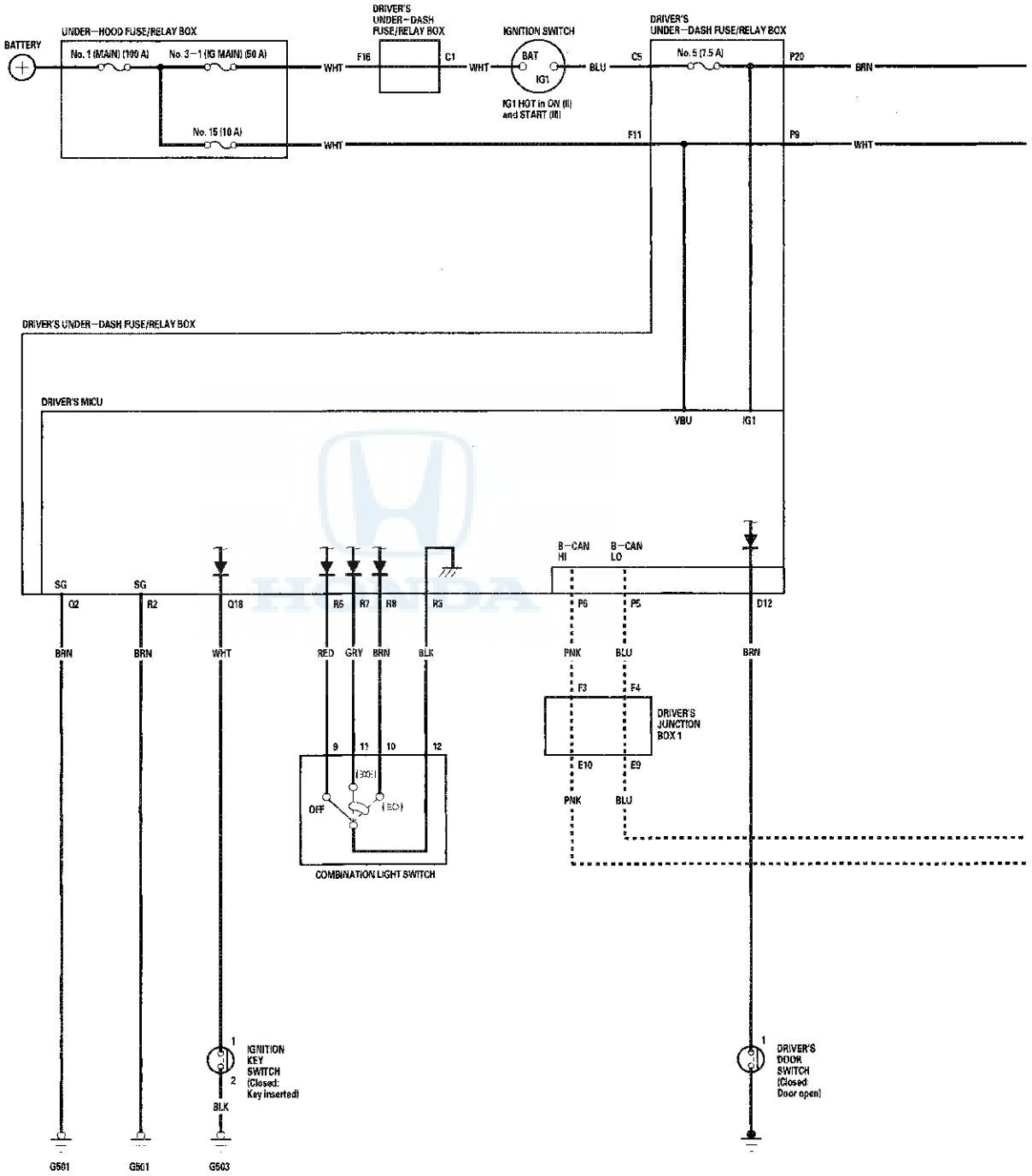

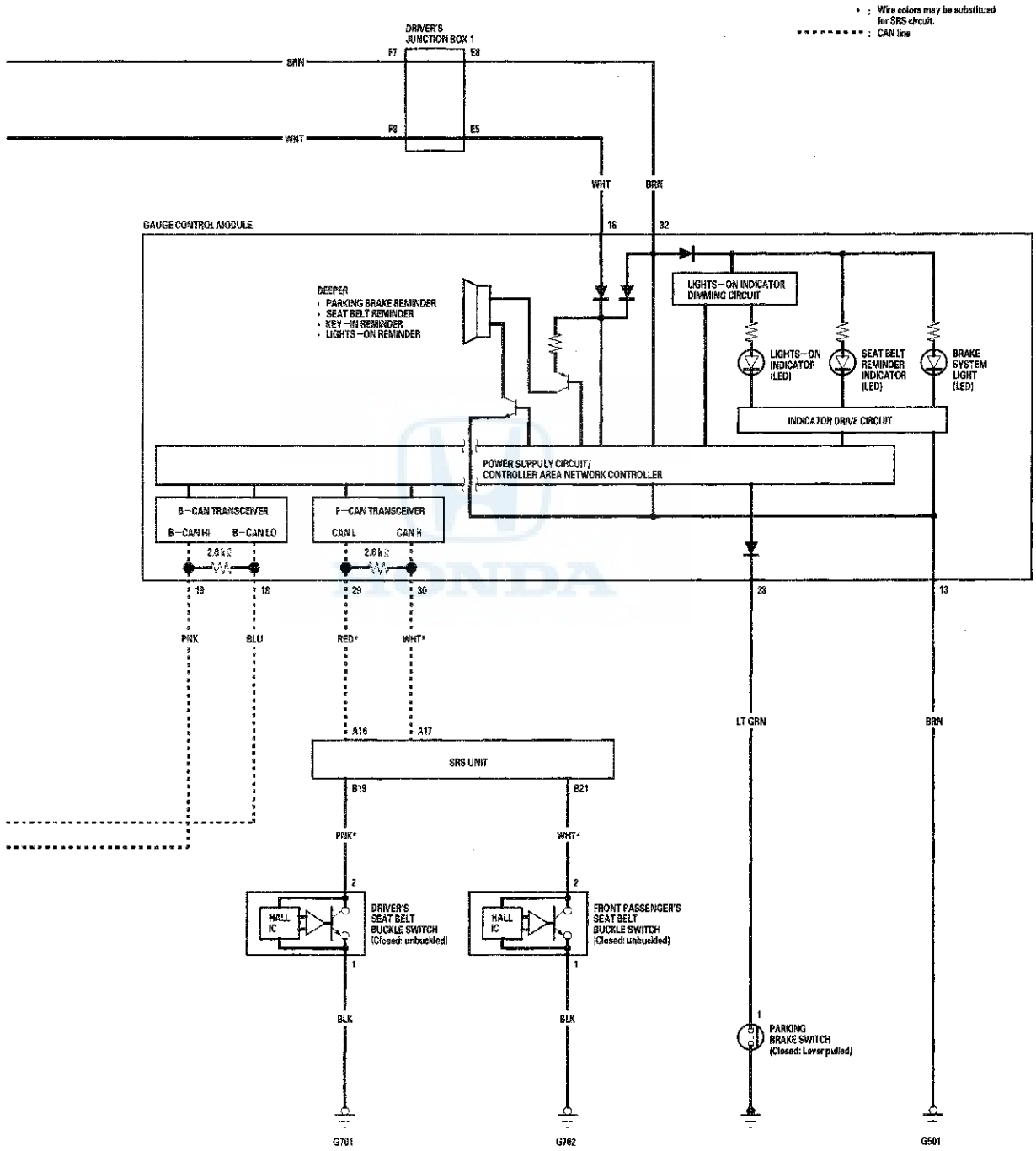
* : Wire colors may be substituted for SRS circuit.
: CAN line
DRIVER'S JUNCTION BOX 1
F7
E8
F6
E5
BRN
WHT
WHT
BRN
16
32
GAUGE CONTROL MODULE
BEEPER
• PARKING BRAKE REMINDER
• SEAT BELT REMINDER
• KEY –IN REMINDER
• LIGHTS –ON REMINDER
LIGHTS–ON INDICATOR DIMMING CIRCUIT
LIGHTS–ON INDICATOR (LED)
SEAT BELT REMINDER INDICATOR (LED)
BRAKE SYSTEM LIGHT (LED)
INDICATOR DRIVE CIRCUIT
POWER SUPPLY CIRCUIT/ CONTROLLER AREA NETWORK CONTROLLER
B–CAN TRANSCEIVER
B–CAN HI
B–CAN LO
F–CAN TRANSCEIVER
CAN L
CAN H
2.6kΩ
2.6kΩ
19
18
29
30
23
13
PNK
BLU
RED*
WHT*
LT GRN
BRN
A16
A17
SRS UNIT
B19
B21
PNK*
WHT*
2
2
HALL IC
HALL IC
DRIVER'S SEAT BELT BUCKLE SWITCH (Closed: unbuckled)
FRONT PASSENGER'S SEAT BELT BUCKLE SWITCH (Closed: unbuckled)
1
1
BLK
BLK
1
PARKING BRAKE SWITCH (Closed: Lever pulled)
G701
G702
G501

Control Unit Input Test

NOTE: Before testing, troubleshoot the multiplex integrated control unit first, using B-CAN System Diagnosis Test Mode A (see page 22-120).

Driver's MICU

1. Turn the ignition switch to LOCK (0), and remove the driver's dashboard lower cover (see page 20-153).
2. Disconnect driver's under-dash fuse/relay box connectors D, Q, and R.

   NOTE: All connector views are wire side of female terminals.

CONNECTOR D (16P)

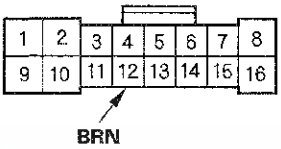

CONNECTOR Q (20P)

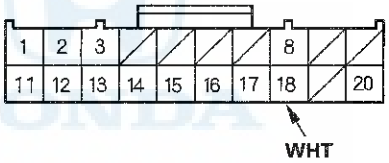

CONNECTOR R (24P)

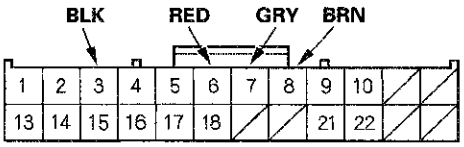

3. Inspect the connector and socket terminals to be sure they are all making good contact.
   - If the terminals are bent, loose or corroded, repair them as necessary and recheck the system.
   - If the terminals are OK, go to step 4.

4. Reconnect the connectors, turn the ignition switch to ON (II), and make these input tests at the connectors.

- If any test indicates a problem, find and correct the cause, then recheck the system.
- If all the input tests prove OK, go to step 5.

Cavity	Wire	Test condition	Test: Desired result	Possible cause if result is not obtained
D12	BRN	Driver's door open	Measure the voltage to ground: There should be less than 1 V.	• Faulty driver's door switch • An open in the wire
		Driver's door closed	Measure the voltage to ground: There should be 5 V or more.	• Faulty driver's door switch • A short to ground in the wire
Q18	WHT	Ignition key inserted into the ignition switch	Measure the voltage to ground: There should be less than 1 V.	• Poor ground (G503) • Faulty ignition key switch • An open in the wire
		Ignition switch in LOCK (0) position and ignition key removed from the ignition switch	Measure the voltage to ground: There should be 5 V or more.	• Faulty ignition key switch • A short to ground in the wire
R6 · R3	RED · BLK	Combination light switch OFF	Measure the voltage between terminals R6 and R3: There should be less than 1 V.	• Faulty combination light switch • An open in the wire
		Combination light switch in any other position than OFF	Measure the voltage between terminals R6 and R3: There should be 5 V or more.	• Faulty combination light switch • A short to ground in the wire
R7 · R3	GRY · BLK	Combination light switch (PARKING position) ON	Measure the voltage between terminals R7 and R3: There should be less than 1 V.	• Faulty combination light switch • An open in the wire
		Combination light switch OFF	Measure the voltage between terminals R7 and R3: There should be 5 V or more.	• Faulty combination light switch • A short to ground in the wire
R8 · R3	BRN · BLK	Combination light switch (Headlight position) ON	Measure the voltage between terminals R8 and R3: There should be less than 1 V.	• Faulty combination light switch • An open in the wire
		Combination light switch OFF	Measure the voltage between terminals R8 and R3: here should be 5 V or more.	• Faulty combination light switch • A short to ground in the wire

(cont'd)

Control Unit Input Test (cont'd)

Gauge Control Module

5. Turn the ignition switch to LOCK (0).
6. Remove the gauge control module (see page 22-324), and disconnect the 32P connector from it.

GAUGE CONTROL MODULE 32P CONNECTOR

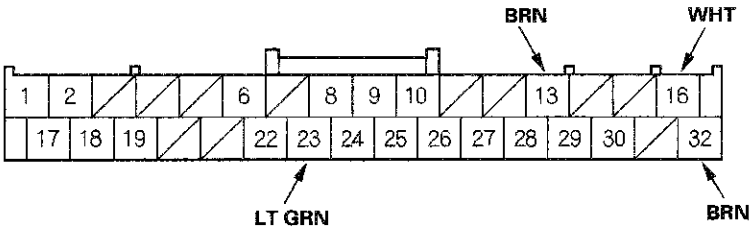

Wire side of female terminals

7. Inspect the connector and socket terminals to be sure they are all making good contact.
   - If the terminals are bent, loose or corroded, repair them as necessary, and recheck the system.
   - If the terminals are OK, go to step 8.
8. Reconnect the connector to the gauge control module, turn the ignition switch to ON (II), and make these input tests at all connector.
   - If any test indicates a problem, find and correct the cause, then recheck the system.
   - If the input tests prove OK, go to step 9.

Cavity	Wire	Test condition	Test: Desired result	Possible cause if desired result is not obtained
13	BRN	Under all conditions	Measure the voltage to ground: There should be less than 0.5 V.	• Poor ground (G501) • An open in the wire
16	WHT	Under all conditions	Measure the voltage to ground: There should be battery voltage.	• Blown No. 15 (10 A) fuse in the under-hood fuse/relay box • Faulty driver's under-dash fuse/relay box • An open in the wire
32	BRN	Ignition switch ON (II)	Measure the voltage to ground: There should be battery voltage.	• Blown No. 5 (7.5 A) fuse in the driver's under-dash fuse/relay box • Faulty driver's under-dash fuse/relay box • An open in the wire
23	LT GRN	Parking brake switch ON (Level pulled)	Measure the voltage to ground: There should be less than 1 V.	• Faulty parking brake switch • An open in the wire
		Parking brake switch OFF (Lever released)	Measure the voltage to ground: There should be 5 V or more.	• Faulty parking brake switch • A short to ground in the wire

9. Do the Gauge Control Module Self-diagnostic Function (see page 22-304), and check the beeper and the seat belt reminder indicator.
   - If the beeper sounds and the seat belt reminder indicator flashes, go to step 10.
   - If the beeper does not sound or the seat belt reminder indicator does not flash, replace the gauge control module (see page 22-324).
10. Substitute a known-good gauge control module, and recheck the system.
   - If the symptom is gone, the gauge control module is faulty; replace it.
   - If the symptom is still present, the driver's MICU is faulty; replace the driver's under-dash fuse/relay box (see page 22-84).

Component Location Index

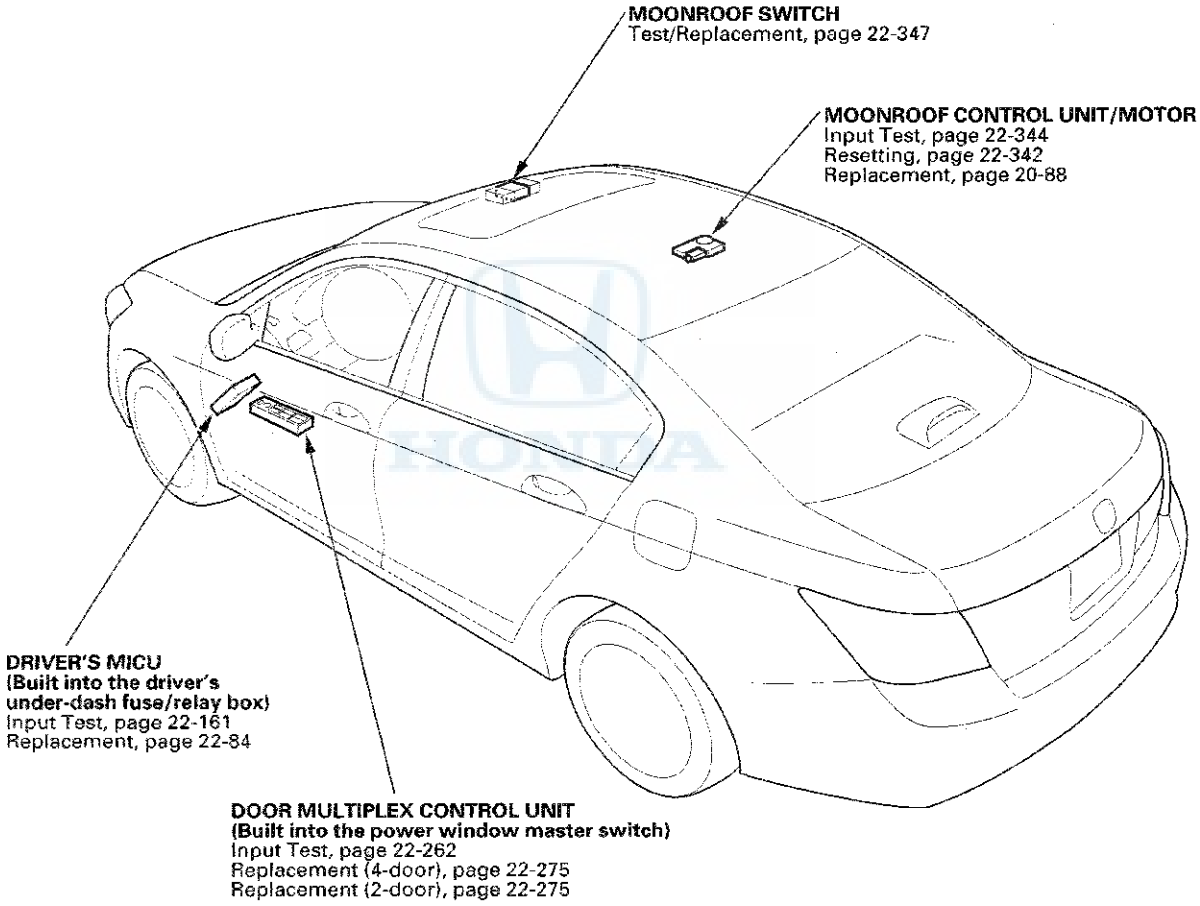

Resetting the Moonroof Control Unit

Resetting the moonroof is required when any of the following have occurred:

- The moonroof was moved manually while the battery was dead or disconnected.
- The moonroof motor was replaced with a new one.
- Any components related to the moonroof were replaced or removed and reinstalled.
  - Wind deflector
  - Moonroof glass
  - Moonroof seal
  - Moonroof glass bracket
  - Moonroof cables, etc.

To reset the moonroof control unit, do these steps:

1. Close the driver's door, and leave it closed until the procedure is complete.
2. Turn the ignition switch to LOCK (0).
3. Press and hold the tilt switch, and turn the ignition switch to ON (II).
4. Release the tilt switch, and turn the ignition switch to LOCK (0).
5. Repeat steps 3 and 4 four times.
6. Check if the AUTO OPEN and AUTO CLOSE functions still work. If they still work, the AUTO functions have not been cleared, go back to step 1. If the AUTO functions have been cleared, go to step 7.
7. Press and hold the moonroof open switch for 3 additional seconds after the moonroof is fully opened.
8. Press and hold the moonroof close switch for 3 additional seconds after the moonroof is fully closed (tilted).
9. Confirm that the moonroof control unit is reset by using the moonroof AUTO OPEN and AUTO CLOSE function.

Circuit Diagram

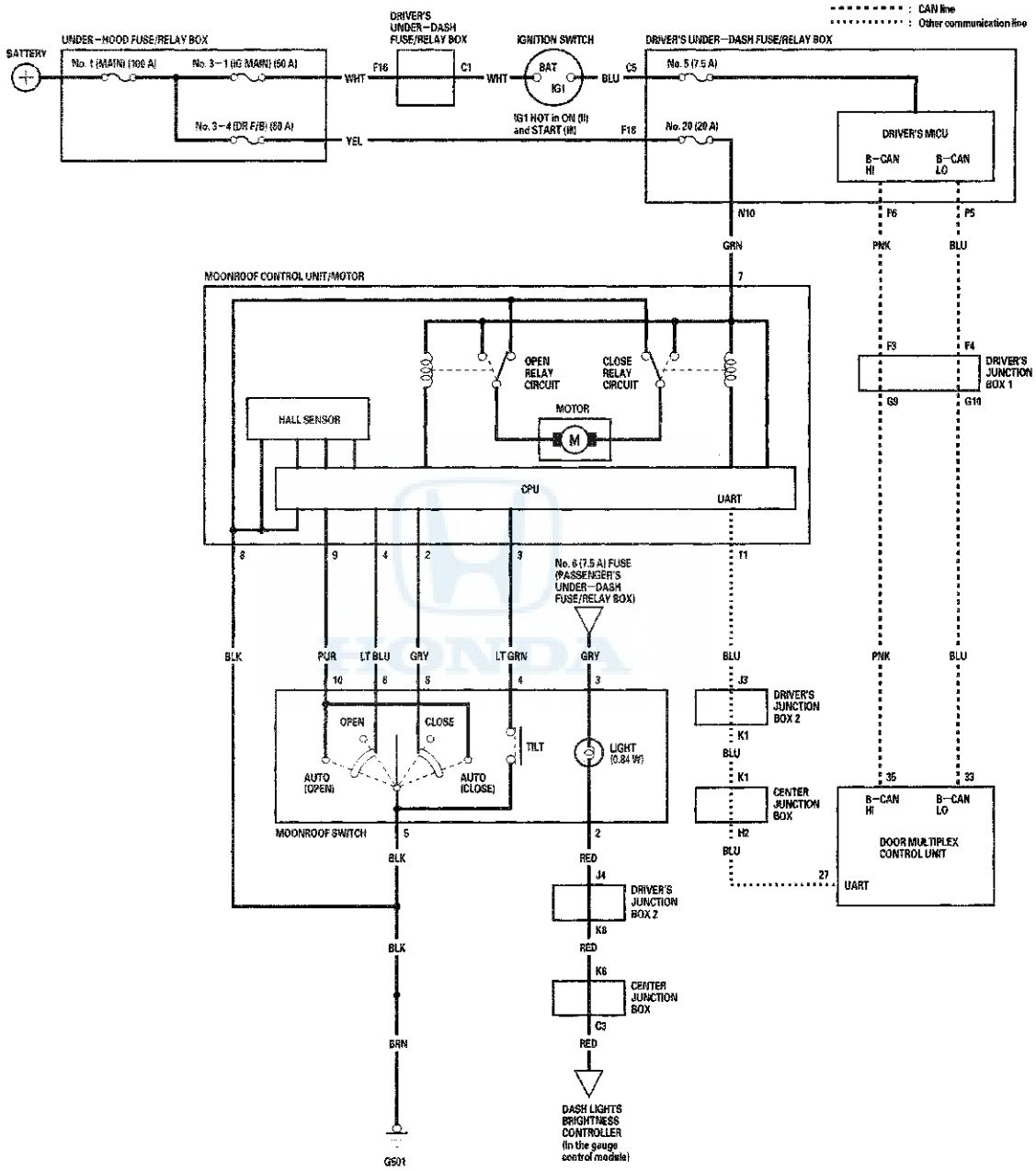

Moonroof Control Unit Input Test

NOTE: If the moonroof works OK manually, but will not work in AUTO, or reverses frequently (obstacle detection), reset the moonroof (see page 22-342) before proceeding with the input test.

1. Turn the ignition switch to LOCK (0).
2. Remove the headliner (see page 20-131).
3. Disconnect the 14P connector (A) from the moonroof control unit (B).

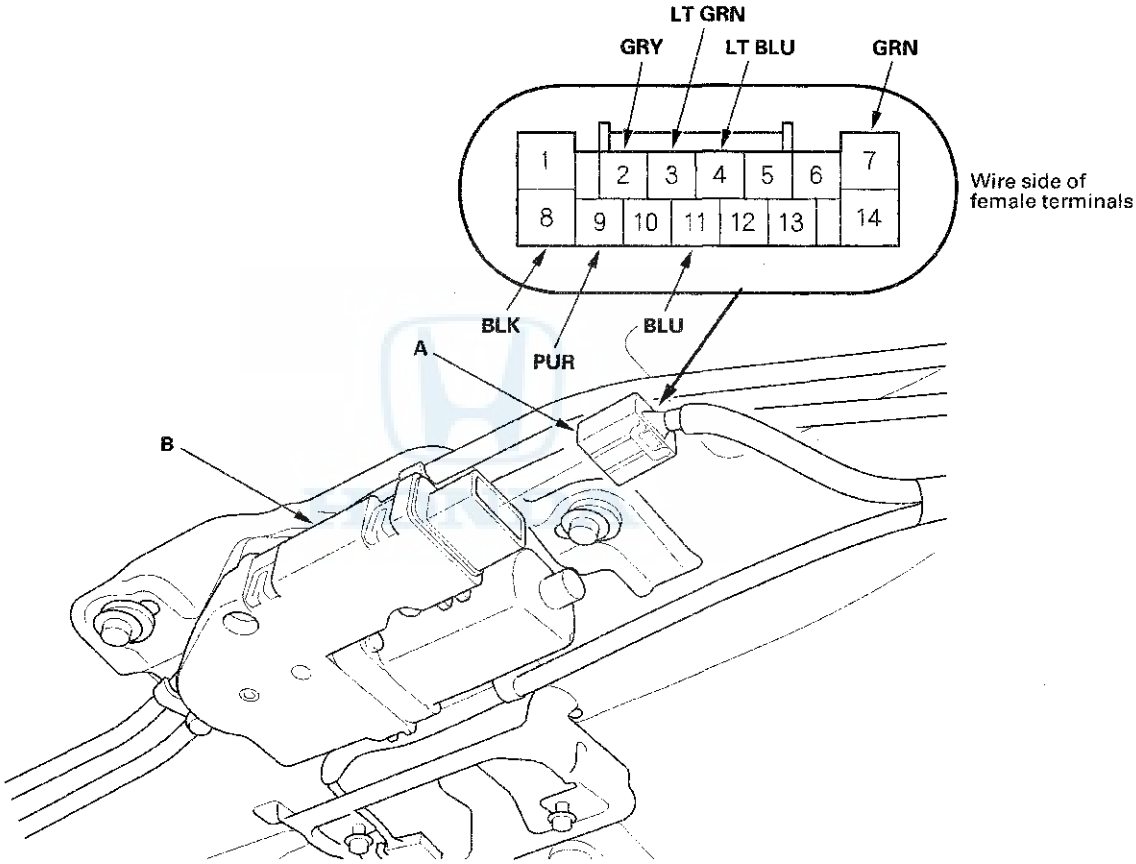

4. Inspect the connector and socket terminals to be sure they are all making good contact.
   - If the terminals are bent, loose or corroded, repair them as necessary, and recheck the system.
   - If the terminals look OK, go to step 5.

5. With the connector still disconnected, make these input tests at the connector.

- If any test indicates a problem, find and correct the cause, then recheck the system.
- If all the input tests prove OK, go to step 6.

Cavity	Wire	Test condition	Test: Desired result	Possible cause if desired result is not obtained
11	BLU	Under all conditions	Check for continuity between the moonroof switch 14P connector terminal No. 11 and power window master switch 37P connector terminal No. 27: There should be continuity.	An open in the wire
			Check for continuity between the moonroof switch 14P connector terminal No. 11 and body ground: There should be no continuity.	A short to ground in the wire

(cont'd)

Moonroof Control Unit Input Test (cont'd)

6. Reconnect the connector to the control unit, and make these input tests at the connector.

   - If any test indicates a problem, find and correct the cause, then recheck the system.
   - If all the input tests prove OK, go to step 7.

Cavity	Wire	Test condition	Test: Desired result	Possible cause if desired result is not obtained
7	GRN	Under all conditions	Measure the voltage to ground: There should be battery voltage.	• Blown No. 20 (20 A) fuse in the driver's under-dash fuse/relay box • An open in the wire
8	BLK	Under all conditions	Measure the voltage to ground: There should be 0.5 V or less.	• Poor ground (G501) • An open in the wire
2	GRY	Ignition switch to ON (II), moonroof switch in CLOSE position	Measure the voltage to ground: There should be 0.5 V or less.	• Faulty moonroof switch • Poor ground (G501) • An open in the wire
		Ignition switch to ON (II), moonroof switch released	Measure the voltage to ground: There should be battery voltage.	• Blown No. 2 (20 A) fuse in the driver's under-dash fuse/relay box • Faulty driver's under-dash fuse/relay box • A short to ground in the wire
3	LT GRN	Ignition switch to ON (II), moonroof switch in TILT position	Measure the voltage to ground: There should be 0.5 V or less.	• Faulty moonroof switch • Poor ground (G501) • An open in the wire
		Ignition switch to ON (II), moonroof switch released	Measure the voltage to ground: There should be battery voltage.	• Blown No. 2 (20 A) fuse in the driver's under-dash fuse/relay box • Faulty driver's under-dash fuse/relay box • A short to ground in the wire
4	LT BLU	Ignition switch to ON (II), moonroof switch in OPEN position	Measure the voltage to ground: There should be 0.5 V or less.	• Faulty moonroof switch • Poor ground (G501) • An open in the wire
		Ignition switch to ON (II), moonroof switch released	Measure the voltage to ground: There should be battery voltage.	• Blown No. 2 (20 A) fuse in the driver's under-dash fuse/relay box • Faulty driver's under-dash fuse/relay box • A short to ground in the wire
9	PUR	Ignition switch to ON (II), moonroof switch in AUTO OPEN or AUTO CLOSE position	Measure the voltage to ground: There should be 0.5 V or less.	• Faulty moonroof switch • Poor ground (G501) • An open in the wire
		Ignition switch to ON (II), moonroof switch released	Measure the voltage to ground: There should be battery voltage.	• Blown No. 2 (20 A) fuse in the driver's under-dash fuse/relay box • Faulty driver's under-dash fuse/relay box • A short to ground in the wire

7. If all the input tests are OK and multiple failures are found, replace the moonroof control unit/motor assembly. If the problem is related to the key-off operation, go to the driver's MICU input test (see page 22-161), and passenger's MICU input test (see page 22-164).

Moonroof Switch Test/Replacement

1. Remove the front individual map lights (see page 22-232).

2. Disconnect the moonroof switch 12P connector (A) and map light 3P connector (B).

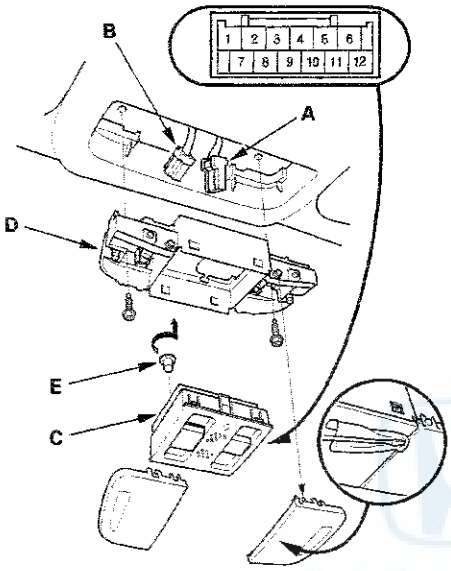

3. Remove the moonroof switch (C) from the map light housing (D).

4. Check for continuity between the terminals in each switch position according to the table.

Position \ Terminal	5	4	6	8	10	2		3
OPEN	○		○					
CLOSE	○			○				
TILT	○	○				○	○	○
CLOSE+AUTO	○			○	○			
OPEN+AUTO	○		○		○			

5. If the continuity is not as specified, replace the illumination bulb (E) or the switch.

6. Install the switch and light in the reverse order of removal.

Accessory Power Sockets

Component Location Index

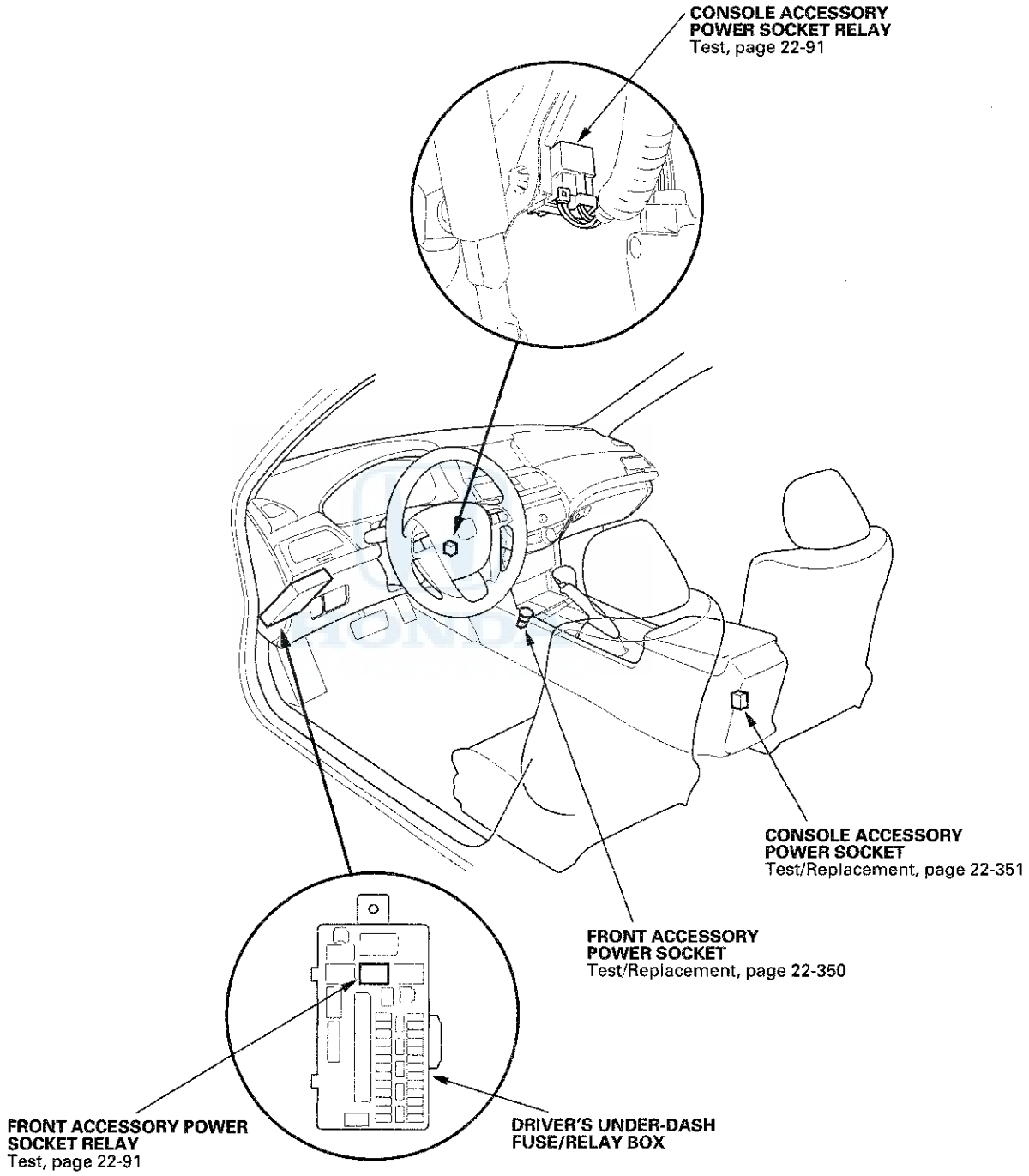

Circuit Diagram

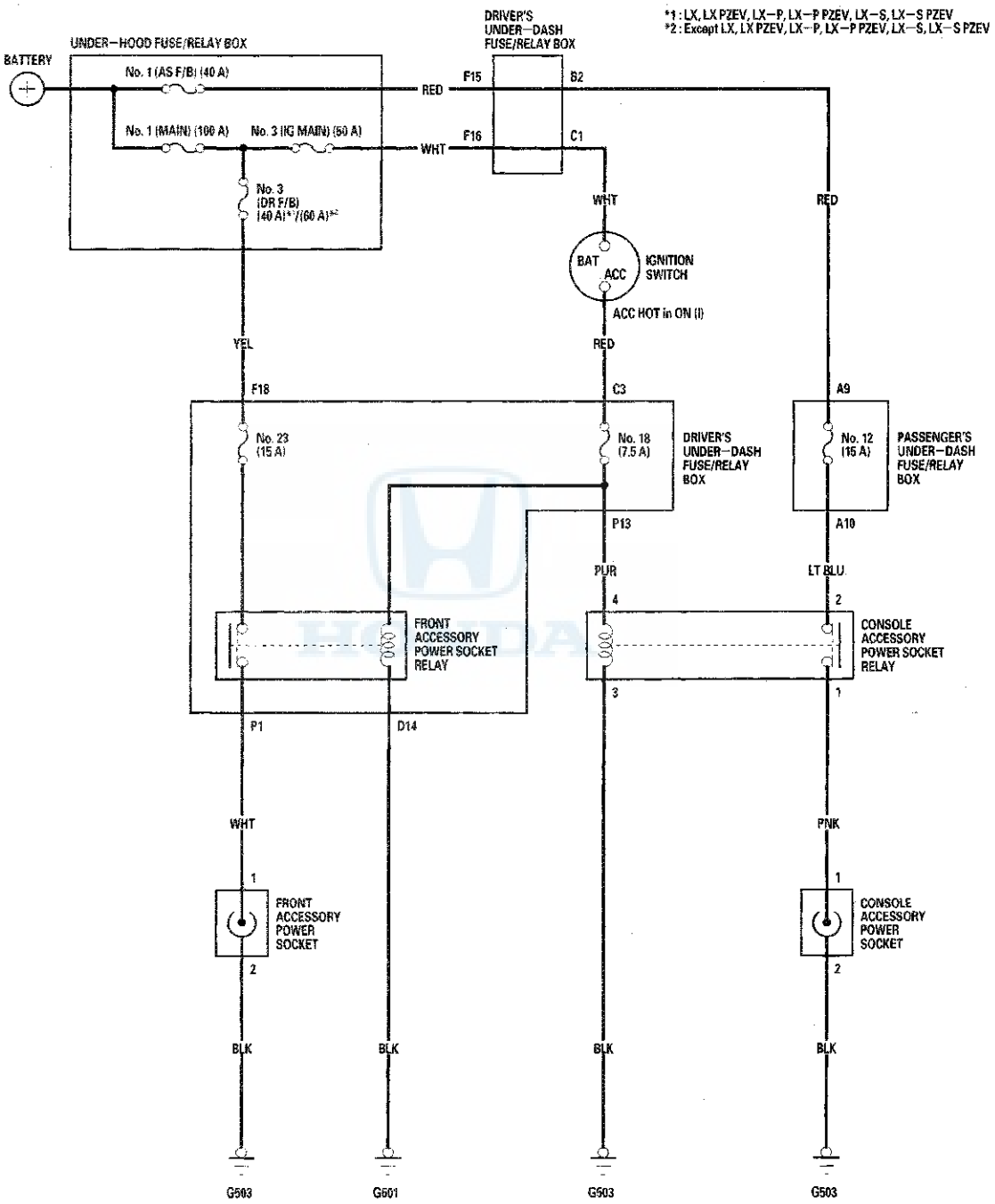

Front Accessory Power Socket Test/Replacement

NOTE: If all of the front and console accessory power sockets do not work, check the No. 18 (7.5 A) fuse in the driver's under-dash fuse/relay box and ground (G503) first.

1. Remove the center console panel (see page 20-146).

2. Disconnect the 2P connector (A) from the front accessory power socket (B).

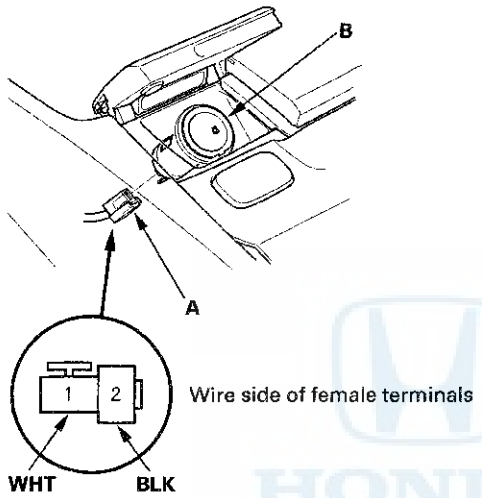

3. Inspect the connector terminals to be sure they are all making good contact.

   - If the terminals are bent, loose, or corroded, repair them as necessary and recheck the system.
   - If the terminals look OK, go to step 4.

4. Turn the ignition switch to ACC (I).

5. Measure the voltage between the front accessory power socket 2P connector terminal No. 1 and body ground. There should be battery voltage.

   - If there is battery voltage, go to step 6.
   - If there is no battery voltage, check for:
     - Blown No. 23 (15 A) fuse in the driver's under-dash fuse/relay box.
     - Faulty front accessory power socket relay.
     - Poor ground (G 601).
     - An open in the wire.

6. Check for continuity between the front accessory power socket terminal No. 2 and body ground. There should be continuity.

   - If there is continuity, replace the power socket; go to step 7.
   - If there is no continuity, check for:
     - Poor ground (G 503).
     - An open in the wire.

7. Remove the socket (A).

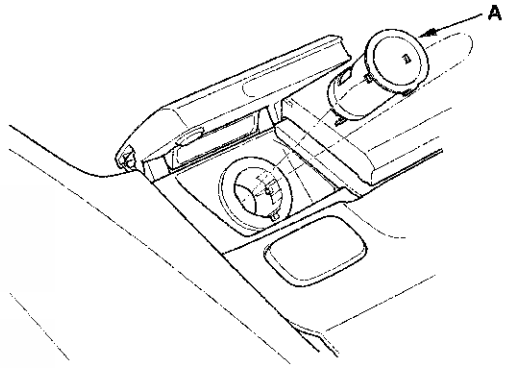

8. Remove the housing (A) from the panel.

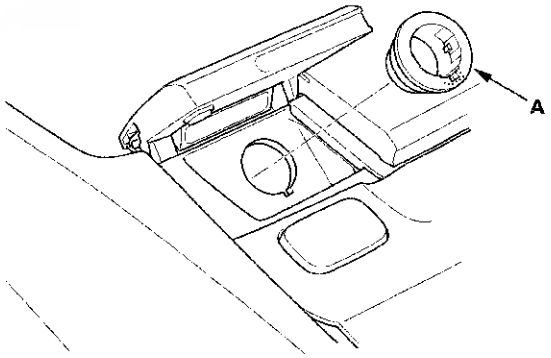

9. Install the power socket in the reverse order of removal.

Console Accessory Power Socket Test/Replacement

NOTE: If all of the front and console accessory power sockets do not work, check the No. 18 (7.5 A) fuse in the driver's under-dash fuse/relay box and ground (G503) first.

1. Remove the center console panel (see page 20-146).

2. Disconnect the 2P connector (A) from the console accessory power socket (B).

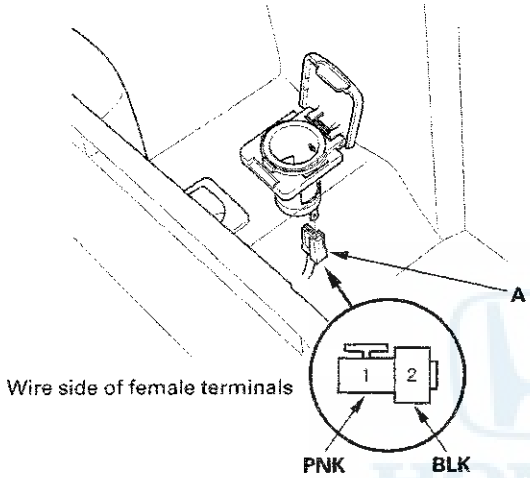

3. Inspect the connector terminals to be sure they are all making good contact.

   - If the terminals are bent, loose, or corroded, repair them as necessary and recheck the system.
   - If the terminals look OK, go to step 4.

4. Turn the ignition switch to ACC (I).

5. Measure the voltage between the console accessory power socket 2P connector terminal No. 1 and body ground. There should be battery voltage.

   - If there is battery voltage, go to step 6.
   - If there is no battery voltage, check for:
     - Blown No. 12 (15 A) fuse in the passenger's under-dash fuse/relay box.
     - Faulty console accessory power socket relay.
     - Poor ground (G 503).
     - An open in the wire.

6. Check for continuity between the console accessory power socket terminal No. 2 and body ground. There should be continuity.

   - If there is continuity, replace the power socket; go to step 7.
   - If there is no continuity, check for:
     - Poor ground (G 503).
     - An open in the wire.

7. Remove the socket (A).

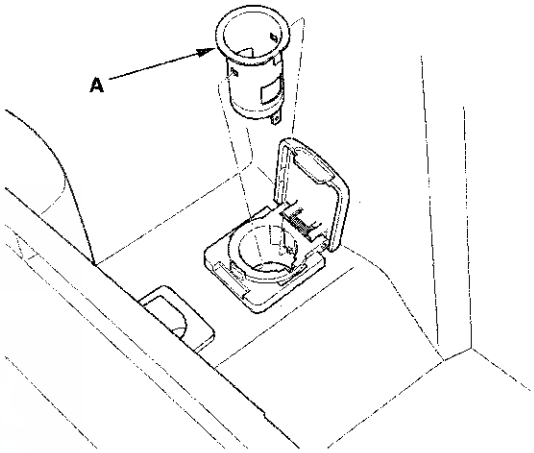

8. Remove the housing (A) from the panel.

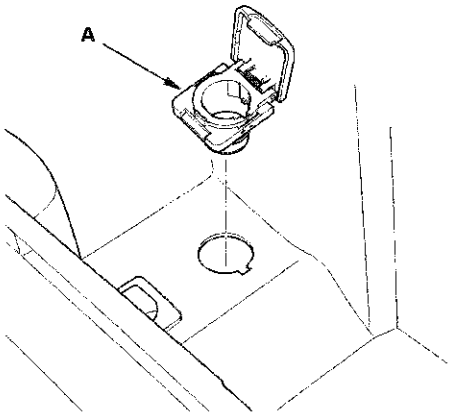

9. Install the power socket in the reverse order of removal.

Power Mirrors

Component Location Index

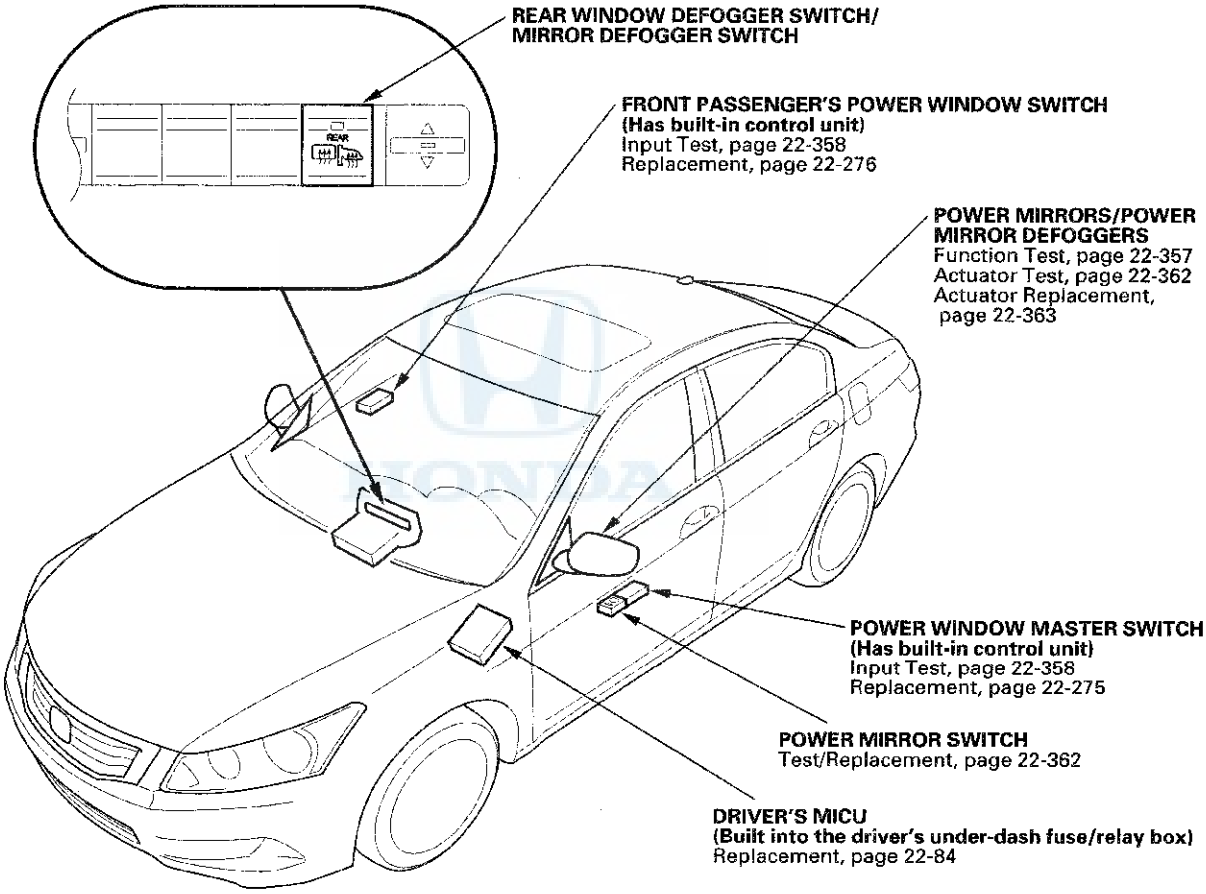

HONDA

Power Mirrors

Circuit Diagram

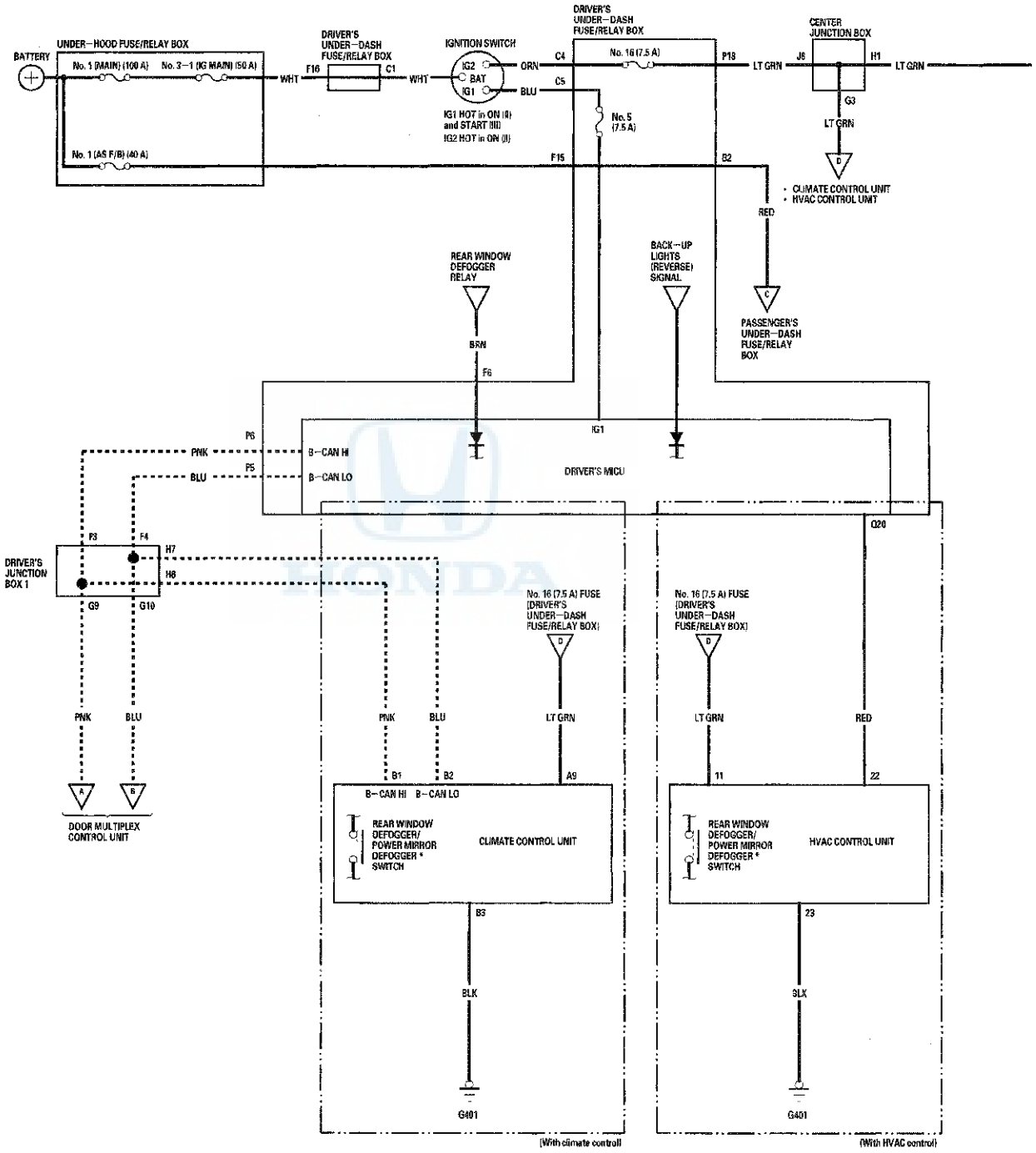

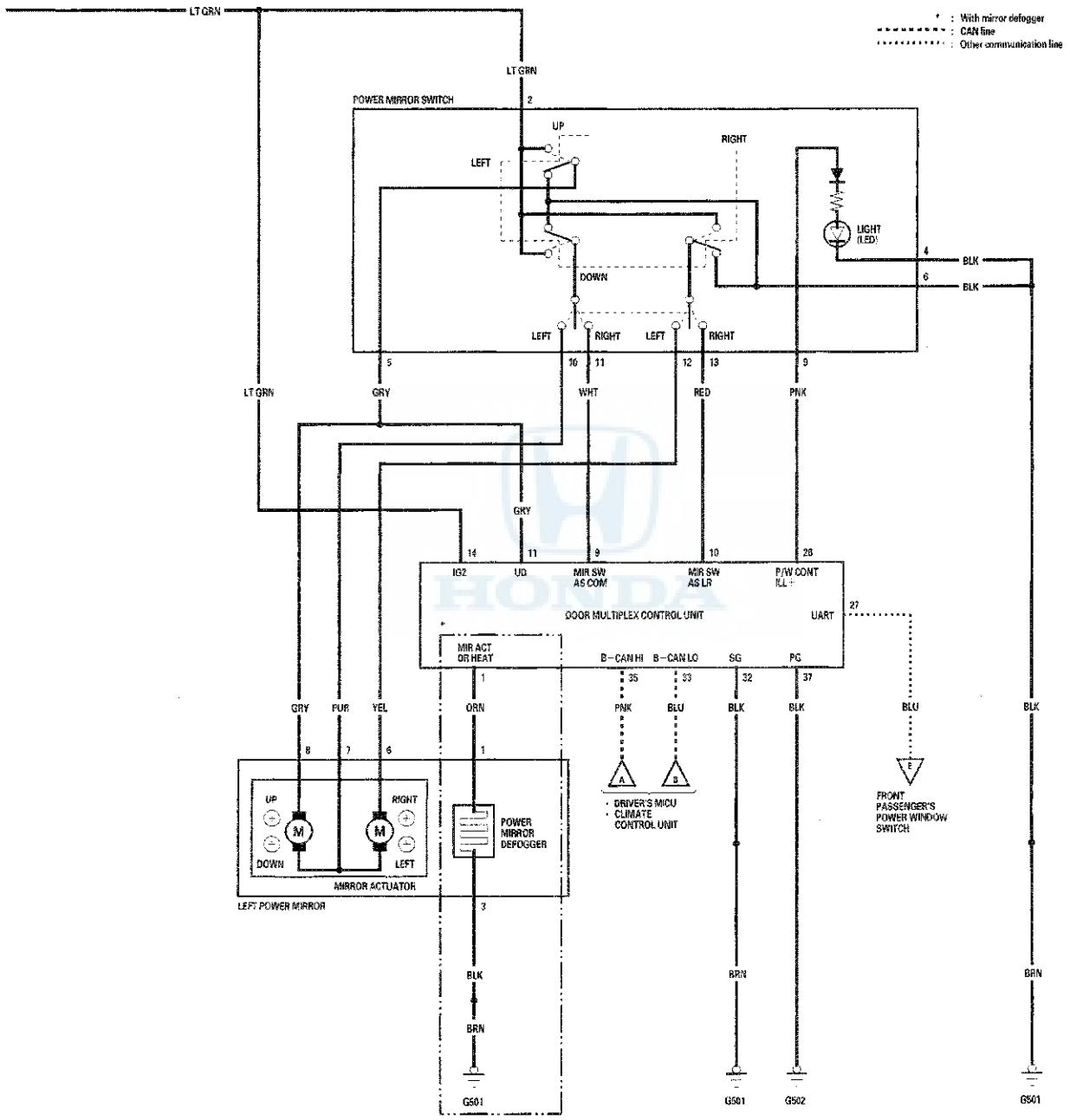
* : With mirror defogger
CAN line
Other communication line
LT GRN
POWER MIRROR SWITCH
UP
LEFT
RIGHT
DOWN
LIGHT (LED)
BLK
GRY
WHT
RED
PNK
IG2
UD
MIR SW AS COM
MIR SW AS LR
P/W CONT ILL +
DOOR MULTIPLEX CONTROL UNIT
UART
MIR ACT OR HEAT
B-CAN HI
B-CAN LO
SG
PG
PUR
YEL
ORN
BLU
DRIVER'S MICU
CLIMATE CONTROL UNIT
FRONT PASSENGER'S POWER WINDOW SWITCH
POWER MIRROR DEFOGGER
MIRROR ACTUATOR
LEFT POWER MIRROR
BRN
G501
G502

(cont'd)

Circuit Diagram (cont'd)

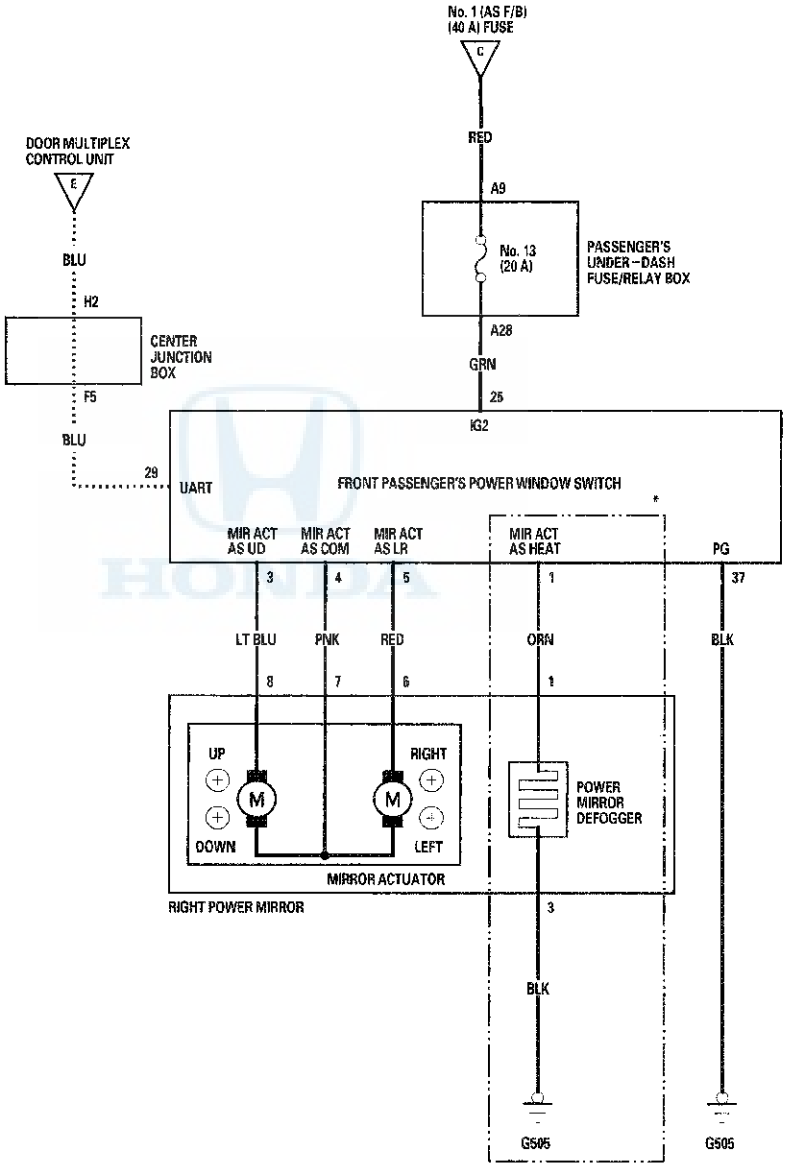

Function Test

NOTE: The right power mirror is controlled by the front passenger's power window switch. When the power mirror switch is operated, the door multiplex control unit receives the signals from the power mirror switch and sends the signals to the front passenger's power window switch. If there is malfunction of the right power mirror actuator operation, do the door multiplex control unit input test (see page 22-358) and front passenger's power window switch input test (see page 22-360).

Left Power Mirror Function Test

1. Remove the power window master switch (see page 22-275).

2. Disconnect the 13P connector (A) from the power mirror switch (B) and 37P connector (C) from the power window master switch (D).

   NOTE: The illustration shows 4-door model.

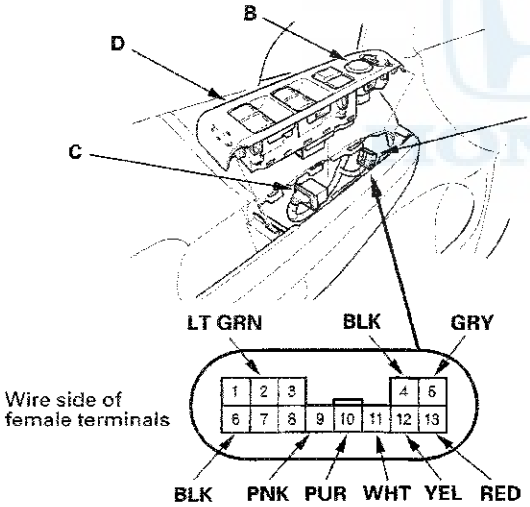

3. Turn the ignition switch to ON (II).

4. Measure the voltage between body ground and the No. 2 terminal of the power mirror switch 13P connector with the ignition switch ON (II). There should be battery voltage.

   - If there is no battery voltage, check for:
     - Blown No. 16 (7.5 A) fuse in the driver's under-dash fuse/relay box.
     - An open in the LT GRN wire.
   - If there is battery voltage, go to step 5.

5. Check for continuity between the terminal No. 6 and body ground. There should be continuity.

   - If there is no continuity, check for:
     - An open in the BLK wire.
     - Poor ground (G 501).
   - If there is continuity, go to step 6.

6. Connect the terminals No. 2 and No. 10, and the No. 5 (or No. 12) and terminals No. 6 with jumper wires. The left mirror should tilt down (or swing left) with the ignition switch ON (II).

   - If the left mirror does not tilt down (or does not swing left), check for an open in the GRY (or YEL) wire between the left mirror and the 13P connector. If the wire is OK, check the left mirror actuator.
   - If the mirror neither tilts down nor swings left, repair the PUR wire.
   - If the mirror works properly, check the mirror switch.

Power Window Master Switch Input Test

NOTE: Before testing, troubleshoot the multiplex integrated control unit first, using B-CAN System Diagnosis Test Mode A (see page 22-120).

1. Turn the ignition switch to LOCK (0), open and close the driver's door, then remove the power window master switch.

   - 4-door (see page 22-275)
   - 2-door (see page 22-275)

2. Disconnect the 37P connector (A) from the power window master switch (B).

   NOTE: The illustration shows 4-door models.

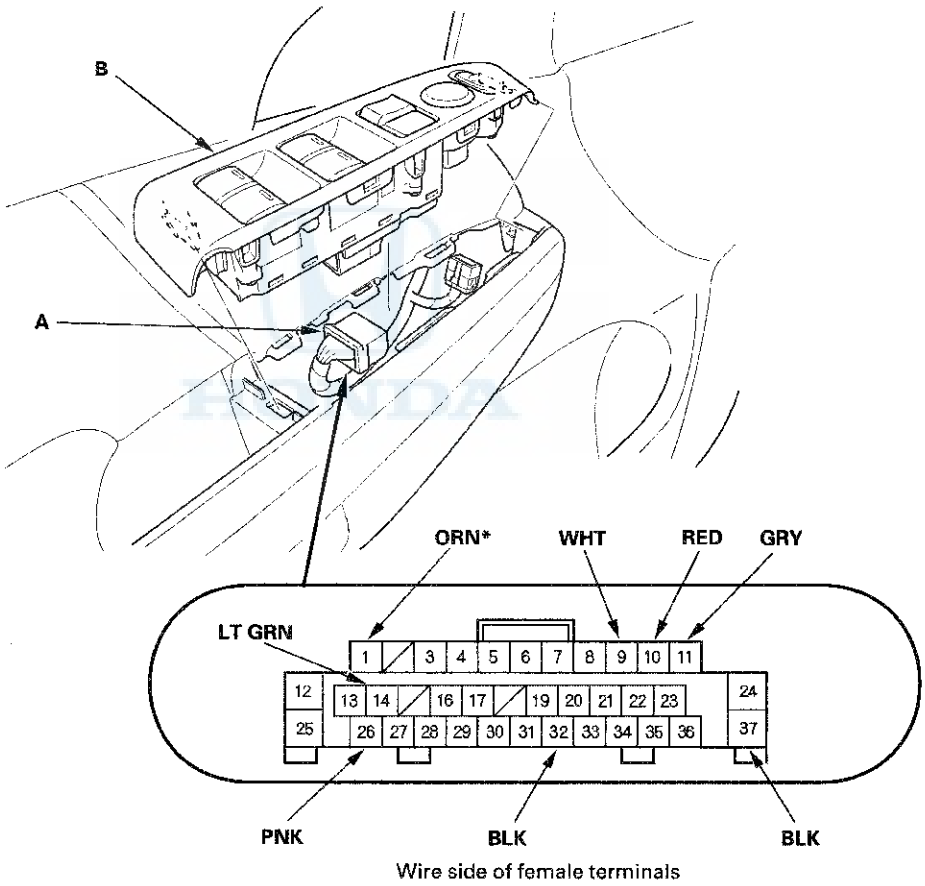

***: With mirror defogger**

3. Inspect the connector and socket terminals to be sure they are all making good contact.

   - If the terminals are bent, loose or corroded, repair them as necessary, and recheck the system.
   - If the terminals look OK, go to step 4.

4. Reconnect the connector to the power window master switch, turn the ignition switch to ON (II), and make these input tests at the connector.

   - If any test indicates a problem, find and correct the cause, then recheck the system.
   - If all the input tests prove OK, go to step 5.

Cavity	Wire	Test condition	Test: Desired result	Possible cause if desired result is not obtained
32	BLK	Under all conditions	Measure the voltage to ground: There should be less than 0.5 V.	• Poor ground (G501) • An open in the wire
37	BLK	Under all conditions	Measure the voltage to ground: There should be less than 0.5 V.	• Poor ground (G502) • An open in the wire
14	LT GRN	Ignition switch ON (II)	Measure the voltage to ground: There should be battery voltage.	• Blown No. 16 (7.5 A) fuse in the driver's under-dash fuse/relay box • An open in the wire

5. Turn the ignition switch to LOCK (0), open and close the driver's door, then disconnect the 37P connector from the power window master switch again.

6. With the connector still disconnected, make these input tests at the connector.

   - If any test indicates a problem, find and correct the cause, then recheck the system.
   - If all the input tests prove OK, the power window master switch must be faulty, replace it.

   NOTE: After replacing the power window master switch, reset the power window control unit (see page 22-251).

Cavity	Wire	Test condition	Test: Desired result	Possible cause if desired result is not obtained
9	WHT	Ignition switch ON (II), power mirror switch in RIGHT mirror position	Measure the voltage to ground: There should be battery voltage when the power mirror switch LEFT or DOWN is pressed.	• Blown No. 16 (7.5 A) fuse in the driver's under-dash fuse/relay box • Faulty power mirror switch • An open in the wire
10	RED	Ignition switch ON (II), power mirror switch in RIGHT mirror position	Measure the voltage to ground: There should be battery voltage when the power mirror switch RIGHT is pressed.	• Blown No. 16 (7.5 A) fuse in the driver's under-dash fuse/relay box • Faulty power mirror switch • An open in the wire
11	GRY	Ignition switch ON (II), power mirror switch in RIGHT mirror position	Measure the voltage to ground: There should be battery voltage when the power mirror switch UP is pressed.	• Blown No. 16 (7.5 A) fuse in the driver's under-dash fuse/relay box • Faulty power mirror switch • An open in the wire
1*	ORN	Ignition switch ON (II), connect terminals No. 14 and No. 1 with a jumper wire	Check the left power mirror defogger operation: The left power mirror defogger should work (the inside lower edge becomes warm).	• Faulty left power mirror defogger • Poor ground (G503) • An open in the wire
26	PNK	Ignition switch ON (II), connect terminals No. 14 and No. 26 with a jumper wire	Check the power mirror switch light operation: The power mirror switch light should come on.	• Faulty LED • Faulty power mirror switch • Poor ground (G501) • An open in the wire

*: With mirror defogger

Front Passenger's Power Window Switch Input Test

1. Turn the ignition switch to LOCK (0), open and close the driver's door, then remove the front passenger's (passenger's) power window switch (see page 22-276).

2. Disconnect the 37P connector (A) from the front passenger's (passenger's) power window switch (B).

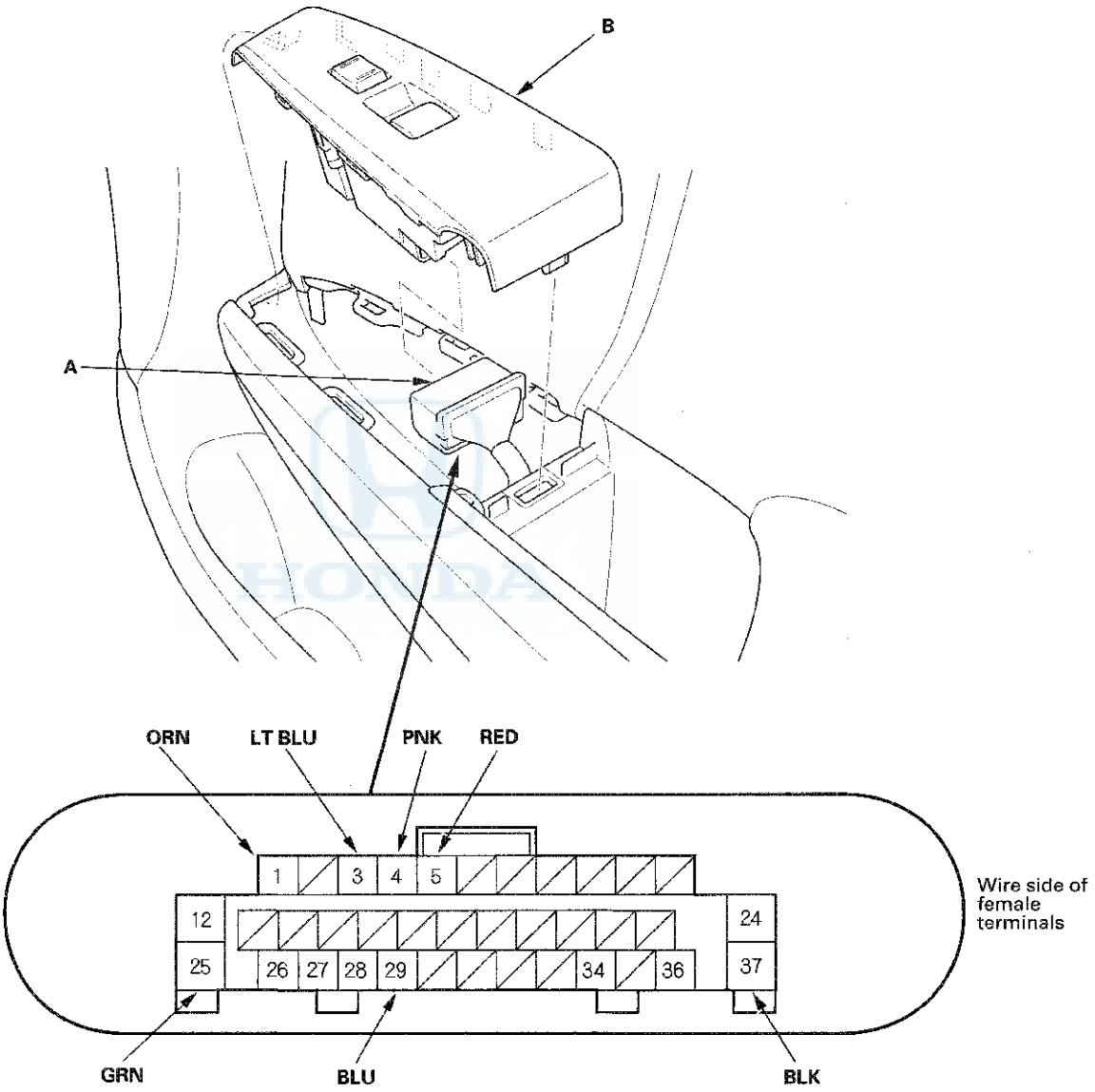

3. Inspect the connector and socket terminals to be sure they are all making good contact.

   - If the terminals are bent, loose, or corroded, repair them as necessary, and recheck the system.
   - If the terminals look OK, go to step 4.

4. Reconnect the connector to the front passenger's power window switch, turn the ignition switch to ON (II), and make these input tests at the connector.

   - If any test indicates a problem, find and correct the cause, then recheck the system.
   - If all the input tests prove OK, go to step 5.

Cavity	Wire	Test condition	Test: Desired result	Possible cause if desired result is not obtained
37	BLK	Under all conditions	Measure the voltage to ground: There should be less than 0.5 V.	• Poor ground (G505) • An open in the wire
25	GRN	Under all conditions	Measure the voltage to ground: There should be battery voltage.	• Blown No. 13 (20 A) fuse in the passenger's under-dash fuse/relay box • Faulty driver's under-dash fuse/relay box • Faulty passenger's under-dash fuse/relay box • An open in the wire

5. Turn the ignition switch to LOCK (0), open and close the driver's door, then disconnect the 37P connector from the front passenger's power window switch again.

6. With the connector still disconnected, make these input tests at the connector.

   - If any test indicates a problem, find and correct the cause, then recheck the system.
   - If all the input tests prove OK, replace the front passenger's power window switch, and go to step 7.

Cavity	Wire	Test condition	Test: Desired result	Possible cause if desired result is not obtained
3 · 4	LT BLU · PNK	Ignition switch ON (II), connect terminals No. 25 and No. 3 (or No. 4), and terminals No. 4 (or No. 3) and No. 37 with jumper wires.	Check the right power mirror operation: The right power mirror should UP (or DOWN).	• Faulty right power mirror • Poor ground (G505) • An open in the wire
4 · 5	PNK · RED	Ignition switch ON (II), connect terminals No. 25 and No. 4 (or No. 5), and terminals No. 5 (or No. 4) and No. 37 with jumper wires.	Check the right power mirror operation: The right power mirror should LEFT (or RIGHT).	• Faulty right power mirror • Poor ground (G503) • An open in the wire
1*	ORN	Connect terminals No. 25 and No. 1 with a jumper wire	Check the right power mirror defogger operation: The right power mirror defogger should work (the inside lower edge becomes warm).	• Faulty right power mirror defogger • Poor ground (G503) • An open in the wire
29	BLU	Under all conditions, disconnect the power window master switch 37P connector	Check for continuity between the terminal No. 29 and the power window master switch 37P connector terminal No. 27: There should be continuity.	An open in the wire

* : With mirror defogger

7. With the front passenger's power window AUTO UP/AUTO DOWN function, reset the power window control unit (see page 22-251).

Power Mirror Switch Test/ Replacement

1. Remove the power window master switch.
   - 4-door (see page 22-275)
   - 2-door (see page 22-275)
2. Disconnect the 13P connector from the power mirror switch (A).

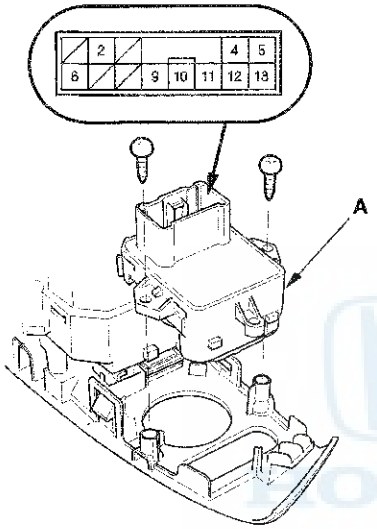

3. Check for continuity between the terminals in each switch position according to the table.

Position \ Terminal		2	5	6	10	11	12	13
L	UP	○—○		○—○				
	DOWN	○	○—○		○			
	LEFT	○		○	○		○	
	RIGHT	○		○—○			○	
R	UP	○—○		○		○		
	DOWN	○	○—○			○		
	LEFT	○		○		○		○
	RIGHT	○		○		○		○

4. If the continuity is not as specified, remove the screws and replace the power mirror switch.

Power Mirror Actuator Test

1. Remove the mirror mount cover (see page 20-55).
2. Disconnect the 8P connector (A) from the power mirror actuator (B).

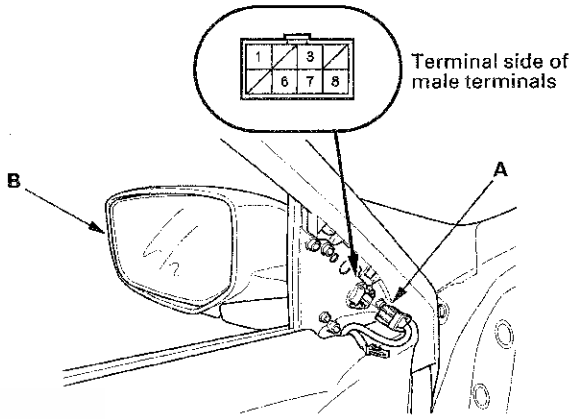

3. Check actuator operation by connecting battery power and ground according to the table.

Position \ Terminal	6	7	8
TILT UP		⊖	⊕
TILT DOWN		⊕	⊖
SWING LEFT	⊖	⊕	
SWING RIGHT	⊕	⊖	

4. If the mirror fails to work properly, check for an open in the wire between the connector and the mirror holder. If the wire is OK, replace the mirror actuator.

Defogger Test

5. Measure the resistance between the terminals No. 1 and No. 3 of the 8P connector. There should be about 7 Ω.
6. If the resistance is not as specified, check for an open in the wire between the connector and the mirror holder. If the wire is OK, replace the mirror holder.

Power Mirror Actuator Replacement

Removal

1. Remove the mirror holder (see page 20-56).

2. Remove the power mirror (see page 20-55), and disconnect the power mirror 8P connector from the door wire harness.

3. Remove the gasket (A).

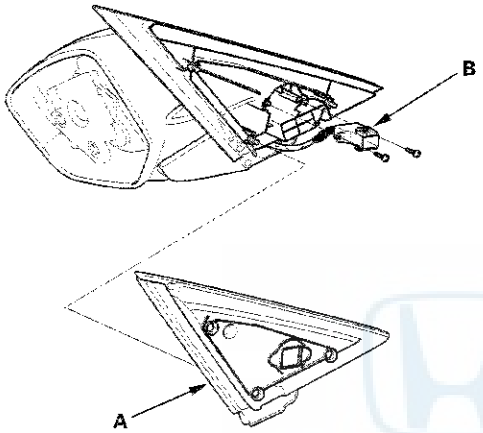

4. Remove the screws from the power mirror 8P connector (B).

5. Record the power mirror 8P connector terminal locations and wire colors.

6. Disassemble the power mirror 8P connector (A), and remove all terminals from it.

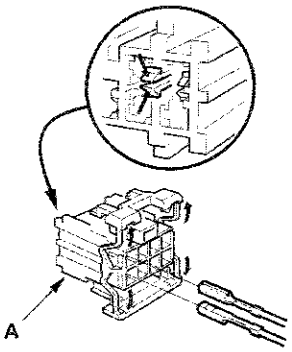

7. Remove the cover (A).

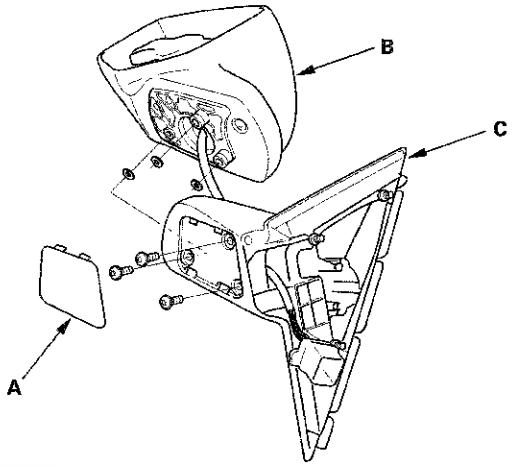

8. Remove the three screws, and separate the mirror housing (B) from the bracket (C).

(cont'd)

Power Mirror Actuator Replacement (cont'd)

9. Remove the screws and the actuator (A).

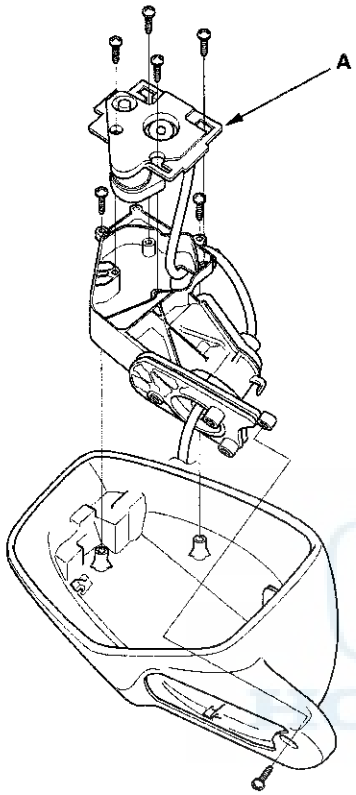

Installation

1. Route the wire harness (A) of a new actuator through the hole in the bracket (B).

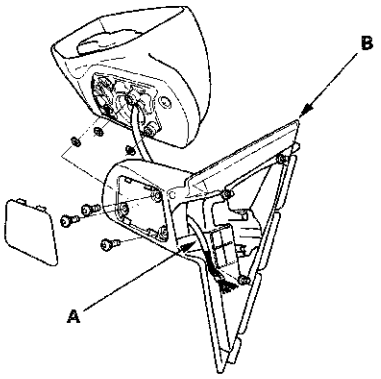

2. Install the parts in the reverse order of removal.
3. Insert the new actuator terminals into the connector in the original arrangement.

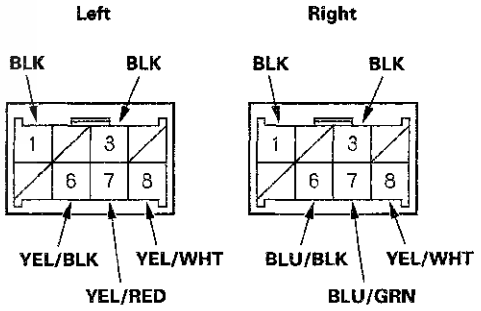

Terminal side of male terminals

4. Apply EPT sealer to the intersection of the wire harness and the 8P connector, then install the 8P connector in the reverse order of removal.
5. Install the gasket in the reverse order of removal.
6. Reassemble in the reverse order of disassembly.

   NOTE: Be careful not to break the mirror when reinstalling it to the actuator.

7. Reinstall the mirror assembly on the door.
8. Operate the power mirror to ensure smooth operation.

Automatic Dimming Inside Mirror

Circuit Diagram

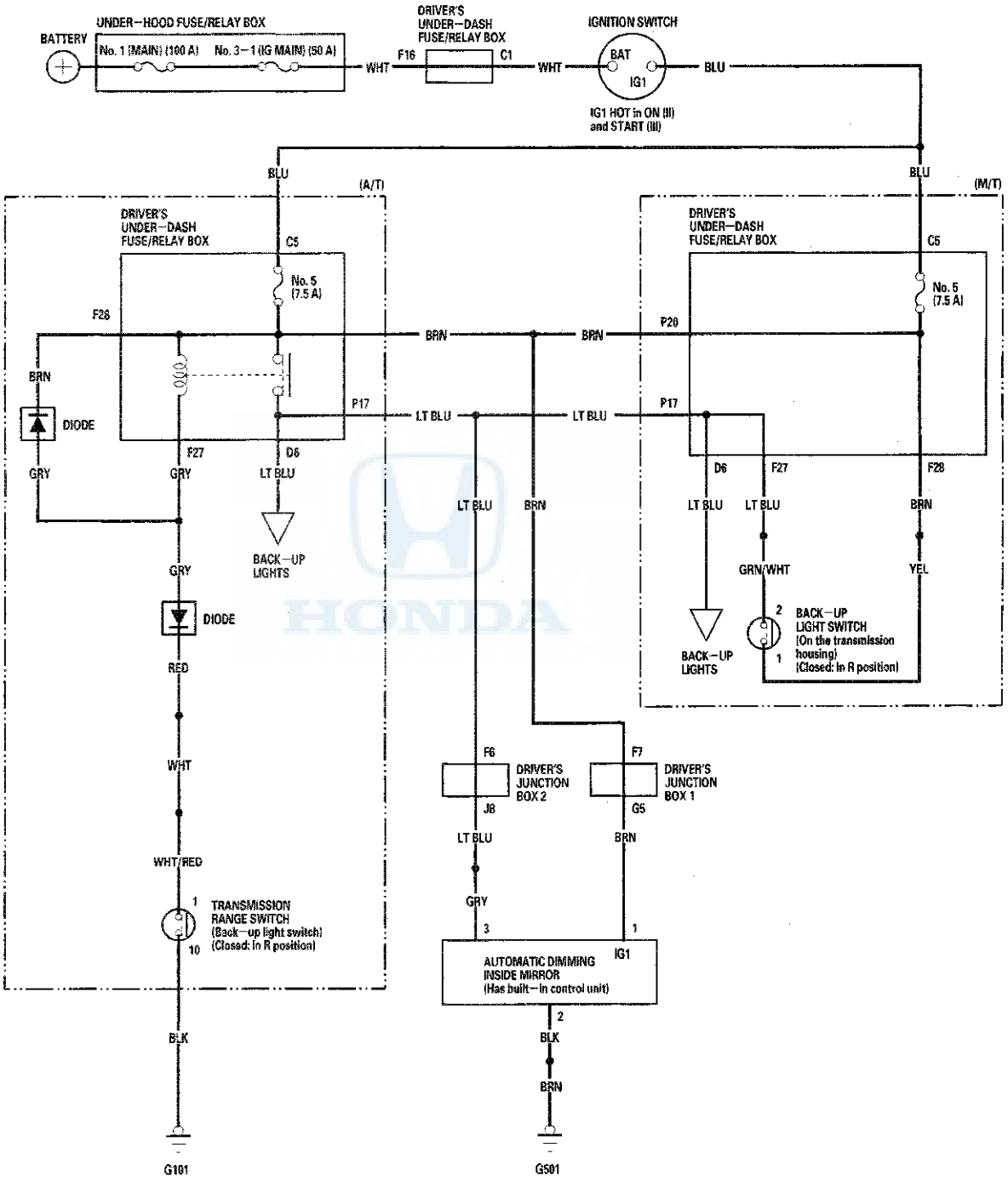

Automatic Dimming Inside Mirror

System Description

EX-L, EX-L PZEV models

The automatic dimming inside mirror has a front-facing lux level sensor (A), rear-facing lux level sensors (B), and a control unit. The control unit receives signals from each sensor. Based on the difference between the two lux levels (the light outside the vehicle and the light from the headlights of the other vehicle, etc.), the control unit controls the electro-chromic gel to reduce the glare. This dimming function is canceled when the transmission is in reverse, or when the automatic dimming off switch (C) is turned OFF.

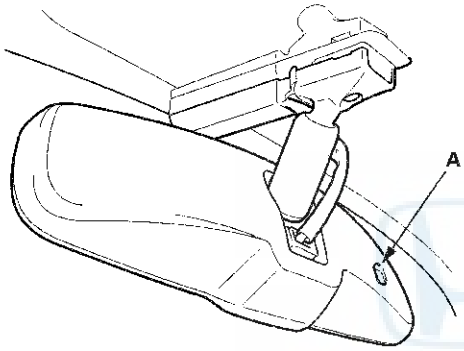

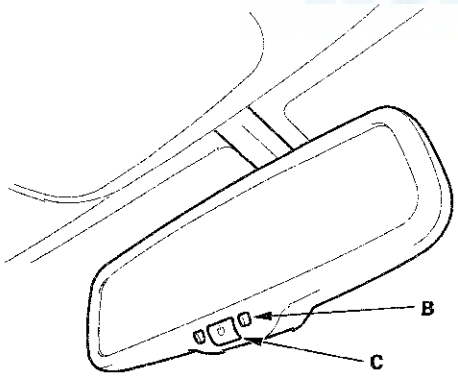

Test/Replacement

EX-L, EX-L PZEV models

1. Remove the cover (A), then disconnect 6P connector (B).

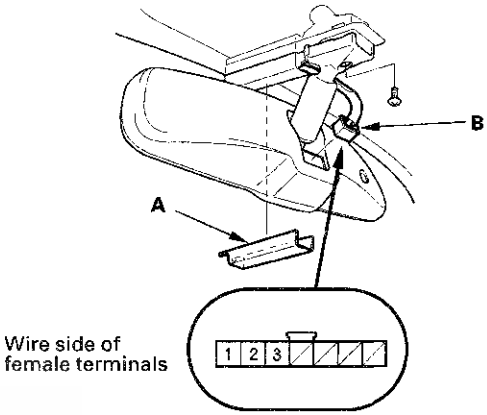

2. Turn the ignition switch to ON (II).

3. Measure the voltage between the terminal No. 2 and body ground.

   - If there is less than 0.5 V, go to step 4.
   - If there is more than 0.5 V, check for:
     - An open in the wire.
     - Poor ground (G 501).

4. Measure the voltage between the terminal No. 1 and body ground.

   - If there is battery voltage, go to step 5.
   - If there is no voltage, check for:
     - Blown No. 5 (7.5 A) fuse in the driver's under-dash fuse/relay box.
     - An open in the wire.

5. Measure the voltage between the terminal No. 3 and body ground with the transmission range switch in R position.

   - If there is battery voltage, replace the mirror assembly.
   - If there is no voltage, check for:
     - An open in the wire.
     - Faulty driver's under-dash fuse/relay box.
     - Faulty transmission range switch.

Power Seats

Component Location Index

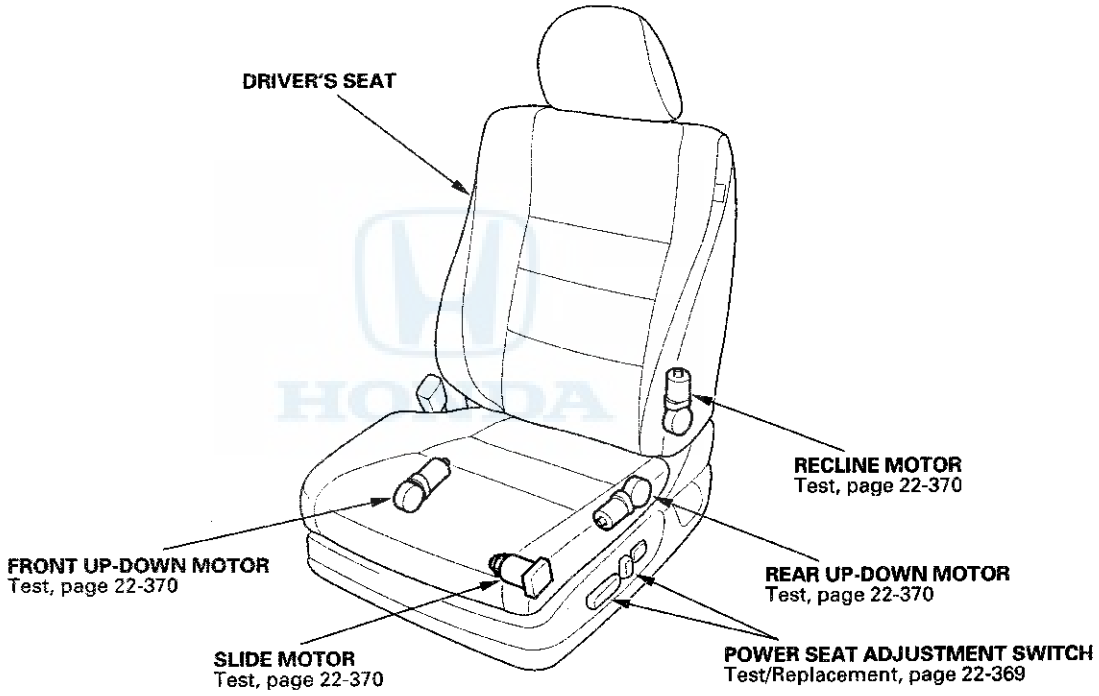

Circuit Diagram

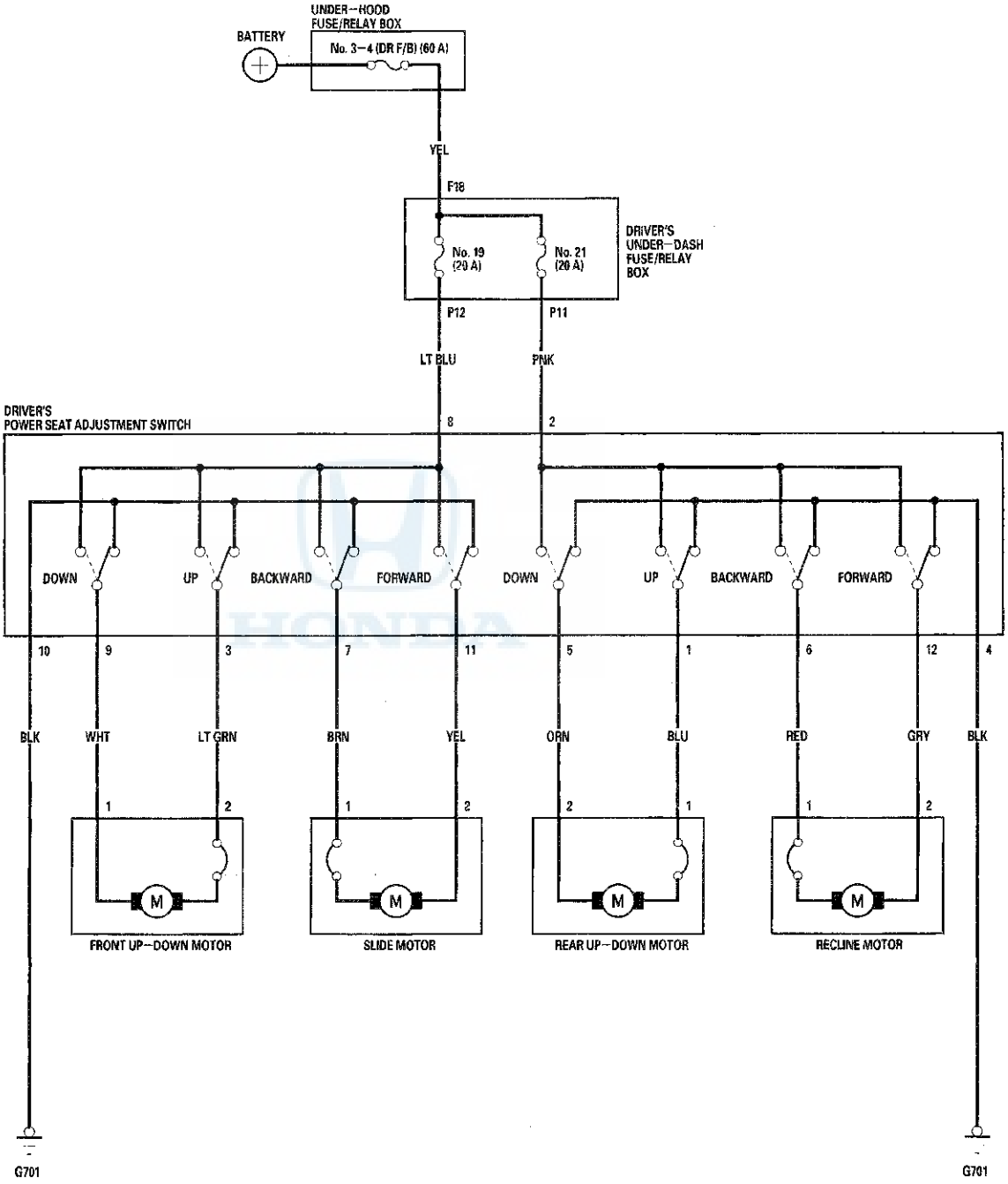

Power Seat Adjustment Switch Test/Replacement

1. Remove the driver's seat (see page 20-181).

2. Remove the power seat adjustment switch knobs (A) and the recline cover from the driver's seat (see page 20-205), then remove the two screws and the power seat adjustment switch (B).

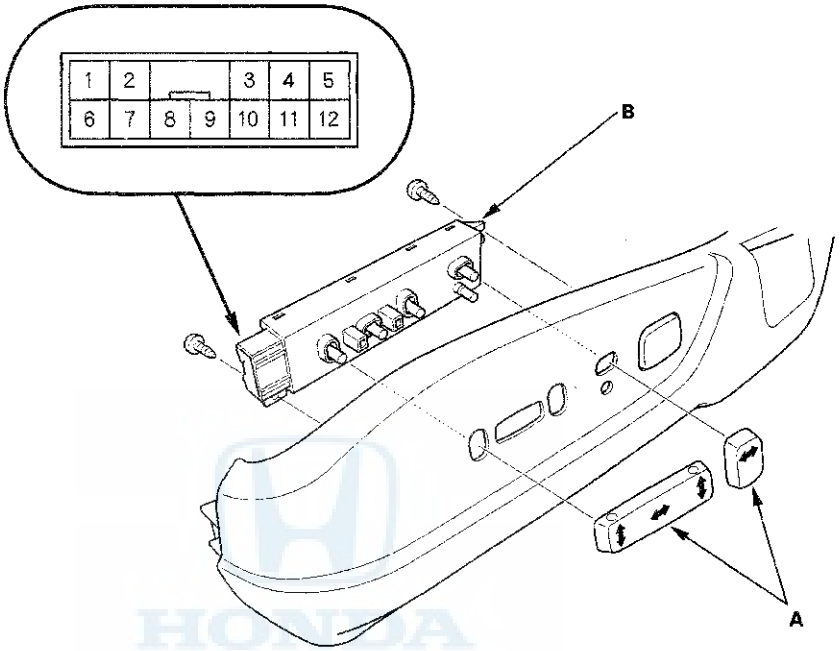

3. Disconnect the 12P connector from the power seat adjustment switch.

4. Reinstall the adjustment switch knobs to the switch.

5. Check for continuity between the terminals in each switch position according to the table.

Position \ Terminal		1	2	3	4	5	6	7	8	9	10	11	12
SLIDE SWITCH	Forward							○	○		○	○	
	Backward							○	○			○	
RECLINE SWITCH	Forward		○		○		○						○
	Backward		○		○		○						○
FRONT UP-DOWN SWITCH	UP			○					○	○			
	DOWN			○					○	○	○		
REAR UP-DOWN SWITCH	UP	○	○		○	○							
	DOWN	○	○		○	○							

6. If the continuity is not as specified, replace the switch.

Driver's Power Seat Motor Test

1. Remove the driver's seat (see page 20-181).
2. Remove the power seat adjustment switch knobs and the recline cover from the seat (see page 20-205).
3. Disconnect the 12P connector (A) from the power seat adjustment switch (B).

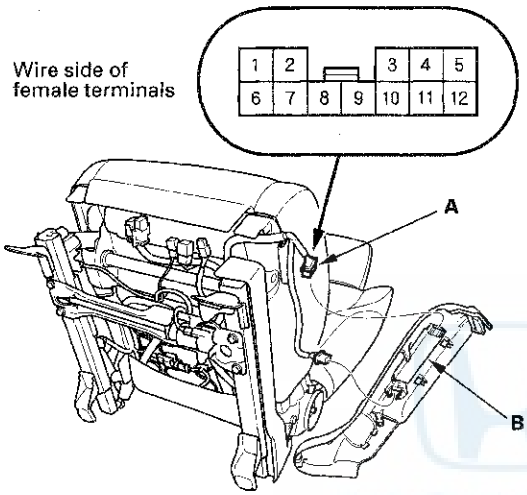

4. At the 12P connector of the driver's seat wire harness side, test the motor by applying battery power and ground to the terminals according to the table.

Slide motor

Terminal / Position	7	11
Forward	⊖	⊕
Backward	⊕	⊖

Recline motor

Terminal / Position	6	12
Forward	⊖	⊕
Backward	⊕	⊖

Front up-down motor

Terminal / Position	3	9
UP	⊕	⊖
DOWN	⊖	⊕

Rear up-down motor

Terminal / Position	1	5
UP	⊕	⊖
DOWN	⊖	⊕

5. If the motor does not run or fails to run smoothly, go to step 6.

6. Disconnect the 2P connector from each motor.

   NOTE:
   - For the recline motor, remove the seat-back cover, 2-door (see page 20-199), 4-door (see page 20-205).
   - All connector views are wire side of female terminals.

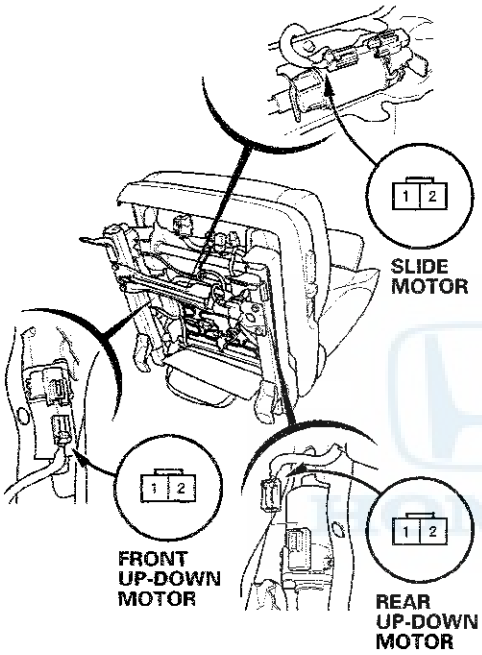

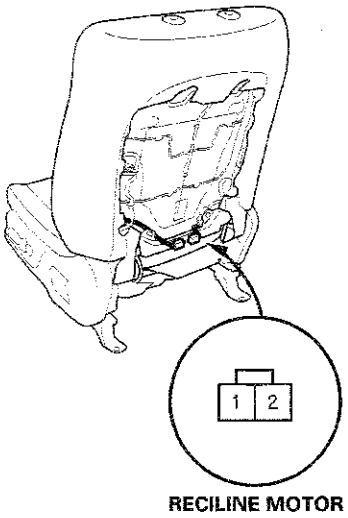

7. Check for continuity between each motor 2P connector and the driver's seat wire harness 12P connector. If there is continuity, replace the appropriate motor:

   - Slide motor (see page 20-189)
   - Recline motor (see page 20-187)

   NOTE: The front and rear up-down motors are part of the up-down adjuster.

Slide motor 2P connector terminal	Driver's seat wire harness 12P connector
No. 1	No. 7
No. 2	No. 11

Recline motor 2P connector terminal	Driver's seat wire harness 12P connector
No. 1	No. 6
No. 2	No. 12

Front up-down motor 2P connector terminal	Driver's seat wire harness 12P connector
No. 1	No. 9
No. 2	No. 3

Rear up-down motor 2P connector terminal	Driver's seat wire harness 12P connector
No. 1	No. 1
No. 2	No. 5

Power Lumbar Support

Component Location Index

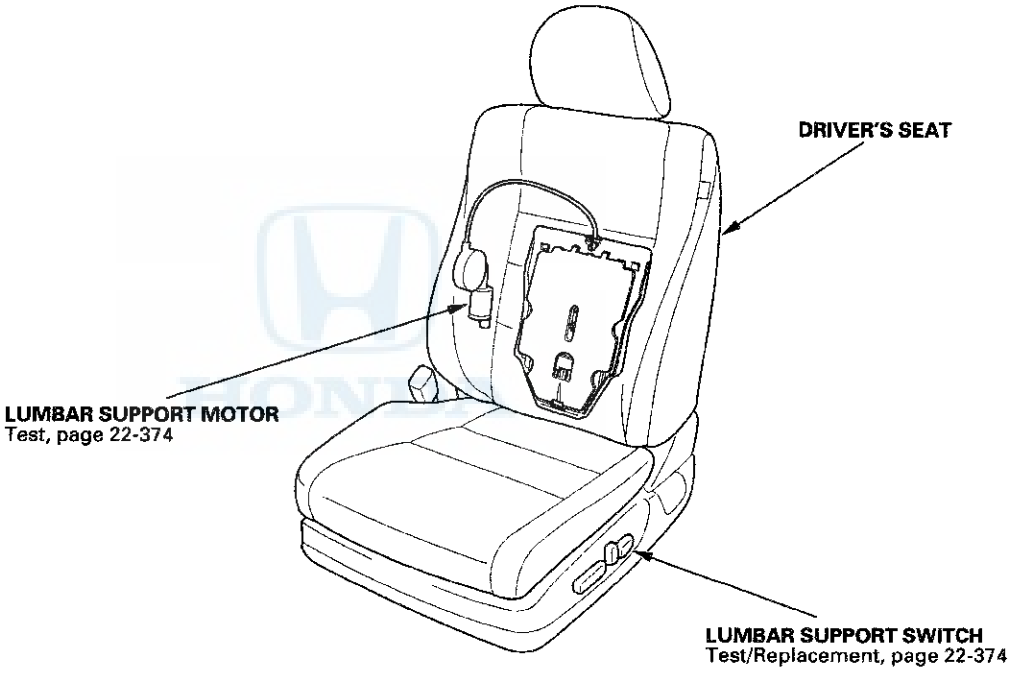

Circuit Diagram

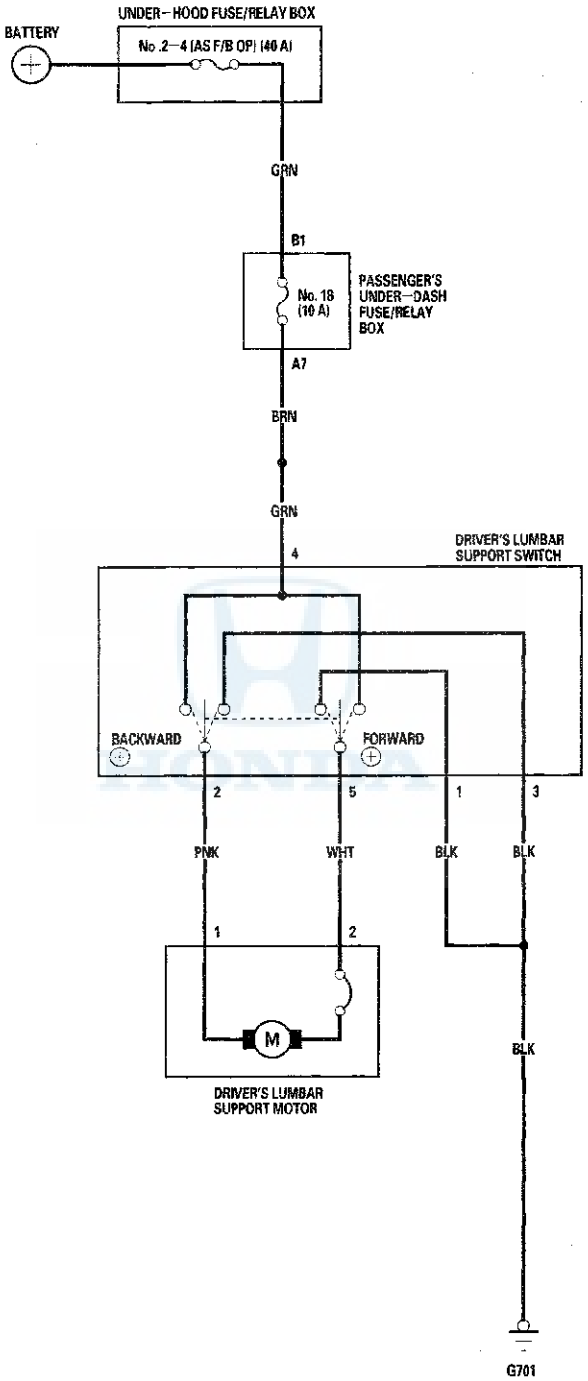

Power Lumbar Support

Switch Test/Replacement

1. Separate the lumbar support switch cover (A) from the switch (B).

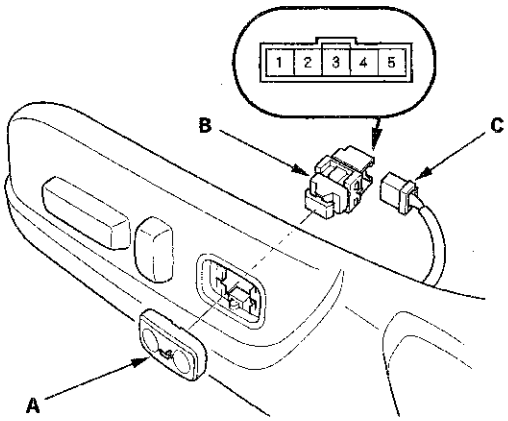

2. Disconnect the 5P connector (C) from the switch.

3. Check for continuity between the terminals in each switch position according to the table.

Terminal / Position	1	2	3	4	5
Forward		○	○	○	○
Backward	○	○		○	○

4. If the continuity is not as specified, replace the switch.

Motor Test

1. Remove the front seat-back cover (see page 20-205), and seat-back pad (see page 20-188).

2. Disconnect the 2P connector (A) from the lumbar support motor (B).

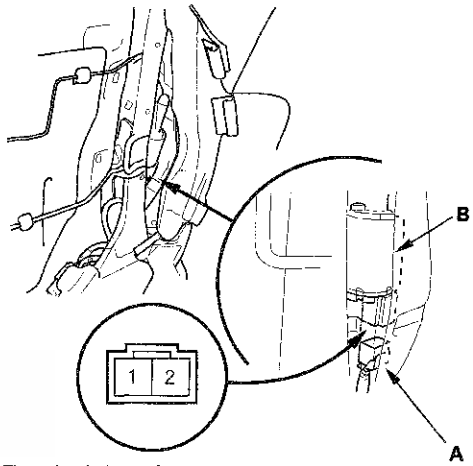

Terminal side of male termials

3. Test the motor by applying battery power and body ground to the terminals.

Terminal / Position	1	2
Forward	⊖	⊕
Backward	⊕	⊖

4. If the motor does not run or fails to run smoothly, replace it (see page 20-188).

Seat Heaters

Component Location Index

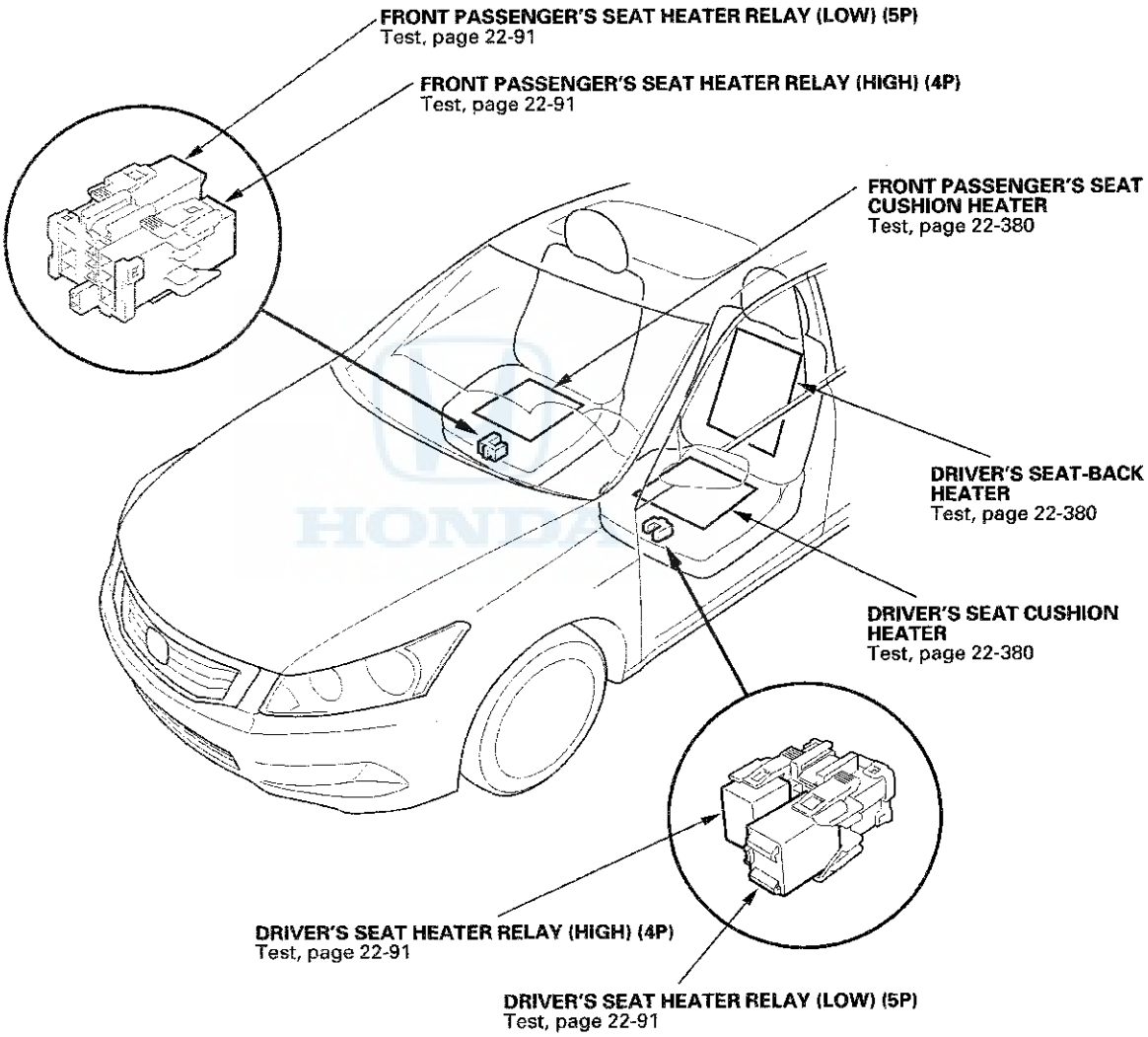

(cont'd)

Component Location Index (cont'd)

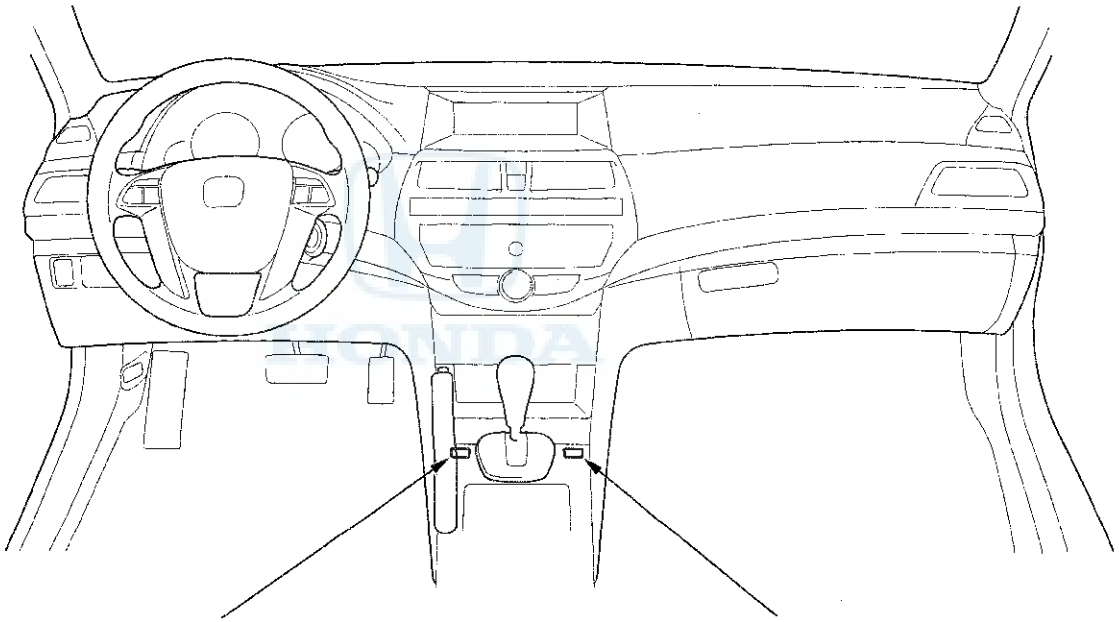

DRIVER'S SEAT HEATER SWITCH
Test/Replacement, page 22-381

FRONT PASSENGER'S SEAT HEATER SWITCH
Test/Replacement, page 22-381

HONDA

Seat Heaters

Circuit Diagram

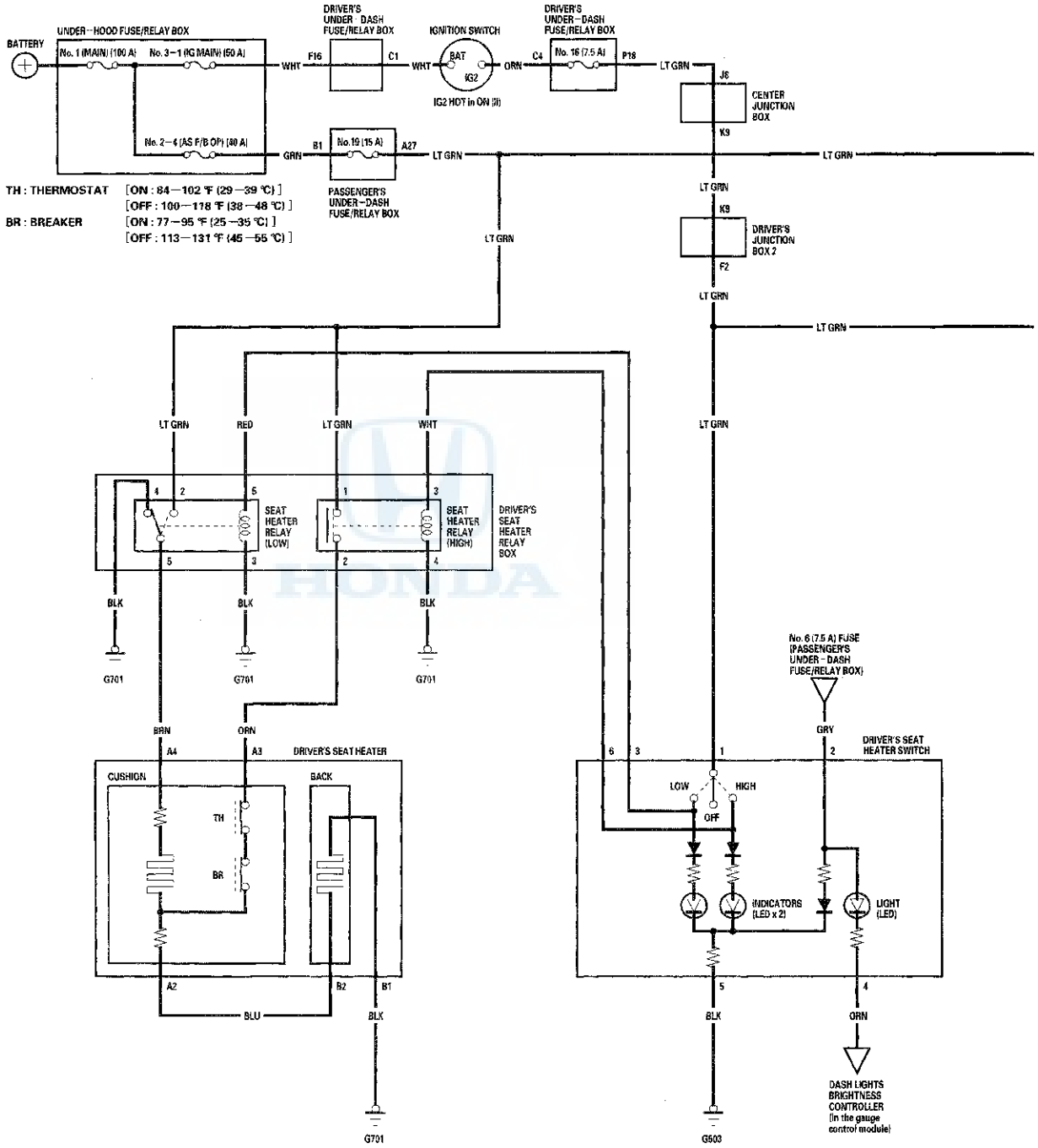

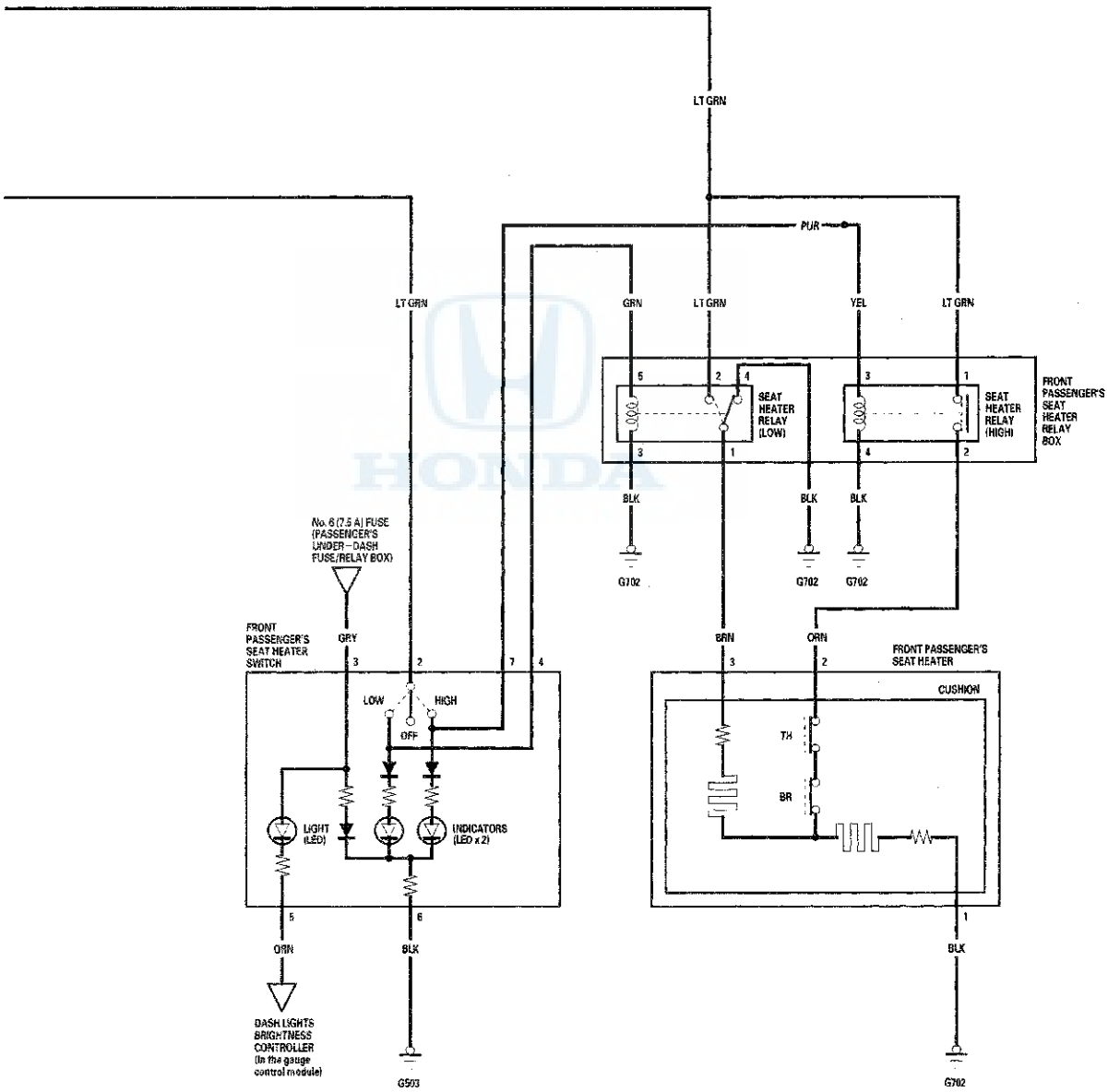
LT GRN
PUR
LT GRN
GRN
LT GRN
YEL
LT GRN
SEAT HEATER RELAY (LOW)
SEAT HEATER RELAY (HIGH)
FRONT PASSENGER'S SEAT HEATER RELAY BOX
BLK
BLK
BLK
G702
G702
G702
No. 6 (7.5 A) FUSE (PASSENGER'S UNDER-DASH FUSE/RELAY BOX)
FRONT PASSENGER'S SEAT HEATER SWITCH
GRY
BRN
ORN
FRONT PASSENGER'S SEAT HEATER
CUSHION
LOW
HIGH
OFF
TH
BR
LIGHT (LED)
INDICATORS (LED x 2)
ORN
BLK
BLK
DASH LIGHTS BRIGHTNESS CONTROLLER (In the gauge control module)
G503
G702

Seat Heater Test

Driver's Seat

1. Remove the driver's seat (see page 20-181).
2. Remove the seat-back (see page 20-199).
3. Disconnect the connector A (4P) and connector B (2P) from the seat heaters.

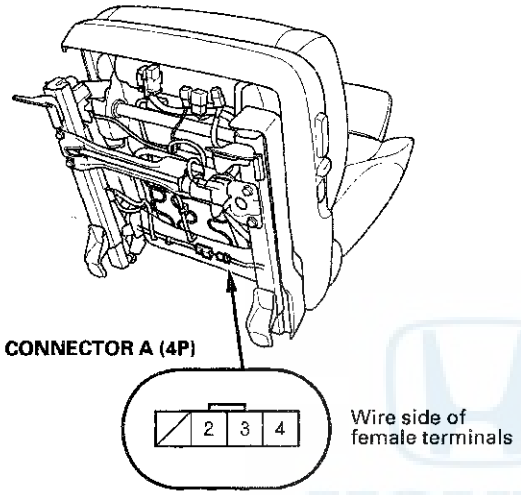

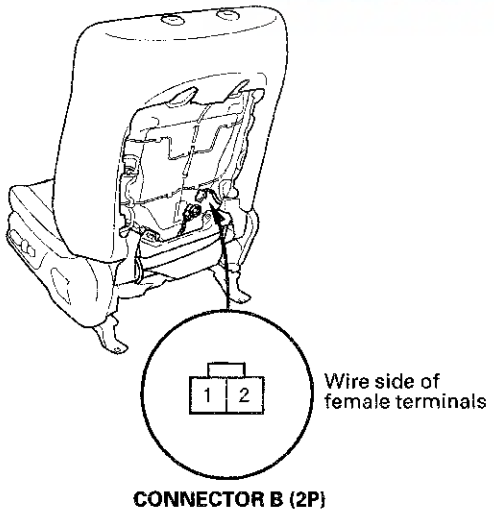

4. Check for continuity between the seat heater connector B (2P) terminals No. 1 and No. 2. There should be continuity.
5. If the continuity is not as specified, replace the seat-back heater.
6. Reconnect seat heater connector B (2P) to the seat-back heater.
7. Check for continuity between the seat heater connector A (4P) terminals No. 2 and No. 3, and terminals No. 3 and No. 4. There should be continuity.
8. If the continuity is not as specified, replace the seat cushion heater.

Front Passenger's Seat

1. Remove the front passenger's seat (see page 20-181).

2. Disconnect the 3P connector (A) from the seat heater.

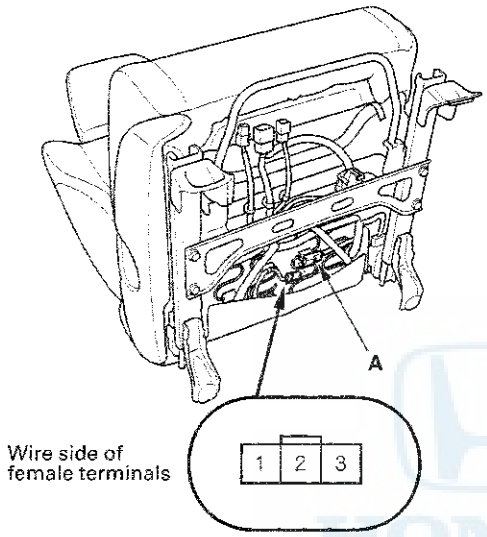

3. Check for continuity between the seat heater 3P connector terminals No. 1 and No. 3 and terminals No. 2 and No. 3. There should be continuity.

4. If the continuity is not as specified, replace the seat heater.

Switch Test/Replacement

1. Remove the center console panel (see page 20-146).

2. Disconnect the 6P (or 7P*) connector from the seat heater switch, then remove the switch.
   * : Front passenger's seat heater switch

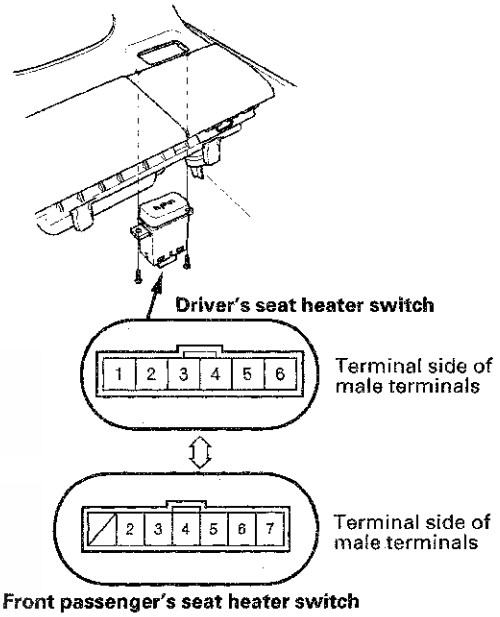

3. Check for continuity between the terminals in each switch position according to the table.

   NOTE: Make sure the correct test lead (+ or −) is placed on the terminal.

Position \ Terminal		1 [2]	2 [3]	3 [4]		4 [5]	5 [6]	6 [7]
ON	HIGH	○						○
		⊕			▶ ⊗		⊖	
			⊕		⊗	⊖		
			⊕		▶		⊖	
	LOW	○	○					
		⊕			▶ ⊗		⊖	
			⊕		⊗	⊖		
			⊕		▶		⊖	
OFF			⊕		⊗ ▶	⊖		
			⊕		▶		⊖	

[ ] : **Front passenger's seat heater switch**

4. If the continuity is not as specified, replace the switch.

Rear Window Defogger

Component Location Index

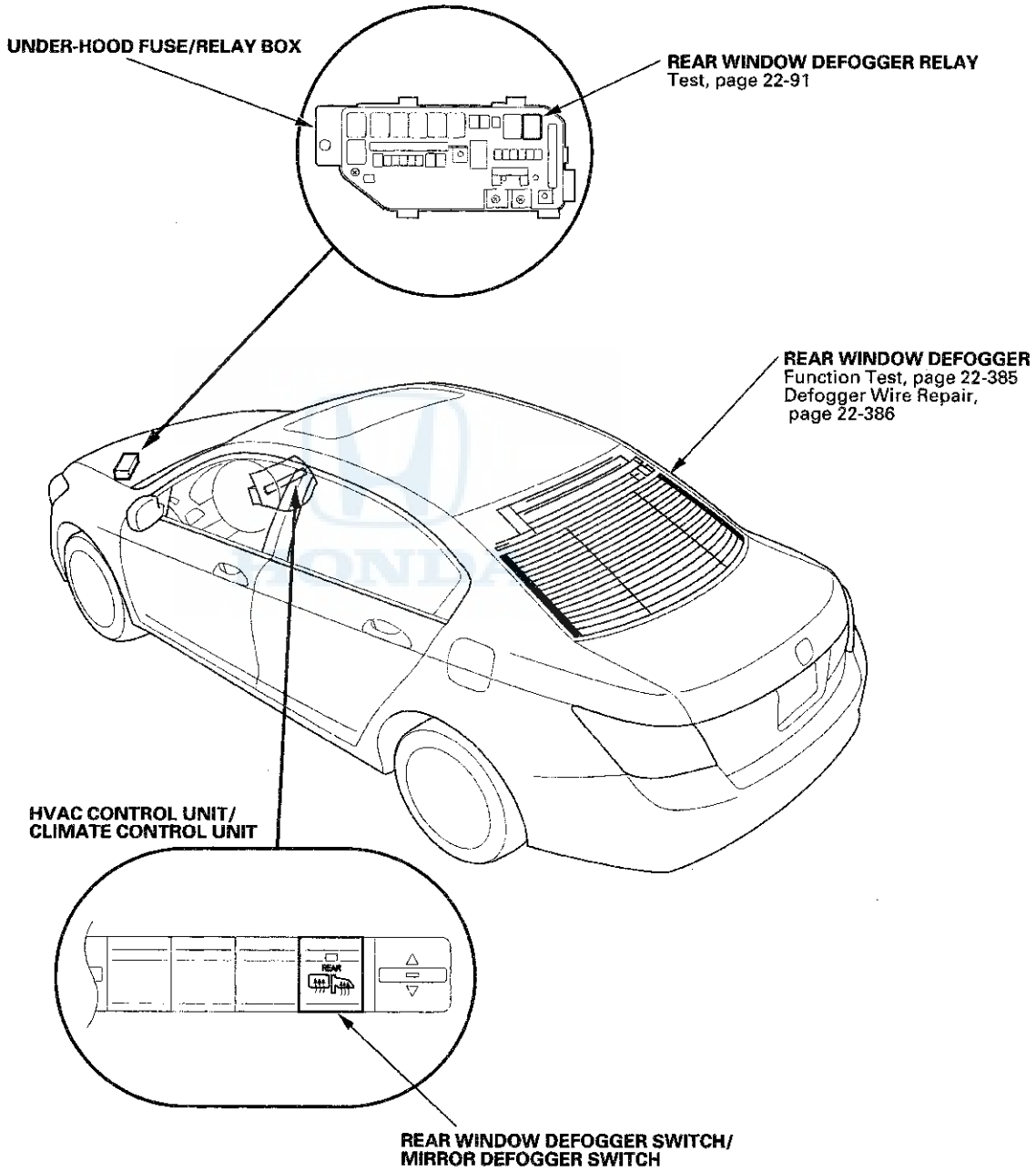

Circuit Diagram

With climate control unit

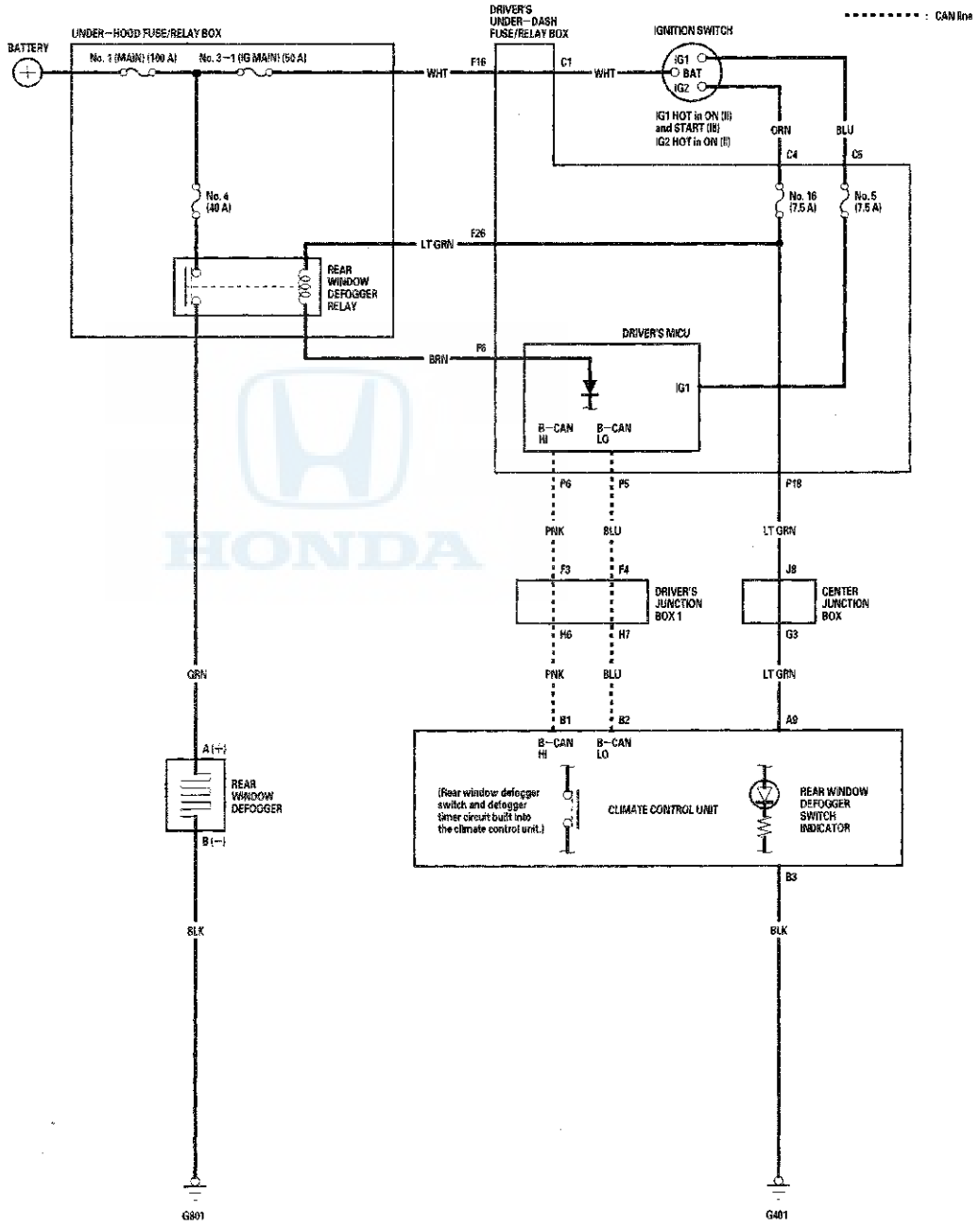

Circuit Diagram (cont'd)

With HVAC control unit

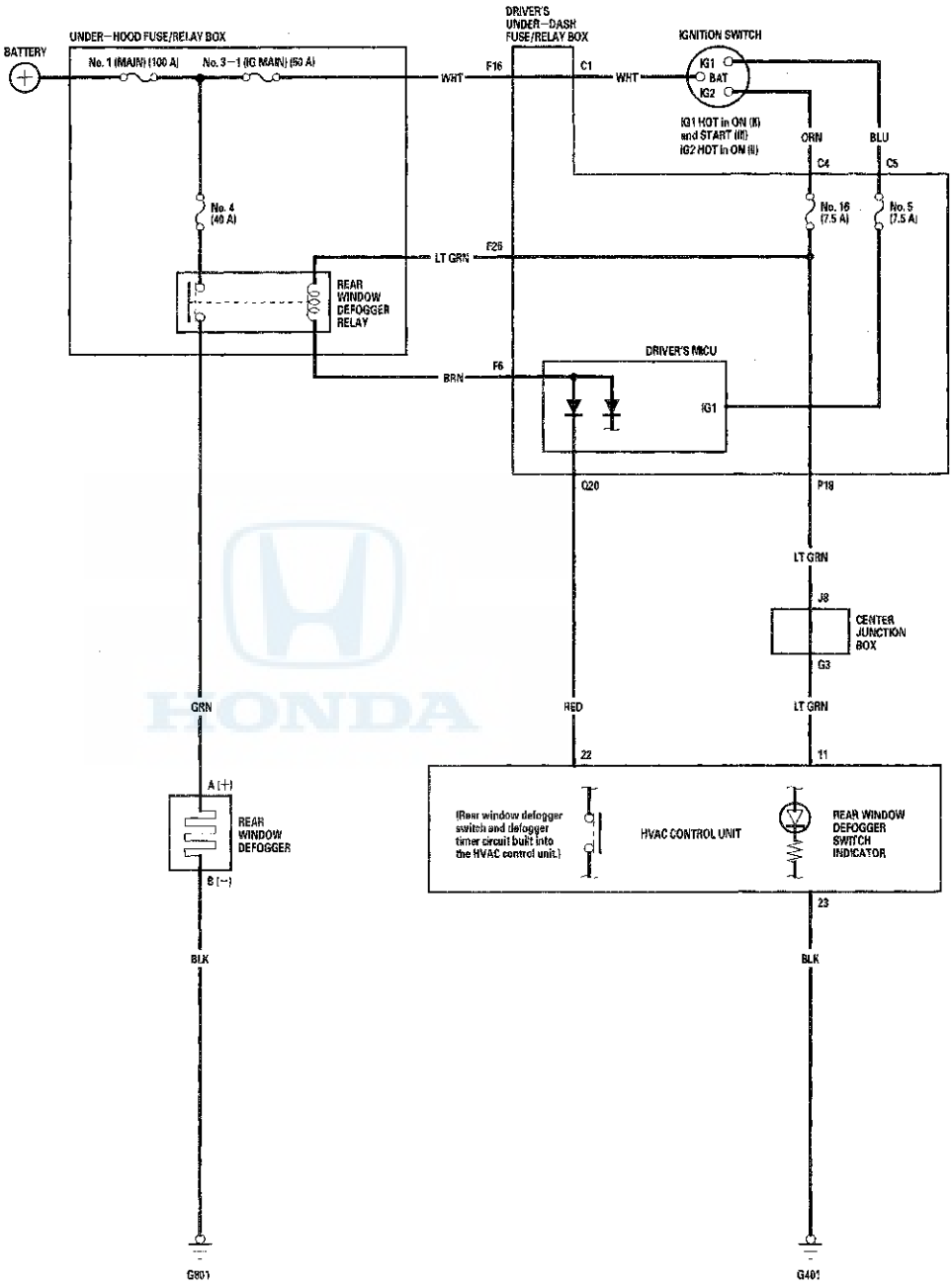

Function Test

NOTE:
- With climate control: Before testing, troubleshoot the B-CAN System Diagnosis Test Mode A (see page 22-120).
- Before testing, check the No. 4 (40 A) fuse in the under-hood fuse/relay box and the No. 16 (7.5 A) fuse in the driver's under-dash fuse/relay box.
- Be careful not to scratch or damage the defogger wires with the tester probe.

1. Turn the ignition switch to ON (II), then turn the rear window defogger switch ON.

2. Measure the voltage between the positive terminal (A) and body ground. There should be battery voltage.

   - If there is no voltage, check for:
     - Faulty rear window defogger relay.
     - Faulty climate control unit or HVAC control unit.
     - An open in the GRN wire to the positive terminal.
   - If there is voltage, go to step 3.

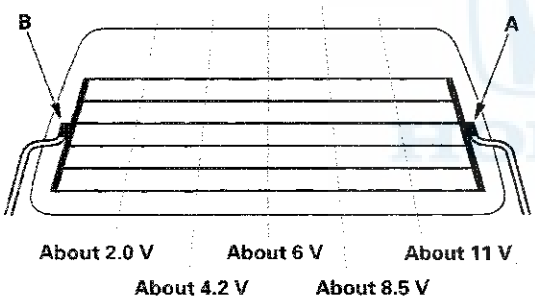

3. Turn the ignition switch to LOCK (0).

4. Disconnect the negative terminal (B) from the rear window defogger.

5. Check for continuity between the negative terminal (B) and body ground. There should be continuity.

   If there is no continuity, check for an open in the BLK wire or poor ground (G801). If there is continuity, go to step 6.

6. Reconnect the negative terminal to the rear window defogger.

7. Turn the ignition switch to ON (II), then turn the rear window defogger switch ON.

8. Touch the voltmeter positive probe to each point on each defogger wire, and the negative probe to the negative terminal.

   - If the voltage is as specified, the defogger wire up to that point is OK.
   - If the voltage is not as specified, repair the defogger wire.
     - If it is more than specified at one of the points, there is a break in the negative half of the wire.
     - If it is less than specified at one of the points, there is a break in the positive half of the wire.

Defogger Wire Repair

NOTE: To make an effective repair, the broken section must be no longer than 1 inch (25 mm).

1. Lightly rub the area around the broken section (A) with fine steel wool, then clean it with isopropyl alcohol.

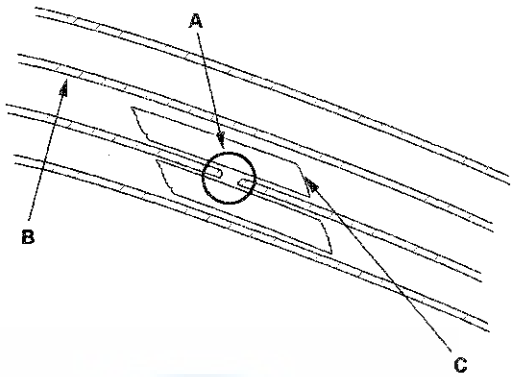

2. Carefully mask above and below the broken portion of the defogger wire (B) with cellophane tape (C).

3. Using a small brush, apply a heavy coat of silver conductive paint (commercially available) (A) extending about 1/8" on both sides of the break. Allow 25 minutes to dry.

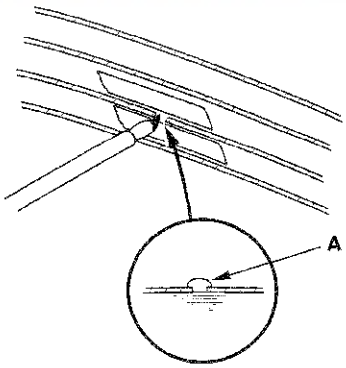

4. Do the function test to confirm that the wire is repaired.

5. Apply a second coat of paint in the same way. Let it dry 3 hours before removing the tape.

Immobilizer System

Component Location Index

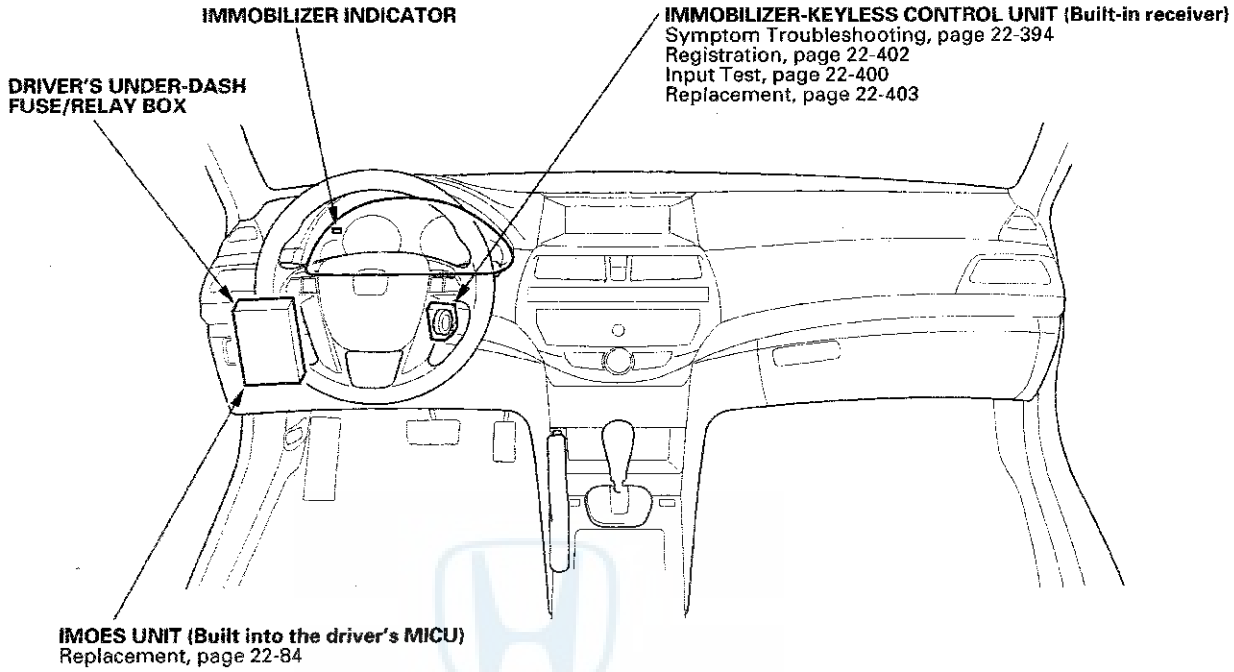

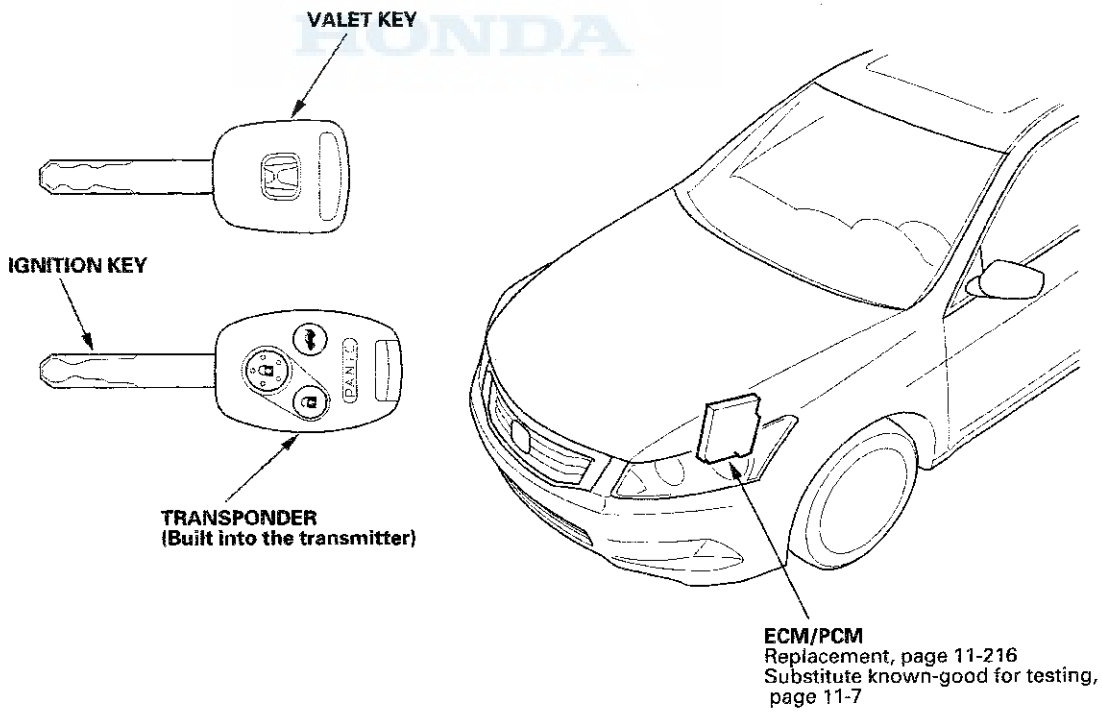

Immobilizer System

System Description

The vehicle is equipped with a Type VII immobilizer system that will disable the vehicle unless a programmed ignition key is used.
This system consists of a transponder combined with a keyless transmitter, an immobilizer-keyless control unit, the driver's MICU (has built-in imoes unit), an immobilizer indicator, and the ECM/PCM.
When the immobilizer key (programmed by the HDS) is inserted into the ignition switch and turned to ON (II), the immobilizer-keyless control unit sends power to the transponder. The transponder then sends a coded signal back to the immobilizer-keyless control unit which then sends a coded signal to the ECM/PCM and the driver's MICU (imoes unit).
The ECM/PCM and driver's MICU (imoes unit) identify this coded signal, then voltage is supplied to the fuel pump.

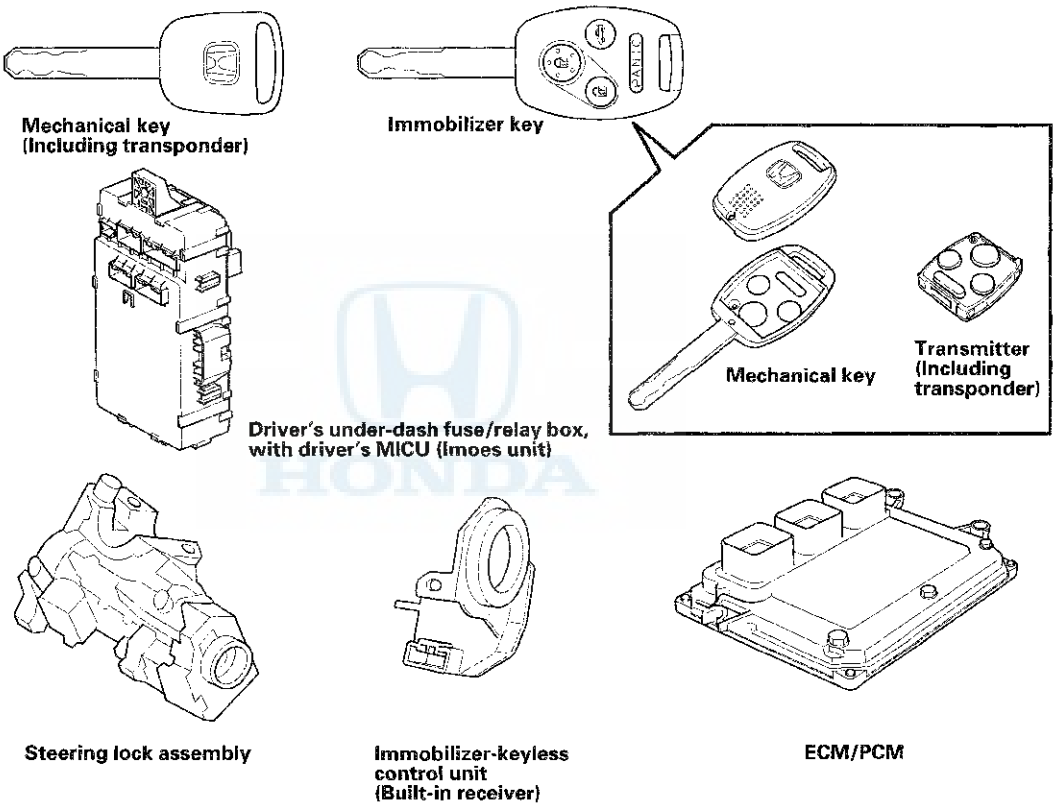

If the wrong key has been used or the code was not received or recognized by the unit, the indicator will flash once, then it will blink until the ignition switch is turned to LOCK (0). When the ignition switch is turned to the LOCK (0) position, the indicator will blink ten times to signal that unit has reset correctly, then the indicator will go off.

Circuit Diagram

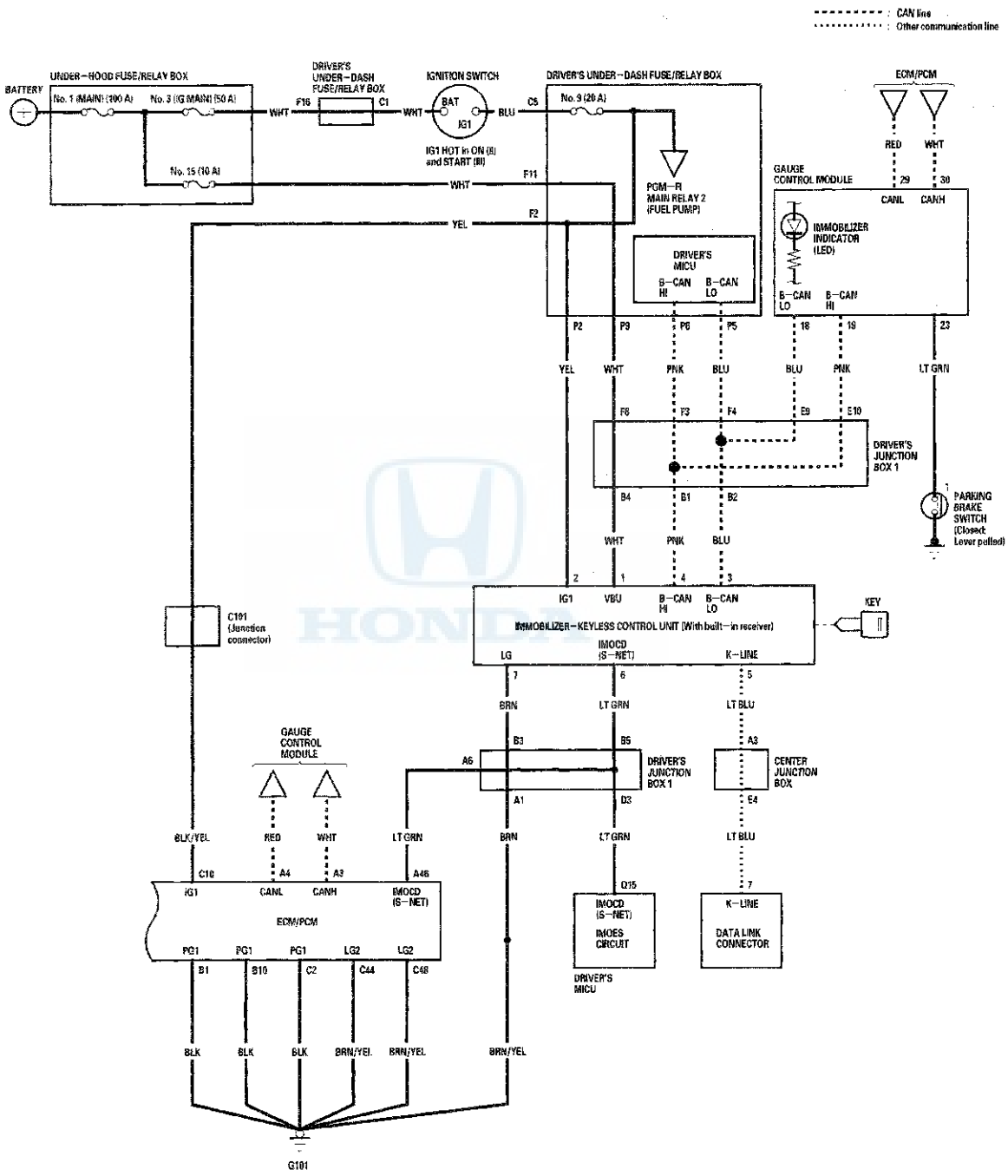

DTC Troubleshooting

DTC U0155: Immobilizer-keyless Control Unit Lost Communication with Gauge Control Module

NOTE: If you are troubleshooting multiple DTCs, be sure to follow the instructions in B-CAN System Diagnosis Test Mode A (see page 22-120).

1. Clear the DTCs with the HDS.
2. Turn the ignition switch to LOCK (0) and then back to ON (II).
3. Wait for 6 seconds or more.
4. Check for DTCs with the HDS.

   Is DTC U0155 indicated?

   YES—Go to the gauge control module input test, and do all power, ground, and communication input tests (see page 22-320). If the tests prove OK, replace the gauge control module. ■

   NO—Intermittent failure, the system is OK at this time. Check for loose or poor connections at the gauge control module and the related units. ■

DTC U0199: Immobilizer-keyless Control Unit Lost Communication with Door Multiplex Control Unit

NOTE: If you are troubleshooting multiple DTCs, be sure to follow the instructions in B-CAN System Diagnosis Test Mode A (see page 22-120).

1. Clear the DTCs with the HDS.
2. Turn the ignition switch to LOCK (0) and then back to ON (II).
3. Wait for 6 seconds or more.
4. Check for DTCs with the HDS.

   Is DTC U0199 indicated?

   YES—Go to the door multiplex control unit input test, and do all power, ground, and communication input tests (see page 22-262). If the tests prove OK, replace the power window master switch. ■

   NO—Intermittent failure, the system is OK at this time. Check for loose or poor connections at the door multiplex control unit and the related units. ■

DTC U1282: Immobilizer-keyless Control Unit Lost Communication with Driver's MICU

NOTE: If you are troubleshooting multiple DTCs, be sure to follow the instructions in B-CAN System Diagnosis Test Mode A (see page 22-120).

1. Clear the DTCs with the HDS.

2. Turn the ignition switch to LOCK (0) and then back to ON (II).

3. Wait for 6 seconds or more.

4. Check for DTCs with the HDS.

   Is DTC U1282 indicated?

   YES—Go to the driver's MICU input test, and do all power, ground, and communication input tests (see page 22-138). If the tests prove OK, replace the driver's under-dash fuse/relay box. ■

   NO—Intermittent failure, the system is OK at this time. Check for loose or poor connections at driver's under-dash fuse/relay box connector P (20P) and the related units. ■

Symptom Troubleshooting Information

General Check Before Troubleshooting

Before troubleshooting the immobilizer system, check the following general items and solve any if applicable:

- The battery is low; charge the battery fully, then troubleshoot the immobilizer system.
- The ignition key is not a genuine Honda part; use a Honda-approved key blank, register the key, then troubleshoot the immobilizer system.
- A key ring, keys, or a key case is used; remove the key from it, and troubleshoot the immobilizer system with a key only.
- An aftermarket electrical part is attached; remove it, then troubleshoot the immobilizer system.

Symptom Troubleshooting Using the Immobilizer Indicator Lighting Pattern

The pattern of the immobilizer indicator can help troubleshoot the condition of the immobilizer system. Here are descriptions of the four possible patterns:

Normal operation
If the immobilizer code is identified, the immobilizer indicator quickly flashes once when the ignition switch is turned to ON (II).
The immobilizer indicator does not come on when the ignition switch is turned to LOCK (0).

Immobilizer code is not identified
If the immobilizer code is not identified, the immobilizer indicator will quickly flash once, then will blink until the ignition switch is turned to LOCK (0). When the ignition switch is turned to LOCK (0), the indicator will blink ten times, then go OFF.
The state of the immobilizer key registration and the IMOCD (S-NET) line can be checked by doing a SYSTEM CHECK and STATUS LOG CHECK with the HDS (see page 22-397).

Immobilizer indicator does not come on
If the immobilizer indicator does not come on after turning the ignition switch to ON (II), there is an open or short in the F-CAN lines between the ECM/PCM and the gauge control module. Watch the malfunction indicator lamp (MIL). If the MIL stays on, go to the PGM-FI system troubleshooting (see page 11-62).

Immobilizer indicator does not go off
If the immobilizer indicator does not go off after turning the ignition switch to ON (II), do the gauge control module self-diagnostic function (see page 22-304). If the indicator drive circuit is OK, do the SYSTEM CHECK and STATUS LOG CHECK with the HDS.

Symptom Troubleshooting Using Malfunctioning Circuit Functions

If a malfunction occurs in the immobilizer circuit, use the table to cross-reference the malfunction criteria to the line(s) that should be checked table:

Line Error / Function		Immobilizer Indicator	Engine Start	Key Registration	Tester Communication	Keyless Operation
Terminal No. (Wire Color)	Cause of Malfunction					
1 (WHT)	VBU line open or short	Comes on, then goes off.	Possible	Impossible	Possible	Impossible
2 (YEL)	IG1 line open or short	Blinking	Impossible	Impossible	Impossible	Possible
3 (BLU)	B-CAN line open or short	Comes on, then goes off.	Possible	Impossible	Immobilizer: Possible Keyless: Impossible	Impossible
4 (PNK)	B-CAN line open or short	Comes on, then goes off.	Possible	Impossible	Immobilizer: Possible Keyless: Impossible	Impossible
5 (LT BLU)	K-LINE line open or short	Comes on, then goes off.	Possible	Impossible	Impossible	Possible
6 (LT GRN)	IMOCD (S-NET) line open or short	Blinking	Impossible	Impossible	Impossible	Possible
7 (BRN)	GND (LG) line open	Blinking	Impossible	Impossible	Impossible	Impossible

System Check and Status Log

NOTE: The HDS can be used to:
- Check the state of the immobilizer key registration and the IMOCD (S-NET) line by doing a SYSTEM CHECK.
- Check the number of times the immobilizer control unit-receiver doesn't permit the engine to run by checking the STATUS LOG.

1. Connect the HDS to the data link connector, then turn the ignition switch to ON (II) and follow the prompts to the MAIN MENU.

   NOTE: If the HDS does not communicate with the vehicle, go to the DLC circuit troubleshooting (see page 11-192).

2. At MAIN MENU, enter IMMOBILIZER, then select IMMOBILIZER SETUP.

3. Do the SYSTEM CHECK. If there is a system check number, do the troubleshooting for the item indicated.

4. Check the STATUS LOG using the HDS. Troubleshoot the line with the highest counts first. If all the lines are 0 (zero), the problem may not be caused by the immobilizer system, check for ignition or fuel problems.

   NOTE: Once repaired, clear the status log by removing the No. 15 (10 A) fuse in the under-hood fuse/relay box or disconnecting the battery.

Symptom Troubleshooting

1. Troubleshoot the immobilizer system by the order of the priority shown:

Order of Priority	Symptom	Possible cause
1	Immobilizer indicator blinks after the ignition switch is turned to LOCK (0).	Symptom troubleshooting (see page 22-395).
2	Engine does not start with the immobilizer key.	Symptom troubleshooting (see page 22-396).
3	Immobilizer indicator does not come on.	Check the MIL indication. If the MIL comes on, go to the PGM-FI System MIL circuit troubleshooting (see page 11-191).
4	Immobilizer indicator does not go off.	Symptom troubleshooting (see page 22-396).

HONDA

Immobilizer indicator blinks

NOTE: Before troubleshooting, check the items listed in "General Check before Troubleshooting".

1. Turn the ignition switch to LOCK (0).

2. Connect the HDS, then turn the ignition switch to ON (II).

3. From the main menu, enter IMMOBILIZER, then select the IMMOBILIZER SETUP.

4. Select the SYSTEM CHECK.

   Is the SYSTEM CHECK indicated?

   YES—Troubleshoot the immobilizer system according to the result of the SYSTEM CHECK (see page 22-397).■

   NO—Go to step 5.

5. Turn the ignition switch to LOCK (0).

6. Enter the vehicle, and remove the ignition key from the ignition switch, then close the all doors.

7. Operate the keyless transmitter LOCK and UNLOCK several times in the vehicle.

   Do the door lock actuators work normally?

   YES—Go to step 8.

   NO—Check for a poor ground and/or an open in the wire between the immobilizer-keyless control unit 7P connector terminal No. 7 and body ground (G101).■

8. Turn the ignition switch to ON (II).

9. Back-probe and measure the voltage between the immobilizer-keyless control unit 7P connector terminal No. 2 and body ground.

IMMOBILIZER-KEYLESS CONTROL UNIT 7P CONNECTOR

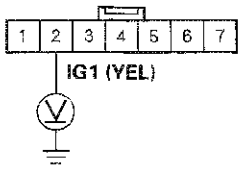

Wire side of female terminals

Is there battery voltage?

YES—Go to step 10.

NO—Check for a blown No. 9 (20 A) fuse in the driver's under-dash fuse/relay box. If the fuse is OK, repair open in the YEL wire between the driver's under-dash fuse/relay box and the immobilizer-keyless control unit.■

10. Back-probe and measure the voltage between the immobilizer-keyless control unit 7P connector terminal No. 7 and body ground.

IMMOBILIZER-KEYLESS CONTROL UNIT 7P CONNECTOR

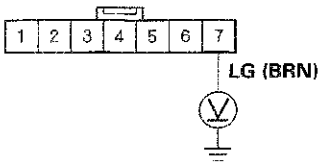

Wire side of female terminals

Is there 0.5 V or more?

YES—Repair poor connection or open between the immobilizer-keyless control unit 7P connector terminal No. 7 and G101.■

NO—Replace the immobilizer-keyless control unit (see page 22-403).■

Symptom Troubleshooting (cont'd)

Engine does not start with the immobilizer key

NOTE: Before troubleshooting, check the items listed in "General Check before Troubleshooting" (see page 22-392).

1. Try to start the engine.

   Does the engine start?

   YES—Intermittent failure, the vehicle is OK at this time. Check status log (see page 22-399). ■

   NO—Go to step 2.

2. Turn the ignition switch to LOCK (0).

3. Turn the ignition switch to ON (II), and check the immobilizer indicator.

   Does the indicator blink once, then stay off?

   YES—Go to step 4.

   NO—Go to the immobilizer indicator blinks troubleshooting (see page 22-395). ■

4. Turn the ignition switch to START (III).

   Does the starter motor run?

   YES—Go to step 5.

   NO—Go to Starting System, and check the starter motor (see page 4-10). ■

5. Try to start the engine with the immobilizer key.

   Does the engine start?

   YES—Go to step 6.

   NO—Go to the PGM-FI System Symptom Troubleshooting (see page 11-3). ■

6. Wait for a few minutes with the engine running.

   Does the engine stop?

   YES—Go to the PGM-FI System Symptom Troubleshooting (see page 11-3). ■

   NO—The system is OK at this time. ■

Immobilizer indicator does not go off

1. Turn the ignition switch to LOCK (0).

2. Connect the HDS to the data link connector.

3. Turn the ignition switch to ON (II).

4. From the main menu, enter IMMOBILIZER, then select IMMOBILIZER setup, then select System Check, Number of Keys, and Status Log.

5. Do the SYSTEM CHECK with the HDS.

   Is N-1 OK indicated?

   YES—Replace the gauge control module (see page 22-324). ■

   NO—Substitute a known-good immobilizer-keyless control unit, then register it and recheck. If the symptom goes away, replace the original immobilizer-keyless control units (see page 22-403). ■

System Check

1. Connect the HDS to the data link connector.
2. Turn the ignition switch to ON (II).
3. Monitor the SYSTEM CHECK in the IMMOBILIZER INFO with the HDS.
4. If the HDS displays NORMAL N-1, the immobilizer system is OK at this time, refer to the STATUS LOG. If the HDS displays any other messages, check as follows:

System Check No.	System Check	Possible Cause
A-1	The key is not registered	• This key is not registered in the immobilizer-keyless control unit. Try to register keys using the HDS. • No communication between the antenna and the immobilizer key because of interference from metal such as key chains/key rings/other keys. • Low battery voltage.
A-2	Communication error between the key and immobilizer unit	• Intermittent interruption between transponder and immobilizer-keyless control unit. • The immobilizer key type is incorrect non-Honda key. • Key failure (transponder failure) • No communication between the antenna and the immobilizer key because of interference from metal such as key chains/key rings/other keys. • Low battery voltage.
A-3	No communication between the key and immobilizer unit	• The ignition switch was turned ON (II) with a non-immobilizer key. • The immobilizer key type is incorrect non-Honda key. • Key failure (transponder failure) • No communication between the antenna and the immobilizer key because of interference from metal such as key chains/key rings/other keys. • Low battery voltage. • Immobilizer-keyless control unit failure
B-1	The ECM/PCM is not registered	• The ECM/PCM was not registered. Try to register the ECM/PCM using the HDS. • No communication between the ECM/PCM and the immobilizer-keyless control unit because of low battery voltage. • No communication between the immobilizer-keyless control unit and the ECM/PCM because of interference. • Open in the IG1 line
B-2	Error of communication format in ECM/PCM	• The ECM/PCM was not registered. Try to register the ECM/PCM using the HDS. • No communication between the ECM/PCM and the immobilizer-keyless control unit because of low battery voltage. • No communication between the immobilizer-keyless control unit and the ECM/PCM because of interference.

(cont'd)

System Check (cont'd)

System Check No.	System Check	Possible Cause
C-1	No registration of imoes unit	• Imoes unit was not registered. • No communication between the imoes unit and the immobilizer-keyless control unit because of low battery voltage. • No communication between the imoes unit and the immobilizer-keyless control unit because of interference.
C-2	Error of communication format in imoes unit	• Imoes unit was not registered. • No communication between the imoes unit and the immobilizer-keyless control unit because of low battery voltage. • No communication between the imoes unit and the immobilizer-keyless control unit because of interference.
D-1	IMOCD (S-NET) line short	• Harness short from the ECM/PCM to the immobilizer-keyless control unit. (IMOCD (S-net) line short) • No communication between the ECM/PCM and the immobilizer-keyless control unit because of low battery voltage. • No communication between the immobilizer-keyless unit and the ECM/PCM because of interference. • Immobilizer-keyless control unit failure • ECM/PCM failure
D-2	No communication between imoes unit and immobilizer unit	• Blown fuse • Harness open from the imoes unit to the immobilizer-keyless control unit. (IMOCD (S-net) line open) • No communication between the imoes unit and the immobilizer-keyless control unit because of low battery voltage. • No communication between the imoes unit and the immobilizer-keyless control unit because of interference. • Immobilizer-keyless control unit failure • Imoes unit failure
D-3	No communication between ECM/PCM and immobilizer unit	• Blown fuse • Harness open from the ECM/PCM to the immobilizer-keyless control unit. • No communication between the ECM/PCM and the immobilizer-keyless control unit because of low battery voltage. • No communication between the immobilizer-keyless control unit and the ECM/PCM because of interference. • Immobilizer-keyless control unit failure • ECM/PCM failure
E-1	Initial registration of immobilizer unit is not completed	The immobilizer-keyless control unit is not registered. Try to register the immobilizer-keyless control unit using the HDS.
E-2		
E-3		
E-4		
E-5		
F-1	Special Mode	Turn the ignition switch to ON (II) and to LOCK (0) with the registered key.
F-2		
F-3		
F-4		
F-5		

Status Log

If you suspect there is a immobilizer system problem, check the status log.

1. Connect the HDS to the data link connector.
2. Turn the ignition switch to ON (II).
3. On the HDS screen, at MAIN MENU, enter IMMOBILIZER, then select IMMOBILIZER SET-UP, select SYSTEM CHECK, Number of Keys and Status Log, then select STATUS LOG.
4. Check the STATUS LOG count. Troubleshoot the status with the highest count first. If no counts are listed, the immobilizer system is OK. Continue with normal symptom troubleshooting.

Status Log No.	Detected Item	Probable Cause
A-1	KEY CODE MISMATCH (Code format normal, but code data is mismatch)	• The key was not registered • Interference from metal such as key chains • Low battery voltage
A-2	KEY CODE MISMATCH (Code format failure)	• Ignition switch was turned to ON (II) with another type of immobilizer key or aftermarket key • Interference from metal such as key chains • Low battery voltage
A-3	KEY CODE MISMATCH (No key code or non-immobilizer key)	• Ignition switch was turned to ON (II) with another type of immobilizer key or aftermarket key • Interference from metal such as key chains • Low battery voltage • Key failure • Immobilizer-keyless control unit failure
B-1	ECM/PCM CODE MISMATCH (Code format normal, but code data is mismatch)	• ECM/PCM was not registered correctly • Low battery voltage • Poor or loose terminal connections at the immobilizer-keyless control unit • Communication line electrical noise
B-2	ECM/PCM MISMATCH (Code format failure)	• ECM/PCM was not registered correctly • Low battery voltage • Poor or loose terminal connections at the immobilizer-keyless control unit • Communication line electrical noise
C-1	IMOES UNIT mismatch (Code format nomal, but data is mismatch)	• Imoes unit was not registered • The communication was not good between imoes unit and immobilizer-keyless control unit by battery voltage low • The communication was not good between imoes unit and immobilizer-keyless control unit by influence of some noise
C-2	IMOES UNIT mismatch (Code format failure)	• Imoes unit was not registered correctly • The communication was not good between imoes unit and immobilizer-keyless control unit by battery voltage low • The communication was not good between imoes unit and immobilizer-keyless control unit by influence of some noise
D-1	SECURITY-NET LINE PROBLEM IMOCD (S-NET) (Short to ground)	• Low battery voltage • Poor or loose terminal connections at the immobilizer-keyless control unit and the ECM/PCM • Communication line electrical noise
D-2	SECURITY-NET LINE PROBLEM (No communication)	• Blown fuse • Harness open from imoes unit to immobilizer unit • The communication was not good between imoes unit and immobilizer-keyless control unit by battery voltage low • The communication was not good between imoes unit and immobilizer-keyless control unit by influence of some noise • Imoes unit failure • Immobilizer-keyless control unit failure
D-3	SECURITY-NET LINE PROBLEM IMOCD (S-NET) (Open line or ECM/PCM failure)	• Open or short in the harness from the ECM/PCM to the immobilizer-keyless control unit • Low battery voltage • Poor or loose terminal connections at the immobilizer-keyless control unit and the ECM/PCM • Communication line electrical noise

Immobilizer-keyless Control Unit Input Test

NOTE: Before testing, troubleshoot the multiplex integrated control unit first, using B-CAN System Diagnosis Test Mode A (see page 22-120).

1. Remove the dashboard lower cover (see page 20-153).
2. Remove the steering column covers (see page 20-168).
3. Disconnect the 7P connector (A) from the immobilizer-keyless control unit (B).

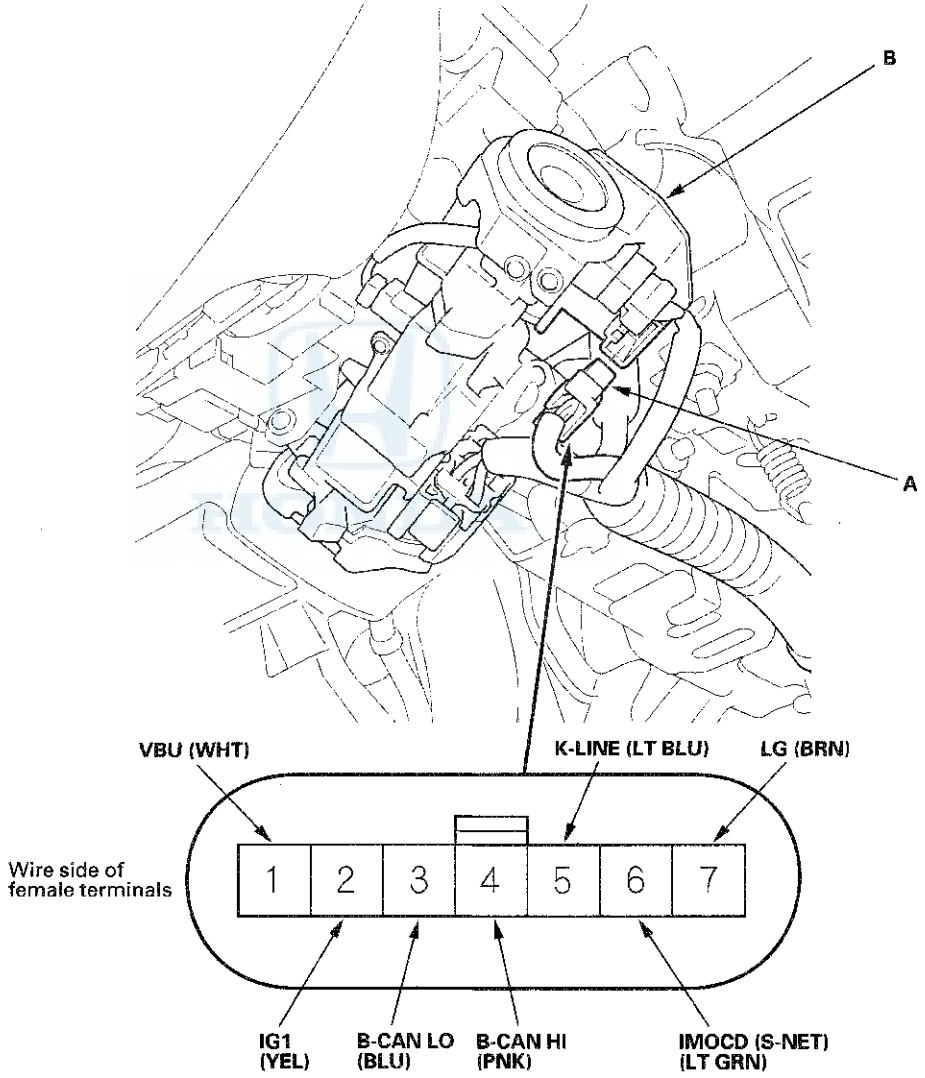

4. Inspect the connector and socket terminals to be sure they are all making good contact.
   - If the terminals are bent, loose or corroded, repair them as necessary, and recheck the system.
   - If the terminals look OK, go to step 5.

5. With the connector still disconnected, make these input tests at the connector.

- If any test indicates a problem, find and correct the cause, then recheck the system.
- If all the input tests prove OK, go to step 6.

Cavity	Wire	Terminal name	Test condition	Test: Desired result	Possible cause if desired result is not obtained
3	BLU	B-CAN LO	Disconnect the gauge control module 32P connector	Check for continuity between the terminal and the gauge control module 32P connector terminal No. 18: There should be continuity.	An open in the wire
			Disconnect driver's under-dash fuse/relay box connector P (20P)	Check for continuity between the terminal and driver's under-dash fuse/relay box connector P (20P) terminal No. 5: There should be continuity.	An open in the wire
4	PNK	B-CAN HI	Disconnect the gauge control module 32P connector	Check for continuity between the terminal and the gauge control module 32P connector terminal No. 19: There should be continuity.	An open in the wire
			Disconnect driver's under-dash fuse/relay box connector P (20P)	Check for continuity between the terminal and driver's under-dash fuse/relay box connector P (20P) terminal No. 6: There should be continuity.	An open in the wire
6	LT GRN	IMOCD (S-NET)	Disconnect ECM/PCM connector A (49P) (see page 11-3)	Measure the voltage to ground: There should be about 5 V.	• A short to ground in the wire • An open in the wire
			Disconnect the battery negative terminal	Measure the resistance between the terminal and body ground: There should be more than 50 kΩ.	• Faulty imoes unit • Faulty driver's under-dash fuse/relay box • An open in the wire
			Disconnect ECM/PCM connector A (49P) (see page 11-3)	Check for continuity between the terminal and ECM/PCM connector A (49P) terminal No. 46: There should be continuity.	An open in the wire

6. Reconnect the connector to the immobilizer-keyless control unit, and make these input tests at the connector.

- If any test indicates a problem, find and correct the cause, then recheck the system.
- If all the input tests prove OK, replace the immobilizer-keyless control unit (see page 22-403).

NOTE: After replacing the immobilizer-keyless control unit, do the immobilizer registration (see page 22-402).

Cavity	Wire	Terminal name	Test condition	Test: Desired result	Possible cause if desired result is not obtained
1	WHT	VBU	Under all conditions	Measure the voltage to ground: There should be battery voltage.	• Blown No. 15 (10 A) fuse in the under-hood fuse/relay box • An open in the wire
2	YEL	IG1	Ignition switch ON (II)	Measure the voltage to ground: There should be battery voltage.	• Blown No. 9 (20 A) fuse in the driver's under-dash fuse/relay box • An open in the wire
7	BRN	LG	Under all conditions	Measure the voltage to ground: There should be less than 0.2 V.	• Poor ground (G101) • An open in the wire
5	LT BLU	K-LINE	Under all conditions	Measure the voltage to ground: There should be 9—12 V.	• Faulty control unit on the K-line • Short to ground in the wire

Immobilizer Key Registration

NOTE:
- The HDS is required for registration of the immobilizer keys.
- Programming the immobilizer also programs the keyless transmitter.
- Check for aftermarket electrical equipment that can cause problems with transponder operation.
- The immobilizer-keyless control unit can store up to six immobilizer keys.

Add one new key/Keyless transmitter

1. Have a registered key, a new immobilizer key, and the first password from the iN system.
2. Connect the HDS to the data link connector.
3. Turn the ignition switch to ON (II).
4. Select IMMOBILIZER from the SYSTEM SELECT menu.
5. Select Add and Delete keys, then Add 1 key.
6. Do the registration according to the instructions on the HDS screen.
7. Check if the engine can be started by the newly registered key.
8. When prompted by the HDS, do the keyless transmitter programming.

Add and Delete keys/Keyless transmitters, Then select Delete or Add keys

1. Have all registered keys, all new keys, and the first password from the iN system.
2. Connect the HDS to the data link connector.
3. Turn the ignition switch to ON (II).
4. Select IMMOBILIZER from the SYSTEM SELECT menu.
5. Select Add and Delete Keys, or Delete or Add Multiple Keys.
6. Do the registration according to the instructions on the HDS screen.
7. Check if the engine can be started by all the registered keys.
8. When prompted by the HDS, do the keyless transmitter programming.

All keys are lost

1. Prepare all new keys and have the immobilizer PCM code.
2. Connect the HDS to the data link connector.
3. Turn the ignition switch to ON (II).
4. Select IMMOBILIZER from the SYSTEM SELECT menu.
5. Select Add and Delete keys, then ALL KEYS LOST.
6. Do the registration according to the instructions on the HDS screen.
7. Check if the engine can be started by all the registered keys.
8. When prompted by the HDS, do the keyless transmitter programming.

Immobilizer-keyless Control Unit Replacement

1. Remove the driver's dashboard lower cover (see page 20-153).

2. Remove the steering column covers (see page 20-168).

3. Disconnect the 7P connector (A) from the immobilizer-keyless control unit (B).

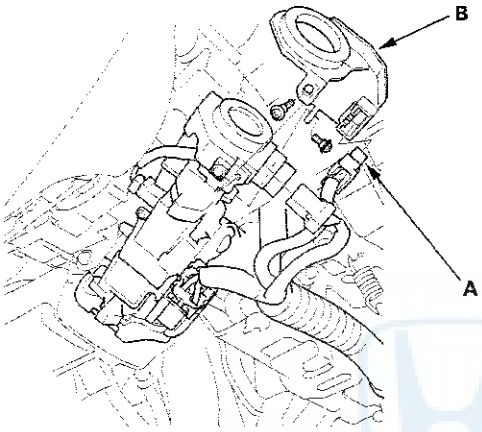

4. Remove the two screws and the immobilizer-keyless control unit.

5. Install the immobilizer-keyless control unit in the reverse order of removal.

6. After replacement, register the immobilizer-keyless control unit (see page 22-402), and make sure the immobilizer system works properly.

7. Program all of the customer's keys/keyless transmitters (see page 22-402).

SUPPLEMENTAL RESTRAINT SYSTEM (SRS) (If HVAC maintenance required)

The Accord SRS includes a driver's airbag in the steering wheel hub, a passenger's airbag in the dashboard above the glove box, seat belt tensioners in the front seat belt retractors, side curtain airbags in the sides of the roof, and side airbags in the front seat-backs. Information necessary to safely service the SRS is included in this Service Manual. Items marked with an asterisk (*) on the contents page include or are located near SRS components. Servicing, disassembling, or replacing these items requires special precautions and tools, and should be done by an authorized Honda dealer.

- To avoid rendering the SRS inoperative, which could lead to personal injury or death in the event of a severe frontal or side collision, all SRS service work should be done by an authorized Honda dealer.
- Improper service procedures, including incorrect removal and installation of the SRS, could lead to personal injury caused by unintentional deployment of the airbags, side airbags, and/or side curtain airbags.
- Do not bump or impact the SRS unit, front impact sensors, side impact sensors, or rear safing sensor when the ignition switch is in ON (II), or for at least 3 minutes after the ignition switch is turned to LOCK (0); otherwise, the system may fail in a collision, or the airbags may deploy.
- SRS electrical connectors are identified by yellow color coding. Related components are located in the steering column, front console, dashboard, dashboard lower panel, in the dashboard above the glove box, in the front seats, in the roof side, and around the floor. Do not use electrical test equipment on these circuits.

Navigation Tools: Click on the "Table of Contents" below, or use the Bookmarks to the left.

Audio, Navigation, and Telematics

Audio, Navigation, and Telematics
Special Tools 23-2

Audio System
Component Location Index 23-3
Symptom Troubleshooting Index 23-5
System Description 23-7
Circuit Diagram 23-36
Self-diagnostic Function 23-46
Error Codes 23-56
Symptom Troubleshooting 23-58
Sound Quality Diagnosis 23-105
Audio Unit Removal/Installation 23-110
Audio Switch Panel Removal/Installation 23-112
Audio disc changer Removal/Installation 23-113
Audio-HVAC Subdisplay Unit Removal/Installation 23-114
Audio-HVAC Display Unit Removal/Installation 23-114
Stereo Amplifier Removal/Installation 23-115
XM Receiver Removal/Installation 23-115
Active Noise Cancellation Microphone Removal/Installation 23-116
Crossover Network Control Unit Removal/Installation 23-117
Speaker Test/Replacement 23-118
Audio Remote Switch Test 23-121
AM/FM Antenna Amplifier Replacement 23-121
AM/FM Antenna Repair 23-122
XM Antenna Replacement 23-122
Auxiliary Jack Assembly Replacement 23-123

Navigation System
Component Location Index 23-124
General Troubleshooting Information 23-126
DTC Troubleshooting Index 23-135
Symptom Troubleshooting Index 23-137
System Description 23-141
Circuit Diagram 23-166
System Diagnostic Mode 23-170
DTC Troubleshooting 23-193
Symptom Troubleshooting 23-218
Forced Starting of Display 23-239
DVD-ROM Replacement 23-239
Navigation Unit Removal/Installation 23-240
Navigation Display Unit Removal/Installation 23-241
Interface Dial Removal/Installation 23-241
HFL-Navigation-ANC Microphone Removal/Installation 23-242
GPS Antenna Removal/Installation 23-242
Voice Control Switch Test 23-243
Voice Control Switch Replacement 23-243

Electrical Compass
Component Location Index 23-244
Symptom Troubleshooting Index 23-245
System Description 23-246
Circuit Diagram 23-248
Electrical Compass Zone Selection and Calibration 23-249
Electrical Compass Unit Input Test 23-251

HandsFreeLink System
Component Location Index 23-252
General Troubleshooting Information 23-253
DTC Troubleshooting Index 23-263
Symptom Troubleshooting Index 23-264
System Description 23-266
HFL System Troubleshooting 23-267
Circuit Diagram 23-268
DTC Troubleshooting 23-270
Symptom Troubleshooting 23-276
HFL Switch Test 23-280
Control Unit Input Test/Replacement 23-281

Special Tools

Ref. No.	Tool Number	Description	Qty
①	07AAZ-SDBA100	Diagnostics CD	1
②	07AAZ-SDBA200	Skip Test CD	1
③	07AAZ-SDBA300	Skip Test CD	1
④	07PAZ-0010100	SCS Service Connector	1

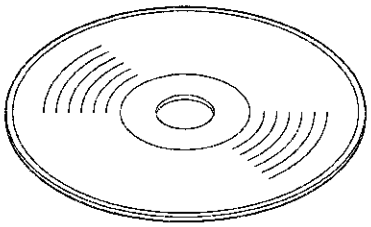

①, ②, ③

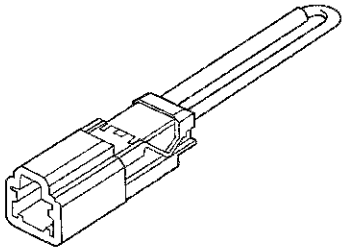

④

HONDA

Component Location Index

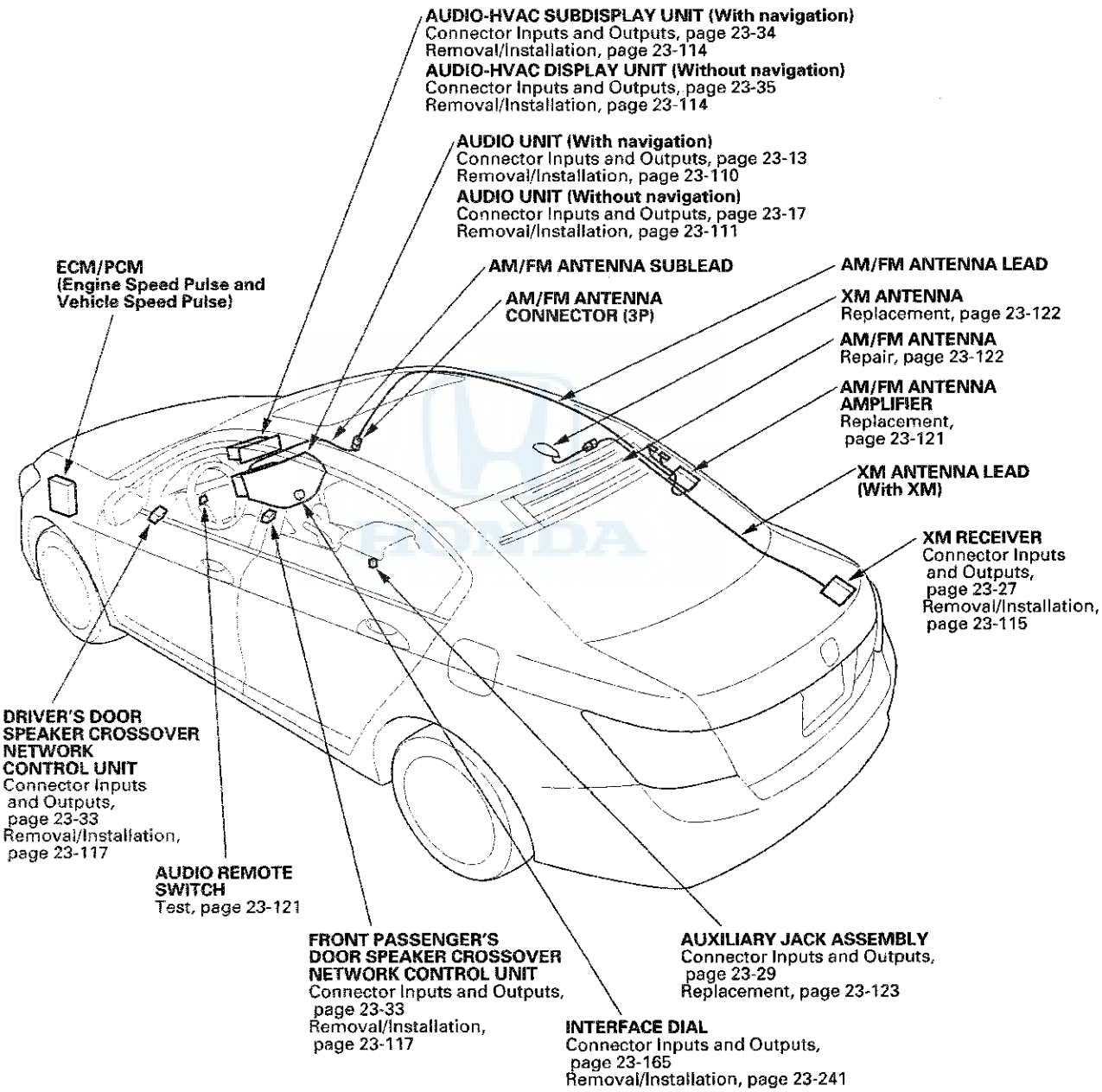

(cont'd)

Component Location Index (cont'd)

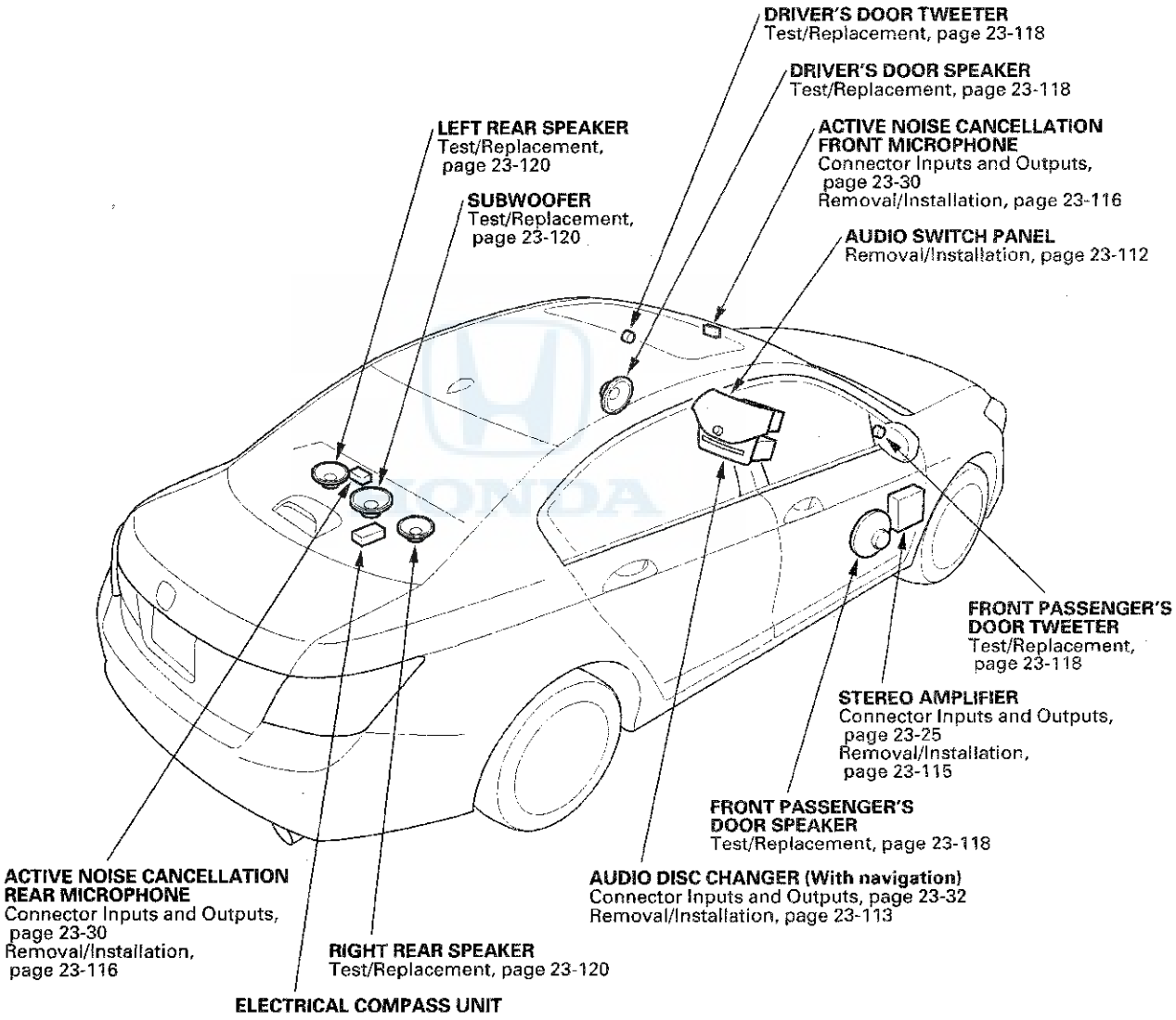

Symptom Troubleshooting Index

Symptom	Diagnostic procedure	Also check for
Poor AM or FM radio reception or interference	Symptom Troubleshooting (see page 23-58)	• Antenna lead short or open in the wire • Aftermarket window tinting
Audio unit power switch will not turn on (No information display and no sound)	Symptom Troubleshooting (see page 23-61)	
Audio unit power switch will not turn off	Symptom Troubleshooting (see page 23-62)	
No sound is heard from the speaker(s) (display is normal) (with premium audio)	Symptom Troubleshooting (see page 23-63)	
No sound is heard from the speaker(s) (display is normal) (without premium audio)	Symptom Troubleshooting (see page 23-68)	
Auxiliary input sound is low or cannot be heard	Symptom Troubleshooting (see page 23-70)	
Audio system sound is weak or distorted (display is normal)	Symptom Troubleshooting (see page 23-72)	
Radio preset memory is lost	Symptom Troubleshooting (see page 23-72)	• Battery condition • Battery cable condition
Volume does not change	Symptom Troubleshooting (see page 23-73)	
Volume does not increase with speed	Symptom Troubleshooting (see page 23-73)	
Volume is too high or too low when driving at freeway speeds	Symptom Troubleshooting (see page 23-74)	
Radio tuner does not change stations	Symptom Troubleshooting (see page 23-75)	
Audio system information does not display on the audio-HVAC (sub) display unit	Symptom Troubleshooting (see page 23-75)	B-CAN DTCs; resolve before troubleshooting
Security indicator does not work properly	Symptom Troubleshooting (see page 23-78)	
Audio unit button illumination does not work (1 CD type)	Symptom Troubleshooting (see page 23-78)	
Audio unit button illumination does not work (Except 1 CD type)	Symptom Troubleshooting (see page 23-79)	
Audio remote switch does not work properly	Symptom Troubleshooting (see page 23-80)	
Audio disc does not load	Symptom Troubleshooting (see page 23-81)	
Audio disc does not eject	Symptom Troubleshooting (see page 23-81)	
Audio disc changer does not load all six discs	Symptom Troubleshooting (see page 23-82)	Tire pressure (over-inflated), disc smudged, dirty, or scratched
Audio disc changer does not move between discs	Symptom Troubleshooting (see page 23-82)	

(cont'd)

Symptom Troubleshooting Index (cont'd)

Symptom	Diagnostic procedure	Also check for
Audio disc does not play	Symptom Troubleshooting (see page 23-83)	Foreign objects such coins or paper inserted into the CD changer/player
Audio disc skips	Symptom Troubleshooting (see page 23-83)	Tire pressure (over-inflated), disc smudged, dirty, or scratched
Audio unit button does not work	Symptom Troubleshooting (see page 23-84)	
Audio unit disc indicator does not work	Symptom Troubleshooting (see page 23-85)	
Booming sound while driving with audio unit on or off	Symptom Troubleshooting (see page 23-85)	
Error code: XM NO SIGNAL is displayed	Symptom Troubleshooting (see page 23-97)	
Error code: XM ANTENNA is displayed	Symptom Troubleshooting (see page 23-98)	
XM radio display is blank and no station information is displayed	Symptom Troubleshooting (see page 23-99)	Also refer to Audio system information does not display on the audio-HVAC (sub) display unit (see page 23-75)
XM radio preset memory is lost	Symptom Troubleshooting (see page 23-102)	
Poor or no sound with XM radio (Audio unit does display XM channels)	Symptom Troubleshooting (see page 23-103)	

HONDA

System Description

Overview

The audio unit acts as the processor for all audio functions. You can select the audio functions from the front panel, the audio remote (on the steering wheel), or by using the navigation voice control system. The audio display provides the current front and rear audio status. For vehicles with the navigation option, additional audio information is available by touching the audio button. (See the owner's manual for more details.)

The XM receiver and audio disc changer pass their signals is to the audio unit. In addition, they communicate with the audio unit via the GA-Net bus. Any open connections or short in the wiring in the GA-Net bus circuit will cause audio (including the audio accessories) and navigation functions to appear inoperative.

With the premium sound system, an audio amplifier unit powers the speakers, otherwise the speakers are powered directly by the audio unit.

The premium sound audio unit has a built-in EEPROM (electrically erasable programmable read-only memory). This memory holds the audio preset data (AM/FM radio frequency, sound settings) even when the battery power is removed.

The system includes an active noise cancellation (ANC) system to cancel some of the vehicle noise. It uses a sine-wave-sound output to cancel low frequency noise. Two microphones detect the low frequency sound, and the system outputs a canceling sound through the audio speakers.

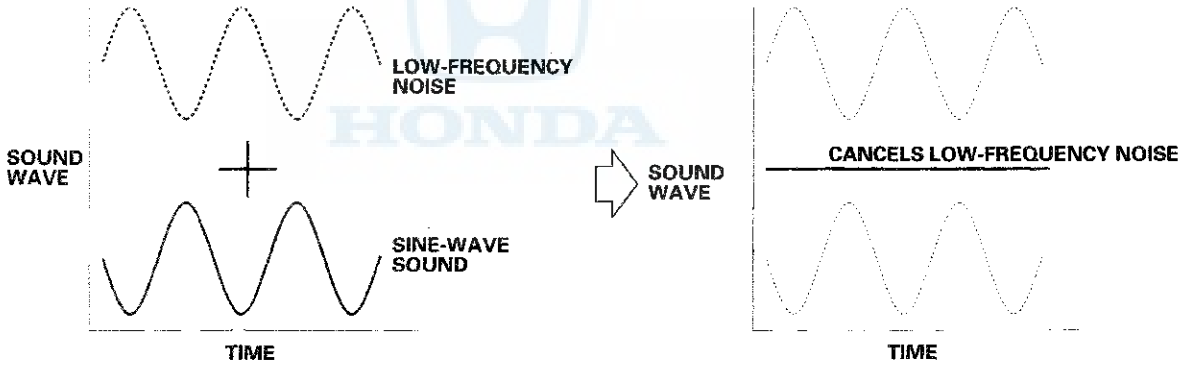

Speed-sensitive Volume Compensation (SVC)
The audio system is equipped with speed-sensitive volume compensation (SVC). The audio unit receives the vehicle speed pulse (VSP) from the ECM/PCM. The system processes the speed input and increases the audio system volume level as the vehicle speed increases to compensate for the various interior noises that occur at higher speeds. When the vehicle slows down, the volume returns to its normal level. The SVC has four settings: SVC OFF, LOW, MID and HIGH that can be adjusted using the audio unit. The SVC comes from the factory with MID set as the default (see the owner's manual for more information).

(cont'd)

System Description (cont'd)

Telematics Muting Logic

The navigation system allows voice control for the audio, the XM, and the CD player. The navigation system uses the GA-Net bus to communicate the voice control commands to the audio unit. When using the navigation TALK/BACK button, the audio is muted on all speakers and you hear navigation sound on the front channels. When using the navigation or route guidance (RG), the front speakers provides the navigation sound and the rear speakers continue to play the audio. For more information, see the navigation and HFL sections. The outline of the muting logic is shown in this table.

Contents	Audio output				
	Left front CH	Right front CH	Right rear CH	Left rear CH	Subwoofer CH
Navigation TALK/BACK Buttons	Navigation voice output	Navigation voice output	Muted	Muted	Muted
Route Guidance	Navigation voice output	Navigation voice output	Audio	Audio	Audio
HFL	Telephone sound	Telephone sound	MUTE	MUTE	MUTE
HFL and Route Guidance or talk back	Navigation sound	Telephone sound	MUTE	MUTE	MUTE

HONDA

System Diagram

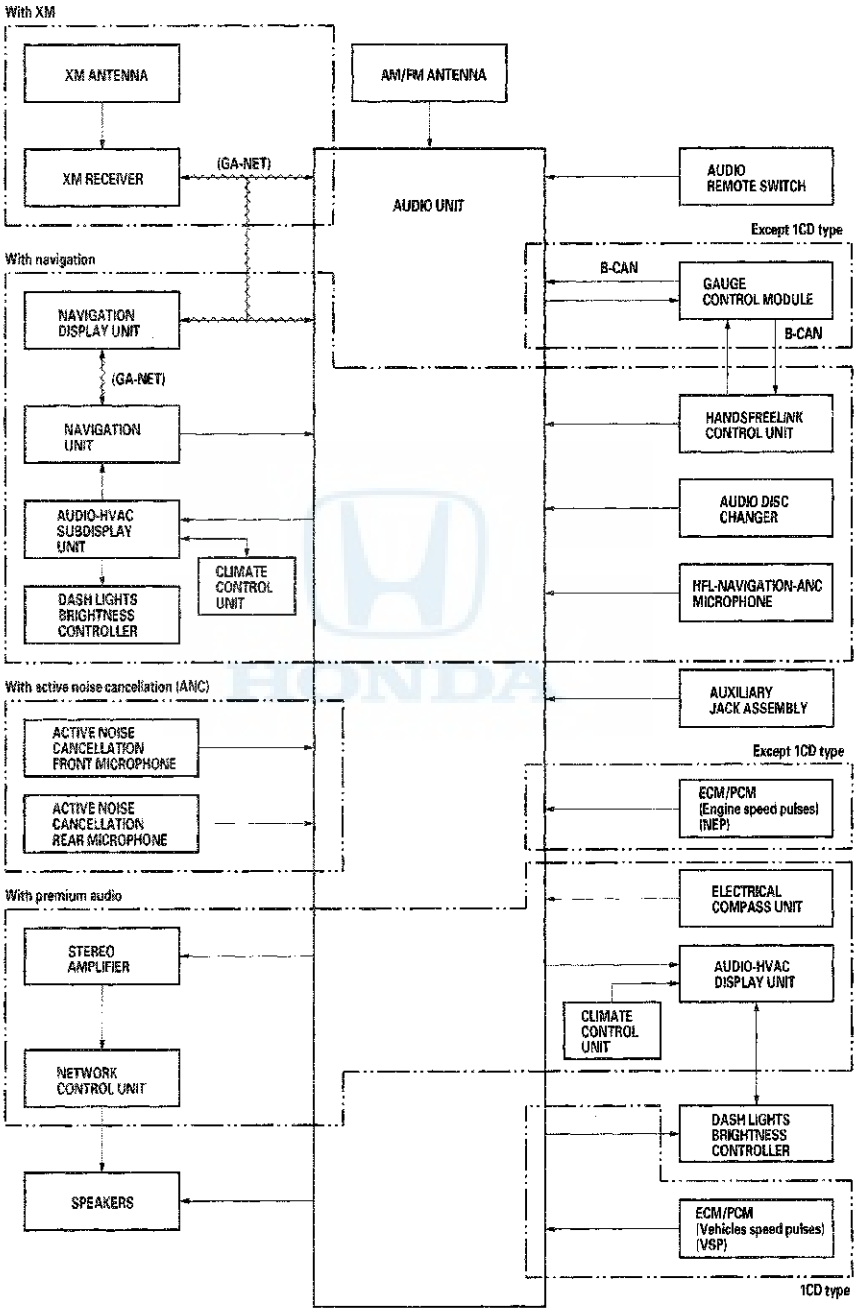

(cont'd)

System Description (cont'd)

NOTE: All items may not apply to this vehicle. See the owner's manual for more information.

Audio Glossary

Item	Definition
Active noise cancellation	The active noise cancellation system cancels some of the vehicle noise. This occurs in the 1,500—2,400 rpm range. Microphones detect the low frequency sound, and the system outputs a canceling sound from the audio speaker.
AM (Amplitude Modulation)	The type of transmission used in the standard radio broadcast band from 530 to 1710 kHz.
Amplifier	A device that increases the level of a signal by increasing the current or voltage.
Antenna	A device used to send or receive electromagnetic waves through the air.
ATA (PC Card)	A type of card that has been tested for use in playing WMA, and MP3 music files in the PC Card slot. Sizes of up to 1 GB have been tested.
Audio remote switch	The switches on the steering wheel that control the audio system.
Auxiliary jack	Allows the customer to use a portable audio device to input audio recordings.
Balance	A control that changes the relative volume of the left and right channels.
Band	A range of frequencies between two definite limits. Bands are assigned by the Federal Communications Commission for specific uses.
Bass	An adjustment for the low frequency sounds of around 160 Hz and below.
Byte	A unit of storage for computer files and memory. A CD holds approximately 700 million bytes.
Cassette	Audio or video magnetic tape container having two reels. Customers can insert it for play back
Compact flash	A standard for small-size (3 x 4 cm), memory cards used in mobile computers, PDAs, digital cameras. Compact flash memory cards are available in size of 32 MB up to 4 GB or more and can be played in the audio PC slot. Sizes above 1 GB have not been tested.
CD (Compact Disc)	A 4.5-inch plastic disc containing digital audio recording that is played optically on a laser equipped player. Never use discs with a paper label. In a hot vehicle, labels can curl up and jam the unit.
CD (audio disc) changer	CD player that can store and play more than one CD. Two types are available. Some units accept CDs fed into the changer one at a time, and others accept a magazine (with CDs stacked in a container).
CD player	A component designed to play compact disc recordings using a laser optical pickup. The signal from a CD player usually requires amplification.
Decibels (db)	A method of measuring sound or radio signal strength received by the audio unit antenna.
Distortion	Inexact reproduction of an audio signal caused by playing music at levels the audio system cannot handle.
Dolby (noise reduction)	A processing system developed by Dolby Laboratories that reduces the background noise on recording media. The result is a cleaner playback from the audio system.
DUET	A serial data communication line used for sub display.
DVD (Digital Versatile Disc)	A 4.5-inch CD-like format used for storing movies with digital audio and video features. The DVD-A format is a DVD format designed for DVD audio systems. Some vehicles can play DVD and DVD-A formats.
Equalizer	A device that changes the relative volume of individual frequency bands to suit personal tastes of the listener.
Fader	The control that adjusts the relative volume levels of front and rear speakers in a four-speaker system.
Format	To prepare a PC Card to receive files this function is done on a PC. Always choose either FAT or FAT32, as the NTFS format is not accepted by the system. Pick the default sectors for the format method selected.
FM (Frequency Modulation)	The form of modulation used for radio and television sound transmission in most of the world. Less prone to interference than AM. The FM broadcast band in North America covers roughly 87.7 to 107.9 MHz.

Audio Glossary

Item	Definition
GA-Net	The GA-Net allows the audio unit to communicate with all the audio and navigation components in a vehicle. If there is an open in the GA-Net or components, the entire audio and navigation system may appear inoperative.
GB (Gigabyte)	A unit of memory or disk storage equal to billion bytes (1000 million bytes).
HDD	Abbreviation for hard disc drive. They are sensitive to heat and it is not recommended that they be used in the PC card slot for playing audio files.
Hertz (HZ)	The unit of frequency equal to one cycle per second (cps). One kilohertz (kHz) equals 1,000 cps; one megahertz (MHz) equals 1 million cps.
Integrated amplifier	A component that combines a pre amp and a power amp into a single unit. A receiver combines an integrated amp and a tuner into a single unit.
Jewel case	The hard plastic case that contains a compact disc or DVD. Always use a jewel case to prevent scratches on the underside of a CD or DVD.
LCD (Liquid Crystal Display)	A type of digital display that changes reflectance or transmittance when an electrical field is applied to it.
Memory	Circuitry or devices that hold information in electrical or magnetic form, such as the AM/FM radio presets.
MB (Megabyte)	One million bytes. Written as 1 MB. Megabytes are used as a measure of digital storage space. For example, a CD can hold 650 MB.
Mic	An abbreviation for microphone. For vehicles with navigation, the microphone accepts navigation voice commands to control audio and navigation functions.
MP3 music files	MP3 is an audio coding format. MP3 is a popular audio compression format on the Internet and computers. CDs and PC Cards with these files can be played on some vehicle's audio system.
Mute	When the navigation gives guidance, the front speakers are muted (no music). When you use the voice control system, all of the speakers are muted.
Noise	Unwanted random sounds like buzzing, hiss, pops, static, whine, etc.
PC card	The slot used for playing MP3 and WMA music files. The PC Card is usually a combination of a small flash card in a PCMCIA adaptor that slides into the slot. The ATA, SD, and compact flash types of cards have been tested up to 1 GB.
PCMCIA	A computer standard for the slot that the PC card slides into. Another term for the PC card slot.
Processor	The part of an audio device that performs tasks/calculations. In the audio unit, the processor handles muting to allow the navi to speak its voice commands, and the decoding/playback of the sound files etc.
Radio	A head unit that combines a tuner, a preamplifier, and often a power-amplifier.
Route guidance (RG)	Spoken voice used for turn-by-turn navigation from the audio speakers.
SCF (Cold Start Fix) screens	These screens are displayed if the system requires a GPS initialization. The vehicle should be moved outside into an open area away from buildings/power lines.
Stereo	A recording of at least two channels where you can hear sound or music from the left or right side.
SD (Secure Digital) card	This compact type of memory card allows for fast data transfer and has built-in security functions. SD cards have a small write-protection switch on the side.
Shield	A metallic foil or braided wire layer surrounding conductors which are designed to prevent electrostatic or electromagnetic interference (noise) from external sources such as buzzing, or popping sounds heard on the speakers.
Speaker (Loudspeaker)	A device that converts electrical energy into acoustical energy (sound).
Speed-sensitive volume compensation (SVC)	The SVC increases the audio volume to compensate for increased interior noise when the vehicle drivers at freeway speeds.
Subwoofer	A loudspeaker made to reproduce the lowest audio frequencies, about 25 Hz to 125 Hz.

(cont'd)

System Description (cont'd)

Audio Glossary

Item	Definition
Track	A sound recording on a CD, tape, or PC Card.
Treble	An adjustment to control the volume of the high frequency sounds.
Tuner	A component (or part of a component) that receives radio signals and selects one broadcast from many.
Tweeter	A speaker designed to reproduce the higher frequencies (treble) only.
Voice coil	A coil of wire wrapped around a tube and then attached to the speaker cone or diaphragm. When an audio signal is applied, the coil becomes an electromagnet and interacts with the permanent magnet causing the come or diaphragm to vibrate. We interpret this vibrations as sound.
Volume control	Allows you to control the loudness of the music.
WMA music file	Windows Media Audio File. This is an accepted format for music files to be played on either a CD-R, a CD-RW or a PC Card.
Woofer	A speaker that is designed to reproduce low (bass) frequencies only.
XM radio	Satellite based radio transmission, which also uses a ground based repeater network to ensure seamless reception. The channels originate from XM's broadcast center, in Washington, DC, and uplink to two satellites. These satellites transmit the signal across the entire continental United States.
XM receiver	The external component that receives and processes the XM signals from the XM satellites, and terrestrial (land) stations. The audio unit communicates to the XM receiver over the GA-Net bus.

HONDA

Audio Unit Connector for Inputs and Outputs

With Premium Audio System (With Navigation System)

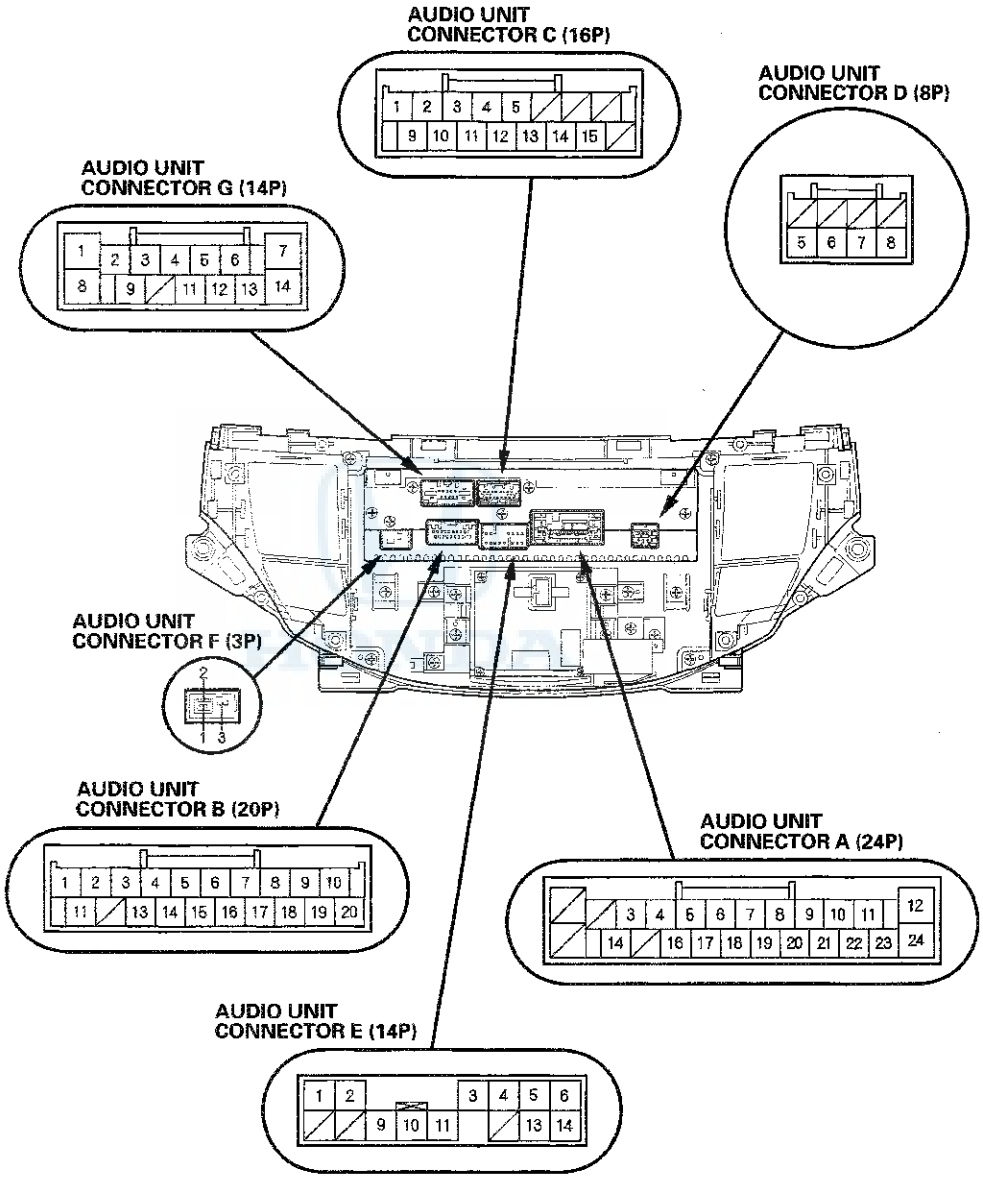

(cont'd)

System Description (cont'd)

AUDIO UNIT CONNECTOR A (24P)

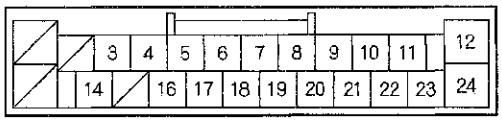

Terminal side of male terminals

AUDIO UNIT CONNECTOR B (20P)

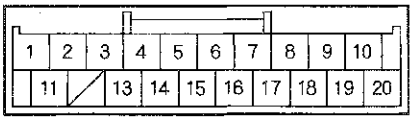

Terminal side of male terminals

Audio Unit Connector A (24P)

Cavity	Wire	Connects to
A3	LT BLU	Data link connector (DLC) (K-line)
A4	YEL	Navigation display unit (SCTY −)
A5	BRN	Audio remote switch ground
A6	RED	Stereo amplifier (RR PRE−)
A7	GRN	Stereo amplifier (RR PRE+)
A8	GRY*	Stereo amplifier (SH RR GND)
A9	GRY*	Stereo amplifier (SH RL GND)
A10	RED	Stereo amplifier (RL PRE−)
A11	GRN	Stereo amplifier (RL PRE+)
A12	BRN	Ground (G402) (MAIN GND)
A14	PUR	ACC (audio power supply)
A16	PNK	Audio remote switch
A17	WHT	Stereo amplifier (SWD +B)
A18	RED	Stereo amplifier (FR PRE−)
A19	GRN	Stereo amplifier (FR PRE+)
A20	GRY*	Stereo amplifier (SH FR GND)
A21	GRY*	Stereo amplifier (SH FL GND)
A22	RED	Stereo amplifier (FL PRE−)
A23	GRN	Stereo amplifier (FL PRE+)
A24	WHT	Constant power (+B)

*: The shielded wires have a heat-shrink tube insulating the outside of the wire. The color of the insulating tube, typically black or dark gray, may not match the color of the wire shown on the circuit diagram.

Audio Unit Connector B (20P)

Cavity	Wire	Connects to
B1	GRN	Navigation unit (NAVI GND)
B2	GRY*	Navigation unit (NAVI SH GND)
B3	BLK	Auxiliary jack assembly (AUX SIG GND)
B4	GRY*	Auxiliary jack assembly (AUX SH GND)
B5	YEL	Auxiliary jack assembly (AUX GND)
B6	RED	Audio-HVAC subdisplay unit (DUET TX (UART))
B7	GRN	Audio-HVAC subdisplay unit (DUET RX (UART))
B8	BLU	B-CAN bus communication (B-CAN L)
B9	RED	HandsFreeLink control unit (TELM SIG−)
B10	GRY*	HandsFreeLink control unit (TELM SIG SH)
B11	RED	Navigation unit (NAVI L CH)
B13	RED*	Auxiliary jack assembly (AUX L SH)
B14	WHT*	Auxiliary jack assembly (AUX R SH)
B15	GRY	Auxiliary jack assembly (AUX DET)
B16	BLK*	Audio-HVAC subdisplay unit (SH DUET GND)
B17	BLU	Audio-HVAC subdisplay unit (DUET CONT)
B18	PNK	B-CAN bus communication (B-CAN H)
B19	GRN	HandsFreeLink control unit (TELM SIG+)
B20	LT GRN	HandsFreeLink control unit (HFL MUTE)

*: The shielded wires have a heat-shrink tube insulating the outside of the wire. The color of the insulating tube, typically black or dark gray, may not match the color of the wire shown on the circuit diagram.

AUDIO UNIT CONNECTOR C (16P)

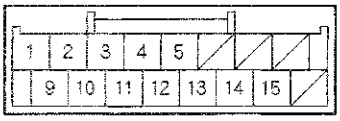

Terminal side of male terminals

Audio Unit Connector C (16P)

Cavity	Wire	Connects to
C1	GRN	Stereo amplifier (ANC R−)
C2	BLK	Stereo amplifier (ANC R+)
C3	GRY*	Stereo amplifier (SH ANC GND)
C4	WHT	Active noise cancellation front microphone (ANC F MIC 8 V)
C5	BLU	Active noise cancellation front microphone (ANC R MIC 8 V)
C9	WHT	Stereo amplifier (ANC F−)
C10	RED	Stereo amplifier (ANC F+)
C11	BLK*	Active noise cancellation front microphone (SH ANCM F GND)
C12	BLK*	Active noise cancellation rear microphone (SH ANCM R GND)
C13	BRN	Not used
C14	LT BLU	Not used
C15	YEL	ECM/PCM (ENGINE SPEED PULSE) (NEP)

*: The shielded wires have a heat-shrink tube insulating the outside of the wire. The color of the insulating tube, typically black or dark gray, may not match the color of the wire shown on the circuit diagram.

AUDIO UNIT CONNECTOR D (8P)

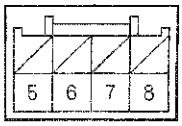

Terminal side of male terminals

Audio Unit Connector D (8P)

Cavity	Wire	Connects to
D5	LT GRN	Stereo amplifier (AMP MUTE)
D6	RED	Stereo amplifier (SUBW PRE−)
D7	BLK*	Stereo amplifier (SH SUBW GND)
D8	GRN	Stereo amplifier (SUBW PRE+)

*: The shielded wires have a heat-shrink tube insulating the outside of the wire. The color of the insulating tube, typically black or dark gray, may not match the color of the wire shown on the circuit diagram.

(cont'd)

System Description (cont'd)

AUDIO UNIT CONNECTOR E (14P)

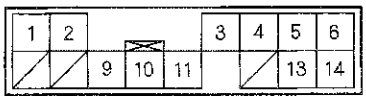

Terminal side of male terminals

Audio Unit Connector E (14P)

Cavity	Wire	Connects to
E1	WHT	XM receiver (+B)
E2	LT BLU	XM receiver (SYS ON)
E3	GRY*	XM receiver (GA-NET BUS SH)
E4	GRY	XM receiver (AUDIO SH)
E5	GRN	XM receiver (AUDIO R+)
E6	BLK	XM receiver (AUDIO L+)
E9	RED	XM receiver (GA-NET BUS+)
E10	GRN	XM receiver (GA-NET BUS−)
E11	BLK	XM receiver (GND)
E13	WHT	XM receiver (AUDIO R−)
E14	RED	XM receiver (AUDIO L−)

*: The shielded wires have a heat-shrink tube insulating the outside of the wire. The color of the insulating tube, typically black or dark gray, may not match the color of the wire shown on the circuit diagram.

AUDIO UNIT CONNECTOR F (3P)

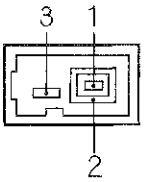

Terminal side of male terminals

Audio Unit Connector F (3P)

Cavity	Wire	Connects to
F1	——	AM/FM antenna amplifier (RF IN)
F2	——	AM/FM antenna amplifier (RF SH)
F3	——	AM/FM antenna amplifier (ANT +B)

AUDIO UNIT CONNECTOR G (14P)

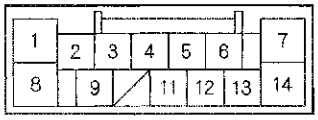

Terminal side of male terminals

Audio Unit Connector G (14P)

Cavity	Wire	Connects to
G1	WHT	Audio disc changer (Light-on signal−)
G2	RED	Audio disc changer (6 CD GA-NET BUS−)
G3	GRY*	Audio disc changer (6 CD GA-NET BUS SH)
G4	WHT	Audio disc changer (6 CD AUDIO L−)
G5	GRN	Audio disc changer (6 CD AUDIO R−)
G6	GRY*	Audio disc changer (6 CD AUDIO SH)
G7	BLK	Audio disc changer (6 CD GND)
G8	BLU	Audio disc changer (Light-on signal+)
G9	GRN	Audio disc changer (6 CD GA-NET BUS+)
G11	RED	Audio disc changer (6 CD AUDIO L+)
G12	BLK	Audio disc changer (6 CD AUDIO R+)
G13	LT BLU	Audio disc changer (6 CD SYS ON)
G14	ORN	Audio disc changer (6 CD +B)

*: The shielded wires have a heat-shrink tube insulating the outside of the wire. The color of the insulating tube, typically black or dark gray, may not match the color of the wire shown on the circuit diagram.

Audio Unit Connector for Inputs and Outputs

With Premium Audio System (Without Navigation System)

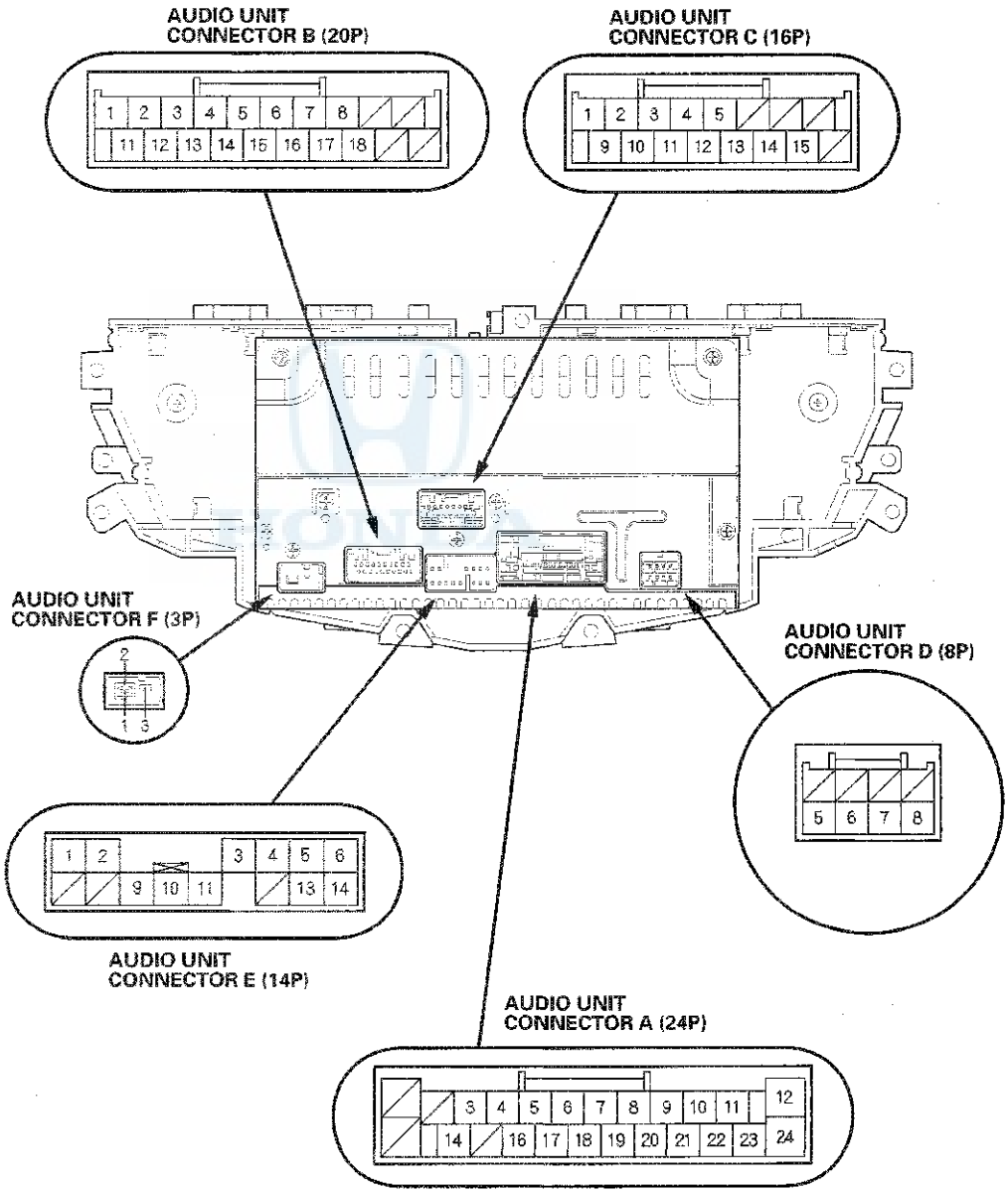

(cont'd)

System Description (cont'd)

AUDIO UNIT CONNECTOR A (24P)

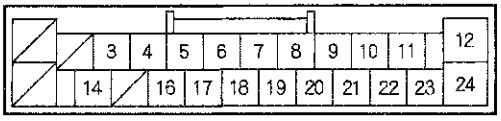

Terminal side of male terminals

Audio Unit Connector A (24P)

Cavity	Wire	Connects to
A3	LT BLU	Data link connector (DLC) (K-line)
A4	GRN	Passenger's MICU (SCTY)
A5	BRN	Audio remote switch ground (REMOTE GND)
A6	RED	Stereo amplifier (RR PRE−)
A7	GRN	Stereo amplifier (RR PRE+)
A8	GRY*	Stereo amplifier (SH RR GND)
A9	GRY*	Stereo amplifier (SH RL GND)
A10	RED	Stereo amplifier (RL PRE−)
A11	GRN	Stereo amplifier (RL PRE+)
A12	BRN	Ground (G402) (MAIN GND)
A14	PUR	Audio power supply (ACC)
A16	PNK	Audio remote switch (REMOTE)
A17	WHT	Stereo amplifier (SWD +B)
A18	RED	Stereo amplifier (FR PRE−)
A19	GRN	Stereo amplifier (FR PRE+)
A20	GRY*	Stereo amplifier (SH FR GND)
A21	GRY*	Stereo amplifier (SH FL GND)
A22	RED	Stereo amplifier (FR PRE−)
A23	GRN	Stereo amplifier (FR PRE+)
A24	WHT	Constant power (+B)

*: The shielded wires have a heat-shrink tube insulating the outside of the wire. The color of the insulating tube, typically black or dark gray, may not match the color of the wire shown on the circuit diagram.

AUDIO UNIT CONNECTOR B (20P)

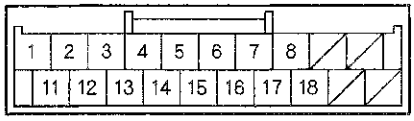

Terminal side of male terminals

Audio Unit Connector B (20P)

Cavity	Wire	Connects to
B1	RED	Electrical compass unit (COMPASS TX−)
B2	ORN	Electrical compass unit (COMPASS TX+)
B3	BLK	Auxiliary jack assembly (AUX SIG GND)
B4	GRY*	Auxiliary jack assembly (AUX SH GND)
B5	YEL	Auxiliary jack assembly (AUX GND)
B6	RED	Audio-HVAC subdisplay unit (DUET TX (UART))
B7	GRN	Audio-HVAC subdisplay unit (DUET RX (UART))
B8	BLU	B-CAN bus communication (B-CAN L)
B11	PNK	Electrical compass unit (COMPASS RX−)
B12	LT BLU	Electrical compass unit (COMPASS RX+)
B13	RED	Auxiliary jack assembly (AUX L CH)
B14	WHT*	Auxiliary jack assembly (AUX R CH)
B15	GRY	Auxiliary jack assembly (AUX DET)
B16	BLK*	Audio-HVAC subdisplay unit (SH DUET GND)
B17	BLU	Audio-HVAC subdisplay unit (DUET CONT)
B18	PNK	B-CAN bus communication (B-CAN H)

*: The shielded wires have a heat-shrink tube insulating the outside of the wire. The color of the insulating tube, typically black or dark gray, may not match the color of the wire shown on the circuit diagram.

AUDIO UNIT CONNECTOR C (16P)

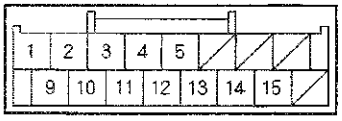

Terminal side of male terminals

Audio Unit Connector C (16P)

Cavity	Wire	Connects to
C1	GRN	Stereo amplifier (ANC R−)
C2	BLK	Stereo amplifier (ANC R+)
C3	GRY*	Stereo amplifier (SH ANC GND)
C4	WHT	Active noise cancellation front microphone (ANC F MIC 8 V)
C5	BLU	Active noise cancellation rear microphone (ANC R MIC 8 V)
C9	WHT	Stereo amplifier (ANC F−)
C10	RED	Stereo amplifier (ANC F+)
C11	GRY*	Active noise cancellation front microphone (SH ANCM F GND)
C12	BLK*	Active noise cancellation rear microphone (SH ANCM R GND)
C13	BRN	Not used
C14	LT BLU	Not used
C15	YEL	ECM/PCM (ENGINE SPEED PULSE) (NEP)

*: The shielded wires have a heat-shrink tube insulating the outside of the wire. The color of the insulating tube, typically black or dark gray, may not match the color of the wire shown on the circuit diagram.

AUDIO UNIT CONNECTOR D (8P)

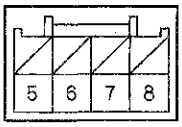

Terminal side of male terminals

Audio Unit Connector D (8P)

Cavity	Wire	Connects to
D5	LT GRN	Stereo amplifier (AMP MUTE)
D6	RED	Stereo amplifier (SUBW PRE−)
D7	BLK*	Stereo amplifier (SH SUBW GND)
D8	GRN	Stereo amplifier (SUBW PRE+)

*: The shielded wires have a heat-shrink tube insulating the outside of the wire. The color of the insulating tube, typically black or dark gray, may not match the color of the wire shown on the circuit diagram.

(cont'd)

System Description (cont'd)

AUDIO UNIT CONNECTOR E (14P)

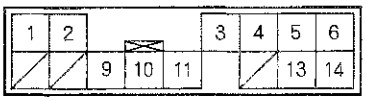

Terminal side of male terminals

AUDIO UNIT CONNECTOR F (3P)

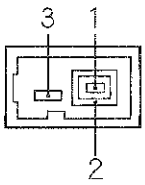

Terminal side of male terminals

Audio Unit Connector E (14P)

Cavity	Wire	Connects to
E1	WHT	XM receiver (+B)
E2	LT BLU	XM receiver (SYS ON)
E3	GRY	XM receiver (GA-NET BUS SH)
E4	GRY*	XM receiver (AUDIO SH)
E5	GRN	XM receiver (AUDIO R+)
E6	BLK	XM receiver (AUDIO L+)
E9	RED	XM receiver (GA-NET BUS+)
E10	GRN	XM receiver (GA-NET BUS−)
E11	BLK	XM receiver (GND)
E13	WHT	XM receiver (AUDIO R−)
E14	RED	XM receiver (AUDIO L−)

*: The shielded wires have a heat-shrink tube insulating the outside of the wire. The color of the insulating tube, typically black or dark gray, may not match the color of the wire shown on the circuit diagram.

Audio Unit Connector F (3P)

Cavity	Wire	Connects to
F1	——	AM/FM antenna amplifier (RF IN)
F2	——	AM/FM antenna amplifier (RF SH)
F3	——	AM/FM antenna amplifier (ANT +B)

Audio Unit Connector for Inputs and Outputs

Without Premium Audio System

1 CD type

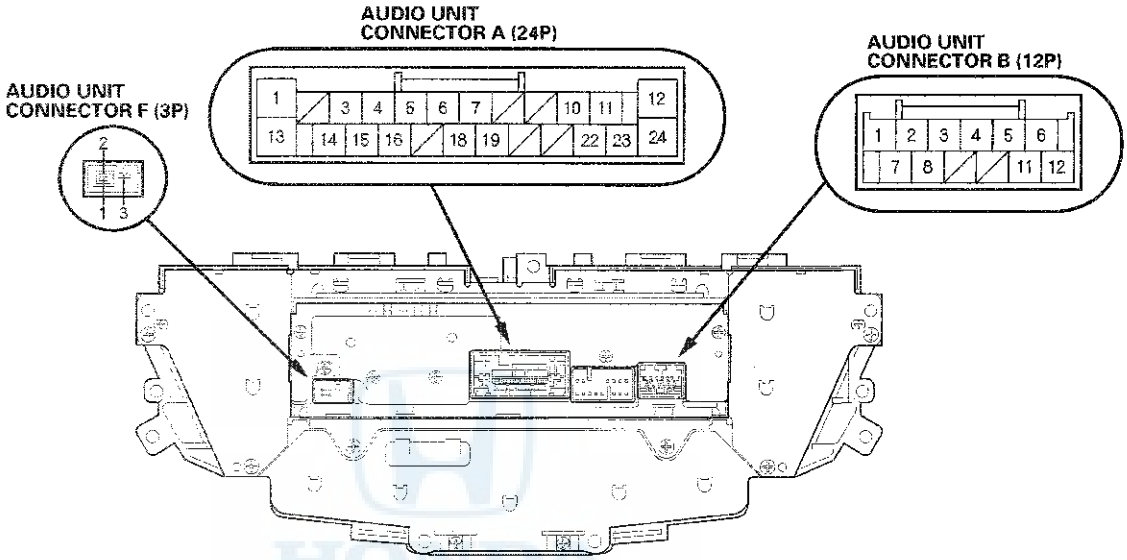

6 CD type

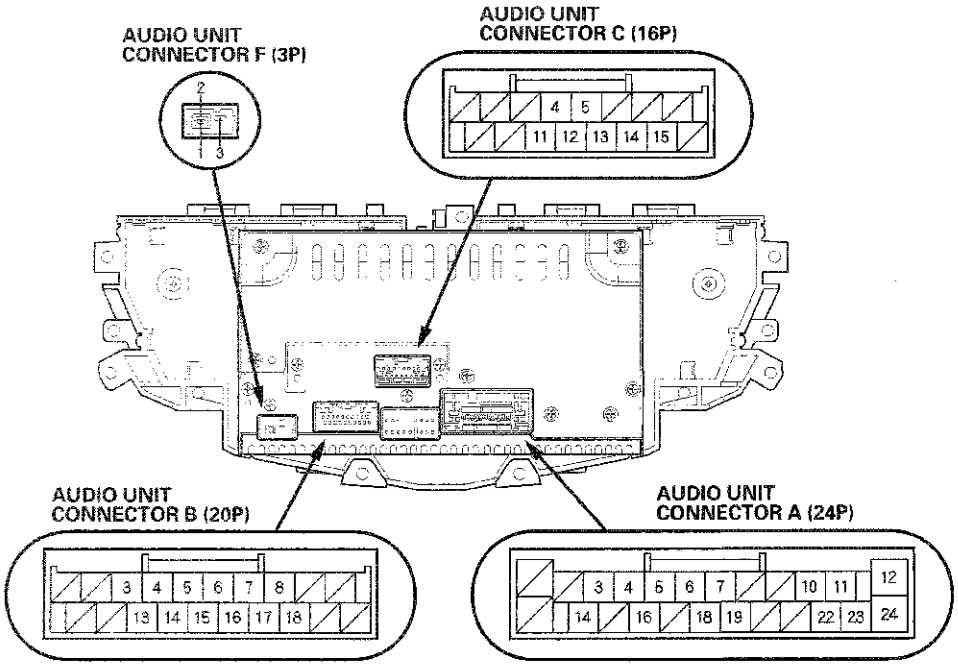

(cont'd)

System Description (cont'd)

AUDIO UNIT CONNECTOR A (24P) (1 CD Type)

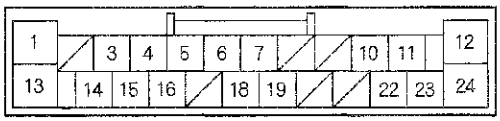

Terminal side of male terminals

AUDIO UNIT CONNECTOR B (12P) (1 CD Type)

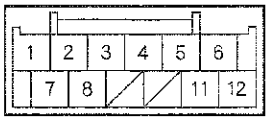

Terminal side of male terminals

Audio Unit Connector A (24P) (1 CD Type)

Cavity	Wire	Connects to
A1	RED	Dash lights brightness controller (ILL-BULB)
A3	LT BLU	Data link connector (DLC) (K-line)
A4	GRN	Passenger's MICU (SCTY)
A5	BRN	Audio remote switch ground (REMOTE GND)
A6	ORN	Right rear speaker (RR SP−)
A7	BLU	Right rear speaker (RR SP+)
A10	BRN	Left rear speaker (RL SP−)
A11	YEL	Left rear speaker (RL SP+)
A12	BRN	Ground (G402) (MAIN GND)
A13	GRY	Lights-on signal (ILL+)
A14	PUR	Audio power supply (ACC)
A15	BLU	ECM/PCM (Vehicle speed signal) (VSP)
A16	PNK	Audio remote switch (REMOTE)
A18	RED	Front passenger's door speaker (−), Right front door tweeter (−) (FR SP−)
A19	GRY	Front passenger's door speaker (+), Right front door tweeter (+) (FR SP+)
A22	PNK	Driver's door speaker (−), Left front door tweeter (−) (FL SP−)
A23	LT GRN	Driver's door speaker (+), Left front door tweeter (−) (FL SP+)
A24	WHT	Constant power (+B)

Audio Unit Connector B (12P) (1 CD Type)

Cavity	Wire	Connects to
B1	BLK	Auxiliary jack assembly (AUX SIG GND)
B2	GRY*	Auxiliary jack assembly (AUX SH GND)
B3	YEL	Auxiliary jack assembly (AUX GND)
B4	GRY	Auxiliary jack assembly (AUX DET)
B5	BLK*	Audio-HVAC subdisplay unit (SH DUET GND)
B6	RED	Audio-HVAC subdisplay unit (DUET TX (UART))
B7	RED	Auxiliary jack assembly (AUX L CH)
B8	WHT	Auxiliary jack assembly (AUX R CH)
B11	BLU	Audio-HVAC subdisplay unit (DUET CONT)
B12	GRN	Audio-HVAC subdisplay unit (DUET RX (UART))

*: The shielded wires have a heat-shrink tube insulating the outside of the wire. The color of the insulating tube, typically black or dark gray, may not match the color of the wire shown on the circuit diagram.

AUDIO UNIT CONNECTOR A (24P) (6 CD Type)

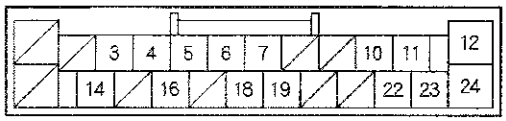

Terminal side of male terminals

AUDIO UNIT CONNECTOR B (20P) (6 CD Type)

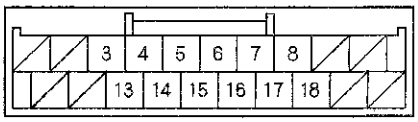

Terminal side of male terminals

Audio Unit Connector A (24P) (6 CD Type)

Cavity	Wire	Connects to
A3	LT BLU	Data link connector (DLC) (K-line)
A4	GRN	Passenger's MICU (SCTY)
A5	BRN	Audio remote switch ground (REMOTE GND)
A6	ORN	Right rear speaker (RR SP−)
A7	BLU	Right rear speaker (RR SP+)
A10	BRN	Left rear speaker (RL SP−)
A11	YEL	Left rear speaker (RL SP+)
A12	BRN	Ground (G402) (MAIN GND)
A14	PUR	Audio power supply (ACC)
A16	PNK	Audio remote switch (REMOTE)
A18	RED	Front passenger's door speaker (−), Right front door tweeter (−) (FR SP−)
A19	GRY	Front passenger's door speaker (+), Right front door tweeter (+) (FR SP+)
A22	PNK	Driver's door speaker (−), Left front door tweeter (−) (FL SP−)
A23	LT GRN	Driver's door speaker (+), Left front door tweeter (+) (FL SP+)
A24	WHT	Constant power (+B)

Audio Unit Connector B (20P) (6 CD Type)

Cavity	Wire	Connects to
B3	BLK*	Auxiliary jack assembly (AUX SIG GND)
B4	GRY*	Auxiliary jack assembly (AUX SH GND)
B5	YEL	Auxiliary jack assembly (AUX GND)
B6	RED	Audio-HVAC subdisplay unit (DUET TX (UART))
B7	GRN	Audio-HVAC subdisplay unit (DUET RX (UART))
B8	BLU	B-CAN bus communication (B-CAN L)
B13	RED	Auxiliary jack assembly (AUX L CH)
B14	WHT	Auxiliary jack assembly (AUX R CH)
B15	GRY	Auxiliary jack assembly (AUX DET)
B16	BLK*	Audio-HVAC subdisplay unit (SH DUET GND)
B17	BLU	Audio-HVAC subdisplay unit (DUET CONT)
B18	PNK	B-CAN bus communication (B-CAN H)

*: The shielded wires have a heat-shrink tube insulating the outside of the wire. The color of the insulating tube, typically black or dark gray, may not match the color of the wire shown on the circuit diagram.

(cont'd)

System Description (cont'd)

AUDIO UNIT CONNECTOR C (16P) (6 CD Type)

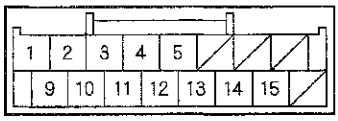

Terminal side of male terminals

AUDIO UNIT CONNECTOR F (3P)

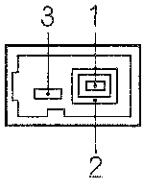

Terminal side of male terminals

Audio Unit Connector C (16P) (6 CD Type)

Cavity	Wire	Connects to
C4	WHT	Active noise cancellation front microphone (ANC F MIC 8 V)
C5	BLU	Active noise cancellation rear microphone (ANC R MIC 8 V)
C11	BLK*	Active noise cancellation front microphone (SH ANCM F GND)
C12	BLK*	Active noise cancellation rear microphone (SH ANCM R GND)
C13	BRN	Not used
C14	LT BLU	Not used
C15	YEL	ECM/PCM (ENGINE SPEED PULSE) (NEP)

*: The shielded wires have a heat-shrink tube insulating the outside of the wire. The color of the insulating tube, typically black or dark gray, may not match the color of the wire shown on the circuit diagram.

Audio Unit Connector F (3P)

Cavity	Wire	Connects to
F1	——	AM/FM antenna amplifier (RF IN)
F2	——	AM/FM antenna amplifier (RF SH)
F3	——	AM/FM antenna amplifier (ANT +B)

Stereo Amplifier Connector for Inputs and Outputs

Premium Audio System

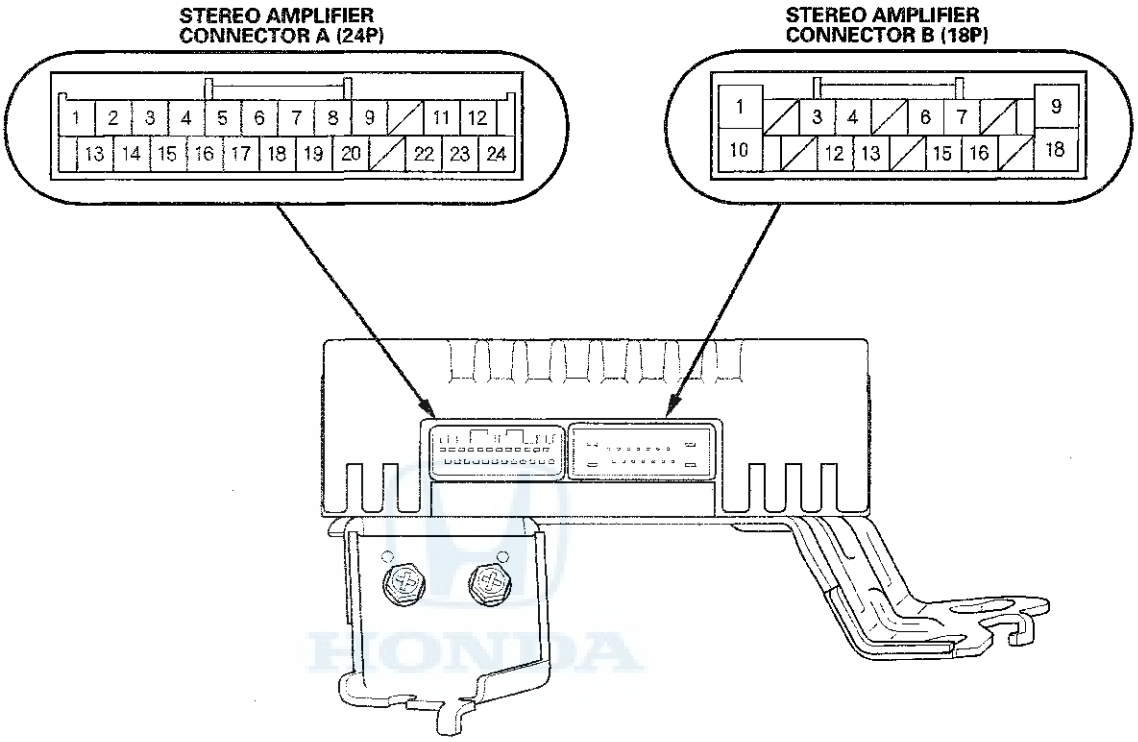

(cont'd)

System Description (cont'd)

STEREO AMPLIFIER CONNECTOR A (24P)

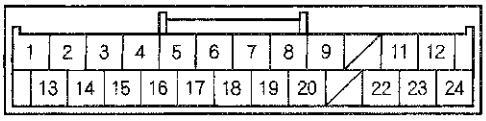

Terminal side of male terminals

STEREO AMPLIFIER CONNECTOR B (18P)

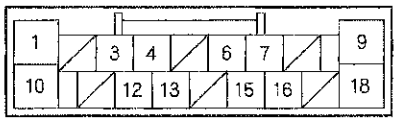

Terminal side of male terminals

Stereo Amplifier Connector A (24P)

Cavity	Wire	Connects to
A1	BRN	Ground (G402) (GND)
A2	RED	Audio unit (FL PRE−)
A3	GRY*	Audio unit (SH FL GND)
A4	RED	Audio unit (RL PRE−)
A5	RED	Audio unit (FR PRE−)
A6	GRY	Audio unit (SH FR GND)
A7	RED	Audio unit (RR PRE−)
A8	RED	Audio unit (SUBW PRE−)
A9	BLK*	Audio unit (SH SUBW GND)
A11	WHT	Audio unit (ANC F−)
A12	GRN	Audio unit (ANC R−)
A13	LT GRN	Audio unit (AMP MUTE)
A14	GRN	Audio unit (FL PRE+)
A15	GRY*	Audio unit (SH RL GND)
A16	GRN	Audio unit (RL PRE+)
A17	GRN	Audio unit (FR PRE+)
A18	GRY*	Audio unit (SH RR GND)
A19	GRN	Audio unit (RR PRE+)
A20	GRN	Audio unit (SUBW PRE+)
A22	RED	Audio unit (ANC F+)
A23	BLK	Audio unit (ANC R+)
A24	WHT	Audio unit (SWD +B)

*: The shielded wires have a heat-shrink tube insulating the outside of the wire. The color of the insulating tube, typically black or dark gray, may not match the color of the wire shown on the circuit diagram.

Stereo Amplifier Connector B (18P)

Cavity	Wire	Connects to
B1	LT BLU	Subwoofer (SUBW SP−)
B3	ORN	Right rear speaker (RR SP−)
B4	BRN	Left rear speaker (RL SP−)
B6	WHT	Front passenger's door speaker crossover network control unit (AMP−)
B7	PUR	Driver's door speaker crossover network control unit (AMP−)
B9	BLK	Ground (G401) (GND)
B10	GRY	Subwoofer (SUBW SP+)
B12	BLU	Right rear speaker (RR SP+)
B13	YEL	Left rear speaker (RL SP+)
B15	PNK	Front passenger's door speaker crossover network control unit (FR SP+)
B16	GRN	Driver's door speaker crossover network control unit (FR SP+)
B18	WHT	Constant power (+B)

XM Receiver Connector for Inputs and Outputs

Premium Audio System

4-Door

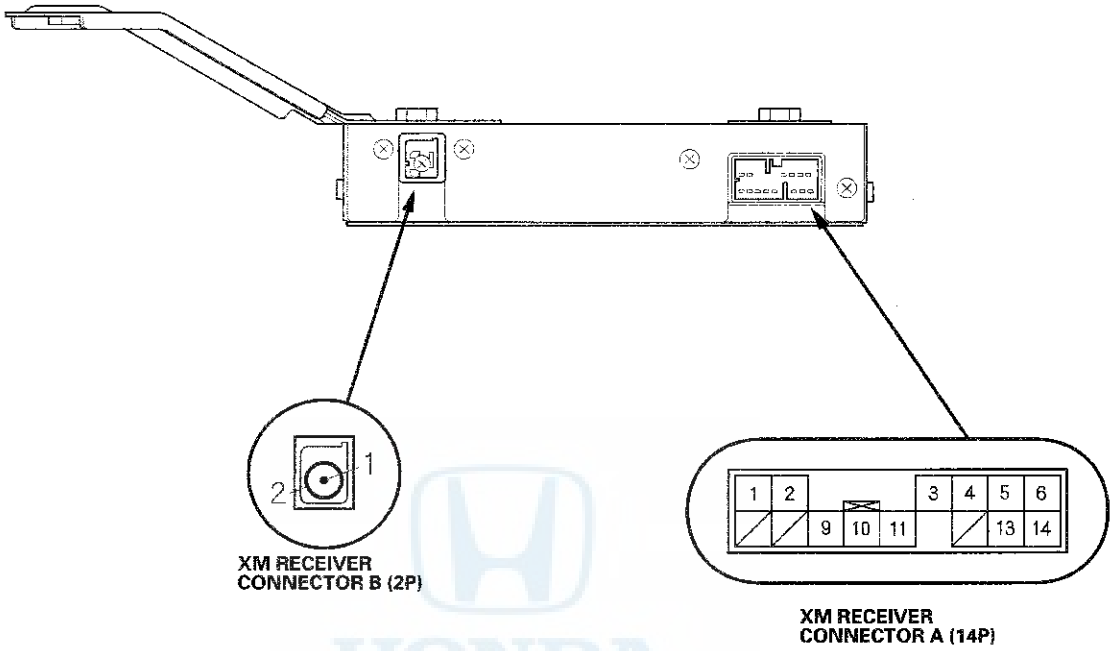

2-Door

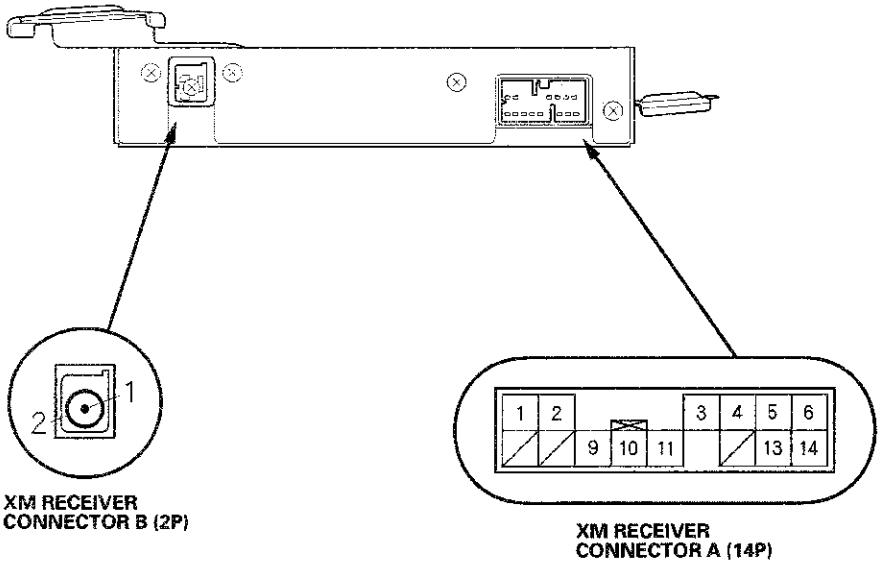

(cont'd)

System Description (cont'd)

XM RECEIVER CONNECTOR A (14P)

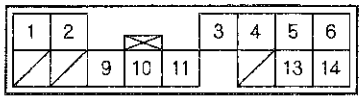

Terminal side of male terminals

XM RECEIVER CONNECTOR B (2P)

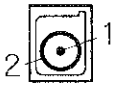

Terminal side of male terminals

XM Receiver Connector A (14P)

Cavity	Wire	Connects to
A1	WHT	XM receiver (+B)
A2	LT BLU	XM receiver (ACC) (SYS ON)
A3	BRN*2	Audio unit, Navigation unit*1, Navigation display unit*1 (GA-NET BUS SH)
A4	GRY*2	Audio unit (AUDIO SH)
A5	GRN	Audio unit (AUDIO R+)
A6	BLK	Audio unit (AUDIO L+)
A9	RED	Audio unit, Navigation unit*1, Navigation display unit*1 (GA-NET BUS+)
A10	GRN	Audio unit, Navigation unit*1, Navigation display unit*1 (GA-NET BUS−)
A11	BLK	Ground (G606) (GND)
A13	WHT	Audio unit (AUDIO R−)
A14	RED	Audio unit (AUDIO L−)

* 1: With navigation
* 2: The shielded wires have a heat-shrink tube insulating the outside of the wire. The color of the insulating tube, typically black or dark gray, may not match the color of the wire shown on the circuit diagram.

XM Receiver Connector B (2P)

Cavity	Wire	Connects to
B1	———	XM antenna (TER-SAT)
B2	———	XM antenna (SH-GND)

Auxiliary Jack Assembly Connector for Inputs and Outputs

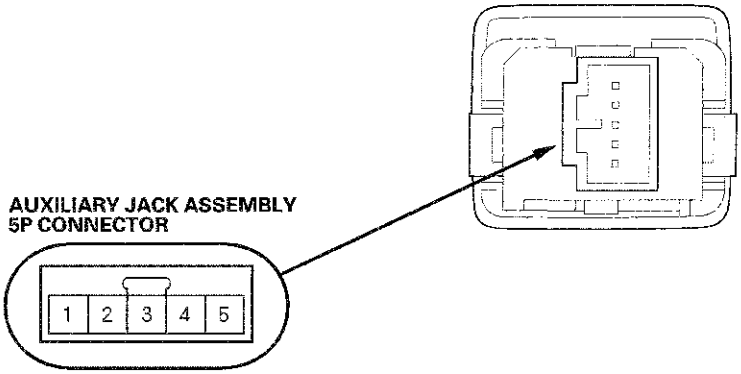

Auxiliary Jack Assembly 5P Connector

Cavity	Wire	Connects to
1	GRY	Audio unit (AUX DET)
2	YEL	Audio unit (AUX GND)
3	BLK	Audio unit (AUX SIG GND)
4	RED	Audio unit (AUX LCH)
5	WHT	Audio unit (AUX RCH)

HONDA

(cont'd)

System Description (cont'd)

Active Noise Cancellation Microphone Connector for Inputs and Outputs

Front (With Navigation)

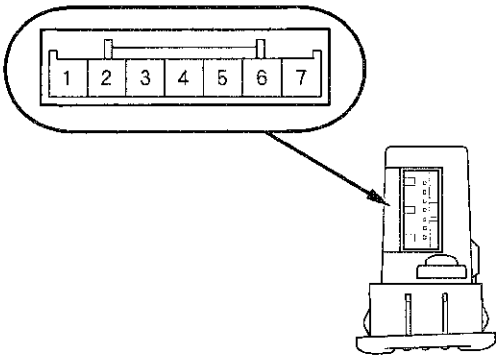

Front (Without navigation 6 CD type)

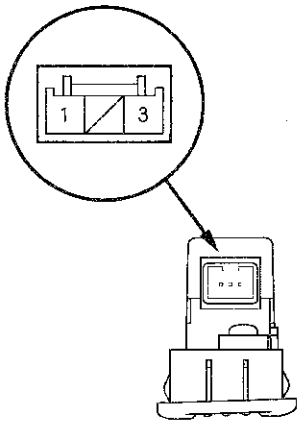

Rear

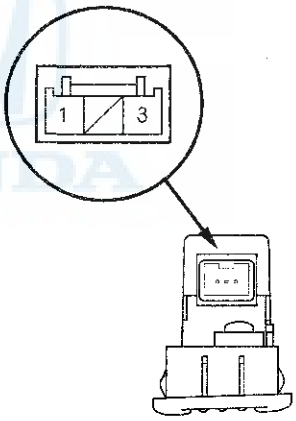

Active Noise Cancellation Front Microphone 7P (or 3P) Connector

Cavity	Wire	Connects to
1	BLK	Ground (G501)*1
	BLK*3	Audio unit (SH ANCM F GND)*2
2*1	GRY	HandsFreeLink control unit (MIC−)
3	BRN*1	HandsFreeLink control unit (MIC+)*1
	WHT*2	Audio unit (ANC F MIC 8 V)*2
4*1	WHT	Audio unit (ANC F MIC 8 V)
5*1	LT GRN	HandsFreeLink control unit, audio unit (HFL MUTE)
6*1	PUR	ACC (HFL-navigation-ANC microphone power supply)
7*1	WHT	Constant power (HFL-navigation-ANC microphone)

* 1: With navigation
* 2: Without navigation
* 3: The shielded wires have a heat-shrink tube insulating the outside of the wire. The color of the insulating tube, typically black or dark gray, may not match the color of the wire shown on the circuit diagram.

( ): Without navigation 6 CD type

Active Noise Cancellation Rear Microphone 3P Connector

Cavity	Wire	Connects to
1	GRY*	Audio unit (SH ANCM R GND)
3	WHT	Audio unit (ANC R MIC 8 V)

* : The shielded wires have a heat-shrink tube insulating the outside of the wire. The color of the insulating tube, typically black or dark gray, may not match the color of the wire shown on the circuit diagram.

(cont'd)

System Description (cont'd)

Audio Disc Changer Connector for Inputs and Outputs (With Navigation)

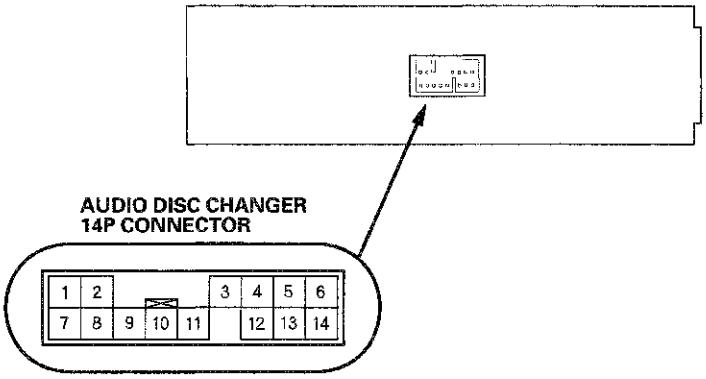

Audio Disc Changer 14P Connector

Cavity	Wire	Connects to
1	ORN	Audio unit (6 CD +B)
2	LT BLU	Audio unit (6 CD SYS ON)
3	GRY*	Audio unit (6 CD GA-NET BUS SH)
4	GRY*	Audio unit (6 CD AUDIO SH)
5	BLK	Audio unit (6 CD AUDIO R+)
6	RED	Audio unit (6 CD AUDIO L+)
8	BLU	Audio unit (6 CD ILL+)
9	GRN	Audio unit (6 CD GA-NET BUS+)
10	RED	Audio unit (6 CD GA-NET BUS−)
11	BLK	Audio unit (6 CD GND)
12	WHT	Audio unit (6 CD ILL−)
13	GRN	Audio unit (6 CD AUDIO R−)
14	WHT	Audio unit (6 CD AUDIO L−)

* : The shielded wires have a heat-shrink tube insulating the outside of the wire. The color of the insulating tube, typically black or dark gray, may not match the color of the wire shown on the circuit diagram.

Speaker Crossover Network Control Unit Connector for Inputs and Outputs

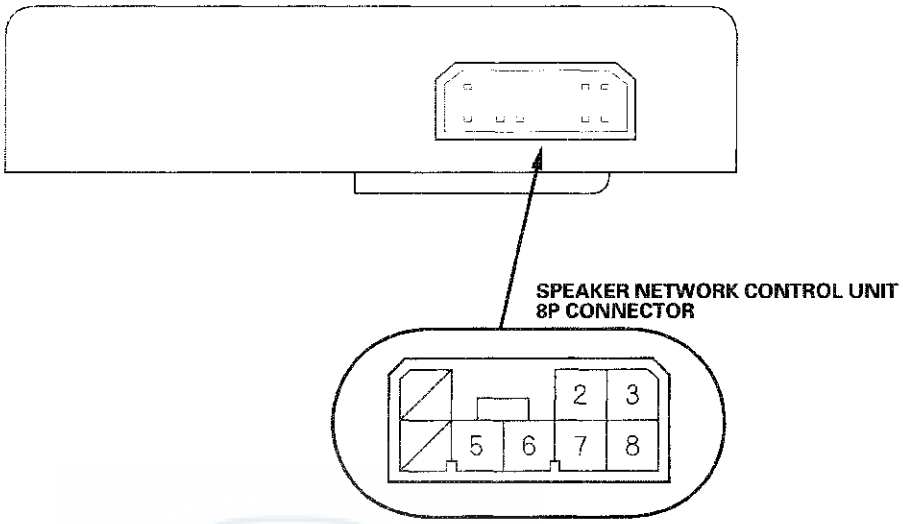

Driver's Door Speaker Crossover Network Control Unit 8P Connector

Cavity	Wire	Connects to
2	GRN	Stereo amplifier (FL SP+)
3	PUR	Stereo amplifier (FL SP−)
5	RED	Left front door tweeter (TWEETER+)
6	GRN	Left front door tweeter (TWEETER−)
7	LT GRN	Driver's door speaker (SPKR+)
8	PNK	Driver's door speaker (SPKR−)

Front Passenger's Door Speaker Crossover Network Control Unit 8P Connector

Cavity	Wire	Connects to
2	PNK	Stereo amplifier (FR SP+)
3	WHT	Stereo amplifier (FR SP−)
5	BRN	Right front door tweeter (TWEETER+)
6	WHT	Right front door tweeter (TWEETER−)
7	GRY	Front passenger's door speaker (SPKR+)
8	RED	Front passenger's door speaker (SPKR−)

(cont'd)

System Description (cont'd)

Audio-HVAC Subdisplay Unit Connector for Inputs and Outputs (With Navigation)

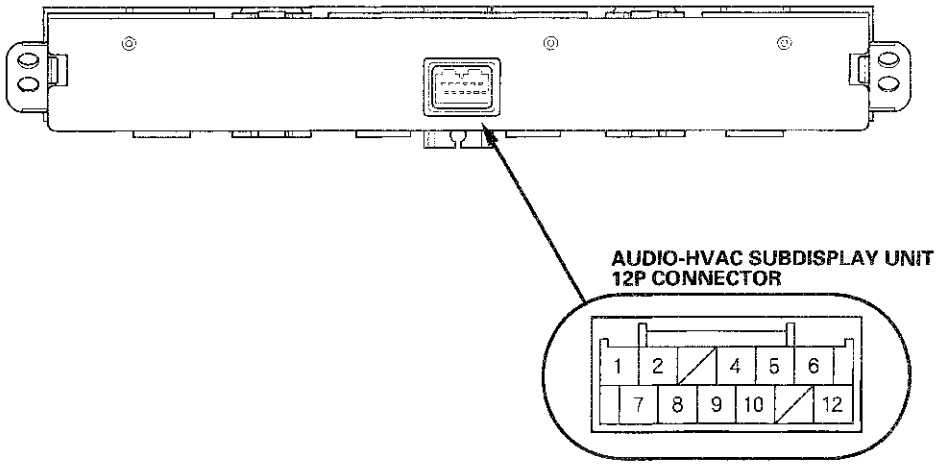

Audio-HVAC Subdisplay Unit 12P Connector

Cavity	Wire	Connects to
1	GRN	Audio unit (DUET RX (UART))
2	RED	Audio unit (DUET TX (UART))
4	BLU	Audio unit (DUET CONT)
5	LT GRN	Audio-HVAC subdisplay unit power supply (IG2)
6	WHT	Constant power (+B)
7	RED	Climate control unit (AC-CLK)
8	PUR	Climate control unit (AC-SO)
9	BLK	Ground (G401) (GND)
10	RED	Dash lights brightness controller (ILL−)
12	GRY	Lights-on signal (ILL+)

Audio-HVAC Display Unit Connector for Inputs and Outputs (Without Navigation)

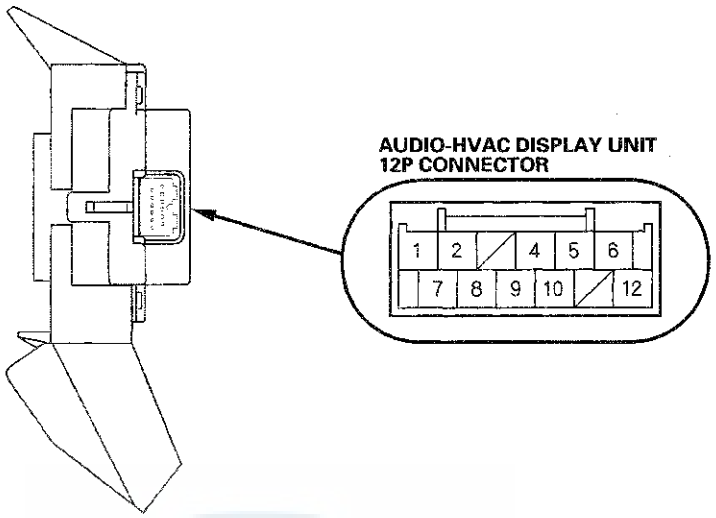

Audio-HVAC Display Unit 12P Connector

Cavity	Wire	Connects to
1	GRN	Audio unit (DUET RX (UART))
2	RED	Audio unit (DUET TX (UART))
4	BLU	Audio unit (DUET CONT)
5	LT GRN	Audio-HVAC display unit power supply (IG2)
6	WHT	Constant power (+B)
7*	RED	Climate control unit (AC-CLK)
8*	PUR	Climate control unit (AC-SO)
9	BLK	Ground (G401)
10	RED	Dash lights brightness controller (ILL−)
12	GRY	Lights-on signal (ILL+)

*: With climate control

Circuit Diagram

Premium Audio System with navigation

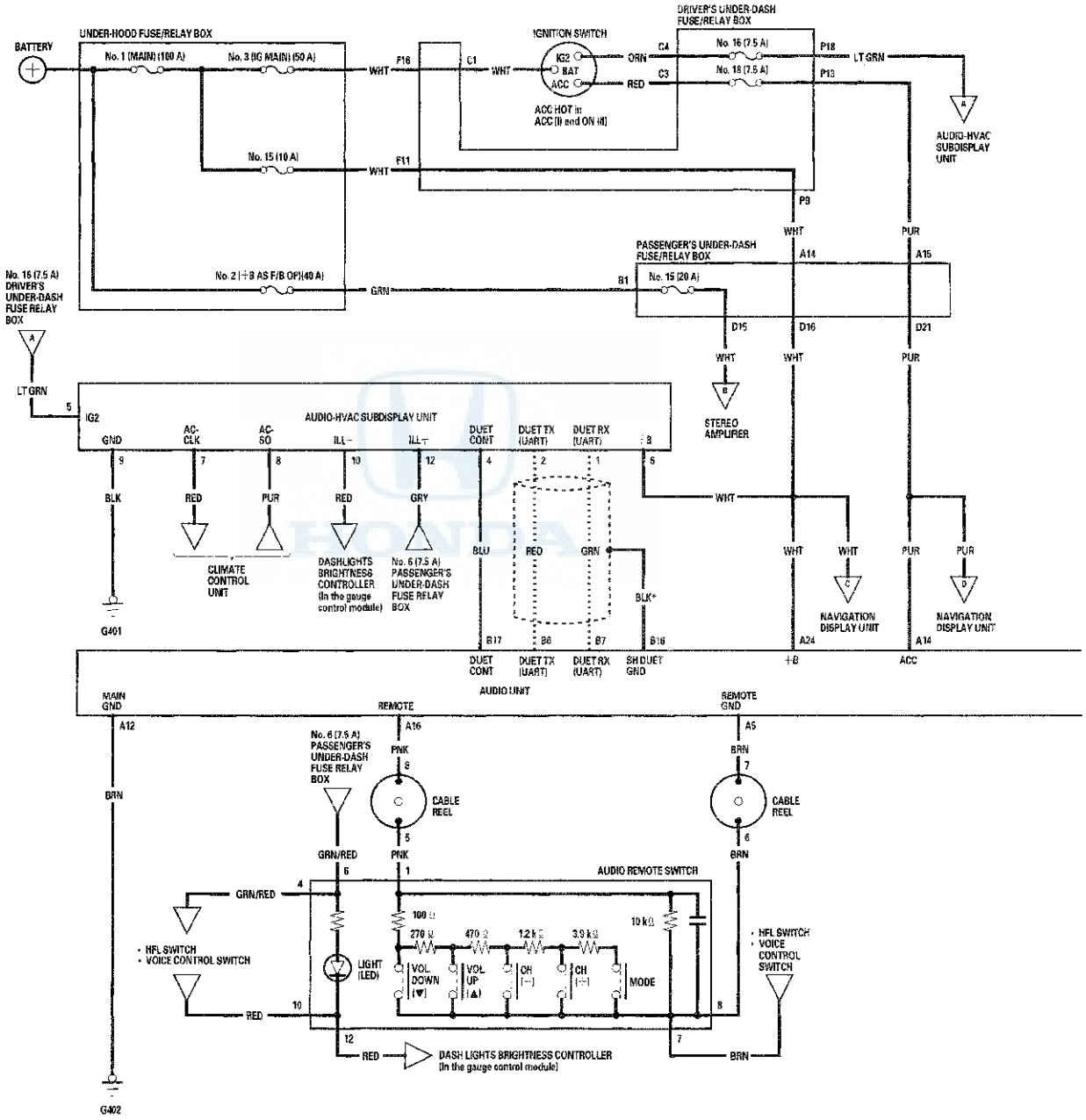

*: The shielded wires have a heat-shrunk tube insulating the outside of the wire. The color of the insulating tube, typically black or dark gray, may not match the color of the wire shown on the circuit diagram.

- - - - - - - - - : CAN line

· · · · · · · · · · · · : Other communication line

- - - - - - - - - - : Shielding

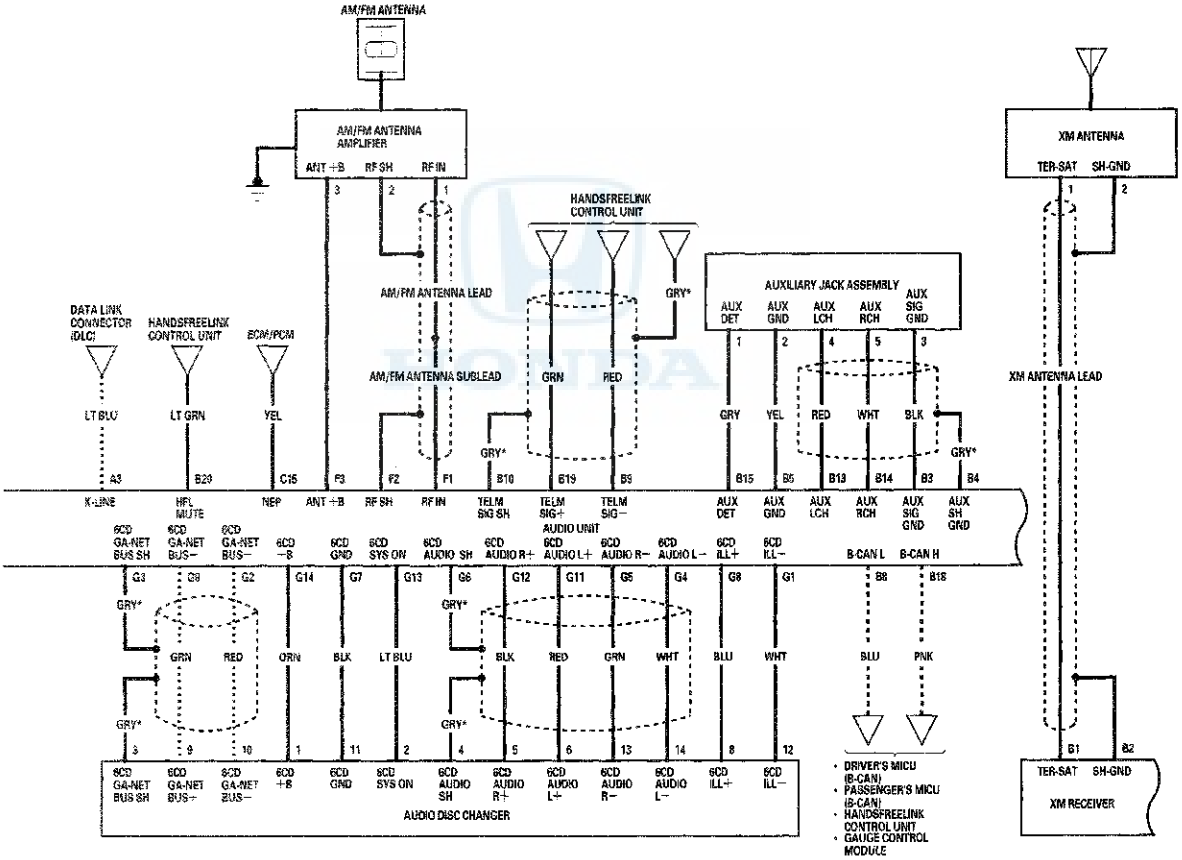

(cont'd)

Circuit Diagram (cont'd)

Premium Audio System with navigation

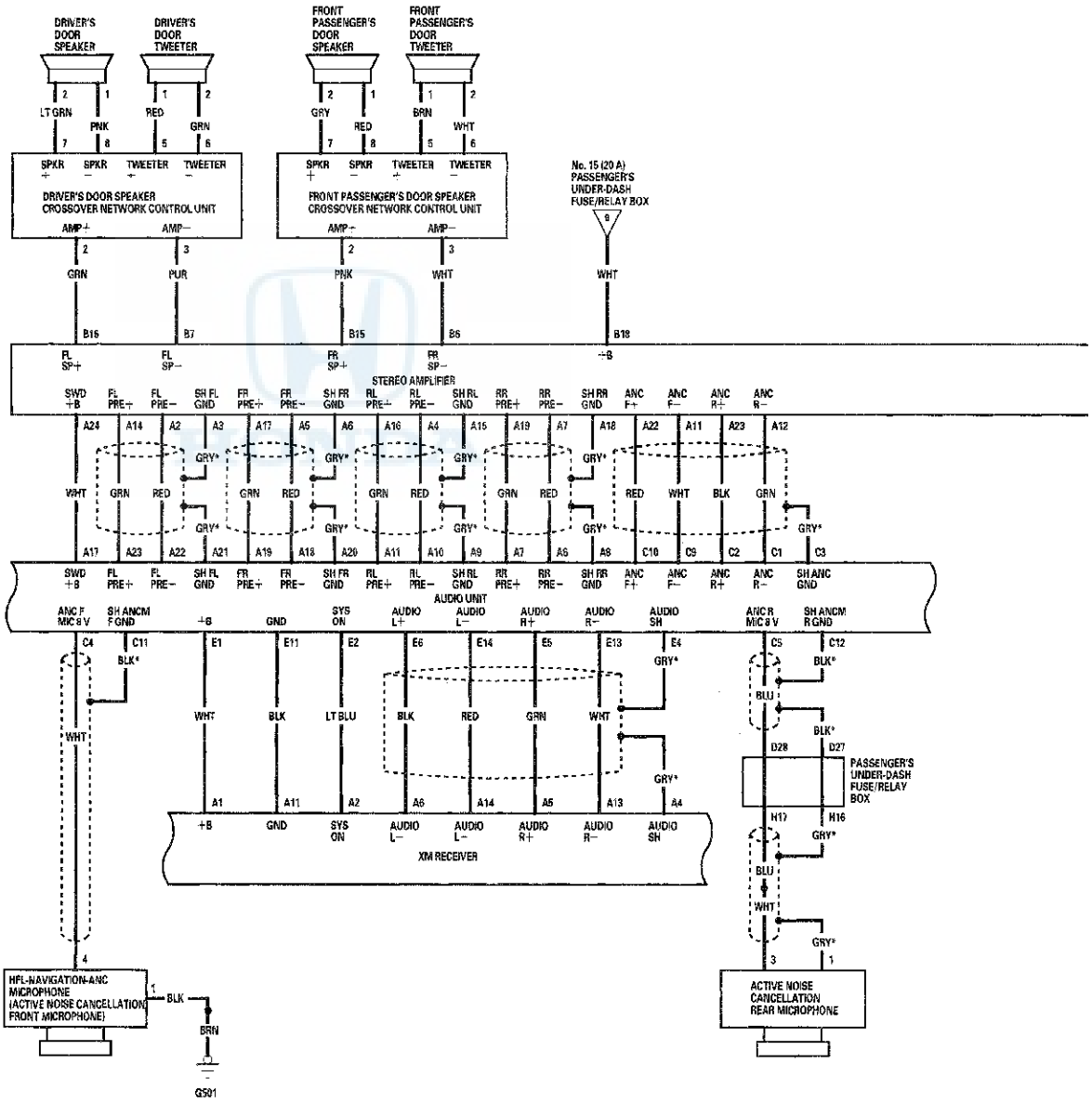

*: The shielded wires have a heat-shrunk tube insulating the outside of the wire. The color of the insulating tube, typically black or dark gray, may not match the color of the wire shown on the circuit diagram.

- - - - - - - - - - - : Other communication line

- - - - - - - - - - - : Shielding

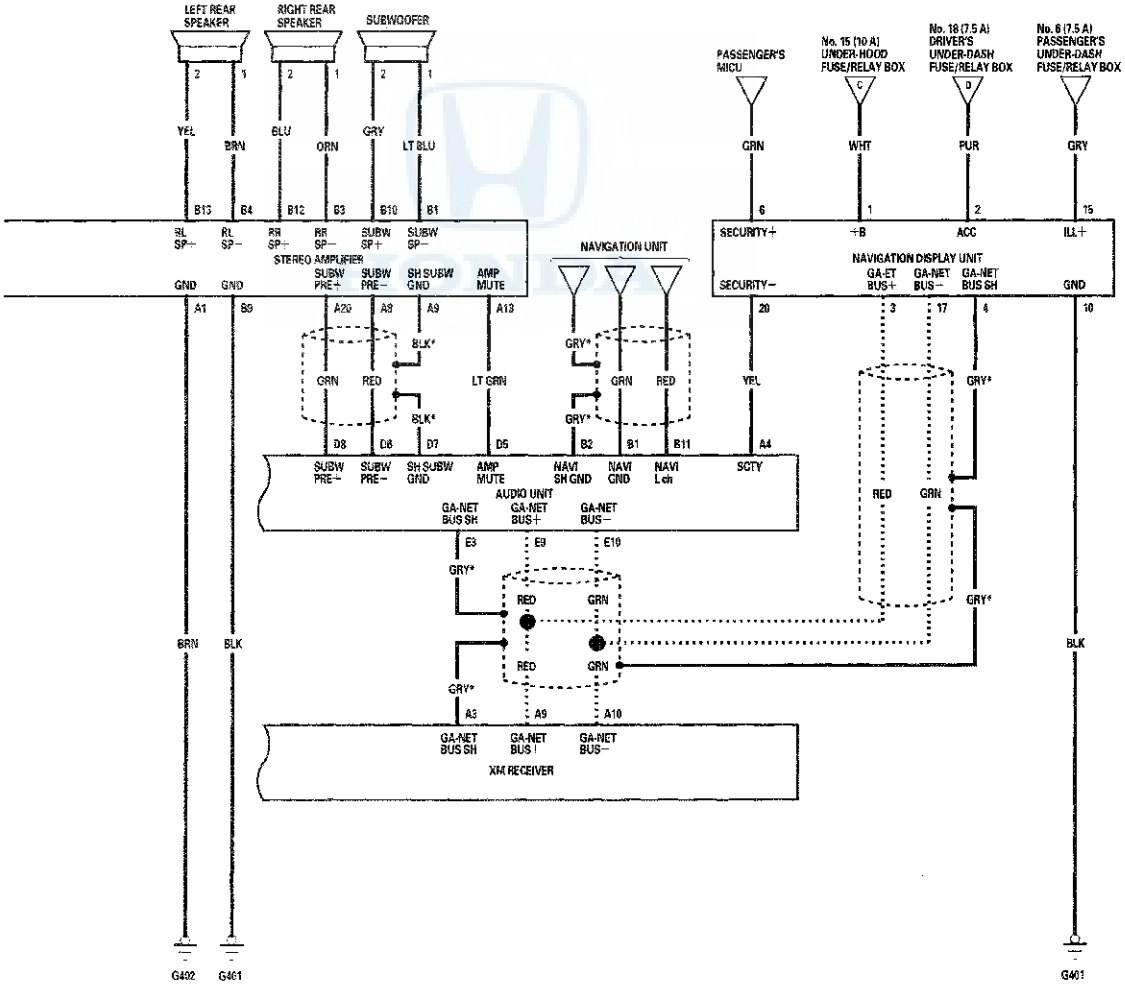

Circuit Diagram (cont'd)

Premium Audio System without navigation

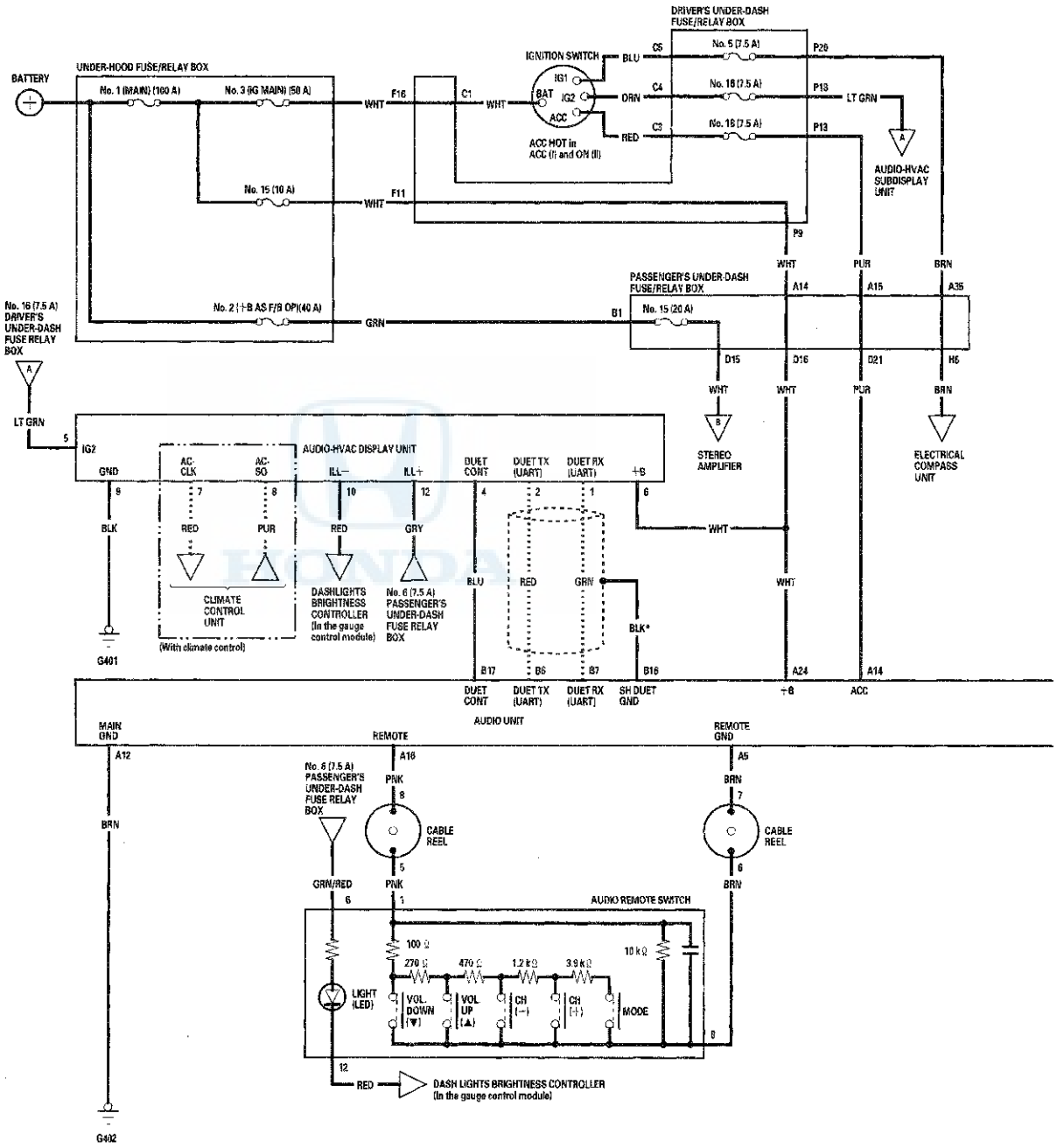

*: The shielded wires have a heat-shrunk tube insulating the outside of the wire. The color of the insulating tube, typically black or dark gray, may not match the color of the wire shown on the circuit diagram.

- - - - - - - - - - : CAN line

. . . . . : Other communication line

- - - - - - - - - - : Shielding

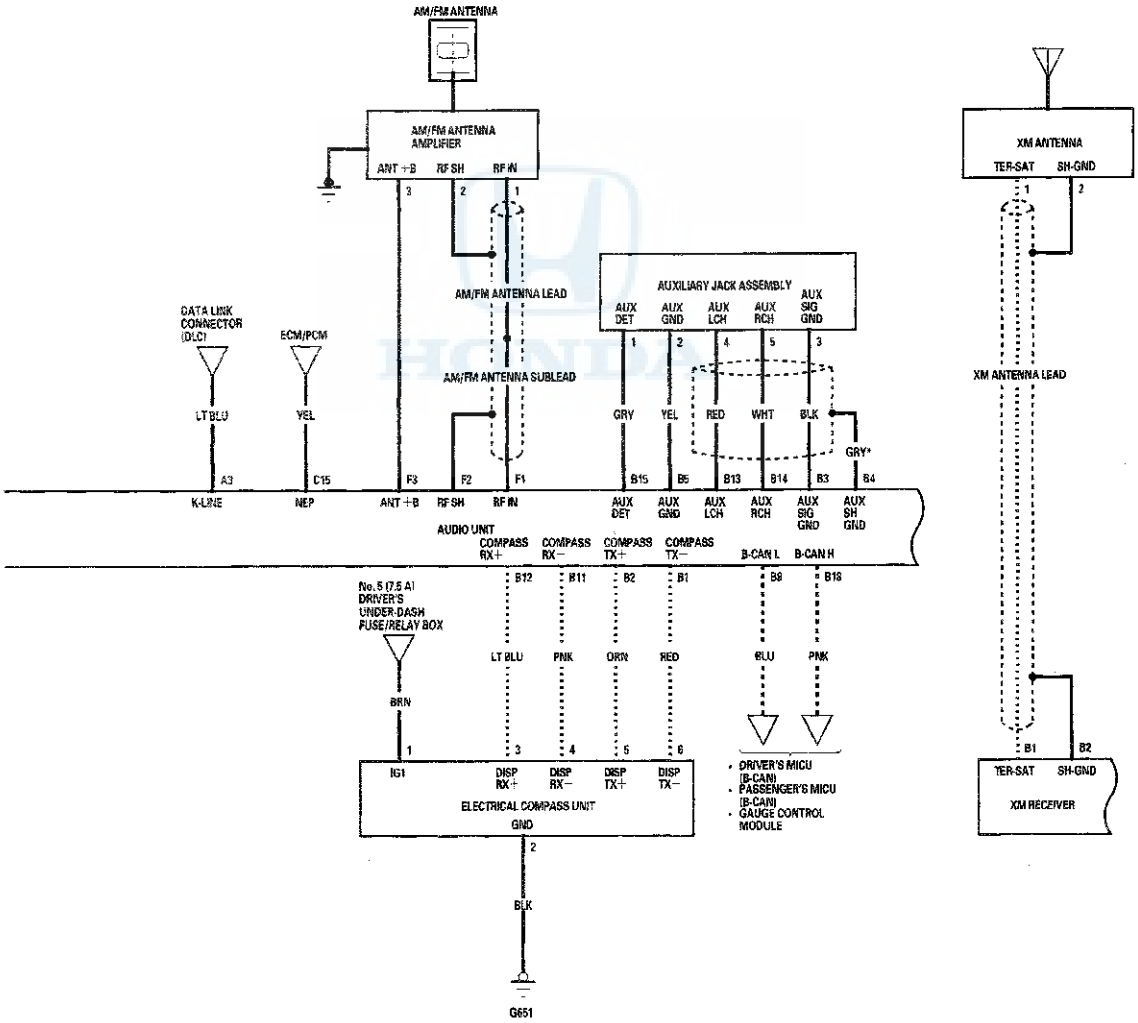

(cont'd)

Audio System

Circuit Diagram (cont'd)

Premium Audio System without navigation

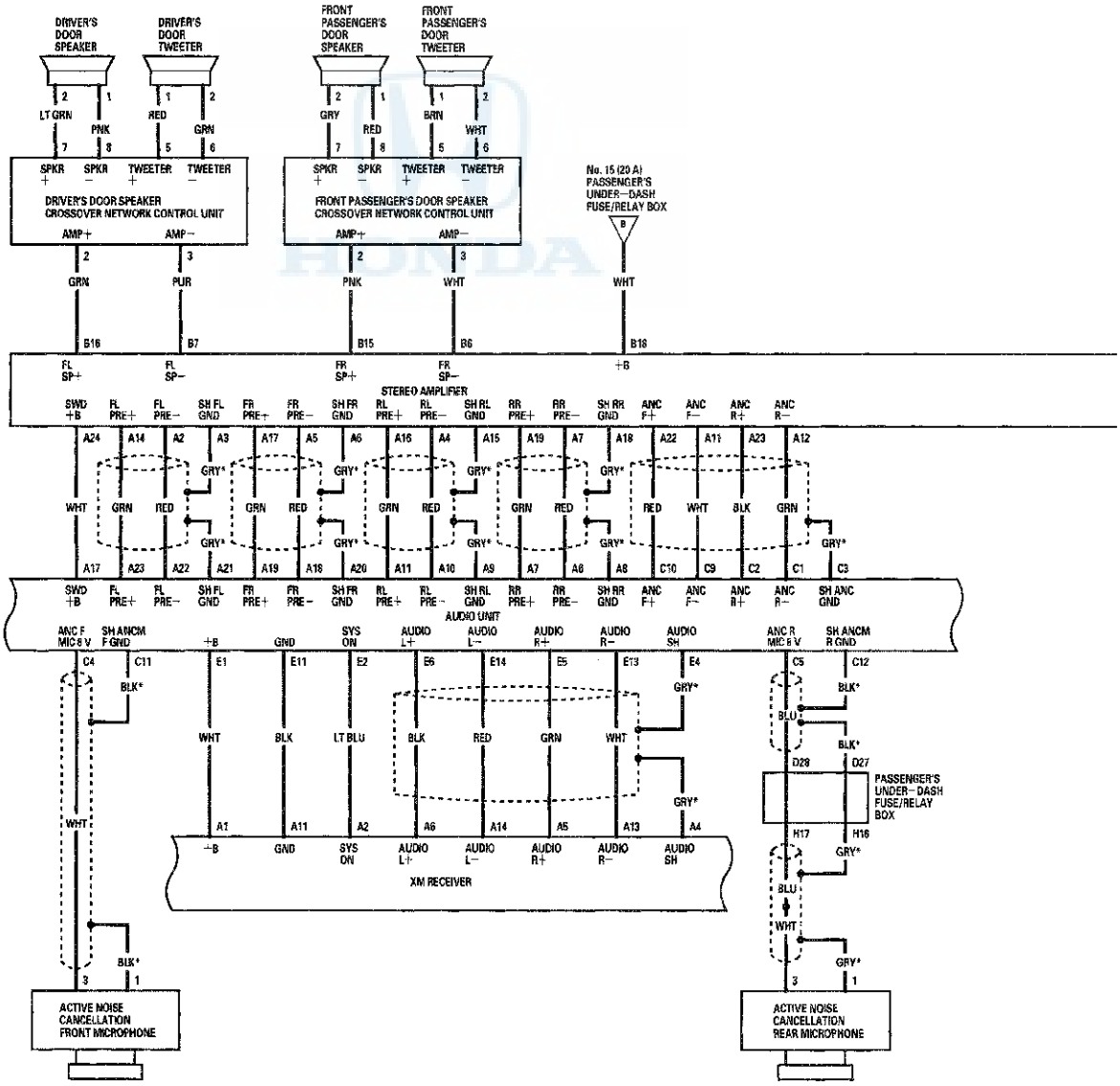

*: The shielded wires have a heat—shrink tube insulating the outside of the wire. The color of the insulating tube, typically black or dark gray, may not match the color of the wire shown on the circuit diagram.

: Other communication line

: Shielding

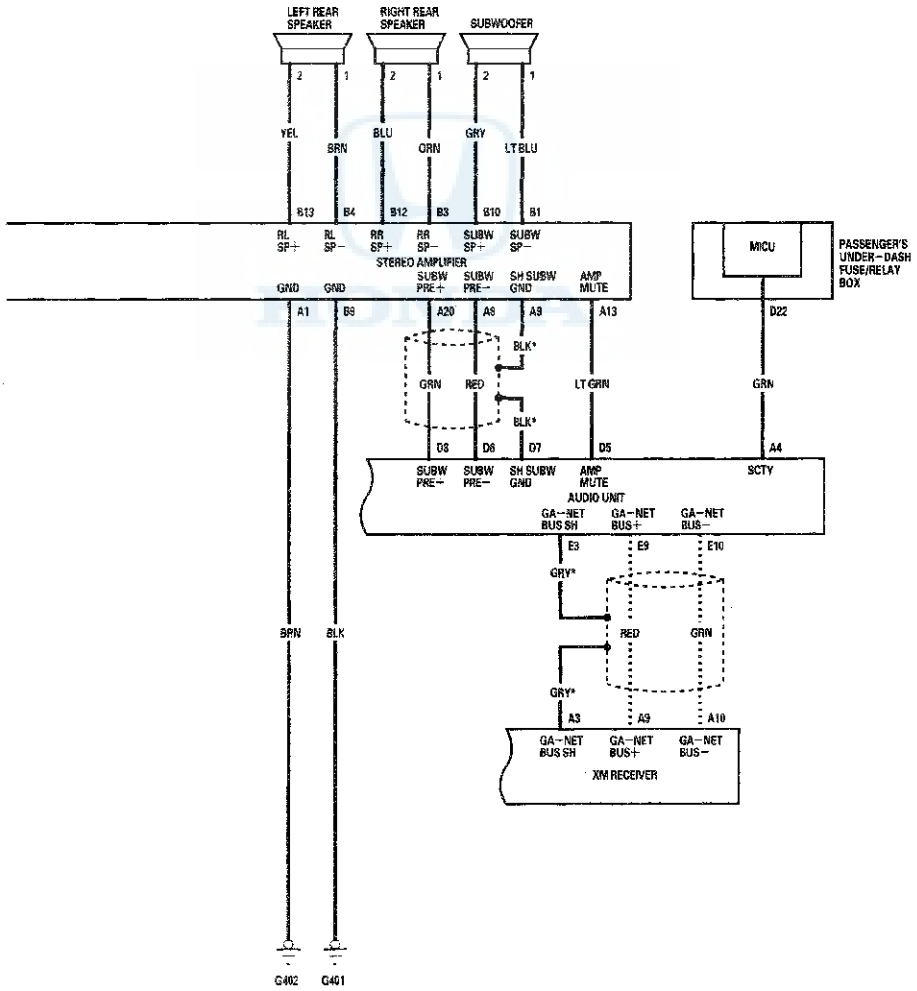

Circuit Diagram (cont'd)

Without Premium Audio System

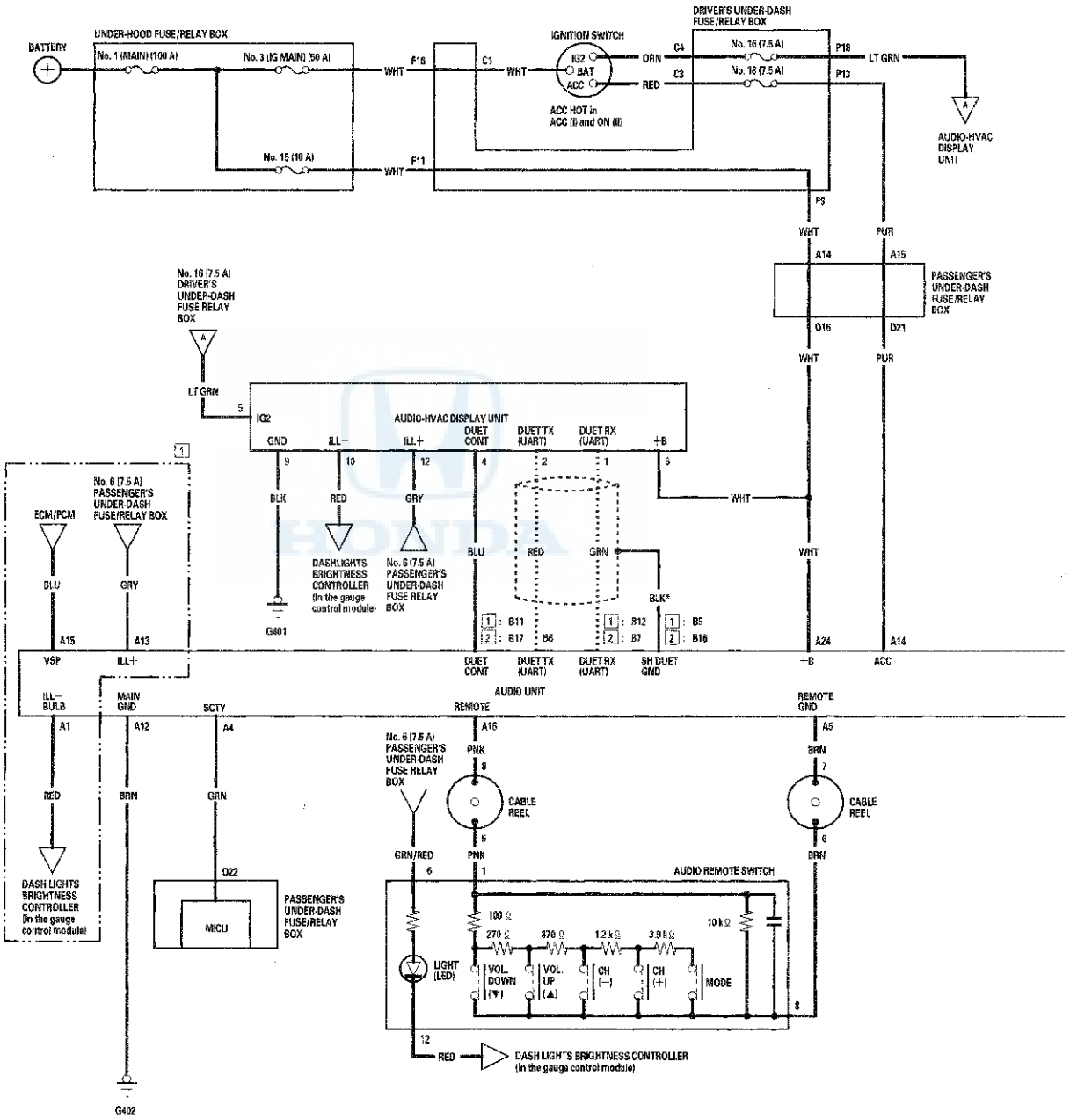

*: The shielded wires have a heat-shrink tube insulating the outside of the wire. The color of the insulating tube, typically black or dark gray, may not match the color of the wire shown on the circuit diagram.
1 : 10D type
2 : 6CD type
: CAN line
: Other communication line
: Shielding

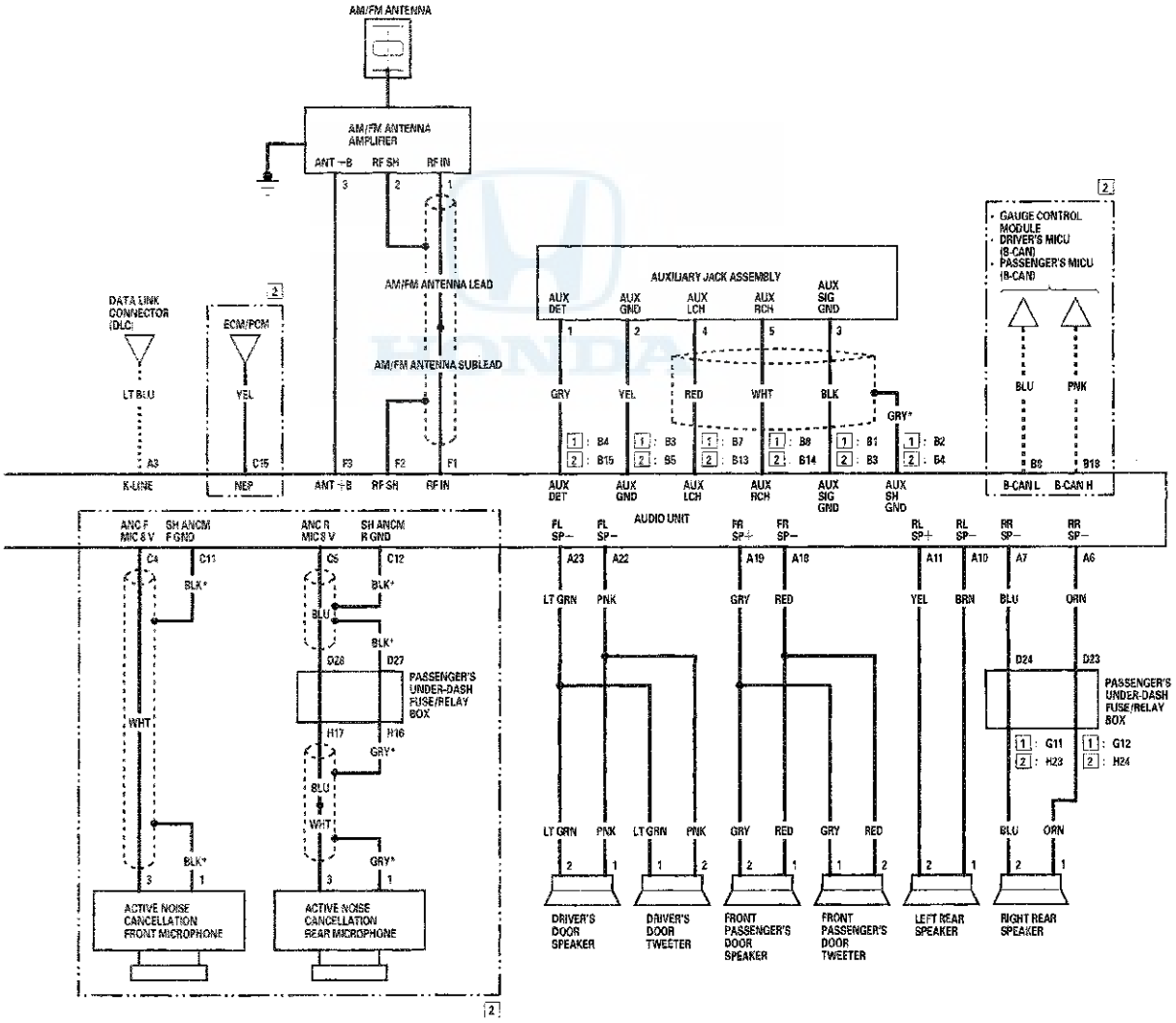

Self-diagnostic Function

The audio system has a self-diagnostic function.

NOTE:
- Not all self-diagnostic functions appear on all models.
- There may be other self-diagnostic functions that are for factory use only.

How to Use the Audio System Self-diagnostic Function

1. Turn the ignition switch to ON (II). Turn the audio unit off.

2. Push and hold the No. 1 and No. 6 buttons. While holding the buttons, push the VOL PUSH PWR knob to on. Release the buttons and the self-diagnostic function begins.

With navigation

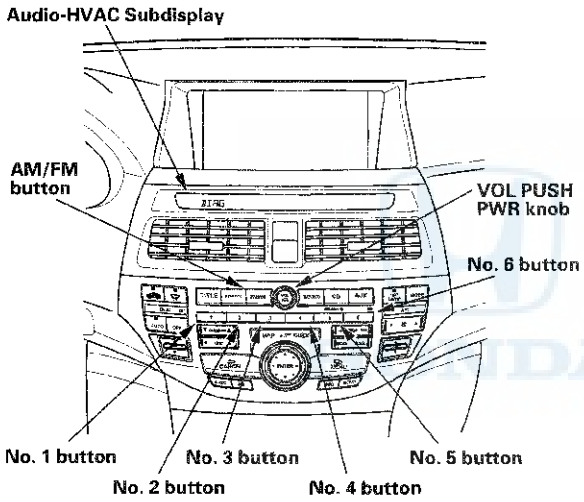

Without navigation 6 CD type

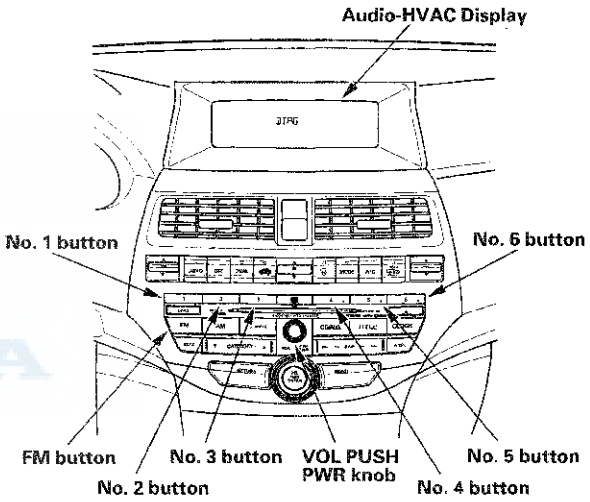

Without navigation 1 CD type

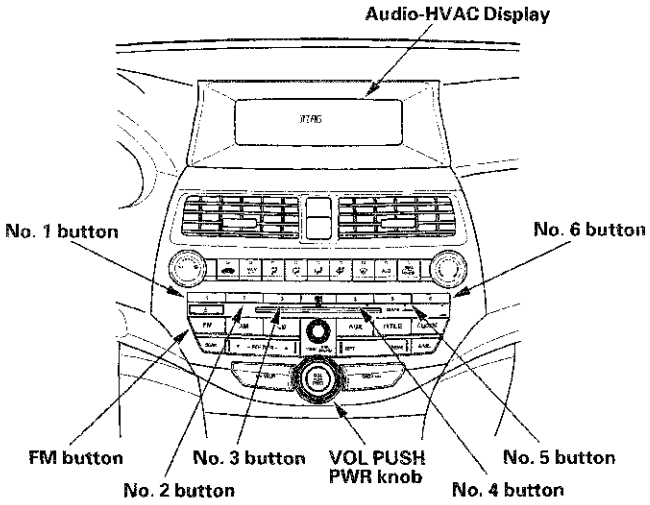

3. By pressing a preset button, the input starts the diagnostic mode that is assigned to that preset switch.

No. 2 button
Audio button, knob, and remote switch detection: Allows individual manual selection of all audio panel knobs, buttons, and remote switches to verify if they are functional. When properly detected, the applied knob button, or remote switch name and/or value is displayed. To exit this mode, go to step 4.

No. 3 button
Entire LCD lighting/light-out mode: Turns on/off the entire LCD to show the presence or absence of an LCD failure.

No. 4 button
Illumination level indication mode: Indicates the duty cycle for the illumination dimmer control of the gauge assembly.

Gauge dimmer control values:
Headlights off: OFF
Headlights on: 01 (max low) through 22 (max high)

No. 5 button
Vehicle speed pulse indication mode: Indicates the Vehicle speed pulse.

AM/FM or FM button (Push and hold 5 sec.)
Reception level check mode: Indicates the reception level. When entering the reception level check mode, the AM/FM button or FM button is used to change the main/sub antenna.

How to Obtain the Audio Unit Serial Number

NOTE: This procedure can only be done after the power has been disconnected once and reconnected to the audio unit, and the audio-HVAC display displays CODE. With the audio unit switched off, push and hold the preset button No. 1, No. 6 and the VOL PUSH PWR knob, then release. The audio unit displays the eight digit serial number (example 12345678). Use the eight digit serial number when using the interactive network (iN) to get the 5 digit anti-theft codes.

Serial Number

With navigation

S/N 12345678

Without navigation (Premium, 6 CD, 1 CD)

S/N 12345678

(cont'd)

Self-diagnostic Function (cont'd)

4. The self-diagnostic function ends when you turn the audio unit off or turn the ignition switch to LOCK (0).

   NOTE: Any other diagnostic screens shown are for factory use only.

Display Specifications

Entry LCD lighting mode (press No. 3 button)
This diagnostic screen checks for segments that may be dead (off).
The entire display must appear. If there are dead segments, replace the applicable display unit.

With navigation

Without navigation (Premium, 6 CD, 1 CD)

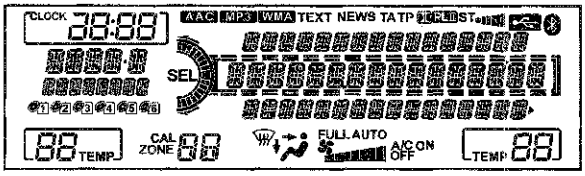

Entry LCD lights-outs mode (press No. 3 button)
This diagnostic screen checks for segments that may be stuck on.
The entire display must black. If the segments are stuck on, replace the applicable display unit.

With navigation

Without navigation (Premium, 6 CD, 1 CD)

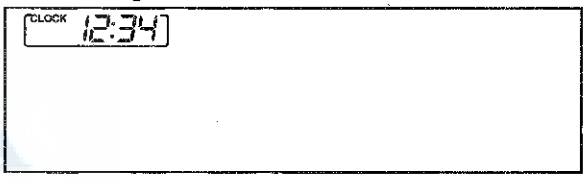

Illumination level (for the gauge illumination) indication (press No. 4 button)
This diagnostic screen checks the gauge illumination. If the headlights are off, the display reads OFF.
If the headlight are on, you should see a values between 01 (max low) and 22 max high.
When you dim and brighten the gauge, you should see this value change accordingly.
If it doesn't, check for B-CAN DTCs.

With navigation

Without navigation (Premium, 6 CD, 1 CD)

Vehicle speed pulse indication (press No. 5 button)
This diagnostic screen checks that the audio unit is receiving the VSP indication.
When you drive the vehicle, the VSP indicates the vehicle speed in km/h.

With navigation

Without navigation (Premium, 6 CD, 1 CD)

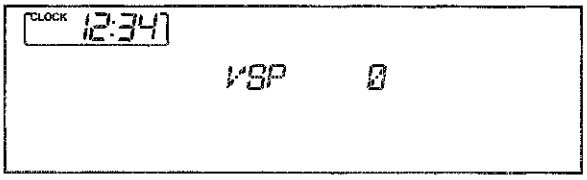

Reception level indication (Push and hold 5 sec AM/FM or FM button.)
This diagnostic screen checks the audiio units reception level that can be used in diagnosis to check the audio reception quality.

With navigation

Without navigation (Premium, 6 CD, 1 CD)

Without Navigation
To check the AM or FM reception, press and hold the applicable band button for 5 seconds, then release. The reception level is displayed in decibels (db). You can check the reception with or without the amplifier. Press the A. SEL button to toggle between turning the amplifier on and off. The amplifier is on when the letter A appears next to the db indication. You can change the station with the tuner button to check the reception level of any specific radio station. Compare this value with a known-good vehicle to check the audio unit reception.

With Navigation
To check the FM reception, press and hold the AM/FM button for 5 seconds, then release. To check the AM band, press and hold the AM/FM button for another five seconds, then release. The reception level is displayed in decibels (db). You can check the reception with or without the amplifier. Press the A. SEL button to toggle between turning the amplifier on and off. The amplifier is on when the letter A appears next to the db indication. You can change the station with the tuner button to check the reception level of any specific radio station. Compare this value with a known-good vehicle to check the audio unit reception.

HONDA

(cont'd)

Self-diagnostic Function (cont'd)

Speaker Check Mode

NOTE:
- Not all self-diagnostic functions appear on all models.
- There may be other self-diagnostic functions that are for factory use only.

1. Turn the ignition switch to ON (II). Turn the audio unit off.

2. Push and hold the No. 1 and No. 3 buttons. While holding the buttons, push the VOL PUSH PWR knob to on. Release the buttons and the speaker check mode begins. A tone test should sound from one speaker.

   NOTE: Make sure the volume is set to a normal or slightly higher than normal volume and set the balance and fader to the center position.

3. Each time you press the SKIP button, the test moves to the next speaker in the order listed.

With navigation

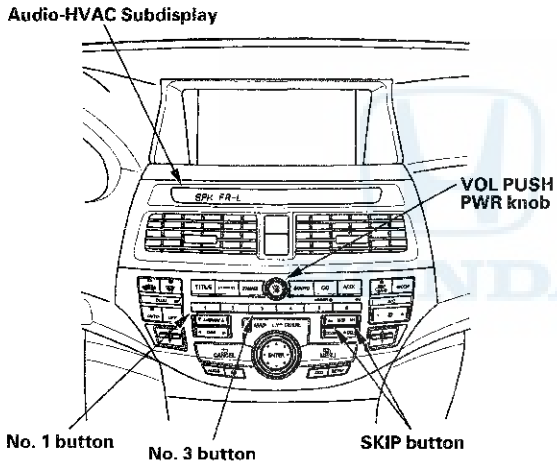

Without navigation 6 CD type

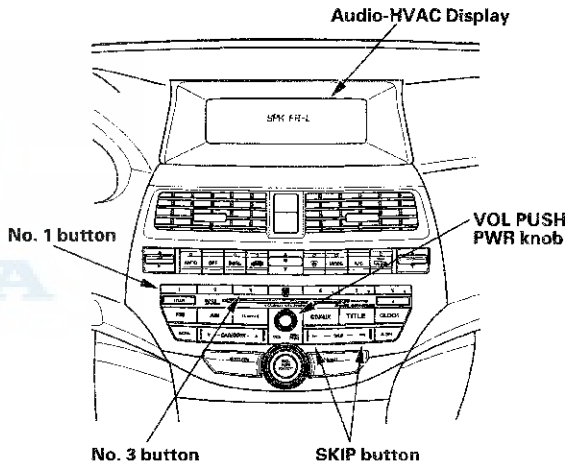

Without navigstion 1 CD type

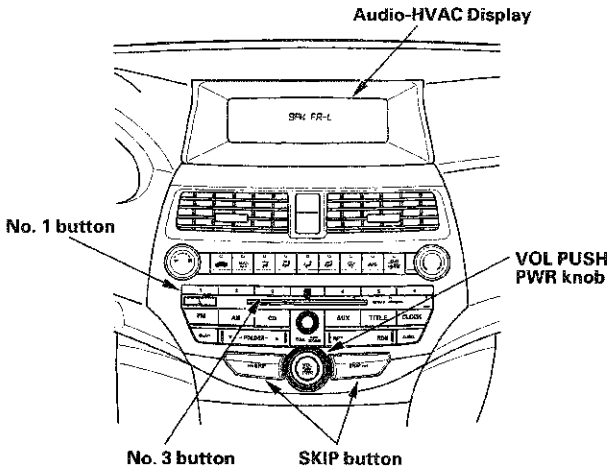

Display Specifications

With Premium Audio System

(▶▶|) is pressed: ①→②→③→④→⑤→⑥

(|◀◀) is pressed: ①→⑥→⑤→④→③→②

Without Premium Audio System

(▶▶|) is pressed: ①→②→③→⑤→⑥

(|◀◀) is pressed: ①→⑥→⑤→③→②

	Speaker	Displayed Segments	Remarks
①	Driver's door speaker and tweeter	SPK FR-L	You should hear a low frequency tone
②	Front Passenger's door speaker and tweeter	SPK FR-R	You should hear a low frequency tone
③	Right rear speaker	SPK RR-R	You should hear a low frequency tone
④	Subwoofer*	SPK SUBW	You should hear a low frequency tone
⑤	Left rear speaker	SPK RR-L	You should hear a low frequency tone
⑥	All speakers	SPK ALL	• You should hear a low frequency tone • The subwoofer does not sound a tone

*: With Premium Audio System

4. The speaker check mode ends when you turn the audio unit off or turn the ignition switch to LOCK (0).

   NOTE: Any other diagnostic screens are shown for factory use only.

(cont'd)

Self-diagnostic Function (cont'd)

Active Noise Cancellation (ANC) System Check Mode

NOTE:
- Not all self-diagnostic functions appear on all models.
- There may be other self-diagnostic functions that are for factory use only.
- Only perform this test when you are guided from a troubleshooting procedure.
- The ANC function is not supported for 1 CD type.
- To restart the ANC check mode, turn the ignition switch to LOCK (0), then enter the check mode.

1. Turn the ignition switch to ON (II).

   NOTE: Make sure the audio system is turned off.

2. Push and hold the No. 1 and No. 6 buttons. While holding the buttons, push the VOL PUSH PWR knob to ON.

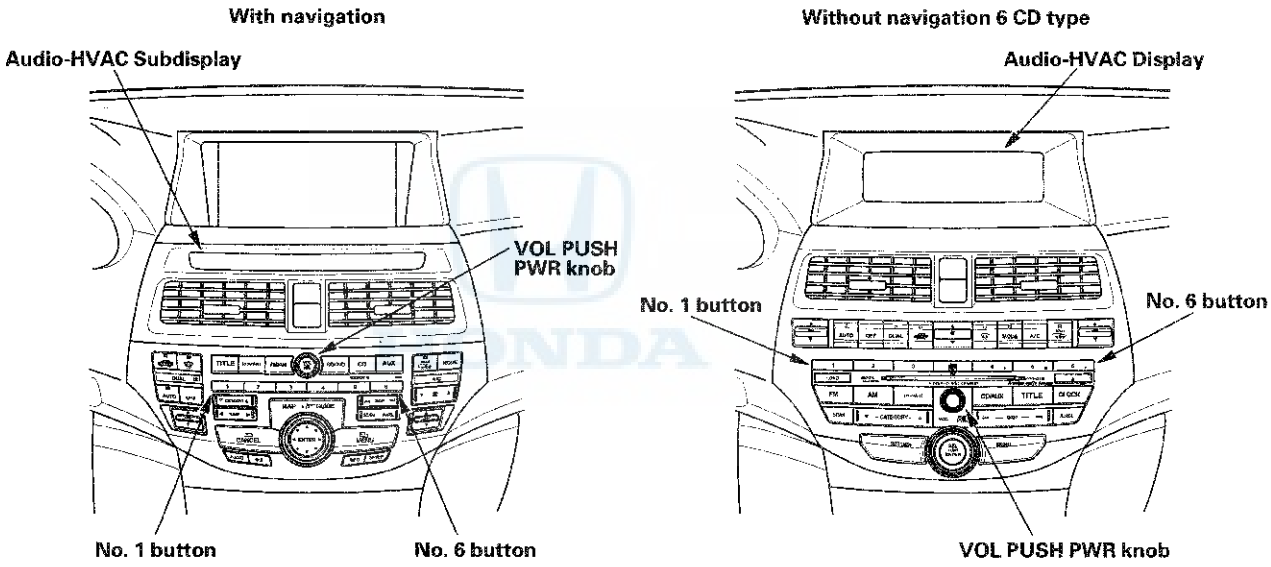

3. Press the No. 1 button, the active noise cancellation (ANC) system check mode begins.

How to check the active noise cancellation system in this check mode

- While in this system check mode, press the No. 1 button to move to the next test item.
- You must remember how many times you pressed the No. 1 button. The system will not show which test item you are doing.
- For test items 1st to 10th, the speaker will make a low-frequency hum (50 Hz) when the system is normal for more than 5 seconds up to 1 minute.
- When there is a failure in the system, the speaker will not make a low-frequency hum (50 Hz) or the hum will stop within 5 seconds for test items 1st to 10th.
- The check mode will be automatically cancelled when the time reaches 1 minute after the starting each test items.
- When you once reach to test item 11th, the test will loop ON and OFF in test item 11th.
- This check mode ends when you start the engine (ignition switch in start (III) or turn the ignition switch to LOCK (0)), because the power to the audio system will be cut off.
- If you need to check test item 2nd, 7th and/or 11th, start the check mode with the engine idling. Other test items are available with the engine idling or stopped.

Test Item No.	Test Item	Button Operation	Number of Times No. 1 button is pressed	Display ON/OFF	Sound from Speakers when System is Normal	Test Available Condition
———	Self-Diagnostic mode enter	Turn the audio unit off, press and hold preset buttons No. 1 and No. 6, then turn the audio unit on	———	———	None	
1st	Microphone input, speaker output	No. 1	1	ON	None	Any conditions
		No. 1	2	OFF	50 Hz hum for 1 minute	
2nd	NEP input, door/ trunk switch input	No. 1	3	ON	None	• Engine idling • All doors/trunk closed
		No. 1	4	OFF	50 Hz hum for 1 minute	
3rd	Front speaker output	No. 1	5	ON	None	Any conditions
		No. 1	6	OFF	50 Hz hum for 1 minute	
4th	Rear speaker output	No. 1	7	ON	None	Any conditions
		No. 1	8	OFF	50 Hz hum for 1 minute	
5th	ANC front microphone input	No. 1	9	ON	None	Any conditions
		No. 1	10	OFF	50 Hz hum for 1 minute	
6th	ANC rear microphone input	No. 1	11	ON	None	Any conditions
		No. 1	12	OFF	50 Hz hum for 1 minute	
7th	NEP (engine speed signal) input	No. 1	13	ON	None	Engine idling
		No. 1	14	OFF	50 Hz hum for 1 minute	
8th	Door/trunk switch input	No. 1	15	ON	None	All doors/trunk closed
		No. 1	16	OFF	50 Hz hum for 1 minute	
9th	———	No. 1	17	ON	None	———
		No. 1	18	OFF	None	
10th	———	No. 1	19	ON	None	———
		No. 1	20	OFF	None	
11th	ANC operation ON/ OFF	No. 1	21	ON	None	• Engine speed about 2,500 rpm (A/T in P or N, M/T in neutral) • Repeatedly pressing the No. 1 button switches the ANC on and off
		No. 1	22	OFF	Engine noise reduced	

(cont'd)

Self-diagnostic Function (cont'd)

Active Noise Control ON

With navigation

NP 11 ON 10 10000

Without navigation 6 CD type

CLOCK 12:34

6P 12 ON

Active Noise Control OFF

With navigation

NP 11 OFF 10 10000

Without navigation 6 CD type

CLOCK 12:34

6P 12 OFF

4. The self-diagnostic function ends when the audio system is turned off, or the ignition switch is turned to LOCK (0).

Communication Connection Check Mode

NOTE:
- Not all self-diagnostic functions appear on all models.
- There may be other self-diagnostic functions that are for factory use only.

1. Turn the ignition switch to ON (II). Turn the audio unit off.

2. Push and hold the No. 1 and No. 6 buttons. While holding the buttons, push the VOL PUSH PWR knob to on. Release the buttons.

3. Press the No. 6 button, and the communication connection check mode begins.

With navigation

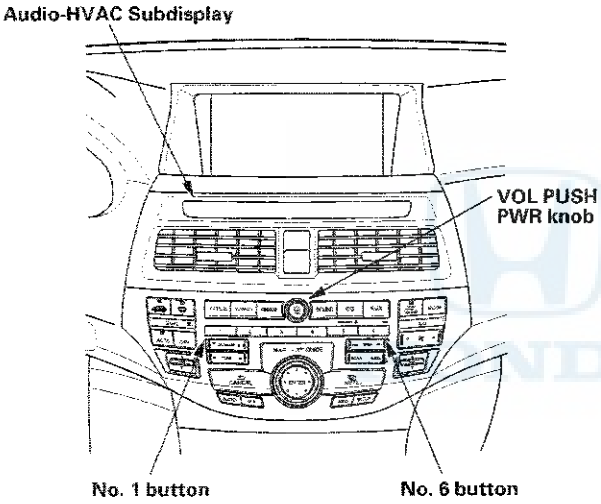

Without navigation 6 CD type

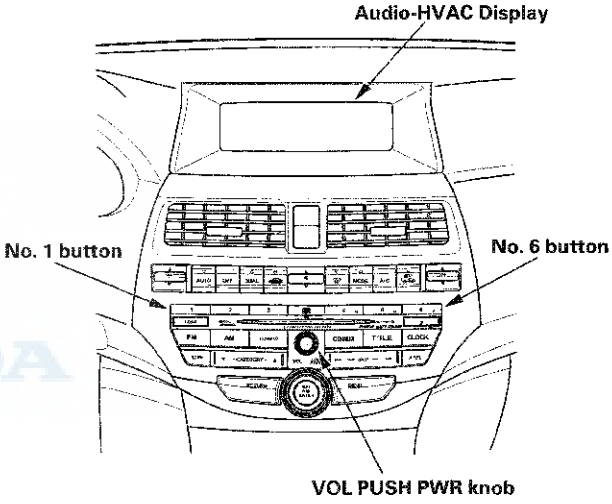

Without navigation 1 CD type

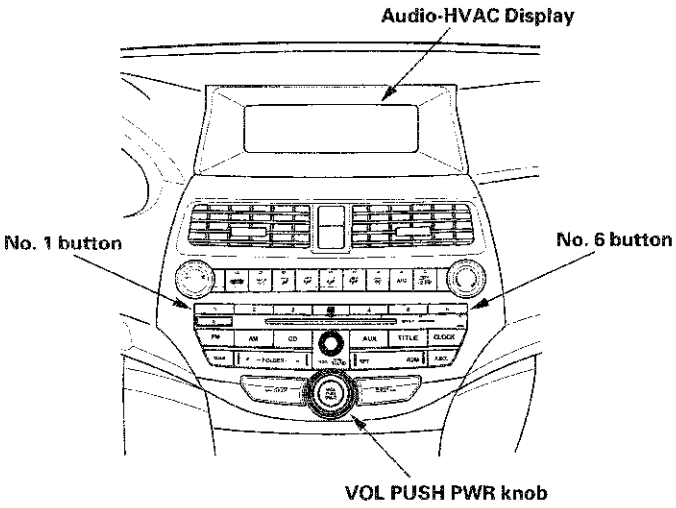

(cont'd)

Self-diagnostic Function (cont'd)

4. Each time you press the No. 6 button, the communication connection state is displayed in the following order.

   NOTE: If the audio-HVAC subdisplay or the audio-HVAC display is blank in all headlight positions, or blank only when the headlights are turned on, check for B-CAN DTCs.

Display Specifications (With navigation)

Displayed Segments	State	Remarks
DSP OK	The audio-HVAC subdisplay unit or the audio-HVAC display unit is connected.	
DSP NG	The audio-HVAC subdisplay unit or the audio-HVAC display unit is not connected.	
AC OK	The climate control unit is connected.	
AC NG	The climate control unit is not connected.	
AMP OK 00	The stereo amplifier is connected.	Applicable to the premium audio system
AMP OK 04	The stereo amplifier is connected (Error has occurred four times in the past).	Applicable to the premium audio system
AMP NG	The stereo amplifier is not connected.	Applicable to the premium audio system

Display Specifications (Without navigation (Premium, 6 CD, 1 CD))

Displayed Segments	State	Remarks
01 119	The XM receiver unit is not connected.	Applicable to the premium audio system.
02 183	The navigation unit is not connected.	
ANT ———	The antenna amplifier is connected.	
ANT CHK	The antenna amplifier is not connected.	
AMP ———	The stereo amplifier is connected.	Applicable to the premium audio system.
AMP CHK	The stereo amplifier is not connected.	Applicable to the premium audio system.
AMP 0100	The stereo amplifier is connected.	Applicable to the premium audio system.
AMP NG 04	The stereo amplifier is not connected (error has occurred four times in the past).	Applicable to the premium audio system.
AC OK	The climate control unit is connected.	
AC NG	The climate control unit is not connected.	
CMP OK	The electrical compass unit is connected.	Applicable to the premium audio system.
CMP NG	The electrical compass unit is not connected.	Applicable to the premium audio system.
LCD 0100	The audio-HVAC display unit is connected.	
LCD NG	The audio-HVAC display unit is not connected.	

NOTE: Any other diagnostic screens are shown for the manufacturer's purpose only.

5. The self-diagnostic function ends when you turn the audio unit off or turn the ignition switch to LOCK (0).

Error Codes

The audio system can display error codes when a problem is detected with the audio disc changer, the audio disc, the XM radio, or the anti-theft code.

CD Error Codes

Error Code Displayed	Possible Cause	Solution
HEAT ERROR	Disc player is hot. This can happen if the vehicle is parked out in the hot sun all day.	Park the vehicle in a cooler place for a while and try the disc player again. If the error code is still present, try another disc. If the error code is still present, replace the audio unit.
UNSUPPORTED	Track/File format not supported.	• Current track is skipped. The next supported track of file plays automatically. • Verify that CD, CD-R, or CD-RW file names end in CD-A or WAV. • Verify that CD, CD-R, or CD-RW with compressed music formats end in MP3 or WMA. • Other file formats like i-Tunes or Ogg are not recognized. • WMA files may have (DRM) copy protection and cannot be read.
BAD DISC/PLEASE CHECK/OWNERS MANUAL/PUSH EJECT	• CD label jammed in the mechanism. • CD eject mechanism or motor is inoperative. • CD spindle motor won't spin up the CD.	Press the EJECT button and hold it for 5 seconds. If the CD does not eject, try again. If the CD still won't eject, replace the unit.

XM Error Codes

Error Code Displayed	Possible Cause	Solution
LOADING	XM radio is acquiring audio or program information.	Wait until the radio receives the information.
OFF AIR	XM channel not in service.	Try another XM channel.
NO SIGNAL	Loss of signal.	Both terrestrial and satellite antennas have lost signal. Park the vehicle outside with a clear view of the southern horizon.
UPDATING	XM radio is receiving information update from the network.	This message disappears once the update finishes.
CHECK ANTENNA ANTENNA ERROR	XM antenna error.	Repair open or short in the satellite antenna. Substitute the XM antenna with a known-good one, and recheck. If the error is gone, replace the original XM antenna. If the error is still present, replace the antenna lead.
— — —	No signal from XM.	Check a known-good vehicle with XM radio. If the known-good vehicle has the same symptoms, contact XM Satellite Radio at (800) 852—9696.

Audio Unit Error Codes

Error Code Displayed	Possible Cause	Solution
CODE ERROR 1	Anti-theft code mismatch (1st try).	Enter the correct anti-theft code.
CODE ERROR E	Anti-theft code mismatch (10th try).	Remove fuse No. 15 (10 A) in the under-hood fuse/relay box, then reinsert it. You will have 10 more tries to enter the correct anti-theft code.

Symptom Troubleshooting

Poor AM or FM radio reception or interference

NOTE:
- Check the vehicle battery condition first.
- Check the connectors for poor connections or loose terminals.
- Check the radio reception in an open area. Poor reception/interference can be caused by any of these conditions:
- The radio station is far away.
- Atmospheric conditions are unfavorable.
- Aftermarket window tint.
- A tall building, mountains, or high-voltage power lines are nearby.

1. Turn the ignition switch to ON (II).

2. Do the Seek Stop Test (see page 23-109).

   Is the test vehicle within 10 % of the known-good vehicle?

   YES—Multipath interference or weak station. Operation is normal.■

   NO—Go to step 3.

3. Check the reception/interference is the same in several locations.

   Is the reception/interference the same?

   YES—Go to step 4.

   NO—Multipath interference or weak station. Operation is normal.■

4. Check the reception/interference while the engine is running.

   Is there noise (static or whine) only with the engine running?

   YES—Check the antenna and radio grounds. If OK, check the charging system and the ignition system.■

   NO—Go to step 5.

5. Turn the ignition switch to LOCK (0).

6. Check the connections from the AM/FM antenna amplifier to the window antenna wire.

   Are there any loose or damaged connections?

   YES—Repair the connections, or substitute a known-good AM/FM antenna amplifier and retest. If you substitute a known-good AM/FM antenna amplifier, and the symptom/condition goes away, replace the original AM/FM antenna amplifier (see page 23-121).

   NO—Go to step 7.

7. With the help of an assistant inside the vehicle, have the assistant shine a flashlight (A) along each window antenna wire (B). Check from the outside of the vehicle for any breaks or openings in the window antenna wires.

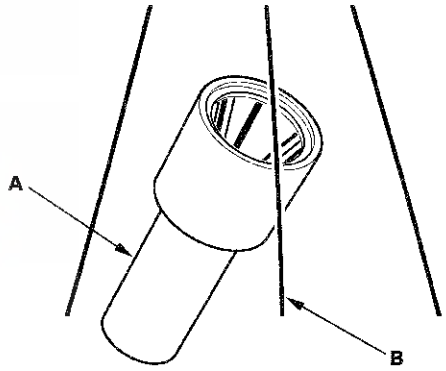

   Are there any breaks or cuts in the window antenna wire?

   YES—Repair the window antenna. Go to AM/FM antenna repair (see page 23-122), or replace the right quarter glass.■

   NO—Go to step 8.

8. Disconnect the AM/FM antenna amplifier 3P connector (see page 23-121).

9. Turn the ignition switch to ON (II).

10. Measure the voltage between the AM/FM antenna amplifier 3P connector terminal No. 3 and body ground.

AM/FM ANTENNA AMPLIFIER 3P CONNECTOR

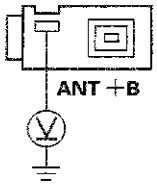

Terminal side of female terminals

Is there battery voltage?

YES—Go to step 16.

NO—Go to step 11.

11. Turn the ignition switch to LOCK (0).

12. Remove the audio unit.

- With navigation (see page 23-110)
- Without navigation (see page 23-111)

13. Disconnect audio unit connector F (3P).

14. Check for continuity between audio unit connector F (3P) terminal No. 3 and the AM/FM antenna amplifier 3P connector terminal No. 3.

AUDIO UNIT CONNECTOR F (3P)
Terminal side of female terminals

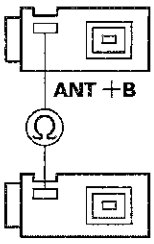

AM/FM ANTENNA AMPLIFIER 3P CONNECTOR
Terminal side of female terminals

Is there continuity?

YES—Go to step 15.

NO—Repair open in the wire between the audio unit and the AM/FM antenna amplifier. Also check the AM/FM antenna lead/sublead connector. ■

(cont'd)

Symptom Troubleshooting (cont'd)

15. Check for continuity between audio unit connector F (3P) terminal No. 3 and body ground.

AUDIO UNIT CONNECTOR F (3P)

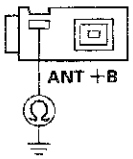

Terminal side of female terminals

Is there continuity?

YES—Repair short to body ground in the wire between the audio unit and AM/FM antenna amplifier. ■

NO—Replace the audio unit. ■

- With navigation (see page 23-110)
- Without navigation (see page 23-111)

16. Remove the audio unit.

- With navigation (see page 23-110)
- Without navigation (see page 23-111)

17. Disconnect audio unit connector F (3P).

18. Check for continuity between audio unit connector F (3P) terminal No. 1 and the AM/FM antenna amplifier 3P connector terminal No. 1.

AUDIO UNIT CONNECTOR F (3P)
Terminal side of female terminals

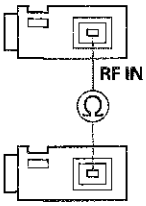

AM/FM ANTENNA AMPLIFIER 3P CONNECTOR
Terminal side of female terminals

Is there continuity?

YES—Go to step 19.

NO—Replace the AM/FM antenna lead and/or sublead. ■

19. Check for continuity between audio unit connector F (3P) terminal No. 1 and body ground.

AUDIO UNIT CONNECTOR F (3P)

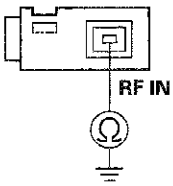

Terminal side of female terminals

Is there continuity?

YES—Replace the AM/FM antenna lead and/or sublead. ■

NO—Go to step 20.

20. Check for continuity between audio unit connector F (3P) terminal No. 2 and the AM/FM antenna amplifier 3P connector terminal No. 2.

AUDIO UNIT CONNECTOR F (3P)
Terminal side of female terminals

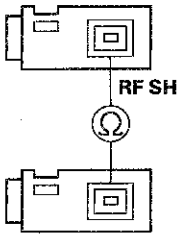

AM/FM ANTENNA AMPLIFIER 3P CONNECTOR
Terminal side of female terminals

Is there continuity?

YES—Go to step 21.

NO—Replace the AM/FM antenna lead and/or sublead. ■

21. Check for continuity between audio unit connector F (3P) terminals No. 1 and No. 2.

AUDIO UNIT CONNECTOR F (3P)

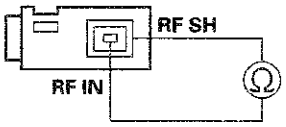

Terminal side of female terminals

Is there continuity?

YES—Replace the AM/FM antenna lead and/or sublead. ■

NO—Replace the AM/FM antenna amplifier (see page 23-121) and recheck. If the reception still poor, replace the audio unit. ■

- With navigation (see page 23-110)
- Without navigation (see page 23-111)

Audio unit power switch will not turn on (No information display and no sound)

NOTE:
- Check the vehicle battery condition first.
- Check the connectors for poor connections or loose terminals.

1. Turn the ignition switch to ON (II).

2. Push the power switch ON to see if audio unit turns ON.

   Does the audio unit display operate properly, and does the audio unit sound normal?

   YES—Intermittent failure, the system is OK at this time. ■

   NO—Go to step 3.

3. Turn the ignition switch to LOCK (0).

4. Check the No. 15 (10 A) fuse in the under-hood fuse/relay box and the No. 18 (7.5 A) fuse in the driver's under-dash fuse/relay box.

   Are the fuses OK?

   YES—Go to step 5.

   NO—Replace the fuse, and recheck. ■

5. Remove the audio unit with navigation (see page 23-110), without navigation (see page 23-111). Check that the audio unit connectors are properly connected.

   Are they connected properly?

   YES—Go to step 6.

   NO—Repair poor connections and reconnect the connectors, and recheck the function. ■

6. Disconnect audio unit connector A (24P).

   NOTE: Eject all the CDs before disconnecting the audio unit and CD changer to prevent damaging the CD player's load mechanism.

7. Turn the ignition switch to ON (II).

(cont'd)

Symptom Troubleshooting (cont'd)

8. Measure the voltage between body ground and audio unit connector A (24P) terminals No. 14 and No. 24 individually.

AUDIO UNIT CONNECTOR A (24P)

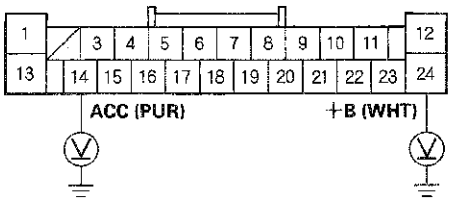

Wire side of female terminals

Is there battery voltage?

YES—Go to step 9.

NO—Repair open in the wire(s) between the No. 15 (10 A) fuse in the under-hood fuse/relay box, the No. 18 (7.5 A) fuse in the driver's under-dash fuse/relay box and the audio unit. ■

9. Reconnect audio unit connector A (24P).

10. Measure the voltage between audio unit connector A (24P) terminal No. 12 and body ground.

AUDIO UNIT CONNECTOR A (24P)

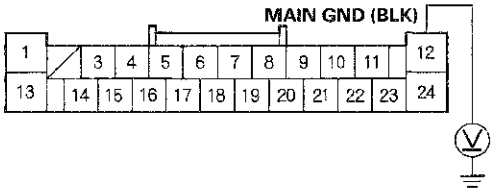

Wire side of female terminals

Is there less than 0.1 V?

YES—Replace the audio unit. ■

- With navigation (see page 23-110)
- Without navigation (see page 23-111)

NO—Repair open in the wire between the audio unit connector A (24P) terminal No. 12 and body ground (G402) (see page 22-40). ■

Audio unit power switch will not turn off

NOTE:
- Check the vehicle battery condition first.
- Check the connectors for poor connections or loose terminals.
- Check for aftermarket accessories plugged info the vehicle's accessory power sockets.

1. Turn the ignition switch to ON (II).

2. Push the power switch off or turn the ignition switch to LOCK (0) to see if the audio unit turns off.

   Does the audio unit turn off?
   YES—Go to step 3.
   NO—Replace the audio unit. ■
   - With navigation (see page 23-110)
   - Without navigation (see page 23-111)

3. Turn the ignition switch to ON (II), push the power switch on, then turn the ignition switch to LOCK (0).

   Does the audio unit turn off?
   YES—Operation is normal. ■
   NO—Go to step 4.

4. Remove the audio unit with navigation (see page 23-110), without navigation (see page 23-111). Disconnect audio unit connector A (24P).

   NOTE: Eject all the CDs before disconnecting the audio unit and CD changer to prevent damaging the CD player's load mechanism.

5. Measure the voltage between audio unit connector A (24P) terminal No. 14 and body ground.

AUDIO UNIT CONNECTOR A (24P)

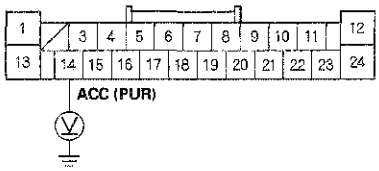

Wire side of female terminals

Is there battery voltage?
YES—Check for short to power on the PUR wire. ■
NO—Replace the audio unit. ■
- With navigation (see page 23-110)
- Without navigation (see page 23-111)

No sound is heard from the speaker(s) (display is normal) (with premium audio)

NOTE:
- Check the vehicle battery condition first.
- Check the connectors for poor connections or loose terminals.
- Set the fader and balance positions to the center.
- Before doing the troubleshooting, do the Audio unit power switch will not turn on troubleshooting (see page 23-61).

1. Turn the ignition switch to ON (II).

2. Turn on the audio unit, and make sure the volume button is not set to the MIN level.

   Is it at the MIN level?

   YES—Raise the volume level, and recheck the function. ■

   NO—Go to step 3.

3. On the steering wheel, check the navigation talk command, and/or the HandsFreeLink talk command function.

   Are the navigation talk command and/or the HFL talk command function set?

   YES—Cancel the navigation talk command by pressing the navigation BACK button, and/or the HFL talk command, press the HFL BACK button, then recheck the function. ■

   NO—Go to step 4.

4. Do the speaker check mode with the self-diagnostic function (see page 23-50).

   Do all speakers produce a tone?

   YES—System is OK at this time. Check for poor connections at the audio unit, speakers and stereo amplifier. ■

   NO—Go to step 5.

5. Turn the ignition switch to LOCK (0).

6. Check the speaker(s) with no sound for any damage.

   Is there any damage?

   YES—Replace the speaker (see page 23-118), and recheck. ■

   NO—Go to step 7.

7. Remove the speaker(s) with no sound (see page 23-118), and disconnect its connector.

8. Check the speaker 2P connector for a loose or poor connection.

   Reconnect the speaker connector, and recheck the symptom; is the condition still present?

   YES—Go to step 9.

   NO—Intermittent failure. Operation is normal. ■

(cont'd)

Symptom Troubleshooting (cont'd)

9. Test the speaker(s) (see page 23-118).

   Is the speaker OK?

   YES—Go to step 10.

   NO—Replace the speaker(s). ■

10. Disconnect stereo amplifier connector B (18P) and the speaker connector.

11. Check for continuity between body ground and stereo amplifier connector B (18P) according to the table. Then check for continuity between both pairs of speaker wires (+) and (−) at the door speaker network control unit connector (8P).

Speaker	Stereo amplifier terminal	Wire color
Driver's door speaker, Left tweeter	B16 (+)	GRN
	B7 (−)	PUR
Front passenger's door speaker, Right tweeter	B15 (+)	PNK
	B6 (−)	WHT
Right rear speaker	B12 (+)	BLU
	B3 (−)	ORN
Subwoofer	B10 (+)	GRY
	B1 (−)	LT BLU
Left rear speaker	B13 (+)	YEL
	B4 (−)	BRN

Speaker	Driver's door speaker network control unit terminal	Front passenger's door speaker network control unit terminal	Wire color
Driver's door speaker	7 (+)	——	LT GRN
	8 (−)		PNK
Driver's door tweeter	5 (+)	——	RED
	6 (−)		GRN
Front passenger's door speaker	——	7 (+)	GRY
		8 (−)	RED
Front passenger's door tweeter	——	5 (+)	BRN
		6 (−)	WHT

STEREO AMPLIFIER CONNECTOR B (18P)

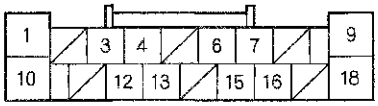

Wire side of female terminals

SPEAKER NETWORK CONTROL UNIT CONNECTOR (8P)

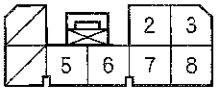

Wire side of female terminals

Is there continuity?

YES—Repair short in the wire(s) between the stereo amplifier and the door speaker network control unit or speaker(s) or short between the (+) and (−) speaker wires. ■

NO—Go to step 12.

12. Connect the speaker connector terminal (+) and (−) with a jumper wire.

13. Check for continuity between stereo amplifier connector B (18P) according to the table.

Speaker	Stereo amplifier terminal	Wire color
Driver's door speaker, Left tweeter	B16 (+)	GRN
	B7 (−)	PUR
Front passenger's door speaker, Right tweeter	B15 (+)	PNK
	B6 (−)	WHT
Right rear speaker	B12 (+)	BLU
	B3 (−)	ORN
Subwoofer	B10 (+)	GRY
	B1 (−)	LT BLU
Left rear speaker	B13 (+)	YEL
	B4 (−)	BRN

STEREO AMPLIFIER CONNECTOR B (18P)

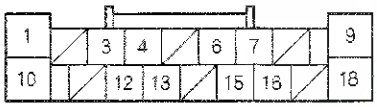

Wire side of female terminals

Is there continuity?

YES—Go to step 14.

NO—Repair open in the wire between the stereo amplifier and the speaker or door speaker network control unit. ■

14. Disconnect the jumper wire.

15. Measure the voltage between stereo amplifier connector B (18P) terminal No. 18 and body ground.

STEREO AMPLIFIER CONNECTOR B (18P)

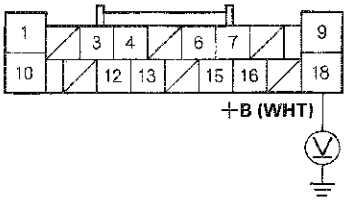

Wire side of female terminals

Is there battery voltage?

YES—Go to step 16.

NO—Repair open in the wire between No. 15 (20 A) fuse in the passenger's under-dash fuse/relay box and stereo amplifier connector B (18P) terminal No. 18 . ■

(cont'd)

Symptom Troubleshooting (cont'd)

16. Disconnect stereo amplifier connector A (24P).

17. Turn the ignition switch to ON (II).

18. Measure the voltage between stereo amplifier connector A (24P) terminal No. 24 and body ground.

STEREO AMPLIFIER CONNECTOR A (24P)

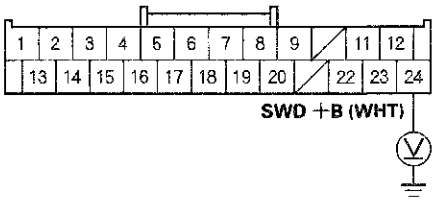

Wire side of female terminals

Is there battery voltage?

YES—Go to step 19.

NO—Repair open in the wire between stereo amplifier connector A (24P) terminal No. 24 and audio unit connector A (24P) terminal No. 17.■

19. Turn the ignition switch to LOCK (0).

20. Reconnect stereo amplifier connector A (24P).

21. Turn the ignition switch to ON (II).

22. Measure the voltage between stereo amplifier connector A (24P) terminal No. 1 and body ground, and between connector B (18P) terminal No. 9 and body ground.

STEREO AMPLIFIER CONNECTOR A (24P)

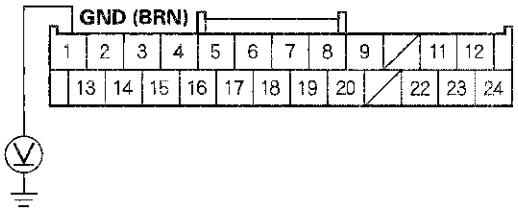

Wire side of female terminals

STEREO AMPLIFIER CONNECTOR B (18P)

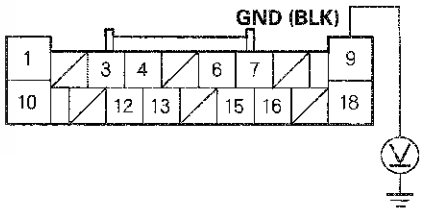

Wire side of female terminals

Is there less than 0.1 V?

YES—Go to step 23.

NO—Repair short to body ground in the wire between stereo amplifier connector A (24P) terminal No. 1, connector B (18P) terminal No. 9 and body ground (G401, G402) (see page 22-42).■

23. Disconnect audio unit connector A (24P), stereo amplifier connector A (24P), and audio unit connector D (8P).

    NOTE: Eject all the CDs before disconnecting the audio unit and CD changer to prevent damaging the CD player's load mechanism.

24. Check for continuity between audio unit connector A (24P), connector D (8P) and stereo amplifier connector A (24P) according to the table.

Audio unit connector	Stereo amplifier connector	Wire color
A6	A7	RED
A7	A19	GRN
A8	A18	GRY
A9	A15	GRY
A10	A4	RED
A11	A16	GRN
A18	A5	RED
A19	A17	GRN
A20	A6	GRY
A21	A3	GRY
A22	A2	RED
A23	A14	GRN
D6	A8	RED
D7	A9	BLK
D8	A20	GRN

AUDIO UNIT CONNECTOR A (24P)

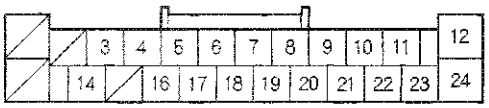

Wire side of female terminals

AUDIO UNIT CONNECTOR D (8P)

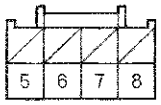

Wire side of female terminals

STEREO AMPLIFIER CONNECTOR A (24P)

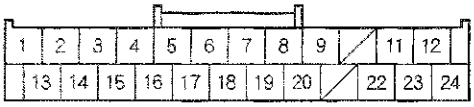

Wire side of female terminals

Is there continuity?

YES—Go to step 25.

NO—Repair open in the applicable wire(s) between the audio unit and stereo amplifier (replace the affected shielded harness).■

25. Check for continuity between stereo amplifier connector A (24P) and body ground according to the table.

Stereo amplifier connector	Wire color
A2	RED
A4	RED
A5	RED
A7	RED
A8	RED
A14	GRN
A16	GRN
A17	GRN
A19	GRN
A20	GRN

STEREO AMPLIFIER CONNECTOR A (24P)

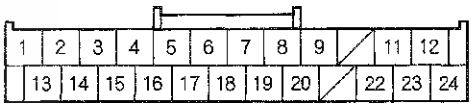

Wire side of female terminals

Is there continuity?

YES—Repair short to body ground in the wire(s) between the audio unit and stereo amplifier (replace the affected shielded harness).■

NO—Go to step 26.

(cont'd)

Symptom Troubleshooting (cont'd)

26. Check for continuity between the terminals of stereo amplifier connector A (24P) according to the table.

From terminal		To terminals	
Stereo amplifier connector	Audio unit connector	Stereo amplifier connector	Audio unit connector
A3 (GRY)	A21 (GRY)	A2 (RED)	A22 (RED)
		A14 (GRN)	A23 (GRN)
A6 (GRN)	A20 (GRY)	A5 (RED)	A18 (RED)
		A17 (GRN)	A19 (GRN)
A15 (GRY)	A9 (GRY)	A4 (RED)	A10 (RED)
		A16 (GRN)	A11 (GRN)
A18 (GRY)	A8 (GRY)	A7 (RED)	A6 (RED)
		A19 (GRN)	A7 (GRN)
A9 (BLK)	A7 (BLK)	A8 (RED)	A6 (RED)
		A20 (GRN)	A8 (GRN)

STEREO AMPLIFIER CONNECTOR A (24P)

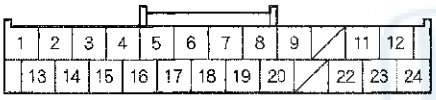

Wire side of female terminals

AUDIO UNIT CONNECTOR D (8P)

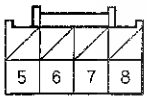

Wire side of female terminals

AUDIO UNIT CONNECTOR A (24P)

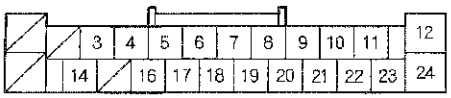

Wire side of female terminals

Is there continuity between any of the terminals?

YES—Repair short in the wire(s) between the audio unit and stereo amplifier (replace the affected shielded harness).■

NO—Substitute a known-good audio unit with navigation (see page 23-110), without navigation (see page 23-111), and recheck. If the symptom/indication goes away, replace the original audio unit with navigation (see page 23-110), without navigation (see page 23-111). If the symptom is still present, substitute a known-good stereo amplifier, and recheck. If the symptom/indication goes away, replace the original stereo amplifier (see page 23-115).■

No Sound is heard from the speaker(s) (display is normal) (without premium audio)

NOTE:
- Check the vehicle battery condition.
- Check the connectors for poor connections or loose terminals.
- Set the fader and balance positions to the center.
- Before doing symptom troubleshooting, do the audio unit power switch will not turn on troubleshooting (see page 23-61).

1. Turn the ignition switch to ON (II).

2. Turn on the audio unit and make sure the volume button is not set to the MIN level.

   Is it at the MIN level?

   YES—Raise the volume level, and recheck the function.■

   NO—Go to step 3.

3. Go to the speaker check mode in the audio system self-diagnostic function (see page 23-50).

   Do all speakers produce a tone?

   YES—Intermittent failure; the system is OK at this time. Check for poor connections at the audio unit and speakers.

   NO—Go to step 4.

4. Turn the ignition switch to LOCK (0).

5. Check the speaker(s) with no sound for any damage.

   Is there any damage?

   YES—Substitute the speaker (see page 23-118) and recheck.■

   NO—Go to step 6.

6. Remove the speaker(s) with no sound (see page 23-118), and disconnect its connector.

7. Check the speaker 2P connector for a loose or poor connection.

   Reconnect the speaker 2P connector and recheck the symptom; is the problem still present?

   YES—Go to step 8.

   NO—Operation is normal. ■

8. Measure the resistance between the terminals No. 1 and No. 2 of the speaker.

   NOTE: If the problem is in the front door speakers, measure the resistance of the door speaker and the door tweeter.

SPEAKER 2P CONNECTOR

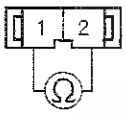

Wire side of female terminals

TWEETER 2P CONNECTOR

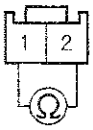

Wire side of female terminals

Is there about 4 Ω ?

YES—Go to step 9.

NO—Replace the faulty speaker(s). ■

9. Remove the audio unit with navigation (see page 23-110), without navigation (see page 23-111). Disconnect audio unit connector A (24P).

   NOTE: Eject all the CDs before removing the audio unit and CD changer to prevent damaging the CD player's load mechanism.

10. Check for continuity between the following terminals of audio unit connector A (24P) according to the table.

Speaker	Terminal	Wire color
Driver's door speaker, Left tweeter	A23 (+)	LT GRN
	A22 (−)	PNK
Front passenger's door speaker, Right tweeter	A19 (+)	GRY
	A18 (−)	RED
Left rear speaker	A11 (+)	YEL
	A10 (−)	BRN
Right rear speaker	A7 (+)	BLU
	A6 (−)	ORN

AUDIO UNIT CONNECTOR A (24P)

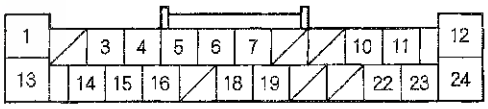

Wire side of female terminals

Is there continuity?

YES—Go to step 11.

NO—Repair open in the wires between the audio unit and speaker(s). ■

(cont'd)

Symptom Troubleshooting (cont'd)

11. Disconnect the speaker 2P connector.

12. Check for continuity between audio unit connector A (24P) and body ground according to the table.

Audio unit connector	Wire color
A6	ORN
A7	BLU
A10	BRN
A11	YEL
A18	RED
A19	GRY
A22	PNK
A23	LT GRN

AUDIO UNIT CONNECTOR A (24P)

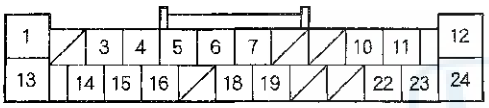

Wire side of female terminals

Is there continuity?

YES—Repair short to body ground in the wire(s) between the audio unit and the speaker(s). ■

NO—Substitute a known-good audio unit with navigation (see page 23-110), without navigation (see page 23-111), and recheck. If the symptom/indication goes away, replace the original audio unit with navigation (see page 23-110), without navigation (see page 23-111). ■

Auxiliary input sound is low or cannot be heard

NOTE:
- Check the vehicle battery condition first.
- Check the connectors for poor connections or loose terminals.
- Use auxiliary stereo cables with 3.5 mmends only.
- Auxiliary accessories may be played on the audio unit using the auxiliary input.

1. Turn the ignition switch to ON (II).

2. Turn the audio unit on, and connect an auxiliary accessory to the auxiliary input jack.

3. Check the volume operation.

   Is the sound normal?
   YES—Operation is normal at this time. ■
   NO—Go to step 4.

4. Make sure auxiliary accessory volume is set to high.

   Is the volume set to high?
   YES—Go to step 5.
   NO—Raise the auxiliary accessory volume is set to high. Make sure the audio unit volume is turned down before retesting. ■

5. Substitute a known-good auxiliary audio accessory and/or auxiliary stereo cable, and recheck.

   Does the auxiliary audio accessory operate properly?
   YES—Original auxiliary audio accessory or auxiliary stereo cable is faulty. ■
   NO—Go to step 6.

6. Turn the ignition switch to LOCK (0).

7. Remove the auxiliary jack assembly (see page 23-123) and check that the auxiliary jack assembly is properly connected.

   Is the auxiliary jack assembly connected properly?
   YES—Go tostep 8.
   NO—Reconnect the connector, and recheck the function. ■

8. Disconnect the auxiliary jack assembly 5P connector.

9. Disconnect audio unit connector B (20P).

10. Check for continuity between body ground and audio unit connector B (20P) according to the table.

Audio unit connector	Wire color
B3	BLK
B13	RED
B14	WHT
B15	GRY

AUDIO UNIT CONNECTOR B (20P)

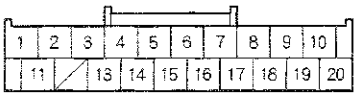

Wire side of female terminals

Is there continuity?
YES—Short to body ground in the wire(s) between the audio unit and the auxiliary jack assembly. Replace the affected shielded harness.■
NO—Go to step 11.

11. Check for continuity between audio unit connector B (20P) according to the table.

From terminal	To terminals
B3 (BLK)	B4 (GRY), B13 (RED), B14 (WHT)
B4 (GRY)	B13 (RED), B14 (WHT)
B13 (RED)	B14 (WHT)

AUDIO UNIT CONNECTOR B (20P)

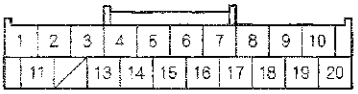

Wire side of female terminals

Is there continuity?
YES—Short in the wire(s) between the audio unit and the auxiliary jack assembly. Replace the affected shielded harness.■
NO—Go to step 12.

12. Check for continuity between audio unit connector B (20P) and auxiliary jack assembly 5P connector according to the table.

Audio unit connector	Auxiliary jack assembly connector	Wire color
B3	3	BLK
B5	2	YEL
B13	4	RED
B14	5	WHT
B15	1	GRY

AUDIO UNIT CONNECTOR B (20P)

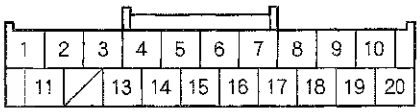

Wire side of female terminals

AUXILIARY JACK ASSEMBLY 5P CONNECTOR

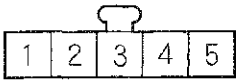

Wire side of female terminals

Is there continuity?

YES—Substitute a known-good auxiliary jack assembly and recheck. If the symptom/indication goes away, replace the original auxiliary jack assembly. If the symptom/indication is still present, replace the audio unit with navigation (see page 23-110), without navigation (see page 23-111).■

NO—Open in the wire(s) between the audio unit and the auxiliary jack assembly. Replace the affected shielded harness.■

Symptom Troubleshooting (cont'd)

Audio system sound is weak or distorted (display is normal)

NOTE:
- Check the vehicle battery condition first.
- Check the connectors for poor connections or loose terminals.

1. Turn the ignition switch to ON (II).

2. Turn on the audio unit, and check for sound in each mode (AM, FM, XM, and CD).

   Is there sound from the speakers, and is the sound quality normal in each mode?

   YES—Intermittent failure. The system is OK at this time. Check for loose connections at the audio unit, the amplifier, and each speaker. ■

   NO—Speakers all work, sound quality is poor. ■

   - If sound quality is poor only with the XM radio, or the XM radio does not function, go to poor or no sound with XM radio (see page 23-103).
   - If the sound quality is poor only with AM or FM, go to poor AM or FM radio reception or interference (see page 23-58).
   - If the sound is poor in all modes, go to sound quality diagnosis (see page 23-105).

Radio preset memory is lost

NOTE: If only XM stations are lost, go to XM radio preset memory is lost (see page 23-102).

1. Turn the ignition switch to ON (II).

2. Turn on the audio unit and set each of the radio station preset buttons.

   Do each of the buttons set properly?

   YES—Go to step 3.

   NO—Replace the audio unit. ■

   - With navigation (see page 23-110)
   - Without navigation (see page 23-111)

3. Turn the ignition switch to LOCK (0) for 1 minute, then turn it back to ON (II).

4. Test the preset buttons for proper recall operation.

   Do the preset buttons recall the set radio stations?

   YES—System is normal at this time. Check connections at the audio unit. ■

   NO—Substitute a known-good audio unit with navigation (see page 23-110), without navigation (see page 23-111), and recheck. If the symptom/indication goes away, replace the original audio unit with navigation (see page 23-110), without navigation (see page 23-111). ■

Volume does not change

NOTE:
- Check the vehicle battery condition first.
- Check the connectors for poor connections or loose terminals.
- Set the fader and balance positions to the center.

1. Turn the ignition switch to ON (II).

2. Turn on the audio unit, and check for sound in each mode (AM, FM, XM, and CD).

   Is the sound normal?

   YES—Go to step 3.

   NO—Go to Sound Quality Diagnosis (see page 23-105) or no sound is heard from speaker(s) with premium audio system (see page 23-63), without premium audio system (see page 23-68). ■

3. Operate the volume knob to see if the volume changes.

   Does the volume change?

   YES—Operation is normal. ■

   NO—Substitute a known-good audio unit with navigation (see page 23-110), without navigation (see page 23-111), and recheck. If the symptom/indication goes away, replace the audio unit with navigation (see page 23-110), without navigation (see page 23-111). ■

Volume does not increase with speed

NOTE:
- Check the vehicle battery condition first.
- Check the connectors for poor connections or loose terminals.

1. Test-drive the vehicle at highway speeds, and monitor if the volume increases.

   Does the volume increase?

   YES—Intermittent failure, the system is OK at this time. ■

   NO—Go to step 2.

2. Verify SVC mode setting in audio unit sound adjustment set-up.

   Is the SVC set to off?

   YES—Change setting to MID, and retest. ■

   NO—Go to step 3.

3. Do the self-diagnostic function for the vehicle speed pulse indication (see page 23-46).

   Does self-diagnostic function indicate a VSP signal?

   YES—Substitute a known-good audio unit with navigation (see page 23-110), without navigation (see page 23-111), and retest. If the symptom/indication goes away, replace the original audio unit with navigation (see page 23-110), without navigation (see page 23-111). ■

   NO—
   - 1 CD type: Go to step 4.
   - Except 1 CD type: Check for B-CAN DTCs (communication BUS Line Error) with the HDS and go to the indicated DTC's troubleshooting. If no B-CAN DTCs or communication bus line errors are found, substitute a known-good audio unit with navigation (see page 23-110), without navigation (see page 23-111), and recheck. If the symptom goes away, replace the original audio unit with navigation (see page 23-110), without navigation (see page 23-111). ■

(cont'd)

Symptom Troubleshooting (cont'd)

4. Remove the audio unit with navigation (see page 23-110), without navigation (see page 23-111), and disconnect audio unit connector A (24P).

   NOTE: Eject all the CDs before removing the audio unit and CD changer to prevent damaging the CD player's load mechanism.

5. Turn the ignition switch to ON (II).

6. Test-drive the vehicle and have an assistant measure the voltage at audio unit connector A (24P) terminal No. 15.

   NOTE: Some volt meters may show an average of 2.5 V, and others may show a constant voltage, depending on the meter's measurement speed.

AUDIO UNIT CONNECTOR A (24P)

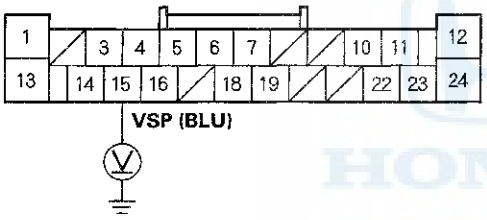

Wire side of female terminals

Is there a 0–5 V pulse?

YES—Substitute a known-good audio unit with navigation (see page 23-110), without navigation (see page 23-111), and recheck. If the symptom/indication goes away, replace the audio unit with navigation (see page 23-110), without navigation (see page 23-111).■

NO—Repair opens or shorts in the wire between the audio unit connector A (24P) terminal No. 15 and the ECM/PCM connector A (49P) terminal No. 30. If no opens are found, substitute a known-good ECM/PCM (see page 11-7), and recheck. If the symptom/indicated goes away, replace the original ECM/PCM (see page 11-216).■

Volume is too high or too low when driving at freeway speeds

NOTE:
- Check the vehicle battery condition first.
- Check the connectors for poor connections or loose terminals.

1. Test-drive the vehicle at highway speeds, and monitor volume level.

   Is the volume level too high, or too low?

   YES—Go to step 2.

   NO—Intermittent failure, the system is OK at this time.■

2. Change SVC mode setting in sound adjustment set-up to Mid and retest.

   Is the volume level still too high or too low?

   YES—Substitute a known-good audio unit with navigation (see page 23-110), without navigation (see page 23-111), and recheck. If the symptom/indication goes away, replace the audio unit with navigation (see page 23-110), without navigation (see page 23-111).■

   NO—Improper SVC setting for customer's sound taste.■

Radio tuner does not change stations

NOTE:
- Check the vehicle battery condition first.
- Check the connectors for poor connections or loose terminals.

1. Turn the ignition switch to ON (II).

2. Turn on the audio unit, and note the audio information on the display panel.

   Does the audio information display properly?

   YES—Go to step 3.
   NO—Go to Audio system information does not display on the audio-HVAC (sub) display unit (see page 23-75).■

3. Operate the tuning knob to see if the radio station changes.

   Does the radio station change?

   YES—Intermittent failure, the tuning knob is OK at this time.■
   NO—Go to step 4.

4. Go to the audio button, knob, and remote switch detection mode in the audio system self-diagnostic function (see page 23-46).

   Is the rotating portion of the selector knob (tune (sound) knob ICD) detected when operated in both directions?

   YES—Substitute a known-good audio unit with navigation (see page 23-110), without navigation (see page 23-111), and recheck. If the symptom/indication goes away, replace the original audio unit with navigation (see page 23-110), without navigation (see page 23-111).■
   NO—Substitute a known-good audio switch panel, and recheck. If the symptom/indication goes away, replace the original audio switch panel (see page 23-112). If the system is still present, substitute a known-good audio unit with navigation (see page 23-110), without navigation (see page 23-111) and recheck. If the symptom/indication goes away, replace the original audio unit with navigation (see page 23-110), without navigation (see page 23-111).■

Audio system information does not display on the audio-HVAC (sub) display unit

NOTE:
- Check the vehicle battery condition first.
- Check the connectors for poor connections or loose terminals.

1. Remove the audio-HVAC display unit (see page 23-114).

2. Check the connections at the audio-HVAC (sub) display unit 12P connector and audio unit connector B (20P).

   Are the connectors and terminals connected properly?

   YES—Go to step 3.

   NO—Repair the connection and recheck.■

3. Turn the ignition switch to ON (II).

4. Measure the voltage between audio-HVAC (sub) display unit 12P connector terminal No. 6 and body ground.

AUDIO-HVAC (SUB) DISPLAY UNIT 12P CONNECTOR

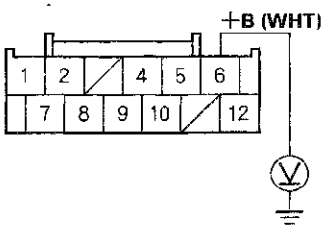

Wire side of female terminals

Is there battery voltage?

YES—Go to step 5.

NO—Repair open in the wire between the No. 15 (10 A) fuse in the under-hood fuse/relay box and audio-HVAC (sub) display unit 12P connector terminal No. 6.■

(cont'd)

Symptom Troubleshooting (cont'd)

5. Measure the voltage between the audio-HVAC (sub) display unit 12P connector terminal No. 9 and body ground.

AUDIO-HVAC (SUB) DISPLAY UNIT 12P CONNECTOR

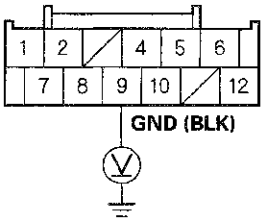

Wire side of female terminals

Is there less than 0.1 V?

YES—Go to step 6.

NO—Repair open in the wire between audio-HVAC (sub) display 12P connector terminal No. 9 and body ground (G401). ■

6. Turn the ignition switch to LOCK (0).

7. Disconnect audio unit connector B (20P) and the audio-HVAC (sub) display unit 12P connector.

8. Check for continuity between audio unit connector B (20P) and the audio-HVAC display unit 12P connector according to the table.

Audio unit connector	Audio-HVAC display unit connector	Wire color
B6	2	RED
B7 [B12]	1	GRN
B17 [B11]	4	BLU

[ ] : 1 CD type

Except 1 CD type

AUDIO UNIT CONNECTOR B (20P)

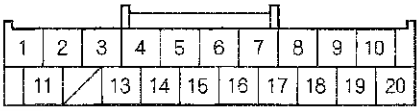

Wire side of female terminals

1 CD type

AUDIO UNIT CONNECTOR B (12P)

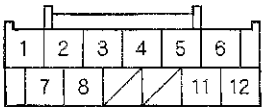

Wire side of female terminals

AUDIO-HVAC (SUB) DISPLAY UNIT 12P CONNECTOR

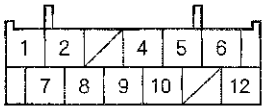

Wire side of female terminals

Is there continuity?

YES—Go to step 9.

NO—Repair open in the wire(s) between the audio unit and audio-HVAC (sub) display unit (replace the affected shielded harness). ■

9. Check for continuity between the terminals of the audio-HVAC (sub) display unit 12P connector and body ground according to the table.

Audio-HVAC (sub) display unit connector	Wire color
1	GRN
2	RED
4	BLU

AUDIO-HVAC (SUB) DISPLAY UNIT 12P CONNECTOR

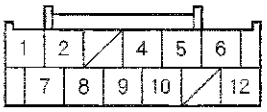

Wire side of female terminals

Is there continuity?

YES—Repair short to body ground in the wire(s) between the audio unit and audio-HVAC (sub) display unit (replace the affected shielded harness).■

NO—Go to step 10.

10. Check for continuity between the terminals of audio unit connector B (20P) according to the table.

From terminal	To terminals
B16 [B5] (BLK)	B7 [B12] (GRN), B6 (RED)

[ ] : 1 CD type

Except 1 CD type

AUDIO UNIT CONNECTOR B (20P)

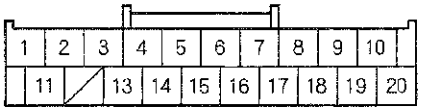

Wire side of female terminals

1 CD type

AUDIO UNIT CONNECTOR B (12P)

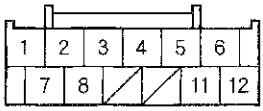

Wire side of female terminals

Is there continuity between any of the terminals?

YES—Repair short in the wire(s) between the audio unit and audio-HVAC (sub) display unit (replace the affected shielded harness).■

NO—Substitute a known-good audio-HVAC (sub) display unit (see page 23-114), and recheck. If the symptom/indication goes away, replace the original audio-HVAC (sub) display unit (see page 23-114). If the symptom is still present, substitute a known-good audio unit with navigation (see page 23-110), without navigation (see page 23-111) and recheck. If the symptom/indication goes away, replace the original audio unit with navigation (see page 23-110), without navigation (see page 23-111).■

Symptom Troubleshooting (cont'd)

Security indicator does not work properly

NOTE:
- The system will not operate without the 5-digit security (anti-theft) code.
- Before troubleshooting, confirm that a 5-digit security (anti-theft) code is recorded.

1. Turn off the audio system.

   Is the security indicator (LED) on (blink)?

   YES—Go to Step 2.

   NO—Substitute a known-good audio unit with navigation (see page 23-110), without navigation (see page 23-111), and recheck. If the symptom/indication goes away, replace the original audio unit with navigation (see page 23-110), without navigation (see page 23-111). If the symptom is still present, substitute a known-good audio switch panel (see page 23-112) and recheck. If the symptom/indicated goes away, replace the original audio switch panel (see page 23-112).■

2. Turn on the audio system.

   Is the security indicator (LED) out?

   YES—The audio unit is OK at this time. Check for loose or poor connections at the audio unit and the audio panel.■

   NO—Substitute a known-good audio unit with navigation (see page 23-110), without navigation (see page 23-111), and recheck. If the symptom/indicated goes away, replace the original audio unit with navigation (see page 23-110), without navigation (see page 23-111). If the symptom is still present, substitute a known-good audio switch panel (see page 23-112), and recheck. If the symptom/indicated goes away, replace the original audio switch panel (see page 23-112).■

Audio unit button illumination does not work (1 CD type)

NOTE:
- Check the vehicle battery condition first.
- Check the connectors for poor connections or loose terminals.

1. Turn the ignition switch to ON (II).

2. Turn the combination lighting switch to the parking light position.

3. Check the illumination of the audio unit buttons.
   Are the buttons illuminated?

   YES—Intermittent problem; the audio unit is OK at this time. Check for loose or poor connections at audio unit connector A (24P).■

   NO—Go to step 4.

4. Check the illumination of several other buttons not related to the audio system.

   Are the buttons illuminated?

   YES—Go to step 5.

   NO—Troubleshoot the interior lights. Start by checking the No. 6 (7.5 A) fuse in the passenger's under-dash fuse/relay box. If the fuse is OK, check for an open in the wire between the passenger's under-dash fuse/relay box and audio unit.■

5. Turn the ignition switch to LOCK (0).

6. Disconnect audio unit connector A (24P).

   NOTE: Eject all the CDs before removing the audio unit and CD changer to prevent damaging the CD player's load mechanism.

7. Disconnect the gauge control module 32P connector (see page 22-324).

8. Check for continuity between audio unit connector A (24P) terminal No. 1 and gauge control module 32P connector terminal No. 1.

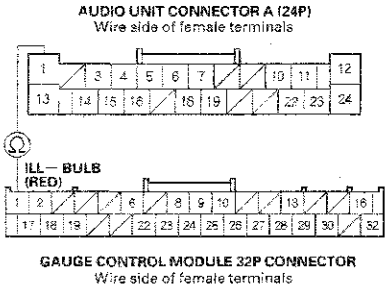

Is there continuity?

YES—Go to step 9.
NO—Repair open in the wire between the gauge control module and the audio unit. ■

9. Turn the ignition switch to ON (II).

10. With the headlight switch still on, measure the voltage between audio unit connector A (24P) terminal No. 13 and body ground.

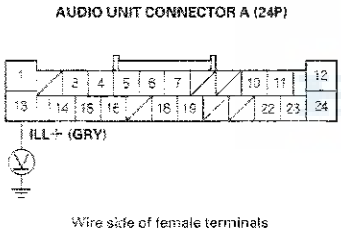

Is there battery voltage?

YES—Check the connections at the audio unit connector A (24P). If all connections are OK, substitute a known-good audio unit with navigation (see page 23-110), without navigation (see page 23-111), and recheck. If the symptom/indication goes away, replace the original audio unit with navigation (see page 23-110), without navigation (see page 23-111). If the symptom is still present, substitute a known-good audio switch panel (see page 23-112), and recheck. If the symptom/indication goes away, replace the original audio switch panel (see page 23-112). ■
NO—Repair open in the wire between the passenger's under-dash fuse/relay box and the audio unit. ■

Audio unit button illumination does not work (Except 1 CD type)

NOTE:
- Check the vehicle battery condition first.
- Check the connectors for poor connections or loose terminals.

1. Turn the ignition switch to ON (II).

2. Turn the combination lighting switch to the parking light position.

3. Check the illumination of the audio unit buttons.

Are the buttons illuminated?

YES—Intermittent problem; the audio unit is OK at this time. ■

NO—Go to step 4.

4. Check the illumination of several other buttons not related to the audio system.

Are the buttons illuminated?

YES—Check for B-CAN DTCs (communication BUS Line Error) with the HDS and go to the indicated DTS's troubleshooting. If no DTCs or communication bus line errors are found, substitute a known-good audio unit with navigation (see page 23-110), without navigation (see page 23-111), and recheck. If the symptom/indication goes away, replace the original audio unit with navigation (see page 23-110), without navigation (see page 23-111). ■

NO—Troubleshoot the interior lights. Start by checking the No. 6 (7.5 A) fuse in the passenger's under-dash fuse/relay box. If the fuse is OK, check for an open in the wire between the passenger's under-dash fuse/relay box and the audio unit. ■

Symptom Troubleshooting (cont'd)

Audio remote switch does not work properly

NOTE:
- Check the vehicle battery condition first.
- Check the connectors for poor connections or loose terminals.

1. Turn the ignition switch to ON (II).

2. Turn on the audio unit and check the audio unit operation (volume up, volume down, CH (UP), CH (DOWN), MODE).

   Is the audio unit operation OK?

   YES—Operation is normal.■

   NO—Go to step 3.

3. Go to the audio button, knob, and remote switch detection mode in the audio system self-diagnostic function (see page 23-46).

   Are the remote switch functions detected and functioning properly?

   YES—Substitute a known-good audio unit with navigation (see page 23-110), without navigation (see page 23-111), and check. If the symptom/indication goes away, replace the original audio unit with navigation (see page 23-110), without navigation (see page 23-111).■

   NO—Go to step 4.

4. Test the audio remote switch (see page 23-121).

   Is the audio remote switch OK?

   YES—Go to step 5.

   NO—Replace the audio remote switch (see page 17-25).■

5. Turn the ignition switch to LOCK (0).

6. Remove the audio unit.

   - With navigation (see page 23-110)
   - Without navigation (see page 23-111)

7. Disconnect audio unit connector A (24P).

8. Reconnect the audio remote switch, and measure the resistance between the audio unit connector A (24P) terminals No. 5 and No. 16 as specified in the table.

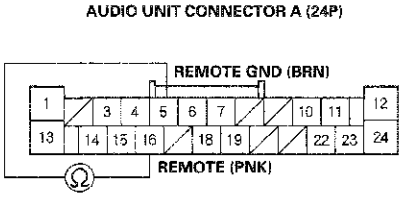

Wire side of female terminals

AUDIO REMOTE SWITCH TABLE

Button held down	VOL DOWN	VOL UP	CH (−)	CH (+)	MODE	(No button pressed)
Resistance	about 100 Ω	about 357 Ω	about 775 Ω	about 1.7 kΩ	about 3.7 kΩ	about 10 kΩ

Is the resistance OK?

YES—Go to step 9.
NO—Repair short or high resistance in the circuit between the audio unit and the audio remote switch. If the wires are OK, replace the cable reel (see page 24-218).■

9. Check for continuity between body ground and audio unit connector A (24P) terminals No. 5 and No. 16 individually.

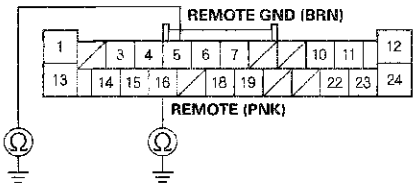

Wire side of female terminals

Is there continuity?

YES—Repair short to body ground in the circuit between the audio unit and the audio remote switch. If the wires are OK, replace the cable reel (see page 24-218).■
NO—Replace the audio unit.■
- With navigation (see page 23-110)
- Without navigation (see page 23-111)

Audio disc does not load

NOTE:
- Check the vehicle battery condition first.
- Check the connectors for poor connections or loose terminals.
- Disc labels should not be used in the audio unit. They may damage the player mechanism.
- Make sure the audio disc is compatible with the system (see the owner's manual for more information).

1. Turn the ignition switch to ON (II).

2. Turn on the audio unit and insert a known-good disc to see if the symptom can be duplicated.

   Does the disc load?

   YES—Operation is normal. If the disc loads normally, but will not play, go to audio disc does not play (see page 23-83).■

   NO—Go to step 3.

3. Insert another disc.

   Does the disc load?

   YES—The original disc is faulty.■

   NO—
   - With navigation: Substitute a known-good audio disc changer (see page 23-113), and recheck. If the symptom/indication goes away, replace the original audio disc changer (see page 23-113).■
   - Without navigation: Substitute a known-good audio unit (see page 23-111) and recheck. If the symptom/indication goes away, replace the original audio unit (see page 23-111).■

Audio disc does not eject

NOTE:
- Check the vehicle battery condition first.
- Disc labels should not be used in the audio unit. They may damage the player mechanism.
- Check the connectors for poor connections or loose terminals.

1. Turn the ignition switch to ON (II).

2. Turn on the audio unit.

   Does the system turn on?

   YES—Go to step 3.

   NO—Go to Audio unit power switch will not turn on (see page 23-61).■

3. Check to see if the disc ejects correctly with no binding when you push the EJECT button.

   Does the disc eject properly?

   YES—Operation is normal.■

   NO—
   - With navigation: Substitute a known-good audio disc changer (see page 23-113), and recheck. If the symptom/indication goes away, replace the original audio disc changer (see page 23-113).■
   - Without navigation: Substitute a known-good audio unit (see page 23-111) and recheck. If the symptom/indication goes away, replace the original audio unit (see page 23-111).■

Symptom Troubleshooting (cont'd)

Audio disc changer does not load all six discs

NOTE:
- Check the vehicle battery condition first.
- Check the connectors for poor connections or loose terminals.
- Disc labels should not be used in the audio unit. They may damage the player mechanism.

1. Turn the ignition switch to ON (II).

2. Turn on the audio unit, and try loading six discs into the audio unit (in-dash disc changer).

   Does the audio unit accept all six discs?

   YES—Intermittent failure, the audio unit is OK at this time. ■

   NO—Go to step 3.

3. Try loading the disc player with six known-good discs.

   Does the audio unit (in-dash disc changer) accept all six discs?

   YES—At least one of the original discs is faulty. ■

   NO—
   - With navigation: Substitute known-good audio disc changer (see page 23-113), and recheck. If the symptom/indication goes away, replace the original audio disc changer (see page 23-113). ■
   - Without navigation: Substitute known-good audio unit (in-dash disc changer) (see page 23-111), and recheck. If the symptom/indication goes away, replace the original audio unit (in-dash disc changer) (see page 23-111). ■

Audio disc changer does not move between discs

NOTE:
- Check the vehicle battery condition first.
- Check the connectors for poor connections or loose terminals.
- Disc labels should not be used in the audio unit. They may damage the player mechanism.

1. Turn the ignition switch to ON (II).

2. Insert six discs into the audio unit (in-dash disc changer), and see if the changer moves between discs.

   Does the changer operate normally?

   YES—Intermittent failure, the disc changer is OK at this time. ■

   NO—Go to step 3.

3. Insert six known-good discs into the audio unit.

   Does the changer operate normally?

   YES—At least one of the original discs is faulty. ■

   NO—
   - With navigation: Substitute known-good audio disc changer (see page 23-113), and recheck. If the symptom/indication goes away, replace the original audio disc changer (see page 23-113). ■
   - Without navigation: Substitute known-good audio unit (in-dash disc changer) (see page 23-111), and recheck. If the symptom/indication goes away, replace the original audio unit (in-dash disc changer) (see page 23-111). ■

Special tools required
Diagnostics CD 07AAZ-SDBA100

Audio disc does not play

NOTE:
- Check the vehicle battery condition first.
- Check the connectors for poor connections or loose terminals.
- Disc labels should not be used in the audio unit. They may damage the CD player mechanism.

1. Turn the ignition switch to ON (II).

2. Turn on the audio unit, and try loading a disc.

   Does the disc load?

   YES—Go to step 3.

   NO—Go to Audio disc does not load (see page 23-81). ■

3. Insert another disc to see if the symptom can be duplicated.

   Does the disc play?

   YES—Operation is normal. ■

   NO—Go to step 4.

4. Insert audio diagnostic CD (T/N 07AAZ-SDBA100) in the audio unit.

   Does the disc play?

   YES—The original disc is faulty or has an unreadable format. ■

   NO—
   - With navigation: Substitute a known-good audio disc changer (see page 23-113), and recheck. If the symptom/indication goes away, replace the original audio disc changer (see page 23-113). ■
   - Without navigation: Substitute a known-good audio unit (see page 23-111), and recheck. If the symptom/indication goes away, replace the original audio unit (see page 23-111). ■

Special tools required
- Diagnostics CD 07AAZ-SDBA100
- Skip test CD 07AAZ-SDBA200
- Skip test CD 07AAZ-SDBA300

Audio disc skips

NOTE:
- Check the vehicle battery condition first.
- Check the connectors for poor connections or loose terminals.
- Disc labels should not be used in the audio unit. They may damage the CD player mechanism.

1. Confirm the vehicles tires are properly inflated.

2. Check the customer's disc for scratches and fingerprints.

   NOTE: The following test should be done with the audio unit bass and treble set to the customer's listening settings. When comparing to known-good vehicles, do the comparison on the same model and trim level.

3. Test-drive the vehicle to identify when the customer's disc skips. The audio diagnostic CD (T/N 07AAZ-SDBA100) can be used if the customer's CD is not available; use tracks 10—12.

   Does the disc skip?

   YES—Go to step 4.

   NO—Operation is normal. ■

4. Compare the customer's CD that skips to a known-good vehicle under the same conditions.

   Does the disc skip in the known-good vehicle under the same conditions?

   YES—The disc player operation is normal, the problem is with the customer's disc. ■

   NO—Go to step 5.

   NOTE: Do the following test with vehicle parked and the engine running.

(cont'd)

Symptom Troubleshooting (cont'd)

5. Insert the diagnostic skip test CD (T/N 07AAZ-SDBA300). Play tracks 2—11, and note on which track number(s) where the disc starts skipping. Do the same test on a known-good vehicle.

   Does the disc skip on the same track(s) as the known-good vehicle?

   YES—Operation is normal. ■

   NO—Go to step 6.

6. Insert the diagnostic skip test CD (T/N 07AAZ-SDBA200). Play tracks 7—11 and tracks 13—15 and note on which track number(s) the disc starts skipping. Do the same test on a known-good vehicle.

   Does the disc skip on the same track number(s) as the known-good vehicle?

   YES—Operation is normal. ■

   NO—
   - With navigation: Substitute a known-good audio disc changer (see page 23-113), and recheck. If the symptom/indication goes away, replace the original audio disc changer (see page 23-113). ■
   - Without navigation: Substitute a known-good audio unit (see page 23-111), and recheck. If the symptom/indication goes away, replace the original audio unit (see page 23-111). ■

Audio unit button does not work

NOTE:
- Check the vehicle battery condition first.
- In order to troubleshoot the main power switch, go to Power switch will not turn on (see page 23-61).

1. Go to the audio button, knob, and remote switch detection mode in the audio self-diagnostic function (see page 23-46). Operate all items in the appropriate switch list.

   Switch list

With navigation:	TITLE, XM, FM/AM, PWR/VOL, SOUND, CD, AUX, 1-6, CATEGORY, TUNE, SKIP, SCAN/A.SEL, MAP/GUIDE, CANCEL, MENU, AUDIO, ☼ ☽, INFO, SETUP
With premium:	1-6, LOAD, EJECT, FM, AM, XM, CD/AUX, TITLE, CLOCK, SCAN, CATEGORY, PWR, SKIP, A.SEL, RETURN, ENTER, MENU
Without premium:	1-6, EJECT, FM, AM, CD, TUNE/SOUND/CD, AUX, TITLE, CLOCK, SCAN, FOLDER, RDT/RDM, A.SEL, SKIP, PWR/VOL

   Are all the items in the appropriate switch list detected?

   YES—Operation is normal. ■

   NO—Substitute a known-good audio unit with navigation (see page 23-110), without navigation (see page 23-111), and recheck. If the symptom/indicated goes away, replace the original audio unit with navigation (see page 23-110), without navigation (see page 23-111). If the symptom is still present, substitute a known-good audio switch panel (see page 23-112), and recheck. If the symptom/indication goes away, replace the original audio switch panel (see page 23-112). ■

Audio unit disc indicator does not work

NOTE:
- Check the vehicle battery condition first.
- Discs with labels should not be used in the audio unit. They may damage the player mechanism.

1. Turn on the audio system.

2. Insert a known-good disc or press the EJECT button.

   Is the DISC indicator (LED) indicated?

   YES—The audio unit is OK at this time. Check for loose or poor connections at audio unit and audio panel. ■

   NO—
   - With navigation: Substitute a known-good audio disc changer (see page 23-113), and recheck. If the symptom/indication goes away, replace the original audio disc changer (see page 23-113). ■
   - Without navigation: Substitute a known-good audio unit (see page 23-111), and recheck. If the symptom/indicated goes away, replace the original audio unit (see page 23-111). If the symptom is still present, substitute a known-good audio switch panel (see page 23-112) and recheck. If the symptom/indication goes away, replace the original audio switch panel (see page 23-112). ■

Booming sound while driving with audio unit on or off

NOTE:
- Check for all system's DTCs first with the HDS. If there are any DTCs stored, go to the indicated DTC's troubleshooting.
- Check the vehicle battery condition first.
- Check the connectors for poor connections or loose terminals.

1. Turn the ignition switch to ON (II).

2. Operate the audio unit, and check the function of the speakers.

   Is a booming sound or a low-frequency hum heard from the speakers?

   YES—Go to step 3.

   NO—Go to symptom troubleshooting No sound is heard from speaker(s).

   - With premium audio (see page 23-63). ■
   - Without premium audio (see page 23-68). ■

3. Turn the audio system off.

4. Make sure all doors, hood, and the trunk are closed.

5. Start the engine, and let it idle.

6. Do the active noise cancellation (ANC) self-diagnostic function (see page 23-52).

(cont'd)

Symptom Troubleshooting (cont'd)

7. Check for test items on tests 1 through 8.

   NOTE: Move on to the next test item within 50 seconds, or the self-diagnostic test ends.

   Does low-frequency hum sound heard from speakers for more than 5 second for all test items?

   YES—Go to step 8.

   NO—Go to the appropriate step listed.

   - If the all tests failed:
     With premium audio, go to step 15.
     Without premium audio, replace the audio unit (see page 23-111).
   - If the 3rd test failed:
     With premium audio, go to step 29.
     Without premium audio, replace the audio unit (see page 23-111).
   - If the 4th test failed,
     – With premium audio, go to step 34.
     – Without premium audio, replace the audio unit (see page 23-111).
   - If the 5th test failed,
     – With navigation: Go to step 39.
     – Without navigation: Go to step 48.
   - If the 6th test failed, go to step 59.
   - If the 7th test failed, go to step 70.
   - If the 8th test failed, go to step 80.

8. Turn the ignition switch to LOCK (0).

9. Disconnect the HDS from the DLC.

10. Start the engine, and let it idle.

11. Do the active noise cancellation (ANC) self-diagnostic function (see page 23-52).

12. Do the 10th test by pressing the No. 1 button.

13. Set the parking brake, and hold the engine speed at 2,500 rpm (A/T in P or N, M/T in neutral), and move on to the 11th test by pressing the No. 1 button.

14. Press the No. 1 button several times to turn the ANC on and off.

    Do you hear the low-frequency hum sound turn on and off while pressing the No. 1 button?

    YES—Intermittent failure, the system is OK at this time. Check for poor connections or loose terminals between the audio unit, the ECM/PCM, and the under dash fuse box. Then, go to step 1 and recheck.

    NO—Replace the audio unit. ■

    - With premium audio (see page 23-110).
    - Without premium audio (see page 23-111).

15. Turn the ignition switch to LOCK (0).

16. Connect a voltmeter between stereo amplifier connector A (24P) terminals No. 11 and No. 22.

    NOTE: Use the voltmeter in AC range.

STEREO AMPLIFIER CONNECTOR A (24P)

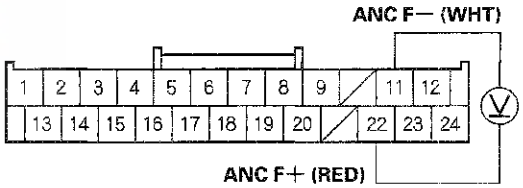

Wire side of female terminals

17. Turn the ignition switch to ON (II).

18. Prepare to do the active noise cancellation (ANC) self-diagnostic function (see page 23-52).

19. Measure the voltage during the 1st test with the display indicating OFF (press the No. 1 button to switch from ON to OFF).

    NOTE: Measure voltage within 50 seconds after you started the 1st test.

Is there about 0.5 V?

YES—Replace the stereo amplifier (see page 23-115).■

NO—Go to step 20.

20. Turn the ignition switch to LOCK (0).

21. Connect a voltmeter between stereo amplifier connector A (24P) terminals No. 12 and No. 23.

    NOTE: Use the voltmeter in AC range.

STEREO AMPLIFIER CONNECTOR A (24P)

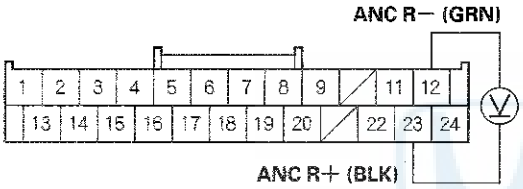

Wire side of female terminals

22. Turn the ignition switch to ON (II).

23. Prepare to do the active noise cancellation (ANC) self-diagnostic function (see page 23-52).

24. Measure the voltage during the 1st test with the display indicating OFF (press the No. 1 button to switch from ON to OFF).

    NOTE: Measure voltage within 50 seconds after you started the 1st test, or the self-diagnostic test ends.

    Is there about 0.2 V?

    YES—Replace the stereo amplifier (see page 23-115).■

    NO—Go to step 25.

25. Turn the ignition switch to LOCK (0).

26. Disconnect audio unit connector C (16P) and stereo amplifier connector A (24P).

27. Check for continuity between audio unit connector C (16P) and stereo amplifier connector A (24P) according to the table.

Audio unit connector	Stereo amplifier connector	Wire color
C1	A12	GRN
C2	A23	BLK
C9	A11	WHT
C10	A22	RED

AUDIO UNIT CONNECTOR C (16P)

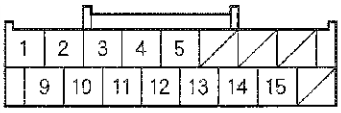

Wire side of female terminals

STEREO AMPLIFIER CONNECTOR A (24P)

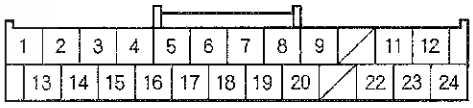

Wire side of female terminals

Is there continuity?

YES—Go to step 28.

NO—Repair open in the wire between audio unit connector C (16P) and stereo amplifier connector A (24P).■

(cont'd)

Symptom Troubleshooting (cont'd)

28. Check for continuity between body ground and audio unit connector C (16P) according to the table.

Audio unit connector	Wire color
C1	GRN
C2	BLK
C9	WHT
C10	RED

AUDIO UNIT CONNECTOR C (16P)

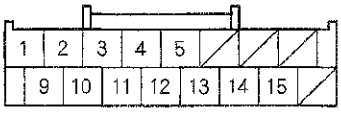

Wire side of female terminals

Is there continuity?

YES—Repair short to body ground in the wire between audio unit connector C (16P) and stereo amplifier connector A (24P).■

NO—Replace the audio unit.■

- With premium audio (see page 23-110).
- Without premium audio (see page 23-111).

29. Turn the ignition switch to LOCK (0).

30. Disconnect audio unit connector C (16P) and stereo amplifier connector A (24P).

31. Check for continuity between audio unit connector C (16P) and stereo amplifier connector A (24P) according to the table.

Audio unit connector	Stereo amplifier connector	Wire color
C9	A11	WHT
C10	A22	RED

AUDIO UNIT CONNECTOR C (16P)
Wire side of female terminals

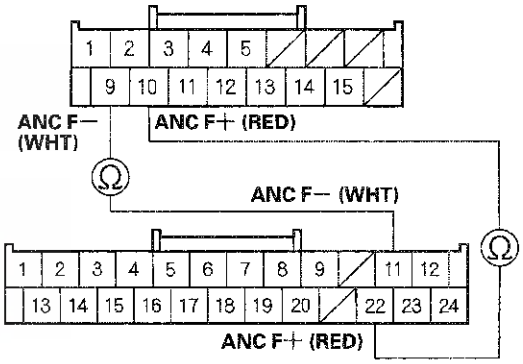

STEREO AMPLIFIER CONNECTOR A (24P)
Wire side of female terminals

Is there continuity?

YES—Go to step 32.

NO—Repair open in the wire between audio unit connector C (16P) and stereo amplifier connector A (24P).■

32. Check for continuity between body ground and audio unit connector C (16P) terminals No. 9 and No. 10 individually.

AUDIO UNIT CONNECTOR C (16P)

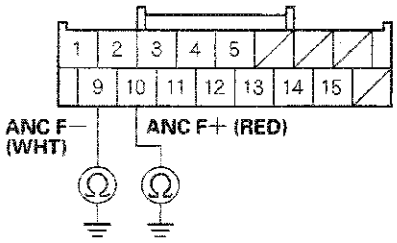

Wire side of female terminals

Is there continuity?

YES—Repair short to body ground in the wire between audio unit connector C (16P) and stereo amplifier connector A (24P).■

NO—Go to step 33.

33. Check for continuity between audio unit connector C (16P) terminals No. 9 and No. 10.

AUDIO UNIT CONNECTOR C (16P)

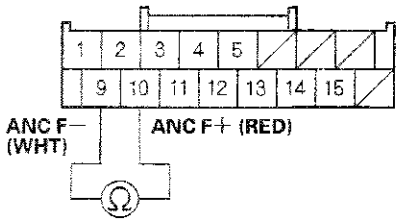

Wire side of female terminals

Is there continuity?

YES—Repair short in the wire between audio unit connector C (16P) and stereo amplifier connector A (24P).■

NO—Replace the audio unit.■

- With navigation (see page 23-110)
- Without navigation (see page 23-111)

34. Turn the ignition switch to LOCK (0).

35. Disconnect audio unit connector C (16P) and stereo amplifier connector A (24P).

36. Check for continuity between audio unit connector C (16P) and stereo amplifier connector A (24P) according to the table.

Audio unit connector	Stereo amplifier connector	Wire color
C1	A12	GRN
C2	A23	BLK

AUDIO UNIT CONNECTOR C (16P)
Wire side of female terminals

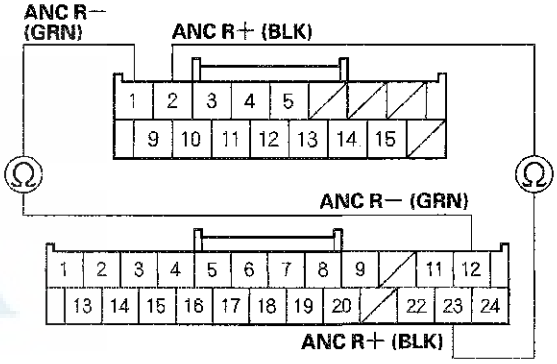

STEREO AMPLIFIER CONNECTOR A (24P)
Wire side of female terminals

Is there continuity?

YES—Go to step 37.

NO—Repair open in the wire between audio unit connector C (16P) and stereo amplifier connector A (24P).■

(cont'd)

Symptom Troubleshooting (cont'd)

37. Check for continuity between body ground and audio unit connector C (16P) terminals No. 1 and No. 2 individually.

AUDIO UNIT CONNECTOR C (16P)

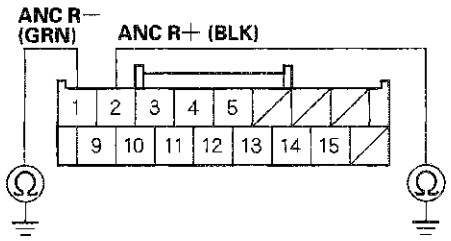

Wire side of female terminals

Is there continuity?

YES—Repair short to body ground in the wire between audio unit connector C (16P) and the stereo amplifier connector A (24P). ■

NO—Go to step 38.

38. Check for continuity between audio unit connector C (16P) terminals No. 1 and No. 2.

AUDIO UNIT CONNECTOR C (16P)

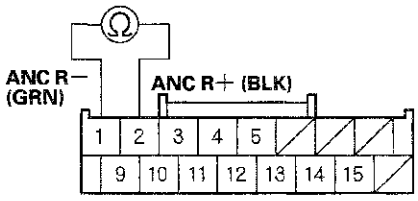

Wire side of female terminals

Is there continuity?

YES—Repair short in the wire between audio unit connector C (16P) and stereo amplifier connector A (24P). ■

NO—Replace the audio unit . ■

- With navigation (see page 23-110)
- Without navigation (see page 23-111)

39. Turn the ignition switch to LOCK (0).

40. Connect a voltmeter between audio unit connector C (16P) terminal No. 4 and No. 11.

NOTE: Use the voltmeter in AC range.

AUDIO UNIT CONNECTOR C (16P)

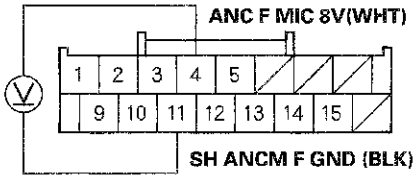

Wire side of female terminals

41. Turn the ignition switch to ACCESSORY (I).

42. Make a loud noise in front of the HFL-navigation-ANC microphone.

Does the voltage change when making a loud noise in front of the microphone?

YES—Replace the audio unit. ■

- With navigation (see page 23-110)
- Without navigation (see page 23-111)

NO—Go to step 43.

43. Turn the ignition switch to LOCK (0).

44. Disconnect audio unit connector C (16P) and the HFL-navigation-ANC microphone 7P connector.

45. Check for continuity between audio unit connector C (16P) terminal No. 4 and the HFL-navigation-ANC microphone 7P connector terminal No. 4.

AUDIO UNIT CONNECTOR C (16P)
Wire side of female terminals

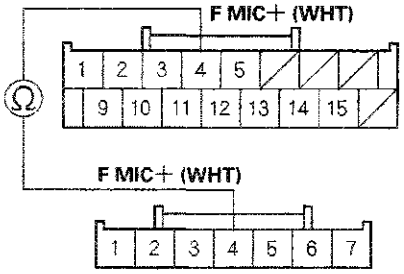

HFL-NAVIGATION-ANC MICROPHONE 7P CONNECTOR
Wire side of female terminals

Is there continuity?

YES—Go to step 46.

NO—Open in the wire between audio unit connector C (16P) and the HFL-navigation-ANC microphone 7P connector. Replace the affected shielded harness.■

46. Check for continuity between audio unit connector C (16P) terminal No. 4 and body ground.

AUDIO UNIT CONNECTOR C (16P)

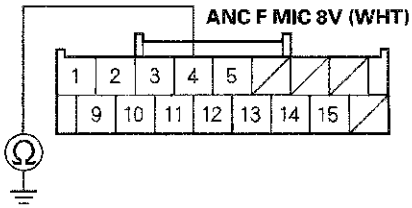

Wire side of female terminals

Is there continuity?

YES—Short to body ground in the wire between audio unit connector C (16P) and the HFL-navigation-ANC microphone 7P connector. Replace the affected shielded harness.■

NO—Go to step 47.

47. Check for continuity between HFL-navigation-ANC microphone 7P connector terminal No. 1 and body ground.

HFL-NAVIGATION-ANC MICROPHONE 7P CONNECTOR

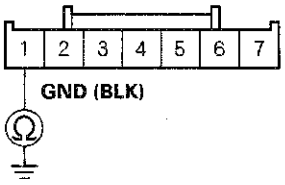

Wire side of female terminals

Is there continuity?

YES—Replace the HFL-navigation-ANC microphone (see page 23-242).■

NO—Repair open in the wire between HFL-navigation-ANC microphone and body ground (G501).■

(cont'd)

Symptom Troubleshooting (cont'd)

48. Turn the ignition switch to LOCK (0).

49. Connect a voltmeter between audio unit connector C (16P) terminals No. 4 and No. 11.

    NOTE: Use the voltmeter in AC range.

AUDIO UNIT CONNECTOR C (16P)

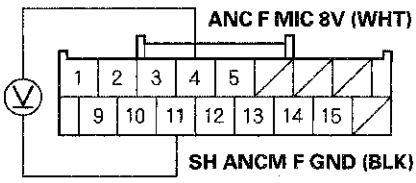

Wire side of female terminals

50. Turn the ignition switch to ACCESSORY (I).

51. Make a loud noise in front of the active noise cancellation rear microphone.

    Does the voltage change when making a loud noise in front of the microphone?

    YES—Replace the audio unit.■

    NO—Go to step 52.

52. Turn the ignition switch to LOCK (0).

53. Disconnect audio unit connector C (16P) and the active noise cancellation front microphone 3P connector.

54. Connect active noise cancellation front microphone 3P connector terminals No. 1 and No. 3 with a jumper wire.

ACTIVE NOISE CANCELLATION FRONT MICROPHONE 3P CONNECTOR

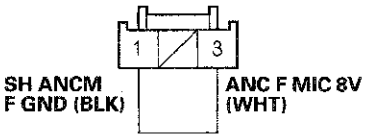

JUMPER WIRE

Wire side of female terminals

55. Check for continuity between audio unit connector C (16P) terminals No. 4 and No. 11.

AUDIO UNIT CONNECTOR C (16P)

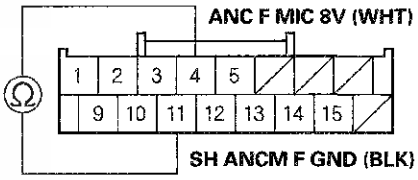

Wire side of female terminals

Is there continuity?

YES—Go to step 56.

NO—Open in the wire between audio unit connector C (16P) and the active noise cancellation front microphone 3P connector. Replace the affected shielded harness.■

56. Remove the jumper wire.

57. Check for continuity between audio unit connector C (16P) terminals No. 4 and No. 11.

AUDIO UNIT CONNECTOR C (16P)

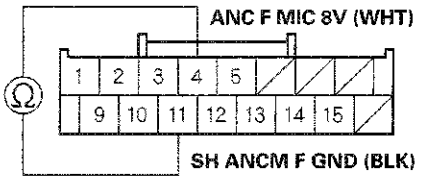

Wire side of female terminals

Is there continuity?

YES—Short in the wire between audio unit connector C (16P) and the active noise cancellation front microphone 3P connector. Replace the affected shielded harness. ■

NO—Go to step 58.

58. Check for continuity between audio unit connector C (16P) terminal No. 4 and body ground.

AUDIO UNIT CONNECTOR C (16P)

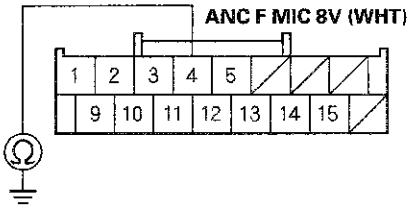

Wire side of female terminals

Is there continuity?

YES—Short to body ground in the wire between audio unit connector C (16P) and the active noise cancellation front microphone 3P connector. Replace the affected shielded harness. ■

NO—Replace the active noise cancellation front microphone (see page 23-116). ■

(cont'd)

Symptom Troubleshooting (cont'd)

59. Turn the ignition switch to LOCK (0).

60. Connect a voltmeter between audio unit connector C (16P) terminals No. 5 and No. 12.

    NOTE: Use the voltmeter in AC range.

AUDIO UNIT CONNECTOR C (16P)

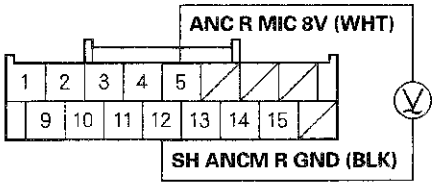

Wire side of female terminals

61. Turn the ignition switch to ACCESSORY (I).

62. Make a loud noise in front of the active noise cancellation rear microphone.

    Does the voltage change when making a loud noise in front of the microphone?

    YES—Replace the audio unit. ■

    - With navigation (see page 23-110)
    - Without navigation (see page 23-111)

    NO—Go to step 63.

63. Turn the ignition switch to LOCK (0).

64. Disconnect audio unit connector C (16P) and the active noise cancellation rear microphone 3P connector.

65. Connect active noise cancellation rear microphone 3P connector terminals No. 1 and No. 3 with a jumper wire.

ACTIVE NOISE CANCELLATION REAR MICROPHONE 3P CONNECTOR

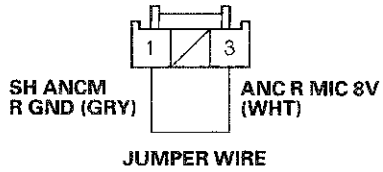

Wire side of female terminals

66. Check for continuity between audio unit connector C (16P) terminals No. 5 and No. 12.

AUDIO UNIT CONNECTOR C (16P)

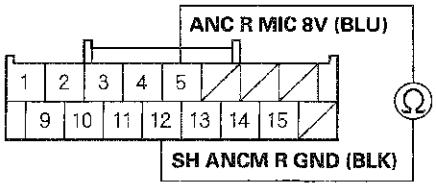

Wire side of female terminals

    Is there continuity?

    YES—Go to step 67.

    NO—Open in the wire between audio unit connector C (16P) and the active noise cancellation rear microphone 3P connector. Replace the wire harness or the under-dash fuse/relay box (see page 22-84). ■

67. Remove the jumper wire.

68. Check for continuity between audio unit connector C (16P) terminals No. 5 and No. 12.

AUDIO UNIT CONNECTOR C (16P)

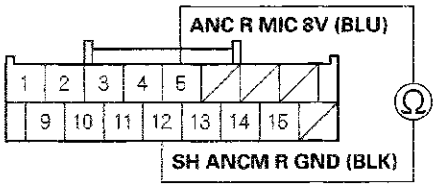

Wire side of female terminals

Is there continuity?

YES—Short in the wire between audio unit connector C (16P) and the active noise cancellation rear microphone 3P connector. Replace the wire harness or the under-dash fuse/relay box (see page 22-84).■

NO—Go to step 69.

69. Check for continuity between audio unit connector C (16P) terminal No. 5 and body ground.

AUDIO UNIT CONNECTOR C (16P)

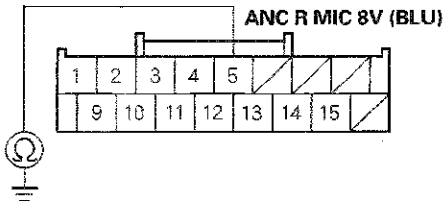

Wire side of female terminals

Is there continuity?

YES—Short to body ground in the wire between audio unit connector C (16P) and the active noise cancellation rear microphone 3P connector. Replace the wire harness or the under-dash fuse/relay box (see page 22-84).■

NO—Replace the active noise cancellation rear microphone (see page 23-116).■

70. Turn the ignition switch to LOCK (0).

71. Start the engine, and let it idle.

72. Measure voltage between audio unit connector C (16P) terminal No. 15 and body ground.

AUDIO UNIT CONNECTOR C (16P)

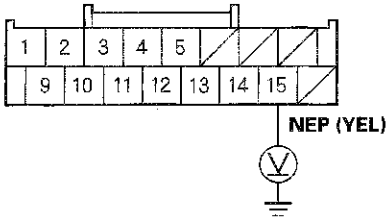

Wire side of female terminals

Is there about 5 V (pulses)?

YES—Replace the audio unit.■

- With navigation (see page 23-110)
- Without navigation (see page 23-111)

NO—Go to step 73.

73. Turn the ignition switch to LOCK (0).

74. Jump the SCS line with the HDS.

75. Disconnect audio unit connector C (16P) and ECM/PCM connector A (49P).

76. Connect ECM/PCM connector A (49P) terminal No. 29 to body ground with a jumper wire.

ECM/PCM CONNECTOR A (49P)

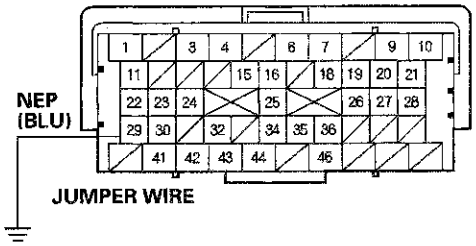

Terminal side of female terminals

(cont'd)

Symptom Troubleshooting (cont'd)

77. Check continuity between audio unit connector C (16P) terminal No. 15 and body ground.

AUDIO UNIT CONNECTOR C (16P)

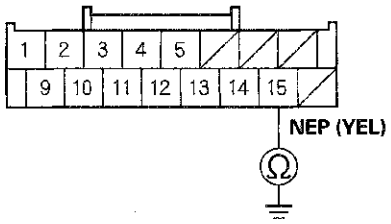

Wire side of female terminals

Is there continuity?

YES—Go to step 78.

NO—Repair open in the wire between audio unit connector C (16P) and ECM/PCM connector A (49P).■

78. Remove the jumper wire.

79. Check continuity between audio unit connector C (16P) terminal No. 15 and body ground.

AUDIO UNIT CONNECTOR C (16P)

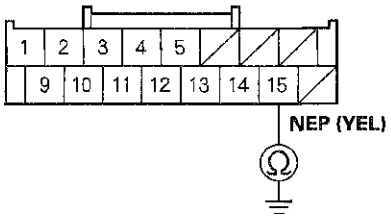

Wire side of female terminals

Is there continuity?

YES—Repair short to body ground in the wire between audio unit connector C (16P) and ECM/PCM connector A (49P).■

NO—Update the ECM/PCM if it does not have the latest software (see page 11-215) or substitute a known-good ECM/PCM (see page 11-216).■

80. Turn the ignition switch to LOCK (0).

81. Do the MICU input test (see step 1 on page 22-138).

Is the B-CAN line between the audio unit and the MICU OK?

YES—Replace the audio unit.■

- With navigation (see page 23-110)
- Without navigation (see page 23-111)

NO—Repair open in the wire between audio unit connector B (20P) and MICU connector P (20P).■

Error code: XM NO SIGNAL is displayed

NOTE:
- Check the vehicle battery condition first.
- Check the connectors for poor connections or loose terminals.

1. Park vehicle outside with a clear view of the southern horizon.

2. Turn the ignition switch to ON (II).

3. Turn on the audio unit, and select XM radio.

   Does the XM radio receive a signal?

   YES—Reception interference operation is normal.■

   NO—Go to step 4.

4. Turn the ignition switch to LOCK (0).

5. Check the connection at XM antenna 2P connector and XM receiver connector B (2P).

   Are the connectors connected?

   YES—Go to step 6.

   NO—Reconnect the connectors and recheck XM radio operation. If the signal is restored, the system is OK. If the signal is not restored go to step 6.

6. Turn the ignition switch to ON (II).

7. Measure the voltage between XM receiver connector A (14P) terminal No. 1 and body ground.

XM RECEIVER CONNECTOR A (14P)

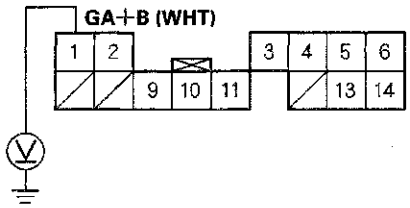

Wire side of female terminals

Is there battery voltage?

YES—Go to step 8.

NO—Repair open in the wire between audio unit connector E (14P) terminal No. 1 and XM receiver connector A (14P) terminal No. 1.■

(cont'd)

Symptom Troubleshooting (cont'd)

8. Measure the voltage between XM receiver connector A (14P) terminal No. 11 and body ground.

XM RECEIVER CONNECTOR A (14P)

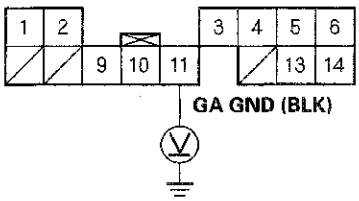

Wire side of female terminals

Is there less than 0.1 V?

YES—Go to step 9.

NO—Repair open in the wire between audio unit connector E (14P) terminal No. 11 and XM receiver connector A (14P) terminal No. 11.

9. Substitute a known-good XM antenna.

Does the XM radio receive a signal?

YES—Replace the XM antenna (see page 23-122). ■

NO—Substitute a known-good XM antenna lead. If the XM receiver receives signal, replace the original XM antenna lead. If the XM receiver does not receive signal, substitute a known-good XM receiver (see page 23-115), and recheck. If the symptom/indication goes away, replace the original XM receiver (see page 23-115). ■

Error code: XM ANTENNA is displayed

NOTE:
- Check the vehicle battery condition first.
- Check the connectors for poor connections or loose terminals.
- Check XM radio reception in an open area. Poor reception/interference can be caused by tall buildings, mountains, or high-voltage power lines.

1. Check the connector at the XM receiver.

Is the connector connected?

YES—Go to step 2.

NO—Reconnect the connector. If the error message does not go away, go to step 2.

2. Check the connector at the XM antenna.

Is the connector connected?

YES—Go to step 3.

NO—Reconnect the connector. If the error message does not go away, go to step 3.

3. Check the pin locations in the XM receiver connector and the XM antenna connector.

Are the pins in the correct locations?

YES—Go to step 4.

NO—Correct the pin locations. If the error message does not go away, go to step 4.

4. Substitute a known-good XM antenna (see page 23-122).

   Is the error message gone?

   YES—Replace the XM antenna (see page 23-122). ■

   NO—Go to step 5.

5. Substitute a known-good XM receiver (see page 23-115).

   Is the error message gone?

   YES—Substitute a known-good XM receiver (see page 23-115), and recheck. If the symptom/indication goes away, replace the XM receiver (see page 23-115). ■

   NO—Replace the XM antenna lead. ■

XM radio display is blank and no station information is displayed

NOTE:
- Check the vehicle battery condition first.
- Check the connectors for poor connections or loose terminals.

1. Turn the ignition switch to ON (II).

2. Measure the voltage between XM receiver connector A (14P) terminal No. 1 and body ground.

XM RECEIVER CONNECTOR A (14P)

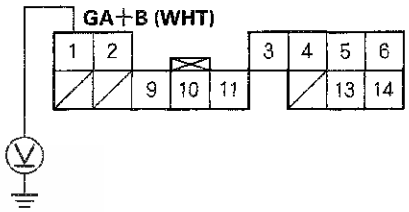

Wire side of female terminals

   Is there battery voltage?

   YES—Go to step 3.

   NO—Repair open in the wire between XM receiver connector A (14P) terminal No. 1 and audio unit connector E (14P) terminal No. 1. ■

(cont'd)

Symptom Troubleshooting (cont'd)

3. Measure the voltage between XM receiver connector A (14P) terminal No. 11 and body ground.

XM RECEIVER CONNECTOR A (14P)

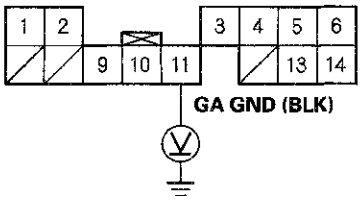

Wire side of female terminals

Is there less than 0.1 V?

YES—Go to step 4.

NO—Repair open in the wire between XM receiver connector A (14P) terminal No. 11 and audio unit connector E (14P) terminal No. 11.■

4. Turn the ignition switch to LOCK (0).

5. Measure the voltage between XM receiver connector A (14P) terminal No. 2 and body ground.

XM RECEIVER CONNECTOR A (14P)

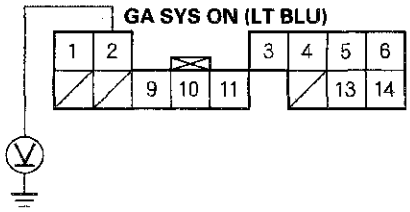

Wire side of female terminals

Is there 10 V or more present?

YES—Go to step 6.

NO—Substitute a known-good XM receiver (see page 23-115), and recheck. If 10 V or more is present, replace the original XM receiver (see page 23-115). ■

6. Turn the ignition switch to ON (II).

7. Measure the voltage between audio unit connector E (14P) terminal No. 2 and body ground.

AUDIO UNIT CONNECTOR E (14P)

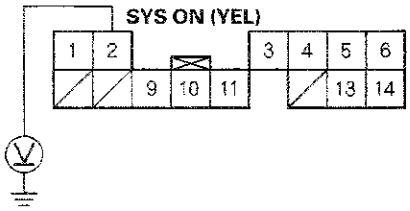

Wire side of female terminals

Is there less than 0.1 V?

YES—Go to step 8.

NO—Substitute a known-good audio unit (see page 23-110), and recheck. If 0.1 V or less are present, replace the original audio unit (see page 23-110).■

8. Turn the ignition switch to LOCK (0).

9. Disconnect audio unit connector E (14P) and XM receiver connector A (14P).

10. Check for continuity between audio unit connector E (14P) and XM receiver connector A (14P) as shown.

AUDIO UNIT CONNECTOR E (14P)
Wire side of female terminals

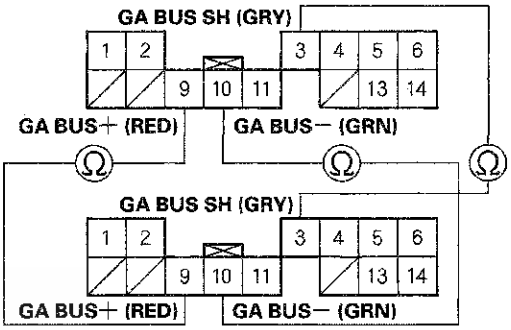

XM RECEIVER CONNECTOR A (14P)
Wire side of female terminals

Is there continuity?

YES—Go to step 11.

NO—Open in the wire(s) between the audio unit and the XM receiver. Replace the affected shielded harness.■

(cont'd)

Symptom Troubleshooting (cont'd)

11. Check for continuity between XM receiver connector A (14P) and body ground as shown.

XM RECEIVER CONNECTOR A (14P)

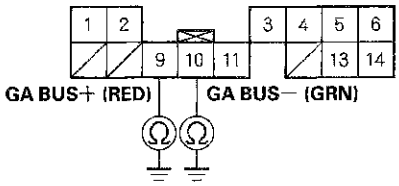

Wire side of female terminals

Is there continuity?

YES—Repair short to body ground in the wire(s) between the audio unit and XM receiver. ■

NO—Go to step 12.

12. Check for continuity between the terminals of XM receiver connector A (14P) according to the table.

From terminal	To terminals
A3 (GRY)	A9 (RED), A10 (GRN)
A9 (RED)	A10 (GRN)

XM RECEIVER CONNECTOR A (14P)

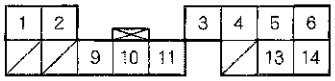

Wire side of female terminals

Is there continuity between any of the terminals?

YES—Short in the wire(s) between the audio unit and the XM receiver. Replace the affected shielded harness. ■

NO—Substitute a known-good audio unit (see page 23-110), and recheck. If the symptom/indication goes away, replace the original audio unit (see page 23-110). If the symptom is still present, substitute a known-good XM receiver (see page 23-115), and recheck. If the symptom/indication goes away, replace the original XM receiver (see page 23-115). ■

XM radio preset memory is lost

NOTE:
- Check the vehicle battery condition first.
- Check the connectors for poor connections or loose terminals.

1. Turn the ignition switch to ON (II).

2. Turn on the audio unit, and set each of the XM radio channel preset buttons.

   Does each of the XM radio channel preset buttons set properly?

   YES—Go to step 3.

   NO—Substitute a known-good XM Receiver (see page 23-115), and recheck. If the symptom/indication goes away, replace the original XM Receiver (see page 23-115). ■

3. Turn the ignition switch to LOCK (0) for 1 minute, then turn it back to ON (II).

4. Test all of the XM radio channel preset buttons for proper recall operation.

   Do the preset buttons recall the XM radio stations?

   YES—System is normal at this time. Check connections at the audio unit. ■

   NO—Go to step 5.

5. Turn the ignition switch to LOCK (0).

6. Disconnect XM receiver connector A (14P).

7. Measure the voltage between XM receiver connector A (14P) terminal No. 1 and body ground.

XM RECEIVER CONNECTOR A (14P)

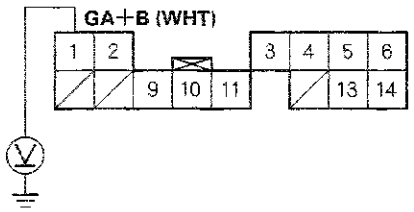

Wire side of female terminals

Is there battery voltage?

YES—Go to step 8.

NO—Repair open in the wire between audio unit connector E (14P) terminal No. 1 and XM receiver connector A (14P) terminal No. 1.■

8. Reconnect XM receiver connector A (14P).

9. Measure the voltage between XM receiver connector A (14P) terminal No. 11 and body ground.

XM RECEIVER CONNECTOR A (14P)

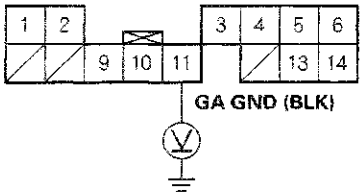

Wire side of female terminals

Is there less than 0.5 V?

YES—Substitute a known-good audio unit (see page 23-115), and recheck. If the symptom/indication goes away, replace the audio unit (see page 23-115).■

NO—Repair open in the wire between audio unit connector E (14P) terminal No. 11 and XM receiver connector A (14P) terminal No. 11.■

Poor or no sound with XM radio (Audio unit does display XM channels)

NOTE:
- Check the vehicle battery condition first.
- Check the connectors for poor connections or loose terminals.
- Check the radio reception in an open area. Compare it to a known-good vehicle whenever possible. Poor reception/interference can be caused by tall buildings, mountains, or high-voltage power lines that are nearby.
- If you can only tune to channel 000, 001, 174, and 247, make sure that the audio unit is set to the channel mode (see owner's manual), if it is set to the channel mode, call XM Satellite Radio customer support and check the account activation status.

1. Turn the ignition switch to ON (II).

2. Turn on the audio unit, and select XM radio.

3. Check for an error message on the display.

   Are there any messages displayed?

   YES—Go to error code list (see page 23-57).■

   NO—Go to step 4.

4. Turn the ignition switch to LOCK (0).

(cont'd)

Symptom Troubleshooting (cont'd)

5. Disconnect audio unit connector E (14P) and XM receiver connector A (14P).

6. Check for continuity between XM receiver connector A (14P) and body ground according to the table. Then check for continuity between the same terminals listed in the table and audio unit connector E (14P) terminal No. 4 (the harness shield).

XM receiver connector	Wire color
A6	BLK
A5	GRN
A13	WHT
A14	RED

XM RECEIVER CONNECTOR A (14P)

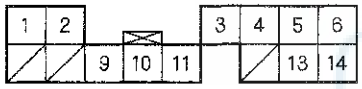

Wire side of female terminals

Is there continuity?

YES—Short in the wire between the audio unit and the XM receiver. Replace the affected shielded harness. ■

NO—Go to step 7.

7. Check for continuity between XM receiver connector A (14P) and audio unit connector E (14P) according to the table.

XM receiver connector	Audio unit connector	Wire color
A1	E1	WHT
A2	E2	LT BLU
A5	E5	GRN
A6	E6	BLK
A9	E9	RED
A10	E10	GRN
A11	E11	BLK
A13	E13	WHT
A14	E14	RED

XM RECEIVER CONNECTOR A (14P)

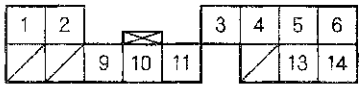

Wire side of female terminals

Is there continuity?

YES—Substitute a known-good XM receiver (see page 23-115), and recheck. If the symptom/indication goes away, replace the original XM receiver (see page 23-115). If symptom/indication is still present, replace the audio unit (see page 23-110). ■

NO—Open in the wire between the audio unit and the XM receiver; replace the affected shielded harness. ■

Sound Quality Diagnosis

Special tools required
Diagnostics CD 07AAZ-SDBA100

Use the following tests to check sound quality.

NOTE: Before beginning the following tests, write down the customer's bass, treble, fader and balance settings, then set them to their center positions for the testing.

Left/Right Channel ID

Do this test to confirm proper channel routing.

1. Insert the audio diagnostic CD (T/N 07AAZ-SDBA100) into the audio unit.

2. Play track No. 1 (left, both, right channel ID) at a normal, or slightly higher than normal, volume level.

3. The voice should be audible only from the channel or channels when indicated.

   - If the channel ID is correct for each side, go to phase test.
   - If the channel ID is not correct, check for
     – Shorted speaker wire
     – Faulty amplifier
     – Faulty audio unit

Special tools required
Diagnostics CD 07AAZ-SDBA100

Use the following tests to check sound quality.

NOTE: Before beginning the following tests, write down the customer's bass, treble, fader and balance settings, then set them to their center positions for the testing.

Phase Test

Do this test to confirm proper speaker phasing.

1. Insert the audio diagnostic CD (T/N 07AAZ-SDBA100) into the audio unit.

2. Play track No. 2 (phase) at a normal, or slightly higher than normal, volume level.

3. The voice should sound centered and focused when it is in-phase.

4. The voice should sound diffused, and have less bass when it is out of phase.

   - If the voice changes from in-phase to out of phase as indicated by the prompt, the phasing is correct. Go to electrical noise test (see page 23-106).
   - If the voice always sounds out of phase, phasing is not correct. Check for:
     – Crossed speaker wire
     – Faulty amplifier
     – Faulty audio unit

Sound Quality Diagnosis (cont'd)

Special tools required
Diagnostics CD 07AAZ-SDBA100

Electrical Noise Test

Do this test to check for electrical noise being induced into the audio system.

NOTE: Electrical noise may be caused by outside sources that cannot be handled by the audio system. Make sure you remove any cell phones and/or turn off any aftermarket devices before beginning this test.

1. Insert the audio diagnostic CD (T/N 07AAZ-SDBA100) into the audio unit.

2. Play track No. 4 (digital zero) at a normal, or slightly higher than normal, volume level.

3. Operate any electrical device that may create electrical noise in the audio system, including starting the engine.

4. Play track No. 5 (near digital zero) at a normal, or slightly higher than normal, volume level.

5. Operate any electrical device that may create electrical noise in the audio system, including starting the engine.

6. Play track No. 6 (SNR) at a normal, or slightly higher than normal, volume level.

7. Operate any electrical device that may create electrical noise in the audio system, including starting the engine.

   - If no abnormal noise is heard, go to the individual speaker test (see page 23-107).
   - If the noise is present only during the SNR track, replace the audio unit.
   - If the noise is heard during the digital zero or near digital zero track, check for:
     - Poor ground at the audio unit, amplifier, engine, or battery cable
     - Pinched or shorted speaker or amplifier wire
     - Faulty amplifier
     - Faulty audio unit
     - Other faulty components causing excessive electrical noise (ignition coils, alternator, door lock actuators, etc.). Disconnect any suspect components, and then replay the tracks that were originally noisy. If the noise is gone, check the component's circuit and the component.

Special tools required
Diagnostics CD 07AAZ-SDBA100

Individual Speaker Test

Do this test to identify a faulty speaker.

1. Insert the audio diagnostic CD (T/N 07AAZ-SDBA100) into the audio unit.

2. Play track No. 30 (steady 300 Hz tone) at a normal, or slightly higher than normal, volume level.

3. Listen to each speaker for poor sound compared to the other channels. Use the audio unit's fader and balance settings to help isolate the channel with the problem.

   - If the sound quality produced by a specific speaker is poor, substitute it with a known-good speaker. If the poor sound quality continues, go to the sound balance test (see page 23-107).
   - If the sound quality is OK, go to the sound balance test (see page 23-107).

Special tools required
Diagnostics CD 07AAZ-SDBA100

Sound Balance Test

Do this test to identify a faulty channel or speaker.

1. Insert the audio diagnostic CD (T/N 07AAZ-SDBA100) into the audio unit.

2. Confirm the bass and treble are set to the center positions.

3. Play track No. 3 (pink noise) at a normal, or slightly higher than normal, volume level.

4. A static type sound should be heard through all speakers.

5. Insert the audio diagnostic CD (T/N 07AAZ-SDBA100) into the audio unit of a known-good vehicle.

6. Set the bass and treble to the center positions.

7. Play track No. 3 (pink noise) all the same level as was played in step 3.

8. Compare the sounds made by the two vehicles.

   - If the sound does not have as much bass, check the subwoofer and circuit.
   - If the sound does not have enough hiss, check the tweeters and their circuits.

Sound Quality Diagnosis (cont'd)

Special Tools Required
Diagnostics CD 07AAZ-SDBA100

Frequency Sweep

Do this test to find rattles or reverberations that may cause a perception of poor sound quality.

1. Insert the audio diagnostic CD (T/N 07AAZ-SDBA100) into the audio unit.

2. Play track No. 13 (sweep from 500 Hz to 35 Hz) at a normal, or slightly higher than normal, volume level.

3. Listen to each speaker for poor sound quality or reverberations caused by specific frequencies. Use the voice-over to estimate the frequency that causes the vibration. Use the audio unit's fader and balance settings to help isolate the channel with the problem.

   - If vibrations or poor sound quality are heard, go to step 4.
   - If no vibrations or poor sound quality are heard, go to sound judging (see page 23-108).

4. Choose the appropriate track from No. 14 to 25 (small range frequency sweep) or 26 to 53 (single frequencies) to recreate the frequency that caused the poor sound quality or vibration witnessed in step 3; this aids in diagnosis of the cause.

   NOTE: When you get to the track that recreates the problem, select the repeat function on the audio unit, this will help you isolate the cause.

5. Replace or insulate the source of the vibration or, if the speaker is the source of the poor sound quality, replace it.

Special tools required
Diagnostics CD 07AAZ-SDBA100

Sound Judging

Do this test to compare overall sound quality, imaging, and dynamics between the customer's vehicle and a known-good vehicle. Only use a vehicle of the same model and trim level for this test.

1. In the customer's vehicle, set the bass, treble, fader, and balance settings to the customer's normal settings that were written down before beginning the test.

2. Insert the audio diagnostic CD (T/N 07AAZ-SDBA100) into the audio unit.

3. Play tracks No. 7 to 12 (sound quality, midland, dynamics, and imaging demonstration tracks) at a normal, or slightly higher than normal, volume level. Write down the volume setting being used.

4. Listen to areas of the track that stand out as being either very clear or poorer than other areas of the track.

5. In a known-good vehicle, insert the audio diagnostic CD (T/N 07AAZ-SDBA100) into the audio unit.

6. Play the tracks at the same volume level and the same bass, treble, balance, and fader settings as used in step 3 in the customer's vehicle.

7. Listen to the same area of the track that stood out as being either very clear or poorer than other areas of the track.

8. Compare the customer's vehicle's sound quality results the known-good vehicle's results.
   - If the sound quality in the customer's vehicle is comparable to the sound quality in the known-good vehicle, then the customer's vehicle is operating as designed.
   - If the sound quality is not comparable, check these items in order.
     - Loose or improperly installed speakers or other hardware that may create interference from the vibrations generated by the speakers
     - Poor power or ground to the stereo amplifier
     - Damaged speaker(s)
     - Faulty amplifier
     - Faulty audio unit

Seek Stop Test

Do this test to check the performance of the audio unit's AM and FM reception. Refer to symptom troubleshooting: audio sound weak or distorted, or no sound is heard from speakers (display is normal) (see page 23-63) before continuing with this test.

NOTE:
- Window tint, aftermarket theft-recovery devices and other aftermarket devices may affect reception.
- Changes in cloud cover and other atmospheric conditions will affect the ability of the audio unit to receive radio signals.

1. Park the customer's vehicle in an open area away from buildings or other obstructions.
2. Park a known-good vehicle (same year, model, and trim level) next to the customer's vehicle, facing the same direction.
3. Start the engine in the customer's vehicle, and turn on the radio.
4. Set the FM receiver to 87.7 MHz.
5. Press the Seek + button, and record the first station that the audio unit locks onto.
6. Press the Seek + button repeatedly, and write down each station that the audio unit locks onto until the station recorded in step 5 is reached again.
7. Set the AM receiver to 530 kHz.
8. Press the Seek + button, and record the first station that the audio unit locks onto.
9. Press the Seek + button repeatedly, and write down each station that the audio unit locks onto until the station recorded in step 8 is reached again.
10. Turn the ignition switch to LOCK (0).
11. Start the engine in the known-good vehicle, and then do steps 4 thru 10 on the known-good vehicle.
12. Compare the number of stations received in steps 6 and 9 in the customer's vehicle with the number of stations received in the known-good vehicle.
    - If the number of stations received is the same, or within 10 %, the audio unit's tuner performance is OK. The problem may be atmospheric conditions, multi-path interference, or other obstructions to the radio signal.
    - If the customer's vehicle receives fewer stations by at least 10 %, go to step 2 of poor AM or FM radio reception or interference (see page 23-58).

Audio Unit Removal/Installation

With Navigation

SRS components are located in this area. Review the SRS component locations (see page 24-21), and the precautions and procedures (see page 24-23) before doing repairs or service.

NOTE:
- Put on gloves to protect your hands.
- Take care not to scratch the dashboard and related parts.
- Lay a workshop towel under the parts when working on them to protect the face panel from scratches or other damage.
- Eject all the disc before remove the audio unit to prevent damaging the CD player's load mechanism.
- If you are replacing the audio unit, write down the audio presets (if possible), then enter them into the new audio unit.

1. Make sure you have anti-theft codes for the audio system and the navigation system.
2. Remove the center console panel (see page 20-146) and the center pocket (see page 20-155).
3. Remove the audio disc changer (see page 23-113).
4. Remove the center pocket frame (see page 20-175).
5. Remove the driver's inner dashboard trim (see page 20-154), and passenger's dashboard trim (see page 20-160).
6. Remove the dashboard center vent (see page 20-164).
7. Remove the self tapping screws and bolts, then pull out the audio unit (A).

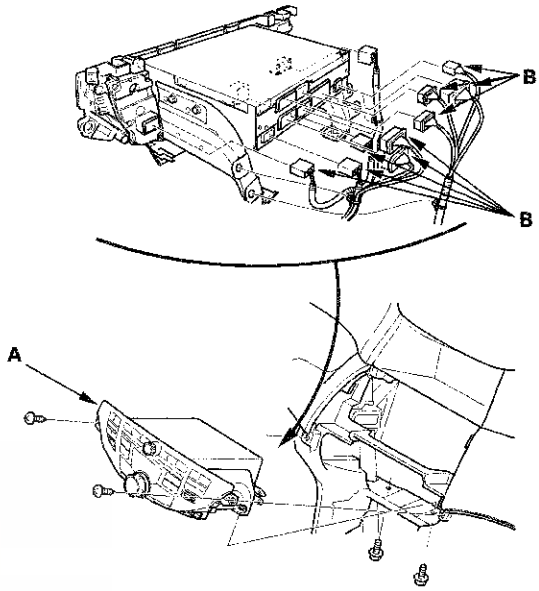

8. Disconnect the connectors (B), then remove the audio unit.
9. Remove the interface dial (see page 23-241).
10. Remove the audio switch panel (see page 23-112).
11. Install the audio unit in the reverse order of removal.
    - Make sure all the connectors and the antenna lead are secure.
    - Enter the anti-theft codes for the audio system and the navigation system.
    - Give the new anti-theft codes to the customer if you are replacing the navigation unit.

Without Navigation

SRS components are located in this area. Review the SRS component locations (see page 24-21), and the precautions and procedures (see page 24-23) before doing repairs or service.

NOTE:
- Put on gloves to protect your hands.
- Take care not to scratch the dashboard and related parts.
- Lay a shop towel under the parts when working on them to protect the face panel from scratches or other damage.
- Eject all the discs before remove the audio unit to prevent damaging the CD player's load mechanism.
- If you are replacing the audio unit, write down the audio presets (if possible), then enter them into the new audio unit.

1. Make sure you have anti-theft codes for the audio system.

2. Remove the center console panel (see page 20-146) and the dashboard center pocket (see page 20-155).

3. Remove the driver's inner dashboard trim (see page 20-154), and passenger's dashboard trim (see page 20-160).

4. Remove the self tapping screws and bolts, then pull out the audio unit (A).

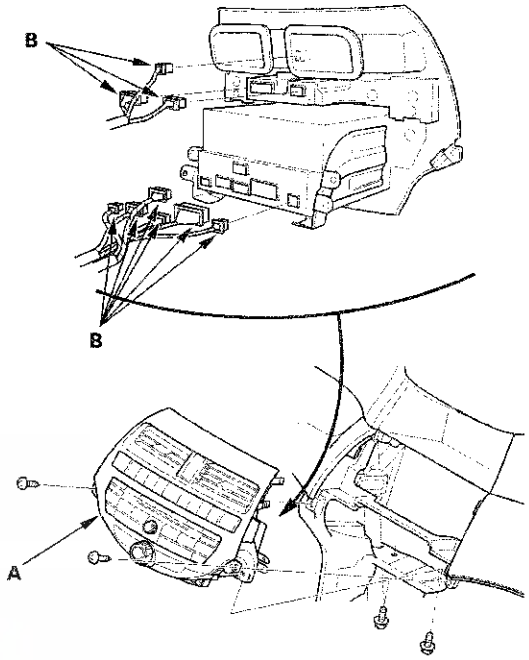

5. Disconnect the connectors (B), then remove the audio unit.

(cont'd)

Audio Unit Removal/Installation (cont'd)

6. Remove the climate control unit (see page 21-181).

7. Remove the mounting screws and bolts from the audio unit (A), then remove the audio unit from the audio switch panel (B).

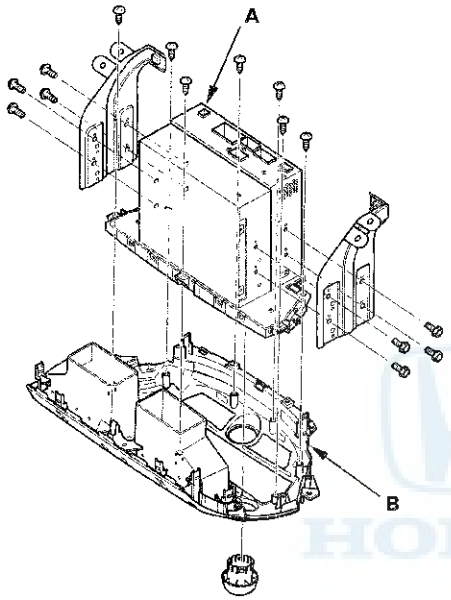

8. Install the audio unit in the reverse order of removal, and note these items:

   - Make sure all the connectors and the antenna lead are secure.
   - Enter the anti-theft codes for the audio system.
   - Set the clock.
   - Give the new anti-theft codes to the customer if you are replacing the audio unit.

Audio Switch Panel Removal/ Installation

With Navigation

NOTE:
- Put on gloves to protect your hands.
- Take care not to scratch the dashboard and related parts.
- Lay a workshop towel under the parts when working on them to protect the face panel from scratches or other damage.
- Do not work in a dusty or dirty place.
- Discharge static electricity from your body before and during the work.
- Do not touch the circuit board with your bare hands.
- Do not work with dirty hands.
- Be careful not no fold the flat plate cable.
- Do not touch the terminal connector of the flat plate cable with your bare hands. (If you have touched it, wipe it off thoroughly.)

1. Remove the audio unit (see page 23-110).

2. Remove the interface dial (see page 23-241).

3. Remove the mounting screws and bolts from the audio unit (A), then remove the audio unit from the audio switch panel (B).

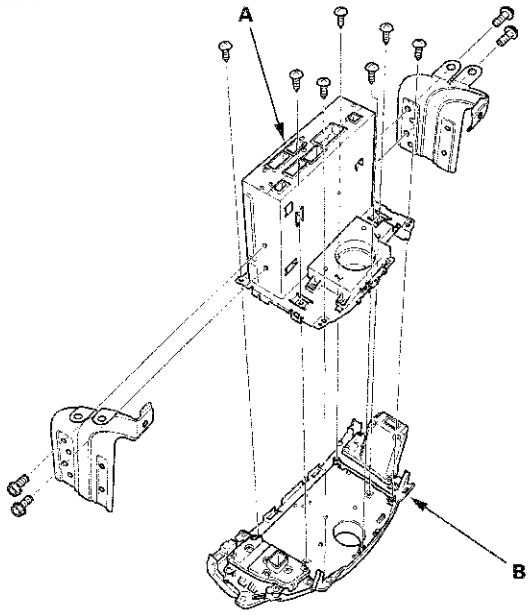

4. Install the audio switch panel in the reverse order of removal.

Without Navigation

NOTE:
- Put on gloves to protect your hands.
- Take care not to scratch the dashboard and related parts.
- Lay a shop towel under the parts when working on them to protect the face panel from scratches or other damage.
- Do not work in a dusty or dirty place.
- Discharge static electricity from your body before and during the work.
- Do not touch the circuit board with your bare hands.
- Do not work with dirty hands.
- Be careful not no fold the flat plate cable.
- Do not touch the terminal connector of the flat plate cable with your bare hands. (If you have touched it, wipe it off thoroughly.)

1. Remove the audio unit (see page 23-111), and the climate control unit (see page 21-181).

2. Remove the mounting screws and the audio unit (A) from the audio switch panel (B).

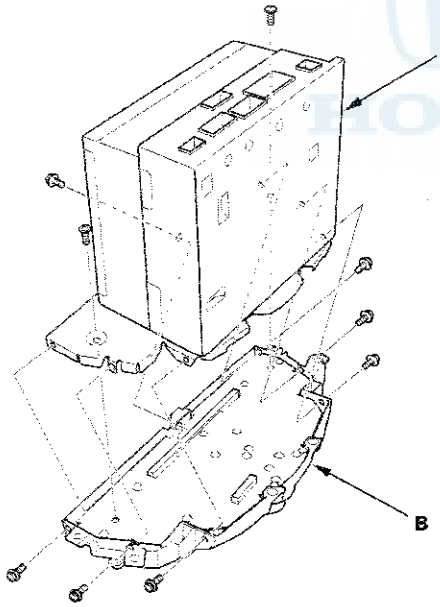

3. Install the audio switch panel in the reverse order of removal.

Audio Disc Changer Removal/ Installation

With Navigation

NOTE:
- Put on gloves to protect your hands.
- Take care not to scratch the dashboard and related parts.
- Lay a shop towel under the parts when working on them to protect the face panel from scratches or other damage.
- Eject all the discs before remove the audio disc changer unit to prevent damaging the audio disc changer load mechanism.

1. Remove the center console panel (see page 20-146) and the dashboard center pocket (see page 20-155).

2. Remove the bolts, then pull out the audio disc changer unit (A).

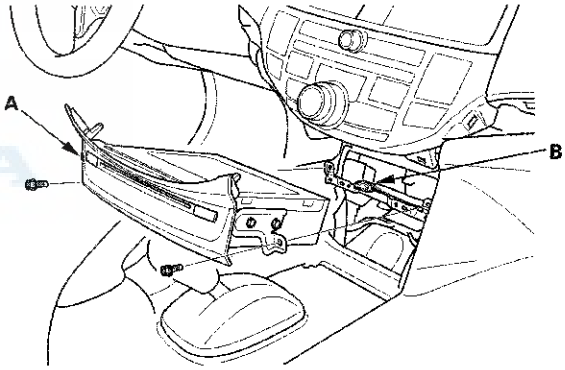

3. Disconnect the connector (B), then remove the audio disc changer unit.

4. Install the audio disc changer unit in the reverse order of removal.

Audio-HVAC Subdisplay Unit Removal/Installation

With Navigation

NOTE:
- Put on gloves to protect your hands.
- Take care not to scratch the dashboard.

1. Remove the dashboard center vent (see page 20-164).
2. Remove the screws, then pull out the audio-HVAC subdisplay unit (A).

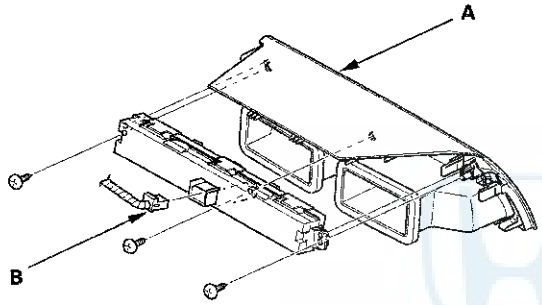

3. Disconnect the connector (B), and remove the audio-HVAC subdisplay unit.
4. Install the audio-HVAC subdisplay unit in the reverse order of removal.

Audio-HVAC Display Unit Removal/Installation

Without Navigation

NOTE:
- Put on gloves to protect your hands.
- Take care not to scratch the dashboard.

1. Remove the audio unit (see page 23-110) and the center display visor (see page 20-158).
2. Remove the screws and bolts, then pull out the audio-HVAC display unit (A).

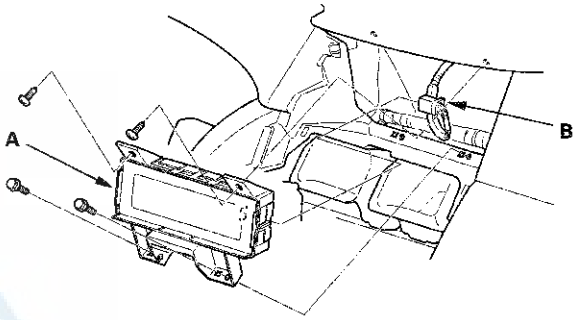

3. Disconnect the connector (B), and remove the audio-HVAC display unit.
4. Install the audio-HVAC display unit in the reverse order of removal.

Stereo Amplifier Removal/ Installation

With Premium Audio System

1. Remove the glove box (see page 20-161).

2. Disconnect the connectors (A).

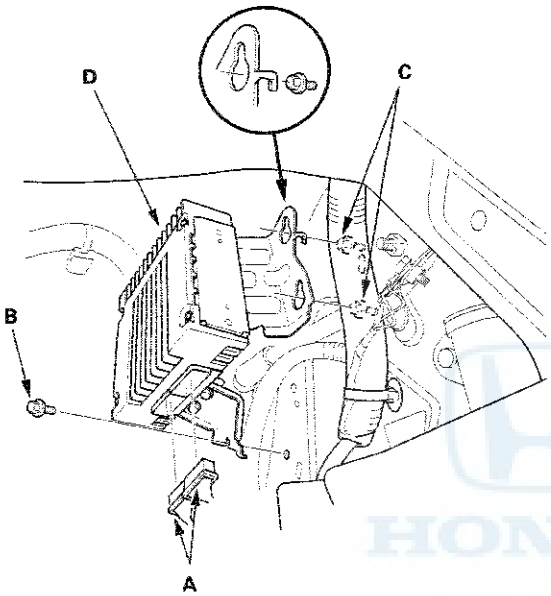

3. Remove the bolt (B) and loosen the bolts (C) securing the stereo amplifier (D).

4. Lower the stereo amplifier through the footwell area.

5. Install the stereo amplifier in the reverse order of removal.

XM Receiver Removal/Installation

1. Open the trunk lid, and remove the right trunk side trim panel (see page 20-123).

2. Disconnect the connectors (A) from the XM receiver (B).

4-Door

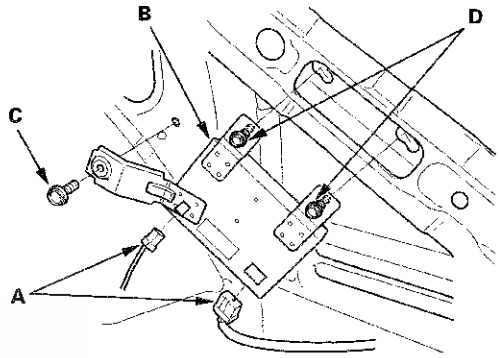

2-Door

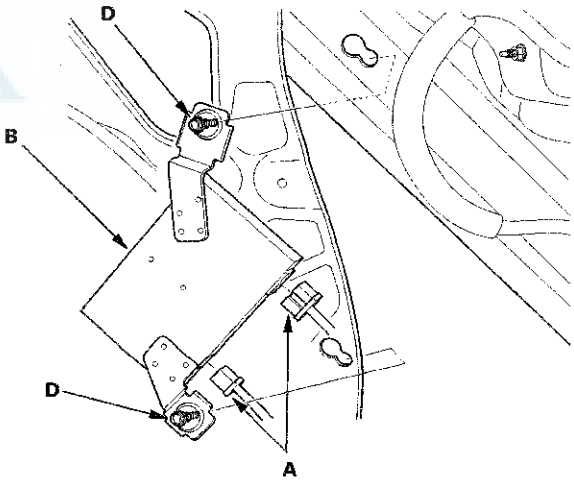

3. Remove the mounting bolt (C) and loosen the mounting bolts (D), then remove the XM receiver.

4. Install the XM receiver in the reverse order of removal.

Active Noise Cancellation Microphone Removal/Installation

Front

1. Remove the roof console (see page 20-131).
2. Disconnect the connector (A), then remove the screws and the active noise cancellation microphone (B).

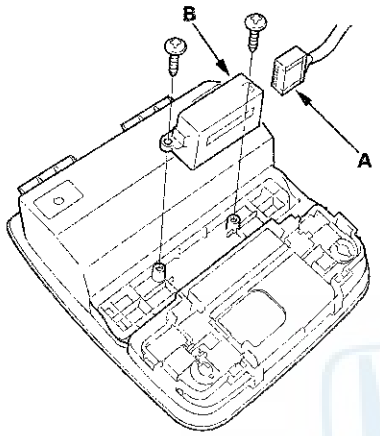

3. Install the microphone in the reverse order of removal.

Rear

1. Remove the rear shelf (see page 20-119).
2. Disconnect the connector (A), then remove the screws and the active noise cancellation microphone (B).

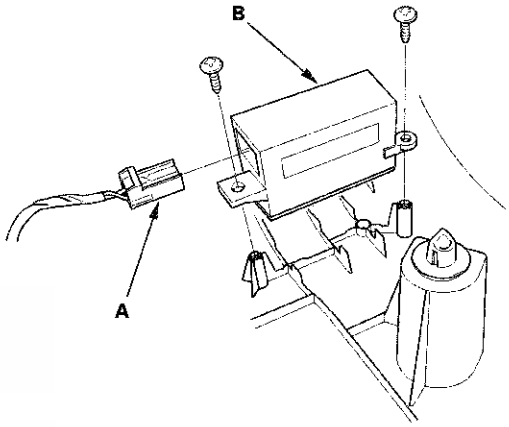

3. Install the microphone in the reverse order of removal.

Crossover Network Control Unit Removal/Installation

Driver's Door Speaker Crossover Network Control Unit

1. Remove the driver's dashboard lower cover (see page 20-153).

2. Disconnect the connector (A), then remove the driver's door speaker crossover network control unit (B).

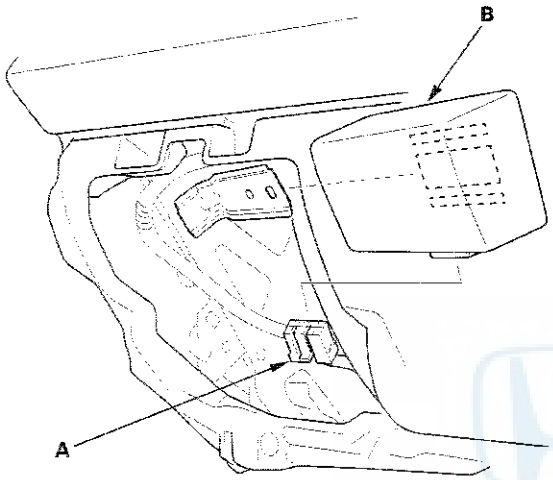

3. Install the driver's door speaker crossover network control unit in the reverse order of removal.

Front Passenger's Door Speaker Crossover Network Control Unit

1. Remove the center console panel (see page 20-146), then remove the audio pocket (see page 20-155).

2. Disconnect the connector (A), then remove the passenger's door speaker crossover network control unit (B).

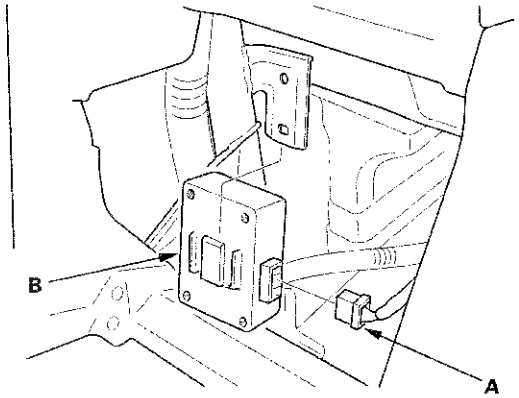

3. Install the passenger's door speaker crossover network control unit in the reverse order of removal.

Speaker Test/Replacement

Front Door Speaker

1. Remove the door panel.
   - 4-door (see page 20-16)
   - 2-door (see page 20-12)
2. Remove the bolt. Then lift the speaker straight up to release the lower clips (A).

   NOTICE
   If you pull the speaker out too far from the door, you will damage the lower clips.

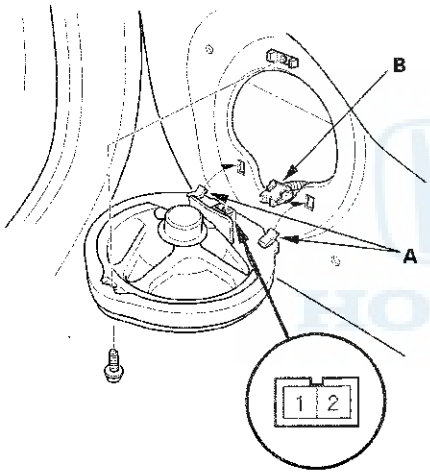

3. Disconnect the 2P connector (B), and remove the speaker.
4. Measure the resistance between the terminals No. 1 and No. 2. There should be about 4 Ω.
5. If the resistance is not as specified, replace the door speaker.

Front Door Tweeter (With Premium Audio System)

1. Detach the clip (A) and remove the front door tweeter cover (B). Then disconnect the connector (C).

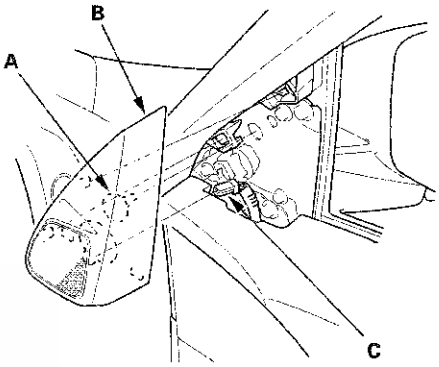

2. Measure the resistance between the front door tweeter 2P connector terminals No. 1 and No. 2. There should be about 3.3 Ω.

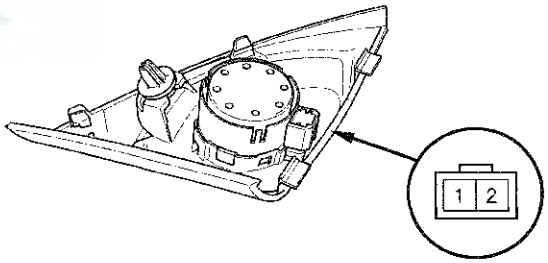

3. If the resistance is not as specified, replace the front door tweeter. Remove the front door tweeter (A) from front door tweeter cover (B).

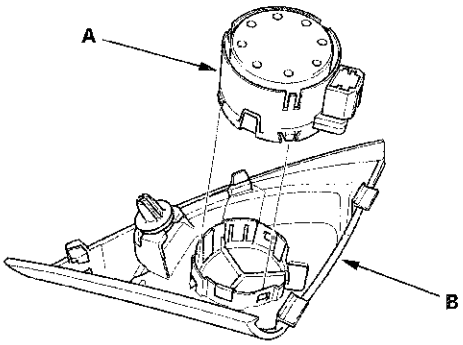

Front Door Tweeter (Without Premium Audio System)

1. Detach the clip (A) and remove the front door tweeter cover (B). Then disconnect the connector (C).

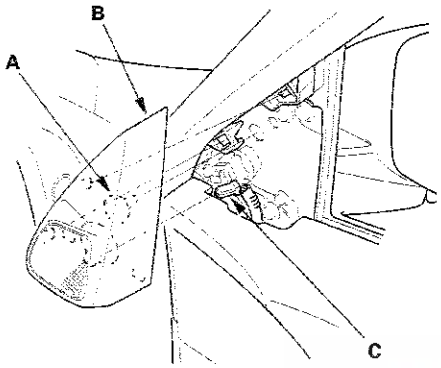

2. Check the capacitor condition. If any malfunction is found, replace the front door tweeter.

3. Measure the resistance between the front door tweeter (A) terminal No. 2 and the outside terminal of the capacitor. There should be about 4 Ω.

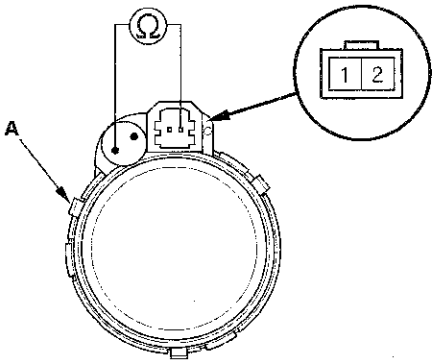

4. If the resistance is not as specified, replace the front door tweeter.

5. Remove the front door tweeter (A) from the front tweeter cover (B).

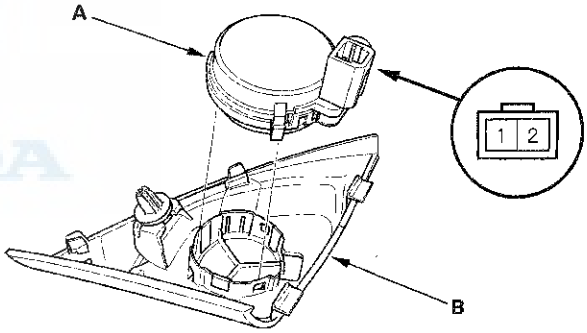

(cont'd)

Speaker Test/Replacement (cont'd)

Rear Speaker

1. Remove the rear shelf (see page 20-119).
2. Remove the mounting bolt, then tilt the speaker forward to release the front clips (A).

NOTICE
If you pull the speaker out too far from the rear bulkhead, you will damage the lower clips.

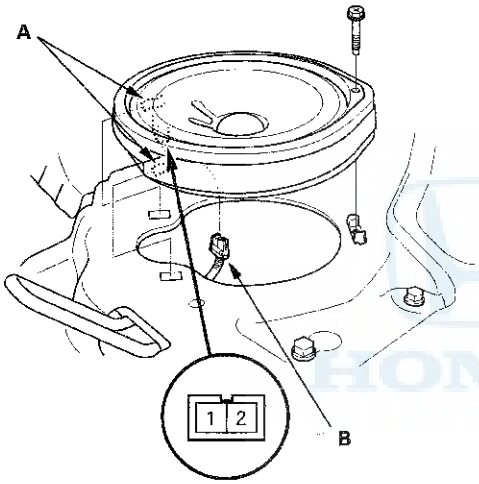

3. Disconnect the 2P connector (B), and remove the rear speaker.
4. Measure the resistance between the terminals No. 1 and No. 2. There should be about 4 Ω.
5. If the resistance is not as specified, replace the rear speaker.

Subwoofer

1. Remove the rear shelf (see page 20-119).
2. Remove the four mounting bolts from the subwoofer (A).

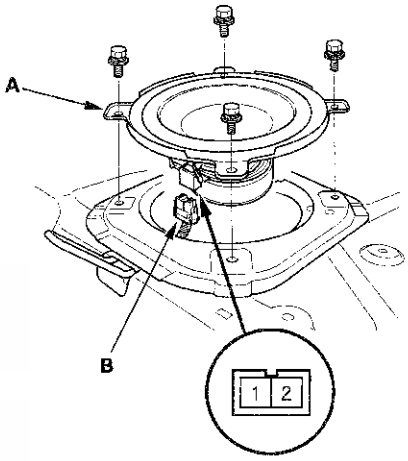

3. Disconnect the 2P connector (B), and remove the subwoofer.
4. Measure the resistance between the terminals No. 1 and No. 2. There should be about 2 Ω.
5. If the resistance is not as specified, replace the subwoofer.

Audio Remote Switch Test

1. Remove the steering wheel (see page 17-24).

2. Remove the audio remote switch (see page 17-25).

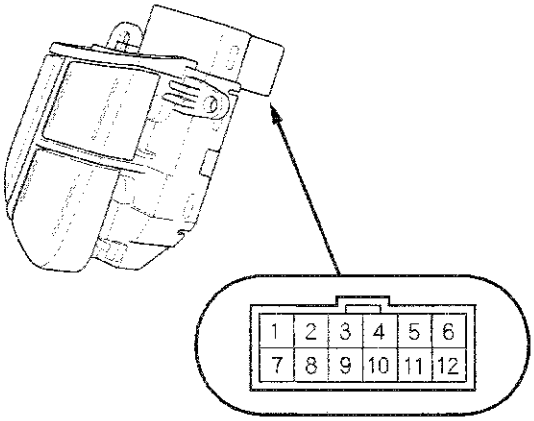

3. Measure the resistance between the terminals No. 7 and No. 9 in each switch position according to the table.

Button held down	Resistance
No button pressed	About 10 kΩ
MODE	About 3.7 kΩ
CH (+)	About 1.7 kΩ
CH (−)	About 775 Ω
▲ (VOL.UP)	About 357 Ω
▼ (VOL.DOWN)	About 100 Ω

4. If the resistance is not as specified, replace the audio remote switch.

AM/FM Antenna Amplifier Replacement

1. Remove the C-pillar trim.

   - 4-door (see page 20-115)
   - 2-door (see page 20-110)

2. Disconnect the connectors (A) from the AM/FM antenna amplifier (B).

4-Door

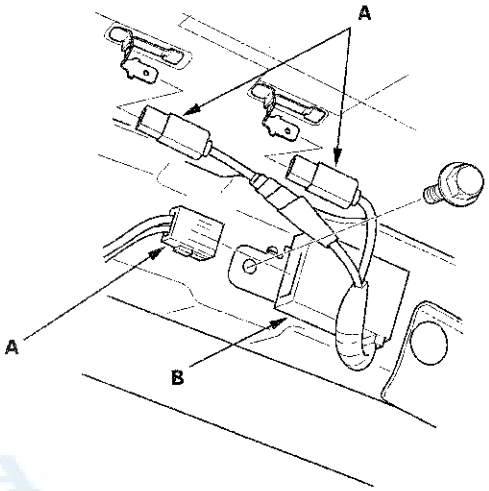

2-Door

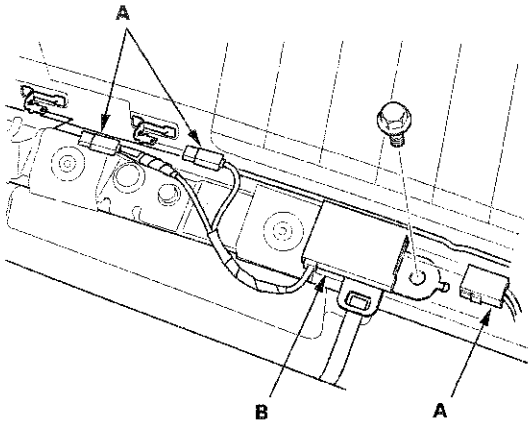

3. Remove the bolt and the AM/FM antenna amplifier.

4. Install the unit in the reverse order of removal.

AM/FM Antenna Repair

NOTE: To make an effective repair, the broken section must be no longer than one inch.

1. Lightly rub the area around the broken section (A) with fine steel wool, then clean it with isopropyl alcohol.

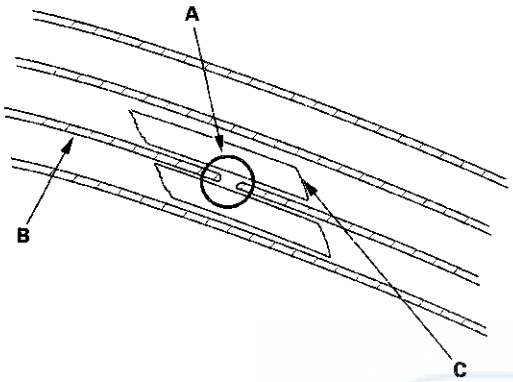

2. Carefully mask above and below the broken portion of the window antenna wire (B) with cellophane tape (C).

3. Mix the silver conductive paint thoroughly. Using a small brush, apply a heavy coat of paint (A) extending about 1/8" on both sides of the break. Allow 30 minutes to dry.

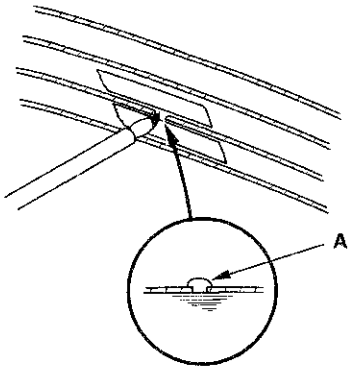

4. Check for continuity in the repaired wire.

5. Apply a second coat of paint in the same way. Let it dry 3 hours before removing the tape.

XM Antenna Replacement

1. Remove the headliner (see page 20-131).

2. Remove the nut (A) from the XM antenna (B).

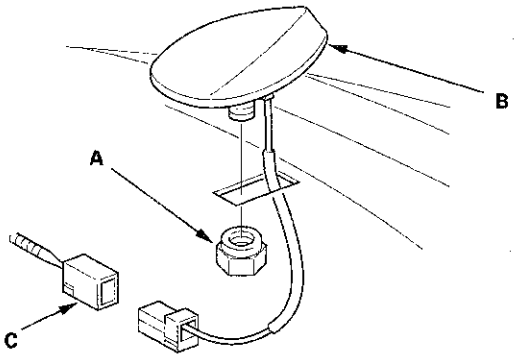

3. Disconnect the connector (C) and remove the XM antenna.

4. Install the XM antenna in the reverse order of removal.

Auxiliary Jack Assembly Replacement

1. Remove the center console (see page 20-148).

2. Disconnect the 5P connector (A), and carefully pull out the auxiliary jack assembly (B) from the center console box.

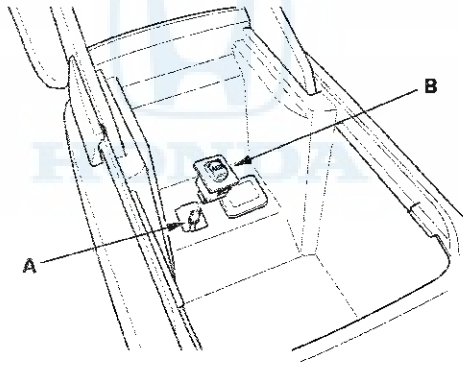

3. Install the auxiliary jack assembly in the reverse order of removal.

Component Location Index

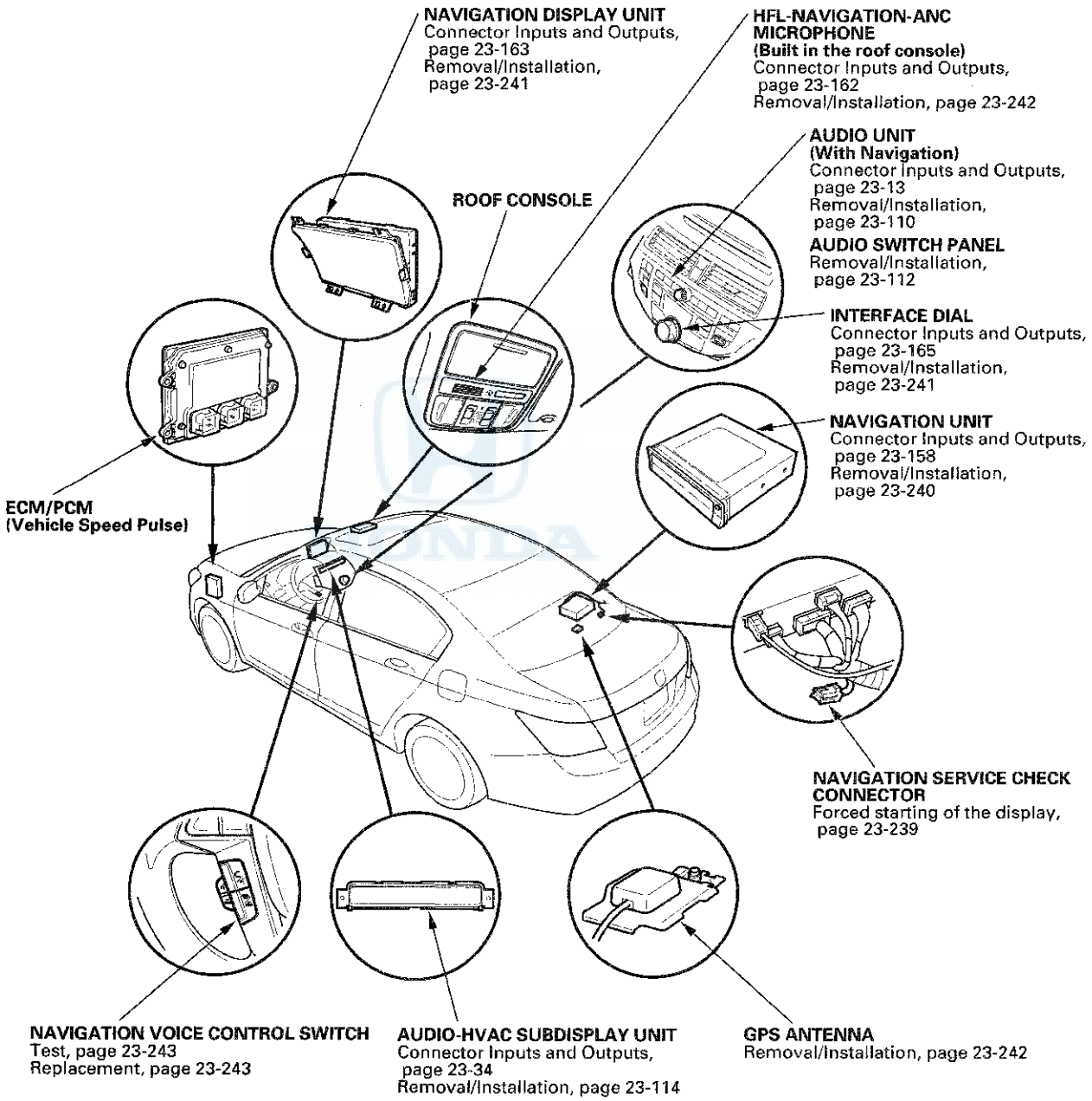

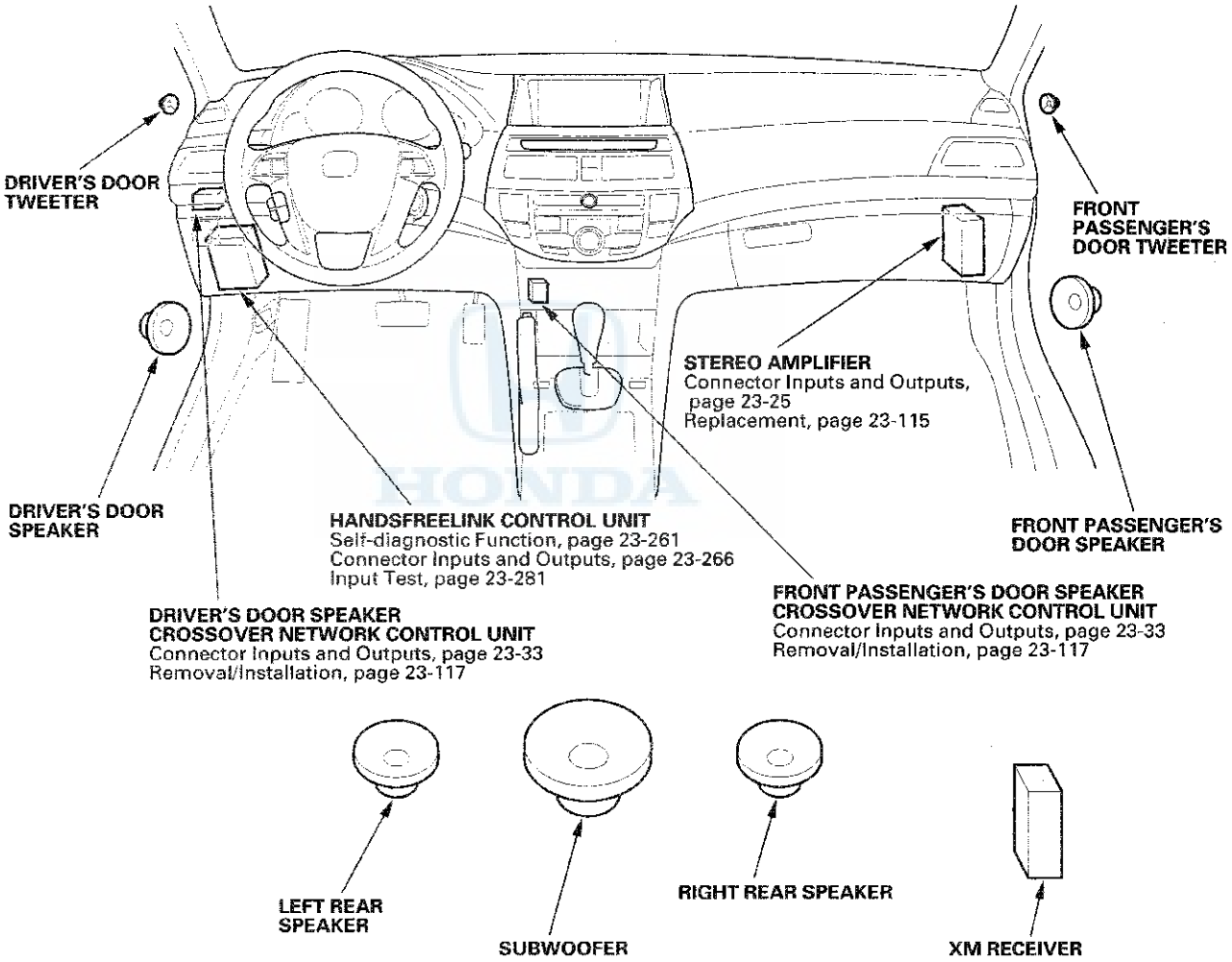
DRIVER'S DOOR TWEETER
FRONT PASSENGER'S DOOR TWEETER
STEREO AMPLIFIER
Connector Inputs and Outputs, page 23-25
Replacement, page 23-115
DRIVER'S DOOR SPEAKER
HANDSFREELINK CONTROL UNIT
Self-diagnostic Function, page 23-261
Connector Inputs and Outputs, page 23-266
Input Test, page 23-281
FRONT PASSENGER'S DOOR SPEAKER
DRIVER'S DOOR SPEAKER CROSSOVER NETWORK CONTROL UNIT
Connector Inputs and Outputs, page 23-33
Removal/Installation, page 23-117
FRONT PASSENGER'S DOOR SPEAKER CROSSOVER NETWORK CONTROL UNIT
Connector Inputs and Outputs, page 23-33
Removal/Installation, page 23-117
LEFT REAR SPEAKER
SUBWOOFER
RIGHT REAR SPEAKER
XM RECEIVER

General Troubleshooting Information

General Operation

Refer to the navigation system manual for the navigation system operating procedures.

Anti-theft Feature

The navigation system and audio unit have a coded theft protection circuit. Make sure you have the anti-theft security code before:

- Disconnecting the battery.
- Disconnecting the navigation unit 8P connector.
- Removing the No. 15 (10 A) fuse from the under-hood fuse/relay box.

After service, reconnect power to the navigation unit, and turn the ignition switch to ON (II). Enter the 4-digit anti-theft security code, then select Done.

If the code cannot be found, use the interactive Network (iN) to look it up. You can view the serial number in one of the ECU Info diagnostic screens (see page 23-170). Alternatively, you can find the serial number on the underside label which is located on the navigation unit in the trunk.

When replacing the navigation unit, be sure to give the customer the new anti-theft security code.

Symptom Diagnosis

Certain circumstances and system limitations will result in occasional vehicle positioning errors. Some customer's may think this indicates a problem with the navigation system when, in fact, the system is normal. Keep the following items in mind when interviewing customer's about symptoms of the navigation system.

Self-Inertial Navigation Limitations

The limitations of the self-inertial portion of the navigation system (the yaw rate sensor and the vehicle speed signal) can cause discrepancies between the vehicle's actual position and the indicated vehicle's position (GPS vehicle position).

The following circumstances may cause vehicle positioning errors:

- Moving the vehicle with the engine stopped and the vehicle stopped, such as by ferry or tow truck, or if the vehicle is spun on a turn table.
- Tire slippage, changes in tire rolling diameters, and some driving situations may cause discrepancies in travel distances. Examples of this include:
  - Continuous tire slippage on a slippery surface
  - Driving with snow chains mounted
  - Abnormal tire pressure
  - Incorrect tire size
  - Frequent lane changes across a wide highway
  - Continuous driving on a straight or gently curving highway
  - Very bumpy roads
- Tolerances in the system and map inaccuracies sometimes limit how precisely the vehicle's position is indicated. Examples of this include:
  - Driving on roads not shown on the map (map matching is not possible)
  - Driving on a road that winds in one direction, such as a loop bridge, an interchange, or a spiral parking garage
  - Driving on a road with a series of sharp hair-pin turns
  - Driving near a gradual highway exit or transition
  - Driving on one of two close parallel roads
  - Making many 90 degree turns

Global Positioning System (GPS) Limitations

The GPS cannot detect the vehicle's position or elevation during the following instances:

- For the first 5 to 10 minutes after reconnecting the battery (this process can take as long as 45 minutes).
- When the satellite signals are blocked by tall buildings, mountains, tunnels, large trees, inside parking structures or large trucks.
- When the GPS antenna is blocked by metallic window tinting or by an object placed above it in the vehicle. The GPS antenna requires a clear unobstructed view of the sky.
- When there is no satellite signal output (signal output is sometimes stopped for satellite servicing).
- When the satellite signals are blocked by the operation of some electronic aftermarket accessories including, but not limited to non-OEM in-dash entertainment units (radio, CD players/changers, radar detectors and theft recovery systems) and cell phones placed near the navigation system.

The accuracy of the GPS is reduced during these instances:

- Metallic window tinting above the GPS antenna.
- When only three or less satellite signals are received (Four satellite signals are required for accurate positioning).
- When driving near high tension power lines.
- When the satellite control centers are experiencing problems.

Muting Logic

Whenever the navigation system is giving guidance, the front speakers are muted. When the voice control system is being used, all of the speakers are muted. If the HandsFreeLink is in use, the voice control system is unavailable and a message appears onscreen.

LCD Display Unit Limitations

NOTE: The screen is not touch sensitive. Use the interface dial and buttons to select items on the screen.

- In cold temperatures, the display may stay dark for the first 2 or 3 minutes until it warms up.
- When the display is too hot because of direct summer sunlight, it will remain dark until the temperature drops (you may see an error message displayed stating this fact).
- When the humidity is high and the interior temperature is low, the display may appear cloudy. The display will clear up after some use.
- Fingerprints on the screen may be noticeable. Clean the screen with a soft, damp cloth. You may use a mild cleaner intended for eye glasses or computer screens. To avoid scratching the panel, do not rub too hard or use abrasive cleaners or shop towels.

Symptom Duplication

- When the symptom can be duplicated, verify that it is not a characteristic of the system. Review the navigation system manual and compare it to a known-good vehicle (with the same software and database), under the same conditions. If the symptom is not the same as the known-good vehicle, follow the self-diagnostic procedures and the appropriate troubleshooting procedures.
- When the symptom does not reappear or only reappears intermittently, ask the customer about the conditions when the symptom occurred.
  - Always ask the customer to demonstrate the problem.
  - Try to establish possible user error or misunderstanding of the system.
  - Try to establish if outside interference may have been the cause.
  - Try to duplication the symptom under the same conditions the customer experienced.
  - Vibration, temperature extremes, and moisture (dew, humidity) are factors that are difficult to duplicate.
  - Inspect the vehicle for after-market electronic devices (vehicle locators, amps, radar detectors, etc.) that may be hidden.

NOTICE

When troubleshooting navigation system problems, ensure that the known-good vehicle is the same software version year and model as the vehicle being serviced. Mixing incompatible navigation DVDs or other system components can delay the troubleshooting process by creating symptoms or issues causing effects unrelated to the original problem.

(cont'd)

General Troubleshooting Information (cont'd)

Service Precautions

- If you need to replace the navigation unit, you can back-up the navigation data and transfer it to a new navigation unit. See Save users memory (see page 23-183).
- When the battery is disconnected, the internal GPS clock resets is reset to 0:00. The clock resets to the correct time after the system finishes GPS initialization.
- Before disconnecting the battery, make sure you have the anti-theft codes for the audio system and the navigation system, and write down the audio presets. Also obtain any PGM-FI or transmission DTCs and freeze frame date (which are lost when the ECM/PCM loses power).
- After reconnecting the battery, you have to wait to get the initial signal from the satellite. It will take from 10 to 45 minutes.
- Adjust the setup clock settings (time zone and daylight savings) in the navigation system.
- Before returning the vehicle to the customer, enter the anti-theft codes for the audio system and the navigation system.

System Initialization

If the navigation system loses power (like the battery was disconnected), the navigation system requires initialization. Once completed, your system is ready to use.

This initialization requires the following:

- Entering the 4-digit anti-theft security code to unlock the system
- GPS initialization (may not be needed depending of the length of time the system was without power)
- Map matching to align the GPS to a location on the map

Entering the Security Code

Any time the navigation system loses power, you need to enter the 4-digit anti-theft code on the navigation system display. This 4-digit code is located on a small code card that was given to the customer. Enter the 4-digit code, then select Done.

If the navigation system anti-theft code is missing use the interactive Network (iN) to look it up. You need the serial number for the navigation unit to do this.
You can view the serial number by entering the diagnostic mode. Select Unit Check from the main menu, then the ECU info diagnostic screen. This gives you the serial number without removing the navigation unit.

The iN may display more than one code for a given serial number. This is because serial numbers are not unique. You may have to try more than one 4-digit code. If no code is shown, or if the code(s) given do not work in the navigation unit, contact the Automobile Warranty department. If the code 0000 works, replace the navigation unit.

When replacing the navigation unit or audio unit, make sure you give the customer the new anti-theft security code.

GPS Initialization

NOTE: You must park the vehicle outside with a clear view of the southern sky.

Depending on the length of time the battery was disconnected, your system may require GPS initialization. If it does, the following screen appears:

> **The navigation system lost power and is acquiring its location from the GPS satellites. This usually takes less than 10 minutes.**
>
> *** Start the engine.**
> *** Park the vehicle in an open area away from trees, power lines, and tall buildings.**
> *** Remove loose articles, cell phones, or electrical accessories located near the GPS antenna.**
> *** If this screen is displayed repeatedly when starting the vehicle, see your dealer.**

If this procedure is not necessary, the system proceeds directly to the Disclaimer screen. During initialization, the system searches for all available GPS satellites, and obtains their orbital information. During this procedure the vehicle should be out in the open with a clear view of the sky.

If the navigation system finds the satellites properly, this box clears, and changes to the Disclaimer screen. If within 10 minutes the system fails to locate a sufficient number of satellites to locate your position, the following screen appears.

> **Something is interfering with the system's ability to acquire its location. Check the following:**
> *** The vehicle must be in an open area with a clear view of the sky.**
> *** Remove sources of GPS interference like metallic window tint above antenna, or electrical items near antenna(see owner's manual for details).**
> *** Check GPS antenna cable connection.**
> *** Restart the engine and repeat the GPS acquire procedure. If the problem persists, see your dealer.**

It this screen appears, turn off the engine, then restart the vehicle and move it to a different location. If the disclaimer screen appears, the GPS initialization is complete.

NOTE:
- The average acquiring time is less than 10 minutes, but it can take as long as 45 minutes.
- If the system is still unable to acquire a signal, follow the instructions on the screen. If this screen appears again, go to troubleshooting for the GPS icon is white or not shown (see page 23-226).
- Skip to a CSF screen by pushing the MENU + INFO buttons at the same time and can move to an System Links screen.

Map Matching

This part of the initialization matches the GPS coordinates with a road on the map screen. To do this part of the procedure, make sure that the navigation system displays a map, and drive the vehicle on a mapped road shown on the map screen. Do not enter a destination at this time. When the name of the current road you are driving on, appears at the bottom of the screen, the entire procedure is complete. Your system is now ready to use.

Obtaining A Navigation DVD

If the Navigation DVD is lost or damaged, or you need a yearly updated DVD, you have two ways to purchase one. You can either call (888) 291-4675, or order online at www.hondanavi.com.

Both methods require a credit card. The DVD for this model has a white label, and cannot be ordered through the parts system. The following DVDs will not work in this navigation system:

- Earlier model navigation DVDs (black, orange, light blue label and the older versions with a white label)
- Map software programs manufactured by other companies
- DVD movies, or DVDs containing audio recordings

Update DVDs are available for purchase usually in the fall of each year. They may contain the following:

- Enhanced maps and points of interest (POI) coverage
- Fixes for minor software bugs
- Additional features

NOTE:
- Map matching must be done any time the DVD is removed or replaced.
- Always order navigation DVDs on an as-needed basis. During a typical model year, each color DVD may undergo a half a dozen software only version upgrades to fix minor issues on some or all models the DVD supports. This is normal. Usually only the letter at the end of the version number changes, while the database (maps and POIs) remain unchanged.
- Never promise your customer future free updates. There are no free programs for updating the navigation DVD. Update DVDs are generally available for purchase each fall. The online DVD order site provides information when an update for a particular color DVD is available.
- Damaged discs are not covered by warranty unless they have been damaged by the navigation system.

(cont'd)

General Troubleshooting Information (cont'd)

DVD Handing and Cleaning

To avoid damaging or leaving fingerprints on the DVD, always handle it by the edges and place it in a jewel case whenever it is outside the navigation unit. Deep scratches or fingerprints on the back of the DVD can cause intermittent rebooting or other system errors.

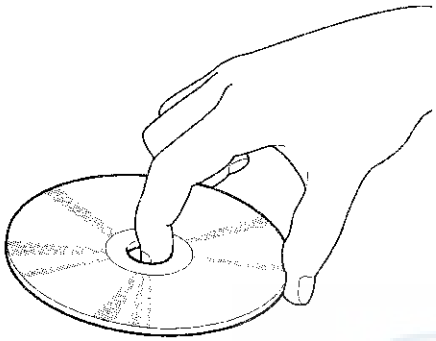

Smudges and fingerprints can be carefully removed using a mild cleaner and tissues designed to clean eyeglasses. To clean a DVD, use a clean soft cloth. Very gently wipe across the DVD from the center to the outside edge, never in a circular motion.

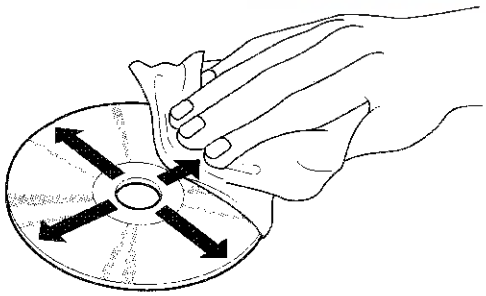

Do not place stabilizer rings or labels on the DVD.

Earliest DVD Version Application for Each Model

Each navigation system DVD contains a map/POI (point of interest) database and the navigation system software for each model that it supports. Inserting an older DVD can cause problems since it lacks the software to provide the specific features needed for that model. Unfortunately, the navigation software does not detect or warn you that the version is outdated, and it may even appear to operate.

NOTE: Replacing a DVD just because the version number is higher is not always warranted. A higher software version does not necessarily mean it contains newer software for your model. The DVD contains software for all models that use the same color DVD, and a revised number may or may not have software fixes or upgrades for the model in question.

Typical warning symptoms that an outdated DVD is being used include:

- The Honda model navigation screen displays a Acura logo while booting up.
- A newly introduced model feature or current accessory may not display properly, and Extension displays instead.

  NOTE: Extension may be displayed when using Music Link, but should never be displayed when XM is selected.

- The current street (the street being driven on) does not appear properly at the bottom of the map screen display when the vehicle is driven on a main road.

  NOTE: If necessary, compare the operation to the navigation system of the same model and year vehicle that has a current DVD.

How to Identify Navigation DVD Versions, and How to Inspect A DVD for Damage

To determine the navigation version on a particular model, start the engine, then locate the navigation unit. Open the DVD door, and push the eject button to eject the DVD. Hold the DVD by the edges, and check for these items:

- Check any official Honda service website for more service information about the navigation DVDs.
- The DVD label color.
- Read the DVD version on the label, and note it on the repair order. The version number is near the bottom of the label text (for example, ver: 4.23A). You will need this version number:
  - To verify that the DVD version is appropriate for the vehicle. Check any official Honda service website for more service information.
  - Any time you call Tech Line regarding a navigation system issue.
  - To answer customer inquires concerning update or coverage issue.

    NOTE: Customers may obtain DVDs from sources outside the normal ordering process. If you determine this is the case, recommend that your customer purchase the appropriate DVD from the Honda Disc Fulfillment Center (see ORDERING A DVD).

  - Check the underside of the DVD for signs of mishandling. Deep scratches, or random scratches, light swirl marks, or fingerprints can cause random lock-ups, reboots, erratic voice response, erratic positioning errors, and DVD read or format errors.

    NOTE: A damaged DVD is not covered under warranty unless the disc is damaged by the navigation unit. Damage by the navigation unit typically appears as circular scratches caused by something rubbing against the DVD as it spins. The damage may appear as arcs or complete circles on the DVD reading surface.

  - Verify that the underside of the DVD is silver, and not a copy with a blue color. Copies will not work properly and can cause other symptoms that mimic hardware problems.

- Incorrectly colored DVDs being put into navigation vehicles. This causes the system to either display error messages, or causes system malfunctions that mimic a hardware problem. This results in the customer leaving with a malfunctioning navigation system.
- The DVD version provided to the customer is out-of date or incompatible with a particular model. This inconveniences your customer by delaying the repair, or by causing additional (and unnecessary) returns to your dealership.
- The customer experiences bugs or other issues that have already been resolved in later versions currently available at the fulfillment desk.

If the DVD is defective, or has any of the issues mentioned above, return the vehicle to your customer and recommend that they order the proper DVD from the Honda Disc Fulfillment Center.

NOTE: If it is determined that the navigation unit is defective (through the appropriate service manual troubleshooting procedures) and the DVD will not eject, order a replacement navigation unit, and also order a DVD from the Honda Disc Fulfillment Center.

Navigation DVDs do not come with replacement navigation units. If you are replacing a navigation unit because it is defective (following appropriate service manual troubleshooting), and the DVD does not eject, order a DVD from the Disc Fulfillment Center.

(cont'd)

General Troubleshooting Information (cont'd)

How to Answer Customer Questions About Navigation Coverage

Some customers may ask questions regarding a city, address, or POI (point of interest) covered by the navigation system. It is better to verify a coverage question on an actual vehicle than to disappoint your customer by promising coverage that may be incomplete or missing in their area. The following suggestions can be used to answer coverage inquiries from your customer.

Is my address covered by the navigation system?

Using a current production vehicle (of the same model), try and enter the customer's address (street first) to see if their area is covered. Always enter the street first, because sometimes their city may be included in a neighboring township, or under some larger metropolitan city name. If the address is shown in a vehicle, you might recommend that your customer purchase an update.

Is my city covered by the navigation system?

For general questions about whether a city is covered, view the map coverage link on the DVD order site. On the site, select a year, and select a model, then click on the Coverage link. You then select a state or province, and the cities are listed. Of course, this does not guarantee that the customer's road or address is in the system. Verifying on an actual production vehicle is always the best guarantee that your information is accurate.

The gas station on my corner is now a restaurant. Why is it still incorrect in the navigation system?

For POI-related client questions, explain that businesses are constantly moving, and there can be a considerable lag in updating the millions of POIs in the system. The database is updated annually, and the best way to the verify whether the POI is accurate is verify the inquiry on a current production vehicle.

Answers to these and other questions regarding coverage can be found in these locations:

- In the Frequently Asked Questions section of the navigation system manual.
- At the online DVD order site, by clicking on the FAQs link.

How do I find the local address of a business that is part of a national chain (for example, Starbucks)?

There are three ways to find the local address to businesses:

- If you know the phone number of the business, select Phone Number and enter the 10 digit phone number (area code plus seven digit number).
- Select Category, then Restaurant. Enter the keyword Star. The resulting list includes all restaurants that have the letters Star anywhere in the name.
- Select Name and enter Starbucks. For more common business names, like McDonalds, you may have to search through a list that includes other businesses like McDonalds Welding, McDonalds Automotive, etc.

Why are some features different or missing compared to my previous Acura vehicle?

Hardware and software continually go through updates and improvements. Features may change or disappear over time based on the navigation system development.

Precaution on Customer "Sneak Previews"

Your customer might request a look (or sneak preview) at features in the latest navigation software. You should never preview a navigation DVD in a customer's vehicle. Inserting a newer DVD installs the latest software from the DVD into the memory of the customer's navigation system. When the original DVD is reinstalled, the newer software remains in memory and is often incompatible with the customer's original DVD Map and POI database, or software.

If your customer wishes to see the latest navigation coverage or software features, demonstrate it on an in-stock vehicle that already has the latest DVD version.

If, a newer version is loaded either by the dealer or the customer, the only remedy is to enter the navigation diagnostic mode's Version screen and do a forced download. Check any official Honda service website for more information about what patches may need reinstalling.

How to Check Error History

The Error History feature is to record intermittent navigation issues that occur while using the system. Sometimes the customer complaint cannot be duplicated. The error history may record the information needed to diagnose the problem. To check the error history:

1. Start the engine.

2. Press and hold the MAP/GUIDE+MENU+CANCEL buttons for 3 seconds, or connect the SCS service connector to the navigation service connector located in the trunk (see page 23-239).

3. When the Select Diagnosis Items menu is displayed, select Detail Information & Setting.

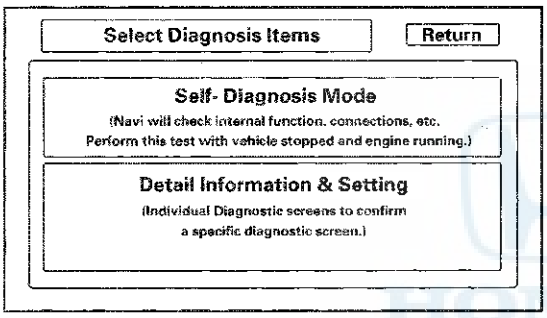

4. When the navigation unit has hard codes, the Error History icon appears yellow when the Self Diagnosis mode (System links) screen is displayed. When no hard errors are stored, the icon appears gray. To view the errors with their DTC codes, select the error history icon.

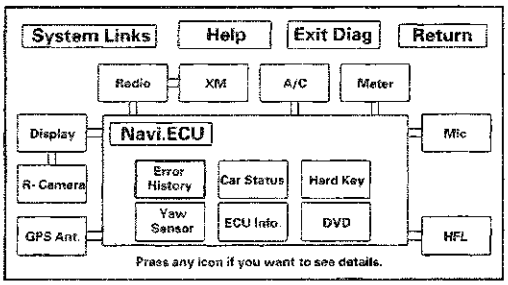

5. Select Hard Error.

NOTE: Soft errors are for factory use only.

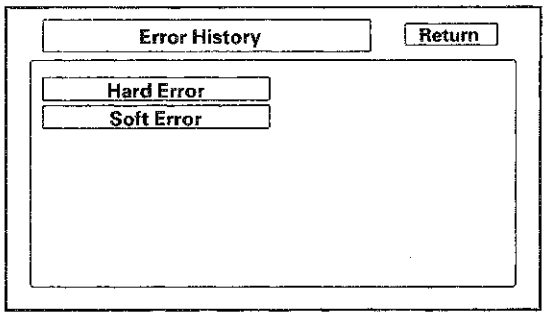

Hardware Error History

6. The Hard Error screen displays the following information for each error:

   - The DTC trouble code for the error
   - A brief description of the DTC code
   - The date and time when the error occurred.

   NOTE:
   - To see additional errors, use the interface dial to select UP or DOWN.
   - Select Clear to delete the error history. The Save feature is for factory use only.

7. Use the DTC Symptom Troubleshooting table to troubleshoot the error.

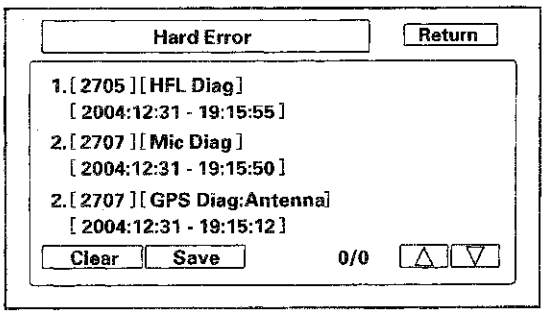

8. Clear the DTCs.

9. Select Return to exit the error history.

Software Error (Soft error) History

Software errors are not available. They are for factory use only.

(cont'd)

General Troubleshooting Information (cont'd)

How to Clear Error History

1. Do the steps in How to check Error History.
2. Select Clear in the error menu.

   NOTE:
   - By selecting Clear, all software and hardware errors stored in history are erased at the same time.
   - Save is for factory use only.

Hard error history is displayed

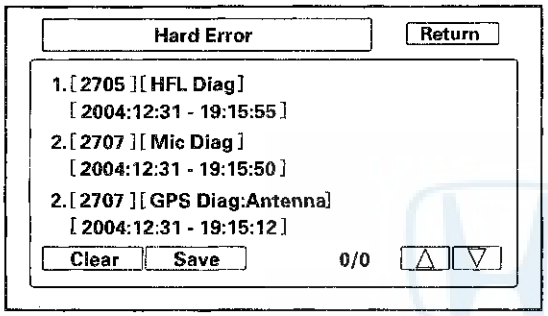

Soft error history is displayed (Soft errors are for factory use only)

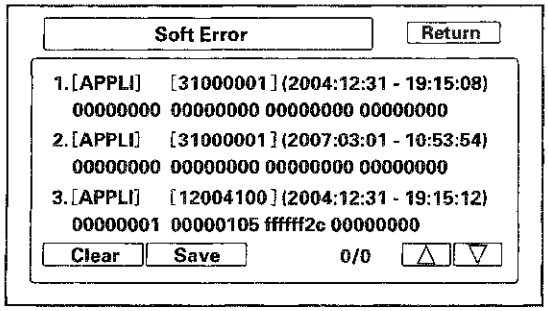

3. After selecting Clear then selecting Yes, both Hard Error history and Soft Error history are cleared at the same time.

Hard error history clear

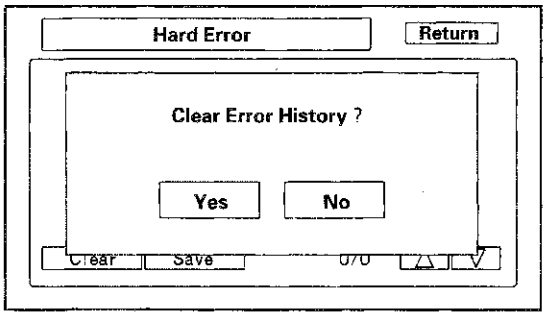

Soft error history clear (Soft errors are for factory use only)

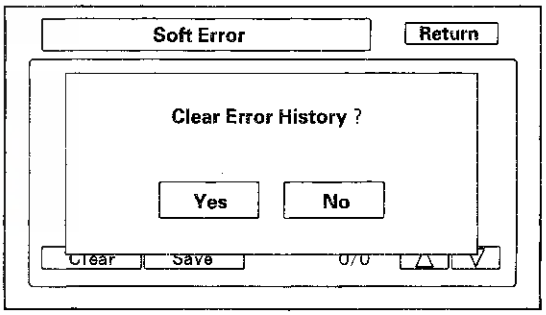

4. Press return to exit.

DTC Troubleshooting Index

DTC	Description	Circuit	Failure Detection	Page	Also Check for
1001	FROM system Info Error	Flash ROM management	Navigation unit internal Data Error.	(see page 23-193)	Low or weak battery voltage.
1101	Media Bus Send Error	Media condition monitoring	Navigation unit internal Media Error.	(see page 23-193)	Low or weak battery voltage.
1201	DVD High Temp	DVD drive	Navigation unit temperature above the upper limit. Failure in Navigation control unit fan circuit.	(see page 23-194)	• Low or weak battery voltage. • High temperature around the navigation unit.
1202	DVD Low Temp	DVD drive	Navigation unit temperature below the lower limit.	(see page 23-194)	• Low or weak battery voltage. • Low temperature around the navigation unit.
1301	GPS Antenna Error	GPS Antenna	GPS Antenna circuit Malfunction.	(see page 23-195)	Low or weak battery voltage.
1302	GPS Receiver Error 1	GPS Receiver	GPS Antenna circuit Malfunction. Navigation unit internal GPS receiver Malfunction.	(see page 23-196)	Low or weak battery voltage.
1303	GPS Receiver Error 2	GPS Receiver	Navigation unit internal GPS receiver Malfunction.	(see page 23-197)	Low or weak battery voltage.
1304	Gyro Error 1	Gyro	Navigation unit internal Gyro Malfunction.	(see page 23-197)	Low or weak battery voltage.
1305	Gyro Error 2: ECU Temp XX ℃	Gyro	Navigation unit internal Gyro Malfunction.	(see page 23-198)	Low or weak battery voltage.
1306	Vehicle Speed Pulse	Vehicle Speed Pulse	VPS Circuit Malfunction.	(see page 23-198)	Check for F-CAN DTCs.
1307	DVD Read Error	DVD disc	Scratched/Dirty DVD or Navigation unit internal DVD ROM drive.	(see page 23-199)	Low or weak battery voltage.
1402	Audio Error 2	CD	Mechanical malfunction in the CD Changer.	(see page 23-199)	Low or weak battery voltage.
1403	Audio Error 3	Display	Internal malfunction with navigation display unit.	(see page 23-200)	Low or weak battery voltage.
1409	Audio Error 9	XM	XM Antenna/Circuit Malfunction.	(see page 23-200)	Low or weak battery voltage.
1501	Aircon Error	Aircon	Communication Error between Climate control unit and Navigation unit (open/short).	(see page 23-201)	Low or weak battery voltage.

(cont'd)

DTC Troubleshooting Index (cont'd)

DTC	Description	Circuit	Failure Detection	Page	Also Check for
2601	Display Diag: Connect	Display	GA-NET Bus Circuit Malfunction open/short. ECU Bus Circuit Malfunction open/short.	(see page 23-204)	
2602	Display Diag: ROM	Display	Navigation Display Unit internal Malfunction.	(see page 23-207)	
2603	Display Diag: RAM	Display	Navigation Display Unit internal Malfunction.	(see page 23-207)	
2605	H/U Diag: Connect	H/U	GA-NET Bus Circuit Malfunction Open/Short.	(see page 23-208)	
2607	XM Diag	XM	GA-NET Bus Circuit Malfunction Open/Short. XM Antenna Circuit Malfunction.	(see page 23-210)	
2609	VRAM Diag	ECU VRAM	Navigation unit internal VRAM Malfunction.	(see page 23-211)	
2610	DRAM Diag	ECU DRAM	Navigation unit internal DRAM Malfunction.	(see page 23-212)	
2701	GPS Diag: Antenna	GPS	GPS Antenna Malfunction.	(see page 23-212)	
2702	GPS Diag: Receiver in Navigation Unit	GPS	GPS Antenna Malfunction.	(see page 23-213)	
2703	Aircon Diag	Aircon	Communication Error between Climate control unit and Navigation unit (open/short).	(see page 23-201)	Check for F-CAN DTCs.
2705	HFL Diag	HFL	HandsFreeLink Control unit internal Malfunction.	(see page 23-213)	Check for F-CAN DTCs.
2706	Gyro Diag: ECU Temp XX ℃	Gyro	Navigation unit internal Malfunction.	(see page 23-215)	
2707	Mic Diag	Mic	Mic Circuit Malfunction Open/Short.	(see page 23-216)	

Symptom Troubleshooting Index

Symptom	Diagnostic procedure	Also check for
Navigation system stays on the GPS initialization screen	System Initialization (see page 23-128)	• Navigation unit • Internal defect in GPS antenna • GPS antenna/cable is disconnected or damaged • The wrong color DVD or version is installed • The DVD is damaged or dirty • Harness/fuses/switches
Vehicle position icon constantly leaves road, moves erratically, or is displayed very far from actual vehicle position	Symptom Troubleshooting (see page 23-220)	• Navigation unit • Internal defect in GPS antenna • GPS antenna/cable • PCM (speed and fuel pulses) • Harness/fuses/switches
System always comes up in in-line diagnostic mode	Factory diagnostic screen in Line Diag (see page 23-174)	
Navigation system will not accept security code	Symptom Troubleshooting (see page 23-233)	• The DVD is damaged or dirty • Anti-theft code not matching
Navigation frequently asks for anti-theft code and/or needs GPS initialization	Symptom Troubleshooting (see page 23-236)	• Loss of voltage or poor ground (G651) • Navigation unit • Software not up to date • Low battery voltage • Harness/fuses/switches
GPS icon is white or not shown	Symptom Troubleshooting (see page 23-226)	• Navigation unit • Internal defect in GPS antenna • Aftermarket accessories connected to the system • GPS antenna/cable • Harness/fuses/switches
Vehicle icon wanders across the map when driving (does not follow a displayed road) or map or vehicle ICON spins	Symptom Troubleshooting (see page 23-232)	• Navigation unit • GPS antenna/cable • PCM (speed signal) • Internal defect in GPS antenna
No picture is displayed	Symptom Troubleshooting (see page 23-218)	• The wrong color DVD or version is installed • The DVD is damaged or dirty • Navigation unit • Navigation display unit • Harness/fuses/switches
Picture has lines or rolls	Symptom Troubleshooting (see page 23-222)	• Aftermarket accessories connected to the system • Navigation unit • Navigation display unit • Harness/fuses/switches
Picture is missing a color or tone or is an odd color	Symptom Troubleshooting (see page 23-220)	• The wrong color DVD or version is installed • The DVD is damaged or dirty • Navigation unit • Navigation display unit • Aftermarket accessories connected to the system • Harness/fuses/switches

(cont'd)

Symptom Troubleshooting Index (cont'd)

Symptom	Diagnostic procedure	Also check for
Display day/night mode does not work or does not work properly	Symptom Troubleshooting (see page 23-231)	• Navigation unit • The gauge brightness level is set to High in day or night mode • Navigation display unit • Gauge control module (CAN) • The navigation display brightness is not set to auto mode • Harness/fuses/switches
System locks up or freezes constantly	Symptom Troubleshooting (see page 23-232)	• Navigation unit • The wrong color DVD or version is installed • The DVD is damaged or dirty • Harness/fuses/switches
Voice guidance cannot be heard, is broken up, or there is static	Symptom Troubleshooting (see page 23-226)	• Volume or voice feedback setting (see Owner's manual) • Navigation unit • Audio unit/amplifier • Harness/fuses/switches
Voice control does not work/ respond	Symptom Troubleshooting (see page 23-227)	• Navigation unit • Microphone • Harness/fuses/switches • HandsFreeLink control unit • Audio unit (ANC circuit)
Navigation cannot control HVAC by voice command	Symptom Troubleshooting (see page 23-230)	• The wrong color DVD or version is installed • The DVD is damaged or dirty • Harness/fuses/switches • Wrong navigation unit (model code) • B-CAN DTCs
Navigation cannot control XM radio	Symptom Troubleshooting (see page 23-235)	• The wrong color DVD or version is installed • The DVD is damaged or dirty • Audio unit • XM receiver • Harness
Navigation cannot control audio system	Symptom Troubleshooting (see page 23-235)	• Audio unit • Harness • The wrong color DVD or version is installed • The DVD is damaged or dirty
Interface dial buttons do not work	Symptom Troubleshooting (see page 23-224)	• Navigation unit • The wrong color DVD or version is installed • The DVD is damaged or dirty • Navigation display unit • Interface dial • Harness/fuses/switches
Today's Destinations button is dim and not selectable in the Enter destination by screen (grayed-out)	The customer has not entered a group of locations for Today's Destinations. This is normal. The button is only selectable if the customer is using this function.	See Owner's Manual

Symptom	Diagnostic procedure	Also check for
Previous Destinations button is dim and not selectable in the Enter destination by screen (grayed-out)	The vehicle may be new, or the customer deleted the destination. Without a stored previous destination, the system can't route to a previous destination. Enter a destination, and allow the system to route to it. After the trip, the Previous Destinations button will be selectable.	
Address cannot be found or system gives poor routing	• Verify proper operation and system limitations using the owner's manual. • See Answering customer question about Navigation coverage in general troubleshooting.	• Database limitations (address not in database) • Wrong color DVD installed • Older database
The map will not display the Southern portion of the U.S. or the Northern parts of Canada	North American coverage is different for U.S./Canada markets. See the version diagnostic screen (see page 23-189) for details on coverage differences	The wrong colored DVD or market DVD is installed
Navigation display stays on with ignition switch in LOCK (0)	Symptom Troubleshooting (see page 23-234)	• Harness/fuses/switches • Aftermarket accessories connected to the system
DVD screen error messages	Symptom Troubleshooting (see page 23-230)	• Navigation unit • The wrong colored DVD or version installed • Navigation display unit • The DVD is damaged or dirty
Navigation system will not go beyond the disclaimer screen and displays the OK button	Also see Interface Dial buttons do not work	• The wrong colored DVD or version installed • The DVD is damaged or dirty • Navigation unit
The navigation anti-theft code card is lost or missing	See anti-theft feature (see page 23-126)	
The vehicle icon lags behind when the vehicle turns	See self-inertial navigation limitations (see page 23-126)	• Aftermarket accessories connected to the system • GPS antenna/cable
Navigation screen is darker than normal or takes time to brighten when it is cold	See LCD unit limitations (see page 23-127)	Compare to a known-good vehicle
The navigation clock is off by 1 to 3 hours after replacing the navigation unit	See service precautions (see page 23-128)	• Do map matching (see page 23-129) • GPS antenna/cable • Check and adjust the clock settings
A new navigation DVD is needed	See obtaining a navigation DVD (see page 23-129)	

(cont'd)

Symptom Troubleshooting Index (cont'd)

Symptom	Diagnostic procedure	Also check for
Time is not correct	Reset Time Adjustment in set-up See service precautions (see page 23-128)	• The wrong colored DVD or version is installed • Reset Time Adjustment in set-up • A defective GPS receiver in the navigation unit
The DVD is scratched or dirty	See DVD Handling and Cleaning (see page 23-130)	Navigation unit
The wrong DVD was installed and now the system does not function properly	See Precaution customer Sneak Previews (see page 23-132)	• Install the correct version DVD • Check any official Honda service website for more service information about the navigation unit.
A POI cannot be found	See how to answer customer questions about navigation coverage (see page 23-132)	• The DVD is scratched or dirty • The database may be out of date. Confirm the POI exists in a current production vehicle
A specific city cannot be found	See how to answer customer questions about navigation coverage (see page 23-132)	• The DVD is scratched or dirty • The database may be out of date. Confirm the address exists in a current production vehicle
An In Line Diagnosis screen appears every time vehicle is started every	See factory diagnostic screen In Line Diag (see page 23-174)	
The Acura Globe Screen (not the Honda Globe Screen) appears time the vehicle is started	Symptom troubleshooting (see page 23-236)	Also see the symptom the wrong DVD was installed and now the system does not function properly
Navigation unit will not eject or accept the navigation DVD	Symptom troubleshooting (see page 23-237)	

System Description

Overview

The navigation system is a highly-sophisticated, hybrid locating system that uses satellites and a map database to show you where you are and to help guide you to a desired destination.

The navigation system receives signals from the global positioning system (GPS), a network of 24 satellites in orbit around the earth. By receiving signals from several of these satellites, the navigation system can determine the latitude, longitude, and elevation of the vehicle. In addition, signals from the system's yaw rate sensor and the PCM (vehicle speed pulse) enable the system to keep track of the vehicle's direction and speed of travel.

This hybrid system has advantages over a system that is either entirely self-contained or one that relies totally on the GPS. For example, the self-contained portion of the system can keep track of vehicle position even when satellite signals cannot be received. When the navigation system is on, the GPS can keep track of the vehicle position even when the vehicle is transported by ferry.

The navigation system applies all location, direction, and speed information to maps and calculates a route to the destination entered. As you drive to that destination, the system provides both visual and audio guidance.

This navigation system also has voice recognition that allows voice control of most of the navigation functions. The Navigation TALK and BACK buttons on the steering wheel activate the voice control. The voice control also allows control of the audio and climate functions. The max brightness signal is passed to the navigation unit through the F-CAN bus.

The illumination signal (headlights ON) is used by the navigation unit to automatically switch the display between Night and Day brightness modes. When the gauge control module brightness control is set to max brightness, the navigation system stays in the day mode, even with the headlights on.

The GA-NET II communication bus passes information back and forth between the display panel control unit, the navigation unit and the audio system. The information passed on this bus is audio settings directed by the navigation unit.

The Comm. Bus connects the HFL, and navigation units. This bus supports these functions:

- The navigation unit sends a POI phone number (on the Calculate route to screen) to the HandsFreeLink control unit for dialing.
- The navigation system could download the cellular phone book and call phone numbers in the book.
- The navigation unit can sense the status of a phone that is paired to the HFL.

(cont'd)

System Description (cont'd)

System Diagram

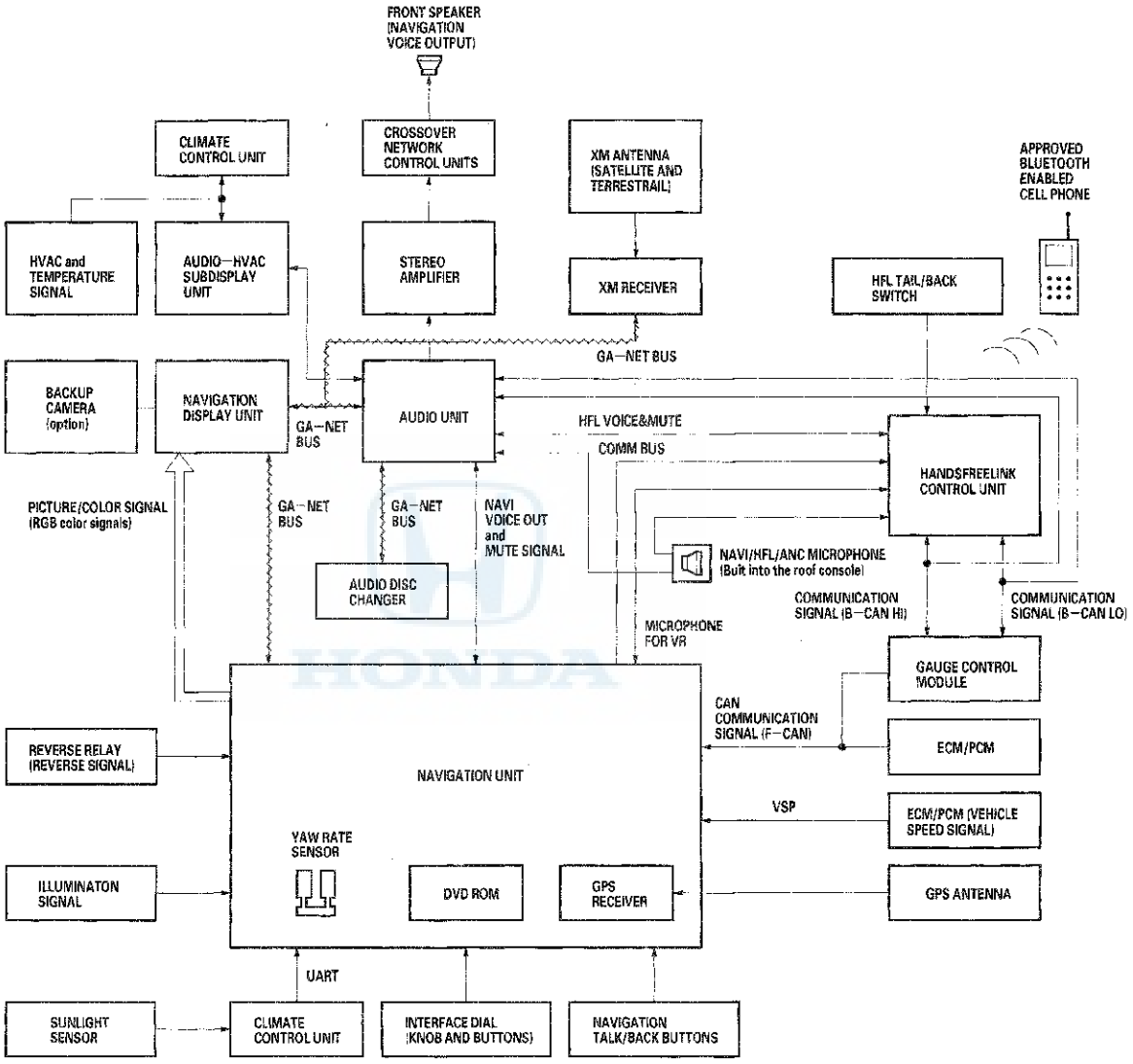

Navigation Function

The navigation system is composed of the navigation unit, the ECM/PCM (vehicle speed signal), the GPS antenna, microphone, the voice control switch, audio unit, and the audio-HVAC subdisplay unit.

Function Diagram

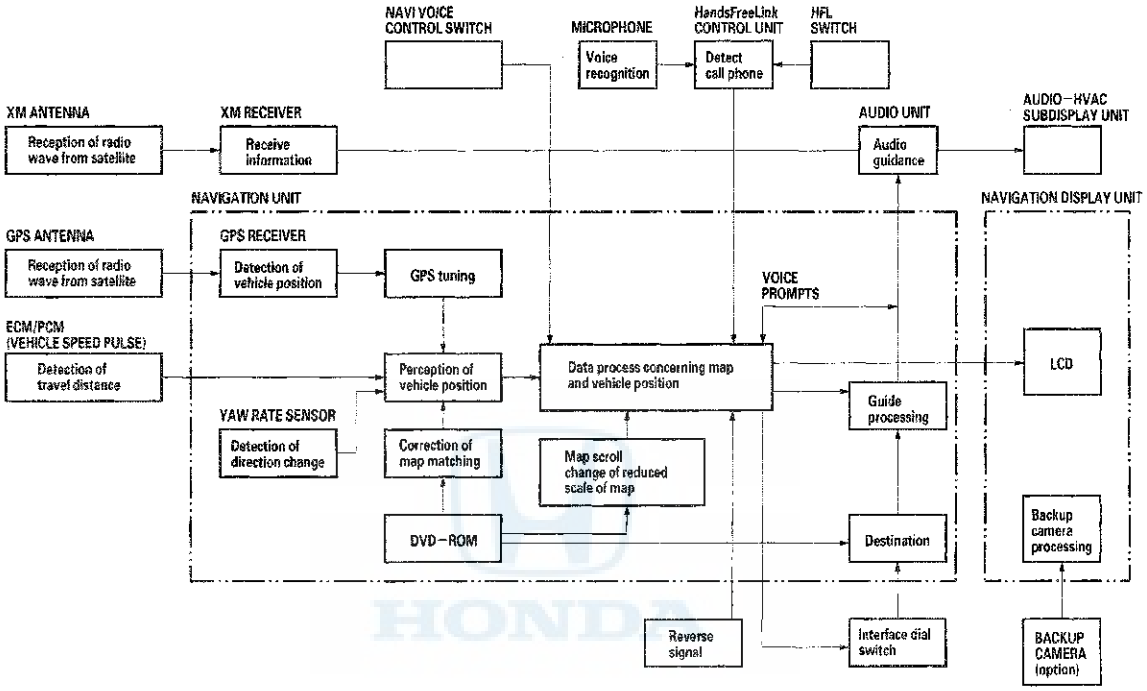

GA-Net Bus Configuration

The GA-Net bus passes audio and navigation commands throughout the navigation and audio components. These commands include navigation audio/XM selections by voice, and XM station and music title names. Because the entire bus is interconnected between components, an open or short in the GA-Net bus harness may cause any or all of these functions to become inoperative.

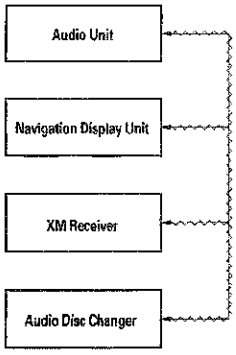

(cont'd)

System Description (cont'd)

Vehicle Speed Pulse
The vehicle speed pulse is sent by the ECM/PCM. The ECM/PCM receives a signal from the countershaft speed sensor, then processes the signal and transmits it to the speedometer and other systems.

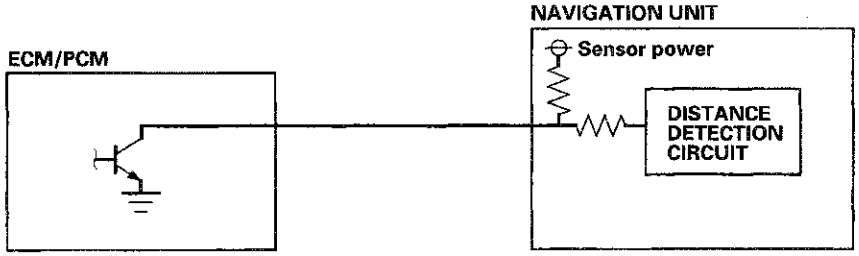

Yaw Rate-Lateral Acceleration Sensor
The yaw rate-lateral acceleration sensor (located in the navigation unit) detects the direction change (angular speed) of the vehicle. The sensor is an oscillation gyro built into the navigation unit.

Sensor Element Structure
The sensor element is shaped like a tuning fork, and it consists of the piezoelectric parts, the metal block, and the support pin. There are four piezoelectric parts: one to drive the oscillators, one to monitor and maintain the oscillation at a regular frequency, and two to detect angular velocity. The two oscillators, which have a 90-degree twist in the center, are connected at the bottom by the metal block and supported by the support pin. A detection piezoelectric part is attached to the top of each oscillator. The driving piezoelectric part is attached to the bottom of one oscillator, and the monitoring piezoelectric part is attached to the bottom of the other oscillator.

Oscillation Gyro Principles
The piezoelectric parts have electric/mechanical transfer characteristics. They bend vertically when voltage is applied to both sides of the parts, and voltage is generated between both sides of the piezoelectric parts when they are bent by an external force. The oscillation gyro functions by utilizing this characteristic of the piezoelectric parts and Coriolis force. (Coriolis force deflects moving objects as a result of the earth's rotation.) In the oscillation gyro, this force moves the sensor element when angular velocity is applied.

Operation
1. The driving piezoelectric part oscillates the oscillator by repeatedly bending and returning when an AC voltage of 6 kHz is applied to the part. The monitoring-side oscillator resonates because it is connected to the driving-side oscillator by the metal block.
2. The monitoring piezoelectric part bends in proportion to the oscillation and outputs voltage (the monitor signal). The navigation unit control circuit controls the drive signal to stabilize the monitor signal.
3. When the vehicle is stopped, the detecting piezoelectric parts oscillate right and left with the oscillators, but no signal is output because the parts are not bent (no angular force).
4. When the vehicle turns to the right, the sensor element moves in a circular motion with the right oscillator bending forward and the left oscillator bending rearward. The amount of forward/rearward bend varies according to the angular velocity of the vehicle.
5. The detecting piezoelectric parts output voltage (the yaw rate signal) according to the amount of bend. The amount of vehicle direction change is determined by measuring this voltage.

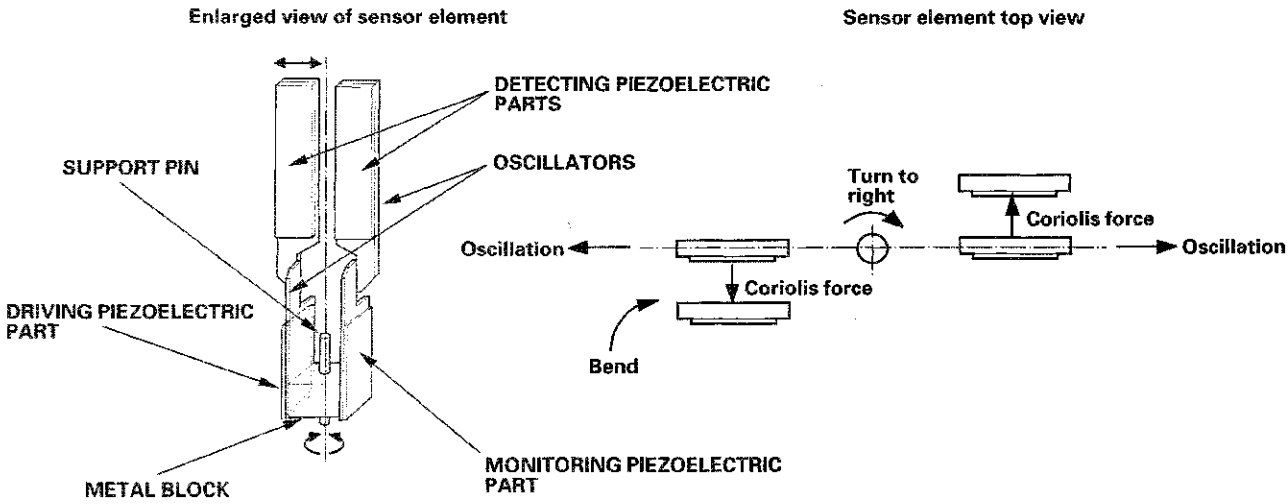

(cont'd)

System Description (cont'd)

Global Positioning System (GPS)
The global positioning system (GPS) enables the navigation system to determine the current position of the vehicle by using the signals transmitted from the satellites in orbit around the earth. The satellites transmit the satellite identification signal, orbit information, transmission time signal, and other information. When the GPS receiver receives a signal from four or more satellites simultaneously, it calculates the current position of the vehicle based on the distance to each satellite and the satellite's position in its respective orbit.

Position detection Image with GPS satellite

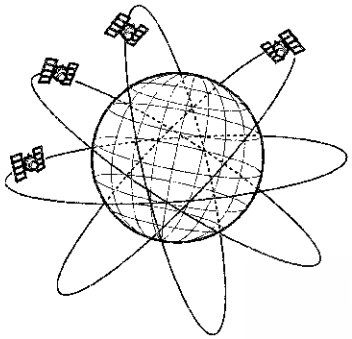

NOTE: Four satellites on each of 6 orbits.

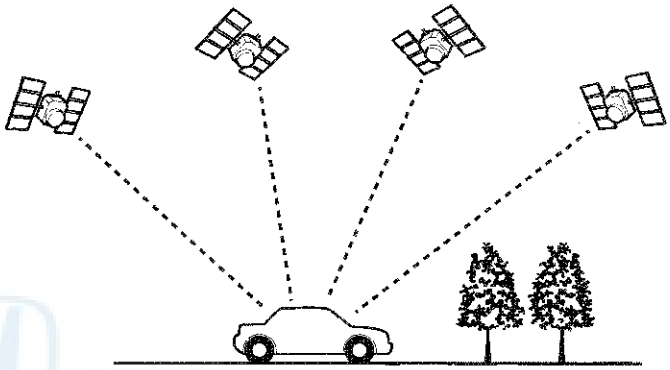

Precision of GPS
The precision of the GPS varies according to the number of satellites from which signals are received and the view of the sky. The acuracy is indicated by the color of the GPS icon shown on the display.

GPS ICON COLOR	NUMBER OF SATELLITES	CONDITION	DESCRIPTION
No GPS icon	None	Faulty reception	The GPS can't be utilized due to a faulty GPS receiver, open in the wire, or other fault or interference.
White GPS icon	2 or less	Impossible to detect vehicle position	GPS function is normal. The satellite signals received by the GPS are too few to detect the vehicle position.
Green GPS icon	3	Vehicle position detectable in 2 dimensions	The longitude and latitude of the vehicle position can be detected. (Less precise than detection in three dimensions)
	4 or more	Vehicle position detectable in 3 dimensions (elevation displayed)	The longitude, latitude and the altitude of the vehicle position can be detected. (More precise than detection in two dimensions)

GPS Antenna
The GPS antenna amplifies and transmits the signals received from the satellites to the GPS receiver.

GPS Receiver and Clock
The GPS receiver is built into the navigation unit. It calculates the vehicle position by receiving the signal from the GPS antenna. The current time, vehicle position and signal reception condition is transmitted from the GPS receiver to the navigation unit to adjust vehicle position.

Navigation Unit
The navigation unit calculates the vehicle position and guides you to the destination. The unit performs map matching correction, GPS correction, and distance tuning. It also controls the menu functions and the DVD-ROM drive, and interprets voice commands. With control of all these items, the navigation unit makes the navigation picture signal, then it transmits the signal to the display panel control unit and audio driving instructions to the audio unit.

Calculation of Vehicle Position
The navigation unit calculates the vehicle position (the driving direction and the current position) by receiving the directional change signals from the yaw rate sensor and the travel distance signals from vehicle speed pulse (VSP) signal of the ECM/PCM.

Map Matching Tuning
The map matching tuning is accomplished by indicating the vehicle position on the roads on the map. The map data transmitted from the DVD-ROM is checked against the vehicle position data, and the vehicle position is indicated on the nearest road. Map matching tuning does not occur when the vehicle travels on a road not shown on the map, or when the vehicle position is far away from a road on the map.

GPS Tuning
The GPS tuning is accomplished by indicating the vehicle position as the GPS's vehicle position. The navigation unit compares its calculated vehicle position data with the GPS vehicle position data. If there is large difference between the two, the indicated vehicle position is adjusted to the GPS vehicle position.

Distance Tuning
The distance tuning reduces the difference between the travel distance signal from the VSP and the distance data on the map. The navigation unit compares its calculated vehicle position data with the GPS vehicle position data. The navigation unit then decreases the tuning value when the vehicle position is always ahead of the GPS vehicle position, and it increases the tuning value when the vehicle position is always behind the GPS vehicle position.

(cont'd)

System Description (cont'd)

Route Guidance
The navigation unit can calculate different routes to a selected destination. You have five options:
- Direct Route—Calculate a route that is the most direct.
- Easy Route—Calculate a route that minimizes the number of turns needed.
- Minimize Freeways—Calculate a route that avoids freeway travel. If that is not possible, keep the amount of freeway travel to a minimum. This is not selectable (button grayed out) for trips greater than 100 miles.
- Minimize Toll Roads—Calculate a route that avoids, or minimizes travel on toll roads. This is not selectable (button grayed out) for trips greater than 100 miles.
- Maximize Freeways—Calculate a route that uses freeways as much as possible.

Audio Guidance
The navigation unit transmits audio driving instructions before entering an intersection or passing a junction. The audio instructions come through the audio unit to the front speakers.

NOTE: The front speakers are muted whenever the navigation system is giving guidance commands, and all of the speakers when the voice control system is being used.

Muting Signal Logic
The audio muting logic is orchestrated by the audio unit. The audio unit determines what audio source has priority to use the speakers.

The priority of the audio sources is as follows:

HFL has the highest priority, followed by navigation, and finally the radio/CD-DVD player. The priority is passed by HFL to the audio unit by dedicated mute wires. The navigation mute signal is passed to the stereo amplifier.

The navigation unit temporarily disables the voice control buttons, but allows guidance to be heard. In addition, the audio unit suppresses the output from the audio unit, XM receiver, disc player, or other audio accessories.

When the navigation system sends out a voice route guidance command, the audio front speaker is muted, and the navigation voice is heard in the front speakers.

When the navigation voice control system is in use, all of the speakers are muted, and the navigation voice prompts are heard from the front speakers.

Solar Angle
The navigation system uses the sun's angle, along with the sunlight sensor to control the driver/passenger A/C air flow.

Off Road Tracking (bread-crumbs)
Off road tracking dots that can be followed on the map retrace your route back to a mapped (digitized) road.

Clock and Time Zone
The clock set up allows you to set daylight savings time, auto time zone and time adjustment.

DVD-ROM
The DVD includes:
- Map Data
- Point of interest (POI)
- Navigation software

Audio Unit
The audio unit receives the voice guidance instructions from the navigation unit and transmits the instructions through the front speaker even when the audio system is in use. The audio unit also uses the HFL-navigation-ANC microphone signal to check the ANC output.

NOTE: If the navigation volume and/or voice feed back is turned off, this feature is disabled.

Display Unit
The display unit uses a liquid crystal display (LCD). The LCD is a 8-inch-diagonal, thin film transistor (TFT), strip type with 336,960 picture elements. The color film and fluorescent light are laid out on the back of the liquid crystal film.

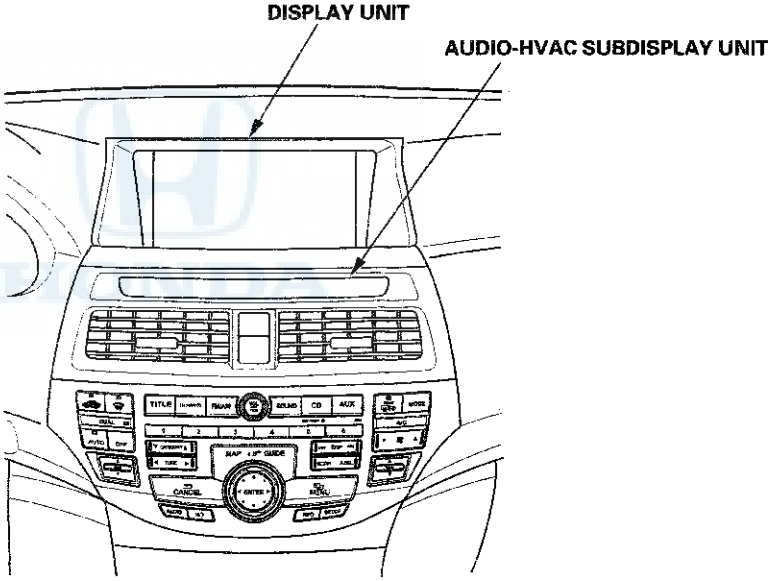

(cont'd)

System Description (cont'd)

Microphone (Mic)
Receives voice commands and transmits them to the navigation unit or HandsFreeLink control unit or active noise cancellation (ANC) for interpretation.
These systems share the same microphone.

NAVIGATION TALK Button
Activates the voice control system in the navigation unit to accept voice commands.

NAVIGATION BACK Button
Returns the display to the previous screen (similar function as the CANCEL button).

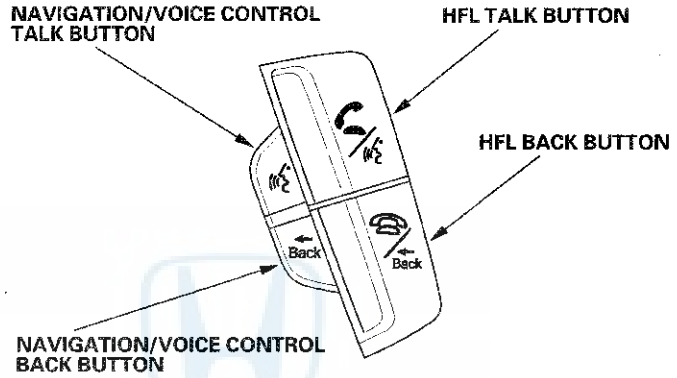

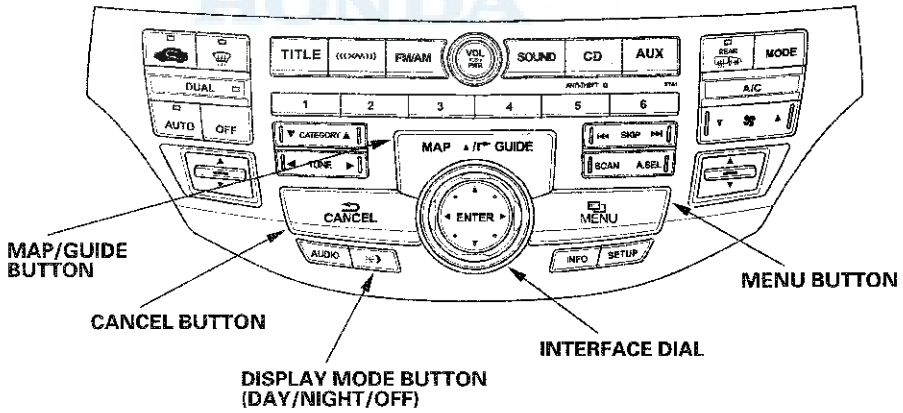

Glossary
The following is a glossary of terms pertaining to the Voice Recognition Navigation System.

Item	Definition
Address Book	The HFL system can import a copy of the phone book from and approved HFL compatible phone and display the imported phone book on the navigation screen as the address book. See the Owner's Manual for more information.
B-CAN	Body CAN Bus (see CAN)
Bread-crumbs (White dots)	Off road tracking dots that can be followed on the map to retrace your route back to a mapped (digitized) road. This function can be turned on/off in Setup screen 1.
CAN	Controller Area Network. This communication network allows processors in the vehicle to send/receive information. The fuel pulses used by the MID trip computer are received from the ECM/PCM using the F-CAN (Fast Controller Area Network) bus.
CPU	Central Processing Unit. The main device within the navigation unit that coordinates the rest of the electronic functions.
CSS	Countershaft (Output) Speed Sensor. This sensor reads the output shaft speed at the transmission and provides a speed pulse to the ECM/PCM.
Database	This consists of the Map data, and the POI (Points Of Interest) data stored on the DVD.
DBW	Drive By Wire. Allows electrical control of the throttle without the need of a mechanical linkage.
DCA	Detailed Coverage Area. Main metropolitan areas in the Lower 48 states, and Canada are mapped to this level. See the Navigation Owner's manual for a list of these areas.
DTC	Diagnostic Trouble Codes. Use the HDS tablet to obtain, and troubleshoot the cause of these codes.
Dead Reckoning	The use of the speed signal, and yaw rate sensor to position the vehicle on the map even when tall buildings, or driving in a tunnel obscures the GPS signal.
Digitized Road	A road that appears on the navigation screen. The road name will appear at the bottom of the navigation screen. If the user drives off road, the navigation systems Not on a digitized road, and after 1/2 mile, the breadcrumbs will appear.
Disclaimer Screen	Screen containing cautionary information. It is meant to be read carefully, and acknowledged by the customer when using the navigation system.
DVD or DVD-ROM	Digital Versatile Disk. The navigation program and database resides on this disk. See the Navigation Owner's Manual for information on how to order a replacement or an update DVD.
ECM	Engine Control Module. Typically referred to as the ECM.
FAQ	Frequently Asked Questions. See the Navigation Owner's Manual for a list of the customer FAQs, and troubleshooting information.
F-CAN	Fast CAN Bus (see CAN)
GA-Net	The GA-Net allows the audio unit to communicate with all the audio and navigation components in a vehicle. If there is an open in the GA-Net, components or the entire audio and navigation system may appear inoperative.
GPS	Global Positioning System. A network of 24 satellites in orbit around the earth. The navigation system can simultaneously receive signals from up to 12 satellites to accurately position the vehicle on the map.

(cont'd)

System Description (cont'd)

Item	Definition
HDS	Honda Diagnostic System. A hand held tablet PC used for in diagnosing vehicle problems. This device can be used to obtain DTC codes for diagnosis of the navigation system and CAN related problems.
HFL	HandsFreeLink uses Bluetooth technology as a wireless link between it and an approved Bluetooth compatible cell phone. See the vehicle Owner's manual or Quick Start Guide for more information.
H/U	Head Unit. The navigation system display assembly in the dash.
Initialization	This refers to the period needed to re-acquire the GPS satellite orbital information whenever the navigation system power has been disconnected. This can take from 10 to 45 minutes.
Interface Dial	This control device consists of a rotating knob and the buttons surrounding it. This device allows control of the navigation, audio, and climate functions displayed on the screen.
Jog Dial	See interface Dial.
LCD	Liquid Crystal Display (the navigation screen)
Map Matching	The received GPS information allows the navigation system to position the vehicle on the map. Map matching has occurred if the map screen displays the current street name in the bottom-shaded area.
Mic	Abbreviation for the microphone used for receiving voice commands. The ANC unit may also use it to check its tuning. It is located near the map light in the ceiling.
MID	Multi-Information Display
MW	Maneuver Window. While on-route to a destination, this window displays information about the next maneuver.
Navi	Abbreviation for the Navigation System.
Off-Road Tracking	See Breadcrumbs
Off Route	This occurs when the user leaves mapped roads. Off road tracking dots (breadcrumbs) are displayed if the option is enabled in the setup menu. The user can use them to return to a mapped road. The bottom of the navigation screen displays Not on a digitized road.
Outlying Areas	These are rural areas that typically have only their main roads mapped. All other roads are shown in light brown for reference only, since they have not been verified.
Paired	Linking your cell phone to the HFL
PC Card Slot	The PC Card (PCMCIA, type II) slot is for factory use only. Make sure that the sliding door is closed at all items, if opened, an error message is displayed on the screen (if equipped).
PCM	Powertrain Control Module. This unit supplies the navigation system speed signal, and charge signal via the F-CAN network. Also referred to as ECM.
PCMCIA	A computer industry defined term referring to the PC Card slot standard.

Item	Definition
PIN	Personal Identification Number, a random 4 digit number created by the customer to protect personal information.
POI	Point Of Interest. These are the businesses, schools, etc. found under the places option on the main menu.
Polygon	Colored areas on the map screen denoting parks, schools, etc. Refer to the Navigation System Manual Driving to Your Destination for a list of the assigned colors.
QWERTY	Keyboard layout resembling the typewriter keys. The keyboard layout can be changed to an alphabetical layout in the Setup mode.
SCS service connector	The service check signal 2-pin connector used to put the navigation system into the diagnostic mode.
Security Code	Code needed to activate the navigation system. You can get the security code from the iN by entering the navigation unit serial number. You can find the serial number on the diagnostic screens (Unit Check, Navi ECU) or on the underside of the navigation unit.
Touch Screen Buttons or Touch Sensor	Audio-HVAC display panel has 2 layers of clear film on the screen panel. If you touch the screen panel, the film layers engage and the display unit detects the touch point.
Tuning	A continual update of internal navigation system scaling factors. See the individual sensor tuning discussions under either System Description, or System Diagnostic Mode (see page 23-170).
Unverified Streets	These streets have not been verified for turn restrictions, one-way, etc. They appear light brown on the map. You can enter address destinations in these areas, but depending on your Unverified Routing choice in setup, voice guidance may end at the last verified street closest to your destination.
Verified Streets	These streets consist of the detailed metropolitan coverage areas, and all other inter-town connection roads. These roads are shown in black on the map.
VP	Vehicle Position. When in map mode, this circular icon shows the vehicle position on the map. Touch this icon to show the latitude, longitude, and elevation of your current position.
VR	Voice Recognition. This allows voice control of many of the navigation functions. The hardware consists of the microphone, voice control switch (navigation Talk/Back buttons), and the front speakers. See the overview for more information.
	Back buttons), and the front speakers. See the overview for more information.
VSP	Vehicle Speed Pulse. This pulse signal coming from the PCM (via the CSS) is used to update the Vehicle position on the map. These pulses do not indicate direction (forward or backward). When in reverse, the navigation receives a
	signal and directs the VP to move backwards on the map.
XM	This device receives information from the XM satellites and passes XM audio information to the audio unit. In addition, traffic information is sent to the
	navigation unit (see AcuraLink).
Yaw Sensor	This device is located in the navigation unit and senses the side-to-side twisting force generated when the vehicle turns. See a detailed description of how this sensor works in this manual.

(cont'd)

System Description (cont'd)

Diagnostic System Diagram
This diagram below shows all of the navigation diagnostic features available for system troubleshooting. The diagram starts at the center, and works outward in layers.

Access to the diagnostic features begins by starting the vehicle. This is necessary so the system can check the other systems connected by various busses. After starting the vehicle you can enter the diagnostic mode either by pressing and holding MENU + MAP/GUIDE + CANCEL, or by connecting the 2-PIN SCS connector.

The main menu screen allows 2 checking modes - one automatic, and one manual:

- The automatic diagnostic check starts when you select "SELF DIAGNOSTIC MODE". The system runs for several seconds, and reports any issues with Red icons. Rotate the interface dial and select the icon you wish obtain the problem details.
- The manual diagnostic check is selected from the main menu by selecting "DETAIL INFORMATION AND SETTING". The traditional diagnostic menu is displayed. This allows you to obtain additional details as instructed in the troubleshooting procedures.

NOTE: Do not clear or change settings unless specified by either the Service Manual troubleshooting procedures or by the factory. Otherwise, you may accidentally delete customer information, or remove the latest flash software version installed by the factory.

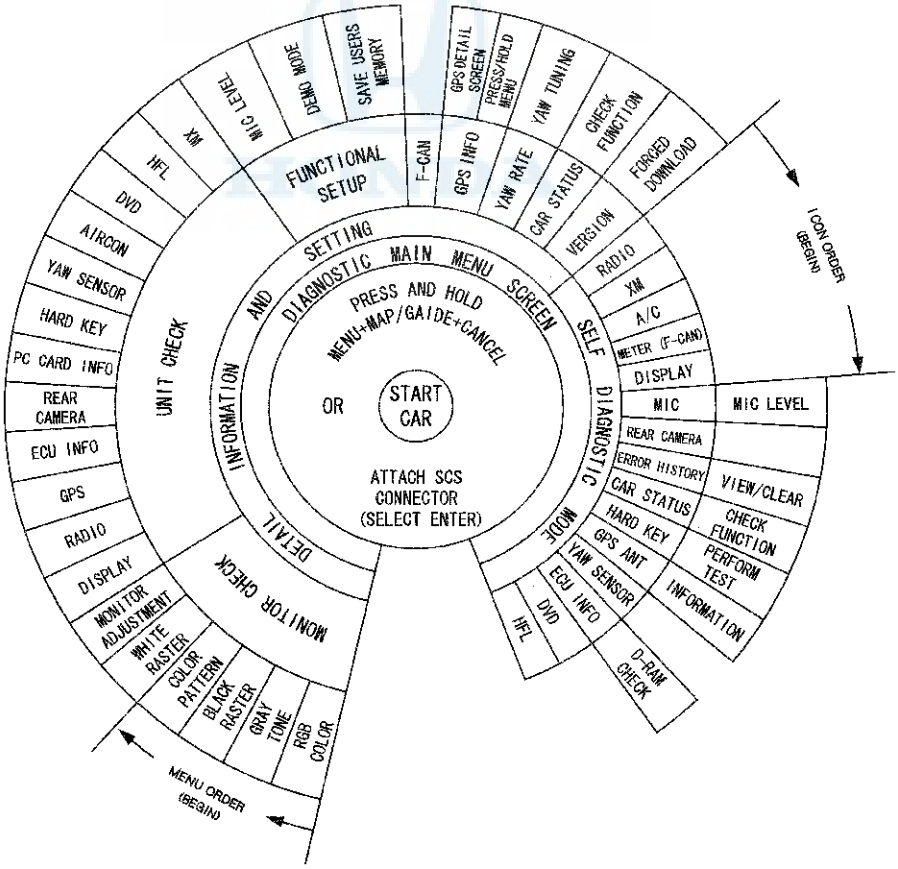

Navigation unit connectors

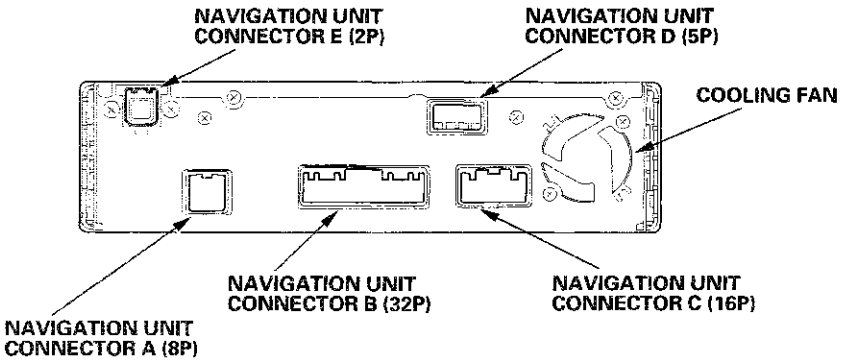

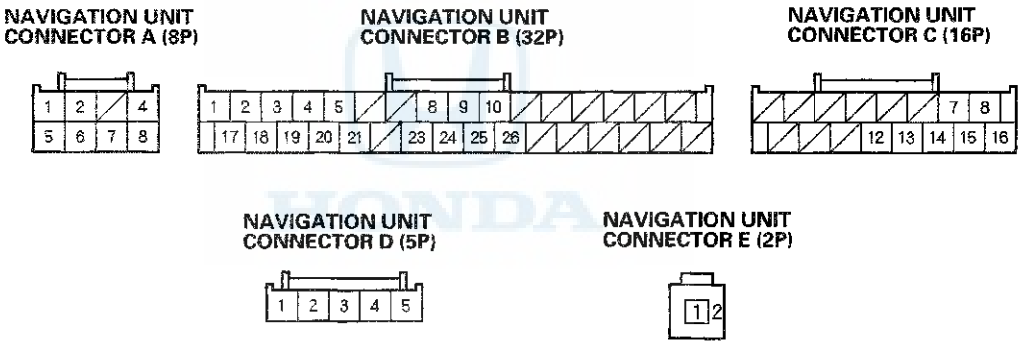

All connectors show wire side of female terminals

HFL-NAVIGATION-ANC microphone 7P connector

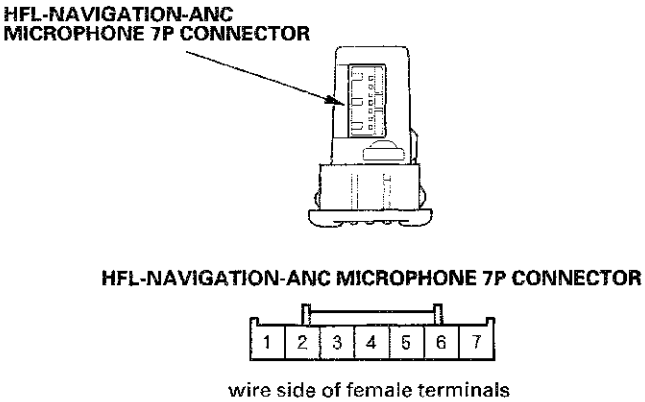

wire side of female terminals

(cont'd)

System Description (cont'd)

Navigation display unit 28P connector

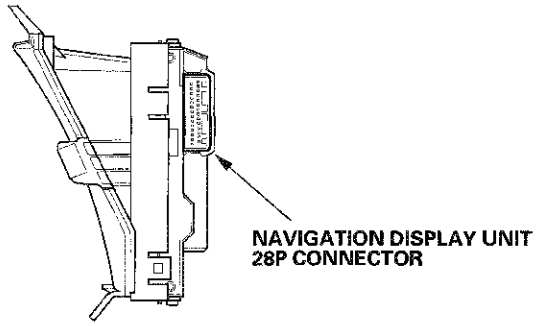

NAVIGATION DISPLAY UNIT 28P CONNECTOR

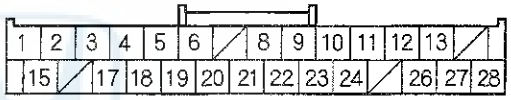

Wire side of female terminals

Interface dial 5P connector

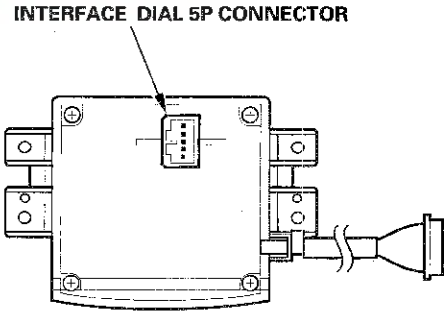

INTERFACE DIAL 5P CONNECTOR

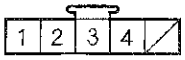

Wire side of female terminals

Navigation Unit Inputs and Outputs for Connector A (8P)

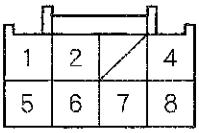

Wire side of female terminals

Navigation Unit Connector A (8P)

Terminal Number	Wire Color	Terminal Name	Description	Voltage (about)	Symptom
1	WHT	+B (+B Power source)	Continuous power source	Battery voltage	If open: Display picture goes out (display back light still on). NOTE: System will reboot to enter code screen. If short to ground: Blows fuse No. 15 (10 A) in the under-hood fuse/relay box.
2	PUR	ACC (Accessory)	Power source for accessories	Battery voltage at ACCESSORY (I)	If open: Display picture goes out (display back light still on). If short to ground: Blows fuse No. 18 (7.5 A) in the driver's under-dash fuse/relay box.
4	BLK	GND (Ground) (G605)	Ground for navigation unit	0 V	If open: No effect on system. If short to ground: No effect on system.
5	LT BLU	BACK LT (Back light or reverse signal)	Reverse signal of select lever from Multiplex Integrated Control Unit (A/T) or backup light switch (M/T)	In reverse, battery voltage: Otherwise 0 V	If open: Navigation never sees reverse. Diagnostic screen Car Status, Back=0. If short to ground: Blows fuse No. 5 (7.5 A) in the driver's under-dash fuse/relay box.
6	BLU	VSP (Vehicle speed pulse)	Vehicle speed pulse signal from PCM	0—5 V pulses average 2.5 V (Depending on bus traffic)	If open: No vehicle speed pulses. Diagnostic screen Car Status, VSP Navi=0. If short to ground: No vehicle speed pulses. Diagnostic screen Car Status, VSP Navi=0.
7	RED	DIAG+ (Diagnostic positive)	Service check signal for navigation system	5—6 V	If open: No effect on system. If short to ground: System goes into diagnostic mode at key ON (I) and (II).
8	YEL	DIAG— (Diagnostic negative)	Ground for service check signal	0 V	If open: The system will not go into diagnostic mode when using the SCS jumper. If short to ground: No effect on system.

(cont'd)

System Description (cont'd)

Navigation Unit Inputs and Outputs for Connector B (32P)

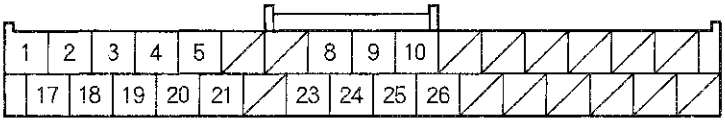

Wire side of female terminals

Navigation Unit Connector B (32P)

Terminal Number	Wire Color	Terminal Name	Description	Voltage (about)	Symptom
1	WHT	R SIG 1 (Red signal)	Red color signal	0.7 V AC average	If open: Red color missing (see RGB Color diagnostic). If short to ground: Red color missing (see RGB Color diagnostic).
2	RED	G SIG 1 (Green signal)	Green color signal	0.7 V AC average in RGB color diagnostic mode	If open: Green color missing (see RGB Color diagnostic). If short to ground: Green color missing (see RGB Color diagnostic).
3	GRY*	SH SIG 1 (Shield signal)	Shield for terminal No. 1, 2, 17, 18, 19	0 V	If open: No change to display. If short to ground: No change to display.
4	ORN	AC-SI (Air conditioner serial in)	Communication signal for climate control unit	——	If open/short: HVAC will not respond to navigation commands.
5	GRY	ILL+ (Illumination positive)	Parking light on signal	Lights on: battery voltage, Lights off: 0 V	If open: When brightness = Auto, night mode for the display is inoperative when lights on. If short to ground: Blows No. 6 (7.5 A) fuse in passenger's under-dash fuse/relay box.
8	WHT	CAN-H (CAN high)	F-CAN bus communication	Pulses 2.5—6 V average 2.5 V (depends on F-CAN communication traffic)	If open: 1) System Links FI-ECU, and Meter both show NG. 2) F-CAN diagnostic = NG. 3) B-CAN diagnostic = NG. 4) Car status CHG (CAN) = 0. 5) Functional Setup, Trip info, FUP & Sampled FL = 0. If short to ground: Same diagnostic conditions as when open, and also sets the following DTCs. • B1168 Gauge Control Module loss of Comm. (Engine) • B1169 Gauge Control Module loss of Comm. (A/T) • B1178 F-CAN communication Circuit error. • U0073 (F-CAN bus off) • U0155 (F-CAN Gauge control module) • U0121 (F-CAN VSA control)
9	GRY*	GA-NET SH ECU BUS (Shield display bus)	Shield for display bus No. 10, 20 terminal	0 V	If open: No change to display. If short to ground: No change to display.
10	GRN	GA-NET ECU BUS+ (Display bus positive)	Data bus+ GA-NET	0—5 V pulses average 2.5 V (depends on bus traffic)	If open: Navigation buttons do not work. If short to ground: Navigation buttons do not work.

*: The shielded wires have a heat-shrink tube insulating the outside of the wire.
The color of the insulating tube, typically black or dark gray, may not match the color of the wire shown on the circuit diagram.

Navigation Unit Connector B (32P)

Terminal Number	Wire Color	Terminal Name	Description	Voltage (about)	Symptom
17	YEL	B SIG 1 (Blue signal)	Blue color signal	0.2 V AC average in RGB color diagnostic mode	If open: Blue color missing (see RGB Color diagnostic). If short to ground: Blue color missing (see RGB Color diagnostic).
18	BLK	C SIG 1 (Composite signal)	Composite video (vertical/horizontal) Synchronizing signal	0.2 V AC average in RGB color diagnostic mode	If open: Picture rolls horizontally, colors still visible. If short to ground: Picture rolls horizontally, colors still visible.
19	GRN	GND SIG 1 (Ground signal)	Ground for color signal	0 V	If open: No change to display. If short to ground: No change to display.
20	PUR	AC-SO (Air conditioner serial out)	Communication signal for climate control unit	——	If open/short: HVAC will not respond to navigation commands.
21	BRN	AC-CLK (Air conditioner clock)	Check signal for climate control unit	——	If open/short: HVAC will not respond to navigation commands.
23	BLU	JOG (Interface dial Jog)	Interface dial operation signal	0—5 V pulses	If open: You cannot operate navigation system If short to ground: You cannot operate navigation system
24	RED	CAN-L (CAN low)	F-CAN bus communication	Pulses 2.5—6 V 2.5 V average (depends on bus traffic)	If open: 1) System Links PCM, and Gauge Control Module both show NG. 2) F-CAN diagnostic = NG. 3) B-CAN diagnostic = NG. 4) Car status CHG (CAN) = 0. 5) Functional Setup, Trip info, FUP & Sampled FL = 0. If short to ground: Same diagnostic conditions as when open, and also sets the following DTCs. • B1168 Gauge Control Module loss of Comm. (Engine) • B1169 Gauge Control Module loss of Comm. (A/T) • B1178 F-CAN communication Circuit error. • U0073 (F-CAN bus off) • U0155 (F-CAN Gauge control module) • U0121 (F-CAN VSA control)
25	GRY*	SH JOG (Interface dial Shield jog)	Shield for interface dial signal	——	——
26	RED	GA-NET ECU BUS— (Display bus negative)	Data bus—	0—5 V pulses 2.5 V average (depends on bus traffic)	If open: Navigation buttons do not work. If short to ground: Hard buttons work OK.

*: The shielded wires have a heat-shrink tube insulating the outside of the wire.
The color of the insulating tube, typically black or dark gray, may not match the color of the wire shown on the circuit diagram.

(cont'd)

System Description (cont'd)

Navigation Unit Inputs and Outputs for Connector C (16P)

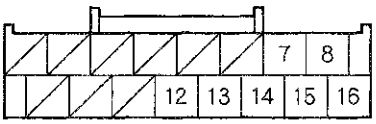

Wire side of female terminals

Navigation Unit Connector C (16P)

Terminal Number	Wire Color	Terminal Name	Description	Voltage (about)	Symptom
7	BLK	RG L+ (Route guidance voice left positive)	Left audio signal of voice guidance, and Voice Recognition (VR) prompts	Audio signal 0.004—0.04 V	If open: If voice activated, radio speakers buzz; if voice off, no effect. If short to ground: If voice activated, radio speakers buzz; if voice off, no effect.
8	GRN	HFL-NAVI MIC+ (HFL mic signal positive)	Microphone output signal positive	4–5 V (navigation TALK button pressed)	If open: microphone signal shown as red in diagnostic screens: System Links and Functional Setup Mic Level. If short to ground: microphone signal shown as red in diagnostic screens: System Links and Functional Setup Mic Level.
12	BRN	STRG SW (Navigation remote switches)	Steering switch output	4–5 V (navigation TALK button pressed) 2.5–3 V (navigation BACK button pressed)	If open: Steering wheel TALK and BACK buttons do not work. If short to ground: Steering wheel TALK, and BACK buttons do not work.
13	GRY*	RG L SH (Route guidance shield)	Shield for No. 7, 14 terminals	0 V	If open: No effect on voice output. If short to ground: No effect on voice output.
14	WHT	RG L GND (Route guidance ground)	Ground for voice guidance, and Voice Recognition (VR) prompts	0 V	If open: No effect on voice output. If short to ground: No effect on voice output.
15	BLK*	HFL-NAVI MIC SH (HFL mic signal shield)	Shield for No. 8, 16 terminals	0 V	If open: No effect on voice control. If short to ground: No effect on voice control.
16	RED	HFL-NAVI MIC— (HFL mic signal negative)	Ground for microphone signal	0 V	If open: microphone signal shown as red in diagnostics: System Links and Functional Setup Mic Level. If short to ground: No effect on voice recognition.

*: The shielded wires have a heat-shrink tube insulating the outside of the wire.
The color of the insulating tube, typically black or dark gray, may not match the color of the wire shown on the circuit diagram.

Navigation Unit Inputs and Outputs for Connector D (5P)

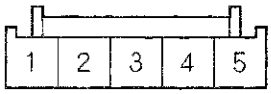

Wire side of female terminals

Navigation Unit Connector D (5P)

Terminal Number	Wire Color	Terminal Name	Description	Voltage (about)	Symptom
1	RED	HFL COMM3 (HFL communication 3)	Communication signal for HFL	——	Solid red HFL icon in Navi System Link
2	WHT	HFL COMM4 (HFL communication 4)	Communication signal for HFL	——	Solid red HFL icon in Navi System Link
3	BLK	HFL COMM1 (HFL communication 1)	Communication signal for HFL	——	HFL icon in Navi System Link changes between red and green
4	GRN	HFL COMM2 (HFL communication 2)	Communication signal for HFL	——	HFL icon in Navi System Link changes between red and green
5	GRY*	HFL COMM SH (HFL communication shield)	Shield for terminals No.1, 2, 3, 4	——	——

*: The shielded wires have a heat-shrink tube insulating the outside of the wire.
The color of the insulating tube, typically black or dark gray, may not match the color of the wire shown on the circuit diagram.

Navigation Unit Inputs and Outputs for Connector E (2P)

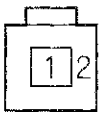

Wire side of female terminals

Navigation Unit Connector E (2P)

Terminal Number	Wire Color	Terminal Name	Description	Voltage (about)	Symptom
1	——	SIG (GPS)	GPS signal	5 V	If open: GPS icon on screen is white, system links screen ANT shows NG. If short to body ground: Same as open.
2	——	SH (GPS)	Ground for GPS signal	0 V	If open: GPS icon on screen is white, system links screen ANT shows NG. If short to body ground: No effect on system.

(cont'd)

System Description (cont'd)

HFL-Navigation-ANC Microphone Inputs and Outputs for 7P Connector

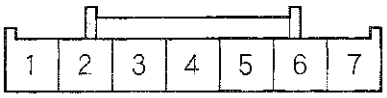

Wire side of female terminals

HFL-Navigation-ANC Microphone 7P Connector

Terminal Number	Wire Color	Terminal Name	Description	Voltage (about)	Symptom
1	BLK	GND (Ground) (G501)	Ground for HFL-navigation microphone	0 V	If open: You can not operate voice recognition. If short to ground: No effect on voice recognition.
2	GRY	MIC− (HFL mic signal negative)	Ground for microphone signal	0 V	If open: microphone signal shown as red in diagnostics: System Links and Functional Setup Mic Level. If short to ground: No effect on voice recognition.
3	BRN	MIC+ (HFL mic signal positive)	Microphone output signal positive	8 V	If open: microphone signal shown as red in diagnostics: System Links and Functional Setup Mic Level. If short to ground: Microphone signal shown as red in diagnostic screens: System Links and Functional Setup Mic Level.
5	LT GRN	HFL MUTE	HFL MUTE signal	0—5 V	If open: You can not operate HFL sound. If short to ground: You can not operate audio sound.
6	PUR	ACC (Accessory)	Power source for accessory	Battery voltage at ACCESSORY (I)	If open: You can not operate voice control. If short to ground: Blows fuse No. 18 (7.5 A) in the driver's under-dash fuse/relay box.
7	WHT	+B (+B Power source)	Continuous power source	Battery voltage	If open: You can not operate HFL and voice control. If short to ground: Blows fuse No. 15 (10 A) in the under-hood fuse/relay box.

Navigation Display Unit Inputs and Outputs for 28P Connector

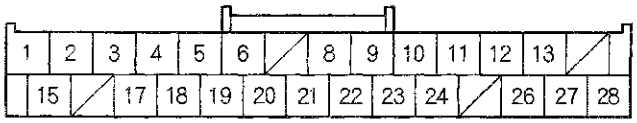

Wire side of female terminals

Navigation Display Unit 28P Connector

Terminal Number	Wire Color	Terminal Name	Description	Voltage (about)	Symptom
1	WHT	+B (+B power source)	Continuous power source	Battery voltage	If open: Screen completely off (no backlight visible). If short to ground: Blows fuse No. 15 (10 A) in the under-hood fuse/relay box.
2	PUR	ACC (Accessory)	Power source for accessory	Battery voltage at ACCESSORY (I)	If open: Display and buttons do not work. If short to ground: Blows fuse No. 18 (7.5 A) in the driver's under-dash fuse/relay box.
3	RED	GA-NET BUS+ (GA-NET bus positive)	Data bus+ GA-Net	0—5 V pulses average 2.5 V depends on bus traffic	If open: Navigation buttons and touch screen do not work. If short to ground: Navigation buttons do not work.
4	GRY*	GA-NET BUS SH (GA-NET)	Shield for No. 3, 17 terminals	0 V	If open: No change to display. If short to ground: No change to display.
5	GRN	GA-NET ECU BUS+ (GA-NET) (Display bus positive)	Data bus+ GA-Net	0—5 V pulses average 2.5 V depends on bus traffic	If open: Navigation buttons do not work. If short to ground: Navigation buttons do not work.
6	GRN	SECURITY+	Security signal to rear screen	0 V	If open: The security system will set, and will not trip when screen is removed. If short to ground: The security system will set, and will not trip when screen is removed.
8	WHT	R SIG 1 (Red signal)	Red color signal	0.7 V AC	If open: Red color missing (see RGB Color diagnostic). If short to ground: Red color missing (see RGB Color diagnostic).
9	RED	G SIG 1 (Green signal)	Green color signal	0.7 V AC	If open: Green color missing (see RGB Color diagnostic). If short to ground: Green color missing (see RGB Color diagnostic).
10	BLK	GND (Ground)	Ground for display unit	0 V	If open: No change to display. If short to ground: No change to display.

*: The shielded wires have a heat-shrink tube insulating the outside of the wire.
The color of the insulating tube, typically black or dark gray, may not match the color of the wire shown on the circuit diagram.

(cont'd)

System Description (cont'd)

Navigation Display Unit 28P Connector

Terminal Number	Wire Color	Terminal Name	Description	Voltage (about)	Symptom
11*1	GRY*2	CAMERA SH (Shield camera)	Shield for No. 12, 13, 26, 27 terminals	0 V	If open: No change to rearview camera image. If short to ground: No change to rearview camera image.
12*1	BLK	CAMERA GND (Ground camera)	Ground for camera signal	0 V	If open: No change to rearview camera image. If short to ground: No change to rearview camera image.
13*1	WHT	CAMERA (VCC supply)	Power source for rearview camera	8 V	If open: When put into reverse, the navigation screen goes black (backlight still operation) If short to ground: When put into reverse, the navigation screen goes black (backlight still operative).
15	GRY	ILL+ (Illumination positive)	Parking light on signal from dash and console lights	Battery voltage if lights on: otherwise 0 V	If open: When brightness=Auto, night mode for the display is inoperative when lights on. If short to ground: Blows fuse No. 6 (7.5 A) in the passenger's under-dash fuse/relay box.
17	GRN	GA BUS— (GA-NET)	Data bus— GA-Net	0—5 V pulses average 2.5 V depends on bus traffic	If open: Navigation buttons do not work. If short to ground: Hard buttons work OK.
18	GRY*2	SH GA-NET ECU BUS (Shield ECU bus)	Shield for display bus terminal No. 5, 19	0 V	If open: No change to display. If short to ground: No change to display.
19	RED	GA-NET ECU BUS— (Display bus negative)	Data bus— GA-Net	0—5 V pulses average 2.5 V depends on bus traffic	If open: Navigation buttons and touch screen do not work. If short to ground: Hard and touch buttons work OK.
20	YEL	SECURITY—	Security signal from CD changer	0 V	If open: The security system will set, and will not trip when screen is removed. If short to ground: The security system will set, and will not trip when screen is removed.
21	BLU	GND SIG 1 (Ground signal)	Ground for color signal	0 V	If open: No change to display. If short to ground: No change to display.
22	YEL	B SIG 1 (Blue signal)	Blue color signal	0—1 V AC	If open: Blue color missing (see RGB Color diagnostic). If short to ground: Blue color missing (see RGB Color diagnostic).
23	BRN	C SIG 1 (Composite signal)	Composite video (vertical/horizontal) synchronizing signal	0.3 V AC	If open: Picture rolls horizontally, colors still visible. If short to ground: Picture rolls horizontally, colors still visible.
24	BLK*2	SH SIG 1 (Shield signal)	Shield for No. 8, 9, 21, 22, 23 terminals	0 V	If open: No change to display. If short to ground: No change to display.
26*1	GRN	RC VCC (Video camera)	Video signal for rearview camera	0.3 V	If open: No change to rearview camera image. If short to ground: No change to rearview camera image.
27*1	RED	RC GND (Ground camera)	Ground for rearview camera signal	0 V	If open: No change to rearview camera image. If short to ground: No change to rearview camera image.
28*1	BRN	CAMERA ADPT (Adaptive camera)	Control signal for rearview camera	0 V	If open: No change to rearview camera image. If short to ground: No change to rearview camera image.

* 1: With optional rearview camera
* 2: The shielded wires have a heat-shrink tube insulating the outside of the wire.
The color of the insulating tube, typically black or dark gray, may not match the color of the wire shown on the circuit diagram.

Interface Dial Inputs and Outputs for 5P Connector

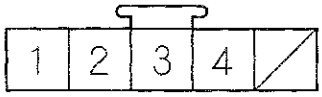

Wire side of female terminals

Interface Dial 5P Connector

Terminal Number	Wire Color	Terminal Name	Description	Voltage (about)	Symptom
1	WHT	JOG (jog)	Interface dial operation signal	0—5 V pulses	If open: You can not operate navigation system. If short to ground: You can not operate navigation system.
2	BLK*	SH JOG (Shield jog)	Shield for interface dial signal	——	——
3	BLK	GND (Ground)	Ground for interface dial	0 V	If open: You can not operate navigation system. If short to ground: You can not operate navigation system.
4	PUR	ACC (Accessory)	Power source for interface dial	Battery voltage at ACCESSORY (I)	If open: You can not operate navigation system. If short to ground: Blows fuse No. 18 (7.5 A) in the driver's under-dash fuse/relay box.

*: The shielded wires have a heat-shrink tube insulating the outside of the wire.
The color of the insulating tube, typically black or dark gray, may not match the color of the wire shown on the circuit diagram.

Circuit Diagram

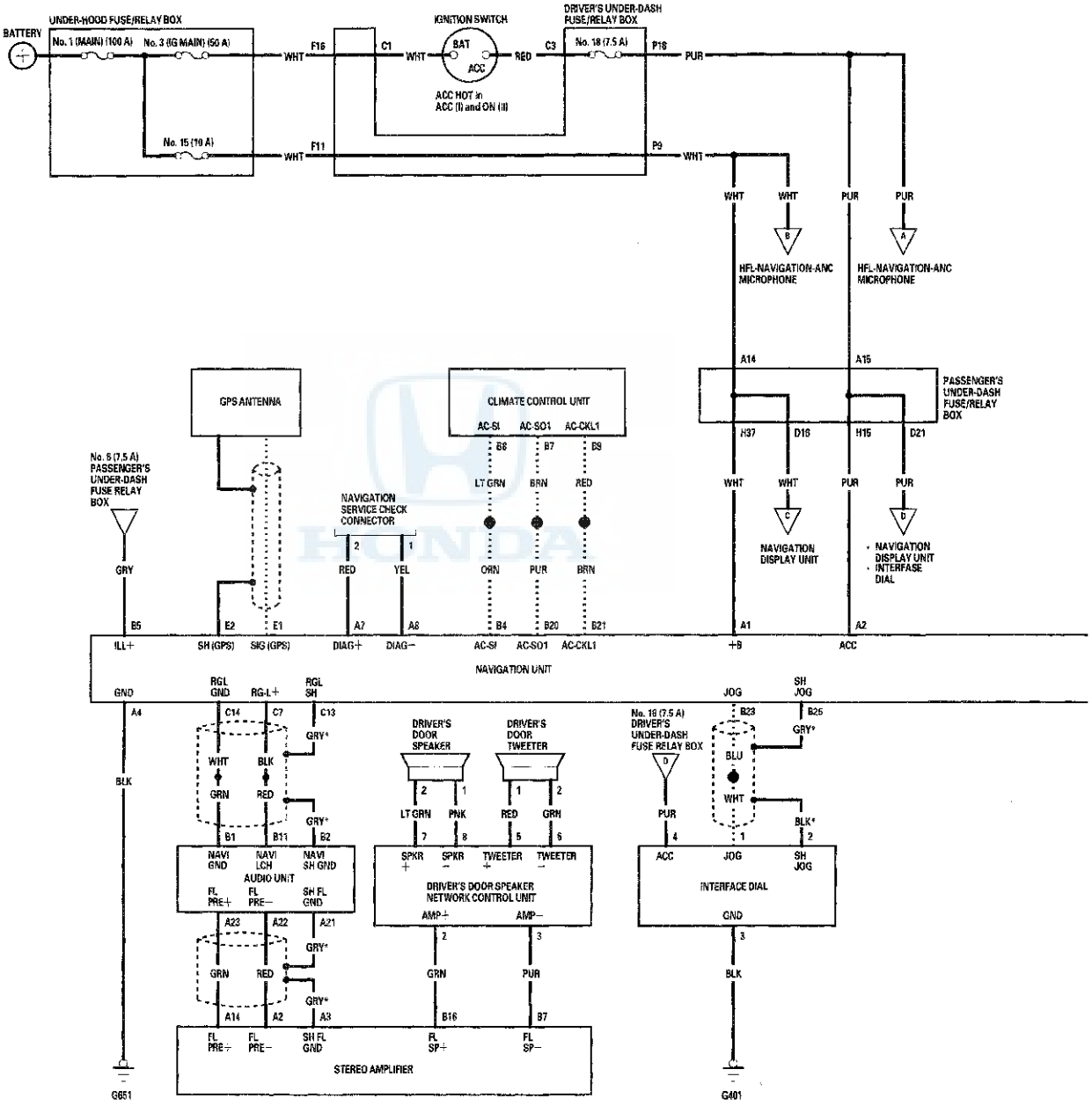

*: The shielded wires have a heat-shrunk tube insulating the outside of the wire. The color of the insulating tube, typically black or dark gray, may not match the color of the wire shown on the circuit diagram.

▸▸▸▸▸▸▸▸▸▸▸▸ : Other communication line

- - - - - - - - - : Shielding

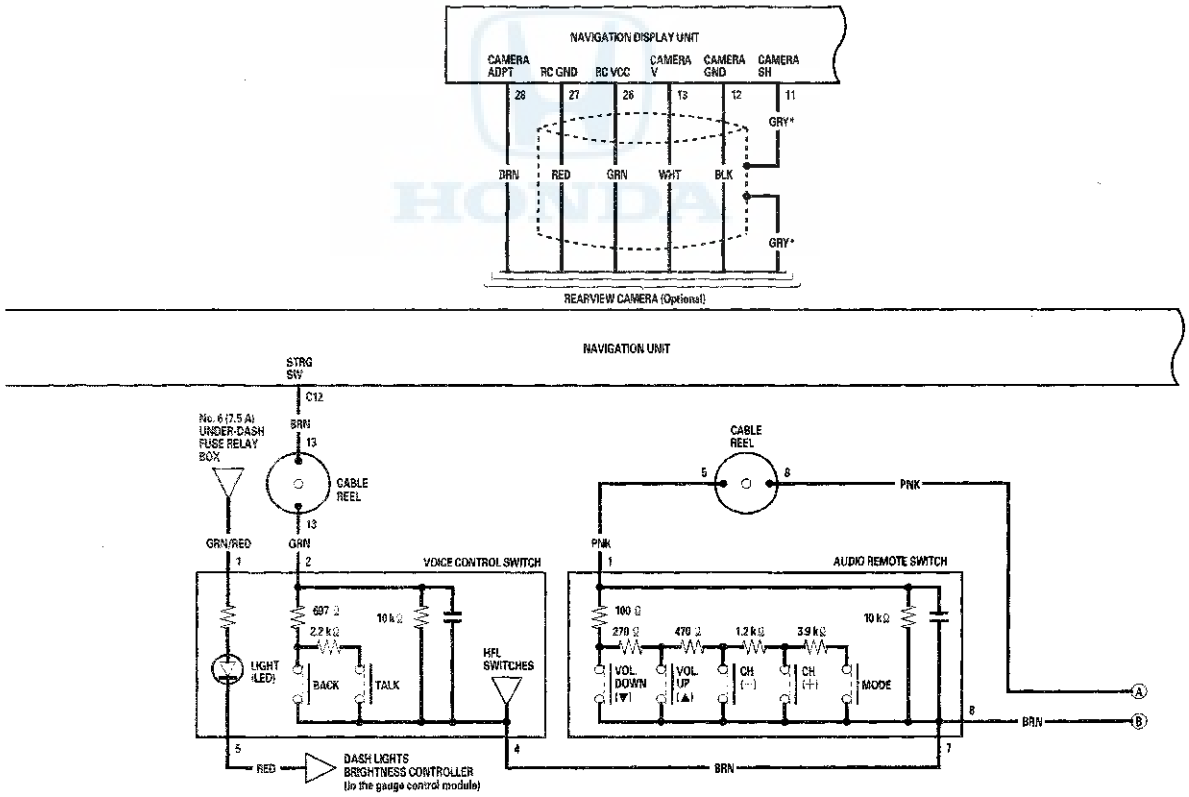

(cont'd)

Circuit Diagram (cont'd)

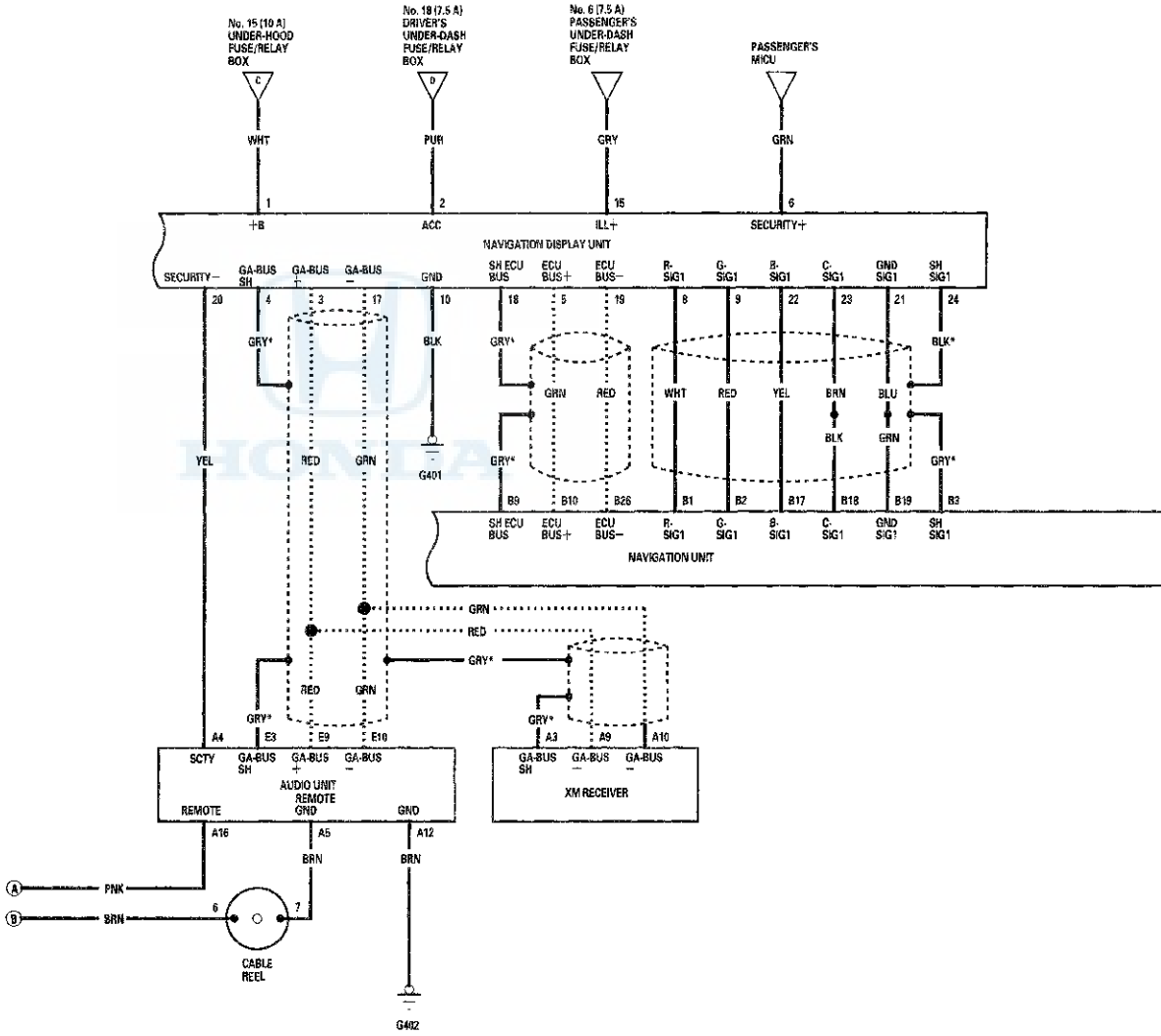

*: The shielded wires have a heat-shrunk tube insulating the outside of the wire. The color of the insulating tube, typically black or dark gray, may not match the color of the wire shown on the circuit diagram.

- - - - - - - - - : CAN line

. . . . . : Other communication line

- - - - - - - - - : Shielding

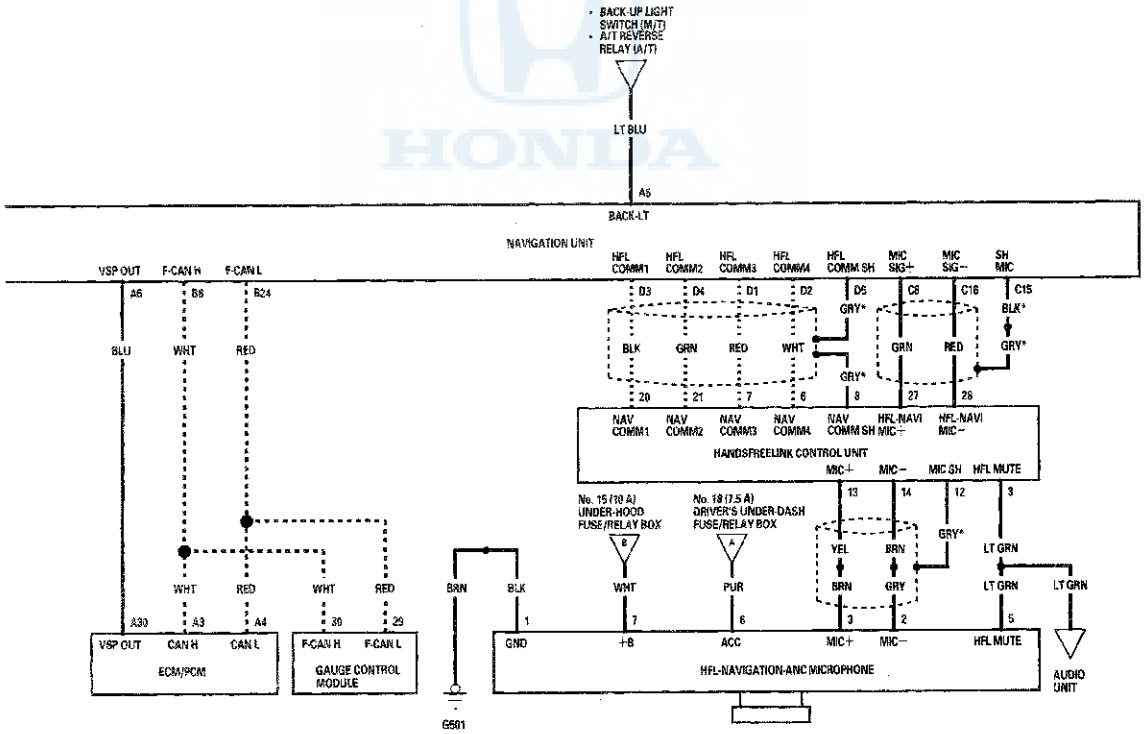

System Diagnostic Mode

Start-up procedure and Diagnostic Menu

There are two ways to enter the diagnostic mode:

Method 1:
Start the vehicle. When the globe screen appears, connect the SCS service connector (see page 23-239) to the navigation service connector located behind the navigation unit in the trunk. The screen changes to the System Links screen and automatically begins running the self diagnostic. See the System Links section for more information.

NOTE: When finished troubleshooting, make sure to remove the SCS service connector.

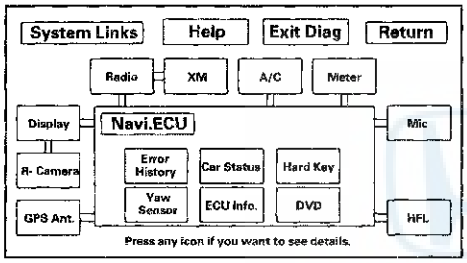

Method 2:
Start the vehicle, and at the disclaimer screen use the navigation display hard buttons as described below:

Make sure the battery is in good condition then press and hold the three buttons MAP/GUIDE, MENU, and CANCEL, for about 3 seconds. The display screen goes directly to the Select Diagnosis Items menu shown below.

- Self-Diagnosis Mode (runs the automatic diagnosis of the navigation system)
- Detail Information & Setting (allows you to manually diagnose the navigation system)

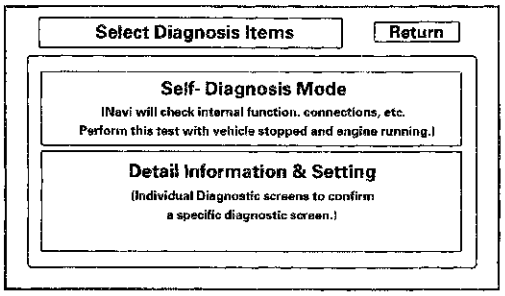

System Links

1. Enter this screen by connecting the SCS connector or by selecting Self Diagnosis Mode from the navigation screen main menu. The message at the bottom of the screen flashes indicating the diagnostic is running. Make sure you enter the audio anti-theft code.

   NOTE:
   - The system cannot complete a full diagnosis unless the engine is running.
   - DTC 1501 and/or 2703 can be stored when the ignition switch is at ACCESORY (I). With the ignition switch is in ACCESORY (I), the A/C unit is turned off and the navigation unit loses communication and stores DTCs. Therefore, there is a possibility that the system is normal even though 2703 is stored. Check system links with the engine running, and if it appears normal, the system is OK at this time.

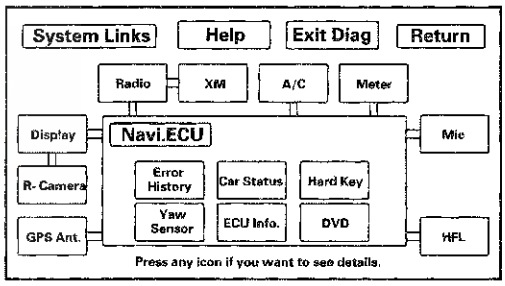

2. Rotate the interface dial to select the icon you want to diagnose. Push in the selector to see the details of that diagnostic function.

The System Links function runs automatically and displays a flashing message at the bottom of the screen reminding you to have the engine running for the test. The diagnostic tests the following:

- Most of the wires connecting the navigation components shown in the block diagram.
- The results from the various components shown in the block diagram.
- The microphone is tested by listening to the bong sound produced by the navigation unit from the speakers when the diagnostic is started. This requires that the audio system be operating normally.

When the diagnostic finishes, the icons turn different colors based on their test status. The color definitions are shown below and can also be seen by selecting Help on the System Links screen.

The indication on the screen may not change until you exit and reenter the Self-Diagnosis mode. In some cases, you may have to restart the engine for the indication to change. After you repair the affected component or harness, repeat this diagnostic.

Explanation of each icon

Each icon color is explained in the table.

Icon Colors	Description
Green	The system run a diagnosis and the results are OK.
Red	Errors that require replacement of hardware or harness. Examples are connection error or memory diagnosis errors. Troubleshoot for DTCs.
Yellow	Errors that does not require hardware replacement, such as an open display cover, an incorrect DVD, leaving the ignition switch in ACCESSORY (I), or because of a missing accessory, like the rearview camera.
White	The diagnosis is running. The screen functions are locked out while the diagnosis runs.
Gray	The system cannot automatically check this function. You have to select the diagnosis item and manually do additional testing, like checking the navigation buttons in the Hard Key test. When you complete the Hard Key test and return to the System Links menu, the gray icon turns green.

NOTE: By selecting the HELP icon, you can see a description for each color.

(cont'd)

System Diagnostic Mode (cont'd)

Icon Color Information

Icon	Icon Color				
	GREEN	RED	YELLOW	WHITE	GRAY
Display	Result of Connection under the Display diagnosis menu is OK.	Result of Connection under the Display diagnosis menu is NG.	———	Executing (Not completed)	———
Radio	Result of Connection under the Radio diagnosis menu is OK.	Result of Connection under the Radio diagnosis menu is NG.	———	Executing (Not completed)	———
XM	Result of Connection under the XM diagnosis menu is OK.	Result of Connection under the XM diagnosis menu is NG.	———	Executing (Not completed)	———
GPS Ant.	All result of Antenna and Receiver in NAVI ECU is OK.	Any result of Antenna and Receiver in NAVI ECU is OK.	———	Executing (Not completed)	———
R-Camera	Result of Connection under the R-Camera diagnosis menu is OK. (YOP)	Result of Connection under the R-Camera diagnosis menu is NG. (YOP)	Result of the Connection under the R-Camera diagnosis menu is NG. (YOP)	Executing (Not completed)	———
A/C	Result of Connection under the Aircon diagnosis menu is OK while Ignition is ON.	Result of Connection under the Aircon diagnosis menu is NG while Ignition is ON*.	While Ignition is OFF.	Executing (Not completed)	———
Meter (F-CAN)	All result of F-CAN related units are OK.	Any result of F-CAN related units are NG.	———	Executing (Not completed)	———
HFL	Result of Connection under the HFL diagnosis menu is OK.	Result of Connection under the HFL diagnosis menu is NG.	———	Executing (Not completed)	———

*: DTC 2703 can be stored when the ignition switch is in ACCESSORY (I). With the ignition switch in ACCESSORY (I), the climate control unit is turned off and the navigation unit loses communication and stores DTCs. It is possible that the system is normal with DTC 2703 stored. Check the system links with the engine running, and if it shows normal, the system is OK at this time.

Icon	Icon Color				
	GREEN	RED	YELLOW	WHITE	GRAY
Mic	The microphone detects the sound "Pi-Pi-Pon" at the system link menu.	The microphone could not detects the sound "Pi-Pi-Pon" at the system link menu.	———	Executing (Not completed)	———
ECU Info.	Both V-RAM or D-RAM is OK, and all Program Flash, Serial No., Model is available, and the DVD lid is closed.	Either the V-RAM or D-RAM is NG, or any of the Program Flash, Serial No., Model is unavailable.	DVD lid is opened	Executing (Not completed)	———
Hard Key	All buttons are pressed and are detected under Hard key menu.	All buttons are not pressed or pressed but not detected under Hard key menu, or exit from Hard key menu without the button not detected.	———	———	Until changing to Hard key menu.
Error History	———	———	Hard Error or Soft Error is detected under Error History menu.	Executing (Not completed)	Hard Error or Soft Error is not detected under Error History menu.
DVD	DVD mechanism is normal and the proper DVD is installed.	———	Improper DVD is installed, or DVD is not installed, or can not identify software version from the DVD or internal mechanism failure.	Executing (Not completed)	———
Yaw Sensor	Result of the Yaw Sensor diagnosis menu is OK.	Result of the Yaw Sensor diagnosis menu is NG.	Result of the Zero Point Output under the Yaw Sensor diagnosis menu is NO CHECK.	Executing (Not completed)	———
Car Status	———	———	———	———	Check these systems manually.

(cont'd)

System Diagnostic Mode (cont'd)

Factory diagnostic screen In Line Diag

NOTE: If the vehicle left the factory in the factory diagnostic mode, or if the navigation unit is replaced you will see this screen every time you turn on the ignition.

When a navigation control unit is powered up for the first time at the factory or after replacement with a new or remanufactured navigation unit, the factory diagnosis screen (In Line Diag) appears. Normally the factory does the steps necessary to verify proper operation and terminate the factory diagnostic. Until the proper confirmation sequence is done, the screen appears every time the vehicle is started.

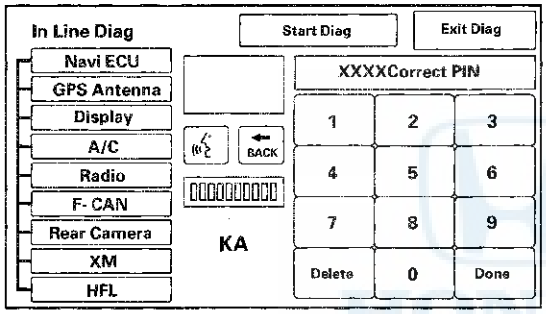

Follow the steps below to prevent the screen from showing up in the future:

- Press and hold the buttons MENU, MAP/GUIDE, and CANCEL for about 3 seconds. The Select Diagnosis items screen appears.
- Press and hold the MAP/GUIDE button for 5—10 seconds. A screen with a Complete button, appears.
- Press complete, then Return, and then shut the key off for 5 seconds. Do not disconnect the battery during this period as the unit is saving the setting to the SRAM memory. The In Line Diag should not appear again.
- Restart the vehicle, and confirm normal operation by completing the TQI of the Navigation System Service Bulletin.

Detailed Information & Settings

These sections allows you to run a specific diagnostic and allows additional setting choices for some screens that are not shown when selecting an icon from the System Links screen.

When you select the menu item Detail Information & Setting menu, the main diagnosis menu is displayed.

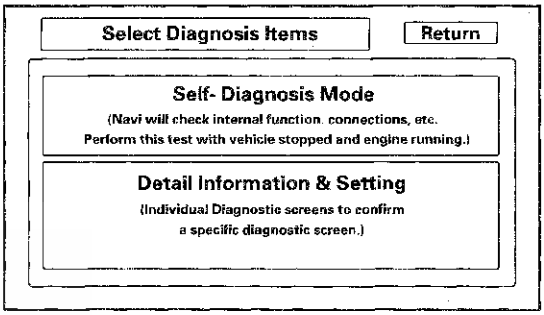

Monitor Check

Overview of display unit

- The display unit communicates with the navigation unit over its own GA-Net bus. Information sent by the navigation unit to the display unit includes commands to control the LCD back light.
- The security system protects the navigation display unit by daisy-chaining the security signal through it, and then passing the signal to the audio unit.
- The illumination input from the gauge brightness control provides back lighting for the buttons surrounding the screen.

These screens allow you to troubleshoot the display unit. Select the item you want to troubleshoot, and follow the diagnostic instructions.

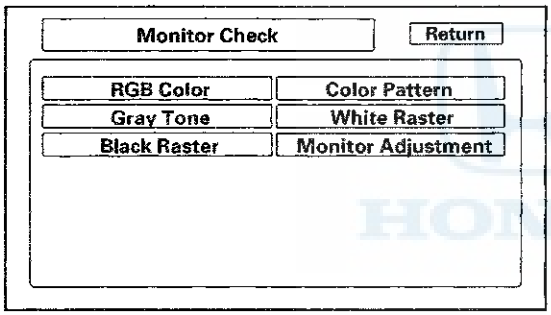

RGB Color
This screen verifies that the display unit is receiving the video (R, G, B and Composite sync) signals properly. The three primary colors should all appear without distortion. The combination of all three should produce a central white section. If any of the colors are missing, troubleshoot for the color signal (see page 23-220). If the picture has lines in it or scrolls horizontally, or vertically, troubleshoot for a Composite sync problem (see page 23-222).

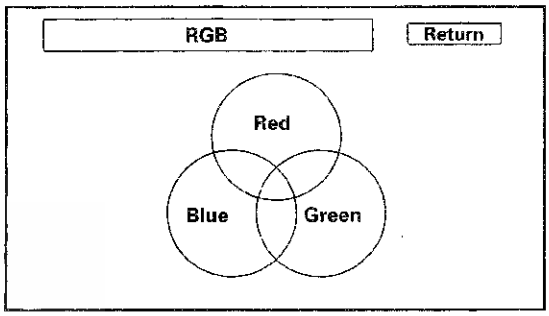

Gray Tone
This screen diagnoses problems with contrast. You should be able to see the changes from bar to bar across the scale. It is normal for the two bars on either side to appear the same. If you can't see changes from bar to bar, replace the navigation unit.

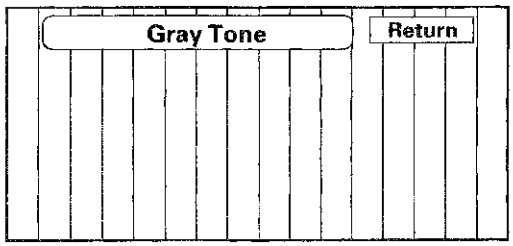

(cont'd)

System Diagnostic Mode (cont'd)

Black Raster
This diagnostic screen checks for pixels that may be stuck on. The entire display must be black. If pixels are stuck on, replace the navigation unit.

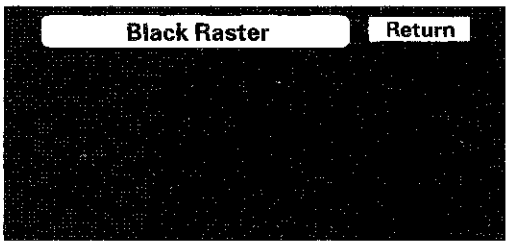

Color Pattern
The chart below shows the colors being used for the map and menu screens. This is for factory use only. To check the color signal, use the RGB Color diagnostic found under the Monitor Check.

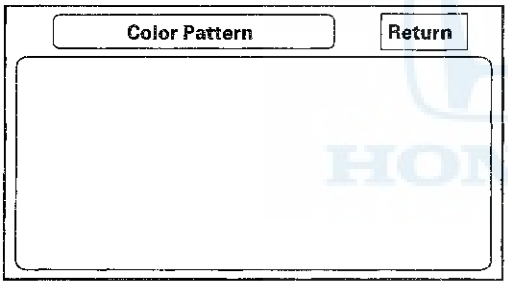

White Raster
This diagnostic screen checks for pixels that may be dead (off). The entire display must be white. If there are dead pixels, replace the navigation unit.

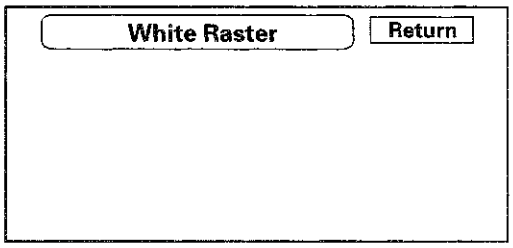

Monitor Adjustment
This allows you to center the navigation display. Use the joystick to move the picture up/down or left/right. It is unlikely that you will ever need to adjust the monitor position. The Default button will reset the display position to factory specifications.

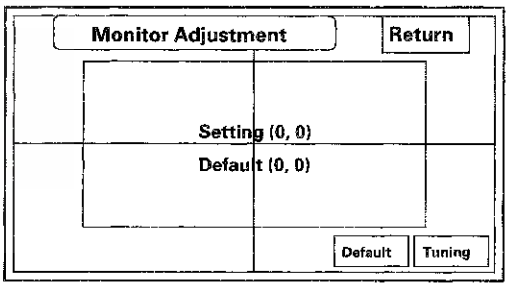

Unit Check (Quick Check)

Some of the tests and screens that are displayed under the Unit Check are different from the more detailed checks listed in other areas of this service manual.

To start the test, select the item you want to check.

- Display
- Radio
- GPS
- ECU Info.
- Rear Camera
- PC Card Info.
- Hard Key
- Yaw Sensor
- DVD
- Aircon
- HFL
- XM

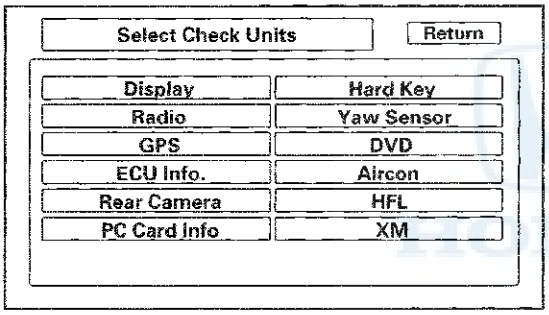

Display
This diagnostic does additional checks on the communication bus between the navigation unit and the navigation display unit. In addition, this test checks the internal electronic functions.

- When the connection is NG, first check for loose terminals at the navigation unit and the display unit connections. Next check for an open or short in the communication line between the navigation unit and the display unit. If the line has an open or short, replace the affected shielded harness.
- If the ROM or RAM is NG, replace the display unit.
- The version represents the software version in the display.

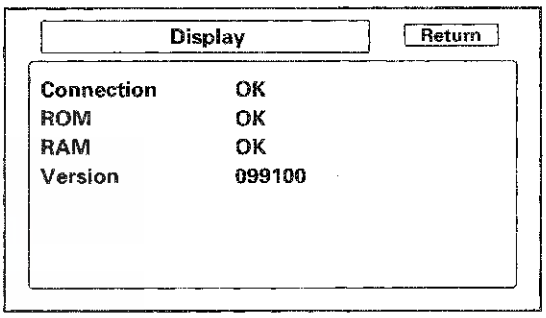

(cont'd)

System Diagnostic Mode (cont'd)

Radio
If NG is indicated, check for loose audio unit connectors.

NOTE: If the XM link appears red, but the radio link appears green in the navigation system link, refer to audio system symptom troubleshooting.

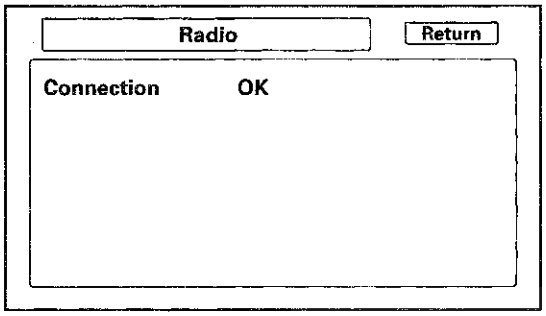

GPS
If GPS indicates NG (ANT), then check the entire GPS antenna wire from the navigation unit to the antenna. If the wire is crushed or damaged, try a known-good antenna. If the diagnostic then reads OK, replace the original GPS antenna. If the diagnostic still reads NG (ANT), replace the navigation unit.
Select information to see the GPS satellite details.

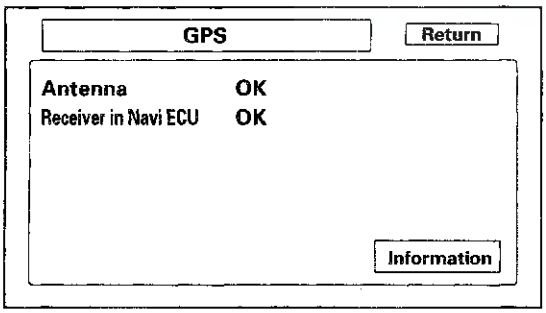

ECU Info.
This screen looks for problems in the navigation unit. When you initiate this diagnosis, the navigation unit may freeze or delay up to a minute while the diagnosis runs.

NOTE: Do not try to end this diagnostic by pressing OK or Mem clear before it finishes, otherwise the system may reboot.

- If V-RAM or D-RAM is NG, replace the navigation unit.
- DVD lid displays the state of DVD Lid of navigation unit.
- Program Flash: Displays the version of the navi software in memory.
- Program on DVD: If displayed, this value represents the version of the navi software on the navi DVD.
- DVD version represents the database version on the DVD. You can find this information in either the Setup Screen Version, or in the Diagnostic Screen Version.
- Serial No. should be the same as the serial number found on the underside of the navigation unit. You need this number to obtain the security code from the Interactive Network (iN) system.
- The Mem Clr is for factory use and should not be used unless instructed by the factory.
  Selecting this will clear the customer's settings, personal information, GPS orbital data, and anything else stored in memory.

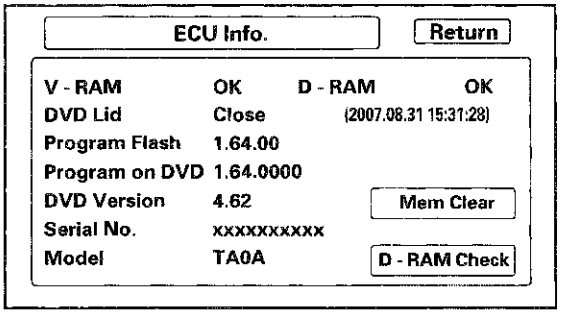

Rear Camera (Optional)

- If the optional rearview camera is connected, it will be displayed as OK.
- It displays OFF when the optional rearview camera is not connected.

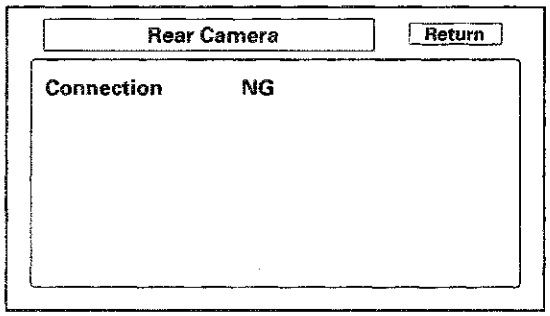

PC Card info.

There is no PC Card in the PC slot, and the screen should display, PC Card is not inserted.

NOTE: Do not insert any card or object into the slot.

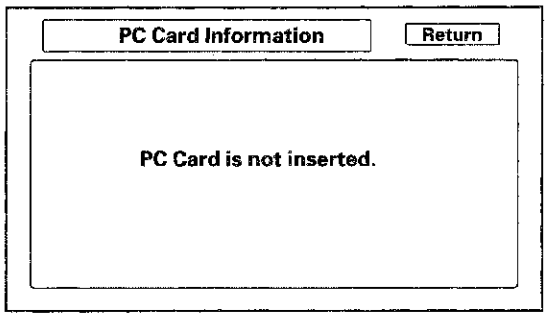

If the factory provides a PC card and instructs you to insert it, the screen displays the Manufacturer, and Product Name as shown in the following screen.

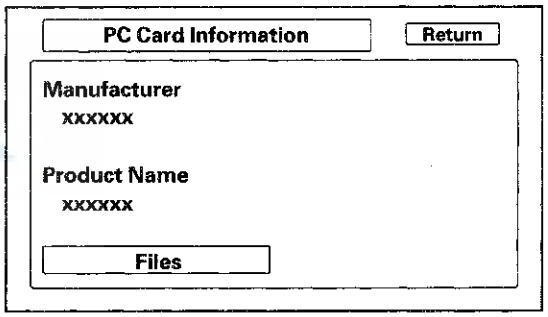

(cont'd)

System Diagnostic Mode (cont'd)

Hard Key
This diagnostic tests the interface dial and the buttons that surround it. For this model, the interface dial and buttons do not use the GA-Net bus for communications.

To complete the test, touch each button on the vehicle's control panel, and move the interface dial to each indicated position. As each function is tested, the corresponding button on the display should highlight.

To exit, push in and hold the selector knob.

NOTE: You cannot use the onscreen return button to exit this function

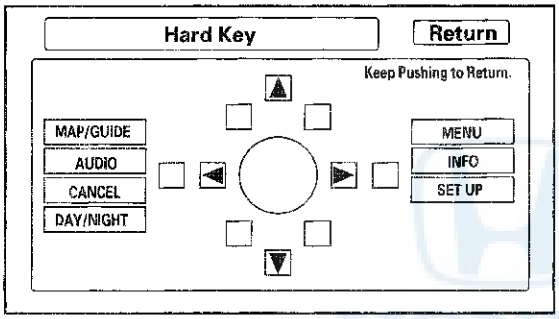

Yaw Sensor
This screen gives a quick test of the yaw sensor functionality based on the two voltages Sensor and Offset. For more information see the Yaw Rate Diagnostic.

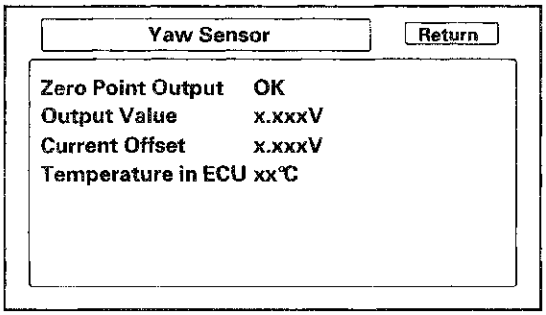

DVD
This diagnostic tests the navigation DVD reader.

NOTE: If this test fails, remove the navigation DVD, clean it, and retest before ordering a new DVD.

DVD	Return
Error Detail	-
Version	20050404
Maker ID	0x01
Navi Platform	0x01

Aircon
This diagnostic tests the climate bus connection (AC-SI and AC-SO) between the navigation unit and climate control unit. Make sure the engine is running for this test.

Aircon	Return
Connection	OK
ignition	OK

HFL
This checks the 4 wire communication bus between the HFL and the navigation unit.

HFL	Return
Connection	OK

(cont'd)

System Diagnostic Mode (cont'd)

XM

- This checks the GA-NET Bus line to the XM receiver.
- When connection is shown with NG, check the connection between XM receiver and audio unit.

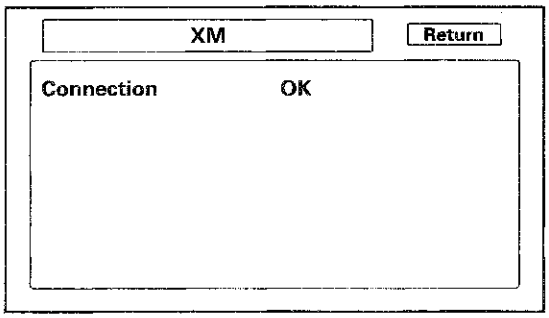

Functional Setup

Select the item you want to check.

- Save Users Memory
- Demo Mode
- Mic Level

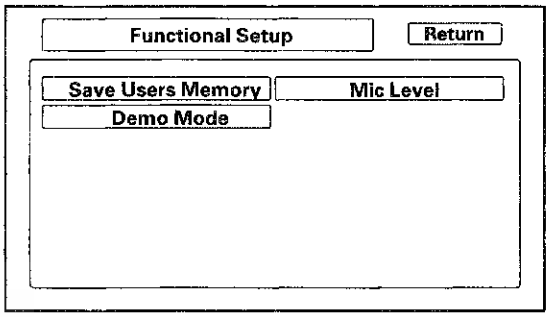

Save Users Memory

When replacing the navigation unit, this function allows the dealer to transfer the customer's personal data to the new navigation unit. The transferred information includes their Setup settings, and personal addresses. The dealer inserts a PC card to the navigation unit, and then selects the Save Users Memory function. The two functions in this diagnostic screen are EXPORT and IMPORT. EXPORT saves the customer's data to the PC card, and IMPORT moves the PC card files to the new navigation unit.

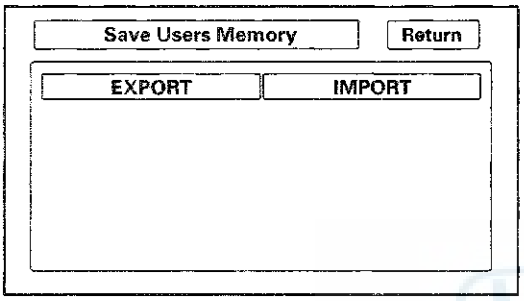

Before starting this function, see the PC Card FAQs for information regarding PC cards, and how to use this function.

1. Select the EXPORT button to move the customer's data from the original navigation unit to the PC card. Select YES on the Export User Data Confirmation screen. The process takes only a couple of seconds. The system stores two files on the card.

   NOTE: If the EXPORT button is grayed out, check the PC card's edge connector, and the pins inside the navigation unit (with a flashlight) for damage.

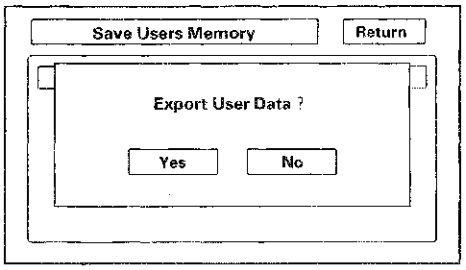

2. After installing the customer's original DVD in the new navigation unit, allow the system to boot up. Insert the PC card in the new navigation unit and enter the Save Users Memory in the navigation system diagnostic mode.

3. Select the IMPORT button to move the two files stored by the Export process from the PC card to the new navigation unit. Select YES on the Import User Data Confirmation screen. When the transfer is finished (a few seconds) the system automatically reboots. After the system reboots, remove the PC card from the PC card slot.

   NOTE: If the IMPORT button is grayed out, check if the Model and the Program Flash shown on the Version screen are the same for the two navigation units.

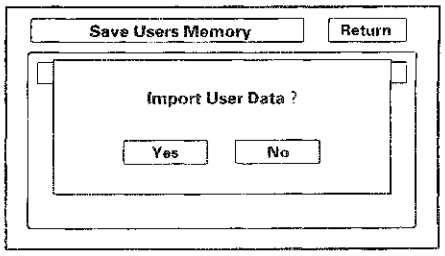

(cont'd)

System Diagnostic Mode (cont'd)

Demo Mode

This screen is for factory use only, and should always be set to OFF. Occasionally the DEMO setting is turned ON when vehicles are being used at Auto Shows or similar events. Turning this feature on, allows the navigation system to automatically follow a route to a destination when the vehicle is stationary. The Speed changes the speed of the demo mode.

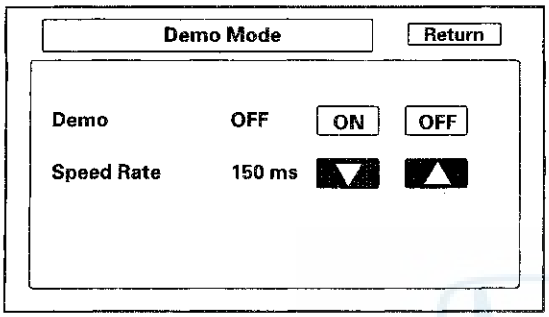

Mic Level

This diagnostic allows you to independently test the microphone and the navigation TALK and BACK buttons. They are used to activate the voice control system. The microphone is located near the map light in the roof console. The microphone can now isolate the driver's voice even when there is noise or other conversations in the vehicle. To properly check the microphones, make sure you are sitting in the driver's seat.

- Press the navigation TALK button on the steering wheel, wait unit you hear a beep, and in a normal voice say "testing". The TALK indicator on the screen should momentarily turn green, and the text Now Recording... should appear in yellow. If the talk indicator shown on the screen does not briefly turn green, check the wiring from the steering wheel navigation TALK button to the navigation unit. If there is no Mic Level movement when you speak, then you should check the wires running from the microphone in the roof console to the HandsFreeLink control unit and the navigation unit. If the wires are OK, the microphone must be faulty; replace the microphone located in roof console (see page 23-242).
- Press the navigation BACK button on the steering wheel. This should cause the Cancel indicator on the screen to momentarily turn green. If it does not briefly turn green, check the wiring from the steering wheel navigation BACK button to the navigation unit.

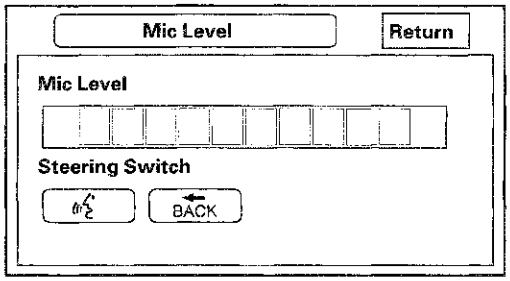

F-CAN System Link

F-CAN (Fast Controller Area Network) passes information between processors on the network. The F-CAN network uses a communication protocol that transmits data at 500 Kbps.

- If the diagnostic screen below reads NG with the ignition switch is in ON (II), then diagnostic trouble codes (DTCs) for the F-CAN can be retrieved with the HDS (Honda Diagnostic System). The data displayed in the ID boxes is irrelevant.
- For more details on troubleshooting the F-CAN, refer to the multiplex integrated control system and the PGM-FI system.

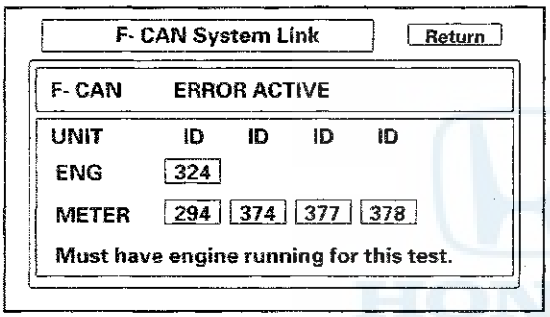

GPS Information

This screen shows the current status of GPS reception. The circular diagram shows the current location of the GPS satellites (yellow numbers) as they would appear in the sky. The outer circle represents the horizon (0 degrees elevation). The middle and inner circles represents 30 and 60 degrees respectively. The very center of the diagram (90 degrees elevation) is directly overhead. Nearby obstructions, like tall buildings will block satellites in that direction. That is why it is necessary to be in an open area to effectively troubleshoot GPS reception issues. The satellite numbers shown on the diagram correspond to the PRN number in the GPS Details screen. There are always at least 24 active GPS satellites in orbit. Because satellites fail, and have to be removed from service, spares are always parked in orbit, ready to be activated. This is why the PRN (satellite ID number) can be greater than 24.

NOTE: When you use this screen for troubleshooting, park the vehicle outside, away from buildings, tall trees, and high-tension wires for at least 10 minutes with the engine running.

- The Number of Satellites box shows the number of acquired satellites (maximum of 12). It should contain three or more icons. If not, troubleshoot for GPS icon is white or not shown (see page 23-226).
- The Current Position shows latitude, longitude, and elevation (in feet). If there are less than four satellites, the elevation can be grossly inaccurate.
- The Date/Time field shows the current date, and also a time that includes daylight savings and other offsets entered by the customer in Setup screen 2 Adjust Time Zone/Clock.

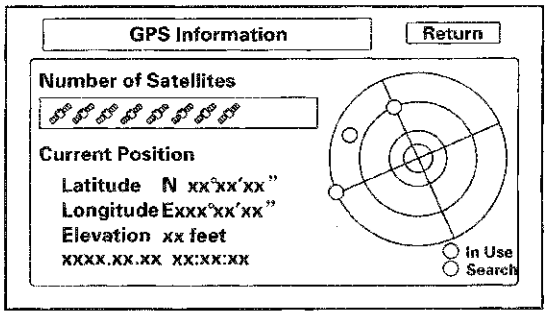

NOTE: Pressing the map/guide button displays the satellite number on each circle.

(cont'd)

System Diagnostic Mode (cont'd)

GPS Detail

By pressing and holding the MENU button for 2 seconds, a GPS Detail screen appears. This screen displays real time incoming satellite positional data when the vehicle is outside in the open. The information shown on this screen is for factory use.

NOTE: The date shown in an example only.

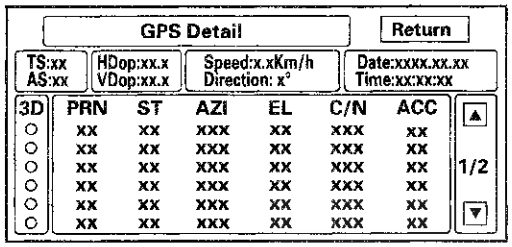

- The box TS/AS and H Dop/V Dop is for factory use.
- The Speed and Direction information is updated in real time when driving.
- The Date/Time Information is the same as in Setup screen 2 Adjust Time Zone/Clock.
- If the 3D icon is shown above the yellow dots, this implies that at least four satellites are available for map positioning, and the GPS indicator on the map screen will be green. See the Global Positioning System detailed explanation in the System Description.
- If the row of data in the table below begins with a yellow dot, the AZI and EL fields can be used to locate each satellite on the circular GPS diagram (see prior screen).

NOTE: The table of values define the terms at the top of the columns in the GPS Detail screen.

Column	Description	Problem indication
3D	Active satellites (Yellow Dot)	If 3D or 2D is missing when the vehicle is parked outside, follow GPS icon is white or not shown troubleshooting (see page 23-226).
PRN	The satellite ID number	
ST	The status: 0 = cannot view or searching, 2 = acquiring	If all 0, then, do GPS icon is white or not shown troubleshooting (see page 23-226).
AZI	Azimuth, the angle (0—360) clockwise from north	
EL	Elevation from the horizon (90 deg is overhead)	
C/N	N/A	Normal signal is 49-52, no signal: 27-33
ACC	N/A	
△ 1/2 or 2/2 ▽	Shows view of all satellites in two screen views 1/2 or 2/2	

Yaw Rate

This diagnostic checks the yaw rate sensor in the navigation unit. This device detects when the vehicle turns, and repositions the vehicle position icon on the map screen. For more detailed information, see the yaw rate sensor theory of operation under System Description (see page 23-145).

- Sensor indicates the voltage output from the yaw rate sensor. It should indicate about 2.500 V when the vehicle is stopped.
- Offset is the reference voltage or standard within the yaw rate sensor. It also should indicate about 2.500 V when the vehicle is stopped.
- A sensor output voltage LOWER than the Offset voltage indicates that the vehicle is turning to the right.
  A sensor output voltage HIGHER than the Offset voltage indicates that the vehicle is turning to the left.
- The yaw rate offset, and sensor should both indicate about 2.500 V when the vehicle is stopped. If either reads zero, or 5.000 V, replace the navigation unit.
- The yaw rate offset and sensor should be within +/−0.01 V of each other when the vehicle is stopped. The sensor value should change relative to the offset as the vehicle turns while driving. If not, replace the navigation unit.

Example: Vehicle stopped

Normal		**Abnormal**	
Offset	2.526 V	Offset	2.526 V
Sensor	2.516—2.536 V	Sensor	2.623 V

Example: Vehicle turning

Normal		**Abnormal**	
Offset	2.526 V	Offset	2.526 V
Sensor	2.678 V (left turn) 2.478 V (right turn)	Sensor	2.623 V (no change on turns)

- Sensitivity study represents the status of the internal tuning function. At initialization, this value starts at 6 and increases to 10 as the internal correction values become more accurate.
- The settings CCW Cal Factor, CW Cal Factor, and Set are for factory use only. THIS SHOULD NEVER BE ADJUSTED.
- For detailed analysis of the yaw rate select tuning.

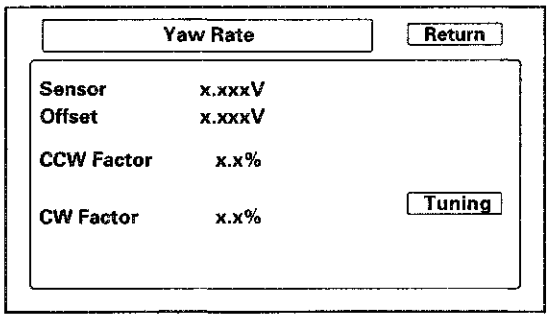

(cont'd)

System Diagnostic Mode (cont'd)

Yaw Rate Tuning

This diagnostic allows you to graphically display problems with the yaw rate sensor.

- The ANG-Disp value accumulates any differences between the offset and sensor voltages (see Yaw Rate diagnostic). When the sensor functions properly, the random changes in these two voltages generally cancels out, so the value is 0. However if one voltage is consistently higher than the other, then the ANG-Disp value accumulates the constant change.
- The Reset button temporarily clears the angular accumulation (ANG-Disp), and clears the display dots.
- Do not touch the CCW, CW, or Set buttons. These are used for factory setup only.

Two tests are explained. For large problems with the sensor values, the stationary test usually confirms whether the sensor is defective. For yaw rate issues related to driving, do the road test described.

1. Stationary test: If the VP icon spins in place and the ANG-Disp value slowly increases or decreases in value, the yaw rate sensor is defective. Replace the navigation unit.

2. Road test: Drive the vehicle on a very straight road. Enter the diagnostic mode, select Yaw rate, and touch the Tuning button. While driving down a straight road, the white dots should trace a straight line across the screen. However, if you are driving on a straight road, and you notice the dots constantly dropping down or heading up as you drive, the navigation control unit's yaw sensor is defective. You can touch Reset to clear ANG-Disp, and dotted lines.

   If either test above fails, please enter Yaw rate sensor defective for the problem description, on the Navigation core return form.

   NOTE: The CCW, CW and Set buttons are disabled and cannot be activated.

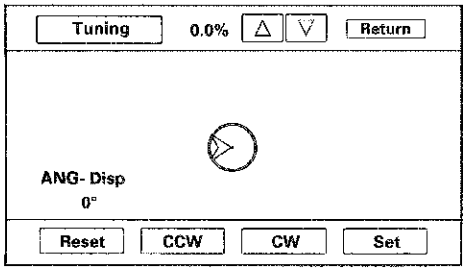

Car Status

Use this screen to confirm that the navigation unit is properly receiving input signals. Signals equal to (0) are OFF, and signals equal to (1) are ON. If the value on the display does not match the actual vehicle status, then check the wire carrying the signal.

- VSP-Vehicle Speed Pulse from PCM (Connector A (8P) terminal No.6)
  a) OFF (0) when vehicle is not moving
  b) ON (1) when vehicle is moving

The VSP comes from the PCM as a dedicated signal. Internally, the navigation unit compares the actual VP on the map against street data to adjust the pulse to speed scaling factor. As this scaling factor becomes more accurate, the Level gradually increases from 0 to 10 (see the Tire Calibrate diagnostic screen).

- BACK-Reverse indication from taillight relay (Connector A (8P) terminal No.5)
  a) OFF (0) when the shift lever is in any position other than reverse
  b) ON (1) when the shift lever is in reverse

The Back signal is used by the navigation unit to allow the map screen to show the VP moving backwards when in reverse. This signal is needed because the Speed Pulse has no direction indication.

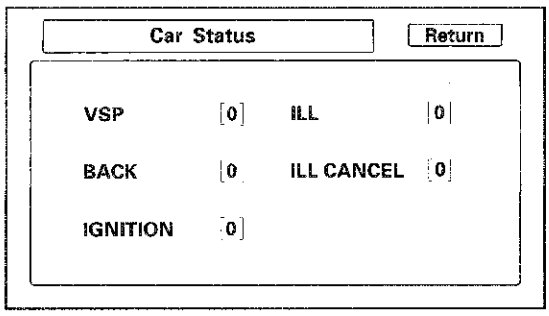

- IGNITION-Ignition Switch Position Indication
  (Connector A (8P) terminals No. 1 and 2)
  Detects if the engine is running is running using information provided over the F-CAN bus.
  a) OFF (0) when the ignition switch position is ACCESSORY (I)
  b) ON (1) when the ignition switch position is ON (II)
- ILL-Illumination Indication
  (Connector B (32P) terminal No. 5)
  a) OFF (0) when parking lights, or headlights are off
  b) ON (1) when parking lights, or headlights are on

The navigation uses the signal to determine whether to put the navigation screen into the Day or Night brightness mode. (Setup screen 1)

- ILL CANCEL
  This item detects whether the illumination cancel function is in use.
  a) OFF (0) if illumination cancel is not selected
  b) ON (1) if illumination cancel is activated

The illumination cancel function is activated by increasing the dash brightness to MAX. The F-CAN bus passes this information from the gauge control module to the navigation unit.

NOTE: This setting is unaffected by the display mode hard button located below and to the left of the interface dial.

Version

This screen displays the current version information for the navigation system software. In addition, this screen allows the loading of updated software if requested by the factory, or instructed by a Service Bulletin. Software may be loaded from a CD or a PC card.

- Program Flash: Displays the version of the navigation software in memory.
- Program Disc: If displayed, this value represents the version of the navigation software on the navi DVD.

  NOTE: The last two letters of the Program Flash or DVD fields indicate which DVD is installed in the unit. The letters KA imply that a United States DVD is installed. If the letters are KC, then a Canada DVD is installed. (See coverage discussion below.)

- IPL, APL, DBOOT, and System uCom, are all for factory use.
- Model: For this model, the field should begin with TA0.
- Download: Do not touch, unless instructed by the factory.

  Check any official Honda service website for more service information about navigation DVDs.

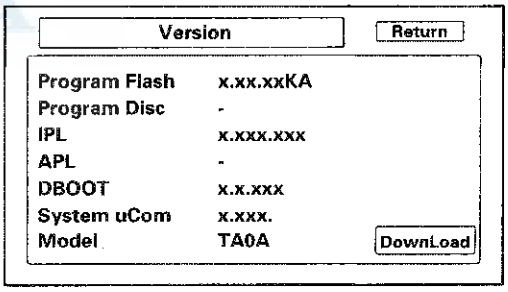

There are two navigation DVDs produced for this model.

- The white DVD labeled United States is for the US market and contains maps for the contiguous 48 US states, and some southern portions of Canada. Customers wanting additional northern coverage in Canada, can purchase a Canada DVD by contacting the DVD fulfillment desk.
- The gray DVD labeled Canada, is for the Canada market, and contains maps for all of Canada, plus some of the northern US states. If customers with this DVD require full US coverage (including states like Florida and Texas), they may purchase a United States DVD by contacting the DVD fulfillment desk.

(cont'd)

System Diagnostic Mode (cont'd)

PC Card FAQs

Question	Answer
Where do we buy the flash memory or adaptors, and what do we ask for?	You need a PCMCIA type II adaptor and a flash memory chip. You can purchased them at a computer, or office supply store. The card is the same size and shape as the PC card in the HDS. Adaptors that accept multiple flash types are not recommended.
What memory flash chips will work with what adaptors?	The flash memory devices that have been tested include Compact Flash (CF), and ATA style (like the card in the HDS). Other card types and flash memory chips may work, but have not been tested.
What capacity card do I need for this function?	A memory chip with capacity of 64 MB to 2 GB will work. The two files moved to the PC card during export are less than a Megabyte in size.
Should the dealer have a dedicated PC card for the Export and Import navigation function?	Yes, treat the PC card as a dedicated special tool that you can use any time you need to transfer the navigation personal files to a new navigation unit on '08 or later vehicles.
What device can I use to maintain the PC card, and delete files	Any computer store sells USB style card readers that accept the PC card, and a allow you to do file maintenance on your PC card. Most laptops will also accept the PC card.
Can we move the customer's data to different models?	No, the files are model specific and will only load into a navigation unit with the same part number.
Can we move the customer's data to the same vehicle with a different software version? (Like moving version 4.41 to version 4.51)	The customer's files can only be transferred to a new navigation unit if the Model and the Program Flash shown on the Version screen are the same. Files cannot be transferred to the different model and different versions.
Will other files on the PC card like images or music files prevent the Export/Import function from working?	No, the system simply adds two small files that are recognized by the new navigation unit when performing the import function. However, it the PC card is full, the Export function won't work correctly.
Do I have to delete the files on the PC card after each transfer of the personal data?	After the transfer of personal data to the new navigation unit, the files remain on the PC card. Since this is confidential information, we recommend that you delete these files after each use. Please note that each time you export navigation files of the same model and version, the files are overwritten. Over time the PC card accumulates two files for each version of the 8 or so Honda navigation PC models.
If the memory card needs formatting, what format should I use?	If the PC card needs to be formatted, use the FAT (file allocation table) file system.
I can't enter the navigation diagnostic mode to do the Export/Import function. How can I transfer the personal data?	Some internal navigation unit ECU failures may make it impossible to use the Export/Import function.

Question	Answer
Why wont the Export or Import functions work? What do I check as part of troubleshooting?	• The card may not be fully inserted into the slot. Eject the PC card, and inspect for warping or damage to the edge connector. Never use excessive force to insert a PC card. This can damage the pins in the rear of the slot. • The PC card may not contain files that are recognized by the new navigation unit. Navigation date can only be transferred between navigation units with the same Model code, and with the same navi Program flash version. • The flash memory chip type may not be accepted by the system. Only Compact Flash and ATA cards have been tested. • The card's PCMCIA adaptor may prevent a known-good PC card from being recognized. Avoid multi-slot type PCMCIA adaptors that accept several different flash memory types. • The card may be full and as a result the files are stored, but without any data. Export and import appear to function, but move nothing. Delete unused files from the PC card. • There may not be any files on the PC card. If the PC card has a write protection switch, make sure it is turned off before using the Export function. • Although flash memory chips are reliable, occasionally they develop bad sectors or other formatting errors that prevents them from accepting files. The PC card should be reformatted using the FAT format. • The PC card may have been formatted using the format NTFS. Only the FAT format is accepted by the system. • Hard Disc Drive (HDD) cards may not work properly in the system and can overheat or quit functioning, particularly in a hot vehicle. They are not recommended. • Before performing the Import function, ensure that the original navigation DVD is loaded into the new navigation unit and working properly.

(cont'd)

System Diagnostic Mode (cont'd)

Error Message Table

Screen Error Message	Solution
Navigation system is unable to acquire a proper GPS signal.	Make sure there is nothing on the dashboard blocking the GPS antenna. If not, move the vehicle to an open space away from tall buildings, trees, etc. Aftermarket metallic window tinting and other aftermarket devices can affect the GPS reception.
Navigation unit door is open or No DVD disc installed. Please check system.	Make sure the navigation DVD is the correct color and is not scratched or damaged. Make sure it is installed with the label side up and the navigation unit door is snapped fully closed.
No DVD disc, please check system.	Check that the navigation DVD is installed with the label side up.
Display temp is too high. System will shut down until display cools down.	This message appears briefly when the display temperature is too high, and then the display turns off until the temperature cools down. The system turns back on when the display cools down.
Outside temperature is low, system will take a while to start up.	The temperature is below −30 ℃ and the navigation unit has difficulties reading the navigation DVD. The system will start up when the temperate warms up.
DVD disc reading error (unformatted), please consult your dealer.	Check the navigation DVD for the correct color and software version. Also check for deep scratches or other damage. Make sure you are using an official Honda navigation DVD (white in color). The system cannot read other mapping databases or video DVDs. Check any official Honda service website for more service information about the navigation system.
Route has not been completed. Please try again from a different location.	Routing to or from a place (new area) that is not in the database. Try planning a different route to or from a different location that is clearly displayed on the map (map matched).
No alternate route found. Original route will be guided.	No alternate route method was found. The original route method will be used.
This destination cannot be found in database.	The destination was not found in the database. Try another destination nearby, or select the destination with the interface dial.

DTC Troubleshooting

DTC 1001: FROM System Info Error

NOTE:
- Check the vehicle battery condition first.
- Before you troubleshoot, make sure to follow the general troubleshooting information (see page 23-126).

1. Turn the ignition switch to LOCK (0), and then back to ON (II).

2. Check for the hard error code (see page 23-133).

   Is DTC 1001 indicated?

   YES—Replace the navigation unit (see page 23-240), because there is an internal problem with the Flash-ROM. ■

   NO—Intermittent failure, the system is OK at this time. ■

DTC 1101: Media Bus Send Error

NOTE:
- Check the vehicle battery condition first.
- Before you troubleshoot, make sure to follow the general troubleshooting information (see page 23-126).

1. Clear hard error code (see page 23-134).

2. Turn the ignition switch to LOCK (0), and then back to ON (II).

3. Check for the hard error code (see page 23-133).

   Is DTC 1101 indicated?

   YES—Replace the navigation unit (see page 23-240). ■

   NO—Intermittent failure, the system is OK at this time. ■

DTC Troubleshooting (cont'd)

DTC 1201: DVD High Temp

NOTE:
- Check the vehicle battery condition first.
- Before you troubleshoot, make sure to follow the general troubleshooting information (see page 23-126).
- This code sets when the internal temperature of the navigation unit ECU rises above 158 °F (70 °C). The unit is designed to shut down to protect the navigation unit ECU. This could be caused by an inoperative navigation unit ECU fan or if the trunk temperature exceeds the maximum. Do the troubleshooting when the unit is within the allowable temperature range.

1. Check that the temperature is below 158 °F (70 °C) in the trunk.
2. Clear the hard error code (see page 23-134).
3. Turn the ignition switch to LOCK (0), and then back to ON (II).
4. Check for the hard error code (see page 23-133).

   Is DTC 1201 indicated?

   YES—Replace the navigation unit (see page 23-240). ■

   NO—Intermittent failure, the system is OK at this time. If the unit repeatedly comes back with the DTC, replace the navigation unit. ■

DTC 1202: DVD Low Temp

NOTE:
- Check the vehicle battery condition first.
- Before you troubleshoot, make sure to follow the general troubleshooting information (see page 23-126).
- This code sets when the internal temperature of the navigation unit ECU falls below −4 °F (−20 °C). The unit is designed to shut down to protect the navigation unit ECU. This is usually caused by very cold exterior temperatures. Do the troubleshooting when the unit is within the allowable temperature range.

1. Check that the temperature is above −4 °F (−20 °C) in the trunk.
2. Clear the hard error code (see page 23-134).
3. Turn the ignition switch to LOCK (0), and then back to ON (II).
4. Check for the hard error code (see page 23-133).

   Is DTC 1202 indicated?

   YES—Replace the navigation unit (see page 23-240). ■

   NO—Intermittent failure, the system is OK at this time. ■

DTC 1301: GPS Antenna Error

NOTE:
- Check the vehicle battery condition first.
- Before you troubleshoot, make sure to follow the general troubleshooting information (see page 23-126).
- Make sure the vehicle is parked outside and away from buildings.
- Aftermarket electronic devices located near the navigation unit or GPS antenna can potentially interfere with the operation of the navigation system.

1. Clear the hard error code (see page 23-134).

2. Turn the ignition switch to LOCK (0), and then back to ON (II).

3. Check for the hard error code (see page 23-133).

   Is DTC 1301 indicated?

   YES—Go to step 4.

   NO—Intermittent failure, the system is OK at this time. ■

4. Turn the ignition switch to LOCK (0).

5. Check for poor connections or loose terminals at the navigation unit connector E (2P).

6. Clear the hard error code.

7. Turn the ignition switch to LOCK (0), and then back to ON (II).

8. Check for the hard error code.

   Is DTC 1301 indicated?

   YES—Go to step 9.

   NO—Intermittent failure, the system is OK at this time. ■

9. Turn the ignition switch to LOCK (0).

10. Replace a known-good GPS antenna (see page 23-242).

11. Turn the ignition switch to ON (II).

12. Clear the hard error code.

13. Turn the ignition switch to LOCK (0), and then back to ON (II).

14. Check for the hard error code.

    Is DTC 1301 indicated?

    YES—Replace the original GPS antenna. ■

    NO—Replace the navigation unit (see page 23-240). ■

DTC Troubleshooting (cont'd)

DTC 1302: GPS Receiver Error 1

NOTE:
- Check the vehicle battery condition first.
- Before you troubleshoot, make sure to follow the general troubleshooting information (see page 23-126).
- Make sure the vehicle is parked outside and away from buildings.
- Aftermarket electronic devices located near the navigation unit or GPS antenna can potentially interfere with the operation of the navigation system.

1. Clear the hard error code (see page 23-134).
2. Turn the ignition switch to LOCK (0), and then back to ON (II).
3. Check for the hard error code (see page 23-133).

   Is DTC 1302 indicated?

   YES—Go to step 4.

   NO—Intermittent failure, the system is OK at this time.■
4. Turn the ignition switch to LOCK (0).
5. Check for poor connections or loose terminals at the navigation unit connector E (2P).
6. Clear the hard error code.
7. Turn the ignition switch to LOCK (0), and then back to ON (II).
8. Check for the hard error code.

   Is DTC 1302 indicated?

   YES—Go to step 9.

   NO—Intermittent failure, the system is OK at this time.■
9. Turn the ignition switch to LOCK (0).
10. Replace a known-good GPS antenna (see page 23-242).
11. Turn the ignition switch to ON (II).
12. Clear the hard error code.
13. Turn the ignition switch to LOCK (0), and then back to ON (II).
14. Check for the hard error code.

    Is DTC 1301 indicated?

    YES—Replace the original GPS antenna.■

    NO—Replace the navigation unit (see page 23-240).■

DTC 1303: GPS Receiver Error 2

NOTE:
- Check the vehicle battery condition first.
- Before you troubleshoot, make sure to follow the general troubleshooting information (see page 23-126).
- Make sure the vehicle is parked outside and away from buildings.
- Aftermarket electronic devices located near the navigation unit or GPS antenna can potentially interfere with the operation of the navigation system.

1. Clear the hard error code (see page 23-134).

2. Turn the ignition switch to LOCK (0), and then back to ON (II).

3. Check for the hard error code (see page 23-133).

   Is DTC 1303 indicated?

   YES—Replace the navigation unit (see page 23-240). ■

   NO—Intermittent failure, the system is OK at this time. ■

DTC 1304: Gyro Error 1

NOTE:
- Check the vehicle battery condition first.
- Before you troubleshoot, make sure to follow the general troubleshooting information (see page 23-126).
- Make sure the vehicle is parked outside and away from buildings.
- Aftermarket electronic devices located near the navigation unit or GPS antenna can potentially interfere with the operation of the navigation system.

1. Clear hard error code (see page 23-134).

2. Turn the ignition switch to LOCK (0), and then back to ON (II).

3. Check for the hard error code (see page 23-133).

   Is DTC 1304 indicated?

   YES—Replace the navigation unit (see page 23-240). ■

   NO—Intermittent failure, the system is OK at this time. ■

HONDA

DTC Troubleshooting (cont'd)

DTC 1305: Gyro Error 2

NOTE:
- Check the vehicle battery condition first.
- Before you troubleshoot, make sure to follow the general troubleshooting information (see page 23-126).
- Make sure the vehicle is parked outside and away from buildings.
- Aftermarket electronic devices located near the navigation unit or GPS antenna can potentially interfere with the operation of the navigation system.
- Do this test only when the trunk temperature is between —4 ℉ (—20 ℃) and 158 ℉ (70 ℃).

1. Clear hard error code (see page 23-134).

2. Turn the ignition switch to LOCK (0), and then back to ON (II).

3. Check for the hard error code (see page 23-133).

   Is DTC 1304 indicated?

   YES—Replace the navigation unit (see page 23-240). ■

   NO—Intermittent failure, the system is OK at this time. ■

DTC 1306: Vehicle Speed Pulse

NOTE:
- Check the vehicle battery condition first.
- Before you troubleshoot, make sure to follow the general troubleshooting information (see page 23-126).

1. Clear the hard error code (see page 23-134).

2. Turn the ignition switch to LOCK (0), and then start the engine.

3. Check for the hard error code (see page 23-133).

   Is DTC 1306 indicated?

   YES—Go to step 4.

   NO—Intermittent failure, the system is OK at this time. ■

4. Drive the vehicle and watch the VSP signal.

   Does the VSP signal change from [0] to [1] as you drive?

   YES—Replace the navigation unit (see page 23-240). ■

   NO—Do the symptom troubleshooting for vehicle position icon constantly leaves road, moves erratically or is very far from actual position (see page 23-220). ■

DTC 1307: DVD Read Error

NOTE:
- Check the vehicle battery condition first.
- Check any official Honda service website for more information about the navigation system.
- Before you troubleshoot, make sure to follow the general troubleshooting information (see page 23-126).
- Inspect the navigation DVD for scratches or damage.

1. Turn the ignition switch to ON (II).

   Is there a DVD error message?

   YES—Go to DVD screen error messages (see page 23-230).

   NO—Go to step 2.

2. Clear the heard error code (see page 23-134).

3. Turn the ignition switch to LOCK (0), then back to ON (II).

4. Check for the hard error code (see page 23-133).

   Is DTC 1307 indicated?

   YES—Replace the navigation unit (see page 23-240). ■

   NO—Intermittent failure, the system is OK at this time. ■

DTC 1402: Audio Error 2

NOTE:
- Check the vehicle battery condition first.
- Before you troubleshoot, make sure to follow the general troubleshooting information (see page 23-126).

1. Clear the hard error code (see page 23-134).

2. Turn the ignition switch to LOCK (0), and then back to ON (II).

3. Check for the hard error code (see page 23-133).

   Is DTC 1402 indicated?

   YES—Check if the audio unit functions are working properly. If any problems are found, go to affected troubleshooting in audio section. ■

   NO—Intermittent failure, the system is OK at this time. ■

DTC Troubleshooting (cont'd)

DTC 1403: Audio Error 3

NOTE:
- Check the vehicle battery condition first.
- Before you troubleshoot, make sure to follow the general troubleshooting information (see page 23-126).

1. Clear the hard error code (see page 23-134).
2. Turn the ignition switch to LOCK (0), and then back to ON (II).
3. Check for the hard error code (see page 23-133).

   Is DTC 1403 indicated?

   YES—Replace the navigation unit (see page 23-240). ■

   NO—Intermittent failure, the system is OK at this time. ■

DTC 1409: Audio Error 9

NOTE:
- Check the vehicle battery condition first.
- Before you troubleshoot, make sure to follow the general troubleshooting information (see page 23-126).

1. Clear the hard error code (see page 23-134).
2. Turn the ignition switch to LOCK (0), and then back to ON (II).
3. Check for the hard error code (see page 23-133).

   Is DTC 1409 indicated?

   YES—Check the XM error codes (see page 23-57). If any codes are detected, go to affected troubleshooting in audio (XM) section. ■

   NO—Intermittent failure, the system is OK at this time. ■

HONDA

DTC 1501: Aircon System Error

DTC 2703: Aircon Diag

NOTE:
- Check the vehicle battery condition first.
- Check for B-CAN DTCs and resolve them before troubleshooting.
- Before you troubleshoot, make sure to follow the general troubleshooting information (see page 23-126).
- DTC 1501 and/or 2703 can be stored when the ignition switch is at ACCESSORY (I). With the ignition switch is in ACCESSORY (I), the A/C unit is turned off and the navigation unit loses communication and stores DTCs. Therefore, there is a possibility that the system is normal even DTC 1501 and/or 2703 is stored. Check system links (see page 23-170) with the engine running, and if it shows normal, the system is OK at this time. If not, do this troubleshooting.

1. Clear the hard error code (see page 23-134).

2. Turn the ignition switch to LOCK (0), and then back to ON (II).

3. Go into the Diagnostic Menu, and select the Self-Diagnosis Mode in the Select Diagnosis Items menu (see page 23-170).

4. Check the System Links.

   Is the Aircon icon red?

   YES—Go to step 5.

   NO—Intermittent failure, the system is OK at this time. ■

5. Turn the ignition switch to LOCK (0).

6. Disconnect navigation unit connector B (32P).

7. Connect navigation unit connector B (32P) terminals No. 4, No. 20, and No. 21 with a jumper wire.

NAVIGATION UNIT CONNECTOR B (32P)

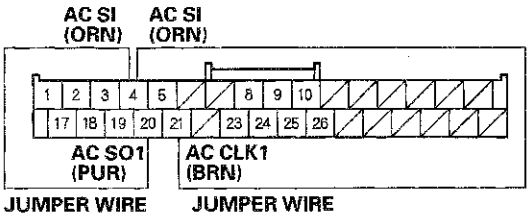

Wire side of female terminals

8. Turn the ignition switch to ON (II).

9. Do the HVAC self-Diagnostic Mode (see page 21-99).

   Are both HEAT/VENT indicators solid with the remaining icons blinking?

   YES—Replace the navigation unit (see page 23-240). ■

   NO—Go to step 10.

10. Turn the ignition switch to LOCK (0), then disconnect the jumper wire.

11. Disconnect climate control unit connecter B (12P).

(cont'd)

DTC Troubleshooting (cont'd)

12. Connect climate control unit connector B (12P) terminals No. 7, No. 8, and No. 9 with a jumper wire.

CLIMATE CONTROL UNIT CONNECTOR B (12P)

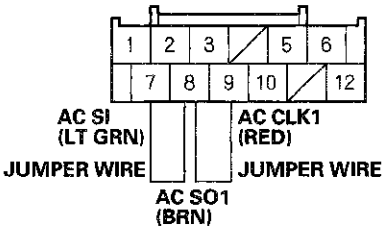

Wire side of female terminals

13. Check for continuity between navigation unit connector B (32P) terminals No. 4, No. 20, and between terminals No. 20 and No. 21.

NAVIGATION UNIT CONNECTOR B (32P)

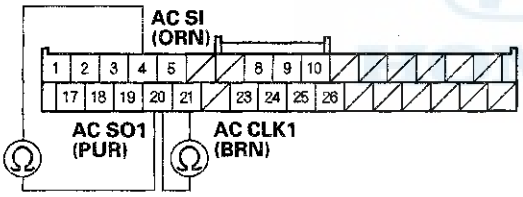

Wire side of female terminals

Is there continuity?

YES—Go to step 14.

NO—Repair open in the wire(s) between the navigation control unit and the climate control unit. ■

14. Disconnect the jumper wire.

15. Check for continuity between body ground and navigation unit connector B (32P) terminals No. 4, No. 20, and No. 21 individually.

NAVIGATION UNIT CONNECTOR B (32P)

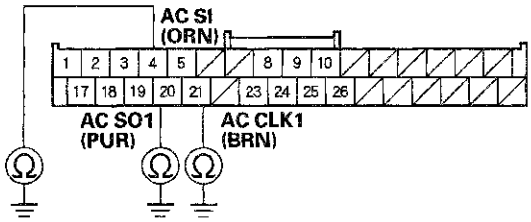

Wire side of female terminals

Are there continuity?

YES—Repair short to body ground in the wire(s) between the navigation control unit and the climate control unit. ■

NO—Go to step 16.

16. Check for continuity between the terminal of navigation unit connector B (32P) according to the table.

From terminal	To terminals
B4 (ORN)	B20 (PUR), B21 (BRN)
B20 (PUR)	B21 (BRN)

NAVIGATION UNIT CONNECTOR B (32P)

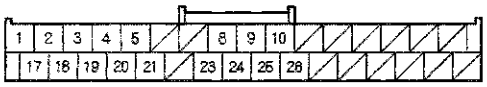

Wire side of female terminals

Is there continuity?

YES—Repair short in the wire(s) between the navigation unit and climate control unit.■

NO—Go to step 17.

17. Turn the ignition switch to ON (II).

18. Measure the voltage between body ground and navigation unit connector B (32P) terminals No. 4, No. 20, and No. 21 individually.

NAVIGATION UNIT CONNECTOR B (32P)

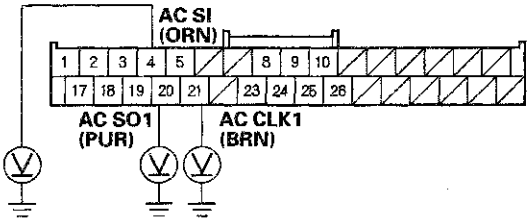

Wire side of female terminals

Is there voltage above 0.2 V?

YES—Repair short to power in the wire(s) between the navigation unit and the climate control unit.■

NO—Replace the climate control unit (see page 21-180).■

DTC Troubleshooting (cont'd)

DTC 2601: Display Diag: Connect

NOTE:
- Check the vehicle battery condition first.
- Check for B-CAN DTCs and resolve them before troubleshooting.
- Before you troubleshoot, make sure to follow the general troubleshooting information (see page 23-126).

1. Clear the hard error code (see page 23-134).

2. Turn the ignition switch to LOCK (0), and then back to ON (II).

3. Go into the Diagnostic Menu, and select the Self-Diagnosis Mode in the Select Diagnosis Items menu (see page 23-170).

4. Check the System Links.

   Is the Display icon red?

   YES—Go to step 5.

   NO—Intermittent failure, the system is OK at this time.■

5. Check for poor connections or loose terminals at navigation unit connector B (32P), audio unit connector E (14P), and XM receiver connector A (14P).

   Are the connections OK?

   YES—Go to step 5.

   NO—Repair poor connections or loose terminals, and recheck the self-diagnosis mode (see page 23-170).■

6. Turn the ignition switch to LOCK (0).

7. Disconnect navigation unit connector B (32P) and the navigation display unit 28P connector.

8. Connect the navigation unit connector B (32P) terminals No. 10 and No. 26 with a jumper wire.

NAVIGATION UNIT CONNECTOR B (32P)

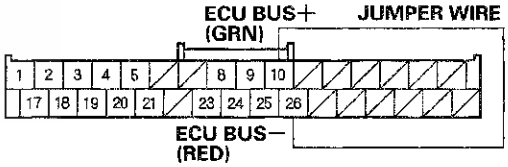

Wire side of female terminals

9. Check for continuity between navigation display unit 28P connector terminals No. 5 and No. 19.

NAVIGATION DISPLAY UNIT 28P CONNECTOR

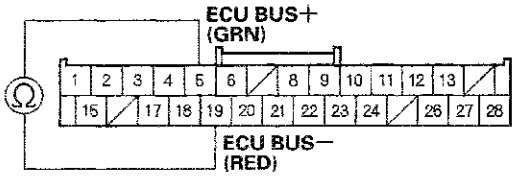

Wire side of female terminals

Is there continuity?

YES—Go to step 10.

NO—Open in the wire between the navigation unit and the navigation display unit. Replace the affected shielded harness. ■

10. Disconnect the jumper wire.

11. Disconnect the audio unit connector E (14P) and XM receiver A (14P) connector.

12. Check for continuity between navigation display unit 28P connector terminals No. 5 and No. 19, and between terminals No. 3 and No. 17.

NAVIGATION DISPLAY UNIT 28P CONNECTOR

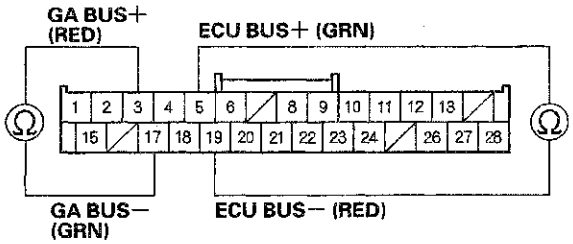

Wire side of female terminals

Is there continuity?

YES—Short in the wire(s) between GA-NET (+) and (−) wire. Replace the affected shielded harness. ■

NO—Go to step 13.

(cont'd)

DTC Troubleshooting (cont'd)

13. Check for continuity between body ground and navigation display unit 28P connector terminals No. 5 and No. 19 individually.

NAVIGATION DISPLAY UNIT 28P CONNECTOR

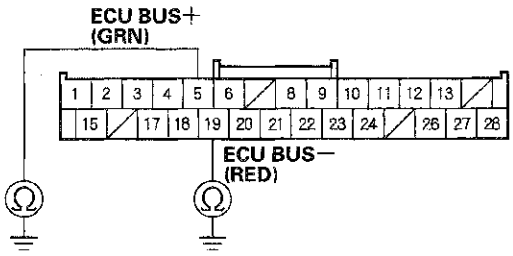

Wire side of female terminals

Is there continuity?

YES—Short to body ground in the wire(s) between the navigation display unit and the navigation unit. Replace the affected shielded harness. ■

NO—Go to step 14.

14. Reconnect the all connectors, then turn the ignition switch to ON (II).

15. Go into the Diagnostic Menu, and select the Self-Diagnosis Mode in the Select Diagnosis Items menu (see page 23-170).

16. Check the System Links.

Is the Display icon red?

YES—Go to step 17.

NO—Intermittent failure, the system is OK at this time. ■

17. Turn the ignition switch to LOCK (0).

18. Disconnect audio unit connector E (14P), and then ignition switch to ON (II).

19. Go into the Diagnostic Menu, and Select the Self-Diagnosis Mode in the Select Diagnosis Items Menu (see page 23-170).

20. Check the System Links.

Is the Display icon red?

YES—Go to step 21.

NO—Internal short circuit in the audio unit. ■

21. Turn the ignition switch to LOCK (0).

22. Connect audio unit connector E (14P).

23. Disconnect XM receiver connector A (14P), and then turn the ignition switch to ON (II).

24. Go into the Diagnostic Menu, and Select the Self-Diagnosis Mode in the Select Diagnosis Items Menu (see page 23-170).

25. Check the System Links.

Is the Display icon red?

YES—Replace the navigation display unit (see page 23-241). ■

NO—Replace the XM receiver (see page 23-115). ■

DTC 2602: Display Diag: ROM

NOTE:
- Check the vehicle battery condition first.
- Check for B-CAN DTCs and resolve them before troubleshooting.
- Before you troubleshoot, make sure to follow the general troubleshooting information (see page 23-126).

1. Clear the hard error code (see page 23-134).

2. Turn the ignition switch to LOCK (0), and then back to ON (II).

3. Go into the Diagnostic Menu, and select the Self-Diagnosis Mode in the Select Diagnosis Items menu (see page 23-170).

4. Select the Display.

   Is the ROM NG?

   YES—Replace the navigation display unit (see page 23-241).■

   NO—Intermittent failure, the system is OK at this time.■

DTC 2603: Display Diag: RAM

NOTE:
- Check the vehicle battery condition first.
- Check for B-CAN DTCs and resolve them before troubleshooting.
- Before you troubleshoot, make sure to follow the general troubleshooting information (see page 23-126).

1. Clear the hard error code (see page 23-134).

2. Turn the ignition switch to LOCK (0), and then back to ON (II).

3. Go into the Diagnostic Menu, and select the Self-Diagnosis Mode in the Select Diagnosis Items menu (see page 23-170).

4. Select the Display.

   Is the RAM NG?

   YES—Replace the navigation display unit (see page 23-241).■

   NO—Intermittent failure, the system is OK at this time.■

HONDA

DTC Troubleshooting (cont'd)

DTC 2605: H/U Diag: Connect

NOTE:
- Check the vehicle battery condition first.
- Check for B-CAN DTCs and resolve them before troubleshooting.
- Before you troubleshoot, make sure to follow the general troubleshooting information (see page 23-126).

1. Clear the hard error code (see page 23-134).

2. Turn the ignition switch to LOCK (0), and then back ON (II).

3. Check the Error History (see page 23-133).

   Is Hard Error 2601 indicated?

   YES—Do the 2601 troubleshooting.

   NO—Go to step 4.

4. Go into the Diagnostic Menu, and select the Self-Diagnosis Mode in the Select Diagnosis Items menu (see page 23-170).

5. Select the System Links.

   Is the Radio icon red?

   YES—Go to step 6.

   NO—Intermittent failure, the system is OK at this time.■

6. Turn the ignition switch to LOCK (0).

7. Check for poor connections or loose terminals at audio unit connector E (14P), XM receiver connector A (14P), and navigation display unit 28P connector.

   Are there connections OK?

   YES—Go to step 8.

   NO—Repair poor connections or loose terminals, and recheck the self-diagnosis mode (see page 23-170).■

8. Disconnect audio unit connector E (14P), XM receiver connector A (14P), and navigation display unit 28P connector.

9. Connect audio unit connector E (14P) terminals No. 9 and No. 10 with a jumper wire.

AUDIO UNIT CONNECTOR E (14P)

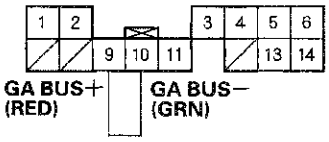

JUMPER WIRE

Wire side of female terminals

10. Check for continuity between the navigation display unit 28P connector terminals No. 3 and No. 17.

NAVIGATION DISPLAY UNIT 28P CONNECTOR

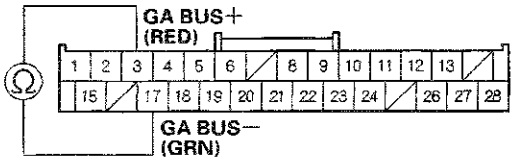

Wire side of female terminals

Is there continuity?

YES—Go to step 11.

NO—Open in the wire(s) between the audio unit and the navigation display unit. Replace the affected shielded harness. ■

11. Replace a known-good audio unit (see page 23-110).

12. Turn the ignition switch to ON (II).

13. Clear the hard error code.

14. Turn the ignition switch to LOCK (0), and then back to ON (II).

15. Check for the hard error code (see page 23-134).

Is DTC 2605 indicated?

YES—Replace the original audio unit. ■

NO—Replace the navigation display unit (see page 23-241). ■

DTC Troubleshooting (cont'd)

DTC 2607: XM Diag

NOTE: Before you troubleshoot, make sure to follow the general troubleshooting information (see page 23-126).

1. Clear the hard error code (see page 23-134).

2. Turn the ignition switch to LOCK (0), and then back ON (II).

3. Check the Error History (see page 23-133).

   Is Hard Error 2601 indicated?

   YES—Do the 2601 troubleshooting.

   NO—Go to step 4.

4. Go into the Diagnostic Menu, and select the Self-Diagnosis Mode in the Select Diagnosis Items menu (see page 23-170).

5. Check the System Links.

   Is the XM icon red?

   YES—Go to step 6.

   NO—Intermittent failure, the system is OK at this time. ■

6. Turn the ignition switch to LOCK (0).

7. Check for poor connections or loose terminals at the XM receiver connector, the satellite signal antenna connector, and the navigation display unit 28P connector.

   Are the connections OK?

   YES—Go to step 8.

   NO—Repair poor connections or loose terminals. ■

8. Disconnect XM receiver connector A (14P), the navigation display unit 28P connector, and audio unit connector E (14P).

9. Connect XM receiver connector A (14P) terminals No. 9 and No. 10 with a jumper wire.

XM RECEIVER CONNECTOR A (14P)

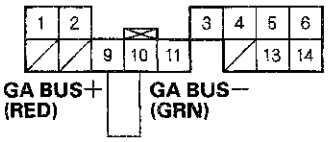

JUMPER WIRE

Wire side of female terminals

10. Check for continuity between navigation display unit 28P connector terminals No. 3 and No. 17.

NAVIGATION DISPLAY UNIT 28P CONNECTOR

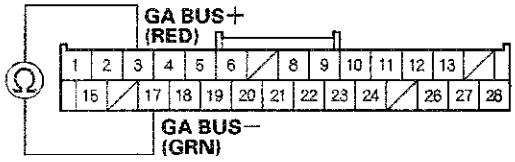

Wire side of female terminals

Is there continuity?

YES—Check the XM error codes (see page 23-57). If any codes are detected, go to the applicable troubleshooting in audio (XM) section.■

NO—Repair open in the wire between navigation display unit and XM receiver.■

DTC 2609: VRAM Diag

NOTE: Before you troubleshoot, make sure to follow the general troubleshooting information (see page 23-126).

1. Clear the hard error code (see page 23-134).
2. Turn the ignition switch to LOCK (0), and then back to ON (II).
3. Go into the Diagnostic Menu, and select the Self-Diagnosis Mode in the Select Diagnosis items menu (see page 23-170).
4. Select the System Links, then select the ECU Info.

   Is V-RAM OK indicated?

   YES—Intermittent failure, the system is OK at this time.■

   NO—Replace the navigation unit (see page 23-240).■

DTC Troubleshooting (cont'd)

DTC 2610: DRAM Diag

NOTE:
- Check the vehicle battery condition first.
- Before you troubleshoot, make sure to follow the general troubleshooting information (see page 23-126).

1. Clear the hard error code (see page 23-134).
2. Turn the ignition switch to LOCK (0), and then back to ON (II).
3. Go into the Diagnostic Menu, and select the Self-Diagnosis Mode in the Select Diagnosis items menu (see page 23-170).
4. Select the System Links, then select the ECU Info.

   Is D-RAM OK indicated?

   YES—Intermittent failure, the system is OK at this time.■

   NO—Replace the navigation unit (see page 23-240). ■

DTC 2701: GPS Diag: Antenna

NOTE:
- Check the vehicle battery condition first.
- Before you troubleshoot, make sure to follow the general troubleshooting information (see page 23-126).
- Make sure the vehicle is parked outside, and away from buildings.
- Check for electronic aftermarket accessories (possibly hidden) mounted near the GPS antenna or the navigation unit.

1. Clear the hard error code (see page 23-134).
2. Turn the ignition switch to LOCK (0), and then back to ON (II).
3. Go into the Diagnostic Menu, and select the Self-Diagnosis Mode in the Select Diagnosis items menu (see page 23-170).
4. Select the System Links, then select the GPS Ant.

   Is Antenna OK indicated?

   YES—Intermittent failure, the system is OK at this time.■

   NO—Go to step 5.

5. Turn the ignition switch to LOCK (0).
6. Check for poor connections at navigation unit connector E (2P).

   Is the connection OK?

   YES—Replace the GPS antenna (see page 23-242). ■

   NO—Repair poor connection.■

DTC 2702: GPS Diag: Receiver in Navi ECU

NOTE:
- Check the vehicle battery condition first.
- Before you troubleshoot, make sure to follow the general troubleshooting information (see page 23-126).
- Make sure the vehicle is parked outside and away from buildings.
- Check for electronic aftermarket accessories (possibly hidden) mounted near the GPS antenna or the navigation unit.

1. Clear the hard error code (see page 23-134).

2. Turn the ignition switch to LOCK (0), and then back to ON (II).

3. Go into the Diagnostic Menu, and select the Self-Diagnosis Mode in the Select Diagnosis items menu (see page 23-170).

4. Select the System Links, then select the GPS Ant.

   Is Receiver in Navi ECU OK indicated?

   YES—Intermittent failure, the system is OK at this time. ■

   NO—Replace the navigation unit (see page 23-240). ■

DTC 2705: HFL Diag

NOTE: Before you troubleshoot, make sure to follow the general troubleshooting information (see page 23-126).

1. Clear the hard error code (see page 23-134).

2. Turn the ignition switch to LOCK (0), and then back to ON (II).

3. Go into the Diagnostic Menu, and select the Self-Diagnosis Mode in the Select Diagnosis items menu (see page 23-170).

4. Select the System Links.

   Is the HFL icon red?

   YES—Go to step 5.

   NO—Intermittent failure, the system is OK at this time. ■

5. Turn the ignition switch to LOCK (0).

6. Connect the HDS to the DLC (see page 23-253).

7. Clear the DTCs with the HDS.

8. Turn the ignition switch to LOCK (0), and then back to ON (II).

9. Check for DTCs with the HDS.

   Are there any HFL DTCs indicated?

   YES—Do the HFL DTC troubleshooting. ■

   NO—Go to step 10.

10. Turn the ignition switch to LOCK (0).

11. Disconnect navigation unit connector D (5P).

12. Disconnect the HandsFreeLink control unit 28P connector.

(cont'd)

DTC Troubleshooting (cont'd)

13. Connect HandsFreeLink control unit 28P connector terminals No. 6 and No. 7 with a jumper wire, then connect the terminals No. 20 and No. 21 with a jumper wire.

HANDSFREELINK CONTROL UNIT 28P CONNECTOR

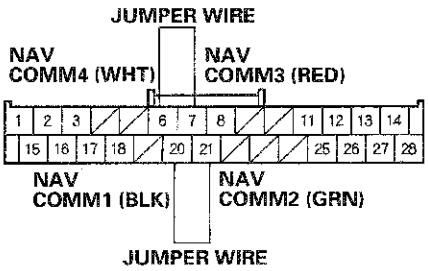

Wire side of female terminals

14. Check for continuity between navigation unit connector D (5P) terminals No. 1 and No. 2 then check for continuity between terminals No. 3 and No. 4.

NAVIGATION UNIT CONNECTOR D (5P)

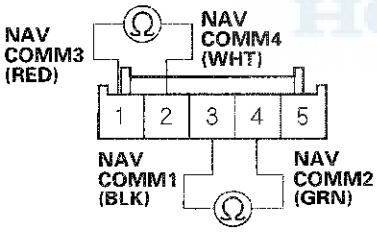

Wire side of female terminals

Is there continuity?

YES—Go to step 15.

NO—Open in the wire between the navigation unit and the HandsFreeLink control unit. Replace the affected shielded harness. ■

15. Disconnect the jumper wire.

16. Check for continuity between the terminals of navigation unit connector D (5P) according to the table.

From terminal	To terminals
D1 (RED)	D2 (WHT), D3 (BLK), D4 (GRN)
D2 (WHT)	D3 (BLK), D4 (GRN)
D3 (BLK)	D4 (GRN)

NAVIGATION UNIT CONNECTOR D (5P)

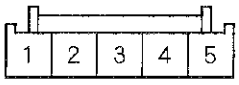

Wire side of female terminals

Is there continuity?

YES—Short in the wires between the navigation unit and the HandsFreeLink control unit. Replace the affected shielded harness. ■

NO—Go to step 17.

17. Check for continuity between navigation unit connector D (5P) and body ground according to the table.

Navigation unit connector	Wire color
D1	RED
D2	WHT
D3	BLK
D4	GRN

NAVIGATION UNIT CONNECTOR D (5P)

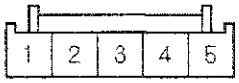

Wire side of female terminals

Is there continuity?

YES—Short to body ground in the wires between the navigation unit and the HandsFreeLink control unit. Replace the affected shielded harness. ■

NO—Replace the HandsFreeLink control unit. ■

DTC 2706: ECU Temp XX ℃

NOTE:
- Before you troubleshoot, make sure to follow the general troubleshooting information (see page 23-126).
- Do this test only when the trunk temperature is between —4 ℉ (—20 ℃) and 158 ℉ (70 ℃).

1. Clear the hard error code (see page 23-134).

2. Turn the ignition switch to LOCK (0), and then back ON (II).

3. Check for the hard error code (see page 23-133).

   Is DTC 2706 indicated?

   YES—Replace the navigation unit (see page 23-240). ■

   NO—Intermittent failure, the system is OK at this time. ■

DTC Troubleshooting (cont'd)

DTC 2707: MIC Diag

NOTE: Before you troubleshoot, make sure to follow the general troubleshooting information (see page 23-126).

1. Clear the hard error code (see page 23-134).
2. Turn the ignition switch to LOCK (0), and then back to ON (II).
3. Go into the Diagnostic Menu, and select the Self-Diagnosis Mode in the Select Diagnosis items menu (see page 23-170).
4. Select the System Links.

   Is the Mic icon red?

   YES—Go to step 5.

   NO—Go to step 8.
5. Turn the ignition switch to LOCK (0).
6. Check for poor connections or loose terminals at HandsFreeLink control unit 28P connector, HFL-navigation-ANC microphone 7P connector, and navigation control unit D (5P) connector.

   Are the connections OK?

   YES—Go to step 7.

   NO—Repair poor connections or loose terminals. ■
7. Check for DTCs with the HDS.

   Is DTC B1775 or B1776 indicated?

   YES—Troubleshooting the indicated DTC. ■

   NO—Go to step 10.
8. Select the Mic in the System Links.
9. Press the navigation TALK button on the steering wheel switch, then check the Mic Level (see page 23-182).

   Is the microphone level OK?

   YES—Intermittent failure, the system is OK at this time. ■

   NO—Replace the HFL-navigation-ANC microphone (see page 23-242). ■
10. Turn the ignition switch to LOCK (0).
11. Disconnect the HFL-navigation-ANC microphone 7P connector.

12. Turn the ignition switch to ON (II).

13. Measure the voltage between the body ground and HFL-navigation-ANC microphone 7P connector terminals No. 6 and No. 7 individually.

HFL-NAVIGATION-ANC MICROPHONE 7P CONNECTOR

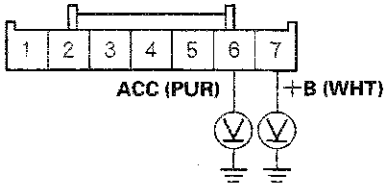

Wire side of female terminals

Is there battery voltage?

YES—Go to step 14.

NO—Repair open in the wire(s). ■

14. Turn the ignition switch to LOCK (0).

15. Reconnect the HFL-navigation-ANC microphone 7P connector.

16. Turn the ignition switch to ON (II).

17. Measure the voltage between the HFL-navigation-ANC microphone 7P connector terminal No. 1 and body ground.

HFL-NAVIGATION-ANC MICROPHONE 7P CONNECTOR

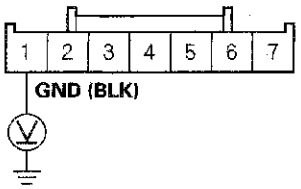

Wire side of female terminals

Is there 0.2 V or less?

YES—Replace the HFL-navigation-ANC microphone (see page 23-242). ■

NO—Repair open or high resistance in the wire between HFL-navigation-ANC microphone 7P connector and body ground (G501). ■

Symptom Troubleshooting

No picture is displayed

Diagnostic Test: Self-Diagnosis Mode

NOTE:
- Check the vehicle battery condition first.
- Check if ☼ ☽ button has been pressed, and turned off the display (see owner's manual for more information).
- Check the connectors for poor connections or loose terminals.
- Before troubleshooting, make sure you have the anti-theft code for the navigation system.
- Make sure that the correct DVD color and version are installed.
- Inspect the DVD for dirt or damage.
- Check any official Honda service website for more service information about the navigation system.

1. Check the No. 15 (10 A) fuse in the under-hood fuse/relay box and No. 18 (7.5 A) fuse in the driver's under-dash fuse/relay box, and reinstall the fuses if they are OK.

   Are the fuses OK?

   YES—Go to step 2.

   NO—Replace the fuse and recheck.■

2. Turn the ignition switch to ACCESSORY (I).

3. Operate the radio and listen to the audio.

   Can you hear the audio?

   YES—Go to step 4.

   NO—Check the ACC circuit or refer to the audio system troubleshooting.■

4. Turn the ignition switch to ON (II).

5. Measure the voltage between body ground and navigation unit connector A (8P) terminals No. 1 and No. 2 individually.

NAVIGATION UNIT CONNETCOR A (8P)

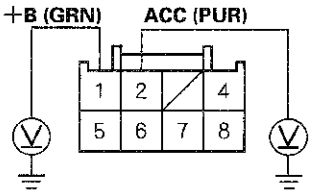

Wire side of female terminals

Is there battery voltage?

YES—Go to step 6.

NO—If the +B wire does not have voltage, repair an open in the wire between the under-hood fuse relay box and the navigation unit. If the ACC wire does not have voltage, repair open in the wire between the under-dash fuse/relay box and the navigation unit.■

6. Measure the voltage between navigation unit connector A (8P) terminal No. 4 and body ground.

NAVIGATION UNIT CONNECTOR A (8P)

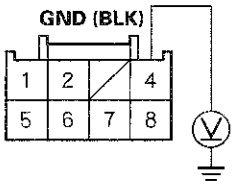

Wire side of female terminals

Is there 0.2 V or less?

YES—Go to step 7.

NO—Repair open or high resistance in the wire between the navigation unit and body ground (G651) 4-door (see page 22-46) 2-door (see page 22-48).■

7. Do the forced starting of the display (see page 23-239).

   Is the diagnosis menu of the picture diagnosis displayed?

   YES—Go into Self-Diagnosis mode (see page 23-170) to check the links.■

   NO—Go to step 8.

8. Shield the navigation display unit from the sun with your hand, and check that the display is back lit (only back light is ON.)

   Can you see the back light?

   YES—Substitute a known-good navigation unit (see page 23-240) and retest. If the problem goes away, replace the original navigation unit. If the problem is still present, replace the navigation display unit (see page 23-241).■

   NO—Go to step 9.

9. Measure the voltage between body ground and navigation display unit 28P connector terminals No. 1 and No. 2 individually.

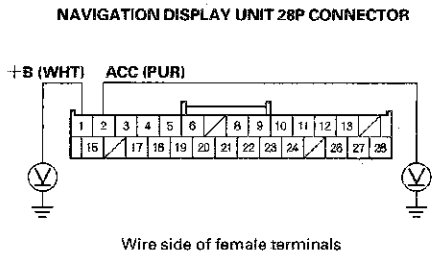

   Is there battery voltage?

   YES—Go to step 10.

   NO—If the +B wire does not have voltage, repair open in the wire between the under-hood fuse/relay box and the navigation display unit 28P connector. If the ACC wire does not have voltage, repair open in the wire between the under-dash fuse/relay box and the navigation display unit 28P connector.■

10. Measure the voltage between the navigation display unit 28P connector terminal No. 10 and body ground.

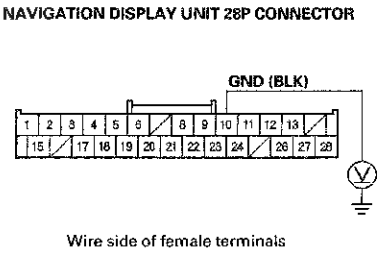

   Is there less than 0.2 V?

   YES—Substitute a known-good navigation unit (see page 23-240) and retest. If the problem goes away, replace the original navigation unit. If the problem is still present, replace the navigation display unit.■

   NO—Repair open or high resistance in the wire between the navigation display unit and body ground (G401) (see page 22-40).■

Symptom Troubleshooting (cont'd)

Vehicle position icon constantly leaves road, moves erratically, or is displayed very far from actual vehicle position

NOTE:
- Check the vehicle battery condition first.
- Check that the GPS antenna is plugged in.
- This is not the same condition as when driving off-road (or on a fire or logging road). This condition is caused by a loss of map matching from a bad sensor input. Check for after market window tinting or other objects that can block the GPS signal. Always do the Map matching (see page 23-129) before proceeding with the troubleshooting.
- Make sure that the correct DVD color and version are installed.
- Inspect the DVD for dirt or damage.
- Check any official Honda service website for more service information about the navigation system.
- Check the GPS signal reception in an open area.

1. Check the GPS icon on the navigation screen.
   Is the GPS icon white?
   YES—Do the troubleshooting for GPS icon is white or not shown (see page 23-226).■
   NO—Go to step 2.
2. Go into the Self-Diagnosis Mode, and use the Yaw Rate test (see page 23-187) to check the yaw rate sensor.
3. Go into the Self-Diagnosis Mode, and use the Car Status test (see page 23-188) to check the vehicle speed pulse.
   Are the yaw rate sensor and vehicle speed pulse OK?
   YES—The condition may be normal. Check to see if the condition occurs in the same place in a known-good vehicle. If it does, the problem could be in the database. Go to step 4.
   NO—If the problem is the yaw rate sensor, replace the navigation unit (see page 23-240). If the problem is the vehicle speed pulse, check for an open in the wire between the navigation unit and the ECM/PCM (VSP signal). If the wire is OK, substitute a known-good navigation unit and retest. If the problem goes away, replace the original navigation unit. If the problem is still present, , replace the ECM/PCM.■
4. Substitute a known-good navigation unit, and check to see if the problem occurs in the same place.
   Does the problem occur in the same place?
   YES—The problem is in the database. Report the problem according to the Navigation System Manual under Reporting Errors.■
   NO—Replace the original navigation unit (see page 23-240).■

Picture is missing a color or tone or is an odd color

NOTE:
- Check the vehicle battery condition first.
- Check the connectors for poor connections or loose terminals.
- Make sure that the correct DVD color and version are installed.
- Inspect the DVD for dirt or damage.
- Check any official Honda service website for more service information about the navigation system.
- Check the navigation screen settings for brightness, contrast, and black level, and check the color screen for map color and menu color.
- Before troubleshooting, make sure you have anti-theft codes for the audio system and the navigation system.
- After troubleshooting, enter the anti-theft codes for the audio system and the navigation system.
- Check for aftermarket accessories that may interfere with the navigation system.

1. Go into the Detail Information & Settings select Monitor Check, and use RGB Color test under Monitor Check (see page 23-175).

   Are the red, green, and blue colored circles shown?

   YES—The system is OK at this time.■

   NO—Go to step 2.
2. Turn the ignition switch to LOCK (0).
3. Disconnect navigation unit connector B (32P) and the navigation display unit 28P connector.
4. Check for loose terminals at navigation unit connector B (32P) and the navigation display unit 28P connector.

   Are there loose terminals?

   YES—Repair the terminal.■

   NO—Go to step 5.

5. Check for continuity between the terminals of navigation unit connector B (32P) and the navigation display unit 28P connector according to the table.

From terminal		To terminal	
Navigation unit	Navigation display unit	Navigation unit	Navigation display unit
B3 (GRY)	24 (BLK)	B1 (WHT)	8 (WHT)
		B2 (RED)	9 (RED)
		B17 (YEL)	22 (YEL)
		B19 (GRN)	21 (BLU)

NAVIGATION UNIT CONNECTOR B (32P)

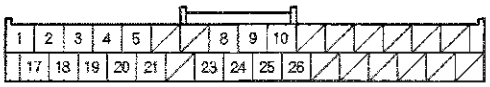

Wire side of female terminals

NAVIGATION DISPLAY UNIT 28P CONNECTOR

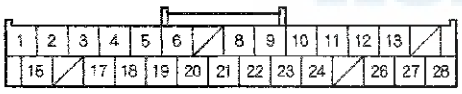

Wire side of female terminals

Is there continuity between any of the terminals?

YES—Short in the wire(s) between the navigation unit and the navigation display unit. Replace the affected shielded harness. ■

NO—Go to step 6.

6. Check for continuity between the appropriate terminals of navigation unit connector B (32P) and the navigation display unit 28P connector based on the missing color(s).

Missing color	Navigation unit connector B (32P)	Navigation display unit 28P connector	Wire color
Blue	B17	22	YEL
Green	B2	9	RED
Red	B1	8	WHT

NAVIGATION UNIT CONNECTOR B (32P)

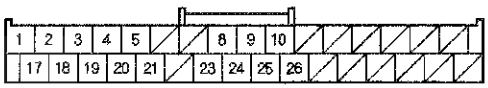

Wire side of female terminals

NAVIGATION DISPLAY UNIT 28P CONNECTOR

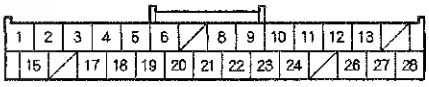

Wire side of female terminals

Is there continuity?

YES—Go to step 7.

NO—Open in the wire(s) between the navigation display unit and the navigation unit. Check for poor connections or loose terminals at the navigation display unit and the navigation unit. If a poor connection or loose terminal is found, replace the affected shielded harness. ■

(cont'd)

Symptom Troubleshooting (cont'd)

7. Check for continuity between the appropriate terminals of navigation unit connector B (32P) and the navigation display unit 28P connector based on the missing color(s).

Missing color	Navigation unit connector B (32P)	Navigation display unit 28P connector
Blue	B17	10, 24
Green	B2	10, 24
Red	B1	10, 24

NAVIGATION UNIT CONNECTOR B (32P)

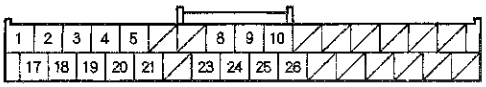

Wire side of female terminals

NAVIGATION DISPLAY UNIT 28P CONNECTOR

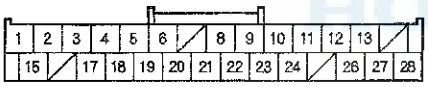

Wire side of female terminals

Is there continuity?

YES—There is a short to body ground in the circuit between the navigation display unit and the navigation unit. Replace the affected shielded harness. ■

NO—Replace the navigation unit. If the problem is still unresolved, replace the navigation display unit (see page 23-241). ■

Picture has lines or rolls

Diagnostic Test: Monitor Check

NOTE:
- Check the vehicle battery condition first.
- Always compare the screen image to a known-good vehicle. If the screen looks the same, inform the customer that it is a characteristic of the system.
- Check the connectors for poor connections or loose terminals.
- Make sure that the correct DVD color and version are installed.
- Inspect the DVD for dirt or damage.
- Check any official Honda service website for more service information about the navigation system.
- Check the navigation screen settings for brightness, contrast, and black level, and check the color screen for map color and menu color.
- Before troubleshooting, make sure you have anti-theft codes for the audio system and the navigation system.
- After troubleshooting, enter the anti-theft codes for the audio system and the navigation system.

1. Check for electronic aftermarket accessories (possibly hidden) mounted near the navigation display unit or the navigation unit.

   Are there any electronic accessories?

   YES—Disable the accessories, and recheck. ■

   NO—Go to step 2.

2. Start up the navigation screen and check it.

   Is the picture scrolling horizontally (left to right or right to left)?

   YES—
   - If the color is normal: Go to step 3.
   - If the picture is scrolling with missing color: Go to step 9.

   NO—Go to step 13.

3. Turn the ignition switch to LOCK (0).

4. Disconnect navigation unit connector B (32P).

5. Disconnect navigation display unit 28P connector.

6. Check for continuity between navigation unit connector B (32P) terminal No. 18 and body ground.

NAVIGATION UNIT CONNECTOR B (32P)

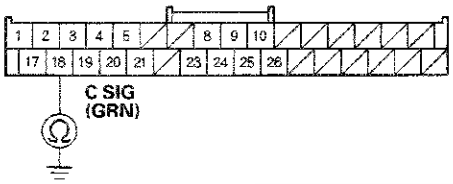

Wire side of female terminals

Is there continuity?

YES—Short to body ground in the wire(s) between the navigation unit and the navigation display unit. Replace the affected shielded harness. ■

NO—Go to step 7.

7. Check for continuity between navigation unit connector B (32P) terminals No. 18 and No. 3, and between terminals No. 18 and No. 19 individually.

NAVIGATION UNIT CONNECTOR B (32P)

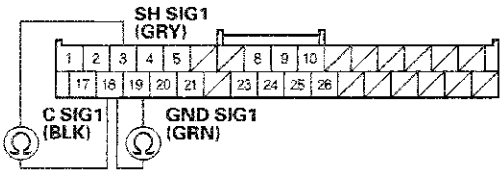

Wire side of female terminals

Is there continuity?

YES—Short in the wires between the navigation unit and the navigation display unit. Replace the affected shielded harness. ■

NO—Go to step 8.

8. Check for continuity between navigation unit connector B (32P) terminal No. 18 and navigation display unit 28P connector terminal No. 23.

NAVIGATION UNIT CONNECTOR B (32P)
Wire side of female terminals

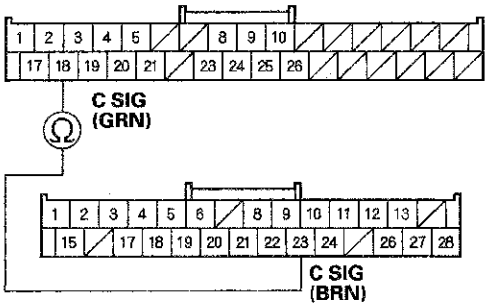

NAVIGATION DISPLAY UNIT 28P CONNECTOR
Wire side of female terminals

Is there continuity?

YES—Substitute a known-good navigation unit (see page 23-240), and retest. If the problem goes away, replace the original navigation unit. If the problem still present, replace the navigation display unit (see page 23-241). ■

NO—Open in the wire(s) between the navigation unit and the navigation display unit. Replace the affected shielded harness. ■

9. Turn the ignition switch to LOCK (0).

10. Disconnect navigation unit connector B (32P).

11. Disconnect navigation display unit 28P connector.

(cont'd)

Symptom Troubleshooting (cont'd)

12. Check for continuity between the terminals of navigation unit connector B (32P) according to the table.

From terminal	To terminals
B18 (GRN)	B1 (WHT), B2 (RED), B17 (YEL)

NAVIGATION UNIT CONNECTOR B (32P)

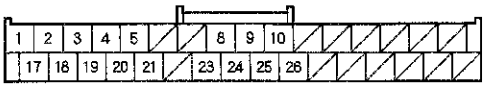

Wire side of female terminals

Is there continuity?

YES—Short in the wires between the navigation unit and the navigation display unit. Replace the affected shielded harness. ■

NO—Substitute a known-good navigation unit (see page 23-240), and retest. If the problem goes away, replace the original navigation unit. If the problem still present, replace the navigation display unit (see page 23-241). ■

13. Go into the Detail Information & Settings, select Monitor Check, and use RGB Color diagnostic under Monitor Check (see page 23-175).

Is the picture missing a red, green, or blue color?

YES—Do troubleshooting for the picture is missing a color or tone or is an odd color (see page 23-220). ■

NO—Operation is normal at this time. Check for loose connections. ■

Interface dial buttons do not work

NOTE:
- Check the vehicle battery condition first.
- Confirm the correct DVD color and version disc is installed in the navigation unit (see page 23-130) as the wrong DVD or software version can cause a hardware malfunction.
- Check the connectors for poor connections or loose terminals.
- Make sure that the correct DVD color and version are installed.
- Inspect the DVD for dirt or damage.
- Check any official Honda service website for more service information about the navigation system.
- Before troubleshooting, make sure you have anti-theft codes for the audio system and the navigation system.
- After troubleshooting, enter the anti-theft codes for the audio system and the navigation system.

1. Start the vehicle.

2. Go into the Detail Information & Settings select Unit Check, and use Hard Key test under Unit Check (see page 23-177).

Does the interface dial buttons work properly?

YES—The system is OK at this time. ■

NO—Go to step 3.

3. Measure the voltage between the interface dial 5P connector terminal No. 4 and body ground.

INTERFACE DIAL 5P CONNECTOR

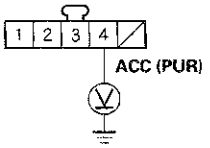

Wire side of female terminals

Is there battery voltage?

YES—Go to step 4.

NO—Repair open in the wire between the driver's under-dash fuse/relay box and the interface dial. ■

4. Measure the voltage between interface dial 5P connector terminal No. 3 and body ground.

INTERFACE DIAL 5P CONNECTOR

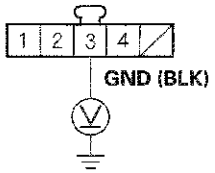

Wire side of female terminals

Is there 0.2 V or less?

YES—Go to step 5.

NO—Repair open or high resistance in the wire between the interface dial and body ground (G401) (see page 22-40). ■

5. Turn the ignition switch to LOCK (0). Disconnect the interface dial 5P connector.

6. Check for continuity between navigation unit connector B (32P) terminal No. 23 and interface dial 5P connector terminal No. 1.

NAVIGATION UNIT CONNECTOR B (32P)
Wire side of female terminals

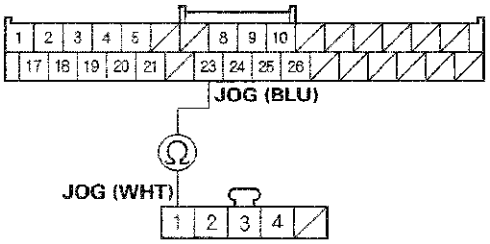

INTERFACE DIAL 5P CONNECTOR
Wire side of female terminals

Is there continuity?

YES—Go to step 7.

NO—Open in the wire between the interface dial and the navigation unit. Replace the affected shielded harness. ■

7. Check for continuity between navigation unit connector B (32P) terminals No. 23 and No. 25.

NAVIGATION UNIT CONNENCTOR B (32P)

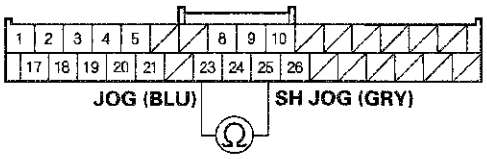

Wire side of female terminals

Is there continuity?

YES—Short in the wires. Replace the affected shielded harness.

NO—Go to step 8.

8. Substitute a known-good interface dial (see page 23-241), and recheck.

Is the system OK?

YES—Replace the original interface dial (see page 23-241). ■

NO—Replace the navigation unit (see page 23-240). ■

Symptom Troubleshooting (cont'd)

GPS icon is white or not shown

Diagnostic Test: Self-Diagnosis Mode

NOTE:
- Check the vehicle battery condition first.
- With good reception, the icon is normally green.
- Make sure the GPS antenna is plugged in.
- Check for any aftermarket accessories or metallic window tinting that may be interfering with the GPS signal.
- Make sure the vehicle is parked outside and away from buildings.
- Refer to GPS Information (see page 23-185) for realtime satellite reception display.

1. Check for aftermarket metallic window tint on the rear window and electronic aftermarket accessories (possibly hidden) mounted near the GPS antenna or the navigation unit.

   Is there aftermarket metallic window tint or electronic accessories?

   YES—Remove tint or the accessories and recheck. ■

   NO—Go to step 2.

2. Turn the ignition switch to ON (II).

3. Go into the Self-Diagnosis Mode, and use the System Links diagnostic (see page 23-170) to check the GPS antenna.

   Is the GPS Ant icon red?

   YES—Check for a kinked, crushed, or disconnected GPS antenna wire. If icon is still red, replace the GPS antenna (see page 23-242). ■

   NO—Check that nothing is blocking the GPS antenna located under the package shelf and recheck. Substitute a known-good GPS antenna, and recheck. ■

   - If the symptom is gone, replace the GPS antenna.
   - If the symptom is still present, substitute a known-good navigation unit and recheck. If the symptom is gone, replace the original navigation unit (see page 23-240).

Voice guidance cannot be heard, is broken up, or there is static

Diagnostic Test: Self-Diagnosis Mode

NOTE:
- Check the vehicle battery condition first.
- Check the navigation volume level (see Owner's Manual).
- Check the connectors for poor connections or loose terminals.
- If the Hard Error Code stored, check the Hard Error Code troubleshooting first.
- Make sure that the correct DVD color and version are installed.
- Inspect the DVD for dirt or damage.
- Before troubleshooting, make sure you have anti-theft codes for the audio system and the navigation system.
- After troubleshooting, enter the anti-theft codes for the audio system and the navigation system.

1. Turn the ignition switch to ON (II).

2. Press the SET-UP button.

3. Check the volume and voice feedback setting for the navigation system in set-up.

   Is either set to OFF?

   YES—Set the voice feedback to ON, and select an audible level for the volume. ■

   NO—Go to step 4.

4. Check the audio system operation.

   Can you hear the audio?

   YES—Go to step 5.

   NO—Troubleshoot audio system. ■

5. Select the Self-Diagnosis mode.

6. Check for error code to the Error History.

   Is the Hard Error Code in store?

   YES—Refer to the Hard Error Code troubleshooting. ■

   NO—Go to step 7.

7. Substitute and a known-good audio unit, and recheck.

   Is the system OK?

   YES—Replace the audio unit (see page 23-110). ■

   NO—Replace the navigation unit (see page 23-240). ■

Voice control does not work/respond

Diagnostic Test: Mic Level

NOTE:
- Check the vehicle battery condition first.
- Make sure that the correct DVD color and version are installed.
- Check any official Honda service website for more service information about the navigation system.
- Before assuming that a voice complaint is hardware related, ensure that the voice control system is being operated correctly.
  - Make sure you are on the correct screen when trying to issue a voice command. For instance, the command "Find the nearest Italian Restaurant" only works on Map screen. (See the Navigation System manual for a complete list of allowed voice commands for the information being displayed).
  - Close the windows and moonroof.
  - Set the fan speed to low (1 or 2).
  - Adjust the air flow from the air conditioning vents so that they do not blow against the microphone on the ceiling.
  - Pause after pressing the navigation TALK button, then give a voice command clearly in a natural speaking voice.
    If the system cannot recognize your command, speak louder.
  - If you speak a command with something in your mouth, or your voice is too husky, or high pitched, the system may misunderstand your command.
- Check the connectors for poor connections or loose terminals.
- Check for a loose roof console microphone; if it's loose, tighten it.
- Before troubleshooting, make sure you have anti-theft codes for the audio system and the navigation system.
- After troubleshooting, enter the anti-theft codes for the audio system and the navigation system.
- Determine if the problem only happens to one person, or everyone who uses the system.
- If the system only has a problem with one person's voice, this should be considered a system limitation.

(cont'd)

Symptom Troubleshooting (cont'd)

1. Turn the ignition switch to ON (II).

2. Measure the voltage between the HFL-navigation-ANC microphone 7P connector terminals No. 6 and No. 7 individually.

HFL-NAVIGATION-ANC MICROPHONE 7P CONNECTOR

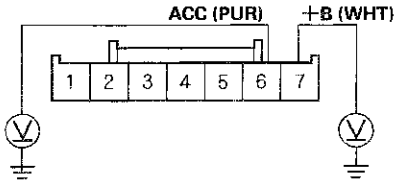

Wire side of female terminals

Is there battery voltage?

YES—Go to step 3.

NO—If the +B wire does not have voltage, repair open in the wire between the under-hood fuse/relay box and the HFL-navigation-ANC microphone 7P connector. If the ACC wire does not have voltage, repair open in the wire between the under-dash fuse/relay box and the HFL-navigation-ANC microphone 7P connector.■

3. Measure the voltage between HFL-navigation-ANC microphone 7P connector terminal No. 1 and body ground.

HFL-NAVIGATION-ANC MICROPHONE 7P CONNECTOR

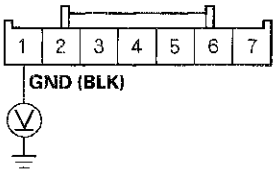

Wire side of female terminals

Is there 0.2 V or less?

YES—Go to step 4.

NO—Repair open or high resistance in the wire between the HFL-navigation-ANC microphone and body ground (G501) (see page 22-32).■

4. Go into the Self-Diagnosis Mode select, Mic Icon Menu, and use the Mic Level test under Functional Setup (see page 23-182) to check the operation of the navigation TALK and BACK buttons.

Are the navigation TALK and BACK buttons operational?

YES—Go to step 5.

NO—Check for an open or short to ground on navigation unit connector C (16P) terminal No. 12.■

5. Use the Mic Level diagnostic under Functional Setup (see page 23-182) to check the operation of the microphone.

Is the microphone operational?

YES—Check the operation of the voice control system (see the Navigation System Manual).■

NO—Go to step 6.

6. Turn the ignition switch to LOCK (0).

7. Disconnect the HandsFreeLink control unit 28P connector.

8. Disconnect the navigation unit connector C (16P).

9. Check for continuity between body ground and navigation unit connector C (16P) terminal No. 8 and No. 16 individually.

NAVIGATION UNIT CONNECTOR C (16P)

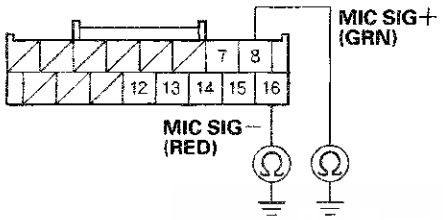

Wire side of female terminals

Is there continuity?

YES—Replace the affected shielded harness.

NO—Go to step 10.

10. Check for continuity between navigation unit connector C (16P) terminals No. 8 and No. 16.

NAVIGATION UNIT CONNECTOR C (16P)

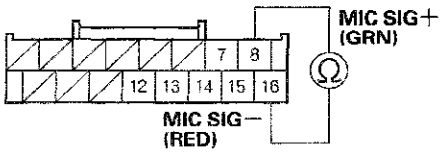

Wire side of female terminals

Is there continuity?

YES—Replace the affected shielded harness.

NO—Go to step 11.

11. Check for continuity between navigation unit connector C terminal No. 8 to No 15 and No. 16, individually.

NAVIGATION UNIT CONNECTOR C (16P)

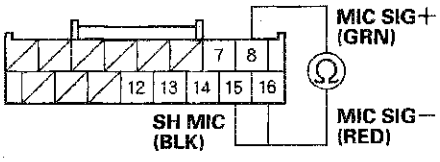

Wire side of female terminals

Is there continuity?

YES—Replace the affected shielded harness. ■

NO—Substitute known-good components in this order until the problem goes away: ■

- HFL-navigation-ANC microphone (see page 23-242).
- HandsFreeLink control unit (see page 23-281).
- Navigation unit (see page 23-240).

Symptom Troubleshooting (cont'd)

DVD screen error messages

Diagnostic Test: Car Status

NOTE:
- Check the vehicle battery condition first.
- Confirm the correct DVD color and version is installed in the navigation unit (see page 23-130).
- Refer to General Troubleshooting for a list of common DVD screen error messages and the probable causes (see page 23-192).
- Check any official Honda service website for more service information about the navigation system.
- Go into the Diagnostic mode and use the ECU Info diagnostic (see page 23-177) to check the status of the DVD cover.
- Inspect the navigation DVD for scratches or damage.
- The following troubleshooting is for the error message shown on the error messages table (see page 23-192).

1. Check the DVD-ROM reading surface for scratches and finger prints.

   Are there any scratches or finger prints on the DVD-ROM reading surface?

   YES—Clean or replace the DVD-ROM (see page 23-239).■

   NO—If the problem occurs occasionally when the system is cold, this is normal. If the problem occurs frequently when driving, replace the navigation unit (see page 23-240).■

Navigation cannot control HVAC by voice command

NOTE:
- Check the vehicle battery condition first.
- Check the connectors for poor connections or loose terminals.
- Check for and resolve all CAN DTCs before troubleshooting the navigation system.
- If the Hard Error Code stored, check the Hard Error Code troubleshooting first.
- Before troubleshooting, make sure the anti-theft codes for the audio system and the navigation system.
- After troubleshooting, enter the anti-theft codes for the audio system and the navigation system.
- Verify that the correct navigation unit is installed for this model. Go into the Diagnostic mode and use Version (see page 23-189).
- Make sure that the correct DVD color and version are installed.
- Check any official Honda service website for more service information about the navigation system.

1. Connect the HDS to the DLC. Check for B-CAN or F-CAN DTCs in the data list.

   Are there any DTCs in the B-CAN or F-CAN systems?

   YES—Troubleshoot and repair all CAN related DTCs, and then retest.

   NO—Go to step 2.

2. Turn the ignition switch to ON (II).

3. Select the Self-Diagnosis mode.

4. Check for error code in the Error History.

   Are there any Hard Error Code stored?

   YES—Refer to the Hard Error Code troubleshooting.■

   NO—Go to step 5.

5. Substitute a known-good climate control unit. Reconnect all connectors, and retest.

   Does the symptom go away?

   YES—Replace the original climate control unit (see page 21-180).■

   NO—Replace the navigation unit (see page 23-240). ■

Display day/night mode does not work or does not work properly

NOTE:
- Turn the headlight, on and check that the dash brightness setting is not set to high.
- Check the connectors for poor connections or loose terminals.
- Always check for and resolve all CAN DTCs before troubleshooting the navigation system.
- Verify that the correct navigation unit is installed for this model. Go into the Diagnostic mode, and use Version (see page 23-189).
- Make sure that the correct DVD color and version are installed.
- Inspect the DVD for dirt or damage.
- Check any official Honda service website for more service information about the navigation system.

1. Turn the headlights on, and adjust the dash brightness up and down, then to the middle range.

   Does the display change to day and night modes when turning the headlights on and off?

   YES—The system is OK at this time.■

   NO—Go to step 2.

2. Cover the sunlight sensor on the dash, then turn the headlights on and off.

   Does the navigation display dim and brighten normally?

   YES—The system is OK at this time.

   NO—Check the ILL+ circuit for an open or short to ground between the navigation display unit to the gauge control module. If OK, substitute known-good units in this order and recheck the system:

   - Navigation unit
   - Climate control unit
   - Gauge control module

Symptom Troubleshooting (cont'd)

System locks up or freezes constantly

NOTE:
- Check the vehicle battery condition first.
- Always check for and resolve all CAN DTCs before troubleshooting the navigation system.
- Verify that the correct navigation unit is installed for this model. Go into the Diagnostic mode and use Version (see page 23-189).
- Make sure that the correct DVD color and version are installed.
- Inspect the DVD for dirt or damage.
- Check any official Honda service website for more service information about the navigation system.
- Before troubleshooting, make sure you have anti-theft codes for the audio system and the navigation system.
- After troubleshooting, enter the anti-theft codes for the audio system and the navigation system.
- Check the DVD for damage or scratches.
- Check for connectors for poor connections or loose terminals.

1. Turn the ignition switch to ON (II).

2. Remove the DVD, and check the DVD reading surface for scratches and finger prints.

   Are there any scratches or finger prints on the DVD-ROM reading surface?

   YES—Clean or replace the DVD-ROM (see page 23-239) and recheck.■

   NO—Go to step 2.

3. Turn the ignition switch to LOCK (0), and then back to ON (II).

   Does the system reboot, lock up, or freeze?

   YES—Replace the navigation unit (see page 23-240). ■

   NO—The system is OK at this time. Go into the Diagnostic mode, and use the Unit Check diagnosis (see page 23-177) to check the navigation unit and navigation display unit status. If the status is NG, replace the affected units.■

Vehicle icon wanders across the map when driving (does not follow a displayed road) or map vehicle ICON spins

NOTE:
- Check the vehicle battery condition first.
- This is not the same condition as when driving off-road (or on a fire or logging road).
- This condition is caused by a loss of map matching from a bad sensor input. Check for aftermarket or other objects that can block the GPS signal. Always perform Map matching (see page 23-129) before proceeding with the troubleshooting.
- Always check for and resolve all CAN DTCs before troubleshooting the navigation system.
- Verify that the correct navigation unit is installed for this model. Go into the Diagnostic mode and use Version (see page 23-189).
- Make sure that the correct DVD color and version are installed.
- Check for aftermarket metallic window tinting.
- Inspect the DVD for dirt or damage.
- Check any official Honda service website for more service information about the navigation system.
- Before troubleshooting, make sure you have anti-theft codes for the audio system and the navigation system.
- After troubleshooting, enter the anti-theft codes for the audio system and the navigation system.
- Check the DVD for damage or scratches.
- Check for connectors for poor connections or loose terminals.

1. Check the GPS icon on the navigation screen.

   Is the GPS icon white or missing?

   YES—Do the troubleshooting for GPS icon is white or not shown (see page 23-226).■

   NO—Go to step 2.

2. Go into the Self-Diagnostic mode, and use the Yaw Rate diagnosis (see page 23-187) to check the yaw rate sensor.

   Is the yaw rate sensor OK?

   YES—Go to step 3.

   NO—Replace the navigation unit (see page 23-240). ■

3. Go into the Diagnostic mode, and use the Car Status diagnosis (see page 23-188) to check the vehicle speed pulse (VSP) and the BACK signals.

   Are the vehicle speed pulse and the BACK signals OK?

   YES—The problem may be a characteristic of the system. Check to see if the problem occurs in the same place in a known-good vehicle. If it does, the problem could be in the database. Go to step 4.

   NO—
   - If the problem is the vehicle speed pulse, troubleshoot the vehicle speed signal circuit. LT BLU wire for open or short. If OK, swap a known-good ECM/PCM. If the problem or symptom goes away, replace the original ECM/PCM.
   - If the BACK signal is indicated ON (I), when in any shift lever position other than reverse, troubleshoot the back-up light switch circuit or MICU (A/T). ■

4. Substitute a known-good navigation unit, and check to see if the problem occurs in the same place.

   Does the problem occur in the same place?

   YES—The problem is in the database and should be considered a characteristic of the system. Report the problem according to the Navigation System Owner's Manual under Reporting Errors and look for improvements in future databases. ■

   NO—Replace the navigation unit (see page 23-240). ■

Navigation system will not accept security code

NOTE:
- Check the vehicle battery condition first.
- The system will not operate without the 4-digit security (anti-theft) code. Follow the this procedure. (After 10 consecutive tries, you must cycle the key to continue trying)
- The Navigation System Diagnosis and Core Return Form is available on ISIS, under Job aids, and can be printed out for recording this information. This information will help the reman facility determine what caused the failure.
- Always check for and resolve all CAN DTCs before troubleshooting the navigation system.
- Verify that the correct navigation unit is installed for this model. Go into the Diagnostic mode and use Version (see page 23-189).
- Check connectors for poor connections or loose terminals.
- Before troubleshooting, make sure you have anti-theft codes for the audio system and the navigation system.
- Make sure that the correct DVD color and version are installed.
- Inspect the DVD for dirt or damage.
- Check any official Honda service website for more service information about the navigation system.

1. Go into the Diagnostic mode, and use the ECU Info under the Unit Check diagnosis (see page 23-177). A brief diagnosis runs for 20 seconds, and the serial number is displayed.

   Is the serial number displayed?

   YES—Go to step 4.

   NO—Go to step 2.

2. Remove the navigation unit (see page 23-240).

3. Check the serial number on the label on the underside of the navigation unit.

   Is the serial number confirmed on the underside of the navigation unit?

   YES—Go to step 4.

   NO—Replace the navigation unit (see page 23-240). ■

(cont'd)

Symptom Troubleshooting (cont'd)

4. Using the serial number, look up the navigation security code in the Interactive Network. (click: Service, Vehicle Information, Anti-Theft code Inquiry, and then select Navigation from the product dropdown box). Enter the serial number.

   Is a 4-digit code displayed on the screen?

   YES—Go to step 5.

   NO—Call the Warranty Department to obtain the code (the telephone number is in the PDI service bulletin). Then go to step 5.

5. Check that the obtained code works to bypass the code screen in the navigation system.

   Does the code work?

   YES—The system is OK at this time. Return the vehicle to the customer and give them the anti-theft code. ■

   NO—Go to step 6.

6. Try entering four zeros (0000) as the code.

   Do the four zeros work to bypass the code screen?

   YES—Replace the navigation unit, and enter Security code is 0000 in the problem description field of the core return form. ■

   NO—Replace the navigation unit, and enter Won't take security code, in the "problem description field" of the core return form; (as proof, enclose the sticker that contains the Serial number and the Code). ■

Navigation display stays on with ignition switch in LOCK (0)

NOTE:
- Check for aftermarket accessories that may interfere with the navigation system.
- Check the connectors for poor connections or loose terminals.
- Before troubleshooting, make sure you have anti-theft codes for the audio system and the navigation system.
- After troubleshooting, enter the anti-theft codes for the audio system and the navigation system.
- The vehicle may have been used for a show event. Check for a short jumper harness in-line with the navigation unit connector C. If a jumper harness is present, remove it, and return it to Tech Line.

1. Remove the key from the ignition.

   Does the navigation screen stay on?

   YES—Go to step 2.

   NO—The system is OK at this time. ■

2. Check for battery voltage on navigation unit connector A (8P) terminal No. 2.

   Is there battery voltage?

   YES—Troubleshoot a short to battery voltage on the ACC circuit. ■

   NO—Replace the navigation unit (see page 23-240). ■

Navigation cannot control audio system

Diagnostic Test: System Links

NOTE:
- Check the vehicle battery condition first.
- Check for and resolve all CAN DTCs before troubleshooting the navigation system.
- Verify that the correct navigation unit is installed for this model. Go into the Diagnostic mode and use Version (see page 23-189).
- Check for connectors for poor connections or loose terminals.
- Before troubleshooting, make sure you have anti-theft codes for the audio system and the navigation system.
- After troubleshooting, enter the anti-theft codes for the audio system and the navigation system.
- Make sure that the correct DVD color and version are installed.
- Inspect the DVD for dirt or damage.
- Check any official Honda service website for more service information about the navigation system.

1. Turn the ignition switch to ON (II).

2. Make sure the anti-theft code for the audio system is entered.

3. Go into the Diagnostic mode, and use the Self-Diagnosis Mode (see page 23-170).

   Is the Radio icon red?

   YES—Do the troubleshooting for the voice guidance cannot be heard (see page 23-226).■

   NO—Go to step 4.

4. Substitute a known-good navigation unit (see page 23-240), and recheck.

   Can the navigation system control audio/disc?

   YES—Replace the navigation unit (see page 23-240). ■

   NO—Do the audio system troubleshooting.■

Navigation cannot control XM radio

NOTE:
- Check the vehicle battery condition first.
- Make sure that the correct DVD color and version are installed.
- Check any official Honda service website for more service information about the navigation system.

1. Start the vehicle.

2. Make sure the anti-theft code for the audio system is entered.

3. Go into the Diagnostic mode, and use the System Links diagnosis (see page 23-170).

   Is the XM icon red?

   YES—Do the troubleshooting for the voice guidance cannot be heard (see page 23-226).■

   NO—Go to step 4.

4. Substitute a known-good navigation unit (see page 23-240).

   Can the navigation system control XM radio?

   YES—Replace the navigation unit (see page 23-240). ■

   NO—Replace the XM receiver (see page 23-115).■

Symptom Troubleshooting (cont'd)

Navigation frequently asks for anti-theft code and/or needs GPS initialization

NOTE:
- Check the vehicle battery condition first.
- This is often caused by a loss of battery power or a poor ground.
- Make sure that the correct DVD color and version are installed.
- Check any official Honda service website for more service information about the navigation system.

1. Check for an open on navigation unit connector A (8P) terminals No. 1, No. 2 and No. 4 (ground).

   Are the circuits OK?

   YES—Replace the navigation unit (see page 23-240). ■

   NO—Repair the circuits. ■

The Acura Globe Screen (not the Honda Globe Screen) appears every time the vehicle is started

NOTE: The navigation DVD and the navigation unit are correct for the vehicle, but earlier and possibly later versions of the navigation software may have been installed. When this happens, the software may not be recognized by the navigation unit, and could cause the navigation unit to revert to a an Acura model profile.

1. Remove the navigation unit (see page 23-240) and verify that the part number printed on the navigation unit label is the correct one for the year/model vehicle you are working on.

   Is the correct navigation unit installed based on the part number?

   YES—Go to step 2.

   NO—Replace the navigation unit with the correct unit for the year/model vehicle you are working on. ■

2. Reinstall the navigation unit.

3. Remove the navigation DVD.

4. Note the software version marked on the DVD label and verify if it is the correct version for the vehicle year/model you are working on by checking any official Honda service website, and searching for any related service information about the navigation system and navigation software.

   Is the software version marked on the DVD label the correct one for the vehicle year/model you are working on?

   YES—Replace the navigation unit (see page 23-240). ■

   NO—Go to step 5.

5. Obtain the correct version DVD (see page 23-129) and install it.

   Does the navigation system boot-up with the Honda Globe Screen?

   YES—The problem is resolved, troubleshooting is complete. ■

   NO—The system still shows Honda Globe Screen. Replace the navigation unit (see page 23-240). ■

Navigation unit will not eject or accept the navigation DVD

1. Check No. 15 (10 A) fuse in the under-hood fuse/relay box and No. 18 (7.5 A) fuse in the driver's under-dash fuse/relay box.

   Are the fuses OK?

   YES—Go to step 2.

   NO—Replace the blown fuse(s), and recheck. ■

2. Turn the ignition switch to ON (II).

3. Eject the navigation DVD from the navigation unit (see page 23-239).

   Does the navigation DVD eject?

   YES—Go to step 4.

   NO—Go to step 5.

4. Reinsert the navigation DVD into the navigation unit.

   Does the navigation unit accept the navigation DVD?

   YES—No problems at this time, the system is normal. Inspect for loose or poor connections at navigation unit connector A (8P) terminals No. 1, No. 2, and No. 4. ■

   NO—Replace the navigation unit (see page 23-240). ■

(cont'd)

Symptom Troubleshooting (cont'd)

5. Measure the voltage between navigation unit connector A (8P) terminal No. 4 and body ground.

NAVIGATION UNIT CONNECTOR A (8P)

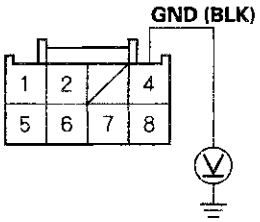

Wire side of female terminals

Is there less than 0.1 V?

YES—Go to step 6.

NO—Repair open or high resistance in the BLK wire between navigation unit connector A (8P) and body ground (G651).■

6. Measure the voltage between navigation unit connector A (8P) terminal No. 1 and No. 2 to body ground.

NAVIGATION UNIT CONNECTOR A (8P)

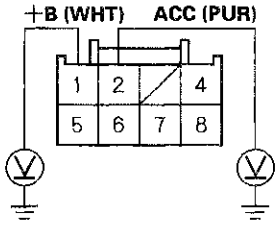

Wire side of female terminals

Is there battery voltage?

YES—Replace the navigation unit (see page 23-240). ■

NO—Repair open in the WHT wire between navigation unit connector A (8P) terminal No. 1 and the No. 15 (10 A) fuse in the under-hood fuse/relay box or navigation unit connector A (8P) terminal No. 2 and the No. 18 (7.5 A) fuse in the driver's under-dash fuse/relay box.■

Forced Starting of Display

Special tools required
SCS Service Connector 07PAZ-0010100

1. Turn the ignition switch to LOCK (0).

2. Connect the SCS service connector (A) to the navigation service connector (B) located behind the navigation unit.

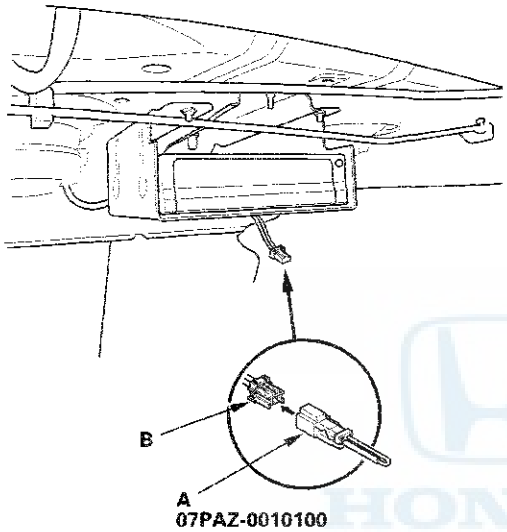

3. Turn the ignition switch to ON (II).

4. Check that the diagnosis menu for the picture diagnosis starts up, and then changes to the system link menu.

   NOTE: If the display fails to display the system link screen, refer to no picture is displayed (see page 23-218).

DVD-ROM Replacement

NOTE:
- Check any official Honda service website for more service information about the navigation system.
- Do not replace the DVD-ROM to give a customer a preview of an update DVD.

1. Turn the ignition switch to ON (II).

2. Push the open button (A) of the navigation unit located on the left side of the trunk.

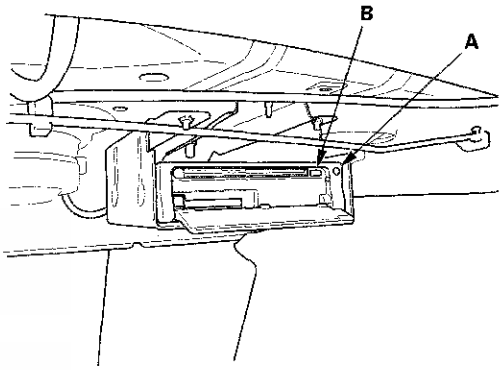

3. Press the EJECT button (B).

4. Remove the DVD-ROM

5. Insert the new DVD-ROM with the white label facing up.

6. Close the front cover. Do not turn the ignition switch to LOCK (0); watch the navigation screen until the data is downloaded to the navigation unit.

7. Do the Map Matching (see page 23-129).

   NOTE: After servicing, the front cover and PC card slot door must be closed. If you start up the navigation system with the front cover or PC card slot door open, the display indicates an error message.

Navigation Unit Removal/Installation

NOTE:
- Before you replace the navigation unit, back-up the customer data using system diagnostic mode Save Users Memory under the Functional Set up (see page 23-183).
- If the navigation unit is replaced or disconnected, a Map Matching must be done (see page 23-129).

1. Turn the ignition switch to ON (II).
2. Eject the DVD from the original navigation unit (see page 23-239). To avoid scratching or damaging the DVD, temporarily place the DVD in a jewel case.

   NOTE: If the DVD does not eject, refer to symptom troubleshooting Navigation unit does not eject or accept the navigation DVD.
3. Turn the ignition switch to LOCK (0).
4. Remove the four bolts (A) from the navigation unit (B).

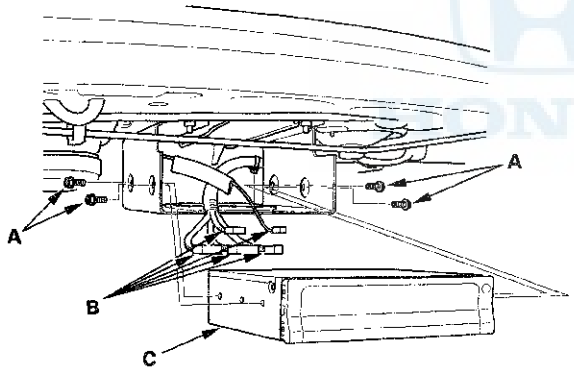

5. Disconnect the navigation unit connectors (B).
6. Remove the navigation unit (C).
7. Install the unit in the reverse order of removal.
8. Install the navigation DVD, then enter the 4-digit security code.
9. Do the system initialization (see page 23-128).
10. Give the new security code to the customer.
11. Turn the ignition switch to ON (II), then reinstall the customer's original navigation DVD, verifying that the DVD is free of scratches or smudges.
12. Check any official Honda service website for more service information about patches for the navigation system. Apply any prescribed patches to the new navigation unit.

    NOTE: Simply transferring the navigation DVD from the original navigation unit to the new navigation unit does not assure the correct software for the vehicle will be loaded into the new navigation unit. Doing the navigation DVD transfer without doing software patches may cause the new navigation unit to appear to be malfunctioning.
13. Enter the new navigation anti-theft code.
14. Park the vehicle outside, and do the GPS initialization (see page 23-128).
15. Give the new navigation anti-theft code to the customer.

Navigation Display Unit Removal/ Installation

1. Remove the audio unit (see page 23-110), then remove the center display visor (see page 20-158).

2. Remove the screws and bolts, then pull out the navigation display unit (A).

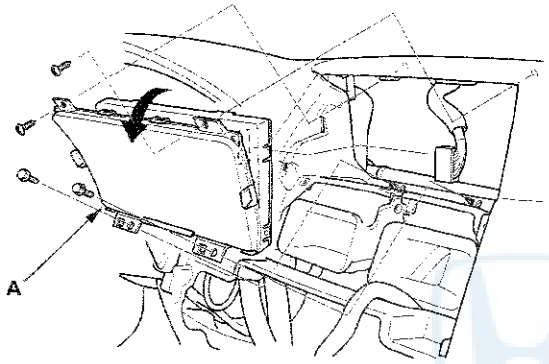

3. Install the unit in the reverse order of removal. Be careful not to drop the forward screw behind the dashboard.

Interface Dial Removal/Installation

1. Remove the audio unit (see page 23-110).

2. Remove the screw and harness cover (A).

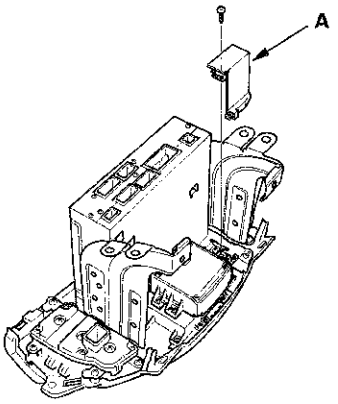

3. Remove the screws and interface dial (A).

   NOTE: If the hard buttons do not work, but the jog dial does, recheck the interface dial connector (B) connection.

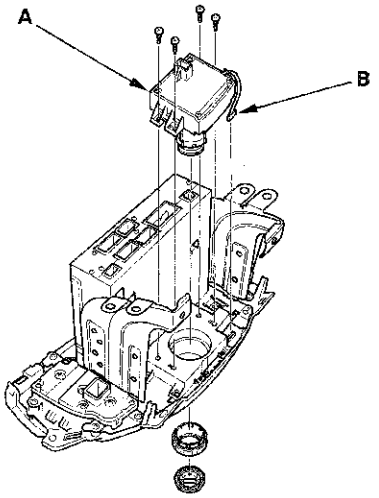

4. Install the dial in the reverse order of removal.

HFL-Navigation-ANC Microphone Removal/Installation

NOTE:
- Put on gloves to protect your hands.
- Take care not to scratch the dashboard and related parts.
- Lay a workshop towel under the parts when working on them to protect the face panel from scratches or other damage.

1. Remove the roof console (see page 20-131).
2. Remove the screws and the HFL-navigation-ANC microphone (A).

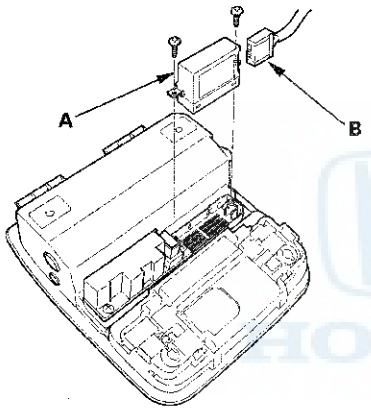

3. Disconnect the connectors (B) from the HFL-navigation-ANC microphone.
4. Install the microphone in the reverse order of removal.

GPS Antenna Removal/Installation

1. Remove the rear shelf (see page 20-119).
2. Disconnect the GPS antenna connector (A), and remove the bolt (B).

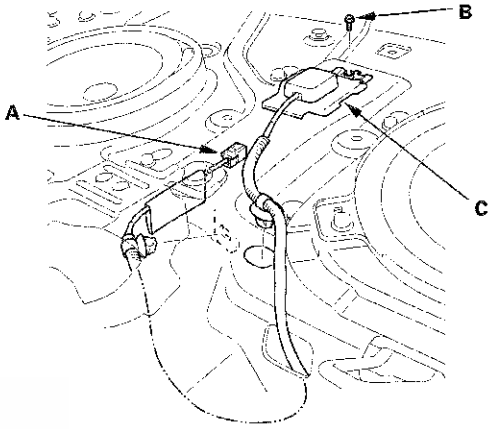

3. Remove the GPS antenna (C).
4. Install the antenna in the reverse order of removal.

Voice Control Switch Test

1. Remove the voice control switch (see page 17-25).

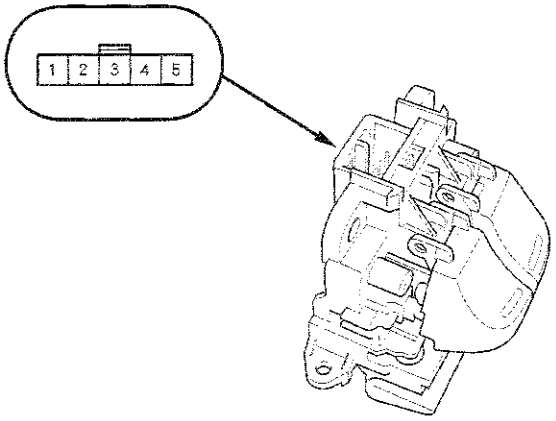

2. Measure the resistance between the No. 2 and No. 4 terminals in each switch position according to the table.

Position	Resistance
No button pressed	About 10 kΩ
Navigation TALK button pressed	About 2.2 kΩ
Navigation BACK button pressed	About 700 Ω

3. If the resistance is not as specified, replace the voice control switch (see page 23-243).

Voice Control Switch Replacement

1. Remove the steering wheel (see page 17-24).
2. Remove the voice control switch (see page 17-25).
3. Install the voice control switch in the reverse order of removal.

Electrical Compass

Component Location Index

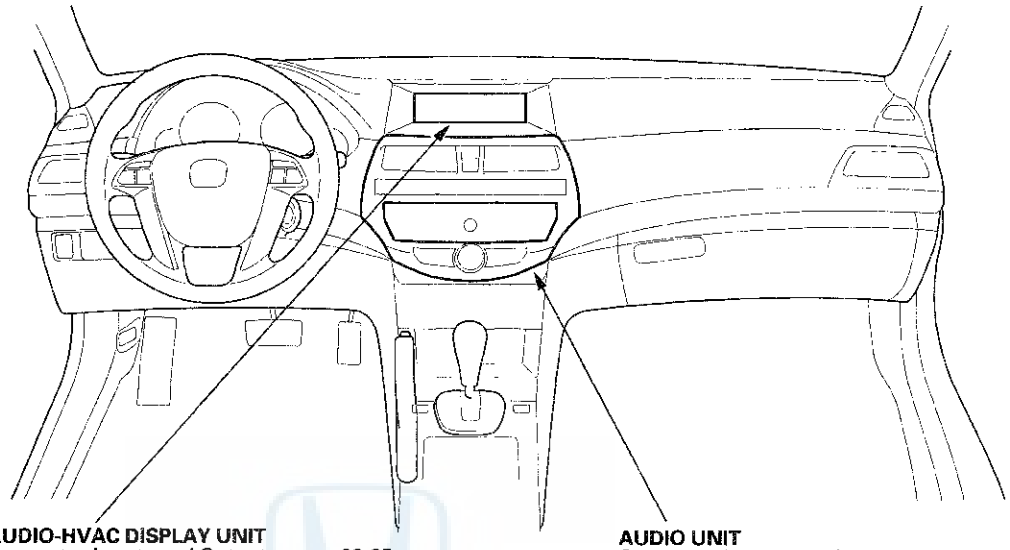

AUDIO-HVAC DISPLAY UNIT
Connector Inputs and Outputs, page 23-35
Removal/Installation, page 23-114

AUDIO UNIT
Connector Inputs and Outputs, page 23-17
Removal/Installation, page 23-111

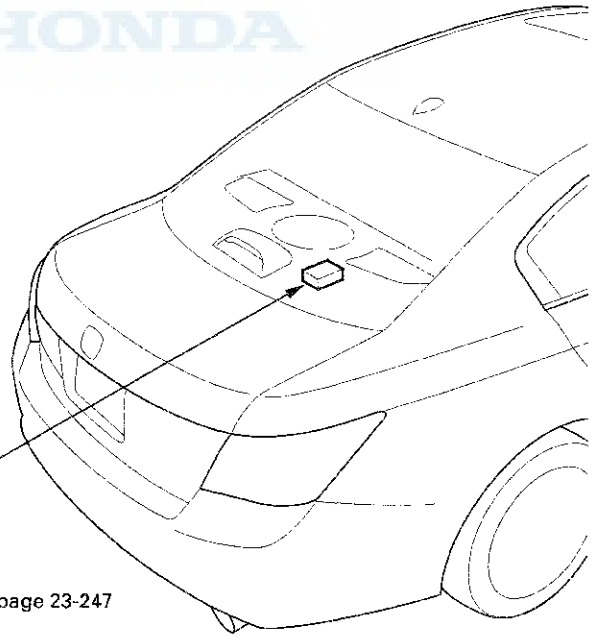

ELECTRICAL COMPASS UNIT
(Without navigation)
Connector Inputs and Outputs, page 23-247
Input Test, page 23-251

Symptom Troubleshooting Index

Symptom	Diagnostic procedure	Also check for
Azimuth information is not shown on the display	Do the input test (see page 23-251)	Check that the electrical compass unit is properly connected.
No picture is shown on the display	Do the audio system troubleshooting (see page 23-75)	The display brightness setting.
Compass shows wrong direction	Do the compass zone selection and calibration (see page 23-249)	Check if the zone setting is correct for the vehicle geographical location.

HONDA

Electrical Compass

System Description

Overview

The electrical compass shows the azimuth information in 8-directions (N, NE, E, SE, S, SW, W, NW) to the audio-HVAC display unit via the audio unit.

When the ignition switch is turned to ACCESSORY (I), the electrical compass unit begins to communicate with the audio unit. When you turn the ignition switch to ON (II), the self-test mode begins automatically.

The self-test function checks for the current voltage, non-volatile memory (NVM), and ROM status in the electrical compass unit. If the unit detects a malfunction during the self-test, it flashes segments of the compass information (CAL and NW) in the audio-HVAC display unit to indicate a problem.

The electrical compass unit has a self-calibration function. It detects and compensates for magnetic anomalies caused by bridges, subways, and large steel structures. When the vehicle leaves an area with strong magnetic interference (2400 mG or more), the electrical compass unit automatically begins calibrating. If needed, you can manually calibrate the compass (see page 23-249).

Zone selection is required to compensate for the difference between magnetic North and geographic North. This deviation is referred to as declination, and the compass compensates for declination when you select the zone where the vehicle is located (see page 23-249).

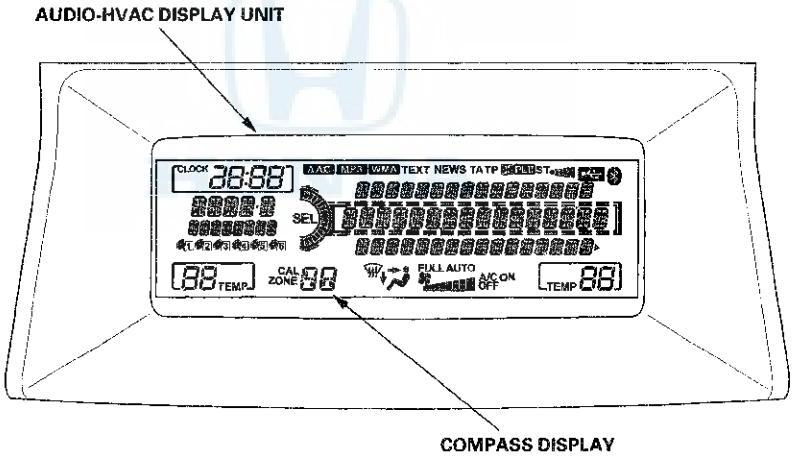

System Diagram

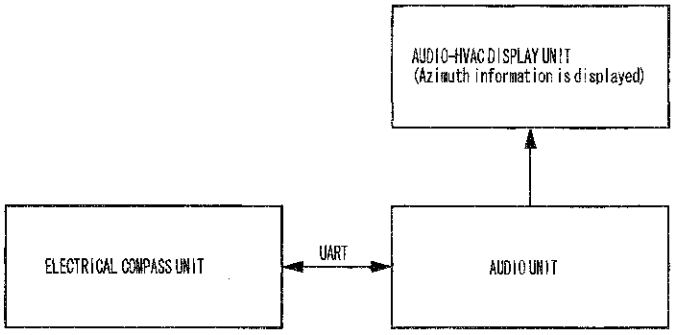

Electrical Compass Unit Connector Inputs and Outputs

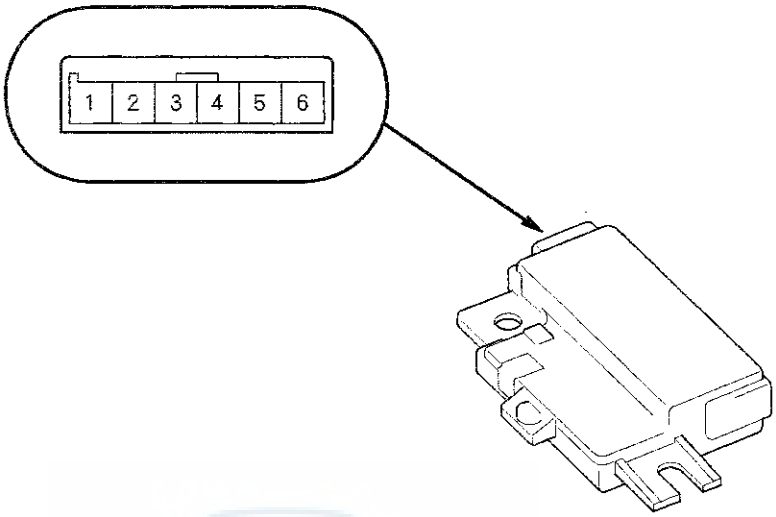

Electrical Compass Unit 6P Connector

Cavity	Wire	Connects to
1	BRN	Power source for ignition switch (IG1)
2	BLK	Ground (G651) (GND)
3	LT BLU	Gauge control module (DISP RX +)
4	PNK	Gauge control module (DISP RX −)
5	ORN	Gauge control module (DISP TX +)
6	RED	Gauge control module (DISP TX −)

Electrical Compass

Circuit Diagram

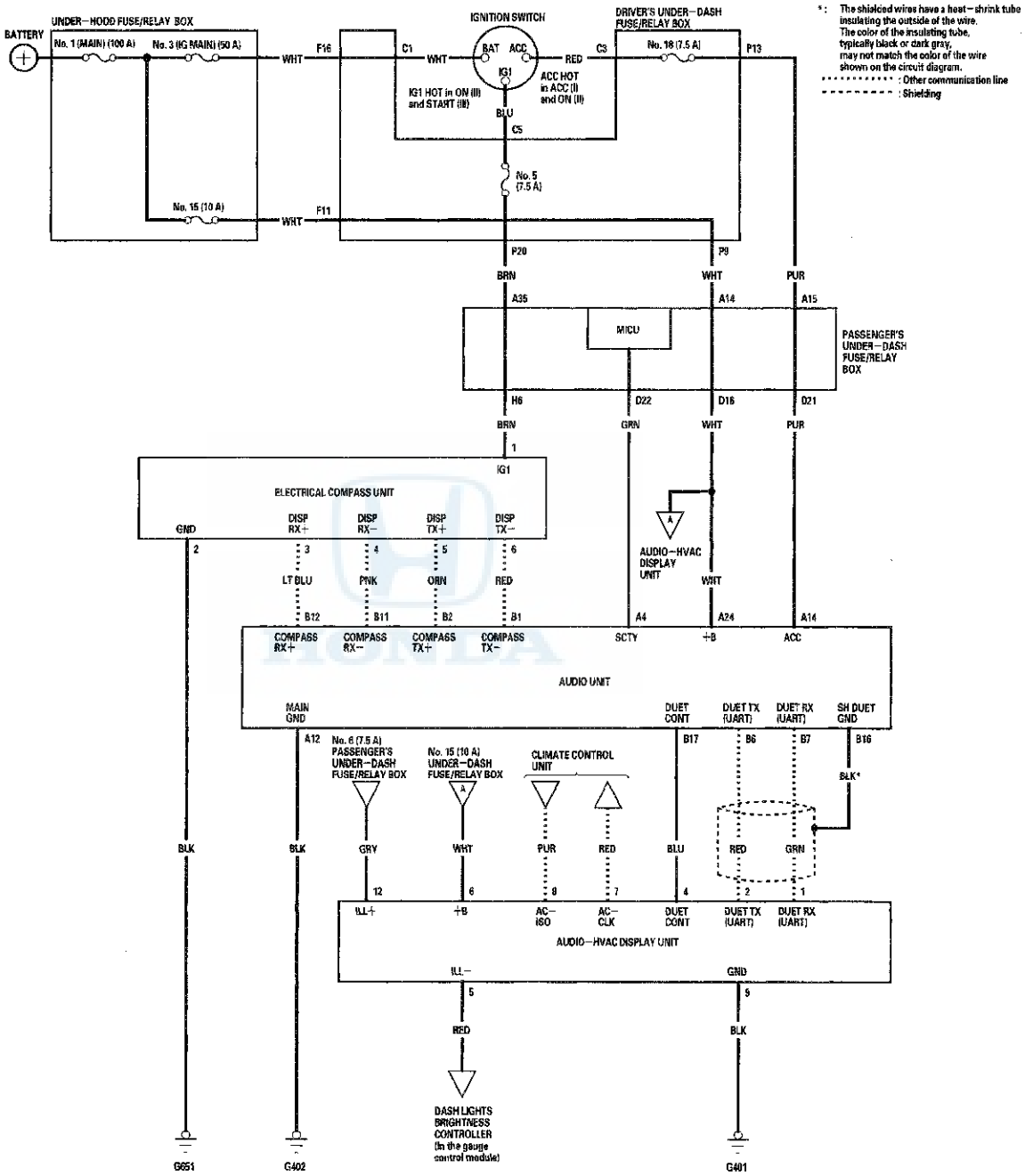

Electrical Compass Zone Selection and Calibration

NOTE:
- You should do this procedure any time the electrical compass unit is replaced.
- You should do this procedure in an open area away from buildings, power lines, and other vehicles.
- If you see "——" and the CAL indicator is shown in the audio-HVAC display, the compass is self-calibrating.
- The compass may need to be manually calibrated after exposure to a strong magnetic field. If the compass seems to be continually showing the wrong direction, and is not self-calibrating, do the following.

1. Check the No. 15 (10 A) fuse in the under-hood fuse/relay box and the No. 5 (7.5 A) and No. 18 (7.5 A) fuses in the driver's under-dash fuse/relay box.

2. Turn the ignition switch to ON (II), then press and hold the MENU button (A) until it beeps (about 2 seconds).

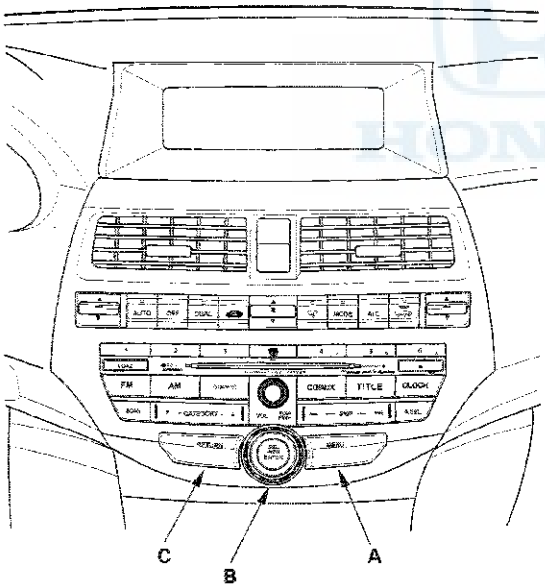

3. Turn the selector knob (B) to select ZONE.

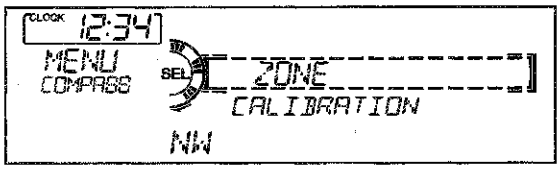

4. Press the selector knob (B) to enter your selection. The display shows the currently selected zone number.

   NOTE: If necessary, press the RETURN button (C) to return to the previous display. Pressing the MENU button (A) cancels the compass setting mode.

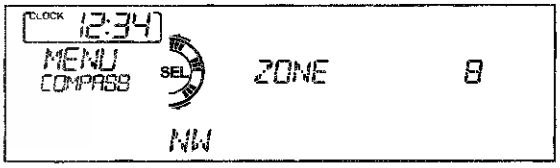

5. Find the zone for your area on the map. If the correct zone is not shown, turn the selector knob (B) to cycle the zone list up or down.

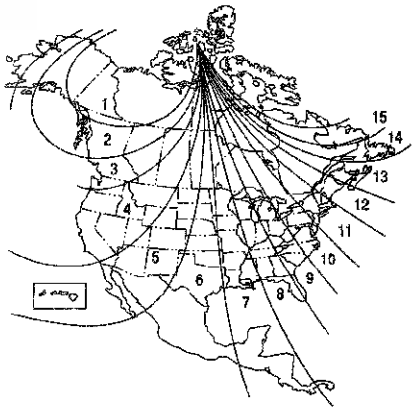

6. Once the correct zone is displayed, press the selector knob. The display then returns to normal.

(cont'd)

Electrical Compass Zone Selection and Calibration (cont'd)

7. Turn the selector knob (B) to select CALIBRATION.

8. Press the selector knob (B) to enter your selection. The display shows PUSH CAL START.

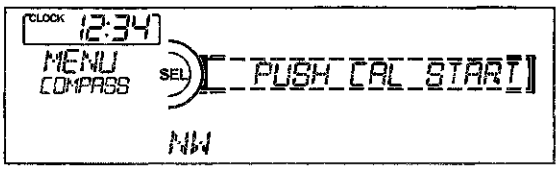

9. Press the selector knob (B), the compass display will blink and the CAL indicator is shown.

10. When the calibration is successfully completed, the CAL indicator goes off and the compass display will stop blinking and show an actual heading.

    NOTE:
    - While setting, pressing the RETURN button (C) returns to the previous display. Pressing the MENU button (A) cancels the compass setting mode.
    - The audio system is not related to the compass system. Even if the compass system is calibrating, the display returns to the normal display which you selected last.
    - Do this procedure in an open area, away from buildings, power lines, and other vehicles.

Electrical Compass Unit Input Test

1. Remove the rear shelf (see page 20-119).
2. Loosen the bolts (A), then pull our the electrical compass unit bracket (B).

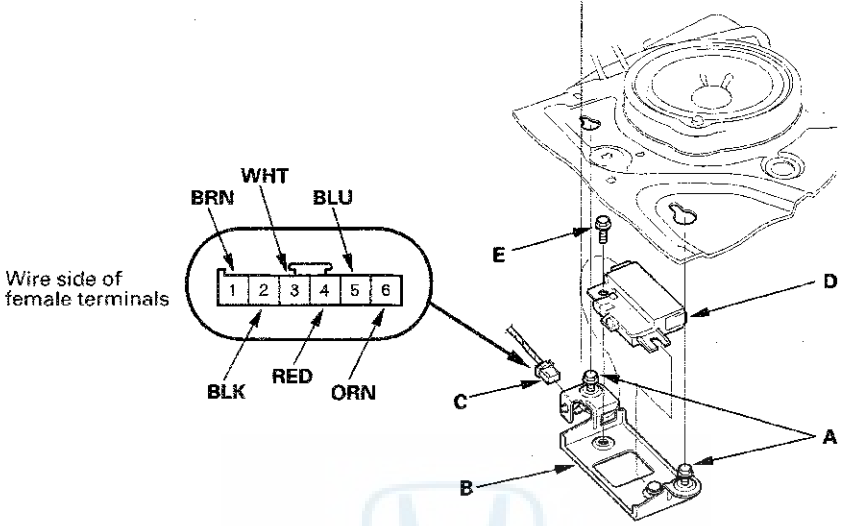

3. Disconnect the 6P connector (C) from the electrical compass unit (D), and remove the mounting bolt (E), then pull out the electrical compass unit.
4. Inspect the connector and socket terminals to make sure they are all making good contact.
   - If the terminals are bent, loose, or corroded, repair them as necessary, and recheck the system.
   - If the terminals look OK, go to step 5.
5. Reconnect the connector to the electrical compass unit. Turn the ignition switch to ON (II) and do the following input tests at the connectors.
   - If any test indicates a problem, find and correct the cause, then recheck the system.
   - If all input tests prove OK, the electrical compass unit is faulty; replace it, and do the compass calibration (see page 23-249).

Cavity	Wire	Test Condition	Test: Desired result	Possible cause if result is not obtained
2	BLK	Under all conditions	Measure the voltage to ground: There should be less than 0.5 V.	• Poor ground (G651) • An open in the wire
1	BRN	Ignition switch ON (II)	Measure the voltage to ground: There should be battery voltage.	• Blown No. 5 (7.5 A) fuse in the driver's under-dash fuse/relay box • An open in the wire
3	LT BLU	Under all conditions	Measure the voltage to ground: There should be about 4 V.	• Faulty audio unit • An open in the wire • A short to ground in the wire
4	PNK	Under all conditions	Measure the voltage to ground: There should be about 4 V.	• Faulty audio unit • An open in the wire • A short to ground in the wire
5	ORN	Under all conditions	Measure the voltage to ground: There should be about 4 V.	• Faulty audio unit • An open in the wire • A short to ground in the wire
6	RED	Under all conditions	Measure the voltage to ground: There should be about 4 V.	• Faulty audio unit • An open in the wire • A short to ground in the wire

Component Location Index

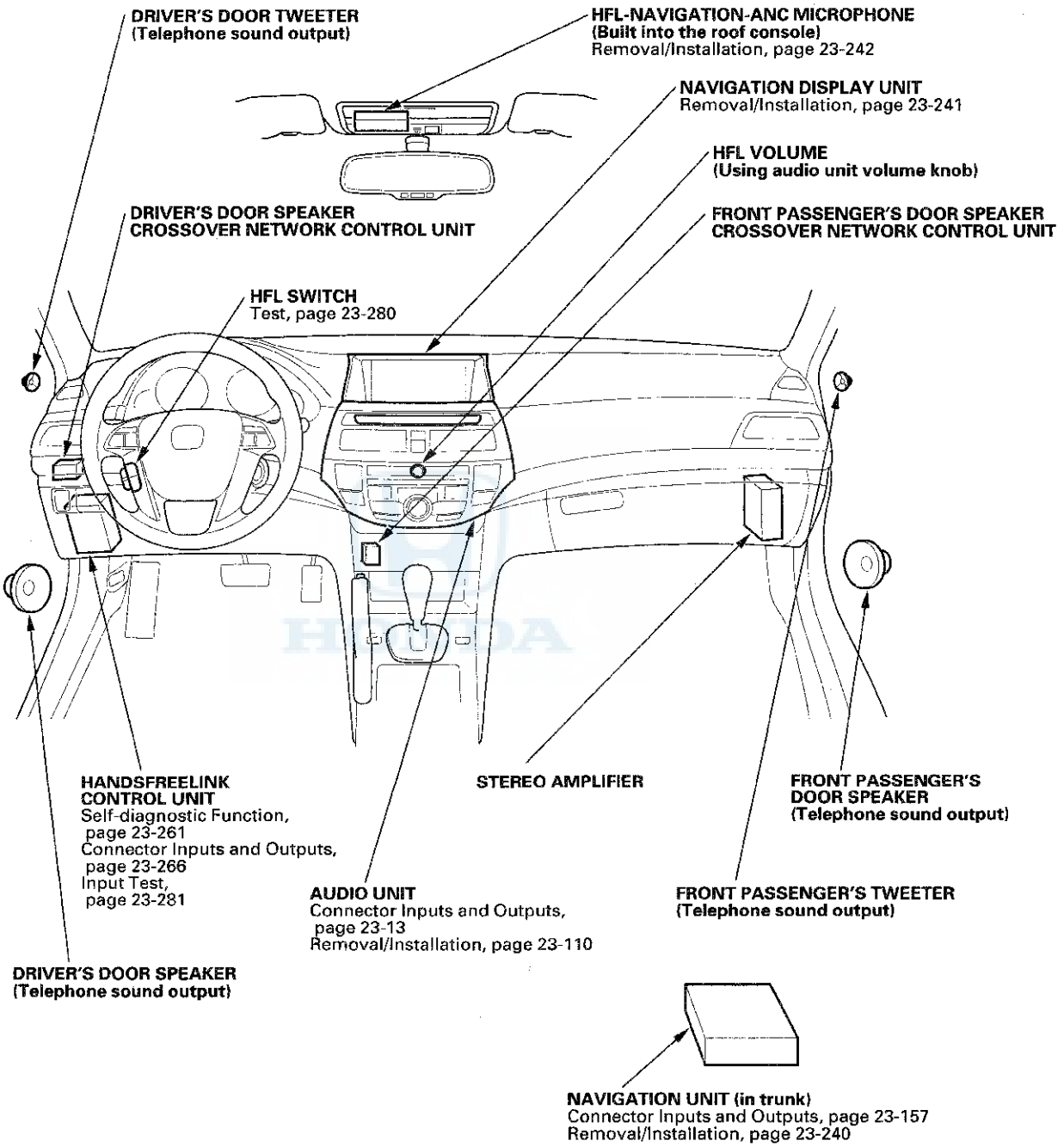

General Troubleshooting Information

How to Check for DTCs with the HDS

NOTE: Check the vehicle battery condition first.

1. Make sure the ignition switch is turned to LOCK (0).
2. Connect the HDS to the data link connector (DLC) (A) located under the driver's side of the dashboard.

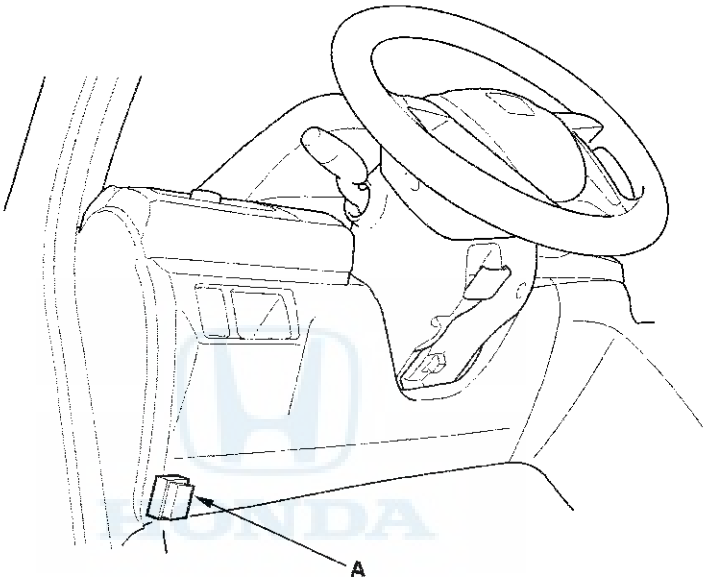

3. Turn the ignition switch to ON (II).
4. Make sure the HDS communicates with the vehicle and the HandsFreeLink control unit. If it doesn't, troubleshoot the DLC circuit (see page 11-192).
5. Select HandsFreeLink in the BODY ELECTRICAL menu.
6. Select DTCs in the HandsFreeLink menu.
7. Check for DTCs. If any DTCs are indicated, write down the DTCs, then go to the indicated DTC troubleshooting. If no DTCs are indicated, refer to symptom troubleshooting.

   NOTE:
   - After troubleshooting, clear the DTCs with the HDS.
   - For specific operations, refer to the HDS user's manual.

(cont'd)

General Troubleshooting Information (cont'd)

Introduction

The HFL system works only with Honda-approved Bluetooth®-enabled cell phones with a hands-free profile. If you are not sure if a particular cell phone is compatible with the HFL system, Honda has a dedicated call center at 888-528-7876 and website handsfreelink.com to answer your questions.

The HFL system allows you to make and receive hands-free calls. It cannot control the phone's performance (call quality and signal strength). For more information about performance and performance problems, refer to Dropped Calls.

Checking Cell Phone Compatibility

The most important step in troubleshooting HFL issues is to identify the model, software version, and wireless carrier of the phone in question. Not all phones with the Bluetooth feature and a hands-free profile are ccompatible with the Honda HFL system.

Go to handsfreelink.com, and check if the customer phone is approved to work with the Honda HFL system.

NOTE:
- The lists of approved, archived, and currently testing phones are constantly changing, so make sure you view them frequently.
- Phones are added as they are approved.
- Phones can be removed from the approved list if a software bug is discovered that makes the phone incompatible. These phones can be added back to the approved list if the phone manufacturer corrects the bug.
- If the software bug is corrected, a new software version is created and may be listed in the Supported Features section of the phone.
- The software versions that are approved are are now being listed in the Software Version field.
- If you cannot access the Honda website, call the HFL call center at 888-528-7876 for further assistance. The call center is open Monday thru Friday from 6:00 a.m. to 6:00 p.m. CT; Saturday from 7:00 a.m. to 6:00 p.m. CT; and Sunday from 8:00 a.m. to 6:00 p.m. CT.

Voice Control Tips and Improving Voice Recognition

To give a voice command to the HFL system, press and release the HFL TALK button. Always wait for the beep, then give your command in a clear, natural voice. The HFL microphone is on the ceiling by the map lights. If the HFL system doesn't recognize your voice command, you'll hear "Pardon." If your command isn't recognized a second time, you'll hear "Please repeat." If your command isn't recognized a third time, the HFL system sends you to its Help menu.

To hear a list of available options at any time, press the HFL TALK button and say "Hands-free help."

This page intentionally left blank.

(cont'd)

General Troubleshooting Information (cont'd)

The HFL system may have problems recognizing some voices. To improve voice recognition:

- Close the windows and the moonroof.
- Set the fan speed to low (1 or 2) or off.
- Adjust the airflow from the center vents down, so that it's not blowing against the microphone on the ceiling.
- Speak in a clear and natural voice. If the system cannot recognize your command, try speaking louder, in a deeper tone.
- If the background noise is too loud, you may need to speak louder.
- If you speak with something in your mouth, or your voice is too high, the system may not interpret your command correctly.
- Find out if the problem is with one person or with everyone who uses the system. If the system has a problem with only one person's voice, this is a system limitation.

Many issues result from the customer not using the system properly. Make sure the customer is using the HFL buttons and not the navigation buttons. When the HFL TALK button is pressed, the customer hears one audible tone. When the HFL BACK button is pressed, the customer hears two audible tones. Make sure to press the HFL BACK button to exit the HFL main menu after completing a call and before giving any navigation commands.

The HFL system may experience a number recognition issue, such as when a customer says a set of numbers in a group unrecognized by the system. The HFL system understands phone numbers in specific blocks of 1, 3, 4, 7, and 10 numbers. For example, the system understands:

1234567890
123-456-7890
1-2-3-4-5-6-7-8-9-0

The system may become confused if numbers are stated in other blocks, as following:

1234-567-890
12-34-56-78-90
12345-67890
123-4567-890

Navigation Through Menus

To skip a voice prompt, press and release the HFL TALK button while the HFL system is speaking. The system beings listening for your next voice command.

To go back a step in a voice command sequence, press and release the HFL BLACK button, or press the HFL TALK button and say "Go back." If you don't say anything while the HFL system is listening for your voice command, it times out and stops voice recognition. The next time you press and release the HFL TALK button, the HFL system begins listening from the point it timed out.

If you've finished or want to stop a voice command sequence at any time, press and release the HFL BACK button, or press and release the HFL TALK button, wait for the beep, and say "Cancel." The next time you press and release the HFL TALK button, the HFL system begins from its main menu. To avoid keeping the audio system muted, press and release the HFL BACK button when you are finished.

NOTE: You can say multiple commands in one sequence, like "Phone setup-pair" after pressing the HFL TALK button.

Pairing a Cell Phone

You must pair an approved Bluetooth-compatible phone to the HFL system before you can make and receive calls. For a current list of approved phones and specific phone pairing instructions for each phone, see Checking Cell Phone Compatibility, go to handsfreelink.com, or call (888) 528-7876.

The following procedure works for most phones. If you cannot pair a phone to the HFL system with this procedure, refer to the phone's operating manual, visit handsfreelink.com, or call (888) 528-7876.

NOTE:
- You cannot pair a phone while the vehicle is moving.
- Your phone must be in Discovery Mode.
- A maximum of six Bluetooth-compatible phones can be paired to the system.

1. With the phone on and the ignition switch in ACCESSORY (I) or ON (II), press and release the HFL TALK button. After the beep, say "Phone setup." The HFL responds, "Phone setup options are status, pair, edit, delete, and list."

2. Press and release the HFL TALK button. After the beep, say "Pair." The HFL responds, "The pairing process requires operation of your mobile phone. For safety, only perform this function while the vehicle is stopped. State a four-digit code for pairing. Note this code. It will be requested by the phone."

3. Press and release the HFL TALK button. After the beep, say the four-digit code you want to use. This can be any four-digit number you want. For example, say "1, 2, 3, 4." The HFL responds, "1, 2, 3, 4. Is this correct?"

4. Press and release the TALK button. After the beep, say "Yes." The HFL responds, "HFL is now searching for a Bluetooth phone. Make sure the phone you are trying to pair is in Discovery mode." If these steps do not work on the phone you are pairing, refer to the phone's operating manual.

5. Follow the prompts on your phone to get it into its Discovery mode. The phone will search for the HFL. When it comes up, select HandsFreeLink from the list of options displayed on your phone.

6. When asked by the phone, enter the four-digit code from step 3 into your phone. The HFL responds, "A new phone has been found. What would you like to name this phone?"

7. Press and release the HFL TALK button. After the beep, say the name you want to use. For example, say "Tom's phone." The HFL responds, "Tom's phone has been successfully paired. Returning to the main menu."

Pairing Troubleshooting

Many pairing issues are resolved by altering the customer's phone settings.

Bluetooth feature settings must be turned on. Phone manufacturers set the default to disable Bluetooth features to conserve battery life. Cell phones may provide procedures to Temporary Power On Bluetooth, or Power On Bluetooth. Turn the Bluetooth feature on, pair the phone to the vehicle, and confirm the phone is linked. Do this by turning the phone off and back on. Make or receive a call to confirm that the cell phone is successfully paired.

When the phone's Bluetooth feature is on, other handsfree accessories such as earpieces or headsets may automatically reconnect to the phone when you turn on the accessory or move it within range of the cell phone. This results in the phone not connecting to the HFL system when the customer enters the vehicle. You must unlink the hands-free accessory from the phone before the HFL system can reconnect.

Some phones have an Auto Answer setting that functions with a headset. This setting must be turned off or the HFL system cannot accept any incoming calls. When this setting is on, it blocks the HFL system from answering the call, and the call goes to voice mail. This can cause the customer to think that the cell phone is not paired properly.

If the HFL system has six phones paired, it will not tell you that it has reached its maximum, and will not allow you to pair a new phone. To check how many phones are paired, press and release the HFL TALK button. After the beep, say "Phone setup list." The HFL system lists every assigned phone name paired with it, then finishes by saying "The entire list has been read. Returning to the main menu." Count the number of phones listed. If there are six, you must delete one phone before adding a new one.

(cont'd)

General Troubleshooting Information (cont'd)

Pairing Checks

For more information about pairing, refer to the cell phone owner's manual, or go to handsfreelink.com.

1. Is the cell phone compatible with the HFL?
2. Is the Bluetooth feature turned on?
3. Is the customer using the HFL buttons, not the navigation buttons, when pairing?
4. Is the cell phone battery fully charged, and is there good signal strength when pairing?
5. Do a soft reset on the cell phone.
6. If the customer is trying to pair a Blackberry® or Palm Treo™ device, make sure the customer uses the shift key when entering the pass code. If the shift key is not pressed, the customer may be entering letters. The HFL does not recognize letters.

Dropped Calls

Customers may perceive dropped calls as being an HFL system fault, but most dropped calls are from cell phone and cell phone carrier issues. The HFL system does not directly handle the cell phone signal. It allows the cell phone to transmit the cell phone audio over the vehicle's audio system.

Before troubleshooting for dropped calls, confirm the cell phone settings:

- Disable Audio Answer. If Auto Answer is enabled, incoming calls are routed to voice mail.
- Disable Always Ask/Trust, Authorize Device, or similar setting, If these settings are enabled, each time the HFL system attempts to link to the phone, the phone will ask if you want to connect. If you do not allow the connection, the HFL will not operate. The phone must be set to Never Ask, Authorize Device, etc. (based on the phone manufacturer and carrier) for permission. Refer to the cell phone owner's manual for more information.
- Disable Flip Open to Answer. If this setting is enabled, the phone must remain open in the vehicle. If it is closed, the incoming calls are routed to voice mail.

Always confirm with the customer if the number of dropped calls is higher while using the HFL system as opposed to using the cell phone only. Customers often confuse problems with their phone or carrier as a problem with the HFL system. The HFL system cannot control or determine:

- Cellular connection quality.
- Signal strength.
- Cellular coverage.
- Ambient weather conditions that affect cellular signals.

When a customer complains about dropped calls, ask questions about when or where the calls are dropped, such as:

- Do you drive the same route on a regular basis?
- Does the call drop in the same location?
- Where do you keep your cell phone?
- Have you compared the number of dropped calls using the HFL versus making calls from the handset?
- Does your phone have an antenna that needs to be extended?

Many reasons for a dropped call are not related to the HFL system. Here are some causes for dropped calls:

- If the quantity of dropped calls is about the same when the customer uses the HFL system versus the handset, the issue is likely due to the cellular phone or carrier.
- If the phone is equipped with a retractable antenna, it needs to be extended to maximize signal strength.
- If a customer also notices that the calls tend to drop in the same areas, the HFL system may be operating normally, but something about the area diminishes cellular coverage to a point where the call drops.
- Hills or mountains can block or interfere with cellular signals.
- High-rise buildings, bridges, or other large structures may block or interfere with cellular signals.
- Placing the cell phone in a purse, in a metal briefcase, under the seat, in the glove box, or in the trunk can all affect signal reception.
- There are coverage gaps in the cellular service. When driving, a call is typically passed from one tower to another. If the customer drives through an area where there is a coverage gap between towers, the call drops.
- Electrical storms, heavy rain, or overcast conditions interfere with signal strength.
- The cell phone battery's state of change can affect signal reception. A low battery may reduce the phone's ability to boost the antenna's power and function properly, especially in low signal strength areas. Some phone manufacturers trade off signal transmission and reception strength for battery life. As the battery weakens, the signal strength may also weaken. Some cell phones may operate more effectively than others in low signal strength areas, especially with a partially charged battery, and depending on whether or not the retractable antenna is fully extended (if applicable). On these models, make sure the antenna is always extended to maximize signal strength and extend battery life.

Phone Will Not Automatically Connect the HFL

If a customer complains that their cell phone is not automatically connecting to the HFL system when they enter the vehicle, do this:

1. Make sure the Bluetooth feature is turned on in the cell phone.
2. Make sure the cell phone is properly painted to the HFL system.
3. Do a soft reset to the cell phone.
4. Check if the phone has an Authorized Connection or Trusted option.
5. Check the battery and signal strength on the cell phone. Pairing a phone requires optimal signal strength and a nearly full battery.

Incoming Calls

If a customer complains that they cannot receive incoming calls through the HFL system, see if the call is routing to the cell phone instead of the HFL system. An easy way to know if the call is routed to the cell phone is when the customer says, "I can't hear the caller, but they can hear me."

1. Make sure the Bluetooth feature is turned on in the cell phone.
2. Make sure the cell phone is paired to the HFL system and linked.
3. Make sure the answer settings in the cell phone are set to multi-key or any-key answer. If the phone is set to flip open to answer, recommend changing the setting to Any Key or leaving the phone flipped open when using the HFL system.
4. Make sure the Auto Answer feature is turned off in the cell phone.
5. Do a soft reset to the phone.
6. Make sure the battery is fully charged and there is adequate signal strength.
7. Ask the customer if they have set specific ring tones or ringer IDs to specific contacts. If they have, recommend using one standard ring tone for all calls.
8. Make sure the customer is pressing the HFL TALK button and not the HFL BACK button or the navigation buttons.

(cont'd)

General Troubleshooting Information (cont'd)

Outgoing Calls

If a customer says that they cannot place a call using the HFL system, ask if the call was initiated through the HFL system or the cell phone itself.

If the call is placed by the HFL system:

1. Make sure the Bluetooth feature is turned on in the cell phone.
2. Make sure the cell phone is paired to the HFL system and linked.
3. Make sure the customer is pressing the HFL TALK button before each command and going through the calling process correctly.
4. Make sure the customer is pressing the HFT TALK button and not the HFL BACK button or the navigation buttons.
5. Check if the cell phone has an Authorized Connections or Trusted option.
6. Do a soft reset to the cell phone.

If the call is placed by the cell phone:

The call will remain on the handset until you transfer it over to the HFL system. To continue the call on the HFL system, you must use the Transfer command by pressing and releasing the HFL TALK button during an active call and saying "Transfer." The customer can now continue the call using the HFL system.

Clearing the HFL System

NOTE:
- This operation clears the HFL system of all passcode(s), any paired phones, and all names in the HFL phonebook.
- Clearing the HFL system is recommend before selling the vehicle.
- If the system is locked and the pass code is lost or forgotten, see the symptom troubleshooting.

1. Press and release the HFL TALK button. After the beep, say "System clear" and the HFL system responds, "This process will clear all paired phone, clear all entries in the phonebook, clear the passcode and restore all defaults in the system setup. Is this what you would like to do?"
2. Press and release the HFL TALK button. After the beep, say "Yes" and the HFL system responds, "Preparing to clear all paired phone, all phonebook entries, the passcode. This may take up to 2 minutes to complete".
3. Press and release the HFL TALK button. After the beep, say "OK" to proceed, or say "Go back" or "Cancel".
4. If you said "OK", after a short period of time, the HFL system responds, "System has been cleared. Returning to the main menu, the Clearing HFL system procedure is now complete".

Self-diagnostic Function

NOTE: This procedure should be used only if HDS is unavailable.

To run the self-diagnostic function, do the following:

1. Turn the ignition switch to ON (II).
2. Press and hold the HFL BACK button for more than 5 seconds.
3. When the HandsFreeLink system enters the self-diagnostic function, the following will occur.
   - If the system has not completed testing for DTCs, the HandsFreeLink system says "The hands free system test is in progress".
   - If there is no DTC, the HandsFreeLink system says "The hands free system is OK".
   - If there is any DTC, the HandsFreeLink system says "The hands free system needs to be serviced".

NOTE:
- The self-diagnostic function can only be initiated while the HFL is in its idle state.
- The self-diagnostic function is considered start once the 5 seconds press and hold is detected, and ends when the units returns to idle state.

Glossary of Terms

Auto Answer

This cell phone setting forces incoming calls to automatically be answered by the handset. Disable this feature on the phone when using the HFL system, as it may interfere with the HFL system answering incoming calls. Set the phone setting to Send Only, Any Key, or Multi-Key answer option.

Answer Options

These cell phone settings allow you to select how you would like to answer an incoming call on the handset. The answer option in the phone can affect inbound calls on the HFL system.

Authorized Connection

This cell phone setting allows the phone to connect automatically with the HFL system without prompting the customer for permission to connect. In some instances, it can affect the ability of the phone to properly route sound to the HFL system.

Bluetooth Power

This cell phone function enables or disables the Bluetooth application. When using a hands-free device such as HFL, the Bluetooth application needs to be enabled.

Discovery Mode

You need to have the cell phone in Discovery Mode to allow other devices with Bluetooth capabilities (such as the HFL system) to find the phone during the pairing process.

Downloaded Ringtones

A customer gets these ringtones from an outside source, such as the internet or a mobile phone store.

(cont'd)

General Troubleshooting Information (cont'd)

HFL Buttons

- HFL BACK button (A): Use this button on the steering wheel to end a call or return to a previous prompt in the HFL menu. Pressing the button twice or holding it down returns you to the HFL main menu.
- HFL TALK button (B): Use this button on the steering wheel to give commands. Press the button before a voice command is given.

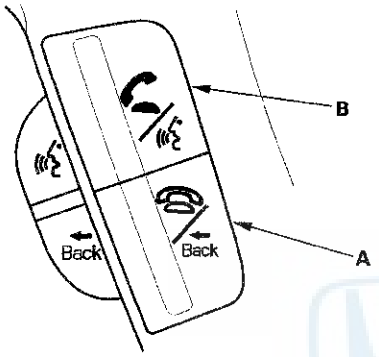

Hard Reset

Hard resets clear the saved settings in the cell phone and restores it to the factory defaults. A hard reset should be done as a last resort (see the cell phone owner's manual for more information).

Linking

This is when your paired phone is actively ready to use the HFL system. You can pair up to six phones to the HFL system, but only one phone can be linked at a time. If two paired phones are in the vehicle, only the phone that is linked can use the HFL system and functions. The second phone must be used as a normal handset.

Pairing

A description for linking two Bluetooth devices together. In this case, you are linking a cell phone with the HFL system. After the pairing process is complete, the devices are able to recognize each other and communicate wirelessly via Bluetooth.

Soft Reset (Cell phone)

This helps to restore the basic functions of the phone. To do a soft reset, turn the phone power off, remove and reinsert the cell phone battery, then turn the phone back on.

Software Version

This refers to the software version loaded in the cell phone. The software version that was tested and determined to be compatible with the HFL system may be listed on the HFL website. Not all software versions are compatible with the HFL system.

Standard Ringtone

These ringtones come factory-installed on the cell phone.

DTC Troubleshooting Index

HandsFreeLink Control Unit

DTC	Description	DTC type	Page
B1775	Microphone input/output short to power/open	Signal error	(see page 23-270)
B1776	Microphone input/output short to ground/open	Signal error	(see page 23-271)
B1779	HFL switch (HFL TALK/HFL BACK buttons) circuit open/ short	Signal error	(see page 23-273)
B1780	HFL switch (HFL TALK/HFL BACK buttons) circuit short	Signal error	(see page 23-275)
B1792	HandsFreeLink control unit internal error	Internal error	(see page 23-276)
U1280	Communication bus line error	Loss of communication	(see page 22-135)

HONDA

Symptom Troubleshooting Index

Symptom	Diagnostic procedure	Also check for
The audio-HVAC subdisplay and HFL digits do not go away after pressing the HFL BACK button	Symptom Troubleshooting (see page 23-276)	Check and repair all CAN related DTCs
The Bluetooth icon in the audio-HVAC subdisplay is grayed-out	There is no HFL-compatible phone paired to the vehicle. Pair an approved HFL-compatible phone to the vehicle	• The phone must be on the list of approved Bluetooth phones and configured correctly. For a current list of approved phones, go to handsfreelink.com, or call 888-528-7876 for further assistance. • Check the Diagnostic Menu and use the Navi System Link
The Honda-approved Bluetooth phone is having problems pairing to the vehicle.	HFL System Troubleshooting (see page 23-267)	The phone must be on the list of approved Bluetooth phones and configured correctly. For a current list of approved phones, go to handsfreelink.com, or call 888-528-7876 for further assistance.
The Honda-approved Bluetooth phone cannot use all its functions.	HFL System Troubleshooting (see page 23-267)	The phone must be on the list of approved Bluetooth phones and configured correctly. For a current list of approved phones, go to handsfreelink.com, or call 888-528-7876 for further assistance.
The Honda-approved Bluetooth phone does not place or receive calls using the HFL system.	HFL System Troubleshooting (see page 23-267)	The phone must be on the list of approved Bluetooth phones and configured correctly. For a current list of approved phones, go to handsfreelink.com, or call 888-528-7876 for further assistance.

Symptom	Diagnostic procedure	Also check for
The customer wants the HFL system reset (all phones and address information cleared from the HFL system)	Clearing the system (see page 23-260)	See the owner's manual for additional information.
The HFL system is locked and the pass code has been lost or forgotten	Symptom Troubleshooting (see page 23-277)	
The HFL system does not recognize all voice prompts	Symptom Troubleshooting (see page 23-277)	Also see Voice control tips (see page 23-255).
The HFL system speaks in French	See the HFL section in the owner's manual for Changing Language	
The address book does not transfer from Bluetooth phone to HFL system	There is no HFL compatible phone paired to the vehicle or the approved phone does not support the function. Pair an approved HFL compatible phone to the vehicle.	The phone must be on the list of approved Bluetooth phones and configured correctly. For a list of approved phones, go to www.handsfreelink.com, or call the HFL support desk at 888-528-7876.
The HFL messages cannot be heard or are weak	Symptom Troubleshooting (see page 23-278)	Excessive interior noise (open windows, vents blowing on microphone, etc.).

HONDA

System Description

HandsFreeLink Control Unit Inputs and Outputs

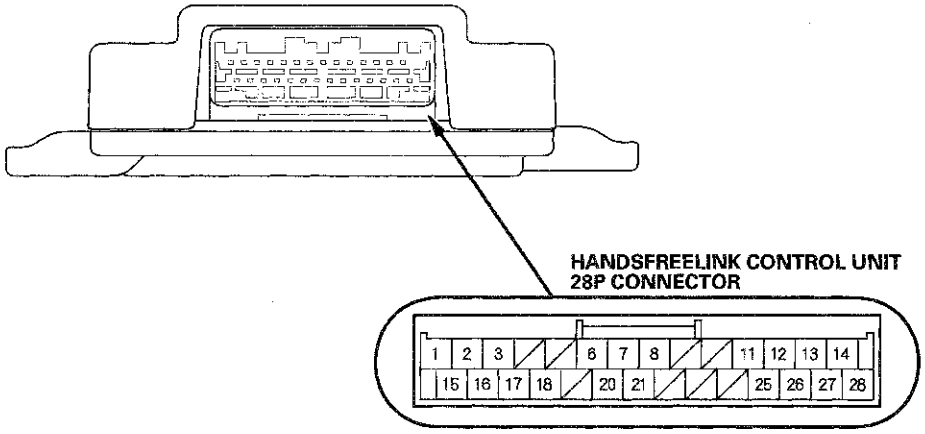

HandsFreeLink Control Unit 28P Connector

Cavity	Wire	Connects to
1	BRN	Ground (G402) (GND)
2	LT BLU	HFL switch (HFL STRG SW)
3	LT GRN	Audio unit, HFL-navigation-ANC microphone (HFL MUTE)
6	WHT	Navigation unit (NAVI COMM4)
7	RED	Navigation unit (NAVI COMM3)
8	GRY*	Navigation unit (NAVI COMM SH)
11	GRN	Audio unit (TELM SIG+)
12	GRY*	Shielding (MIC SIG SH)
13	YEL	HFL-navigation-ANC microphone (MIC+)
14	BRN	HFL-navigation-ANC microphone (MIC−)
15	WHT	Constant power (+B)
16	PUR	ACC (HFL power supply)
17	BLU	B-CAN (B-CAN H)
18	PNK	B-CAN (B-CAN L)
20	BLK	Navigation unit (NAVI COMM1)
21	GRN	Navigation unit (NAVI COMM2)
25	RED	Audio unit (TELM SIG−)
26	GRY*	Audio unit (TELM SIG SH)
27	GRN	Navigation unit (HFL-NAVI MIC+)
28	RED	Navigation unit (HFL-NAVI MIC−)

*: The shielded wires have a heat-shrink tube insulating the outside of the wire. The color of the insulating tube, typically black or dark gray may not match the color of the wire shown on the circuit diagram.

HFL System Troubleshooting

NOTE:
- You must be able to duplicate the customer's concern to successfully diagnose the problem.
- Always use the customer's phone.
- Make sure the phone is approved and configured correctly. Online, go to www.handsfreelink.com, or call the HFL support desk at 888-528-7876.

1. Connect the HDS to the DLC.

2. Turn the ignition switch to ON (II).

3. Check for DTCs.

   Are any DTCs indicated?

   YES—Repair the indicated DTCs and recheck. ■

   NO—Go to step 4.

4. Try to duplicate the problem.

   Can you duplicate the problem?

   YES—Go to step 5.

   NO—The system is OK at this time. ■

5. Pair the phone to a known-good vehicle (same model, year, and trim), and try duplicate the problem.

   Does the phone have the same problem on the known-good vehicle?

   YES—Call the HFL support desk at 888-528-7876 to make sure the phone is configured correctly and has the correct software. If the phone is configured correctly, it is either a characteristic of the HFL system, or a characteristic of the particular approved phone being used. Explain to your customer that this is a system characteristic. Another phone from the approved phone list may give more favorable results. ■

   NO—Substitute a known-good HandsFreeLink control unit and recheck. If the problem goes away, replace the original HandsFreeLink control unit. ■

Circuit Diagram

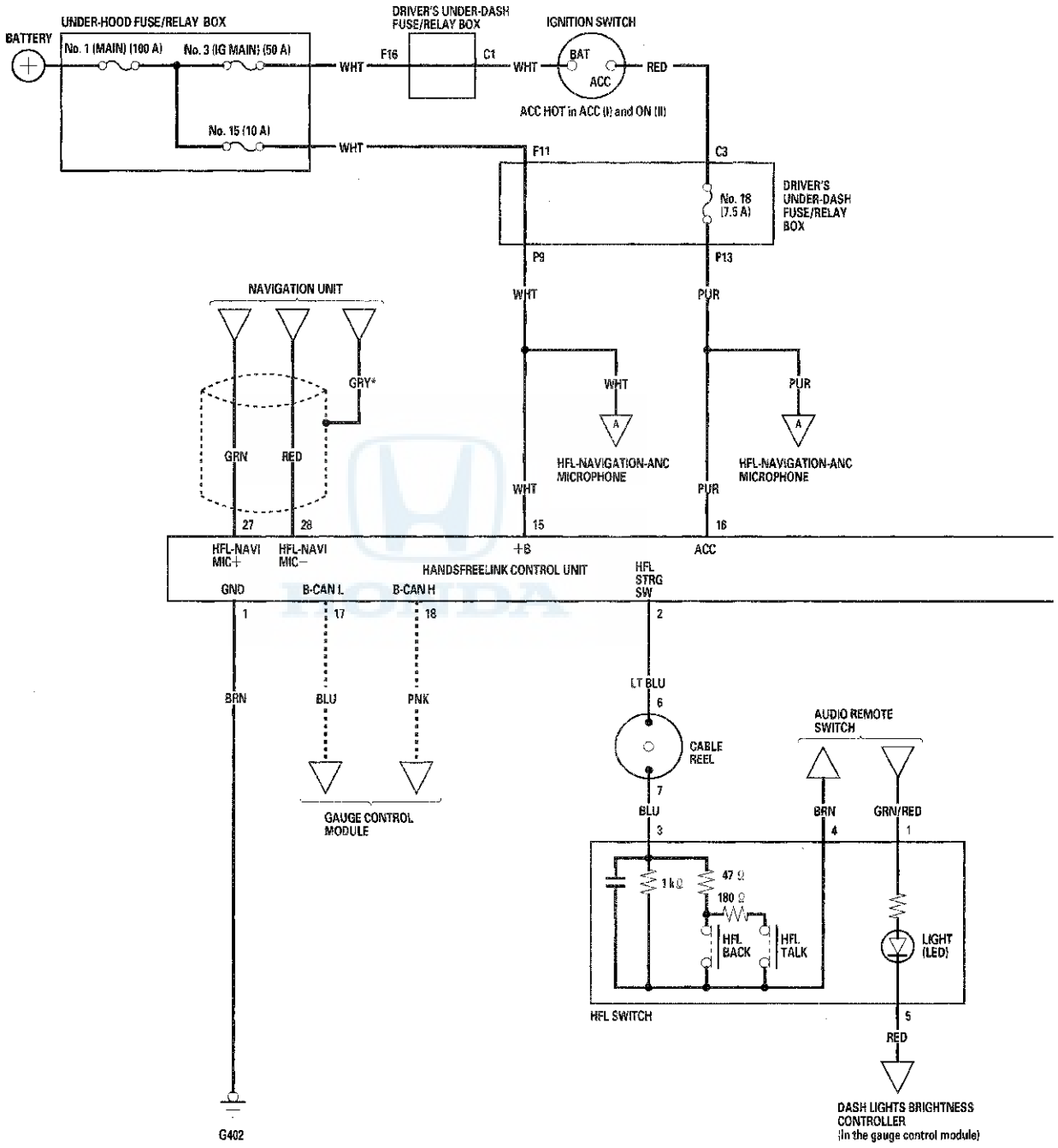

*: The shielded wires have a heat-shrunk tube insulating the outside of the wire. The color of the insulating tube, typically black or dark gray, may not match the color of the wire shown on the circuit diagram.

: CAN line

: Shielding

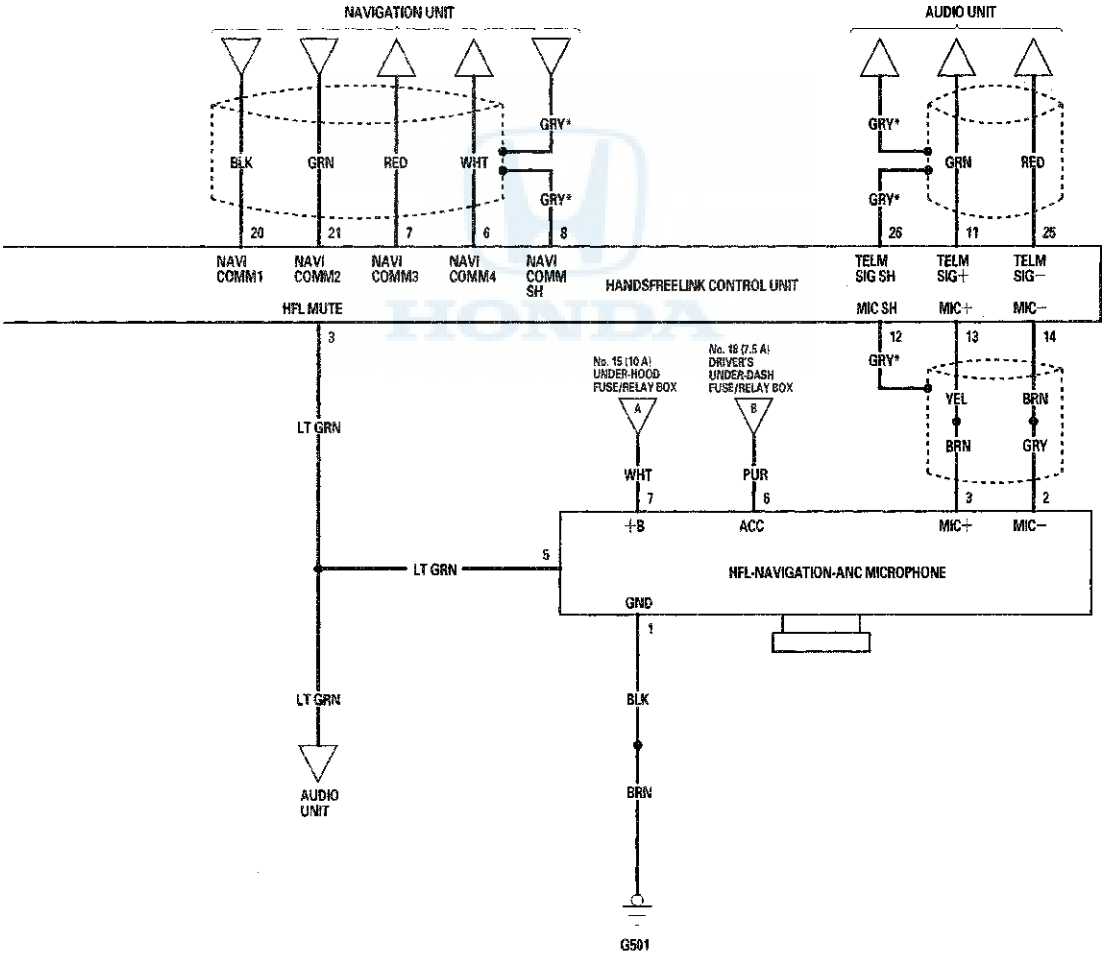

DTC Troubleshooting

DTC B1775: Microphone Input/Output Short to Power/Open

NOTE: If you are troubleshooting multiple DTCs, be sure to follow the instructions in B-CAN system diagnosis test mode A (see page 22-120).

1. Connect the HDS to the DLC.
2. Clear the DTCs with the HDS.
3. Turn the ignition switch to LOCK (0), and then back to ON (II).
4. Check for DTCs with the HDS.

   Is DTC B1775 indicated?

   YES—Go to step 5.

   NO—Intermittent failure, the system is OK at this time.■

5. Turn the ignition switch to LOCK (0).
6. Disconnect the HFL-navigation-ANC microphone 7P connector.
7. Disconnect the HandsFreeLink control unit 28P connector.
8. Turn the ignition switch to ON (II).
9. Measure the voltage between HandsFreeLink control unit 28P connector terminal No. 13 and body ground.

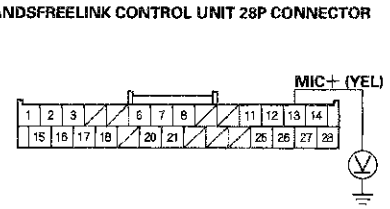

   Is there voltage?

   YES—Short to power in the wire the HandsFreeLink control unit and the HFL-navigation-ANC microphone. Replace the affected shielded harness.■

   NO—Go to step 10.

10. Turn the ignition switch to LOCK (0).
11. Check for continuity between HandsFreeLink control unit 28P connector terminal No. 13 and HFL-navigation-ANC microphone 7P connector terminal No. 3.

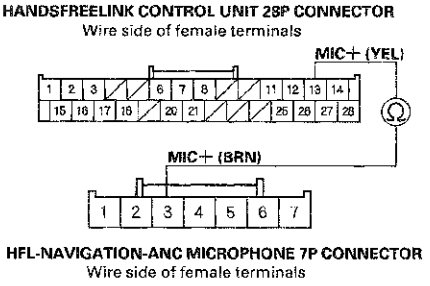

   Is there continuity?

   YES—Substitute a known-good HandsFreeLink control unit, then recheck. If the symptom goes away, replace the original HandsFreeLink control unit (see page 23-281). If the symptom still present, replace the HFL-navigation-ANC microphone (see page 23-242).■

   NO—Open in the wire between the HandsFreeLink control unit and the HFL-navigation-ANC microphone. Replace the affected shielded harness.■

DTC B1776: Microphone Input/Output Short to Ground/Open

NOTE: If you are troubleshooting multiple DTCs, be sure to follow the instructions in B-CAN system diagnosis test mode A (see page 22-120).

1. Connect the HDS to the DLC.
2. Clear the DTCs with the HDS.
3. Turn the ignition switch to LOCK (0), and then back to ON (II).
4. Check for DTCs with the HDS.

   Is DTC B1776 indicated?

   YES—Go to step 5.

   NO—Intermittent failure, the system is OK at this time.■

5. Turn the ignition switch to LOCK (0).
6. Disconnect the HFL-navigation-ANC microphone 7P connector.
7. Disconnect the HandsFreeLink control unit 28P connector.
8. Check for continuity between body ground and the HandsFreeLink control unit 28P connector terminals No. 13 and No. 14 individually, then between terminals No. 12 and No. 13.

HANDSFREELINK CONTROL UNIT 28P CONNECTOR

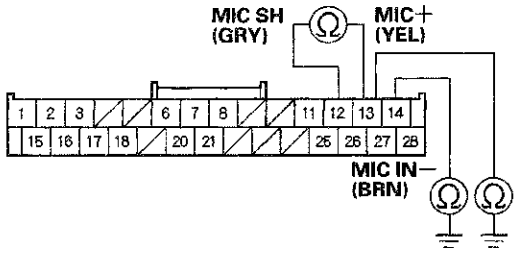

Wire side of female terminals

Is there continuity?

YES—Short in the wire(s) between the HandsFreeLink control unit and the HFL-navigation-ANC microphone. Replace the affected shielded harness.■

NO—Go to step 9.

(cont'd)

DTC Troubleshooting (cont'd)

9. Check for continuity between the terminals shown of the HandsFreeLink control unit 28P connector and the HFL-navigation-ANC microphone 7P connector.

HANDSFREELINK CONTROL UNIT 28P CONNECTOR
Wire side of female terminals

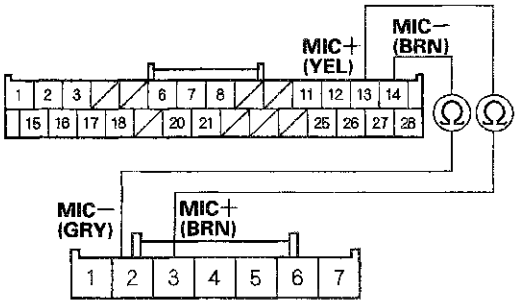

HFL-NAVIGATION-ANC MICROPHONE 7P CONNECTOR
Wire side of female terminals

Is there continuity?

YES—Go to step 10.

NO—Open in the wire(s) between the HandsFreeLink control unit and the HFL-navigation-ANC microphone. Replace the affected shielded harness. ■

10. Disconnect navigation unit connector C (16P).

11. Check for continuity between HandsFreeLink control unit 28P connector terminals No. 27 and No. 28 and body ground.

HANDSFREELINK CONTROL UNIT 28P CONNECTOR

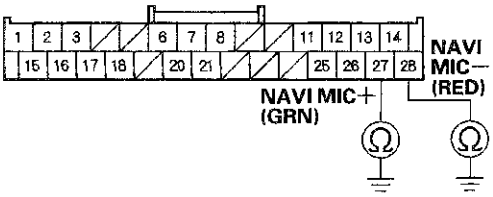

Wire side of female terminals

Is there continuity?

YES—Short to body ground in the wire(s) between the HandsFreeLink control unit and the navigation unit. Replace the affected shielded harness. ■

NO—Go to step 12.

12. Check for continuity between the terminals shown of the HandsFreeLink control unit 28P connector and navigation unit connector C (16P).

HANDSFREELINK CONTROL UNIT 28P CONNECTOR
Wire side of female terminals

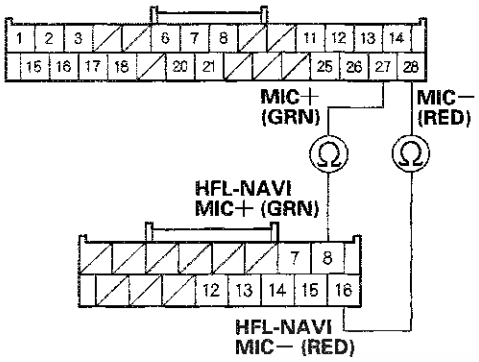

NAVIGATION UNIT CONNECTOR C (16P)
Wire side of female terminals

Is there continuity?

YES—Substitute a known-good HandsFreeLink control unit, then recheck. If the symptom goes away, replace the original HandsFreeLink control unit. If the symptom does not go away, replace the navigation unit (see page 23-240). ■

NO—Open in the wire(s) between the HandsFreeLink control unit and the navigation unit. Replace the affected shielded harness. ■

DTC B1779: HFL Switch or Voice Control Switch (HFL TALK/HFL BACK Buttons) Circuit Open/Short

NOTE: If you are troubleshooting multiple DTCs, be sure to follow the instructions in B-CAN system diagnosis test mode A (see page 22-120).

1. Connect the HDS to the DLC.
2. Clear the DTCs with the HDS.
3. Turn the ignition switch to LOCK (0), then start the vehicle, and turn the steering wheel back and forth several times.
4. Check for DTCs with the HDS.

   Is DTC B1779 indicated?

   YES—Go to step 5.

   NO—Intermittent failure, the system is OK at this time. ■

5. Turn the ignition switch to LOCK (0).
6. Do the HFL switch test (see page 23-280).

   Is the switch OK?

   YES—Go to step 7.

   NO—Replace the HFL-voice control switch (see page 17-25). ■

7. Remove the driver's dashboard lower cover (see page 20-153).
8. Disconnect HandsFreeLink control unit 28P connector.
9. Disconnect HFL-voice control switch 5P connector.
10. Turn the ignition switch to ON (II).

(cont'd)

DTC Troubleshooting (cont'd)

11. Measure the voltage between the HFL-voice control switch 5P connector terminal No. 3 and body ground.

HFL-VOICE CONTROL SWITCH 5P CONNECTOR

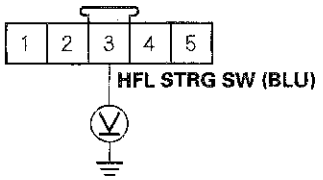

Wire side of female terminals

Is there voltage?

YES—Repair short to power on the BLU wire. ■

NO—Go to step 12.

12. Check for continuity between HandsFreeLink control unit 28P connector terminal No. 2 and HFL-voice control switch 5P connector terminal No. 3.

HANDSFREELINK CONTROL UNIT 28P CONNECTOR
Wire side of female terminals

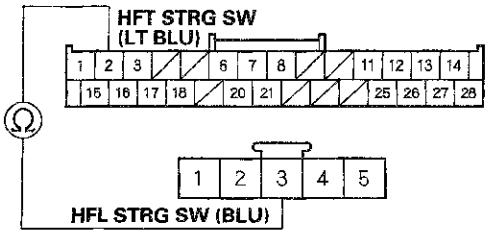

HFL-VOICE CONTROL SWITCH 5P CONNECTOR
Wire side of female terminals

Is there continuity?

YES—Go to step 13.

NO—Repair open in the BLU wire between the switch, the cable reel, and the HandsFreeLink control unit. ■

13. Turn the ignition switch to ON (II).

14. Measure the voltage between HandsFreeLink control unit 28P connector terminal No. 2 and body ground.

HANDSFREELINK CONTROL UNIT 28P CONNECTOR

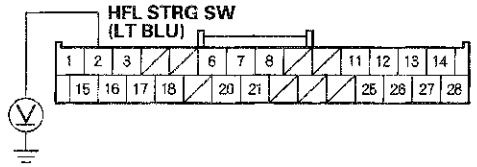

Wire side of female terminals

Is there voltage?

YES—Repair short to body ground in the wire between the HandsFreeLink control unit and the HFL-voice control switch. ■

NO—Go to step 15.

15. Turn the ignition switch to LOCK (0).

16. Check for continuity between HFL-voice control switch 5P connector terminal No. 4 and body ground.

HFL-VOICE CONTROL SWITCH 5P CONNECTOR

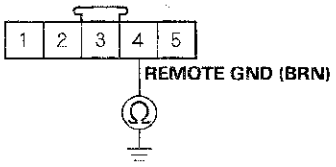

Wire side of female terminals

Is there continuity?

YES—Replace the HandsFreeLink control unit (see page 23-281). ■

NO—Repair open in the wire between the HFL-voice control switch, cable reel, and the audio unit. ■

DTC B1780: HFL Switch (HFL TALK/HFL BACK Buttons) Circuit Short

NOTE: If you are troubleshooting multiple DTCs, be sure to follow the instructions in B-CAN system diagnosis test mode A (see page 22-120).

1. Connect the HDS to the DLC.
2. Clear the DTCs with the HDS.
3. Turn the ignition switch to LOCK (0), then start the vehicle, and turn the steering wheel back and forth several times.
4. Check for DTCs with the HDS.

   Is DTC B1780 indicated?

   YES—Go to step 5.

   NO—Intermittent failure, the system is OK at this time. ■

5. Turn the ignition switch to LOCK (0).
6. Do the HFL switch test (see page 23-280).

   Is the switch OK?

   YES—Go to step 7.

   NO—Replace the cable reel subharness (see page 17-25). ■

7. Turn the ignition switch to LOCK (0).
8. Disconnect the HandsFreeLink control unit 28P connector.
9. Disconnect the HFL-voice control switch 5P connector.
10. Check for continuity between HandsFreeLink control unit 28P connector terminal No. 2 and body ground.

HANDSFREELINK CONTROL UNIT 28P CONNECTOR

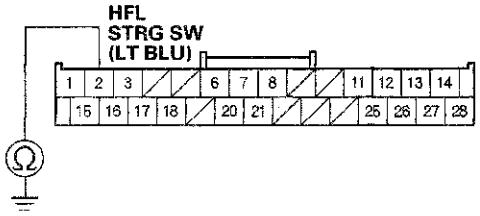

Wire side of female terminals

Is there continuity?

YES—Repair short in the wire. ■

NO—Replace the HandsFreeLink control unit (see page 23-281). ■

DTC Troubleshooting (cont'd)

DTC B1792: HandsFreeLink Control Unit Internal Error

1. Connect the HDS to the DLC.
2. Clear the DTCs with the HDS.
3. Turn the ignition switch to LOCK (0), and then back to ON (II).
4. Check for DTCs with the HDS.

   Is DTC B1792 indicated?

   YES—Replace the HandsFreeLink control unit (see page 23-281). ■

   NO—Intermittent failure, the system is OK at this time. ■

Symptom Troubleshooting

The audio-HVAC subdisplay and HFL digits do not go away after pressing the HFL BACK button

1. Connect the HDS to the DLC.
2. Clear the DTCs with the HDS.
3. Turn the ignition switch to LOCK (0), and then back to ON (II).
4. Check for DTCs.

   Are there any DTCs indicated?

   YES—Repair the indicated DTCs. ■

   NO—Go to step 5.

5. Turn the ignition to LOCK (0).
6. Substitute a known-good HandsFreeLink control unit, then turn the ignition switch to ON (II), and recheck the audio-HVAC subdisplay.

   Are the messages cleared?

   YES—Replace the original HandsFreeLink control unit (see page 23-281). ■

   NO—Replace the gauge control module (see page 22-324). ■

The HFL system does not recognize all voice prompts

1. Connect the HDS to the DLC.

2. Clear the DTCs with the HDS.

3. Turn the ignition switch to LOCK (0), and then back to ON (II).

4. Check for DTCs.

   Are there any DTCs indicated?

   YES—Repair the indicated DTCs.■

   NO—Go to step 5.

5. Check if the problem is duplicated.

   Can the customer's problem be duplicated?

   YES—Go to step 6.

   NO—The system is OK at this time. Ask the customer to demonstrate the problem.■

6. Check if the navigation system can recognize voice prompts.

   Can the voice prompts be recognized?

   YES—Go to step 7.

   NO—Refer to the navigation system troubleshooting (see page 23-227).■

7. Pair the customer's phone to a known-good vehicle, and try to duplicate the problem.

   Can you duplicate the problem?

   YES—Call the HFL support desk at 888-528-7876, and inquire if there are any known issues for the problem. If there are no known issues, explain to the customer's this is a system characteristic and cannot be improved at this time.■

   NO—Substitute a known-good HFL-navigation-ANC microphone. If the problems still present, substitute a known-good HandsFreeLink control unit. If the problem goes away, replace the original HFL-navigation-ANC microphone (see page 23-242). ■

The HFL system is locked and the pass code has been lost or forgotten

1. Connect the HDS to the DLC.

2. Turn the ignition switch to ON (II).

3. From the Body Electrical menu, select HandsFreeLink.

4. Select Miscellaneous Tests, then select Pass code reset.

5. Follow the HDS prompts to reset the pass code.

HONDA

Symptom Troubleshooting (cont'd)

The HFL messages cannot be heard or are weak

1. Turn the ignition switch to ON (II).

2. Check that the audio system is operating normally and the speaker sound levels from different audio sources (AM/FM, XM, CD, navigation, etc.).

   Does the audio system work normally and is the audio output from the speaker normal when playing various audio sources?

   YES—Go to step 3.

   NO—Refer to the audio system symptom troubleshooting. ■

3. Press the HFL talk button.

   Does the audio system mute when HFL messages are being played?

   YES—Go to step 4.

   NO—Go to step 9.

4. Turn the ignition switch to LOCK (0).

5. Disconnect audio unit connector B (20P) and the HandsFreeLink control unit 28P connector.

6. Check for continuity between HandsFreeLink control unit 28P connector terminals No. 11 and No. 25 and audio unit connector B (20P) terminals No. 19 and No. 9 respectively.

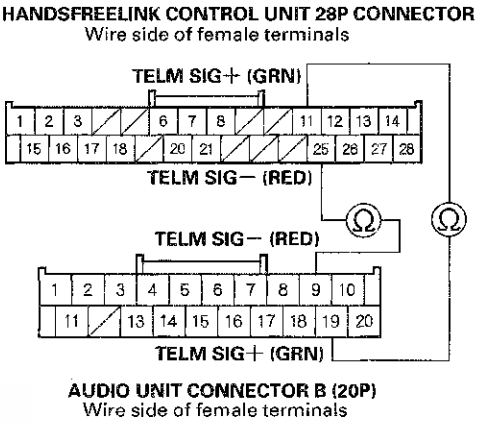

   Is there continuity?

   YES—Go to step 7.

   NO—Open in the wire(s) between the HandsFreeLink control unit and the audio unit. Replace the affected harness. ■

7. Check for continuity between body ground and audio unit connector B (20P) terminals No. 19 and No. 9 individually.

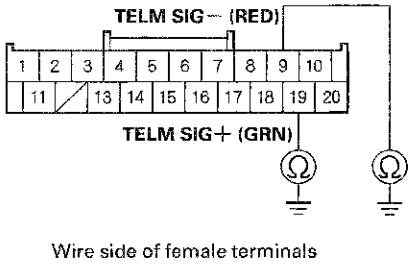

   Is there continuity?

   YES—Short to body ground in the wire(s) between the HandsFreeLink control unit and the audio unit. Replace the affected shielded harness. ■

   NO—Go to step 8.

8. Check for continuity between the terminals of audio unit connector B (20P) according to the table.

From terminal	To terminal
B19	B9, B10
B9	B10

AUDIO UNIT CONNECTOR B (20P)

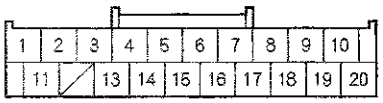

Wire side of female terminals

Is there continuity?

YES—Short in the wire(s) between the HandsFreeLink control unit and the audio unit. Replace the appropriate harness.■

NO—Substitute a known-good HandsFreeLink control unit and recheck. If the symptom goes away, replace the original HandsFreeLink control unit. If the symptom does not go away, replace the audio unit (see page 23-110).■

9. Press the HFL talk button.

Does the audio-HVAC subdisplay the HFL menu and the subdisplay show HandsFreeLink when pressing the HFL talk button?

YES—Go to step 10.

NO—Go to step 14.

10. Turn the ignition switch to LOCK (0).

11. Disconnect the HandsFreeLink control unit 28P connector and audio unit connector B (20P).

12. Check for continuity between HandsFreeLink control unit 28P connector terminal No. 3 and audio unit connector B (20P) terminal No. 20.

HANDSFREELINK CONTROL UNIT 28P CONNECTOR
Wire side of female terminals

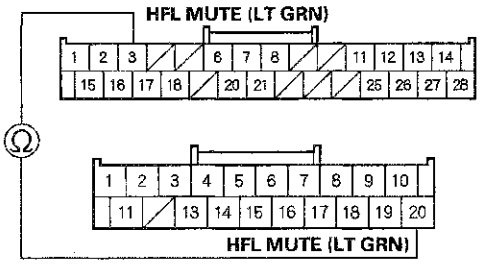

AUDIO UNIT CONNECTOR B (20P)
Wire side of female terminals

Is there continuity?

YES—Go to step 12.

NO—Repair open in the wire between the HandsFreeLink control unit and the audio unit.■

13. Check for continuity between body ground and HandsFreeLink control unit 28P connector terminal No. 3.

HANDSFREELINK CONTROL UNIT 28P CONNECTOR

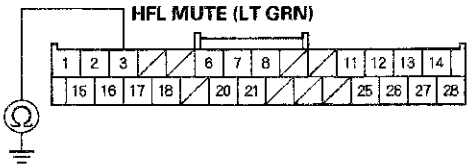

Wire side of female terminals

Is there continuity?

YES—Repair short to body ground in the wire between the HandsFreeLink control unit and the audio unit.■

NO—Substitute a known-good HandsFreeLink control unit and recheck. If symptom goes away, replace the original HandsFreeLink control unit. If the symptom does not go away, replace the audio unit (see page 23-110).■

(cont'd)

Symptom Troubleshooting (cont'd)

14. Turn the ignition switch to LOCK (0).

15. Disconnect the HandsFreeLink control unit 28P connector and the HFL-voice control switch 5P connector.

16. Check for continuity between HandsFreeLink control unit 28P connector terminal No. 2 and HFL-voice control switch 5P connector terminal No. 3.

HANDSFREELINK CONTROL UNIT 28P CONNECTOR
Wire side of female terminals

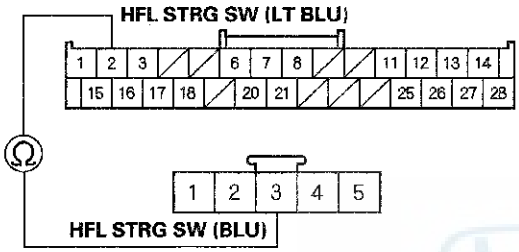

HFL-VOICE CONTROL SWITCH 5P CONNECTOR
Wire side of female terminals

Is there continuity?

YES—Do the HFL Switch Test (see page 23-280). ■

NO—Repair open in the wire between the HandsFreeLink control unit and the HFL-voice control switch. ■

HFL Switch Test

1. Remove the driver's airbag (see page 24-205).

2. Remove the steering wheel (see page 17-24).

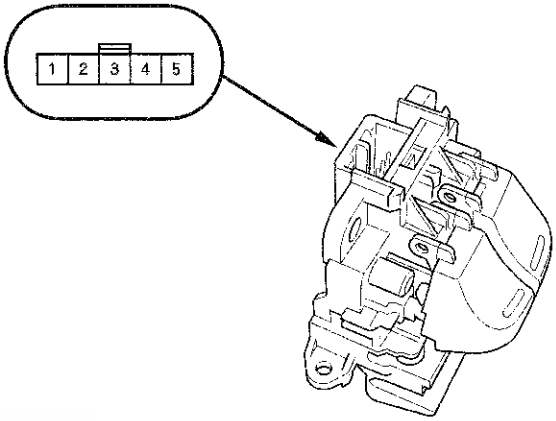

3. Measure the resistance between terminals No. 3 and No. 4 in each switch position according to the table.

HFL-Voice Control Switch

Position	Resistance
No buttons pressed	About 1 kΩ
HFL TALK button pressed	About 185 Ω
HFL BACK button pressed	About 47 Ω

4. If the resistance is not as specified, replace the switch (see page 17-25).

Control Unit Input Test/Replacement

1. Remove the driver's dashboard lower cover (see page 20-153).

2. Remove the HandsFreeLink control unit screws, then disconnect the 28P connector (A) from the HandsFreeLink control unit (B).

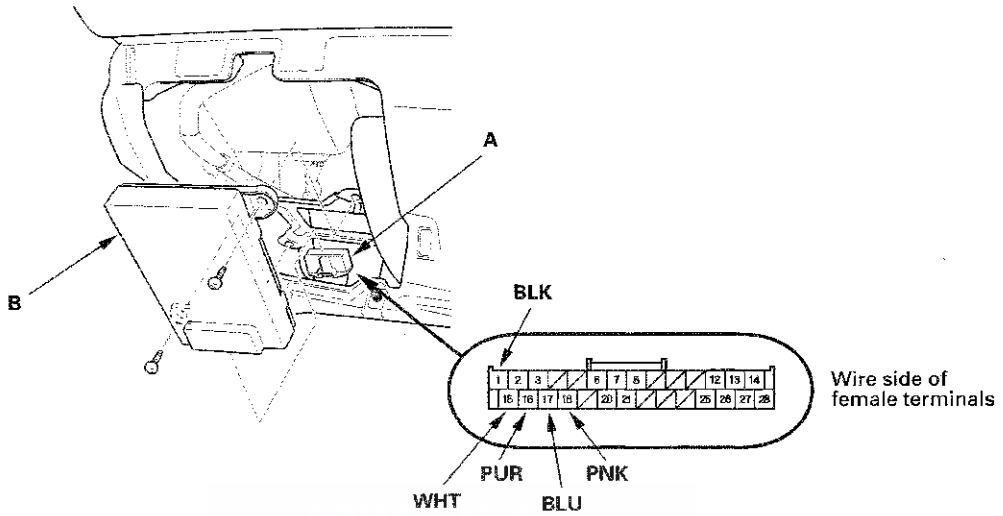

3. Inspect the connector and socket terminals for a good pinfit to be sure they are all making good contact.

   - If the terminals are bent, loose or corroded, repair them as necessary, and recheck the system.
   - If the terminals look OK, go to step 4.

4. Reconnect the connector, and make these input tests at the connector.

   - If any test indicates a problem, find and correct the cause, then recheck the system.
   - If all the input tests prove OK, go to step 5.

Cavity	Wire	Test condition	Test: Desired result	Possible cause if result is not obtained
1	BLK	Under all conditions	Measure the voltage to body ground: There should be less than 0.5 V.	• Poor ground (G401) • An open in the wire
15	WHT	Under all conditions	Measure the voltage to body ground: There should be battery voltage.	• Blown No. 15 (10 A) fuse in the under-hood fuse/relay box • An open in the wire
16	PUR	Ignition switch in ACCESSORY (I) or ON (II)	Measure the voltage to body ground: There should be battery voltage.	• Blown No. 18 (7.5 A) fuse in the driver's under-dash fuse/relay box • An open in the wire

5. Disconnect the 28P connector again, and make this input test at the connector.

   - If the test indicates a problem, find and correct the cause, then recheck the system.
   - If the input test proves OK, the HandsFreeLink control unit is faulty, replace it.

Cavity	Wire	Test condition	Test: Desired result	Possible cause if result is not obtained
17	BLU	Under all conditions	Check for continuity between terminal No. 17 and the passenger's under-dash fuse/relay box connector A (38P) terminal No. 29: There should be continuity.	An open in the wire
		Passenger's under-dash fuse/relay box connector A (38P) disconnected	Check for continuity to body ground: There should be no continuity.	Short to body ground
18	PNK	Under all conditions	Check for continuity between terminal No. 18 and the passenger's under-dash fuse/relay box connector A (38P) terminal No. 11: There should be continuity.	An open in the wire
		Passenger's under-dash fuse/relay box connector A (38P) disconnected	Check for continuity to body ground: There should be no continuity.	Short to body ground

HONDA

Navigation Tools: Click on the "Table of Contents" below, or use the Bookmarks to the left.

Restraints

Restraints
Special Tools 24-2

Seat Belts
Component Location Index 24-3
Front Seat Belt Replacement 24-5
Rear Seat Belt Replacement 24-14
Inspection 24-17

SRS (Supplemental Restraint System)
Component Location Index 24-19
Precautions and Procedures 24-23
General Troubleshooting Information 24-34
SRS Unit Update 24-37
ODS Unit Initialization 24-38
ODS Unit Calibration 24-38
ODS Unit Operation Check 24-39
Driver's Seat Position Sensor Operation Check 24-40
DTC Troubleshooting Index 24-41
Symptom Troubleshooting Index 24-47
System Description 24-48
Circuit Diagram 24-55
DTC Troubleshooting 24-61
Symptom Troubleshooting 24-198
Component Replacement/Inspection After Deployment 24-202
Driver's Airbag Replacement 24-205
Front Passenger's Airbag Replacement 24-206
Side Airbag Replacement 24-208
Side Curtain Airbag Replacement 24-209
Airbag and Tensioner Disposal 24-215
Cable Reel Replacement 24-218
SRS Unit Replacement 24-221
Side Impact Sensor (First) Replacement 24-223
Side Impact Sensor (Second) Replacement 24-225
Rear Safing Sensor Replacement 24-227
Front Passenger's Weight Sensor Replacement 24-228
ODS Unit Replacement 24-230
Front Impact Sensor Replacement 24-231
Driver's Seat Position Sensor Replacement 24-232
Passenger's Airbag Cutoff Indicator Replacement ... 24-234

Special Tools

Ref. No.	Tool Number	Description	Qty
①	07HAZ-SG00500	Deployment Tool	1
②	07SAZ-TB4011A	SRS Inflator Simulator	1
③	070AZ-SNAA100	SRS Simulator Lead J	1
④	07TAZ-001020A	Back Probe Adapter, 17 mm	2
⑤	070AZ-SNAA200	SRS Simulator Lead K	1
⑥	070AZ-SNAA300	SRS Simulator Lead L	1
⑦	070AZ-SAA0100	SRS Short Canceller	2

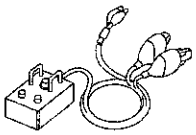

①

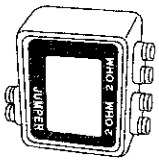

②

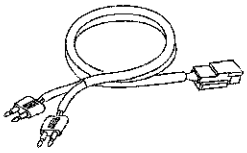

③

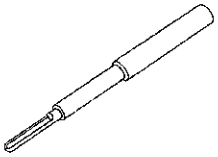

④

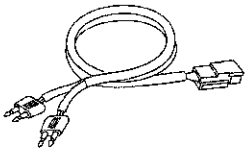

⑤

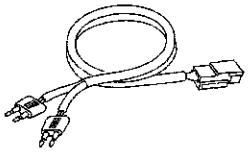

⑥

⑦

HONDA

Component Location Index

2-door

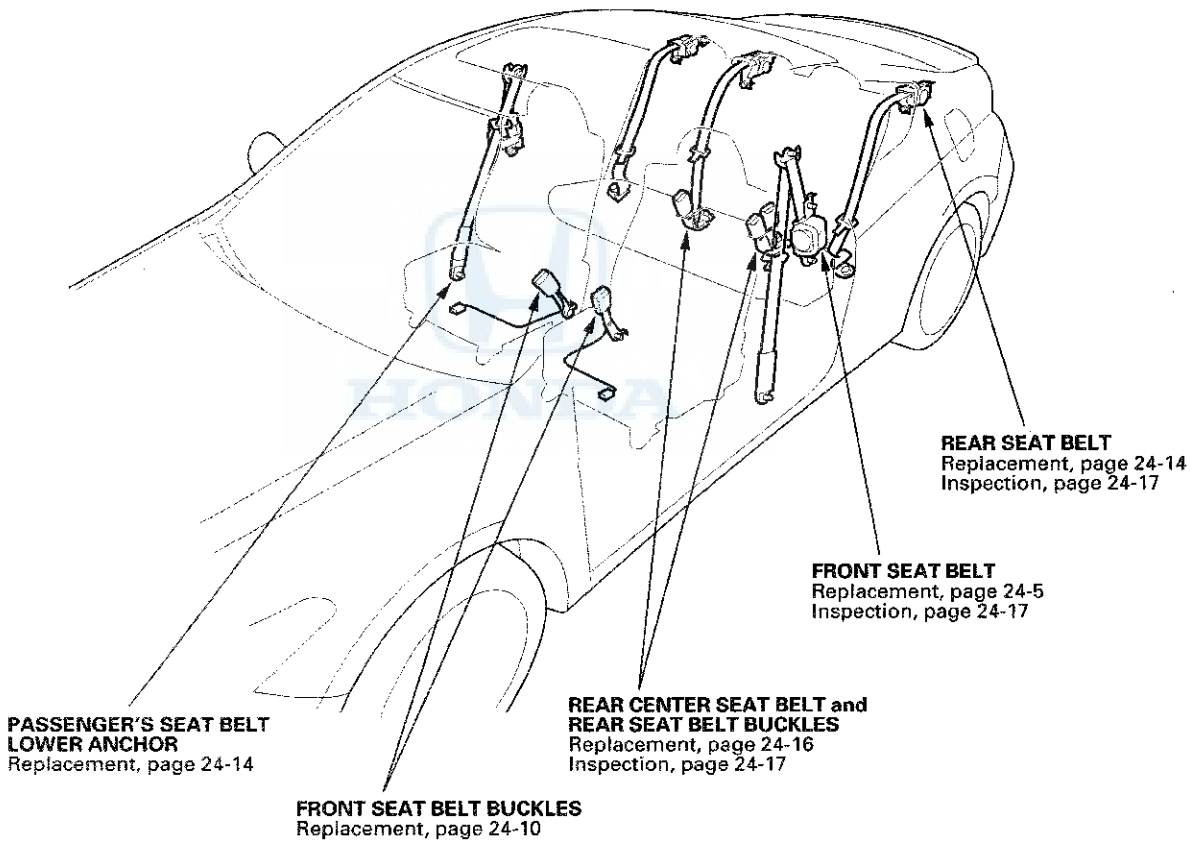

Component Location Index (cont'd)

4-door

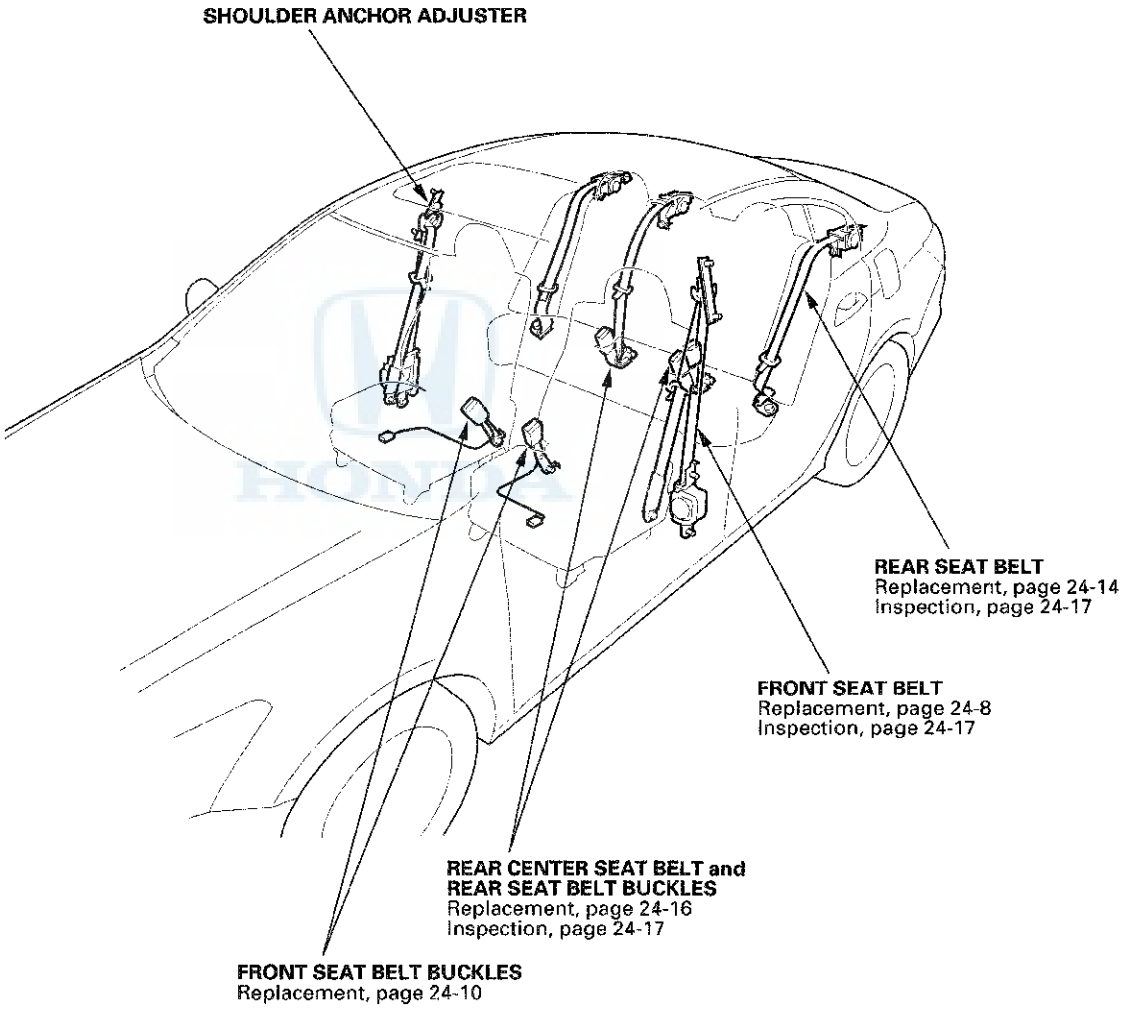

Front Seat Belt Replacement

Front Seat Belt - 2-door

SRS components are located in this area. Review the SRS component locations (see page 24-21) and the precautions and procedures (see page 24-23) before doing repairs or service.

NOTE: Check the front seat belts for damage (see page 24-17), and replace them if necessary.

1. Slide the front seat forward fully.

2. Remove the seat belt lower anchor.

   - Driver's seat belt: Remove the lower anchor cap (A), and remove the lower anchor bolt (B).
   - Passenger's seat belt: Carefully insert the tip of a small screwdriver (C) through the hole in the back of the front seat belt lower anchor cover (D), and into the hole in the front seat belt lower anchor (E). Unlock the lower anchor by pushing in on the screwdriver. Remove the screwdriver, and then detach the front seat belt anchor plate (F) and the anchor cover from the lower anchor.

Driver's seat belt

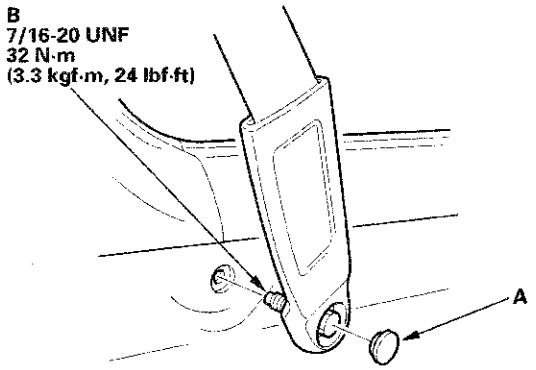

Passenger's seat belt

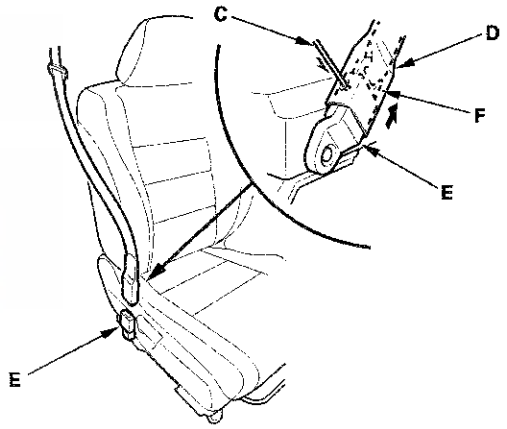

3. Do the battery terminal disconnection procedure (see page 22-89), then wait at least 3 minutes before beginning work.

4. Remove these items:

   - Door sill trim (see page 20-97)
   - Rear side trim panel (see page 20-118)

(cont'd)

Front Seat Belt Replacement (cont'd)

5. Remove the bolts (A), then remove the seat belt guide (B).

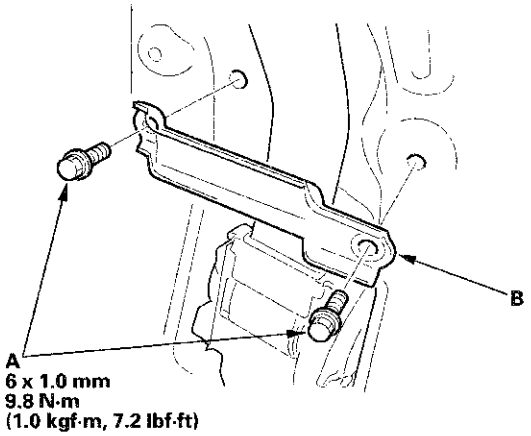

6. Remove the upper anchor bolt (A).

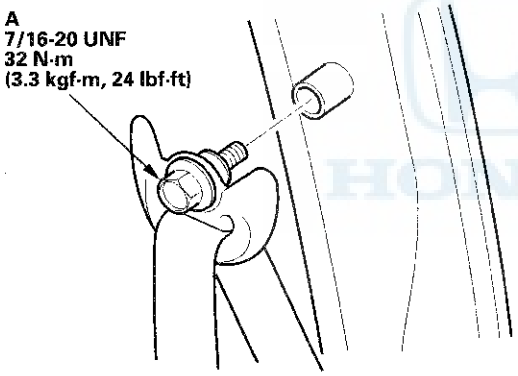

7. Disconnect the seat belt tensioner connector (A). Remove the upper retractor mounting bolt (B) and the lower retractor bolt (C), then remove the front seat belt (D) and retractor (E).

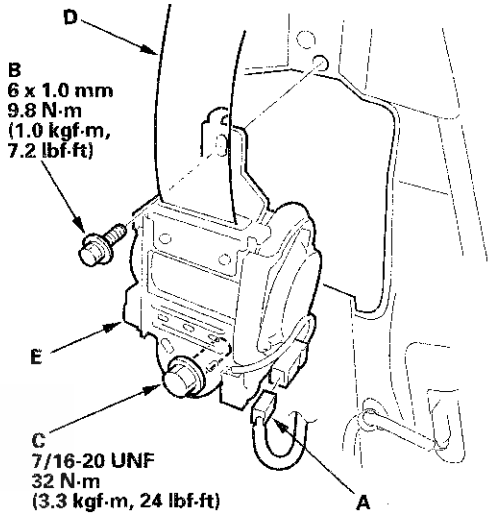

8. Install the belt in the reverse order of removal, and note these items:

   - Apply medium strength liquid thread lock to the anchor bolts before reinstallation.
   - Tighten the bolts by hand first, then tighten to the specified torque.
   - Check that the retractor locking mechanism functions (see page 24-17).
   - Assemble the washers, the collars, and the bushings on the upper and the lower anchor bolts as shown.
   - Before installing the anchor bolts, make sure there are no twists or kinks in the seat belt.
   - Make sure the seat belt tensioner connector is

   - Passenger's seat belt: Triangle marks (A) on the anchor plate (B) and on the lower anchor (C) must face the same side.
   - Passenger's seat belt: Insert the hook on the anchor plate into the lower anchor, and be sure that the lower anchor is locked securely.
   - Do the battery terminal reconnection procedure (see page 22-89).
   - Check for any DTCs that may have been set during repairs, and clear them.

Upper anchor bolt installation

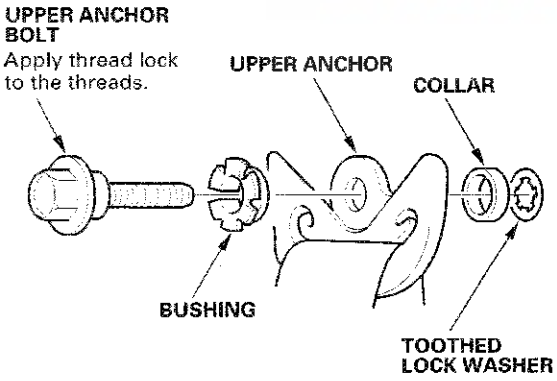

Lower anchor bolt installation

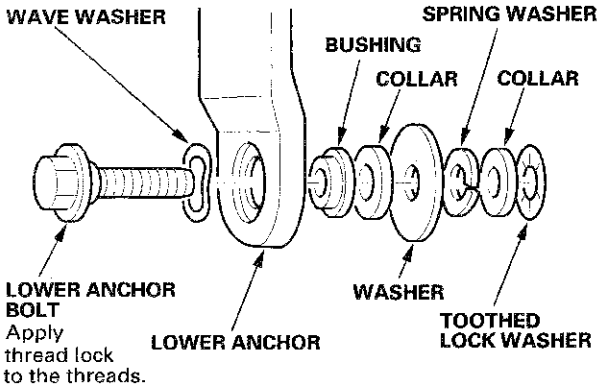

Front seat belt lower anchor installation

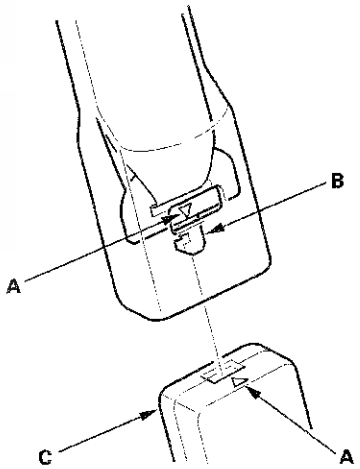

Front Seat Belt Replacement (cont'd)

Front Seat Belt - 4-door

SRS components are located in this area. Review the SRS component locations (see page 24-19) and the precautions and procedures (see page 24-23) before doing repairs or service.

NOTE: Check the front seat belts for damage (see page 24-17), and replace them if necessary.

1. Slide the front seat all the way forward. Carefully pry up on the bottom of the anchor cover (A) to release the hooks (B) and the tab (C), then remove the cover by pulling it upward.

Driver's seat

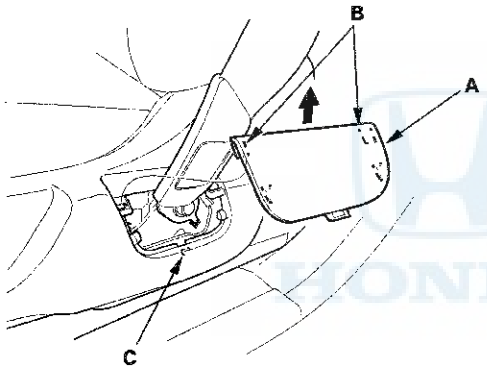

Passenger's seat

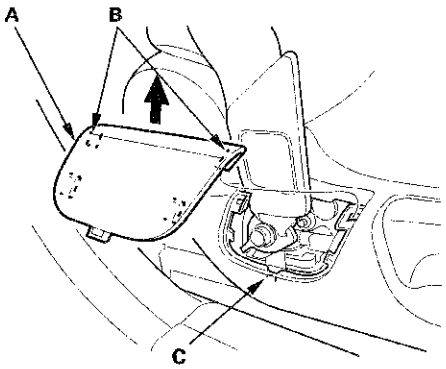

2. Remove the lower anchor bolt (A).

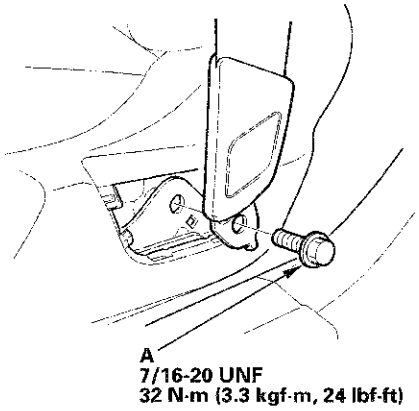

3. Do the battery terminal disconnection procedure (see page 22-89), then wait at least 3 minutes before beginning work.

4. Remove the B-pillar lower trim (see page 20-107).

5. Remove the B-pillar upper trim (see page 20-107).

6. Remove the upper anchor bolt (A).

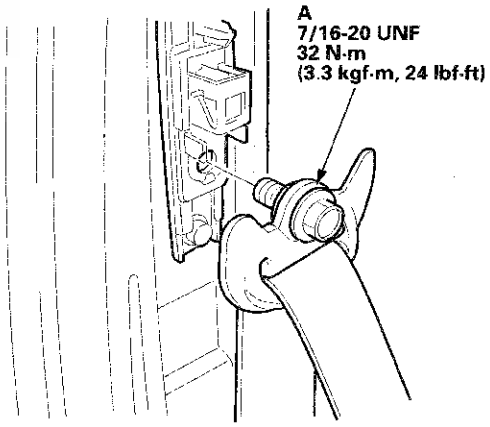

7. Disconnect the seat belt tensioner connector (A). Remove the upper retractor mounting bolt (B) and the lower retractor bolt (C), then remove the front seat belt (D) and the retractor (E).

Driver's side

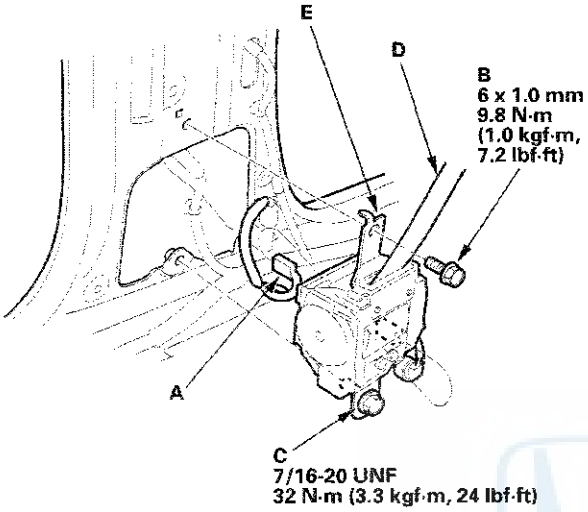

Passenger's side

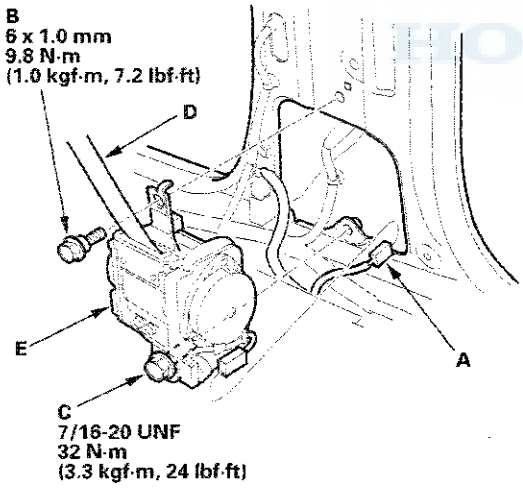

8. Remove the shoulder anchor adjuster (A).

NOTE: Inspect the anchor adjuster for damage, and replace it if necessary.

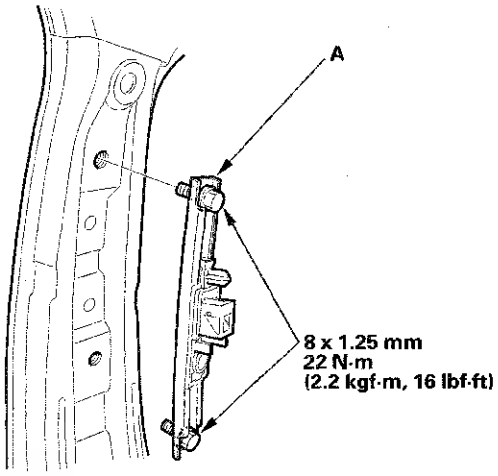

(cont'd)

Front Seat Belt Replacement (cont'd)

9. Install the seat belt in the reverse order of removal, and note these items:

   - Apply medium strength liquid thread lock to the anchor bolts before reinstallation.
   - Tighten the bolts by hand first, then tighten to the specified torque.
   - Check that the retractor locking mechanism functions (see page 24-17).
   - Assemble the washer, the collars, and the bushing on the upper anchor bolt and the retractor bolt as shown.
   - Before installing the anchor bolts, make sure there are no twists or kinks in the seat belt.
   - Make sure the seat belt tensioner connector is plugged in properly.
   - Do the battery terminal reconnection procedure (see page 22-89).
   - Check for any DTCs that may have been set during repairs, and clear them.

Upper anchor bolt installation

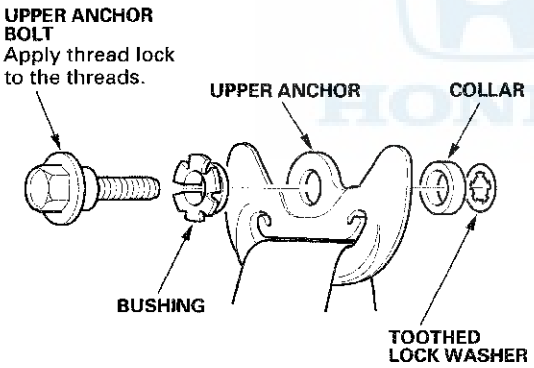

Retractor bolt installation

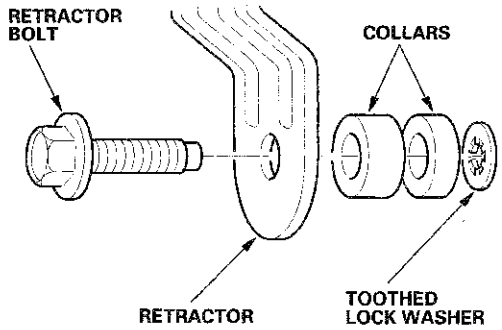

Front Seat Belt Buckle

1. Do the battery terminal disconnection procedure (see page 22-89), then wait at least 3 minutes before beginning work.

2. Remove the front seat (see page 20-181).

3. Lift up the front seat, then detach the seat belt switch connector (A), and detach the harness clip(s) (B) and the harness holder (C) (on the 4-door passenger's seat).

2-door driver's seat (10-way power seat)

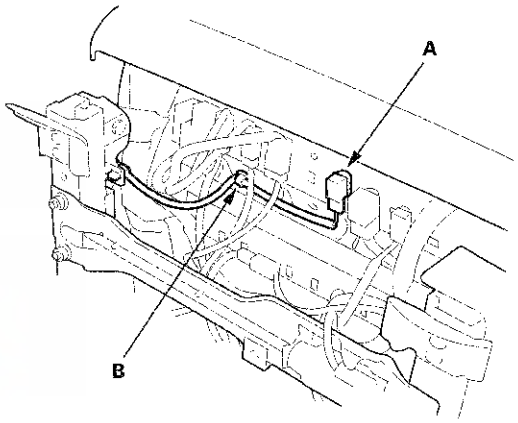

4-door driver's seat (10-way power seat)

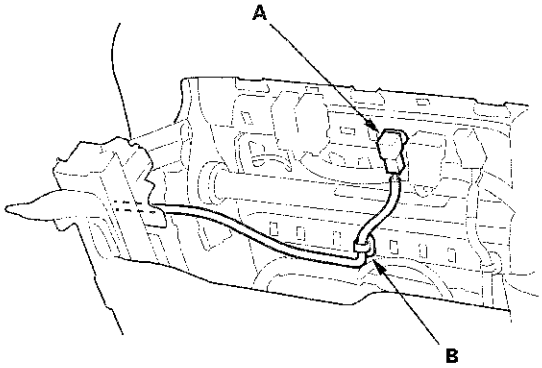

2-door driver's seat (manual height adjustable seat)

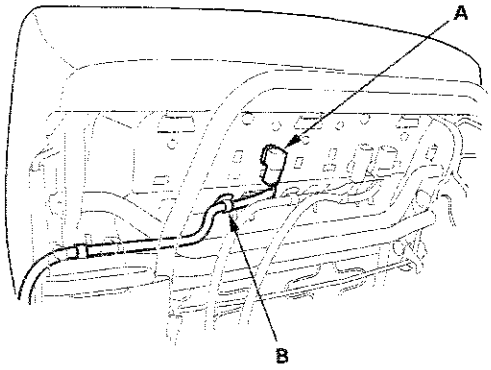

4-door driver's seat (manual height adjustable seat)

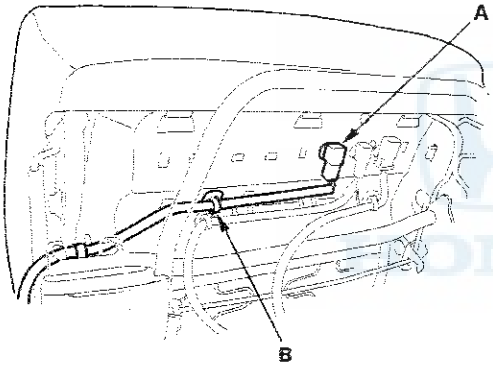

2-door passenger's seat

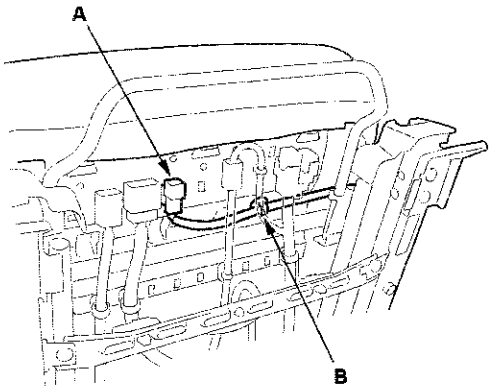

4-door passenger's seat

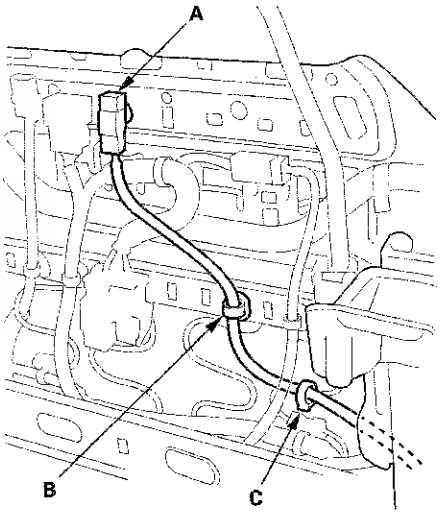

(cont'd)

Front Seat Belt Replacement (cont'd)

4. Remove the center anchor bolt (A), and detach the harness clips (B), then remove the seat belt buckle (C).

Driver's seat (10-way power seat)

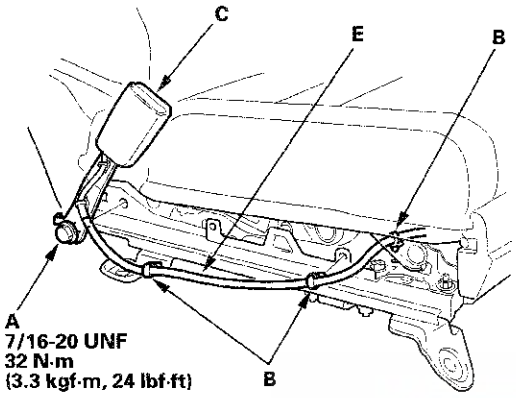

Driver's seat (manual height adjustable seat)

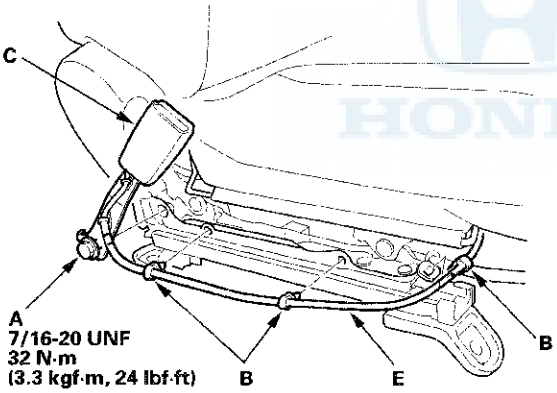

2-door passenger's seat

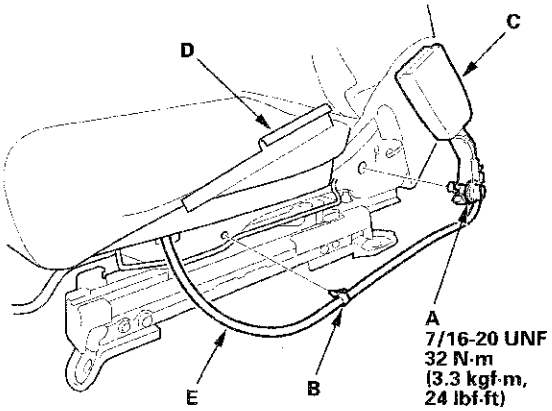

4-door passenger's seat

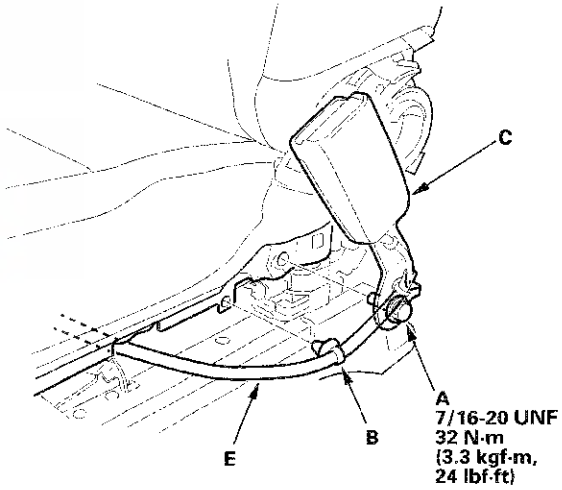

5. 2-door passenger's seat: Release the hook strip (D), and pull back the seat cushion cover.

6. Pull the seat belt switch harness (E) out through the space between the seat cushion and the seat track (except 2-door passenger's seat), or through the hole in the seat track (2-door passenger's seat).

7. Install the buckle in the reverse order of removal, and note these items:

   - Assemble the washers and the collar on the center anchor bolt as shown.
   - Apply medium strength liquid thread lock to the center anchor bolt before reinstallation.
   - Tighten the bolts by hand first, then tighten to the specified torque.
   - Make sure the seat belt switch connector is plugged in properly.
   - Do the battery terminal reconnection procedure (see page 22-89).
   - Check for any DTCs that may have been set during repairs, and clear them.

Center anchor bolt installation (2-door)

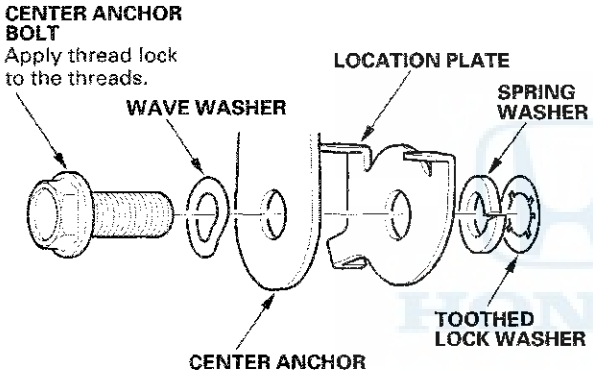

Center anchor bolt installation (4-door driver's seat)

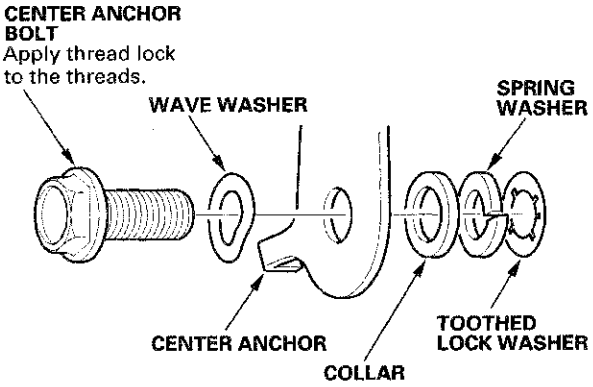

Center anchor bolt installation (4-door passenger's seat)

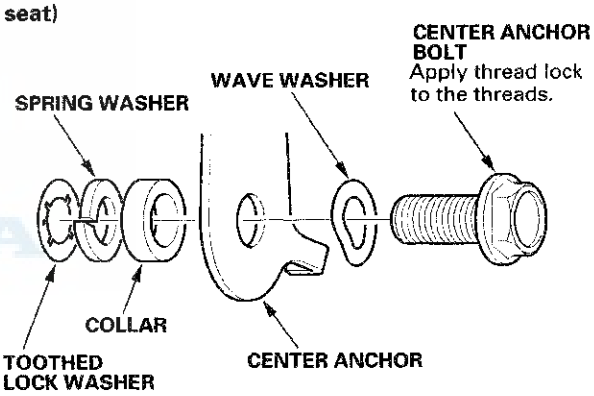

(cont'd)

Front Seat Belt Replacement (cont'd)

2-door Passenger's Seat Belt Lower Anchor

1. Remove the door sill trim (see page 20-97).
2. Detach the front passenger's seat belt anchor plate and the anchor cover from the lower anchor.
3. Remove the lower anchor bolt (A), then remove the lower anchor (B).

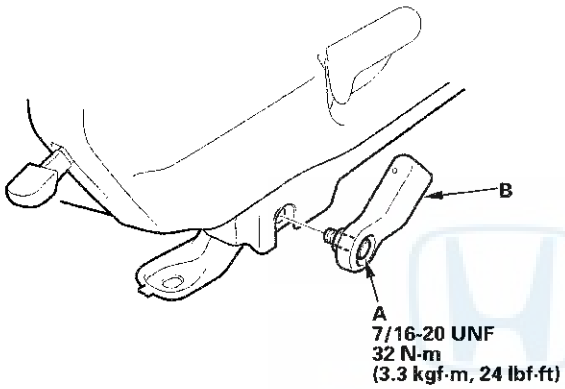

4. Install the lower anchor in the reverse order of removal, and note these items:
   - Apply medium strength liquid thread lock to the lower anchor bolt before reinstallation.
   - Assemble the washers, the collars, and the bushing on the lower anchor bolt as shown.

Lower anchor bolt installation

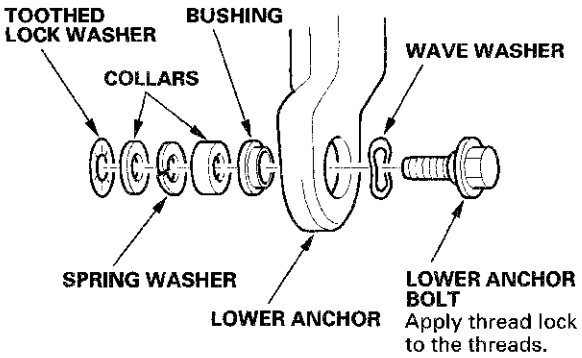

Rear Seat Belt Replacement

NOTE: Check the rear seat belts for damage (see page 24-17), and replace them if necessary.

Rear Seat Belt

1. Remove the rear seat cushion (see page 20-225).
2. Remove the lower anchor bolt (A).

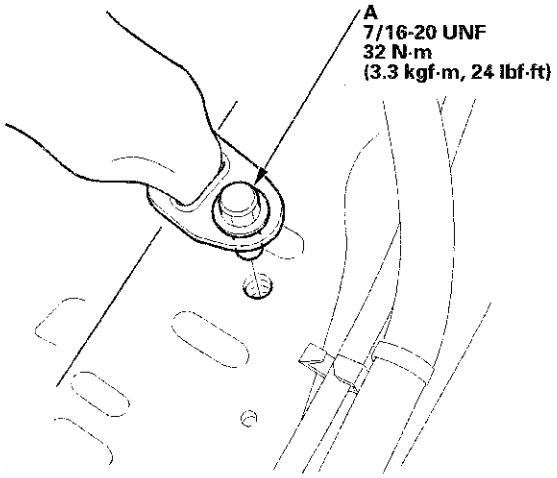

3. Remove these items:
   - 2-door:
     - Rear seat-back (see page 20-223)
     - C-pillar trim, both sides (see page 20-110)
     - Rear shelf (see page 20-119)
     - Rear side trim panel (see page 20-118)
   - 4-door:
     - Rear seat side bolsters, both sides (see page 20-225)
     - C-pillar trim, both sides (see page 20-115)
     - Rear shelf (see page 20-119)

4. 2-door: Remove the bolts (A) and clips (B), then carefully move the side curtain airbag (C) aside to gain access to the retractor bolt (D).

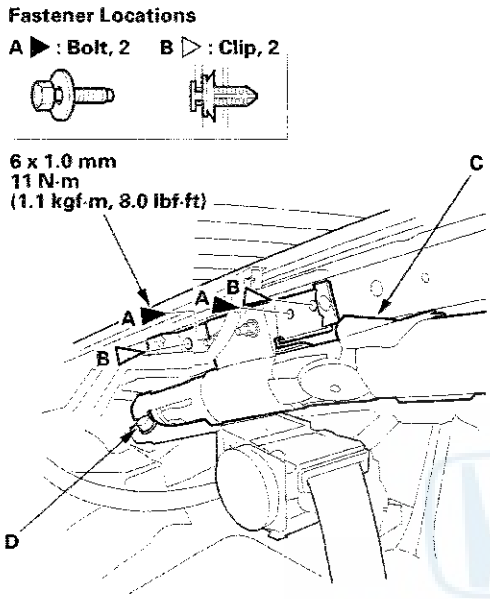

5. Remove the retractor mounting bolt (A) and retractor bolt (B), then remove the rear seat belt (C) and the retractor (D). 4-door is shown; 2-door is similar.

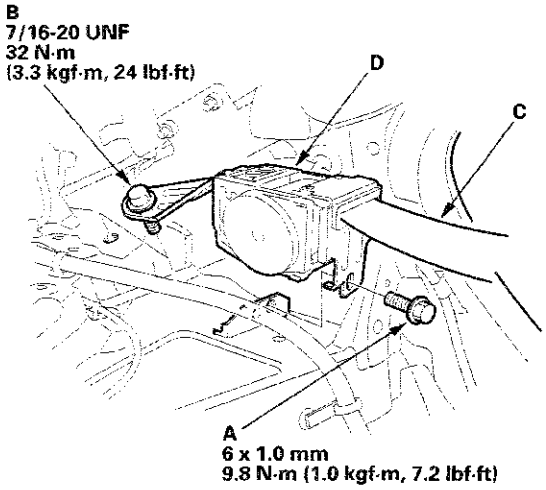

6. Install the rear seat belt and retractor in the reverse order of removal, and note these items:

- Apply medium strength liquid thread lock to the anchor bolts before reinstallation.
- 2-door: Replace the removed side curtain airbag mounting bolts with new ones.
- Check that the retractor locking mechanism functions (see page 24-17).
- Before installing the anchor bolt, make sure there are no twists or kinks in the rear seat belt.

(cont'd)

Rear Seat Belt Replacement (cont'd)

Center Seat Belt and Seat Belt Buckles

1. Remove the rear seat cushion (see page 20-225).

2. Remove the center anchor bolts (A), then remove the right seat belt buckle (B), the center seat belt buckle (C), and the left seat belt buckle (D).

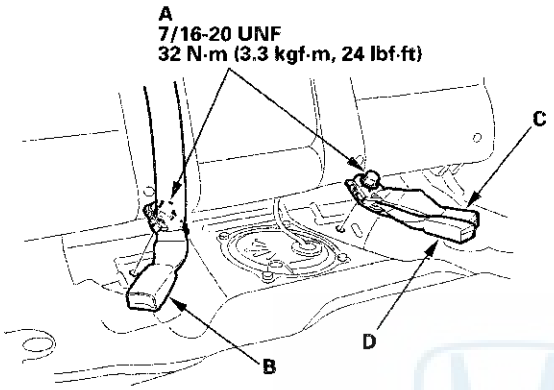

3. Fold the rear seat-back down.

4. Pull the center seat belt out through the slit in the seat belt guide.

5. Remove these items:

   - 2-door: Rear shelf (see page 20-119)
   - 4-door:
     - Rear seat side bolsters, both sides (see page 20-225)
     - C-pillar trim, both sides (see page 20-115)
     - Rear shelf (see page 20-119)

6. Remove the retractor mounting tapping screw (A) and the retractor bolt (B), then remove the center seat belt (C) and the retractor (D). 4-door is shown; 2-door is similar.

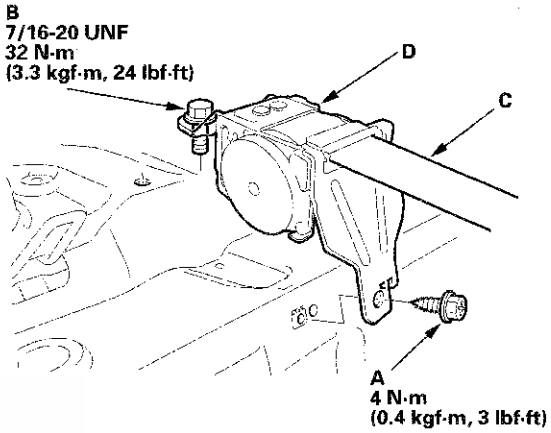

7. Install the seat belt and buckles in the reverse order of removal, and note these items:

   - Apply medium strength liquid thread lock to the center anchor bolts before reinstallation.
   - Tighten the bolts by hand first, then tighten to the specified torque.
   - Check that the retractor locking mechanism functions (see page 24-17).
   - Assemble the washer on the center anchor bolt as shown.
   - Before installing the center anchor bolt, make sure there are no twists or kinks in the center seat belt.
   - Make sure the rear center emergency locking retractor (ELR) is pointing straight forward.

Center anchor bolt installation

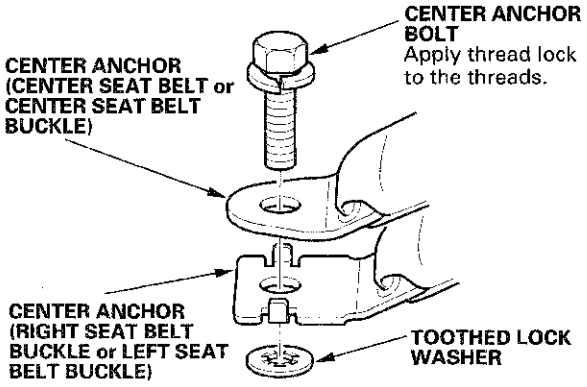

Inspection

Out of Vehicle

For front seat belt retractors with seat belt tensioners, review the SRS component locations, 2-door (see page 24-21), 4-door (see page 24-19) and the precautions and procedures (see page 24-23) before doing repairs or service.

Retractor

1. Before installing the retractor, check that the seat belt can be pulled out freely.

2. Make sure that the seat belt does not lock when the retractor (A) is leaned slowly up to 15 ° from the mounted position. The seat belt should lock when the retractor is leaned over 40 °. Do not attempt to disassemble the retractor.

2-door driver's side

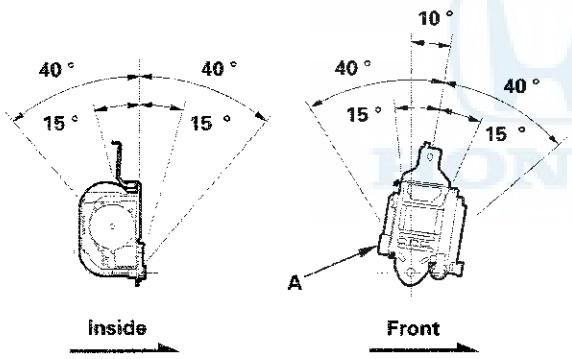

2-door passenger's side

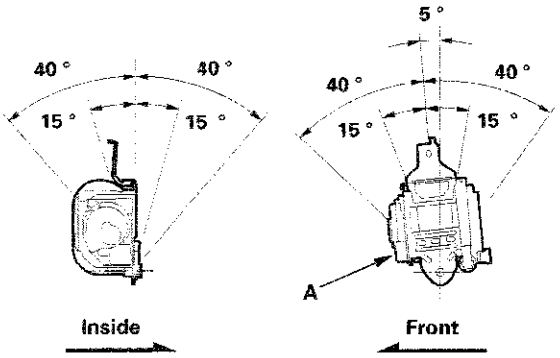

4-door driver's side

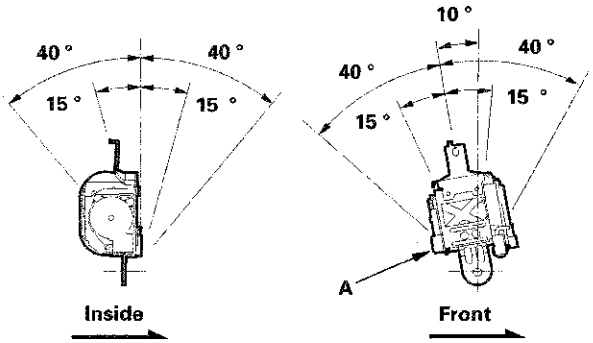

4-door passenger's side

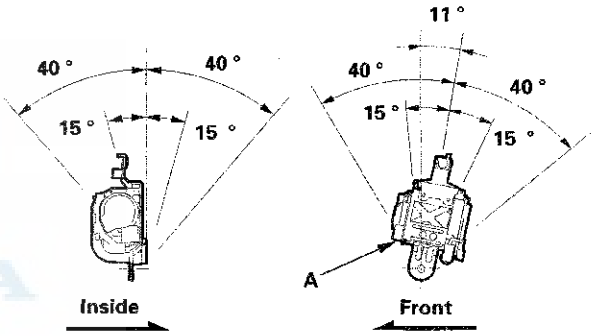

(cont'd)

Inspection (cont'd)

Rear

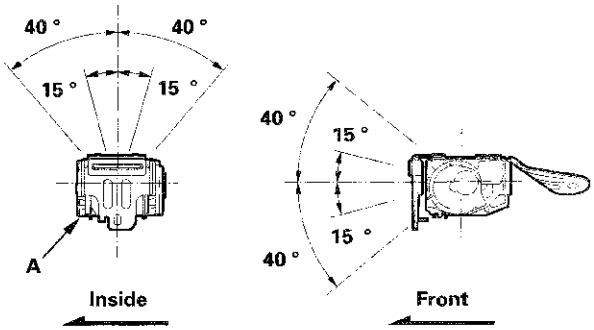

Rear center

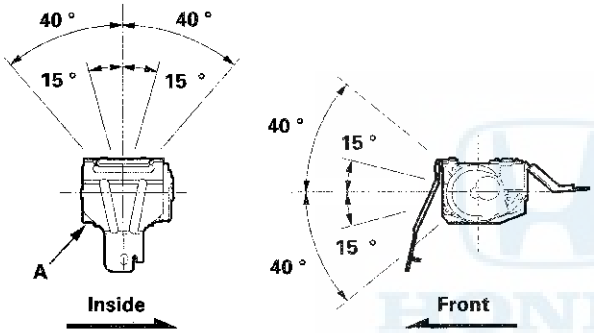

3. Replace the seat belt with a new assembly if there is any abnormality. Do not disassemble any part of the seat belt for any reason.

In-vehicle

1. Check that the seat belt is not twisted or caught on anything.

2. After installing the anchors, check for free movement on the anchor bolts. If necessary, remove the anchor bolts and check that the washers and other parts are not damaged or improperly installed.

3. Check the seat belts for damage or discoloration. Clean with a shop towel if necessary. Use only soap and water to clean the seat belts.

   NOTE: Dirt build-up in the loops of the upper anchors can cause the seat belts to retract slowly. Wipe the inside of the loops with a clean cloth dampened in isopropyl alcohol.

4. Check that the seat belt does not lock when pulled out slowly. The seat belt is designed to lock only during a sudden stop or impact.

5. Make sure that the seat belt will retract automatically when released.

6. For each passenger's seat belt, check the seat belt retractor locking automatic locking retractor (ALR) mechanism. This function is for securing child seats.

   -1 Pull the seat belt all the way out to engage the ALR. The seat belt should retract, but not extend. This is normal.
   -2 To disengage the ALR, release the seat belt and allow it to fully retract, then pull the seat belt out part-way. The seat belt should retract and extend normally.

7. Replace the seat belt with a new assembly if there is any abnormality. Do not disassemble any part of the seat belt for any reason.

Component Location Index

4-Door

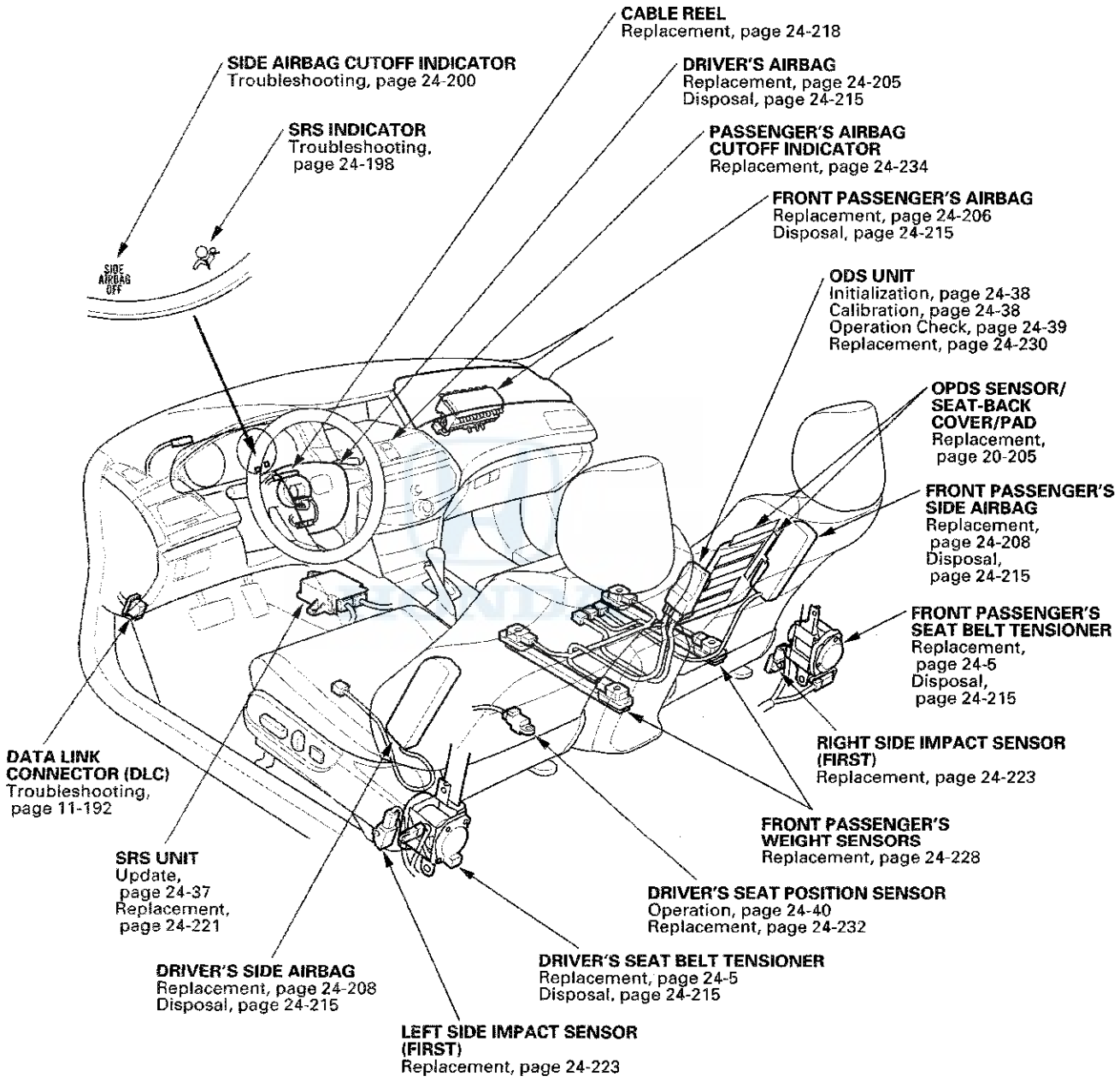

(cont'd)

Component Location Index (cont'd)

4-Door

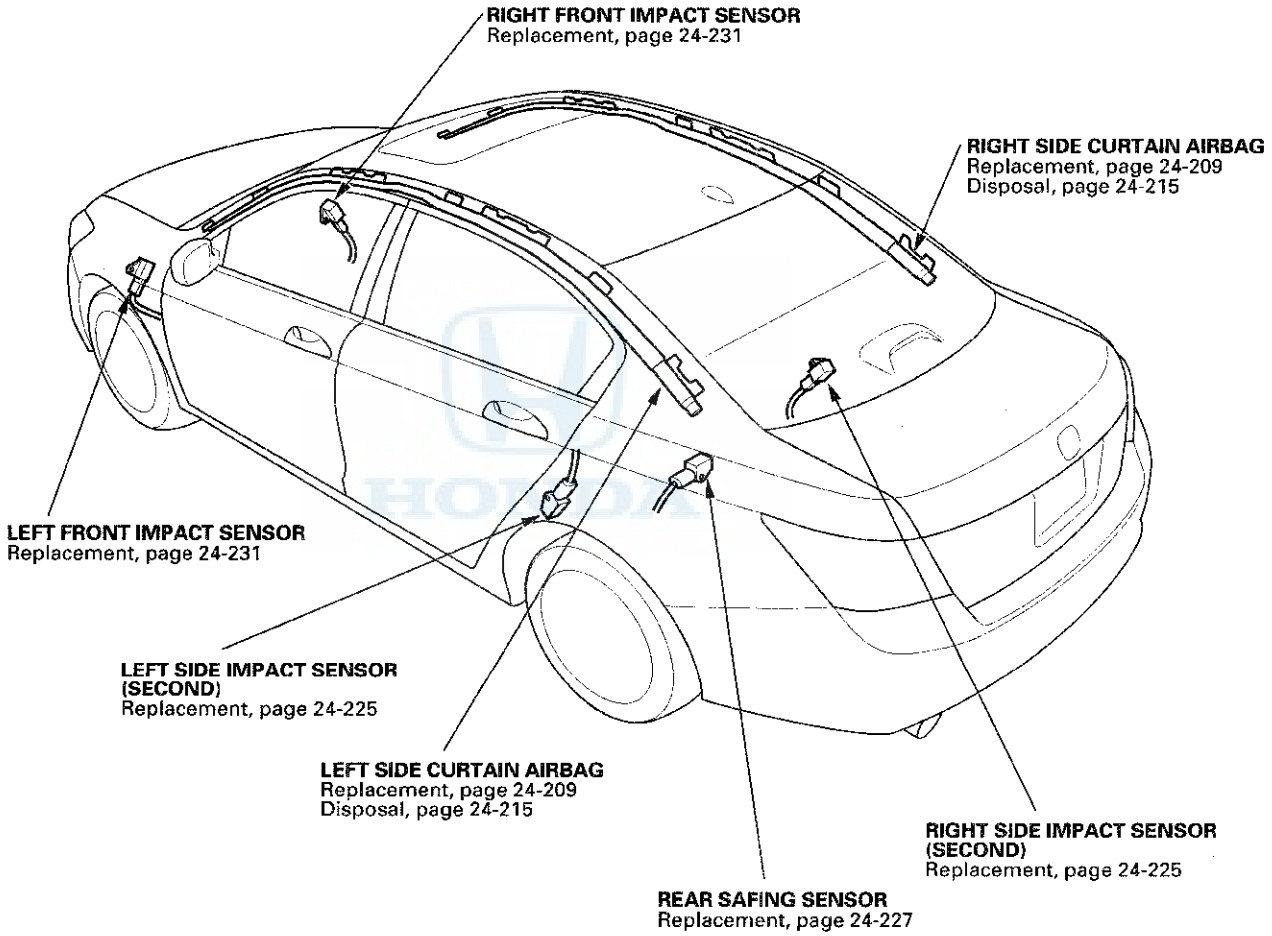

2-Door

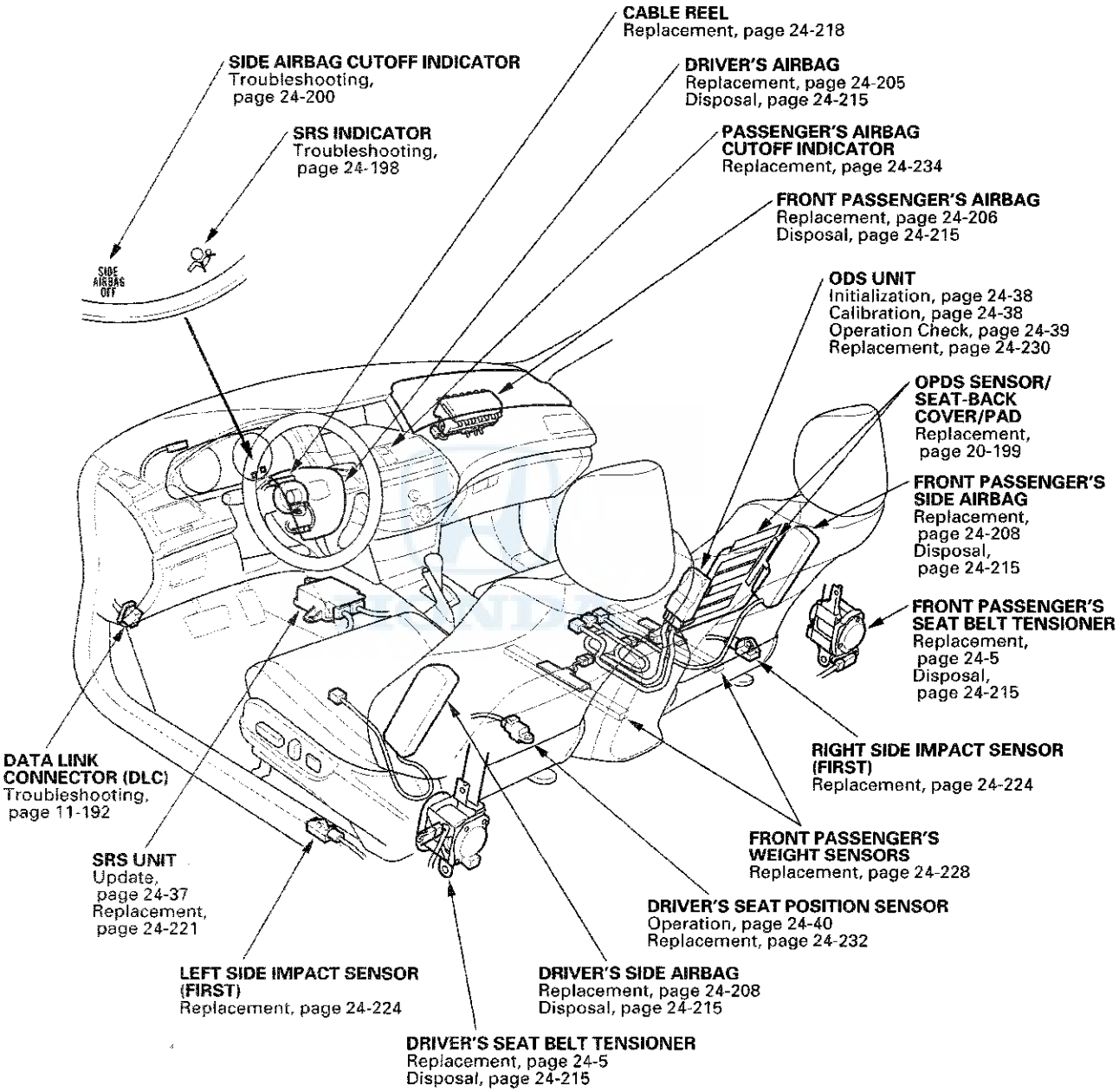
CABLE REEL
Replacement, page 24-218
SIDE AIRBAG CUTOFF INDICATOR
Troubleshooting, page 24-200
DRIVER'S AIRBAG
Replacement, page 24-205
Disposal, page 24-215
SRS INDICATOR
Troubleshooting, page 24-198
PASSENGER'S AIRBAG CUTOFF INDICATOR
Replacement, page 24-234
FRONT PASSENGER'S AIRBAG
Replacement, page 24-206
Disposal, page 24-215
SIDE AIRBAG OFF
ODS UNIT
Initialization, page 24-38
Calibration, page 24-38
Operation Check, page 24-39
Replacement, page 24-230
OPDS SENSOR/ SEAT-BACK COVER/PAD
Replacement, page 20-199
FRONT PASSENGER'S SIDE AIRBAG
Replacement, page 24-208
Disposal, page 24-215
FRONT PASSENGER'S SEAT BELT TENSIONER
Replacement, page 24-5
Disposal, page 24-215
RIGHT SIDE IMPACT SENSOR (FIRST)
Replacement, page 24-224
DATA LINK CONNECTOR (DLC)
Troubleshooting, page 11-192
FRONT PASSENGER'S WEIGHT SENSORS
Replacement, page 24-228
SRS UNIT
Update, page 24-37
Replacement, page 24-221
DRIVER'S SEAT POSITION SENSOR
Operation, page 24-40
Replacement, page 24-232
LEFT SIDE IMPACT SENSOR (FIRST)
Replacement, page 24-224
DRIVER'S SIDE AIRBAG
Replacement, page 24-208
Disposal, page 24-215
DRIVER'S SEAT BELT TENSIONER
Replacement, page 24-5
Disposal, page 24-215

(cont'd)

Component Location Index (cont'd)

2-Door

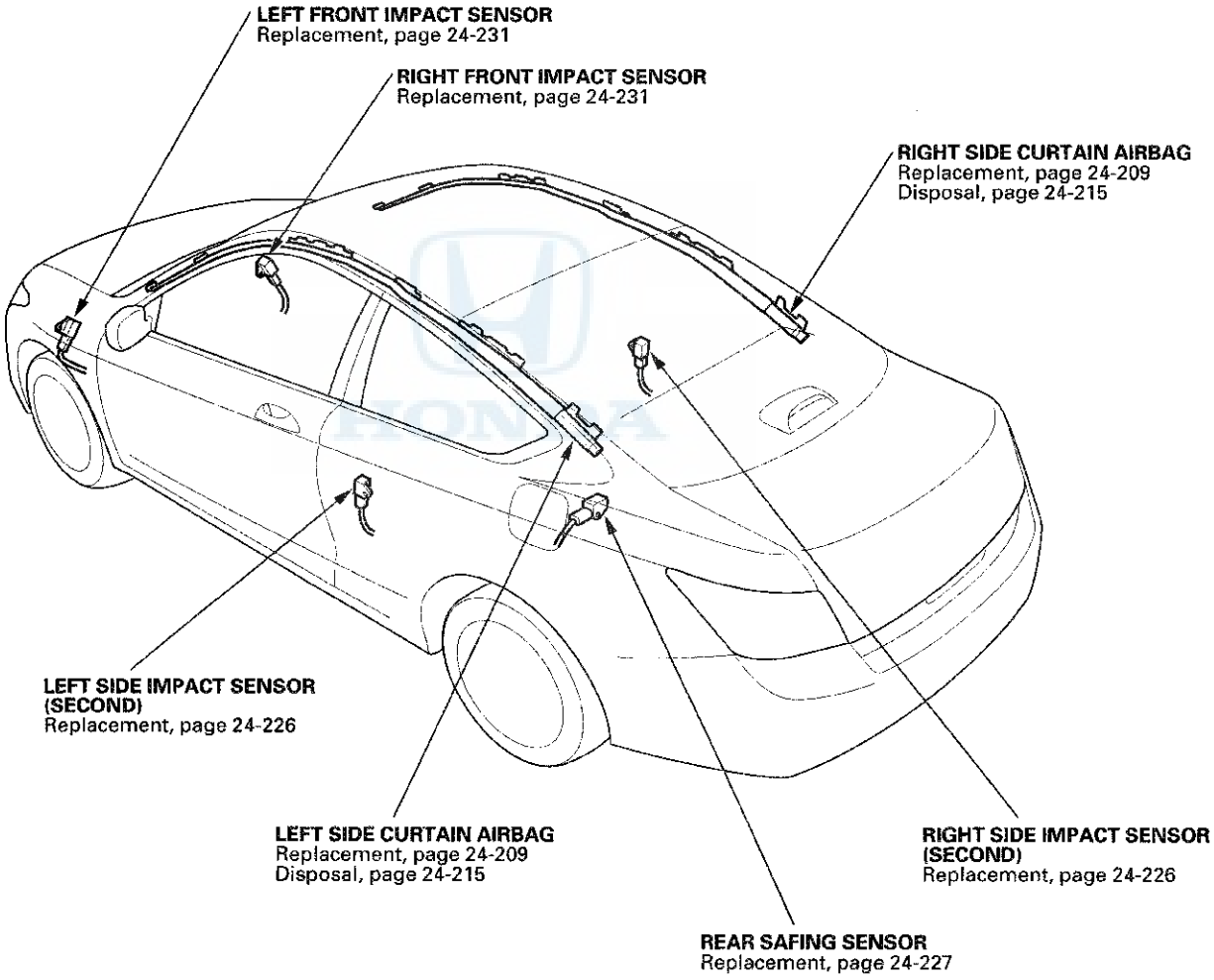

Precautions and Procedures

General Precautions

NOTE: Some systems store data in memory that is lost when the battery is disconnected. Before disconnecting the battery, refer to Battery Terminal Disconnection and Reconnection (see page 22-89).

Please read the following precautions carefully before servicing the airbag system. Observe the instructions described in this manual, or the airbags could accidentally deploy and cause damage or injuries.

- Except when doing electrical inspections, always turn the ignition switch to LOCK (0), disconnect the negative cable from the battery, then wait for 3 minutes before starting work.

  NOTE: The SRS memory is not erased even if the ignition switch is turned to LOCK (0) or the battery cables are disconnected from the battery.

- Use replacement parts which are manufactured to the same standards and quality as the original parts. Do not install used SRS parts. Use only new parts when making SRS repairs.

- Carefully inspect any SRS part before you install it. Do not install any part that shows signs of being dropped or improperly handled, such as dents, cracks or deformation.

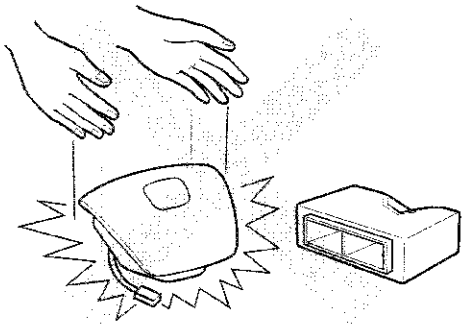

- Before disconnecting the SRS unit connectors, always disconnect the appropriate SRS parts connectors.

- Use only a digital multimeter to check the system. If it is not a Honda multimeter, make sure its output is 10 mA (0.01 A) or less when switched to the lowest value in the ohmmeter range. A tester with a higher output could cause accidental deployment and possible injury.

- Do not put objects on the front passenger's airbag.

Steering-Related Precautions

Cable Reel Alignment

- Misalignment of the cable reel could cause an open in the wiring, making the SRS system, remote steering wheel controls, or the horn inoperative. Center the cable reel whenever you do the following (see step 6 on page 24-220).
  - Installation of the steering wheel
  - Installation of the cable reel
  - Installation of the steering column
  - Other steering-related adjustment or installation
- Do not disassemble the cable reel.
- Do not apply grease to the cable reel.
- If the cable reel shows any signs of damage, replace it with a new one. For example, if the cable reel does not rotate smoothly, replace it.

(cont'd)

Precautions and Procedures (cont'd)

Airbag Handling and Storage

Do not disassemble an airbag. It has no serviceable parts. Once an airbag has been deployed, it cannot be repaired or reused.

For temporary storage of an airbag during service, observe the following precautions.

- Store the removed airbag with the pad surface up. Never put anything on the airbag.

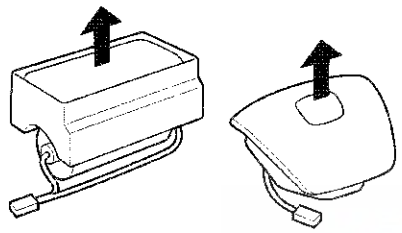

- To prevent damage to the airbag, keep it away from any oil, grease, detergent, or water.

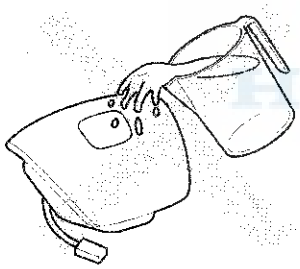

- Store the removed airbag on a secure, flat surface away from any high heat source (exceeding 200 °F/ 93 °C).

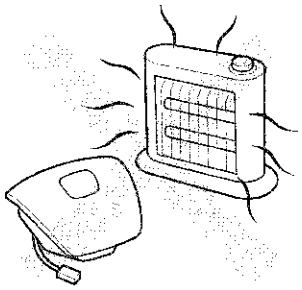

- Never do electrical tests on the airbags, such as measuring resistance.
- Do not position yourself in front of the airbag during removal, inspection, or replacement.

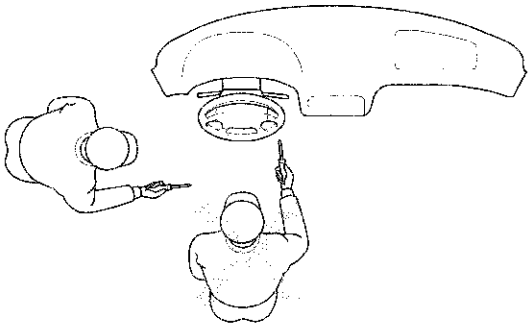

- For proper disposal of a damaged airbag, refer to airbag disposal (see page 24-215).
- The side curtain airbag module assembly is a long, jointed part containing an inflator (A), a flexible bag (B), and brackets (C). When removing or installing the side curtain airbag assembly, never:
  - Handle the flexible bag (B).
  - Drop the airbag assembly.
  - Cut, tear, or unwrap the tape strips.

4-Door

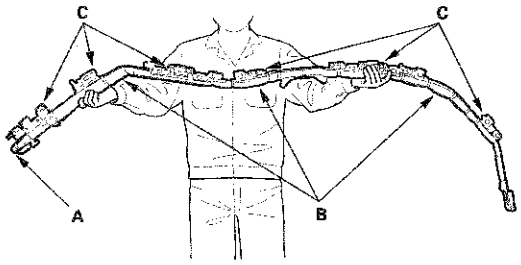

2-Door

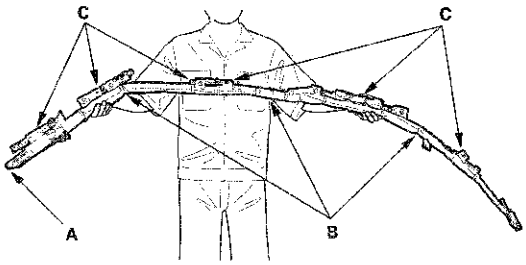

SRS Unit, Front and Side Impact Sensors, Rear Safing Sensor, Driver's Seat Position Sensor, and Front Passenger's Weight Sensors

NOTE: Some systems store data in memory that is lost when the battery is disconnected. Before disconnecting the battery, refer to Battery Terminal Disconnection and Reconnection (see page 22-89).

- Turn the ignition switch to LOCK (0), disconnect the negative cable from the battery, then wait for 3 minutes before starting installation or replacement of the SRS unit or disconnecting the connectors from the SRS unit.

- Be careful not to bump or impact the SRS unit, the front impact sensors, the side impact sensors, or the rear safing sensor when the ignition switch is in ON (II), or for at least 3 minutes after the ignition switch is turned to LOCK (0).

- During installation or replacement, be careful not to bump (by impact wrench, hammer, etc.) the area around the SRS unit, the front impact sensors, the side impact sensors, or the rear safing sensor. The airbags could accidentally deploy and cause damage or injury.

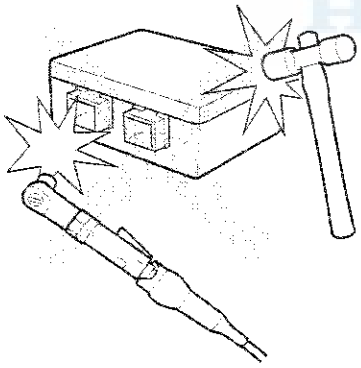

- After a collision where the front airbag, the side airbags, the side curtain airbags, or the seat belt tensioner deployed, go to Component Replacement/ Inspection after Deployment (see page 24-202). After a collision airbags did not deploy, inspect for any damage or any deformation on the SRS unit, the front impact sensors, the rear safing sensor, and the side impact sensors. Replace all damaged parts.

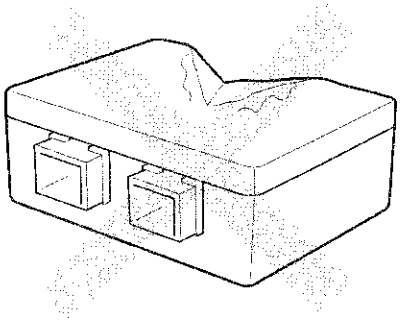

- Do not disassemble the SRS unit, the front impact sensors, the side impact sensors, the rear safing sensor, driver's seat position sensor or the front passenger's weight sensors.

- Alway install the SRS unit, and all impact sensors and the rear safing sensor securely with new TORX bolts torqued to 9.8 N·m (1.0 kgf·m, 7.2 lbf·ft).

- Do not spill water or oil on the SRS unit or any of the sensors.

(cont'd)

Precautions and Procedures (cont'd)

Wiring Precautions

Some of the SRS wiring can be identified by a special yellow outer covering and the SRS connectors can be identified by their yellow color. Observe the following instructions.

- Never attempt to modify, splice, or repair SRS wiring. If there is an open or damage to the SRS wiring, replace the harness.

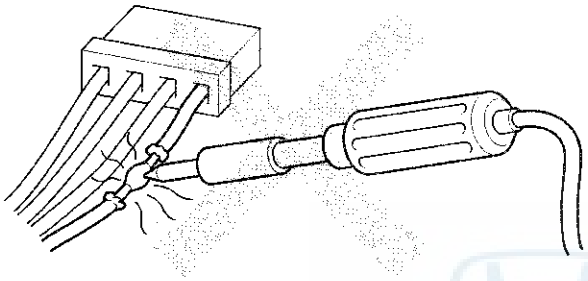

- Be sure to install the harness wires so they do not get pinched or interfere with other parts.

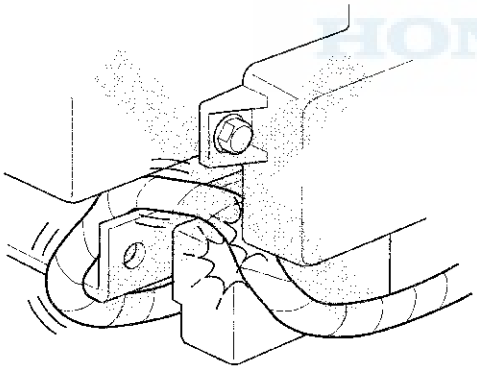

- Make sure all SRS ground locations are clean, and the grounds are securely fastened for optimum metal-to-metal contact. Poor grounds can cause intermittent problems that are difficult to diagnose.

- Do not use any silicone based cleaners or lubricants on any SRS connectors or terminals.

Precautions for Electrical Inspections

- When using electrical test equipment, insert the probe of the tester into the wire side of the connector (except water proof connector). Do not insert the probe of the tester into the terminal side of the connector, and do not tamper with the connector.

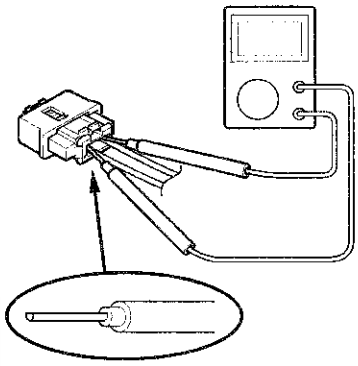

- Use a back probe adaptor 07TAZ-001020A. Do not insert the probe forcibly.

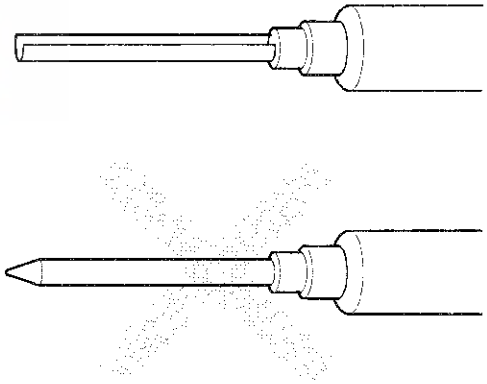

- Use specified service connectors in troubleshooting. Using improper tools could cause a diagnostic error due to poor metal-to-metal contact.

SRS Unit Connectors

When diagnosing or troubleshooting at an SRS unit connector (A), use the terminal test port (B) below the terminal (C) you need to check. Gently insert the pin probes of the tester or jumper wire at the terminal test port from the terminal side.

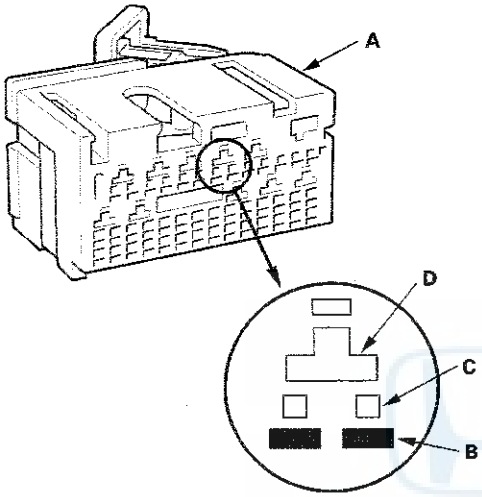

Terminal side of female terminals

NOTE:
- Do not insert the pin probes of the tester or jumper wire at the terminal port and SRS short canceller terminal port (D).
- To prevent damage to the connector terminals, do not insert the test equipment probes, paper clips, or other substitutes as they can damage the terminals. Damaged terminals cause a poor connection and an incorrect measurement.

Water Proof Connectors for SRS System

When diagnosis/troubleshooting is done at the water proof connector (A), use the terminal test port (B) above the terminal (C) you need to check. Gently contact the pin probe of the tester or jumper wire at the terminal test port from the terminal side.

Terminal side of female terminals

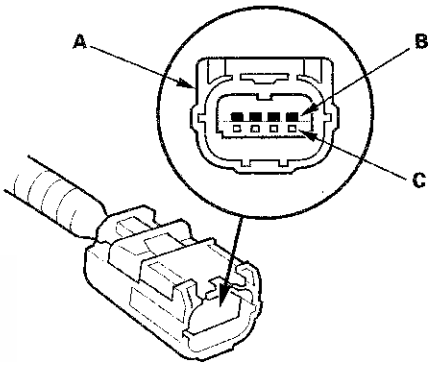

NOTE:
- Do not insert the pin probes of the tester or a jumper wire at the terminal port.
- To prevent damage to the connector terminals, do not insert the test equipment probes, paper clips, or other substitutes as they can damage the terminals. Damaged terminals cause a poor connection and an incorrect measurement.

(cont'd)

Precautions and Procedures (cont'd)

Lever-Locked Connector

The SRS unit connectors have a lever lock.

SRS Unit Connectors

Disconnecting
To release the lock, pull the lever (A) while pushing the lock (B) on the outside of the connector, then pull out the connector (C).

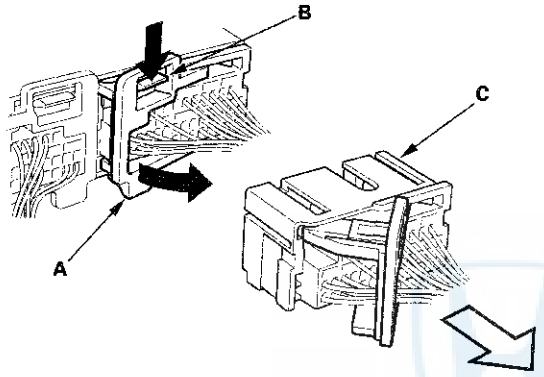

Connecting
To reconnect the connector, push in on the connector sleeve (D). As the connector is pressed in, the lever (A) moves to the locked position.

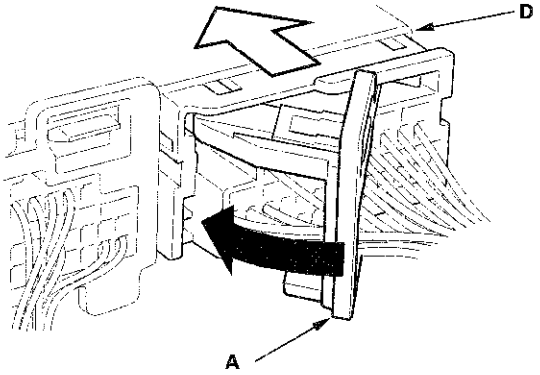

Spring-Loaded Lock Connector

Some SRS system connectors have a spring-loaded lock.

Front Airbag Connectors

Disconnecting
To release the lock, pull the spring-loaded sleeve (A) toward the stop (B) while holding the opposite half of the connector. Then pull the connector halves apart. Be sure to pull on the sleeve and not on the connector.

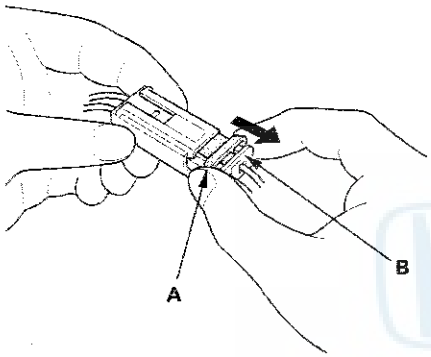

Connecting
To reconnect, hold the pawl-side connector, and press on the back of the sleeve-side connector in the direction shown. As the two connector halves are pressed together, the sleeve (A) is pushed back by the pawl (C). Do not touch the sleeve.

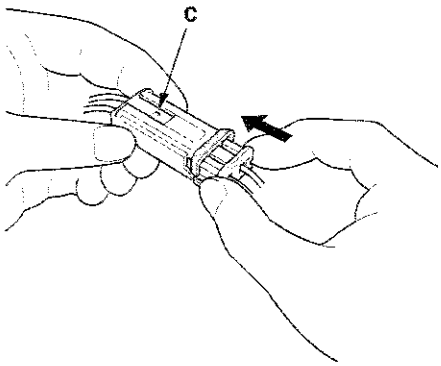

Side Airbag Connector

Disconnecting
To release the lock, pull the spring-loaded sleeve (A) toward the stop (B) while holding the opposite half of the connector. Then pull the connector halves apart. Be sure to pull on the sleeve and not on the connector half.

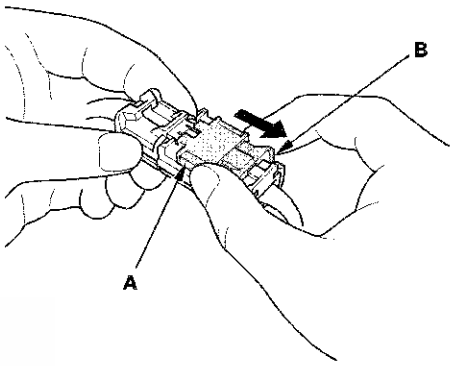

Connecting
Hold both connector halves, and press them firmly together until the projection (C) of the sleeve-side connector clicks.

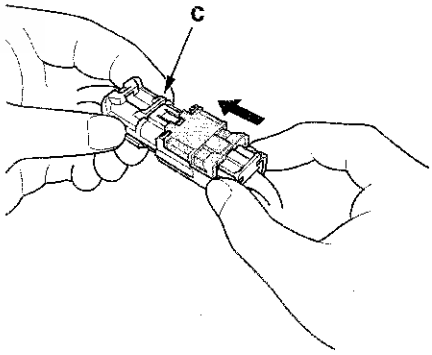

(cont'd)

Precautions and Procedures (cont'd)

Opening the SRS Unit Shorting Connectors for Diagnosis

Special Tools Required
SRS short canceller 070AZ-SAA0100

NOTE:
- To prevent damage to the connector cavity, insert short canceller straight into the cavity from the terminal side.
- Before installing a short canceller, wash it with electrical contact cleaner, then dry it with compressed air.
- Do not use a short canceller if it is damaged.
- Make sure to remove the short canceller before reconnection.
- Some systems store data in memory that is lost when the battery is disconnected. Before disconnecting the battery, refer to Battery Terminal Disconnection and Reconnection (see page 22-89).

When SRS unit connectors A (39P) or B (39P) are disconnected, a short circuit is automatically created in the connector by its own function to prevent airbag deployment. The circuit may need to be open sometimes when diagnosing the system. Insert a short canceller (070AZ-SAA0100) in the specified cavities when necessary to keep the circuit open for diagnosis.

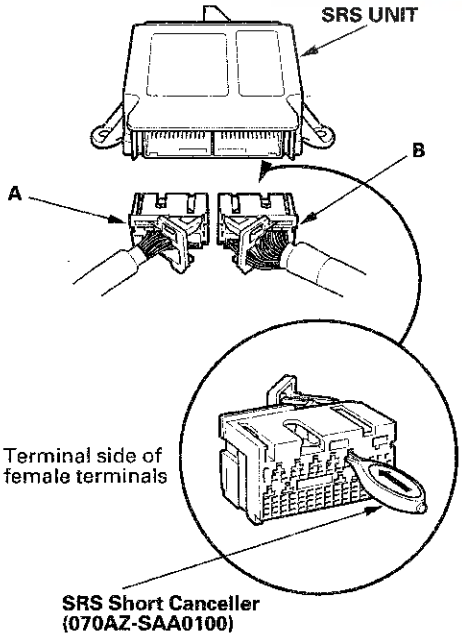

Terminal numbers are shown from the wire side of the female terminals. Insert the short canceller(s) into the cavities on the terminal side of the connector.

SRS UNIT CONNECTOR A (39P)

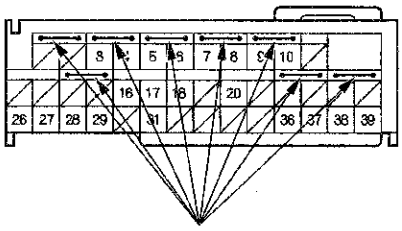

SRS UNIT CONNECTOR B (39P)

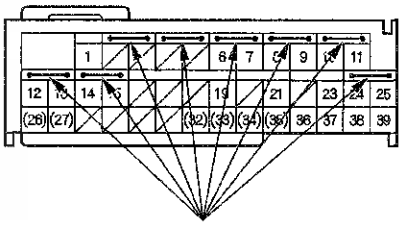

Seats with Side Airbags

Seats with side airbags have a "SIDE AIRBAG" label on the seat-back.

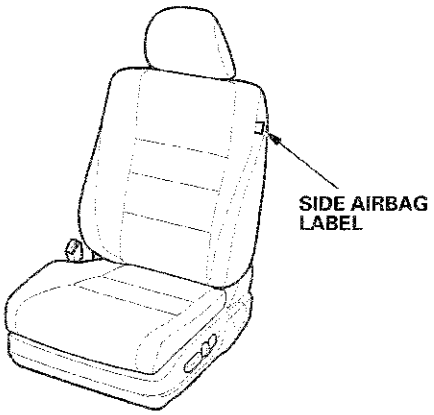

- Clean the seats with a damp cloth. Do not soak the seats with liquid. Do not spray steam on the seats.
- Do not repair a torn or frayed seat-back cover. Replace the seat-back cover if it is damaged.
- If the side airbag was deployed in a collision, refer to Component Replacement/Inspection After Deployment (see page 24-202).
- Never put aftermarket accessories on the seats (covers, pads, seat heaters, lights, etc.).

Disconnecting System Connectors

1. Turn the ignition switch to LOCK (0). Disconnect the negative cable from the battery, then wait at least 3 minutes.

Driver's Airbag

2. Remove the access panel (A) from the steering wheel, then disconnect the driver's airbag 4P connector (B) from the cable reel.

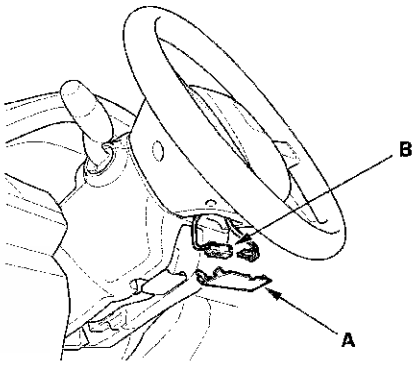

(cont'd)

Precautions and Procedures (cont'd)

Front Passenger's Airbag

3. Disconnect the glove box damper and release the glove box stop on each side from the dashboard by pushing them inside (see page 20-161), then disconnect the connector clip, then disconnect the front passenger's airbag 4P connector (A) from the dashboard wire harness.

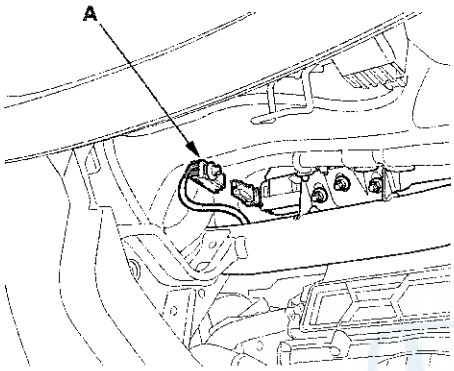

Side Airbag

4. Disconnect driver's and front passenger's side airbag 2P connectors (A) from the SRS floor wire harness.

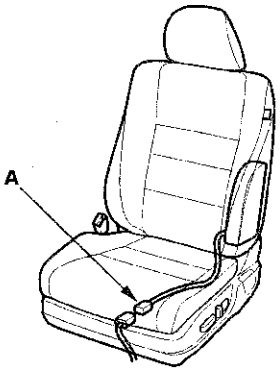

Seat Belt Tensioner

7. Remove the B-pillar lower trim (see page 20-107), then disconnect both SRS floor wire harness 4P connectors (A) from the seat belt tensioners.

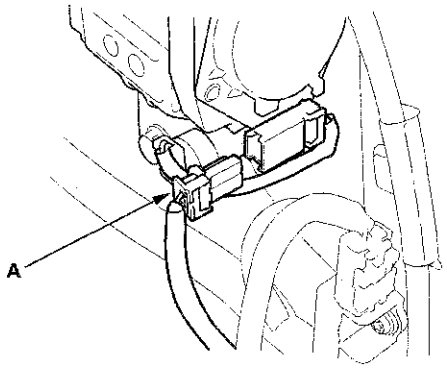

SRS Unit

8. Remove the audio disc changer (with navigation) (see page 23-113) or center pocket (without navigation) (see page 20-155), then disconnect SRS unit connectors A and B from the SRS unit.

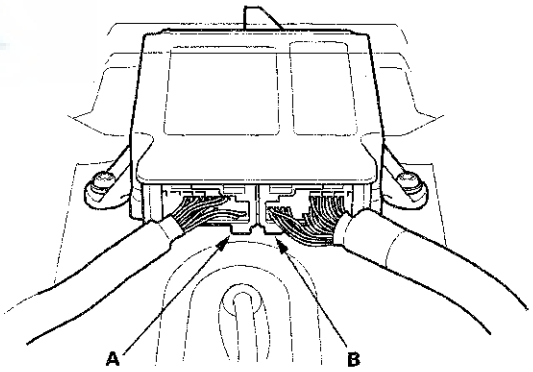

General Troubleshooting Information

DTC (Diagnostic Trouble Codes)

The self-diagnostic function of the SRS system allows it to locate the causes of system problems and store this information in memory. For easier troubleshooting, this data can be retrieved via a data link circuit.

- When you turn the ignition switch to ON (II), the SRS indicator should come on. If it goes off after 6 seconds, the system is normal, and is not currently detecting any abnormality.
- If there is an abnormality, the system locates and defines the problem, stores this information in memory, and turns on the SRS indicator. The data remains in memory even if the ignition switch is turned to LOCK (0) or the battery is disconnected.
- The data is stored in memory as a diagnostic trouble code (DTC).
- DTCs are either latching or resetting depending on the malfunction. With resetting DTCs, the SRS indicator goes off the next time the ignition switch is turned to ON (II) and the system is normal, but the DTC is still stored. With latching DTCs, the SRS indicator does not turn OFF until the malfunction is repaired and the DTC is cleared.
- When you connect the HDS to the 16P data link connector (DLC), you can retrieve a more detailed DTC in the HDS "SRS" menu.

  NOTE: Only read DTCs from the SRS menu, not from SWS menus unless instructed to check SWS DTCs. SWS (ODS unit) DTCs are subcodes of SRS unit DTCs. Only troubleshoot the corresponding SRS DTCs.
- After reading and recording the DTC, proceed with the troubleshooting procedure for that code.

Precautions

- Use only a digital multimeter to check the system. Make sure its output is 10 mA (0.01 A) or less when switched to the smallest value in the ohmmeter range. A tester with a higher output could damage the airbag circuit or cause accidental airbag deployment and possible injury.
- Whenever the ignition switch is in ON (II), or has been turned to LOCK (0) for less than 3 minutes, be careful not to bump the SRS unit; the airbags could accidentally deploy and cause damage or injuries.
- Before removing the dashboard wire harness or SRS floor wire harness, disconnect the driver's airbag connector, the front passenger's airbag connector, both side airbag connectors, both side curtain airbag connectors, and both seat belt tensioner connectors.
- Make sure the battery is fully charged. If the battery is dead or low, electrical measurements values may not be correct.
- Do not touch a tester probe to the terminals in the SRS unit or harness connectors, and do not connect the SRS unit terminals or the sensor terminals with a jumper wire. Use only the backprobe set and the multimeter. Backprobe spring-loaded lock type connectors correctly.

Reading the DTC

1. Make sure the ignition switch is in LOCK (0).
2. Connect the HDS to the data link connector (DLC) (A).

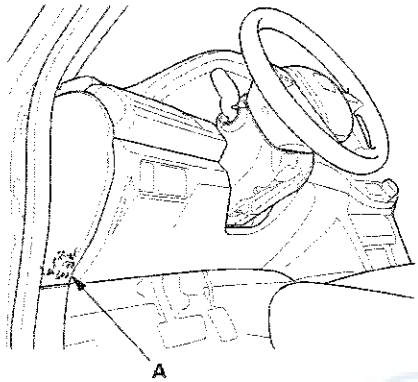

3. Turn the ignition switch to ON (II).
4. Make sure the HDS communicates with the vehicle and the SRS unit. If it does not communicate, troubleshoot the DLC circuit (see page 11-192).
5. Use the HDS to check for SRS DTCs.
6. Read and record the DTC.

   NOTE: Only read DTCs from the SRS menu, not from SWS menus unless instructed to check SWS DTCs. SWS (ODS unit) DTCs are subcodes of SRS unit DTCs. Only troubleshoot the corresponding SRS DTCs.

7. Turn the ignition switch to LOCK (0), then wait for 10 seconds.
8. Disconnect the HDS from the DLC.
9. Do the troubleshooting procedure for the DTC.

Clear the DTC Memory With the HDS

NOTE: Make sure the battery is fully charged before you begin.

1. Make sure the ignition switch is in LOCK (0).
2. Connect the HDS to the data link connector (DLC) (A).

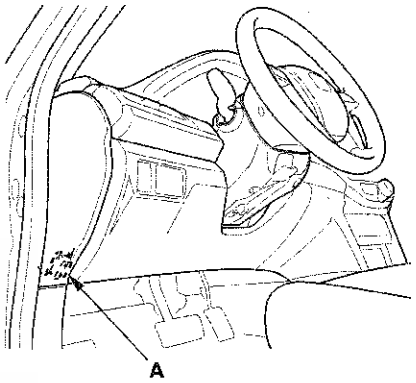

3. Turn the ignition switch to ON (II).
4. Make sure the HDS communicates with the vehicle and the SRS unit. If it does not communicate, troubleshoot the DLC circuit (see page 11-192).
5. In the SRS MENU of the HDS, select SRS, then DTC to clear DTC(s).
6. Turn the ignition switch to LOCK (0), and wait for 10 seconds.
7. Disconnect the HDS from the DLC.

(cont'd)

General Troubleshooting Information (cont'd)

Troubleshooting Intermittent Failures

If there was a malfunction that sets a DTC, but it does not recur, it will be stored in the memory as an intermittent failure, and the SRS indicator may come on depending on the malfunction detected.

NOTE:
- Check the condition of the battery (see page 22-88), and the charging system (see page 4-27). Low battery voltage may cause some intermittent failures.
- A faulty cable reel can cause intermittent connections related to the driver's airbag inflator DTCs.

After checking the DTC, troubleshoot as follows:

1. Read the DTC (see Reading the DTC).
2. Clear the DTC memory (see Clear the DTC Memory).
3. Set the parking brake, then start the engine, and let it idle.
4. The SRS indicator comes on for about 6 seconds and then goes off.
5. Shake the related wire harnesses and the connectors, and look for loose connections, poor pinfits, and poor grounds.
6. Take a test-drive (quick acceleration, quick braking, and cornering), turn the steering wheel fully left and right, and hold it there for 5 to 10 seconds. If the problem recurs, the SRS indicator will come on.
7. If you cannot duplicate the concern, ask the customer about the conditions when it occurred, or ask the customer to demonstrate the concern.
8. If you cannot duplicate the intermittent failure, the system is OK at this time.

Checking Seat Weight Sensors After a Vehicle Collision

1. Position the front passenger's seat to the rear most position, adjust the seat-back to the forward most position. Do not move the seat from this position.
2. Drive the vehicle, accelerate to 20 mph (36 km/h), then stop on level ground.
3. Make sure the ignition switch is in LOCK (0).
4. Connect the HDS to the data link connector (DLC) (A).

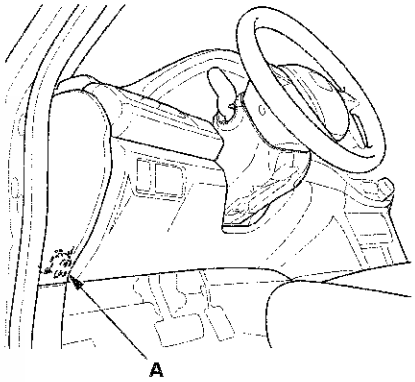

5. Turn the ignition switch to ON (II).
6. Make sure the HDS communicates with the vehicle and the SRS unit. If it does not communicate, troubleshoot the DLC circuit (see page 11-192).
7. From the SRS inspection menu, select Seat Weight Sensor, then Misc test, then SEAT OUTPUT CHK and follow the prompts until the ODS operation check has been completed.

SRS Unit Update

2-Door

Special Tools Required
- Honda diagnostic system (HDS) tablet tester
- Honda interface module (HIM) and an iN workstation with HDS and CM update software
- HDS pocket tester
- GNA600 and an iN workstation with HDS and the latest software
  Any one of the update tools above will work.

NOTE:
- Use this procedure anytime you need to update the SRS unit.
- Make sure the HDS/HIM has the latest software version.
- Before you update the SRS unit, make sure the battery in the vehicle is fully charged.
- Never turn the ignition switch to LOCK (0) or ACC (I) during the update. If there is a problem with the update, leave the ignition switch in ON (II).
- To prevent SRS unit damage, do not operate anything electrical (headlights, audio system, brakes, A/C, power windows, moonroof (if equipped), door locks, etc.) during the update.
- To ensure the latest program is installed, do an SRS unit update whenever the SRS unit is replaced.
- You cannot update an SRS unit with a program it already has. It will only accept a new program.
- If you need to diagnose the HIM because the HIM's red (#3) light came on or was flashed during the update, leave the ignition switch in the ON (II) position when you disconnect the HIM from the data link connector (DLC). This will prevent SRS unit damage.

1. Connect the HDS to the DLC (A).

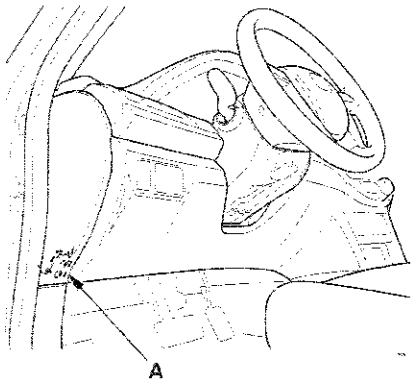

2. Turn the ignition switch to ON (II), but do not start the engine.

3. Make sure the HDS communicates with the vehicle and the SRS unit. If it does not communicate, troubleshoot the DLC circuit (see page 11-192).

4. Select the update program, and follow the screen prompts to update the SRS unit.

5. If the software in the SRS unit is the latest, disconnect the HDS/HIM from the DLC, and go back to the procedure that you were doing. If the software in the SRS unit is not the latest, follow the instructions on the screen.

   NOTE: If you run into a problem during the update procedure (programming takes over 15 minutes, status bar goes over 100 %, D or immobilizer light flashes, HDS tablet freezes, etc.), follow these steps to minimize the chance of damaging the SRS unit :

   - Leave the ignition switch in the ON (II) position.
   - Connect a jumper battery (do not connect a battery charger).
   - Shut down the HDS.
   - Disconnect the HDS from the DLC.
   - Reboot the HDS.
   - Reconnect the HDS to the DLC, and try the update procedure again.

6. Turn the ignition switch to LOCK (0).

7. Disconnect the HDS from the DLC.

ODS Unit Initialization

After a seat-back cover, seat-back cushion, and/or ODS unit is replaced, initialize the ODS unit by doing this procedure.

NOTE: A new (uninitialized) ODS unit installed with a faulty OPDS sensor can cause DTC 85-71 and DTC 85-78.

1. Clear the DTC memory (see page 24-35).
2. Make sure the front passenger's seat is dry. Set the seat-back in a normal position, and make sure there is nothing on the seat.
3. Make sure the ignition switch is in LOCK (0).
4. Connect the HDS to the data link connector (DLC) (A).

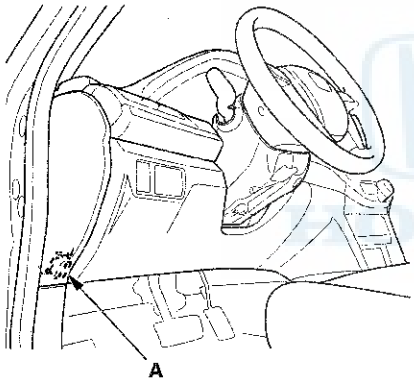

5. Turn the ignition switch to ON (II).
6. Make sure the HDS communicates with the vehicle and the SRS unit. If it does not communicate, troubleshoot the DLC circuit (see page 11-192).
7. From the HDS Main Menu, select SRS, then SRS, then Calibration. In the Calibration Menu, select ODS UNIT INITIALIZATION. Follow the screen prompts to initialize the ODS unit.
8. Turn the ignition switch to LOCK (0).
9. Disconnect the HDS from the DLC.

   NOTE: If the ODS unit fails to initialize after several attempts, replace the OPDS sensor/seat-back and retry. If the ODS unit continues to fail to initialize, replace the ODS unit (see page 24-230).

ODS Unit Calibration

When you replace the SRS unit, front passenger's weight sensors, or the ODS unit, calibrate the ODS unit.

While calibrating the ODS unit, observe these precautions:
- Make sure all components of the front passenger's seat are correctly installed.
- Make sure nothing is on or under the front passenger's seat.
- Make sure there is nothing in the front passenger's seat-back pocket.
- Keep the windows and the moonroof closed.
- Do all calibration procedures, except test-driving, in the service bay.
- Make sure the vehicle is on level ground.
- Keep the A/C and the heater off.
- Do not touch the front passenger's seat until you are prompted to or when you have completed the calibration.
- Do not expose the front passenger's seat to sudden temperature changes.

1. Position the front passenger's seat to the rearmost position, and adjust the seat-back to the most forward position. Do not move the seat from this position.
2. Connect the HDS to the data link connector (DLC) (A).

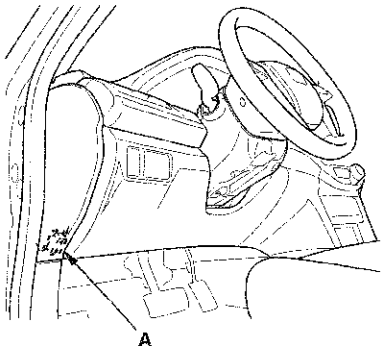

3. Make sure the HDS communicates with the vehicle and the SRS unit. If it does not communicate, troubleshoot the DLC circuit (see page 11-192).
4. Drive the vehicle, and accelerate to 20 mph (36 km/h), then stop on level ground.
5. From the Main Menu, select SRS, then Calibration, then Misc Test, then select SWS INITIALIZATION, and follow the prompts until the calibration is complete.

ODS Unit Operation Check

Check the ODS operation after any of these actions:
- Replacement of front passenger's seat component(s) (except ODS unit and/or weight sensors)
- After a vehicle collision
- SRS unit replacement

Pre-Operation Check Set-up
- Make sure all the components of the front passenger's seat are correctly installed.
- Position the front passenger's seat to the rearmost position. Adjust the seat-back to the forward most position. Do not move the seat from this position.
- Make sure nothing is on or under the front passenger's seat.
- Make sure there is nothing in the front passenger's seat-back pocket.
- Keep the windows and the moonroof closed.
- Do all calibration procedures, except test-driving, in the service bay.
- Make sure the vehicle is on level ground.
- Turn the heater and the A/C off.
- Do not touch the passenger's seat during the calibration.
- Do not expose the front passenger's seat to sudden temperature changes.
- Make sure all aftermarket devices such as amplifiers, fluorescent light, air purifiers, CB or HAM radios, etc. are turned off.

After Replacing Front Passenger's Seat Component(s)

1. Connect the HDS to the data link connector (DLC) (A).

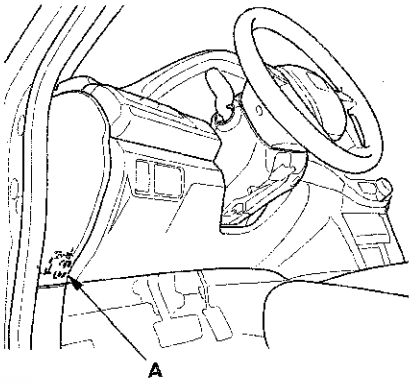

2. Make sure the HDS communicates with the vehicle and the SRS unit. If it does not communicate, troubleshoot the DLC circuit (see page 11-192).

3. Drive the vehicle, accelerate to 20 mph (36 km/h), then stop on level ground.

4. From the HDS Main Menu, select SRS, then Inspection. In the HDS Inspection Menu, select SEAT OUTPUT CHK and follow the prompts until the ODS operation check is complete.

Driver's Seat Position Sensor Operation Check

Check the driver's seat position sensor after any of these actions:
- Driver's seat position sensor replacement
- Cover plate (front side of driver's seat slide rail) replacement

1. Make sure the driver's seat is at its full forward position.
2. Make sure the ignition switch is in LOCK (0).
3. Connect the HDS to the data link connector (DLC) (A).

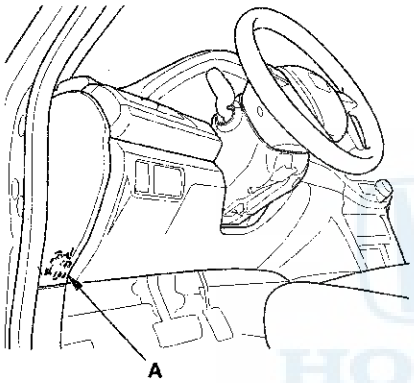

4. Turn the ignition switch to ON (II).
5. Make sure the HDS communicates with the vehicle and the SRS unit. If it does not communicate, troubleshoot the DLC circuit (see page 11-192).
6. From the HDS Main Menu, select SRS, then Parameter Information, then Buckle Switch, Seat Position Sensor.
7. Using a piece of tape (A), mark the location on the seat's outer cover (B) where the front riser cover meets the seat riser (C). The driver's seat position sensor should read NEAR.

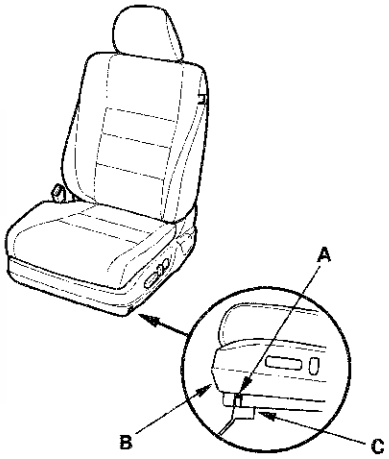

8. Move the seat back in small increments (about 0.2 in., 5 mm) until the driver's seat position sensor reads NOT NEAR. The seat should be about 25 mm (1 in.) from the front.

   NOTE: It takes a few seconds for the HDS to display changes, so wait for about 5 seconds between each move.

   If the driver's seat position sensor data does not work as described above, check the driver's seat position sensor or the cover plate for damage, and replace parts as needed.

9. Turn the ignition switch to LOCK (0), and disconnect the HDS from the DLC.

DTC Troubleshooting Index

SRS Unit DTC	Detection Item	Notes
11-1x*	Open in the driver's airbag first inflator	(see page 24-61)
11-11	Short to another airbag inflator in the driver's airbag first inflator (4-door)	(see page 24-63)
11-3x	Short to another wire or decreased resistance in the driver's airbag first inflator	(see page 24-66)
11-8x	Short to power in the driver's airbag first inflator	(see page 24-68)
11-9x	Short to ground in the driver's airbag first inflator	(see page 24-70)
11-4x*	Open in the driver's airbag second inflator	(see page 24-61)
11-41	Short to another airbag inflator in the driver's airbag second inflator (4-door)	(see page 24-65)
11-6x	Short to another wire or decreased resistance in the driver's airbag second inflator	(see page 24-66)
11-Ax	Short to power in the driver's airbag second inflator	(see page 24-68)
11-Bx	Short to ground in the driver's airbag second inflator	(see page 24-70)
12-1x*	Open in the front passenger's airbag first inflator	(see page 24-72)
12-11	Short to another airbag inflator in the front passenger's airbag first inflator (4-door)	(see page 24-73)
12-3x	Short to another wire or decreased resistance in the front passenger's airbag first inflator	(see page 24-76)
12-8x	Short to power in the front passenger's airbag first inflator	(see page 24-78)
12-9x	Short to ground in the front passenger's airbag first inflator	(see page 24-79)
12-4x*	Open in the front passenger's airbag second inflator	(see page 24-72)
12-41	Short to another airbag inflator in the front passenger's airbag second inflator (4-door)	(see page 24-74)
12-6x	Short to another wire or decreased resistance in the front passenger's airbag second inflator	(see page 24-76)
12-Ax	Short to power in the front passenger's airbag second inflator	(see page 24-78)
12-Bx	Short to ground in the front passenger's airbag second inflator	(see page 24-79)
21-1x*	Open in the driver's seat belt tensioner	(see page 24-81)
21-11	Short to another wire in the driver's seat belt tensioner (4-door)	(see page 24-82)
21-3x	Short to another wire or decreased resistance in the driver's seat belt tensioner	(see page 24-83)
21-8x	Short to power in the driver's seat belt tensioner	(see page 24-85)
21-9x	Short to ground in the driver's seat belt tensioner	(see page 24-86)
22-1x*	Open in the front passenger's seat belt tensioner	(see page 24-88)
22-11	Short to another wire in the front passenger's seat belt tensioner (4-door)	(see page 24-89)
22-3x	Short to another wire or decreased resistance in the front passenger's seat belt tensioner	(see page 24-90)
22-8x	Short to power in the front passenger's seat belt tensioner	(see page 24-92)
22-9x	Short to ground in the front passenger's seat belt tensioner	(see page 24-93)

NOTE: The "x" at the end of each DTC denotes a numeric character (0 thru 9), or items with an asterisk (*) (0, 2 thru 9), or an alpha character (A thru F) that you will see on the HDS display. The character is unrelated to your troubleshooting; it designates the SRS unit manufacturer and other detail used for product analysis.

(cont'd)

DTC Troubleshooting Index (cont'd)

SRS Unit DTC	Detection Item	Notes
31-1x*	Open in the driver's side airbag inflator	(see page 24-95)
31-11	Short to another wire in the driver's side airbag inflator (4-door)	(see page 24-96)
31-3x	Short to another wire or decreased resistance in the driver's side airbag inflator	(see page 24-97)
31-8x	Short to power in the driver's side airbag inflator	(see page 24-99)
31-9x	Short to ground in the driver's side airbag inflator	(see page 24-100)
32-1x*	Open in the front passenger's side airbag inflator	(see page 24-102)
32-11	Short to another wire in the front passenger's side airbag inflator (4-door)	(see page 24-103)
32-3x	Short to another wire or decreased resistance in the front passenger's side airbag inflator	(see page 24-104)
32-8x	Short to power in the front passenger's side airbag inflator	(see page 24-106)
32-9x	Short to ground in the front passenger's side airbag inflator	(see page 24-107)
33-1x*	Open in the left side curtain airbag inflator	(see page 24-109)
33-11	Short to another wire in the left side curtain airbag inflator (4-door)	(see page 24-110)
33-3x	Short to another wire or decreased resistance in the left side curtain airbag inflator	(see page 24-111)
33-8x	Short to power in the left side curtain airbag inflator	(see page 24-113)
33-9x	Short to ground in the left side curtain airbag inflator	(see page 24-114)
34-1x*	Open in the right side curtain airbag inflator	(see page 24-116)
34-11	Short to another wire in the right side curtain airbag inflator (4-door)	(see page 24-117)
34-3x	Short to another wire or decreased resistance in the right side curtain airbag inflator	(see page 24-118)
34-8x	Short to power in the right side curtain airbag inflator	(see page 24-120)
34-9x	Short to ground in the right side curtain airbag inflator	(see page 24-121)
41-1x	No signal from the left front impact sensor	(see page 24-123)
41-2x	Internal failure of the left front impact sensor	(see page 24-127)
41-3x		
41-8x		
41-9x		
41-Ax		
41-Bx		
42-1x	No signal from the right front impact sensor	(see page 24-125)
42-2x	Internal failure of the right front impact sensor	(see page 24-127)
42-3x		
42-8x		
42-9x		
42-Ax		
42-Bx		

SRS Unit DTC	Detection Item	Notes
43-1x	No signal from the left side impact sensor (first) (4-door)	(see page 24-128)
43-1x	No signal from the left side impact sensor (first) (2-door)	(see page 24-132)
43-2x	Internal failure of the left side impact sensor (first)	(see page 24-136)
43-3x		
43-8x		
43-9x		
43-Ax		
43-Bx		
44-1x	No signal from the right side impact sensor (first) (4-door)	(see page 24-130)
44-1x	No signal from the right side impact sensor (first) (2-door)	(see page 24-134)
44-2x	Internal failure of the right side impact sensor (first)	(see page 24-136)
44-3x		
44-8x		
44-9x		
44-Ax		
44-Bx		
45-1x	No signal from the left side impact sensor (second) (4-door)	(see page 24-137)
45-1x	No signal from the left side impact sensor (second) (2-door)	(see page 24-141)
45-2x	Internal failure of the left side impact sensor (second)	(see page 24-145)
45-3x		
45-8x		
45-9x		
45-Ax		
45-Bx		
46-1x	No signal from the right side impact sensor (second) (4-door)	(see page 24-139)
46-1x	No signal from the right side impact sensor (second) (2-door)	(see page 24-143)
46-2x	Internal failure of the right side impact sensor (second)	(see page 24-145)
46-3x		
46-8x		
46-9x		
46-Ax		
46-Bx		

NOTE: The "x" at the end of each DTC denotes a numeric character (0 thru 9), or items with an asterisk (*) (0, 2 thru 9), or an alpha character (A thru F) that you will see on the HDS display. The character is unrelated to your troubleshooting; it designates the SRS unit manufacturer and other detail used for product analysis.

(cont'd)

DTC Troubleshooting Index (cont'd)

SRS Unit DTC	Detection Item	Notes
B2-1x	No signal from the rear safing sensor (4-door)	(see page 24-146)
B2-1x	No signal from the rear safing sensor (2-door)	(see page 24-148)
B2-2x	Internal failure of the rear safing sensor	(see page 24-150)
B2-3x		
B2-8x		
B2-9x		
B2-Ax		
B2-Bx		
51-xx	Internal failure of the SRS unit	(see page 24-151)
52-xx		
53-xx		
54-xx		
55-xx		
57-xx		
58-xx		
53-FF	SRS unit programming error	(see page 24-152)
Ex-11	Control operation recorded	(see page 24-150)
Fx-11	Airbags and/or tensioners deployment recorded	(see page 24-151)
56-25	Lost communication with the gauge control module	(see page 24-154)
56-31	Lost communication with the ECM/PCM (PGM-FI system)	(see page 24-152)
56-32	Undefined data received from the ECM/PCM (PGM-FI system)	(see page 24-153)
56-33		
61-1x	Open in the driver's seat belt buckle switch	(see page 24-155)
61-2x	Short in the driver's seat belt buckle switch	(see page 24-156)
62-1x	Open in the front passenger's seat belt buckle switch	(see page 24-157)
62-2x	Short in the front passenger's seat belt buckle switch	(see page 24-159)
71-1x	Open in the driver's seat position sensor	(see page 24-160)
71-2x	Short in the driver's seat position sensor	(see page 24-161)
81-4x	Internal the failure of the ODS unit	(see page 24-163)
81-5x		
81-63		
81-64		
81-61	No signal from the ODS unit	
81-62	Non-stipulated data from the ODS unit	
81-17	ODS unit not calibrated	(see page 24-166)
81-78		
81-79	Front passenger's weight sensors initial check failure	(see page 24-167)

SRS Unit DTC	Detection Item	Notes
82-1x	No signal from the inner side front passenger's weight sensor (2-door)	(see page 24-168)
83-2x	No signal from the outer side front passenger's weight sensor (2-door)	
82-14	No signal from the front passenger's weight sensor (front inner side) (4-door)	(see page 24-169)
82-16	No signal from the front passenger's weight sensor (rear inner side) (4-door)	(see page 24-172)
83-24	No signal from the front passenger's weight sensor (front outer side) (4-door)	(see page 24-176)
83-26	No signal from the front passenger's weight sensor (rear outer side) (4-door)	(see page 24-179)
82-15	Internal failure of the front passenger's weight sensor (front inner side) (4-door)	(see page 24-183)
82-17	Internal failure of the front passenger's weight sensor (rear inner side) (4-door)	
83-25	Internal failure of the front passenger's weight sensor (front outer side) (4-door)	
83-27	Internal failure of the front passenger's weight sensor (rear outer side) (4-door)	
85-4x	Internal failure of the ODS unit	
85-5x		
85-63		
85-64		
85-61	No signal from the ODS unit	(see page 24-184)
85-62	Non-stipulated data from the ODS unit	
85-71	ODS unit not initialized	(see page 24-166)
85-78		
85-79	OPDS initial check failure	(see page 24-187)
86-1x	Faulty OPDS seat-back sensor	(see page 24-188)
86-2x	Faulty OPDS seat support sensor	
92-1x	Short to power in the passenger's airbag cutoff indicator	(see page 24-189)
92-2x	Open or short to ground in the passenger's airbag cutoff indicator	(see page 24-190)
A1-1x	Faulty power supply (VA line)	(see page 24-191)
A2-1x	Faulty power supply (VB line)	(see page 24-192)
A3-1x	SRS connector A not properly installed	(see page 24-193)
A4-1x	SRS connector B not properly installed	(see page 24-194)

NOTE: The "x" at the end of each DTC denotes a numeric character (0 thru 9) or an alpha character (A thru F) that you will see on the HDS display. The character is unrelated to your troubleshooting; it designates the SRS unit manufacturer and other detail used for product analysis.

(cont'd)

DTC Troubleshooting Index (cont'd)

Only read DTCs from the SRS menu, not from SWS menus unless instructed to check SWS DTCs. SWS (ODS unit) DTCs are subcodes of SRS unit DTCs. Only troubleshoot the corresponding SRS DTCs.

SWS DTC Index

SRS Unit DTC	SWS DTC	Detection Item	Notes
81-4x	41-xx	Internal failure of the ODS unit	(see page 24-195)
	42-xx		
	43-xx		
82-14	14-11	Short to power in the front passenger's weight sensor (front inner side) power circuit	(see page 24-196)
	14-12	Short to ground in the front passenger's weight sensor (front inner side) power circuit	
	14-13	Open in the front passenger's weight sensor (front inner side) output circuit	
	14-14	Short to ground in the front passenger's weight sensor (front inner side) output circuit	
82-15	15-3x	Internal failure of the front passenger's weight sensor (front inner side)	(see page 24-198)
82-16	16-11	Short to power in the front passenger's weight sensor (rear inner side) power circuit	(see page 24-196)
	16-12	Short to ground in the front passenger's weight sensor (rear inner side) power circuit	
	16-13	Open in the front passenger's weight sensor (rear inner side) output circuit	
	16-14	Short to ground in the front passenger's weight sensor (rear inner side) output circuit	
82-17	17-3x	Internal failure of the front passenger's weight sensor (rear inner side)	(see page 24-198)
83-24	24-11	Short to power in the front passenger's weight sensor (front outer side) power circuit	(see page 24-197)
	24-12	Short to ground in the front passenger's weight sensor (front outer side) power circuit	
	24-13	Open in the front passenger's weight sensor (front outer side) output circuit	
	24-14	Short to ground in the front passenger's weight sensor (front outer side) output circuit	
83-25	25-3x	Internal failure of the front passenger's weight sensor (front outer side)	(see page 24-198)
83-26	26-11	Short to power in the front passenger's weight sensor (rear outer side) power circuit	(see page 24-197)
	26-12	Short to ground in the front passenger's weight sensor (rear outer side) power circuit	
	26-13	Open in the front passenger's weight sensor (rear outer side) output circuit	
	26-14	Short to ground in the front passenger's weight sensor (rear outer side) output circuit	
83-27	27-3x	Internal failure of the front passenger's weight sensor (rear outer side)	(see page 24-198)
81-71	71-xx	QDS unit not calibrated	(see page 24-195)

NOTE: The "x" at the end of each DTC denotes a numeric character (0 thru 9) or an alpha character (A thru F) that you will see on the HDS display. The character is unrelated to your troubleshooting; it designates the SRS unit manufacturer and other detail used for product analysis.

Symptom Troubleshooting Index

Symptom	Diagnostic procedure	Also check for
SRS indicator does not come on	Symptom Troubleshooting (see page 24-198)	Communication with the HDS
SRS indicator stays on, but no DTCs are stored	Symptom Troubleshooting (see page 24-199)	• Charging system for under or overcharging • Communication with the HDS
Side airbag cutoff indicator is flashing	Check for DTCs. If any DTC is indicated, go to the DTC troubleshooting	• ODS Initialization • Communication with the HDS
Side airbag cutoff indicator stays on	Symptom Troubleshooting (see page 24-200)	Communication with the HDS
Side airbag cutoff indicator does not come on	Symptom Troubleshooting (see page 24-200)	• ODS Initialization • Communication with the HDS
Passenger's airbag cutoff indicator is flashing	Check for DTCs. If any DTC is indicated, go to the DTC troubleshooting	• Communication with the HDS • Initialize the ODS unit
Passenger's airbag cutoff indicator stays on or comes on suddenly	Symptom Troubleshooting (see page 24-201)	Communication with the HDS
Passenger's airbag cutoff indicator does not come on	Check for DTCs. If any DTC is indicated, go to the DTC troubleshooting	Communication with the HDS
HDS does not communicate with the SRS unit or the vehicle	Troubleshoot the DLC circuit (see page 11-192)	Communication with the HDS

HONDA

System Description

SRS Components

Airbags
The SRS is a safety device which, when used with the seat belt, is designed to help protect the driver and front passenger in a frontal impact exceeding a certain set limit. The system consists of the SRS unit, including safing sensor and impact sensor (A), the cable reel (B), the driver's airbag (C), the front passenger's airbag (D), side airbags (E), side curtain airbags (F), seat belt tensioners (G), side impact sensors (first) (H), front impact sensors (I), rear safing sensor (J), and side impact sensors (second) (K).
Since the driver's and front passenger's airbags use the same sensors, both normally inflate at the same time. However, it is possible for only one airbag to inflate. This can occur when collision severity is near the threshold for airbag deployment. In such case, the SRS system will only deploy airbags when the protection provided by the seat belt is insufficient.

Front Passenger's Weight Sensors
The front passenger's weight sensors (L) are part of seat base. The front passenger's weight sensors detect the weight on the seat, and send the information to the ODS unit (M). If the total weight is about 65 lbs (30 kg) or less, the ODS unit sends a signal to the SRS unit to prevent the passenger's airbag from deploying. When the passenger's airbag is disabled, the passenger airbag cutoff indicator on the center panel comes on to alert the driver that the front passenger's airbag will not deploy in a front-end collision.

Driver's Seat Position Sensor
The driver's seat position sensor (N) is under the driver's seat on the left side. When the driver's seat is moved to its full forward position, the deployment of the driver's airbag is moderated to decrease its force of impact during a front-end collision.

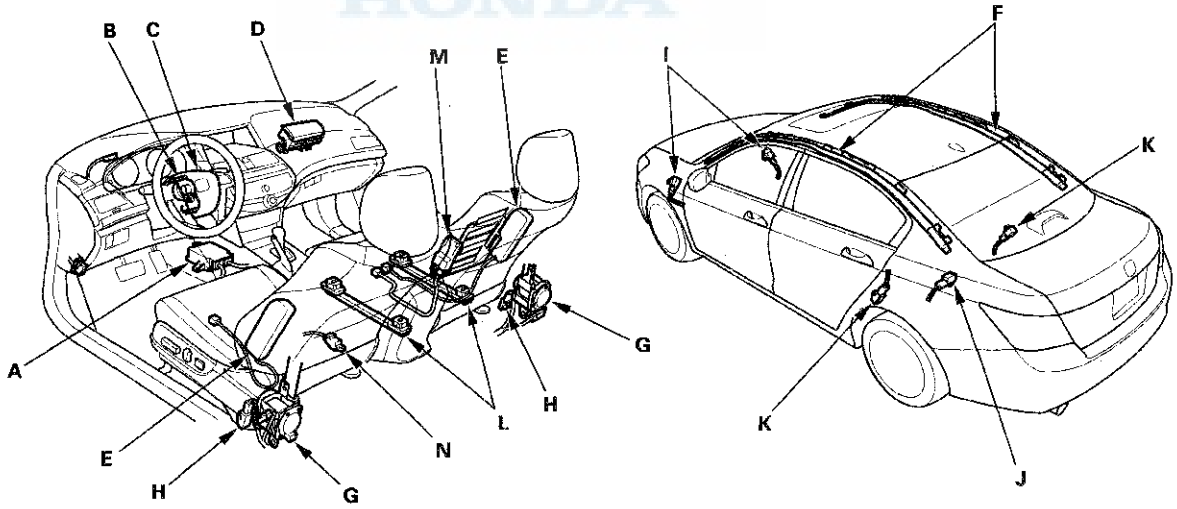

4-door shown; 2-door is similar.

Rear Safing Sensor
The rear safing sensor is located under the rear seat cushion. The rear safing sensor performs the same basic function as the safing sensor in the SRS unit. It measures sideways G force, such as the force the vehicle would receive in a side collision in the rear, and sends that information to the SRS unit. The SRS unit uses that information, and the information from the second side impact sensors to determine the side that is impacted and the force. If the threshold is met, the SRS unit deploys the side airbag, the side curtain airbag and the seat belt tensioner on that side.

Side Airbag Cutoff Indicator/ODS Operation
The indicator comes on when the front passenger's seat is occupied by a small adult or child who is leaning into the deployment path, or when an object (grocery bag, briefcase, purse, etc.) is in the seat. This indicates the passenger's side airbag is off and will not deploy; there is no problem with the side airbag. If the passenger sits upright or moves to another seat, or you remove the object from the seat, the light should go off. There will be some delay between the occupant's repositioning, and when the indicator will turn on or off.

Passenger's Airbag Cutoff Indicator
The indicator comes on if the weight of the front passenger is about 65 lbs (30 kg) or less. This indicates the passenger's front airbag is off and will not deploy. The front airbag is shut off to reduce the chance of airbag-caused injuries.

SRS Operation
The main circuit in the SRS unit senses and analyzes the force of impact and, if necessary, ignites the inflator charges. If battery voltage is too low or power is disconnected due to the impact, the voltage regulator and the back-up power circuit will keep voltage at a constant level.

For the SRS to operate

Seat Belt Tensioners
(1) A front impact sensor, side impact sensor, or the rear safing sensor must activate and send electric signals to the microprocessor.
(2) The microprocessor must compute the signals and trigger the tensioners.
(3) The charges must ignite and deploy the tensioners.

Driver's and Front Passenger's Airbag(s)
(1) A front impact sensor must activate, and send electric signals to the microprocessor.
(2) The microprocessor must compute the signals, and trigger the airbag inflator(s).
(3) The triggered inflators that received signals must ignite and deploy the airbags.

Side Airbag(s)
(1) A side impact sensor must activate, and send electric signals to the microprocessor.
(2) The microprocessor must compute the signals and trigger the side airbag inflator(s). However, the microprocessor does not trigger the front passenger's side airbag if the SRS unit determines that the front passenger's head is in the deployment path of the side airbag.
(3) The triggered inflators the signal must ignite and deploy the side airbags.

Side Curtain Airbag(s)
(1) A side impact sensor or the rear safing sensor must activate and send electrical signals to the microprocessor.
(2) The microprocessor must compute the signals and trigger the side curtain airbag and side airbag inflator(s).
(3) The triggered inflators that must ignite and deploy the side curtain airbag and side airbag at the same time.

(cont'd)

System Description (cont'd)

4-Door

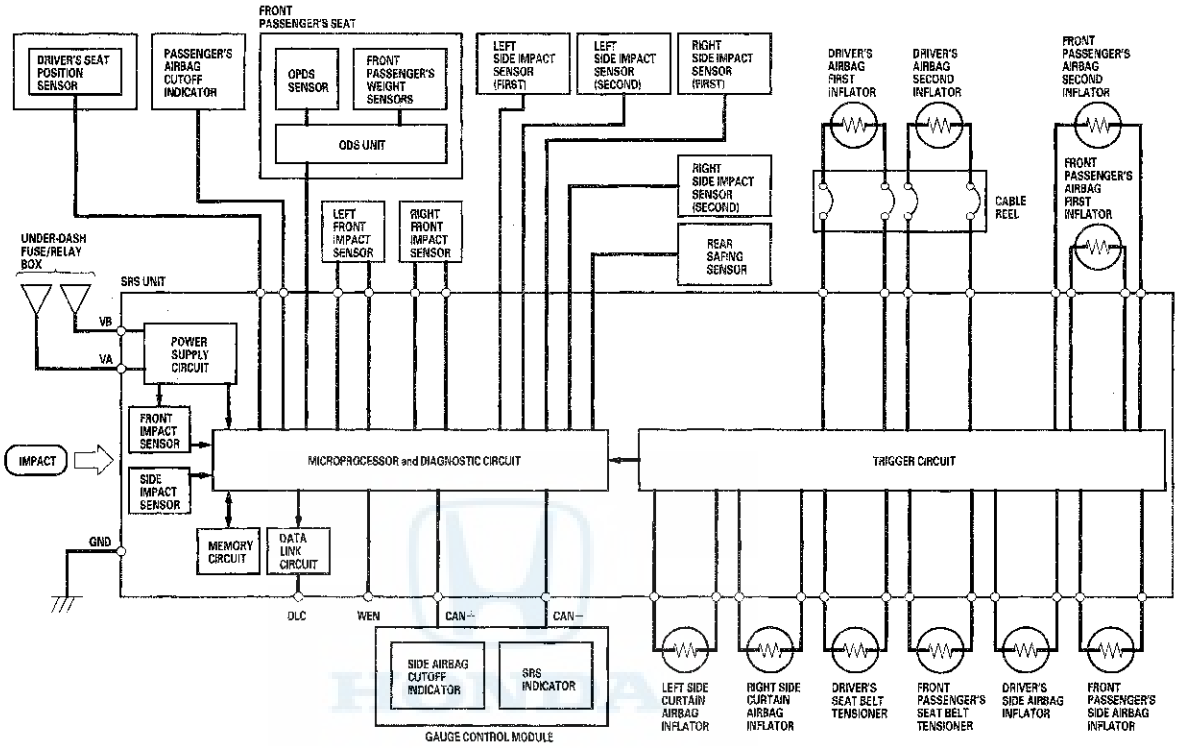

Self-diagnostic System

A self-diagnostic circuit is built into the SRS unit; when the ignition switch is turned to ON (II), the SRS indicator comes on and goes off after about 6 seconds if the system is operating normally. If the indicator does not come on, or does not go off after 6 seconds, or comes on while driving, it indicates an abnormality in the system. The system must be inspected and repaired as soon as possible.

For better serviceability, the SRS unit memory stores a DTCs related to the cause of the malfunction, and the unit is connected to the data link connector (DLC). This information can be read with the HDS when it is connected to the DLC (see page 24-34).

NOTE: Before you disconnect the negative cable from the battery for troubleshooting, review Battery Terminal Disconnection and Reconnection (see page 22-89).

2-Door

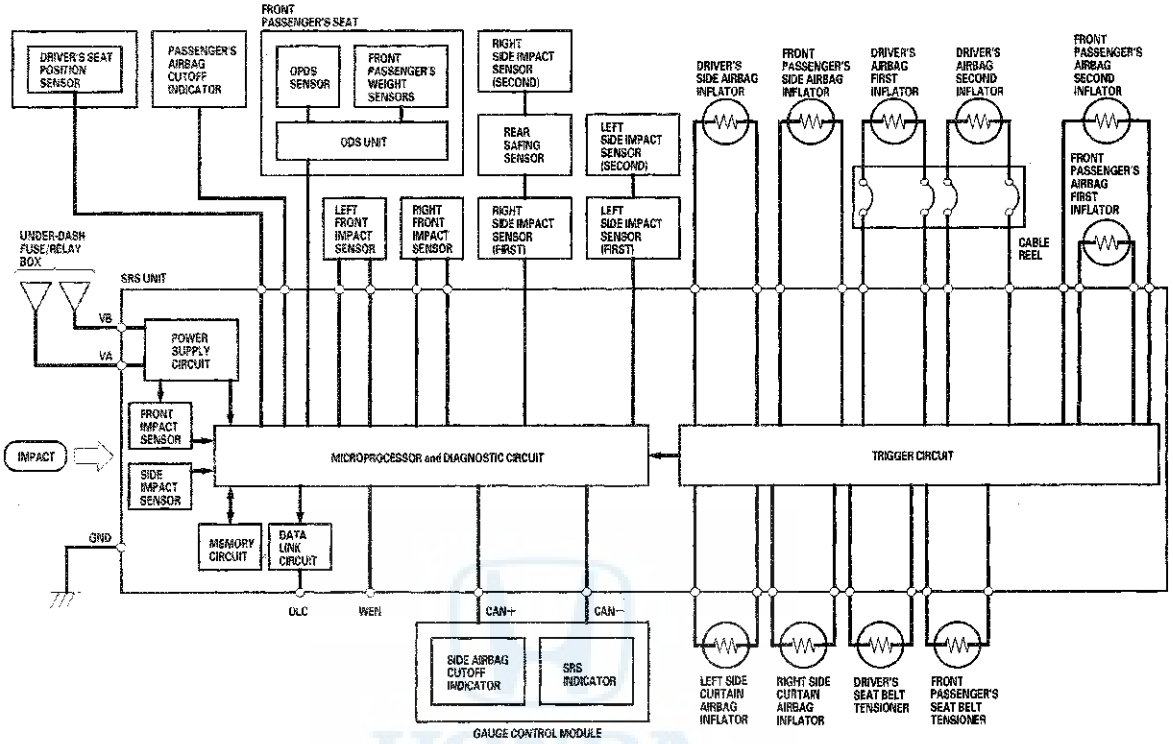
FRONT PASSENGER'S SEAT
DRIVER'S SEAT POSITION SENSOR
PASSENGER'S AIRBAG CUTOFF INDICATOR
ODS SENSOR
FRONT PASSENGER'S WEIGHT SENSORS
ODS UNIT
RIGHT SIDE IMPACT SENSOR (SECOND)
REAR SAFING SENSOR
LEFT SIDE IMPACT SENSOR (SECOND)
LEFT FRONT IMPACT SENSOR
RIGHT FRONT IMPACT SENSOR
RIGHT SIDE IMPACT SENSOR (FIRST)
LEFT SIDE IMPACT SENSOR (FIRST)
DRIVER'S SIDE AIRBAG INFLATOR
FRONT PASSENGER'S SIDE AIRBAG INFLATOR
DRIVER'S AIRBAG FIRST INFLATOR
DRIVER'S AIRBAG SECOND INFLATOR
FRONT PASSENGER'S AIRBAG SECOND INFLATOR
FRONT PASSENGER'S AIRBAG FIRST INFLATOR
CABLE REEL
UNDER-DASH FUSE/RELAY BOX
SRS UNIT
VB
VA
POWER SUPPLY CIRCUIT
FRONT IMPACT SENSOR
IMPACT
SIDE IMPACT SENSOR
MICROPROCESSOR and DIAGNOSTIC CIRCUIT
TRIGGER CIRCUIT
GND
MEMORY CIRCUIT
DATA LINK CIRCUIT
DLC
WEN
CAN+
CAN−
SIDE AIRBAG CUTOFF INDICATOR
SRS INDICATOR
GAUGE CONTROL MODULE
LEFT SIDE CURTAIN AIRBAG INFLATOR
RIGHT SIDE CURTAIN AIRBAG INFLATOR
DRIVER'S SEAT BELT TENSIONER
FRONT PASSENGER'S SEAT BELT TENSIONER

(cont'd)

System Description (cont'd)

SRS Unit Inputs and Outputs at Connector A (39P)

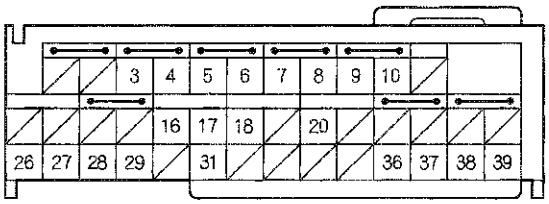

Wire side of female terminals

Terminal Number	Wire Color	Terminal Name	Description
3	BRN*	LA1−	Ground for the driver's airbag first inflator
4	LT BLU*	LA1+	Power source for the driver's airbag first inflator
5	BLU*	RA1−	Ground for the front passenger's airbag first inflator
6	YEL*	RA1+	Power source for the front passenger's airbag first inflator
7	PUR*	LA2−	Ground for the driver's airbag second inflator
8	GRN*	LA2+	Power source for the driver's airbag second inflator
9	LT BLU*	RA2−	Ground for the front passenger's airbag second inflator
10	LT GRN*	RA2+	Power source for the front passenger's airbag second inflator
16	RED*	CAN LO	Sends and receives communication signal from the gauge control module
17	WHT*	CAN HI	Sends and receives communication signal from the gauge control module
18	LT BLU*	K-LINE	Sends and receives scan tool signal (serial data)
20	BLU*	PTT	Passenger's airbag cutoff indicator output line
26	YEL*	VA	SRS system sub power (common with ODS)
27	RED*	VB	SRS dedicated power (dedicated booster circuit)
28	BLK*	SRS GND 1	Ground circuit for the SRS unit (G504)
29	BLK*	SRS GND 2	Ground circuit for the SRS unit (G504)
31	RED*	WEN	Data link connector
36	BRN*	LFS−	Ground for the left front impact sensor
37	RED*	LFS+	Power source for the left front impact sensor
38	LT BLU*	RFS−	Ground for the right front impact sensor
39	GRN*	RFS+	Power source for the right front impact sensor

* : Wire colors may be substituted in this table.

SRS Unit Inputs and Outputs at Connector B (39P)

4-Door

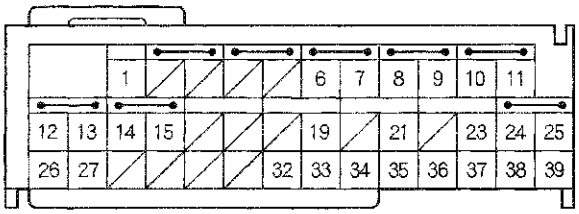

Wire side of female terminals

Terminal Number	Wire Color	Terminal Name	Description
1	ORN*	ODS	Sends and receives communication signal with the ODS unit
6	LT BLU*	LSA−	Ground for the driver's side airbag inflator
7	YEL*	LSA+	Power source for the driver's side airbag inflator
8	GRN*	RSA−	Ground for the front passenger's side airbag inflator
9	PUR*	RSA+	Power source for the front passenger's side airbag inflator
10	BLU*	LCA1−	Ground for the left side curtain airbag inflator
11	BRN*	LCA1+	Power source for the left side curtain airbag inflator
12	WHT*	LRP−	Ground for the driver's seat belt tensioner
13	BLU*	LRP+	Power source for the driver's seat belt tensioner
14	GRY*	RRP−	Ground for the front passenger's seat belt tensioner
15	PNK*	RRP+	Power source for the front passenger's seat belt tensioner
19	PNK*	FLBC	Driver's seat belt buckle switch
21	WHT*	FRBC	Front passenger's seat belt buckle switch
23	PNK*	SS+	Driver's seat position sensor
24	RED*	RCA1−	Ground for the right side curtain airbag inflator
25	GRN*	RCA1+	Power source for right side curtain airbag inflator
26	BRN*	SSS−	Ground for the rear safing sensor
27	RED*	SSS+	Power source for the rear safing sensor
32	ORN*	LSI2−	Ground for the left side impact sensor (second)
33	RED*	LSI2+	Power source for the left side impact sensor (second)
34	PUR*	RSI2−	Ground for the right side impact sensor (second)
35	LT GRN*	RSI2+	Power source for the right side impact sensor (second)
36	BRN*	LBS1−	Ground for the left side impact sensor (first)
37	GRY*	LBS1+	Power source for the left side impact sensor (first)
38	ORN*	RBS1−	Ground for the right side impact sensor (first)
39	BLU*	RBS1+	Power source for the right side impact sensor (first)

* : Wire colors may be substituted in this table.

(cont'd)

System Description (cont'd)

SRS Unit Inputs and Outputs at Connector B (39P)

2-Door

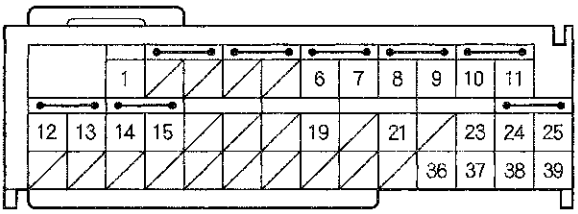

Wire side of female terminals

Terminal Number	Wire Color	Terminal Name	Description
1	ORN*	ODS	Sends and receives communication signal with the ODS unit
6	LT BLU*	LSA−	Ground for the driver's side airbag inflator
7	YEL*	LSA+	Power source for the driver's side airbag inflator
8	GRN*	RSA−	Ground for the front passenger's side airbag inflator
9	PUR*	RSA+	Power source for the front passenger's side airbag inflator
10	BLU*	LCA1−	Ground for the left side curtain airbag inflator
11	BRN*	LCA1+	Power source for the left side curtain airbag inflator
12	WHT*	LRP−	Ground for the driver's seat belt tensioner
13	BLU*	LRP+	Power source for the driver's seat belt tensioner
14	GRY*	RRP−	Ground for the front passenger's seat belt tensioner
15	PNK*	RRP+	Power source for the front passenger's seat belt tensioner
19	PNK*	FLBC	Driver's seat belt buckle switch
21	WHT*	FRBC	Front passenger's seat belt buckle switch
23	PNK*	SS+	Driver's seat position sensor
24	RED*	RCA1−	Ground for the right side curtain airbag inflator
25	GRN*	RCA1+	Power source for the right side curtain airbag inflator
36	BRN*	LBS1−	Ground for the left side impact sensor (first), left side impact sensor (second)
37	GRY*	LBS1+	Power source for the left side impact sensor (first), left side impact sensor (second)
38	ORN*	RBS1−	Ground for the right side impact sensor (first), rear sating sensor, right side impact sensor (second)
39	BLU*	RBS1+	Power source for the right side impact sensor (first), rear sating sensor, right side impact sensor (second)

* : Wire colors may be substituted in this table.

Circuit Diagram

4-Door

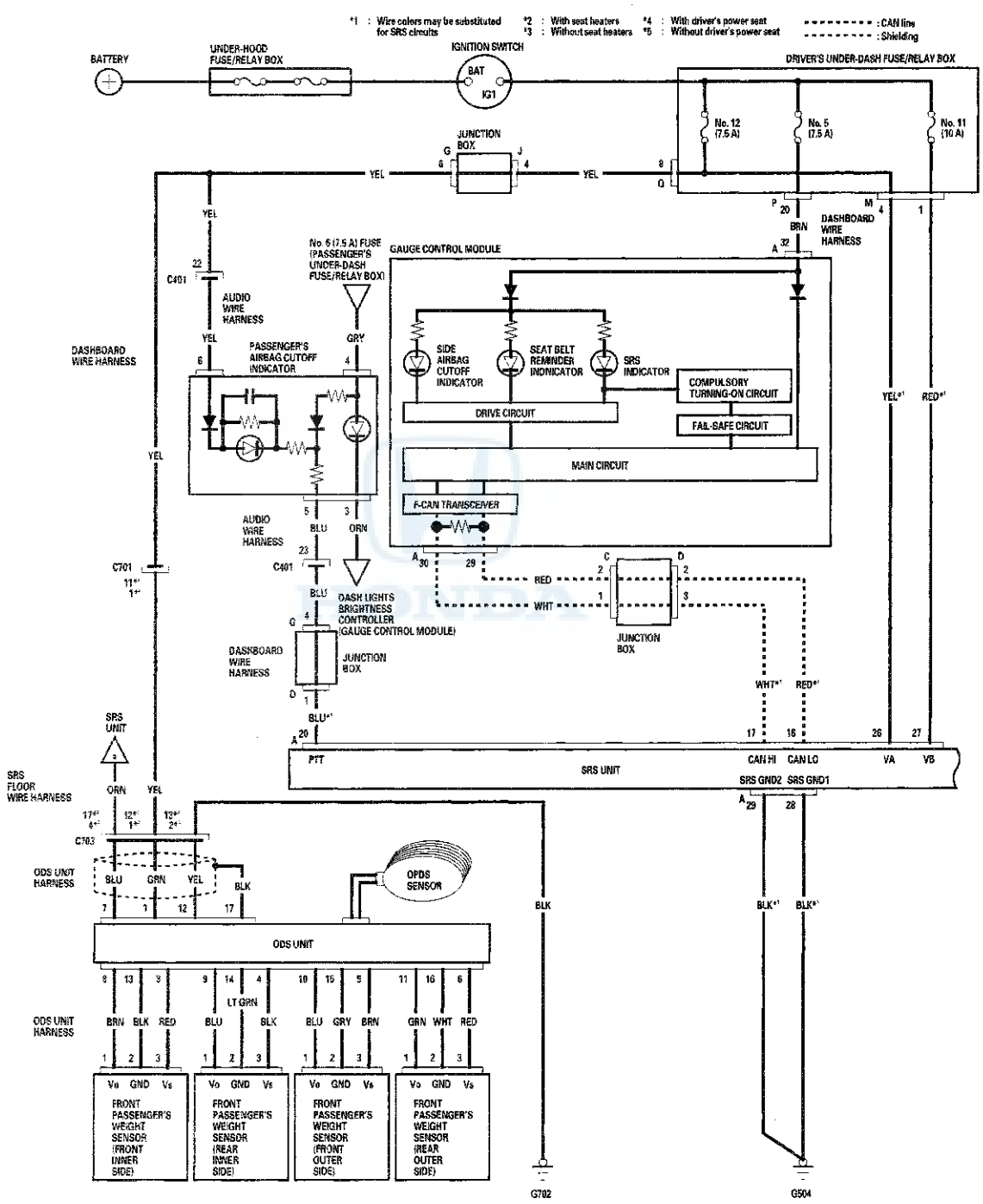

(cont'd)

Circuit Diagram (cont'd)

4-Door

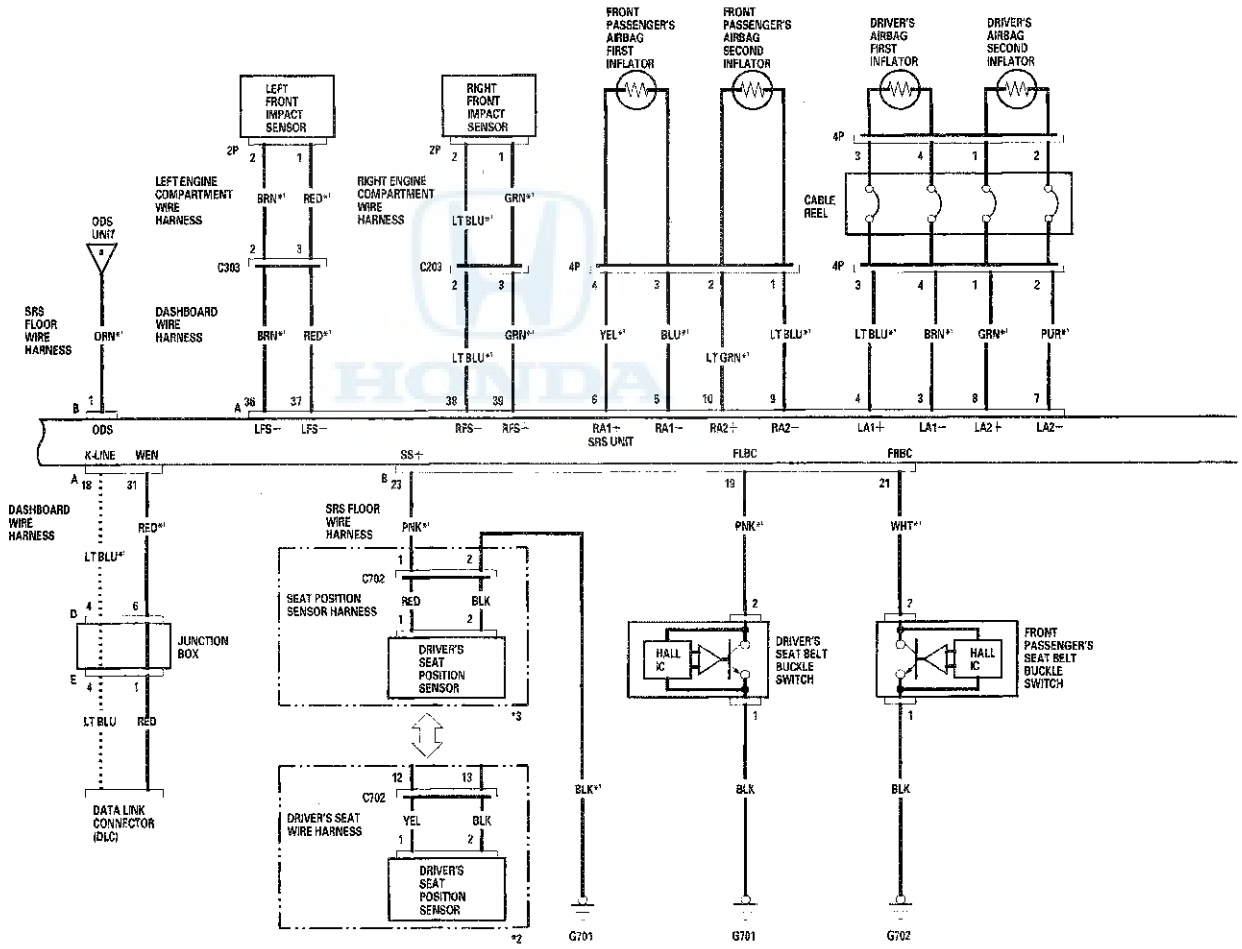

*1 : Wire colors may be substituted for SRS circuits
*2 : With driver's power seat
*3 : Without driver's power seat
- - - - - - - - - - - - : Other communication line

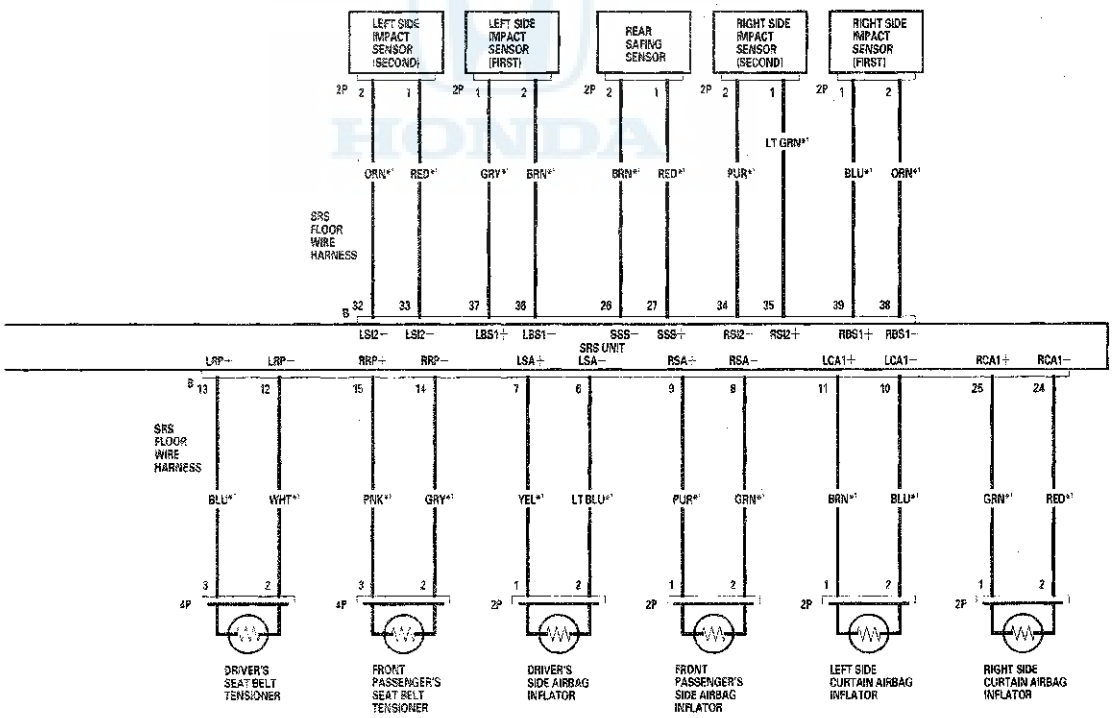

Circuit Diagram (cont'd)

2-Door

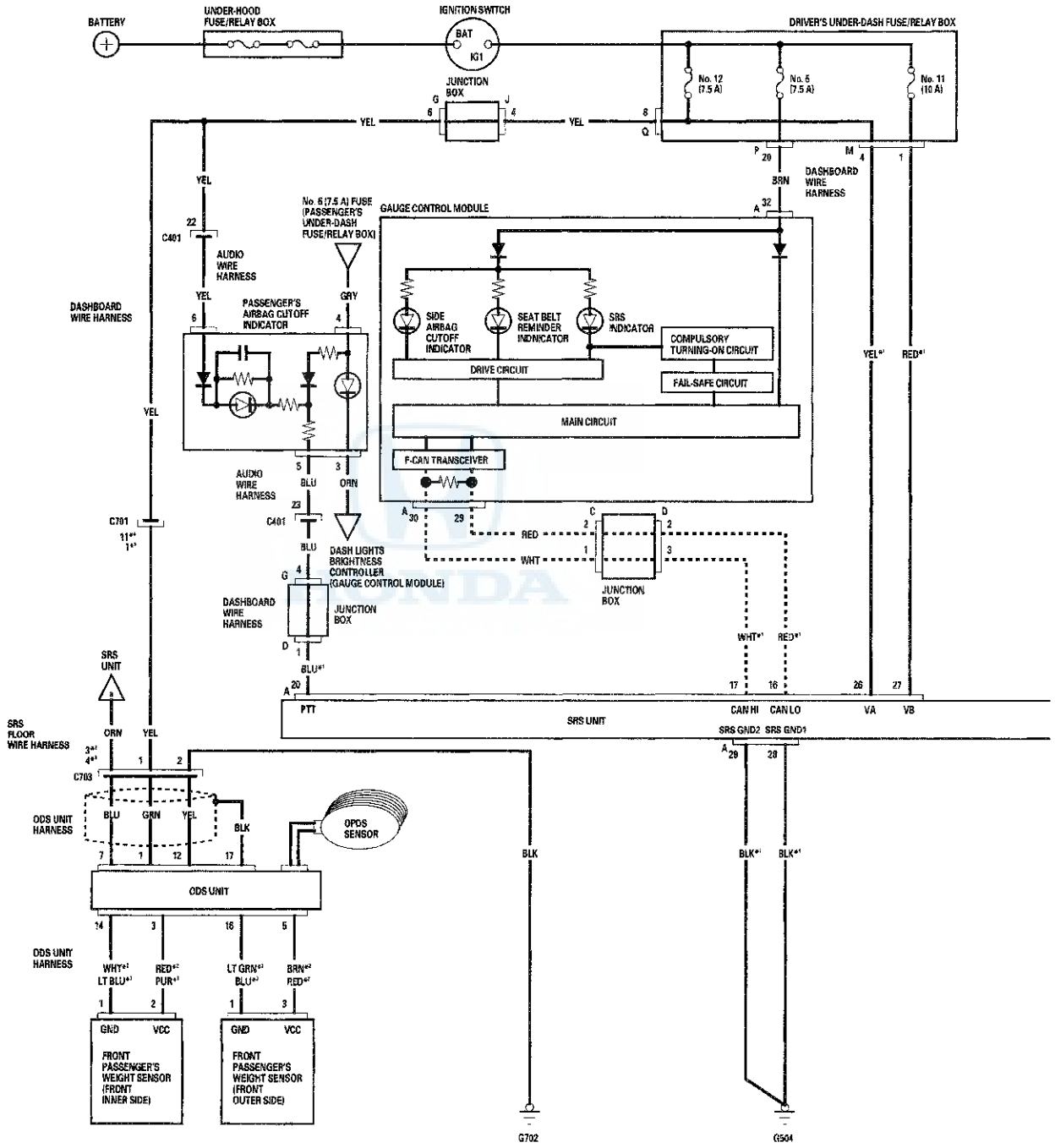

*1 : Wire colors may be substituted for SRS circuits
*2 : With seat heaters
*3 : Without seat heaters
*4 : With driver's power seat
*5 : Without driver's power seat

- - - - - - - - - : CAN line
· · · · · · · · · · · · : Other communication line
- - - - - - - - - : Shielding

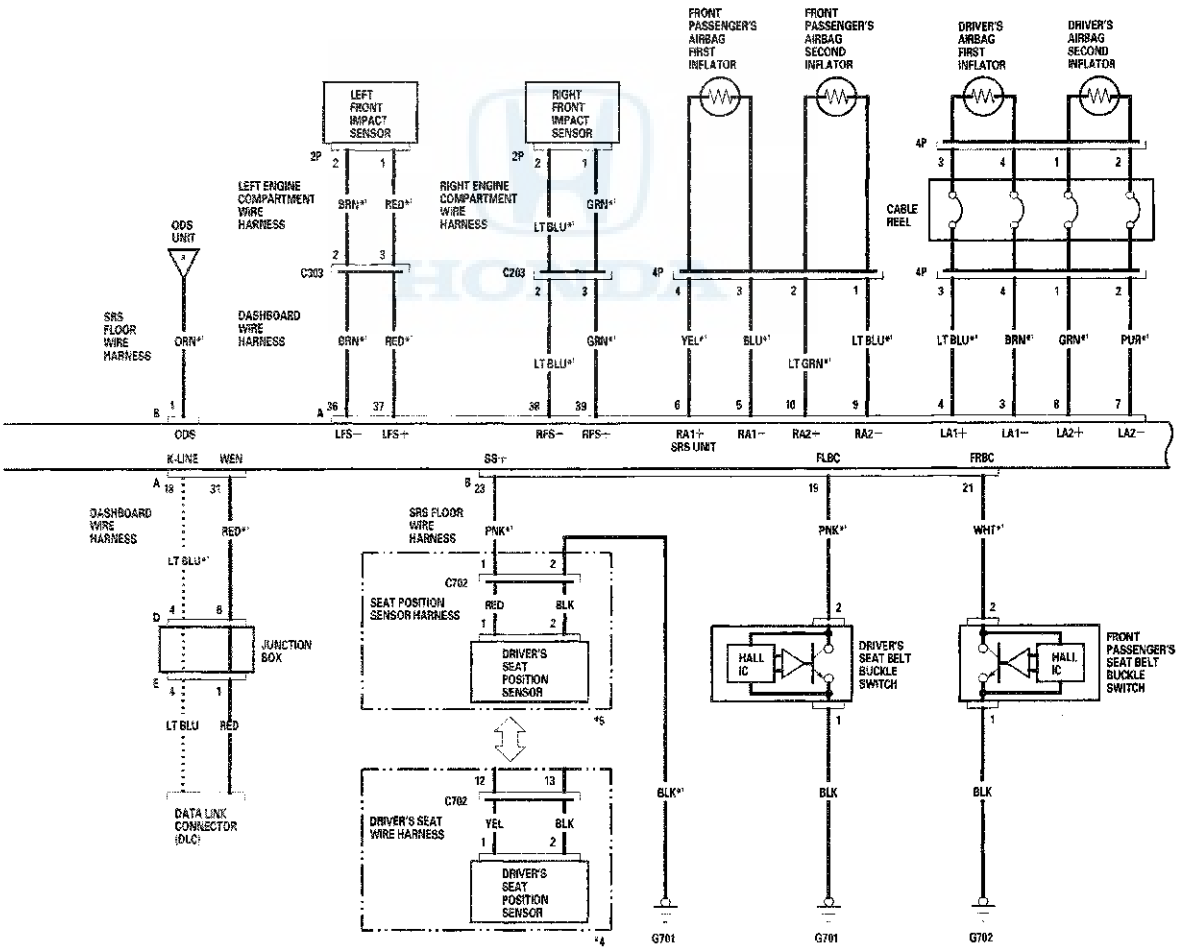

(cont'd)

Circuit Diagram (cont'd)

2-Door

* : Wire colors may be substituted for SRS circuits

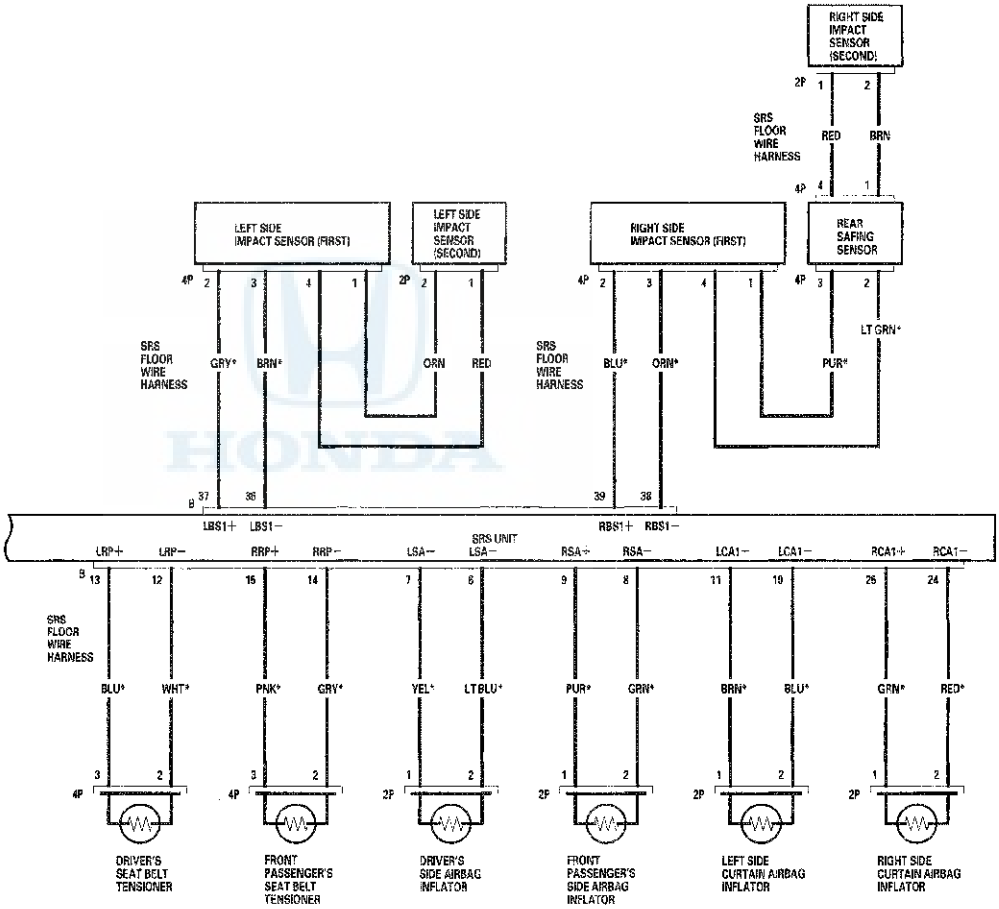

DTC Troubleshooting

DTC 11-1x ("x" can be 0, 2 thru 9 or A thru F): Open in the Driver's Airbag First Inflator

DTC 11-4x ("x" can be 0, 2 thru 9 or A thru F): Open in the Driver's Airbag Second Inflator

Special Tools Required
- SRS inflator simulator 07SAZ-TB4011A
- SRS simulator lead J 070AZ-SNAA100

NOTE:
- Before doing this troubleshooting procedure, review SRS Precautions and Procedures (see page 24-23), General Troubleshooting Information (see page 24-34), and Battery Terminal Disconnection and Reconnection (see page 22-89).
- 2-door: Before replacing the SRS unit, check the SRS unit software version with the HDS. If the software version is not the latest, update the SRS unit software (see page 24-37) and retest.

1. Clear the DTC memory (see page 24-35).

2. Turn the ignition switch to ON (II), and check that the SRS indicator comes on for about 6 seconds and then goes off.

   Does the SRS indicator stay on, and is DTC 11-1x or 11-4x indicated?

   YES—Go to step 3.

   NO—Intermittent failure, the system is OK at this time. Go to Troubleshooting Intermittent Failures (see page 24-36). If another DTC is indicated, troubleshoot the DTC.

3. Turn the ignition switch to LOCK (0). Disconnect the negative cable from the battery, then wait at least 3 minutes.

4. Disconnect the driver's airbag 4P connector (A) from the cable reel.

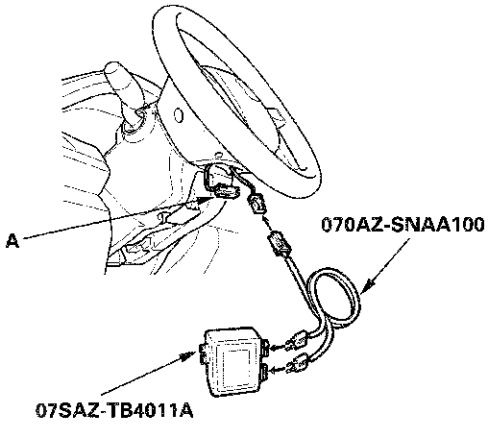

5. Connect the SRS inflator simulator (2 Ω connectors) and simulator lead J to the cable reel.

6. Reconnect the negative cable to the battery.

7. Clear the DTC memory.

8. Read the DTC (see page 24-35).

   Is DTC 11-1x or 11-4x indicated?

   YES—Go to step 9.

   NO—Open in the driver's airbag first or second inflator; replace the driver's airbag (see page 24-205). ■

9. Turn the ignition switch to LOCK (0). Disconnect the negative cable from the battery, then wait for 3 minutes.

(cont'd)

DTC Troubleshooting (cont'd)

10. Remove the column cover (see page 20-168), then disconnect the dashboard wire harness 4P connector (A) from the cable reel.

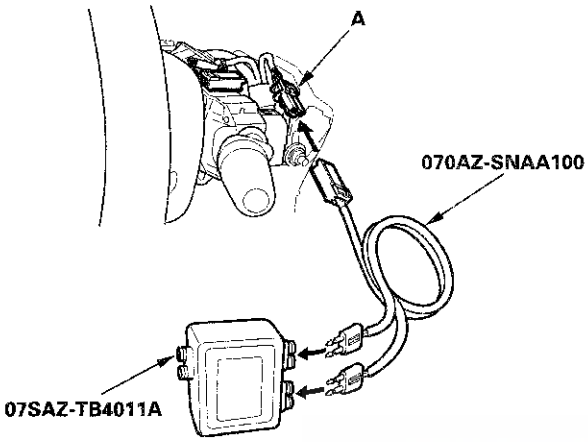

11. Connect the SRS inflator simulator (2 Ω connectors) and the simulator lead to the dashboard wire harness.

12. Reconnect the negative cable to the battery.

13. Clear the DTC memory.

14. Read the DTC.

    Is DTC 11-1x or 11-4x indicated?

    YES—Go to step 15.

    NO—Open in the cable reel; replace the cable reel (see page 24-218).■

15. Turn the ignition switch to LOCK (0). Disconnect the negative cable from the battery, then wait at least 3 minutes.

16. Disconnect SRS unit connector A (39P) from the SRS unit (see step 8 on page 24-33).

17. Disconnect the SRS inflator simulator from the SRS simulator lead. Do not disconnect the simulator lead from the dashboard wire harness 4P connector.

18. Measure the resistance between the terminals of both SRS simulator leads. There should be less than 1.0 Ω.

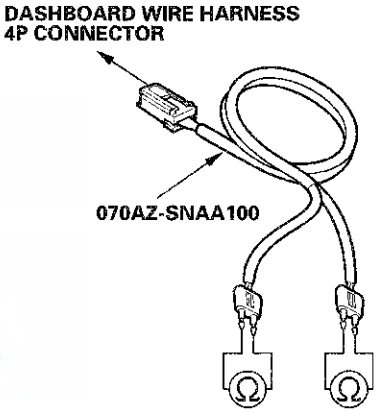

Is the resistance as specified?

YES—Faulty SRS unit or poor connection at SRS unit connector A (39P) and the SRS unit. Check the connection between the connector and the SRS unit. If the connection is OK, replace the SRS unit (see page 24-221).■

NO—Open in the dashboard wire harness; replace the dashboard wire harness.■

DTC 11-11: Short to Another Airbag Inflator in the Driver's Airbag First Inflator (4-door)

NOTE: Before doing this troubleshooting procedure, review SRS Precautions and Procedures (see page 24-23), General Troubleshooting Information (see page 24-34), and Battery Terminal Disconnection and Reconnection (see page 22-89).

1. Clear the DTC memory (see page 24-35).

2. Turn the ignition switch to ON (II), then wait for 10 seconds.

3. Read the DTC (see page 24-35).

   Is DTC 11-11 indicated?

   YES—Go to step 4.

   NO—Intermittent failure, the system is OK at this time. Go to Troubleshooting Intermittent Failures (see page 24-36). If another DTC is indicated, troubleshoot the DTC.

4. Read the DTC (see page 24-35).

   Is DTC 12-11 or 12-41 indicated with DTC 11-11?

   YES—Go to step 5.

   NO—Go to step 9.

5. Turn the ignition switch to LOCK (0).

6. Disconnect the negative cable from the battery, then wait at least 3 minutes.

7. Disconnect SRS unit connector A (39P) from the SRS unit (see step 8 on page 24-33).

8. Check for continuity between the terminals of SRS unit connector B (39P) according to the table. There should be no continuity.

DTC	From terminal	To terminal
12-11	No. 3	No. 5
	No. 4	No. 6
12-41	No. 3	No. 9
	No. 4	No. 10

SRS UNIT CONNECTOR A (39P)

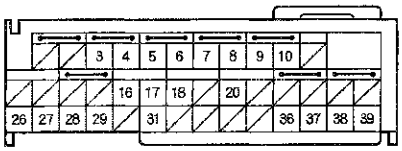

Wire side of female terminals

   Is there continuity?

   YES—Short in the dashboard wire harness; replace the dashboard wire harness. ■

   NO—Faulty SRS unit; replace the SRS unit (see page 24-221). ■

9. Turn the ignition switch to LOCK (0).

10. Disconnect the negative cable from the battery, then wait at least 3 minutes.

11. Disconnect SRS unit connector A (39P) from the SRS unit (see step 8 on page 24-33).

(cont'd)

DTC Troubleshooting (cont'd)

12. Check for continuity between the terminals No. 3 and No. 7 of SRS unit connector A (39P), and between the terminals No. 4 and No. 8. There should be no continuity.

SRS UNIT CONNECTOR A (39P)

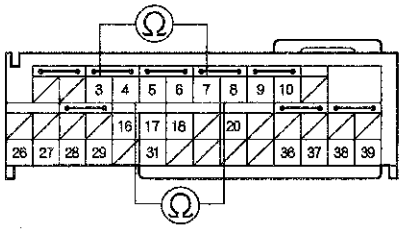

Wire side of female terminals

Is there continuity?

YES—Go to step 13.

NO—Faulty SRS unit; replace the SRS unit (see page 24-221).■

13. Disconnect the driver's airbag 4P connector from the cable reel (see step 2 on page 24-31).

14. Check for continuity between the terminals No. 3 and No. 7 of SRS unit connector A (39P), and between the terminals No. 4 and No. 8. There should be no continuity.

SRS UNIT CONNECTOR A (39P)

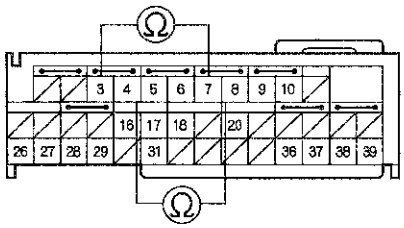

Wire side of female terminals

Is there continuity?

YES—Go to step 15.

NO—Faulty driver's airbag; replace the driver's airbag (see page 24-205).■

15. Remove the column cover (see page 20-168), then disconnect the dashboard wire harness 4P connector (A) from the cable reel.

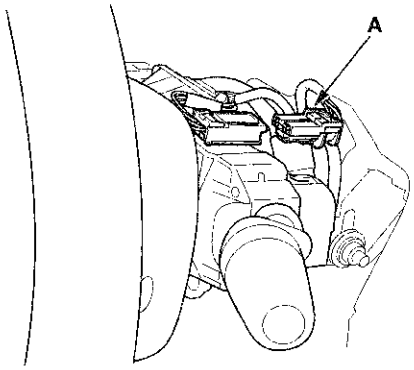

16. Check for continuity between the terminals No. 3 and No. 7 of SRS unit connector A (39P), and between the terminals No. 4 and No. 8. There should be no continuity.

SRS UNIT CONNECTOR A (39P)

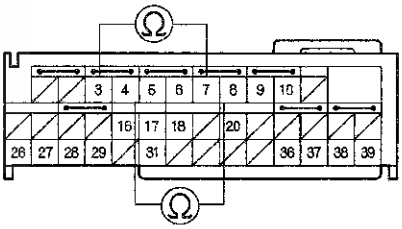

Wire side of female terminals

Is there continuity?

YES—Short in the dashboard wire harness; replace the dashboard wire harness.■

NO—Short in the cable reel; replace the cable reel (see page 24-218).■

DTC 11-41: Short to Another Airbag Inflator in the Driver's Airbag Second Inflator (4-door)

NOTE: Before doing this troubleshooting procedure, review SRS Precautions and Procedures (see page 24-23), General Troubleshooting Information (see page 24-34), and Battery Terminal Disconnection and Reconnection (see page 22-89).

1. Clear the DTC memory (see page 24-35).

2. Turn the ignition switch to ON (II), then wait for 10 seconds.

3. Read the DTC (see page 24-35).

   Is DTC 11-41 indicated?

   YES—Go to step 4.

   NO—Intermittent failure, the system is OK at this time. Go to Troubleshooting Intermittent Failures (see page 24-36). If another DTC is indicated, troubleshoot the DTC.

4. Read the DTC (see page 24-35).

   Is DTC 12-11 or 12-41 indicated with DTC 11-41?

   YES—Go to step 5.

   NO—Short in the dashboard wire harness; replace the dashboard wire harness. ■

5. Turn the ignition switch to LOCK (0).

6. Disconnect the negative cable from the battery, then wait at least 3 minutes.

7. Disconnect SRS unit connector A (39P) from the SRS unit (see step 8 on page 24-33).

8. Check for continuity between the terminals of SRS unit connector B (39P) according to the table. There should be no continuity.

DTC	From terminal	To terminal
12-11	No. 7	No. 5
	No. 8	No. 6
12-41	No. 7	No. 9
	No. 8	No. 10

SRS UNIT CONNECTOR A (39P)

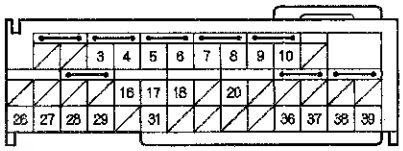

Wire side of female terminals

Is there continuity?

YES—Short in the dashboard wire harness; replace the dashboard wire harness. ■

NO—Faulty SRS unit; replace the SRS unit (see page 24-221). ■

DTC Troubleshooting (cont'd)

DTC 11-3x ("x" can be 0 thru 9 or A thru F):
Short to Another Wire or Decreased Resistance in the Driver's Airbag First Inflator

DTC 11-6x ("x" can be 0 thru 9 or A thru F):
Short to Another Wire or Decreased Resistance in the Driver's Airbag Second Inflator

Special Tools Required
- SRS inflator simulator 07SAZ-TB4011A
- SRS simulator lead J 070AZ-SNAA100
- SRS short canceller 070AZ-SAA0100

NOTE:
- Before doing this troubleshooting procedure, review SRS Precautions and Procedures (see page 24-23), General Troubleshooting Information (see page 24-34), and Battery Terminal Disconnection and Reconnection (see page 22-89).
- 2-door: Before replacing the SRS unit, check the SRS unit software version with the HDS. If the software version is not the latest, update the SRS unit software (see page 24-37) and retest.

1. Clear the DTC memory (see page 24-35).

2. Turn the ignition switch to ON (II), and check that the SRS indicator comes on for about 6 seconds and then goes off.

   Does the SRS indicator stay on, and is DTC 11-3x or 11-6x indicated?

   YES—Go to step 3.

   NO—Intermittent failure, the system is OK at this time. Go to Troubleshooting Intermittent Failures (see page 24-36). If another DTC is indicated, troubleshoot the DTC.

3. Turn the ignition switch to LOCK (0). Disconnect the negative cable from the battery, then wait at least 3 minutes.

4. Disconnect the driver's airbag 4P connector (A) from the cable reel.

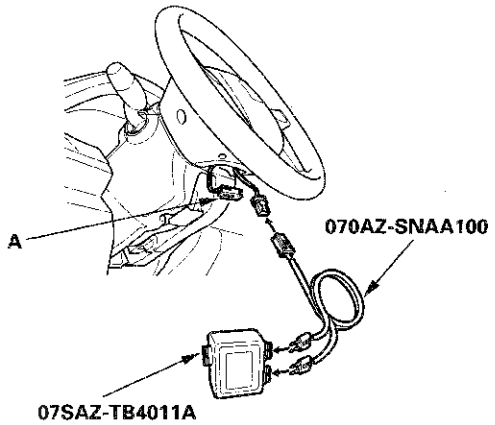

5. Connect the SRS inflator simulator (2 Ω connectors) and simulator lead J to the cable reel.

6. Reconnect the negative cable to the battery.

7. Clear the DTC memory.

8. Read the DTC (see page 24-35).

   Is DTC 11-3x or 11-6x indicated?

   YES—Go to step 9.

   NO—Short in the driver's airbag first or second inflator; replace the driver's airbag (see page 24-205). ■

9. Turn the ignition switch to LOCK (0). Disconnect the negative cable from the battery, then wait at least 3 minutes.

10. Remove the column cover (see page 20-168), then disconnect dashboard wire harness 4P connector (A) from the cable reel.

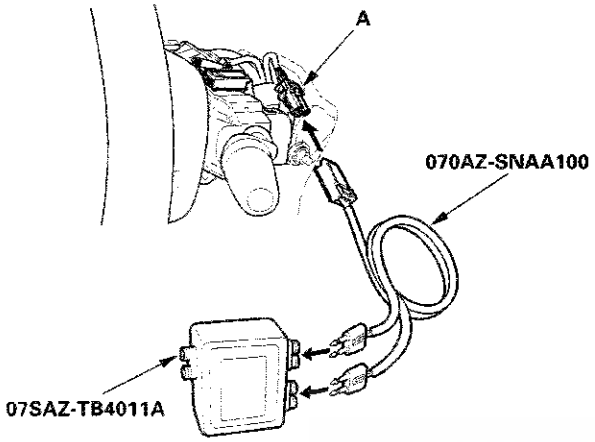

11. Connect the SRS inflator simulator (2 Ω connectors) and the simulator lead to the dashboard wire harness.

12. Reconnect the negative cable to the battery.

13. Clear the DTC memory.

14. Read the DTC.

    Is DTC 11-3x or 11-6x indicated?

    YES—Go to step 15.

    NO—Short in the cable reel; replace the cable reel (see page 24-218).■

15. Turn the ignition switch to LOCK (0). Disconnect the negative cable from the battery, then wait at least 3 minutes.

16. Disconnect SRS unit connector A (39P) from the SRS unit (see step 8 on page 24-33).

17. Disconnect the SRS inflator simulator from the SRS simulator lead. Do not disconnect the simulator lead from the dashboard wire harness 4P connector.

18. Connect the SRS short cancellers (070AZ-SAA0100) to the terminals No. 3 and No. 4 and the terminals No. 7 and No. 8 of SRS unit connector A (39P) (see page 24-30).

19. Measure the resistance between the terminals of both SRS simulator leads. There should be an open circuit or at least 1 MΩ.

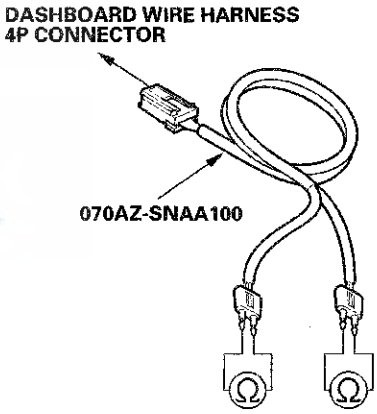

Is the resistance as specified?

YES—Faulty SRS unit or poor connection at SRS unit connector A (39P) and the SRS unit. Check the connection between the connector and the SRS unit. If the connection is OK, replace the SRS unit (see page 24-221).■

NO—Short in the dashboard wire harness; replace the dashboard wire harness.■

DTC Troubleshooting (cont'd)

DTC 11-8x ("x" can be 0 thru 9 or A thru F): Short to Power in the Driver's Airbag First Inflator

DTC 11-Ax ("x" can be 0 thru 9 or A thru F): Short to Power in the Driver's Airbag Second Inflator

Special Tools Required
- SRS inflator simulator 07SAZ-TB4011A
- SRS simulator lead J 070AZ-SNAA100

NOTE:
- Before doing this troubleshooting procedure, review SRS Precautions and Procedures (see page 24-23), General Troubleshooting Information (see page 24-34), and Battery Terminal Disconnection and Reconnection (see page 22-89).
- 2-door: Before replacing the SRS unit, check the SRS unit software version with the HDS. If the software version is not the latest, update the SRS unit software (see page 24-37) and retest.

1. Clear the DTC memory (see page 24-35).

2. Turn the ignition switch to ON (II), and check that the SRS indicator comes on for about 6 seconds and then goes off.

   Does the SRS indicator stay on, and is DTC 11-8x or 11-Ax indicated?

   YES—Go to step 3.

   NO—Intermittent failure, the system is OK at this time. Go to Troubleshooting Intermittent Failures (see page 24-36). If another DTC is indicated, troubleshoot the DTC.

3. Turn the ignition switch to LOCK (0). Disconnect the negative cable from the battery, then wait at least 3 minutes.

4. Disconnect the driver's airbag 4P connector (A) from the cable reel.

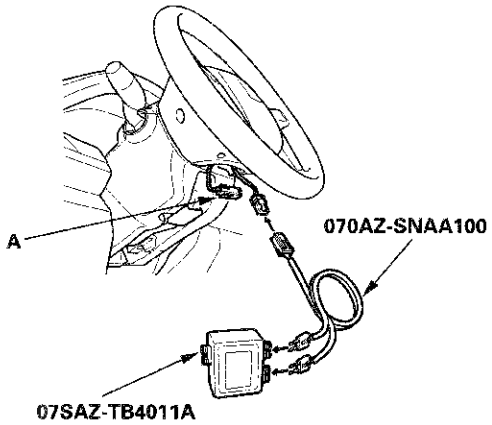

5. Connect the SRS inflator simulator (2 Ω connectors) and simulator lead J to the cable reel.

6. Reconnect the negative cable to the battery.

7. Clear the DTC memory.

8. Read the DTC (see page 24-35).

   Is DTC 11-8x or 11-Ax indicated?

   YES—Go to step 9.

   NO—Short to power in the driver's airbag first or second inflator; replace the driver's airbag (see page 24-205). ■

9. Turn the ignition switch to LOCK (0). Disconnect the negative cable from the battery, then wait at least 3 minutes.

10. Remove the column cover (see page 20-168), then disconnect the dashboard wire harness 4P connector (A) from the cable reel.

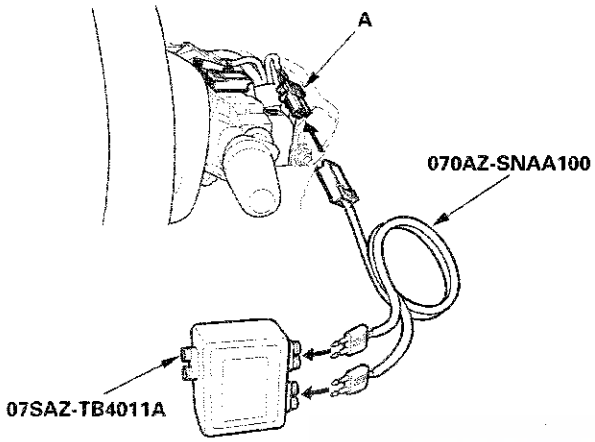

11. Connect the SRS inflator simulator (2 Ω connectors) and the simulator lead to the dashboard wire harness.

12. Reconnect the negative cable to the battery.

13. Clear the DTC memory.

14. Read the DTC.

    Is DTC 11-8x or 11-Ax indicated?

    YES—Go to step 15.

    NO—Short to power in the cable reel; replace the cable reel (see page 24-218).■

15. Turn the ignition switch to LOCK (0). Disconnect the negative cable from the battery, then wait at least 3 minutes.

16. Disconnect SRS unit connector A (39P) from the SRS unit (see step 8 on page 24-33).

17. Disconnect the SRS inflator simulator from the SRS simulator lead. Do not disconnect the simulator lead from the dashboard wire harness 4P connector.

18. Reconnect the negative cable to the battery.

19. Turn the ignition switch to ON (II).

20. Measure the voltage between each terminal of the SRS simulator lead and body ground. There should be less than 0.2 V.

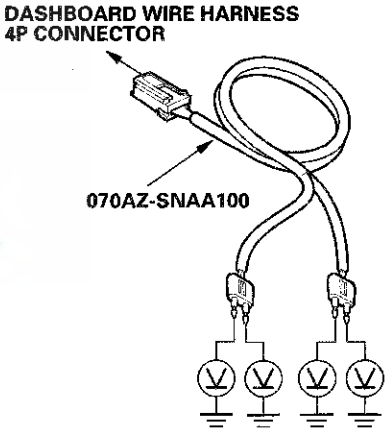

Is the voltage as specified?

YES—Faulty SRS unit or poor connection at SRS unit connector A (39P) and the SRS unit. Check the connection between the connector and the SRS unit. If the connection is OK, replace the SRS unit (see page 24-221).■

NO—Short to power in the dashboard wire harness; replace the dashboard wire harness.■

DTC Troubleshooting (cont'd)

DTC 11-9x ("x" can be 0 thru 9 or A thru F): Short to Ground in the Driver's Airbag First Inflator

DTC 11-Bx ("x" can be 0 thru 9 or A thru F): Short to Ground in the Driver's Airbag Second Inflator

Special Tools Required
- SRS inflator simulator 07SAZ-TB4011A
- SRS simulator lead J 070AZ-SNAA100

NOTE:
- Before doing this troubleshooting procedure, review SRS Precautions and Procedures (see page 24-23), General Troubleshooting Information (see page 24-34), and Battery Terminal Disconnection and Reconnection (see page 22-89).
- 2-door: Before replacing the SRS unit, check the SRS unit software version with the HDS. If the software version is not the latest, update the SRS unit software (see page 24-37) and retest.

1. Clear the DTC memory (see page 24-35).

2. Turn the ignition switch to ON (II), and check that the SRS indicator comes on for about 6 seconds and then goes off.

   Does the SRS indicator stay on, and is DTC 11-9x or 11-Bx indicated?

   YES—Go to step 3.

   NO—Intermittent failure, the system is OK at this time. Go to Troubleshooting Intermittent Failures (see page 24-36). If another DTC is indicated, troubleshoot the DTC.

3. Turn the ignition switch to LOCK (0). Disconnect the negative cable from the battery, then wait at least 3 minutes.

4. Disconnect the driver's airbag 4P connector (A) from the cable reel.

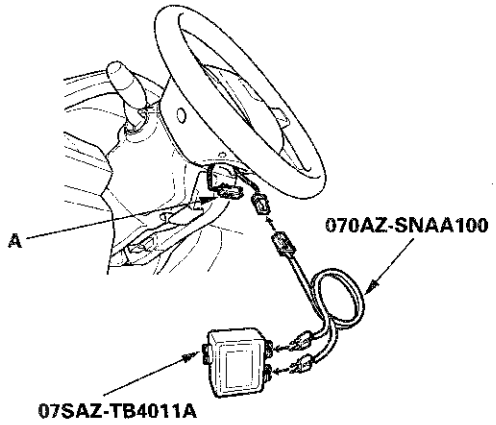

5. Connect the SRS inflator simulator (2 Ω connectors) and simulator lead J to the cable reel.

6. Reconnect the negative cable from the battery.

7. Clear the DTC memory.

8. Read the DTC (see page 24-35).

   Is DTC 11-9x or 11-Bx indicated?

   YES—Go to step 9.

   NO—Short to ground in the driver's airbag first or second inflator; replace the driver's airbag (see page 24-205). ■

9. Turn the ignition switch to LOCK (0). Disconnect the negative cable from the battery, then wait at least 3 minutes.

10. Remove the column cover (see page 20-168), then disconnect the dashboard wire harness 4P connector (A) from the cable reel.

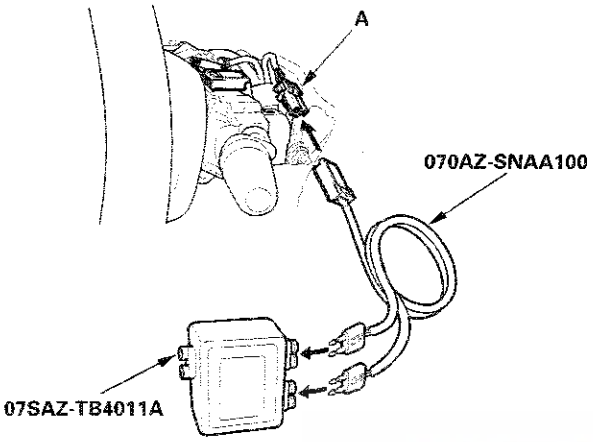

11. Connect the SRS inflator simulator (2 Ω connectors) and the simulator lead to the dashboard wire harness.

12. Reconnect the negative cable to the battery.

13. Clear the DTC memory.

14. Read the DTC.

    Is DTC 11-9x or 11-Bx indicated?

    YES—Go to step 15.

    NO—Short to ground in the cable reel; replace the cable reel (see page 24-218). ■

15. Turn the ignition switch to LOCK (0). Disconnect the negative cable from the battery, then wait at least 3 minutes.

16. Disconnect SRS unit connector A (39P) from the SRS unit (see step 8 on page 24-33).

17. Disconnect the SRS inflator simulator from the SRS simulator lead. Do not disconnect the simulator lead from the dashboard wire harness 4P connector.

18. Measure the resistance between each terminal of the SRS simulator lead and body ground. There should be an open circuit or at least 1 MΩ.

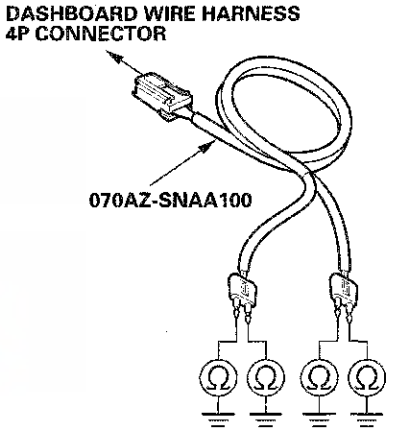

Is the resistance as specified?

YES—Faulty SRS unit or poor connection at SRS unit connector A (39P) and the SRS unit. Check the connection between the connector and the SRS unit. If the connection is OK, replace the SRS unit (see page 24-221). ■

NO—Short to ground in the dashboard wire harness; replace the dashboard wire harness. ■

DTC Troubleshooting (cont'd)

DTC 12-1x ("x" can be 0, 2 thru 9 or A thru F): Open in the Front Passenger's Airbag First Inflator

DTC 12-4x ("x" can be 0, 2 thru 9 or A thru F): Open in the Front Passenger's Airbag Second Inflator

Special Tools Required
- SRS inflator simulator 07SAZ-TB4011A
- SRS simulator lead J 070AZ-SNAA100

NOTE:
- Before doing this troubleshooting procedure, review SRS Precautions and Procedures (see page 24-23), General Troubleshooting Information (see page 24-34), and Battery Terminal Disconnection and Reconnection (see page 22-89).
- 2-door: Before replacing the SRS unit, check the SRS unit software version with the HDS. If the software version is not the latest, update the SRS unit software (see page 24-37) and retest.

1. Clear the DTC memory (see page 24-35).

2. Turn the ignition switch to ON (II), and check that the SRS indicator comes on for about 6 seconds and then goes off.

   Does the SRS indicator stay on, and is DTC 12-1x or 12-4x indicated?

   YES—Go to step 3.

   NO—Intermittent failure, the system is OK at this time. Go to Troubleshooting Intermittent Failures (see page 24-36). If another DTC is indicated, troubleshoot the DTC.

3. Turn the ignition switch to LOCK (0). Disconnect the negative cable from the battery, then wait at least 3 minutes.

4. Remove the lower glove box (see page 20-161), then disconnect the front passenger's airbag 4P connector (A) from the dashboard wire harness.

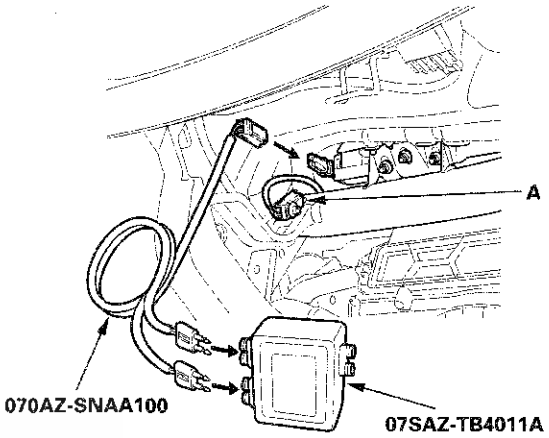

5. Connect the SRS inflator simulator (2 Ω connectors) and simulator lead J to the dashboard wire harness.

6. Reconnect the negative cable to the battery.

7. Clear the DTC memory.

8. Read the DTC (see page 24-35).

   Is DTC 12-1x or 12-4x indicated?

   YES—Go to step 9.

   NO—Open in the front passenger's airbag first or second inflator; replace the front passenger's airbag (see page 24-206). ■

9. Turn the ignition switch to LOCK (0). Disconnect the negative cable from the battery, then wait at least 3 minutes.

10. Disconnect SRS unit connector A (39P) from the SRS unit (see step 8 on page 24-33).

11. Disconnect the SRS inflator simulator from the SRS simulator lead. Do not disconnect the simulator lead from the dashboard wire harness 4P connector.

12. Measure the resistance between the terminals of both SRS simulator leads. There should be less than 1.0 Ω.

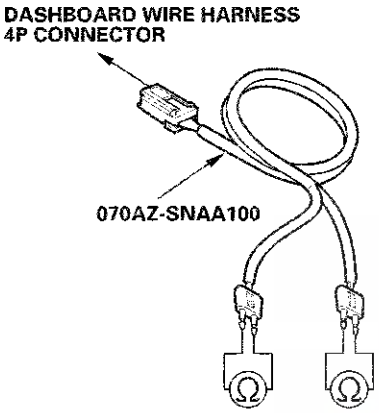

Is the resistance as specified?

YES—Faulty SRS unit or poor connection at SRS unit connector A (39P). Check the connection; if the connection is OK, replace the SRS unit (see page 24-221).■

NO—Open in the dashboard wire harness; replace the dashboard wire harness.■

DTC 12-11: Short to Another Airbag Inflator in the Front Passenger's Airbag First Inflator (4-door)

NOTE:
- Before doing this troubleshooting procedure, review SRS Precautions and Procedures (see page 24-23), General Troubleshooting Information (see page 24-34), and Battery Terminal Disconnection and Reconnection (see page 22-89).
- 2-door: Before replacing the SRS unit, check the SRS unit software version with the HDS. If the software version is not the latest, update the SRS unit software (see page 24-37) and retest.

1. Clear the DTC memory (see page 24-35).

2. Turn the ignition switch to ON (II), then wait for 10 seconds.

3. Read the DTC (see page 24-35).

   Is DTC 12-11 indicated?

   YES—Go to step 4.

   NO—Intermittent failure, the system is OK at this time. Go to Troubleshooting Intermittent Failures (see page 24-36). If another DTC is indicated, troubleshoot the DTC.

4. Read the DTC (see page 24-35).

   Is DTC 11-11 or 11-41 indicated with DTC 12-11?

   YES—Go to step 5.

   NO—Short in the dashboard wire harness; replace the dashboard wire harness.■

5. Turn the ignition switch to LOCK (0).

6. Disconnect the negative cable from the battery, then wait at least 3 minutes.

7. Disconnect SRS unit connector A (39P) from the SRS unit (see step 8 on page 24-33).

(cont'd)

DTC Troubleshooting (cont'd)

8. Check for continuity between the terminals of SRS unit connector A (39P) according to the table. There should be no continuity.

DTC	From terminal	To terminal
12-11	No. 5	No. 3
	No. 6	No. 4
12-41	No. 5	No. 7
	No. 6	No. 8

SRS UNIT CONNECTOR A (39P)

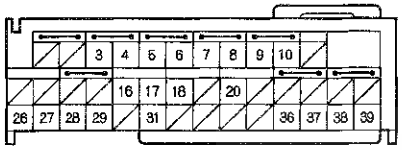

Wire side of female terminals

Is there continuity?

YES—Short in the dashboard wire harness; replace the dashboard wire harness. ■

NO—Faulty SRS unit; replace the SRS unit (see page 24-221). ■

DTC 12-41: Short to Another Airbag Inflator in the Front Passenger's Airbag Second Inflator (4-door)

NOTE: Before doing this troubleshooting procedure, review SRS Precautions and Procedures (see page 24-23), General Troubleshooting Information (see page 24-34), and Battery Terminal Disconnection and Reconnection (see page 22-89).

1. Clear the DTC memory (see page 24-35).
2. Turn the ignition switch to ON (II), then wait for 10 seconds.
3. Read the DTC (see page 24-35).

   Is DTC 12-41 indicated?

   YES—Go to step 4.

   NO—Intermittent failure, the system is OK at this time. Go to Troubleshooting Intermittent Failures (see page 24-36). If another DTC is indicated, troubleshoot the DTC.

4. Read the DTC (see page 24-35).

   Is DTC 11-11 or 11-41 indicated with DTC 12-41?

   YES—Go to step 5.

   NO—Go to step 9.

5. Turn the ignition switch to LOCK (0).
6. Disconnect the negative cable from the battery, then wait at least 3 minutes.
7. Disconnect SRS unit connector A (39P) from the SRS unit (see step 8 on page 24-33).

8. Check for continuity between the terminals of SRS unit connector A (39P) according to the table. There should be no continuity.

DTC	From terminal	To terminal
11-11	No. 9	No. 3
	No. 10	No. 4
11-41	No. 9	No. 7
	No. 10	No. 8

SRS UNIT CONNECTOR A (39P)

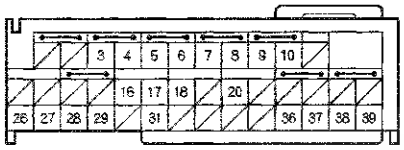

Wire side of female terminals

Is there continuity?

YES—Short in the dashboard wire harness; replace the dashboard wire harness. ■

NO—Faulty SRS unit; replace the SRS unit (see page 24-221). ■

9. Turn the ignition switch to LOCK (0).

10. Disconnect the negative cable from the battery, then wait at least 3 minutes.

11. Disconnect SRS unit connector A (39P) from the SRS unit (see step 8 on page 24-33).

12. Check for continuity between the terminals No. 5 and No. 9 of SRS unit connector A (39P), and between the terminals No. 6 and No. 10. There should be no continuity.

SRS UNIT CONNECTOR A (39P)

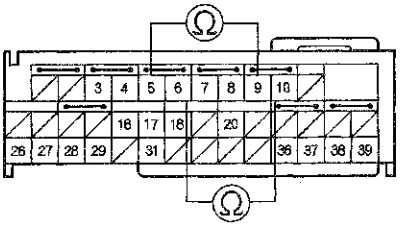

Wire side of female terminals

Is there continuity?

YES—Go to step 13.

NO—Faulty SRS unit; replace the SRS unit (see page 24-221). ■

(cont'd)

DTC Troubleshooting (cont'd)

13. Disconnect the dashboard wire harness 4P connector from the front passenger's airbag (see step 3 on page 24-32).

14. Check for continuity between the terminals No. 5 and No. 9 of SRS unit connector A (39P), and between the terminals No. 6 and No. 10. There should be no continuity.

SRS UNIT CONNECTOR A (39P)

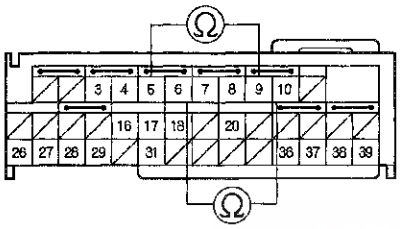

Wire side of female terminals

Is there continuity?

YES—Short in the dashboard wire harness; replace the dashboard wire harness.■

NO—Faulty front passenger's airbag; replace the front passenger's airbag (see page 24-206).■

DTC 12-3x ("x" can be 0 thru 9 or A thru F): Short to Another Wire or Decreased Resistance in the Front Passenger's Airbag First Inflator

DTC 12-6x ("x" can be 0 thru 9 or A thru F): Short to Another Wire or Decreased Resistance in the Front Passenger's Airbag Second Inflator

Special Tools Required
- SRS inflator simulator 07SAZ-TB4011A
- SRS simulator lead J 070AZ-SNAA100
- SRS short canceller 070AZ-SAA0100

NOTE:
- Before doing this troubleshooting procedure, review SRS Precautions and Procedures (see page 24-23), General Troubleshooting Information (see page 24-34), and Battery Terminal Disconnection and Reconnection (see page 22-89).
- 2-door: Before replacing the SRS unit, check the SRS unit software version with the HDS. If the software version is not the latest, update the SRS unit software (see page 24-37) and retest.

1. Clear the DTC memory (see page 24-35).

2. Turn the ignition switch to ON (II), and check that the SRS indicator comes on for about 6 seconds and then goes off.

   Does the SRS indicator stay on, and is DTC 12-3x or 12-6x indicated?

   YES—Go to step 3.

   NO—Intermittent failure, the system is OK at this time. Go to Troubleshooting Intermittent Failures (see page 24-36). If another DTC is indicated, troubleshoot the DTC.

3. Turn the ignition switch to LOCK (0). Disconnect the negative cable from the battery, then wait at least 3 minutes.

4. Remove the lower glove box (see page 20-161), then disconnect the front passenger's airbag 4P connector (A) from the dashboard wire harness.

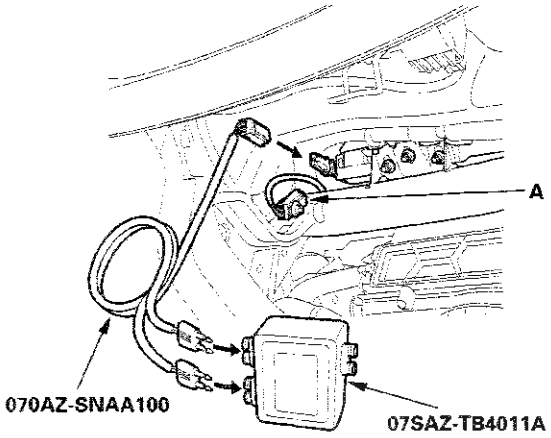

5. Connect the SRS inflator simulator (2 Ω connectors) and simulator lead J to the dashboard wire harness.

6. Reconnect the negative cable to the battery.

7. Clear the DTC memory.

8. Read the DTC (see page 24-35).

   Is DTC 12-3x or 12-6x indicated?

   YES—Go to step 9.

   NO—Short in the front passenger's airbag first or second inflator; replace the front passenger's airbag (see page 24-206). ■

9. Turn the ignition switch to LOCK (0). Disconnect the negative cable from the battery, then wait at least 3 minutes.

10. Disconnect SRS unit connector A (39P) from the SRS unit (see step 8 on page 24-33).

11. Disconnect the SRS inflator simulator from the SRS simulator lead. Do not disconnect the simulator lead from the dashboard wire harness 4P connector.

12. Connect the SRS short cancellers (070AZ-SAA0100) to the terminals No. 5 and No. 6, and the terminals No. 9 and No. 10 of SRS unit connector A (39P) (see page 24-30).

13. Measure the resistance between the terminals of both SRS simulator leads. There should be an open circuit or at least 1 MΩ.

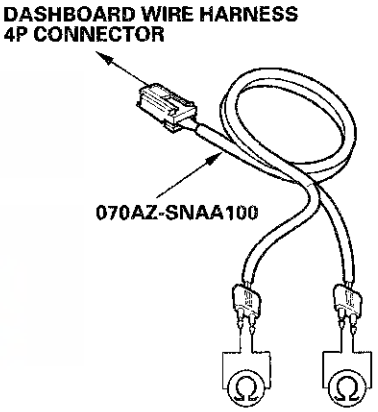

   Is the resistance as specified?

   YES—Faulty SRS unit or poor connection at SRS unit connector A (39P) and the SRS unit. Check the connection between the connector and the SRS unit. If the connection is OK, replace the SRS unit (see page 24-221). ■

   NO—Short in the dashboard wire harness; replace the dashboard wire harness. ■

DTC Troubleshooting (cont'd)

DTC 12-8x ("x" can be 0 thru 9 or A thru F):
Short to Power in the Front Passenger's Airbag First Inflator

DTC 12-Ax ("x" can be 0 thru 9 or A thru F):
Short to Power in the Front Passenger's Airbag Second Inflator

Special Tools Required
- SRS inflator simulator 07SAZ-TB4011A
- SRS simulator lead J 070AZ-SNAA100

NOTE:
- Before doing this troubleshooting procedure, review SRS Precautions and Procedures (see page 24-23), General Troubleshooting Information (see page 24-34), and Battery Terminal Disconnection and Reconnection (see page 22-89).
- 2-door: Before replacing the SRS unit, check the SRS unit software version with the HDS. If the software version is not the latest, update the SRS unit software (see page 24-37) and retest.

1. Clear the DTC memory (see page 24-35).

2. Turn the ignition switch to ON (II), and check that the SRS indicator comes on for about 6 seconds and then goes off.

   Does the SRS indicator stay on, and is DTC 12-8x or 12-Ax indicated?

   YES—Go to step 3.

   NO—Intermittent failure, the system is OK at this time. Go to Troubleshooting Intermittent Failures (see page 24-36). If another DTC is indicated, troubleshoot the DTC.

3. Turn the ignition switch to LOCK (0). Disconnect the negative cable from the battery, then wait at least 3 minutes.

4. Remove the lower glove box (see page 20-161), then disconnect the front passenger's airbag 4P connector (A) from the dashboard wire harness.

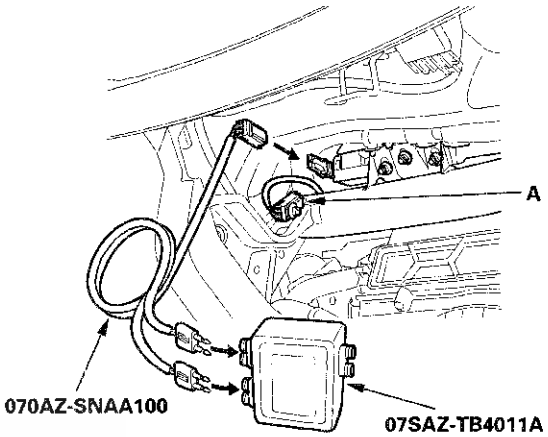

5. Connect the SRS inflator simulator (2 Ω connectors) and simulator lead J to the dashboard wire harness.

6. Reconnect the negative cable to the battery.

7. Clear the DTC memory.

8. Read the DTC (see page 24-35).

   Is DTC 12-8x or 12-Ax indicated?

   YES—Go to step 9.

   NO—Short to power in the front passenger's airbag first or second inflator; replace the front passenger's airbag (see page 24-206). ■

9. Turn the ignition switch to LOCK (0). Disconnect the negative cable from the battery, then wait at least 3 minutes.

10. Disconnect SRS unit connector A (39P) from the SRS unit (see step 8 on page 24-33).

11. Disconnect the SRS inflator simulator from the SRS simulator lead. Do not disconnect the simulator lead from the dashboard wire harness 4P connector.

12. Reconnect the negative cable to the battery.

13. Turn the ignition switch to ON (II).

14. Measure the voltage between each terminal of the SRS simulator lead and body ground. There should be less than 0.2 V.

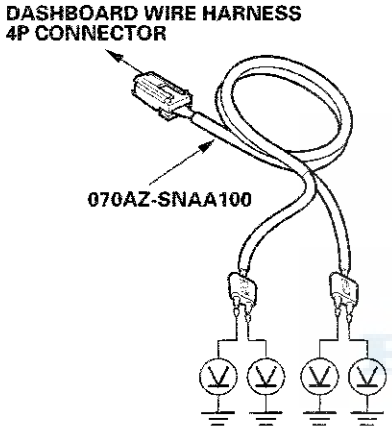

Is the voltage as specified?

YES—Faulty SRS unit or poor connection at SRS unit connector A (39P) and the SRS unit. Check the connection between the connector and the SRS unit. If the connection is OK, replace the SRS unit (see page 24-221).■

NO—Short to power in the dashboard wire harness; replace the dashboard wire harness.■

DTC 12-9x ("x" can be 0 thru 9 or A thru F): Short to Ground in the Front Passenger's Airbag First Inflator

DTC 12-Bx ("x" can be 0 thru 9 or A thru F): Short to Ground in the Front Passenger's Airbag Second Inflator

Special Tools Required
- SRS inflator simulator 07SAZ-TB4011A
- SRS simulator lead J 070AZ-SNAA100

NOTE:
- Before doing this troubleshooting procedure, review SRS Precautions and Procedures (see page 24-23), General Troubleshooting Information (see page 24-34), and Battery Terminal Disconnection and Reconnection (see page 22-89).
- 2-door: Before replacing the SRS unit, check the SRS unit software version with the HDS. If the software version is not the latest, update the SRS unit software (see page 24-37) and retest.

1. Clear the DTC memory (see page 24-35).

2. Turn the ignition switch to ON (II), and check that the SRS indicator comes on for about 6 seconds and then goes off.

   Does the SRS indicator stay on, and is DTC 12-9x or 12-Bx indicated?

   YES—Go to step 3.

   NO—Intermittent failure, the system is OK at this time. Go to Troubleshooting Intermittent Failures (see page 24-36). If another DTC is indicated, troubleshoot the DTC.

3. Turn the ignition switch to LOCK (0). Disconnect the negative cable from the battery, then wait at least 3 minutes.

(cont'd)

DTC Troubleshooting (cont'd)

4. Remove the lower glove box (see page 20-161), then disconnect the front passenger's airbag 4P connector (A) from the dashboard wire harness.

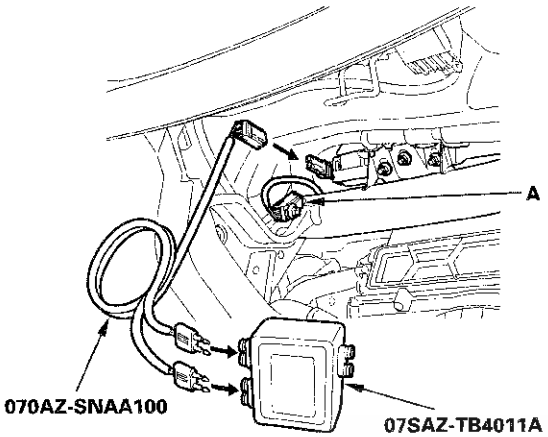

5. Connect the SRS inflator simulator (2 Ω connectors) and simulator lead J to the dashboard wire harness.

6. Reconnect the negative cable to the battery.

7. Clear the DTC memory.

8. Read the DTC (see page 24-35).

   Is DTC 12-9x or 12-Bx indicated?

   YES—Go to step 9.

   NO—Short to ground in the front passenger's airbag first or second inflator; replace the front passenger's airbag (see page 24-206). ■

9. Turn the ignition switch to LOCK (0). Disconnect the negative cable from the battery, then wait at least 3 minutes.

10. Disconnect SRS unit connector A (39P) from the SRS unit (see step 8 on page 24-33).

11. Disconnect the SRS inflator simulator from the SRS simulator lead. Do not disconnect the simulator lead from the dashboard wire harness 4P connector.

12. Measure the resistance between each terminal of the SRS simulator lead and body ground. There should be an open circuit or at least 1 MΩ.

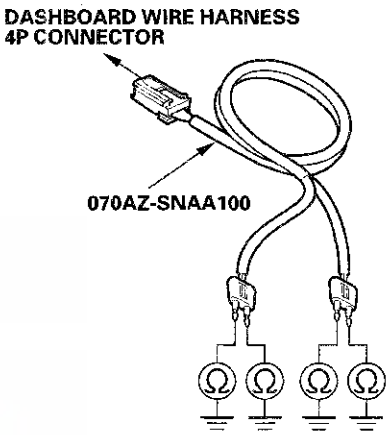

Is the resistance as specified?

YES—Faulty SRS unit or poor connection at SRS unit connector A (39P) and the SRS unit. Check the connection between the connector and the SRS unit. If the connection is OK, replace the SRS unit (see page 24-221). ■

NO—Short to ground in the dashboard wire harness; replace the dashboard wire harness. ■

DTC 21-1x ("x" can be 0, 2 thru 9 or A thru F): Open in the Driver's Seat Belt Tensioner

Special Tools Required
- SRS inflator simulator 07SAZ-TB4011A
- SRS simulator lead K 070AZ-SNAA200
- SRS short canceller 070AZ-SAA0100

NOTE:
- Before doing this troubleshooting procedure, review SRS Precautions and Procedures (see page 24-23), General Troubleshooting Information (see page 24-34), and Battery Terminal Disconnection and Reconnection (see page 22-89).
- 2-door: Before replacing the SRS unit, check the SRS unit software version with the HDS. If the software version is not the latest, update the SRS unit software (see page 24-37) and retest.

1. Clear the DTC memory (see page 24-35).

2. Turn the ignition switch to ON (II), and check that the SRS indicator comes on for about 6 seconds and then goes off.

   Does the SRS indicator stay on, and is DTC 21-1x indicated?

   YES—Go to step 3.

   NO—Intermittent failure, the system is OK at this time. Go to Troubleshooting Intermittent Failures (see page 24-36). If another DTC is indicated, troubleshoot the DTC.

3. Turn the ignition switch to LOCK (0). Disconnect the negative cable from the battery, then wait at least 3 minutes.

4. Remove the B-pillar lower trim (see page 20-107), then disconnect the SRS floor wire harness 4P connector (A) from the driver's seat belt tensioner.

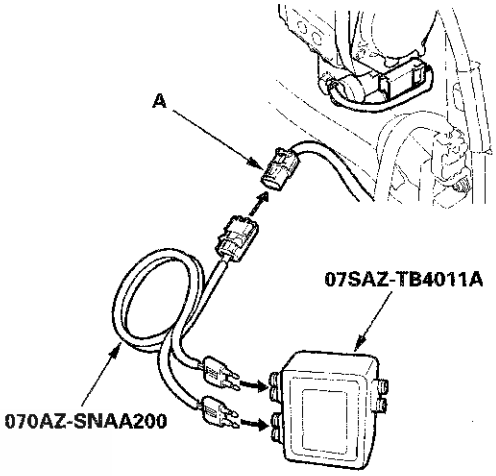

5. Connect the SRS inflator simulator (2 Ω connectors) and simulator lead K to the SRS floor wire harness.

6. Reconnect the negative cable to the battery.

7. Clear the DTC memory.

8. Read the DTC (see page 24-35).

   Is DTC 21-1x indicated?

   YES—Go to step 9.

   NO—Open in the driver's seat belt tensioner; replace the driver's seat belt for 4-door (see page 24-8), for 2-door (see page 24-5). ■

9. Turn the ignition switch to LOCK (0). Disconnect the negative cable from the battery, then wait at least 3 minutes.

(cont'd)

DTC Troubleshooting (cont'd)

10. Disconnect SRS unit connector B (39P) from the SRS unit (see step 8 on page 24-33).

11. Connect the SRS short cancellers (070AZ-SAA0100) to the terminals No. 12 and No. 13 of SRS unit connector B (39P) (see page 24-30).

12. Measure the resistance between the terminals No. 12 and No. 13 of SRS unit connector B (39P). There should be 2.0—3.0 Ω.

SRS UNIT CONNECTOR B (39P)

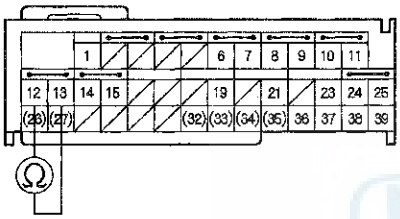

Wire side of female terminals

Is the resistance as specified?

YES—Faulty SRS unit or poor connection at SRS unit connector B (39P) and the SRS unit. Check the connection; if the connection is OK, replace the SRS unit (see page 24-221). ■

NO—Open in the SRS floor wire harness; replace the SRS floor wire harness. ■

DTC 21-11: Short to Another Wire in the Driver's Seat Belt Tensioner (4-door)

NOTE: Before doing this troubleshooting procedure, review SRS Precautions and Procedures (see page 24-23), General Troubleshooting Information (see page 24-34), and Battery Terminal Disconnection and Reconnection (see page 22-89).

1. Clear the DTC memory (see page 24-35).

2. Turn the ignition switch to ON (II), then wait for 10 seconds.

3. Read the DTC (see page 24-35).

   Is DTC 21-11 indicated?

   YES—Go to step 4.

   NO—Intermittent failure, the system is OK at this time. Go to Troubleshooting Intermittent Failures (see page 24-36). If another DTC is indicated, troubleshoot the DTC.

4. Read the DTC (see page 24-35).

   Is DTC 22-11, 31-11, 32-11, 33-11, or 34-11 indicated with DTC 21-11?

   YES—Go to step 5.

   NO—Short in the SRS floor wire harness; replace the SRS floor wire harness. ■

5. Turn the ignition switch to LOCK (0).

6. Disconnect the negative cable from the battery, then wait at least 3 minutes.

7. Disconnect SRS unit connector B (39P) from the SRS unit (see step 8 on page 24-33).

8. Check for continuity between the terminals of SRS unit connector B (39P) according to the table. There should be no continuity.

DTC	From terminal	To terminal
22-11	No. 12	No. 14
	No. 13	No. 15
31-11	No. 12	No. 6
	No. 13	No. 7
32-11	No. 12	No. 8
	No. 13	No. 9
33-11	No. 12	No. 10
	No. 13	No. 11
34-11	No. 12	No. 24
	No. 13	No. 25

SRS UNIT CONNECTOR B (39P)

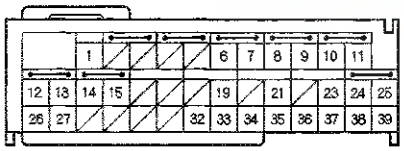

Wire side of female terminals

Is there continuity?

YES—Short in the SRS floor wire harness; replace the SRS floor wire harness.■

NO—Faulty SRS unit; replace the SRS unit (see page 24-221).■

DTC 21-3x ("x" can be 0 thru 9 or A thru F): Short to Another Wire or Decreased Resistance in the Driver's Seat Belt Tensioner

Special Tools Required
- SRS inflator simulator 07SAZ-TB4011A
- SRS simulator lead K 070AZ-SNAA200
- SRS short canceller 070AZ-SAA0100

NOTE:
- Before doing this troubleshooting procedure, review SRS Precautions and Procedures (see page 24-23), General Troubleshooting Information (see page 24-34), and Battery Terminal Disconnection and Reconnection (see page 22-89).
- 2-door: Before replacing the SRS unit, check the SRS unit software version with the HDS. If the software version is not the latest, update the SRS unit software (see page 24-37) and retest.

1. Clear the DTC memory (see page 24-35).

2. Turn the ignition switch to ON (II), and check that the SRS indicator comes on for about 6 seconds and then goes off.

   Does the SRS indicator stay on, and is DTC 21-3x indicated?

   YES—Go to step 3.

   NO—Intermittent failure, the system is OK at this time. Go to Troubleshooting Intermittent Failures (see page 24-36). If another DTC is indicated, troubleshoot the DTC.

3. Turn the ignition switch to LOCK (0). Disconnect the negative cable from the battery, then wait at least 3 minutes.

(cont'd)

DTC Troubleshooting (cont'd)

4. Remove the B-pillar lower trim (see page 20-107), then disconnect the SRS floor wire harness 4P connector (A) from the driver's seat belt tensioner.

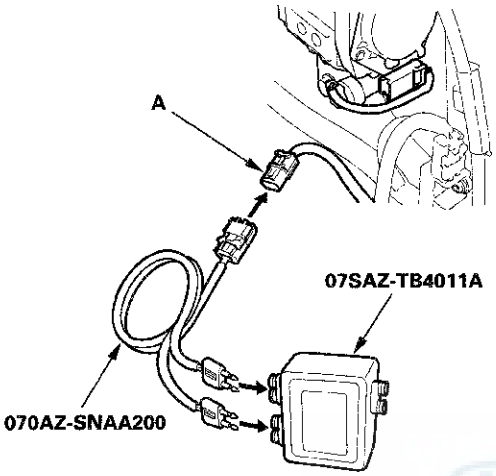

5. Connect the SRS inflator simulator (2 Ω connectors) and simulator lead K to the SRS floor wire harness.

6. Reconnect the negative cable to the battery.

7. Clear the DTC memory.

8. Read the DTC (see page 24-35).

   Is DTC 21-3x indicated?

   YES—Go to step 9.

   NO—Short in the driver's seat belt tensioner; replace the driver's seat belt for 4-door (see page 24-8), for 2-door (see page 24-5). ■

9. Turn the ignition switch to LOCK (0). Disconnect the negative cable from the battery, then wait at least 3 minutes.

10. Disconnect SRS unit connector B (39P) from the SRS unit (see step 8 on page 24-33).

11. Disconnect the simulator lead from the SRS floor wire harness.

12. Connect the SRS short cancellers (070AZ-SAA0100) to the terminals No. 12 and No. 13 of SRS unit connector B (39P) (see page 24-30).

13. Measure the resistance between the terminals No. 12 and No. 13 of SRS unit connector B (39P). There should be an open circuit or at least 1 MΩ.

SRS UNIT CONNECTOR B (39P)

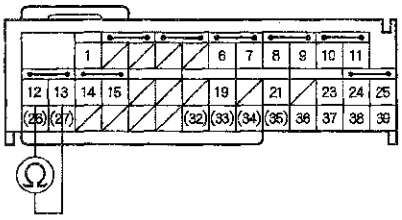

Wire side of female terminals

Is the resistance as specified?

YES—Faulty SRS unit or poor connection at SRS unit connector B (39P) and the SRS unit. Check the connection; if the connection is OK, replace the SRS unit (see page 24-221). ■

NO—Short in the SRS floor wire harness; replace the SRS floor wire harness. ■

DTC 21-8x ("x" can be 0 thru 9 or A thru F): Short to Power in the Driver's Seat Belt Tensioner

Special Tools Required
- SRS inflator simulator 07SAZ-TB4011A
- SRS simulator lead K 070AZ-SNAA200

NOTE:
- Before doing this troubleshooting procedure, review SRS Precautions and Procedures (see page 24-23), General Troubleshooting Information (see page 24-34), and Battery Terminal Disconnection and Reconnection (see page 22-89).
- 2-door: Before replacing the SRS unit, check the SRS unit software version with the HDS. If the software version is not the latest, update the SRS unit software (see page 24-37) and retest.

1. Clear the DTC memory (see page 24-35).

2. Turn the ignition switch to ON (II), and check that the SRS indicator comes on for about 6 seconds and then goes off.

   Does the SRS indicator stay on, and is DTC 21-8x indicated?

   YES—Go to step 3.

   NO—Intermittent failure, the system is OK at this time. Go to Troubleshooting Intermittent Failures (see page 24-36). If another DTC is indicated, troubleshoot the DTC.

3. Turn the ignition switch to LOCK (0). Disconnect the negative cable from the battery, then wait at least 3 minutes.

4. Remove the B-pillar lower trim (see page 20-107), then disconnect the SRS floor wire harness 4P connector (A) from the driver's seat belt tensioner.

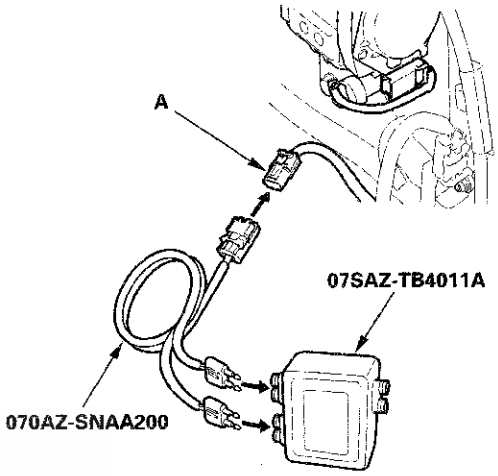

5. Connect the SRS inflator simulator (2 Ω connectors) and simulator lead K to the SRS floor wire harness.

6. Reconnect the negative cable to the battery.

7. Clear the DTC memory.

8. Read the DTC (see page 24-35).

   Is DTC 21-8x indicated?

   YES—Go to step 9.

   NO—Short to power in the driver's seat belt tensioner; replace the driver's seat belt: ■

   - 2-door (see page 24-5)
   - 4-door (see page 24-8)

9. Turn the ignition switch to LOCK (0). Disconnect the negative cable from the battery, then wait at least 3 minutes.

(cont'd)

DTC Troubleshooting (cont'd)

10. Disconnect SRS unit connector B (39P) from the SRS unit (see step 8 on page 24-33).

11. Disconnect the simulator lead from the SRS floor wire harness.

12. Reconnect the negative cable to the battery.

13. Turn the ignition switch to ON (II).

14. Measure the voltage between the terminal No. 12 of SRS unit connector B (39P) and body ground, and between the terminal No. 13 and body ground. There should be less than 0.2 V.

SRS UNIT CONNECTOR B (39P)

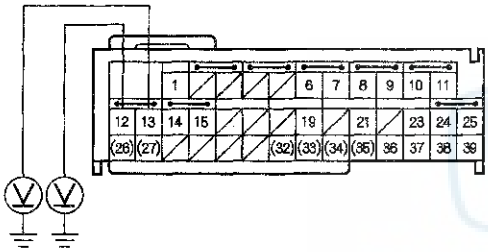

Wire side of female terminals

Is the voltage as specified?

YES—Faulty SRS unit or poor connection at SRS unit connector B (39P) and the SRS unit. Check the connection; if the connection is OK, replace the SRS unit (see page 24-221).■

NO—Short to power in the SRS floor wire harness; replace the SRS floor wire harness.■

DTC 21-9x ("x" can be 0 thru 9 or A thru F): Short to Ground in the Driver's Seat Belt Tensioner

Special Tools Required
- SRS inflator simulator 07SAZ-TB4011A
- SRS simulator lead K 070AZ-SNAA200

NOTE:
- Before doing this troubleshooting procedure, review SRS Precautions and Procedures (see page 24-23), General Troubleshooting Information (see page 24-34), and Battery Terminal Disconnection and Reconnection (see page 22-89).
- 2-door: Before replacing the SRS unit, check the SRS unit software version with the HDS. If the software version is not the latest, update the SRS unit software (see page 24-37) and retest.

1. Clear the DTC memory (see page 24-35).

2. Turn the ignition switch to ON (II), and check that the SRS indicator comes on for about 6 seconds and then goes off.

   Does the SRS indicator stay on, and is DTC 21-9x indicated?

   YES—Go to step 3.

   NO—Intermittent failure, the system is OK at this time. Go to Troubleshooting Intermittent Failures (see page 24-36). If another DTC is indicated, troubleshoot the DTC.

3. Turn the ignition switch to LOCK (0). Disconnect the negative cable from the battery, then wait at least 3 minutes.

4. Remove the B-pillar lower trim (see page 20-107), then disconnect the SRS floor wire harness 4P connector (A) from the driver's seat belt tensioner.

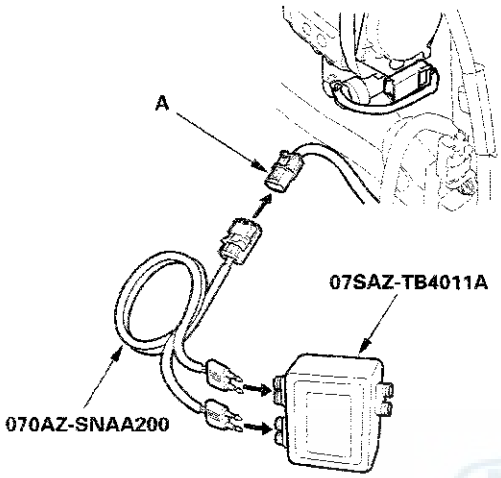

5. Connect the SRS inflator simulator (2 Ω connectors) and simulator lead K to the SRS floor wire harness.

6. Reconnect the negative cable to the battery.

7. Clear the DTC memory.

8. Read the DTC (see page 24-35).

   Is DTC 21-9x indicated?

   YES—Go to step 9.

   NO—Short to ground in the driver's seat belt tensioner; replace the driver's seat belt for 4-door (see page 24-8), for 2-door (see page 24-5).■

9. Turn the ignition switch to LOCK (0). Disconnect the negative cable from the battery, then wait at least 3 minutes.

10. Disconnect SRS unit connector B (39P) from the SRS unit (see step 8 on page 24-33).

11. Disconnect the simulator lead from the SRS floor wire harness.

12. Measure the resistance between the terminal No. 12 of SRS unit connector B (39P) and body ground, and between the terminal No. 13 and body ground. There should be an open circuit or at least 1 MΩ.

SRS UNIT CONNECTOR B (39P)

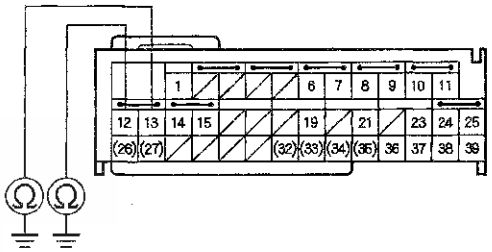

Wire side of female terminals

Is the resistance as specified?

YES—Faulty SRS unit or poor connection at SRS unit connector B (39P) and the SRS unit. Check the connection; if the connection is OK, replace the SRS unit (see page 24-221).■

NO—Short to ground in the SRS floor wire harness; replace the SRS floor wire harness.■

DTC Troubleshooting (cont'd)

DTC 22-1x ("x" can be 0, 2 thru 9 or A thru F): Open in the Front Passenger's Seat Belt Tensioner

Special Tools Required
- SRS inflator simulator 07SAZ-TB4011A
- SRS simulator lead K 070AZ-SNAA200
- SRS short canceller 070AZ-SAA0100

NOTE:
- Before doing this troubleshooting procedure, review SRS Precautions and Procedures (see page 24-23), General Troubleshooting Information (see page 24-34), and Battery Terminal Disconnection and Reconnection (see page 22-89).
- 2-door: Before replacing the SRS unit, check the SRS unit software version with the HDS. If the software version is not the latest, update the SRS unit software (see page 24-37) and retest.

1. Clear the DTC memory (see page 24-35).

2. Turn the ignition switch to ON (II), and check that the SRS indicator comes on for about 6 seconds and then goes off.

   Does the SRS indicator stay on, and is DTC 22-1x indicated?

   YES—Go to step 3.

   NO—Intermittent failure, the system is OK at this time. Go to Troubleshooting Intermittent Failures (see page 24-36). If another DTC is indicated, troubleshoot the DTC.

3. Turn the ignition switch to LOCK (0). Disconnect the negative cable from the battery, then wait at least 3 minutes.

4. Remove the B-pillar lower trim (see page 20-107), then disconnect the SRS floor wire harness 4P connector (A) from the front passenger's seat belt tensioner.

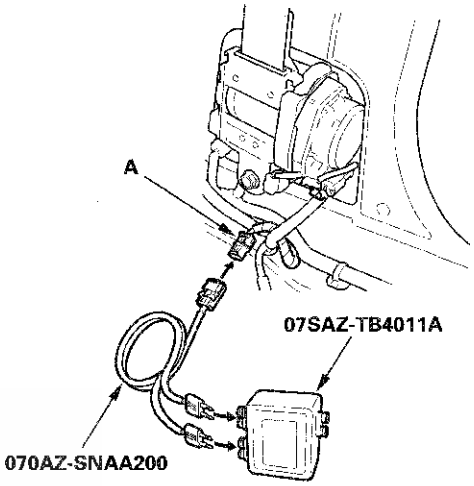

5. Connect the SRS inflator simulator (2 Ω connectors) and simulator lead K to the SRS floor wire harness.

6. Reconnect the negative cable to the battery.

7. Clear the DTC memory.

8. Read the DTC (see page 24-35).

   Is DTC 22-1x indicated?

   YES—Go to step 9.

   NO—Open in the front passenger's seat belt tensioner; replace the front passenger's seat belt for 4-door (see page 24-8), for 2-door (see page 24-5).■

9. Turn the ignition switch to LOCK (0). Disconnect the negative cable from the battery, then wait at least 3 minutes.

10. Disconnect SRS unit connector B (39P) from the SRS unit (see step 8 on page 24-33).

11. Connect the SRS short cancellers (070AZ-SAA0100) to the terminals No. 14 and No. 15 of SRS unit connector B (39P) (see page 24-30).

12. Measure the resistance between the terminals No. 14 and No. 15 of SRS unit connector B (39P). There should be 2.0—3.0 Ω.

SRS UNIT CONNECTOR B (39P)

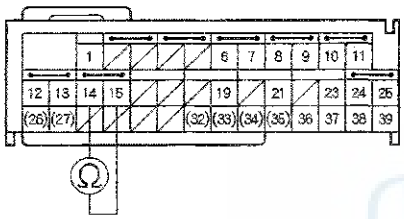

Wire side of female terminals

Is the resistance as specified?

YES—Faulty SRS unit or poor connection at SRS unit connector B (39P) and the SRS unit. Check the connection; if the connection is OK, replace the SRS unit (see page 24-221).■

NO—Open in the SRS floor wire harness; replace the SRS floor wire harness.■

DTC 22-11: Short to Another Wire in the Front Passenger's Seat Belt Tensioner (4-door)

NOTE: Before doing this troubleshooting procedure, review SRS Precautions and Procedures (see page 24-23), General Troubleshooting Information (see page 24-34), and Battery Terminal Disconnection and Reconnection (see page 22-89).

1. Clear the DTC memory (see page 24-35).

2. Turn the ignition switch to ON (II), then wait for 10 seconds.

3. Read the DTC (see page 24-35).

   Is DTC 22-11 indicated?

   YES—Go to step 4.

   NO—Intermittent failure, the system is OK at this time. Go to Troubleshooting Intermittent Failures (see page 24-36). If another DTC is indicated, troubleshoot the DTC.

4. Read the DTC (see page 24-35).

   Is DTC 21-11, 31-11, 32-11, 33-11, or 34-11 indicated with DTC 22-11?

   YES—Go to step 5.

   NO—Short in the SRS floor wire harness; replace the SRS floor wire harness.■

(cont'd)

DTC Troubleshooting (cont'd)

5. Turn the ignition switch to LOCK (0).

6. Disconnect the negative cable from the battery, then wait at least 3 minutes.

7. Disconnect SRS unit connector B (39P) from the SRS unit (see step 8 on page 24-33).

8. Check for continuity between the terminals of SRS unit connector B (39P) according to the table. There should be no continuity.

DTC	From terminal	To terminal
21-11	No. 14	No. 12
	No. 15	No. 13
31-11	No. 14	No. 6
	No. 15	No. 7
32-11	No. 14	No. 8
	No. 15	No. 9
33-11	No. 14	No. 10
	No. 15	No. 11
34-11	No. 14	No. 24
	No. 15	No. 25

SRS UNIT CONNECTOR B (39P)

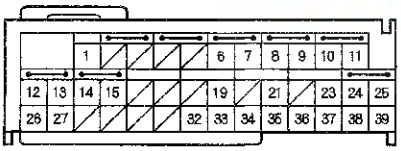

Wire side of female terminals

Is there continuity?

YES—Short in the SRS floor wire harness; replace the SRS floor wire harness. ■

NO—Faulty SRS unit; replace the SRS unit (see page 24-221). ■

DTC 22-3x ("x" can be 0 thru 9 or A thru F): Short to Another Wire or Decreased Resistance in the Front Passenger's Seat Belt Tensioner

Special Tools Required
- SRS inflator simulator 07SAZ-TB4011A
- SRS simulator lead K 070AZ-SNAA200
- SRS short canceller 070AZ-SAA0100

NOTE:
- Before doing this troubleshooting procedure, review SRS Precautions and Procedures (see page 24-23), General Troubleshooting Information (see page 24-34), and Battery Terminal Disconnection and Reconnection (see page 22-89).
- 2-door: Before replacing the SRS unit, check the SRS unit software version with the HDS. If the software version is not the latest, update the SRS unit software (see page 24-37) and retest.

1. Clear the DTC memory (see page 24-35).

2. Turn the ignition switch to ON (II), and check that the SRS indicator comes on for about 6 seconds and then goes off.

   Does the SRS indicator stay on, and is DTC 22-3x indicated?

   YES—Go to step 3.

   NO—Intermittent failure, the system is OK at this time. Go to Troubleshooting Intermittent Failures (see page 24-36). If another DTC is indicated, troubleshoot the DTC.

3. Turn the ignition switch to LOCK (0). Disconnect the negative cable from the battery, then wait at least 3 minutes.

4. Remove the B-pillar lower trim (see page 20-107), then disconnect the SRS floor wire harness 4P connector (A) from the front passenger's seat belt tensioner.

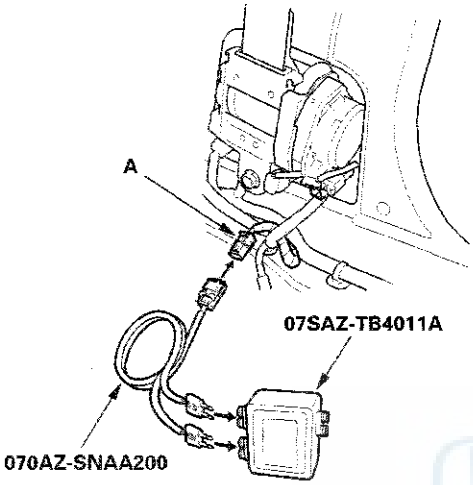

5. Connect the SRS inflator simulator (2 Ω connectors) and simulator lead K to the SRS floor wire harness.

6. Reconnect the negative cable to the battery.

7. Clear DTC memory.

8. Read the DTC (see page 24-35).

   Is DTC 22-3x indicated?

   YES—Go to step 9.

   NO—Short in the front passenger's seat belt tensioner; replace the front passenger's seat belt for 4-door (see page 24-8), for 2-door (see page 24-5).■

9. Turn the ignition switch to LOCK (0). Disconnect the negative cable from the battery, then wait at least 3 minutes.

10. Disconnect SRS unit connector B (39P) from the SRS unit (see step 8 on page 24-33).

11. Disconnect the simulator lead from the SRS floor wire harness.

12. Connect the SRS short cancellers (070AZ-SAA0100) to the terminals No. 14 and No. 15 of SRS unit connector B (39P) (see page 24-30).

13. Measure the resistance between the terminals No. 14 and No. 15 of SRS unit connector B (39P). There should be an open circuit or at least 1 MΩ.

SRS UNIT CONNECTOR B (39P)

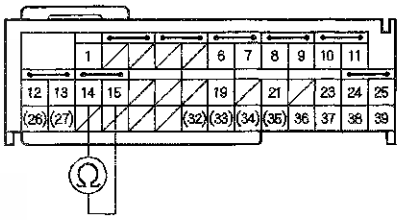

Wire side of female terminals

Is the resistance as specified?

YES—Faulty SRS unit or poor connection at SRS unit connector B (39P) and the SRS unit. Check the connection; if the connection is OK, replace the SRS unit (see page 24-221).■

NO—Short in the SRS floor wire harness; replace the SRS floor wire harness.■

DTC Troubleshooting (cont'd)

DTC 22-8x ("x" can be 0 thru 9 or A thru F): Short to Power in the Front Passenger's Seat Belt Tensioner

Special Tools Required
- SRS inflator simulator 07SAZ-TB4011A
- SRS simulator lead K 070AZ-SNAA200

NOTE:
- Before doing this troubleshooting procedure, review SRS Precautions and Procedures (see page 24-23), General Troubleshooting Information (see page 24-34), and Battery Terminal Disconnection and Reconnection (see page 22-89).
- 2-door: Before replacing the SRS unit, check the SRS unit software version with the HDS. If the software version is not the latest, update the SRS unit software (see page 24-37) and retest.

1. Clear the DTC memory (see page 24-35).

2. Turn the ignition switch to ON (II), and check that the SRS indicator comes on for about 6 seconds and then goes off.

   Does the SRS indicator stay on, and is DTC 22-8x indicated?

   YES—Go to step 3.

   NO—Intermittent failure, the system is OK at this time. Go to Troubleshooting Intermittent Failures (see page 24-36). If another DTC is indicated, troubleshoot the DTC.

3. Turn the ignition switch to LOCK (0). Disconnect the negative cable from the battery, then wait at least 3 minutes.

4. Remove the B-pillar lower trim (see page 20-107), then disconnect the SRS floor wire harness 4P connector (A) from the front passenger's seat belt tensioner.

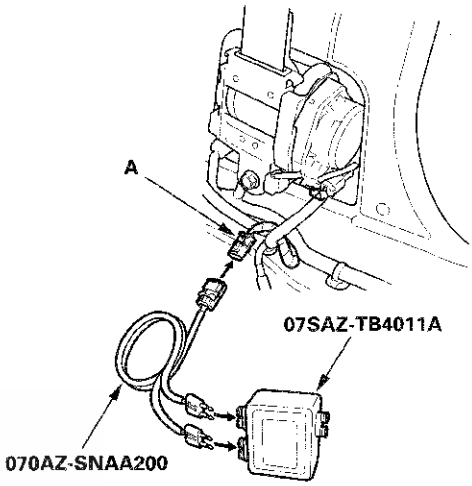

5. Connect the SRS inflator simulator (2 Ω connectors) and simulator lead K to the SRS floor wire harness.

6. Reconnect the negative cable to the battery.

7. Clear the DTC memory.

8. Read the DTC (see page 24-35).

   Is DTC 22-8x indicated?

   YES—Go to step 9.

   NO—Short to power in the front passenger's seat belt tensioner; replace the front passenger's seat belt for 4-door (see page 24-8), for 2-door (see page 24-5). ■

9. Turn the ignition switch to LOCK (0). Disconnect the negative cable from the battery, then wait at least 3 minutes.

10. Disconnect SRS unit connector B (39P) from the SRS unit (see step 8 on page 24-33).

11. Disconnect the simulator lead from the SRS floor wire harness.

12. Reconnect the negative cable to the battery.

13. Turn the ignition switch to ON (II).

14. Measure the voltage between the terminal No. 14 of SRS unit connector B (39P) and body ground, and between the terminal No. 15 and body ground. There should be less than 0.2 V.

SRS UNIT CONNECTOR B (39P)

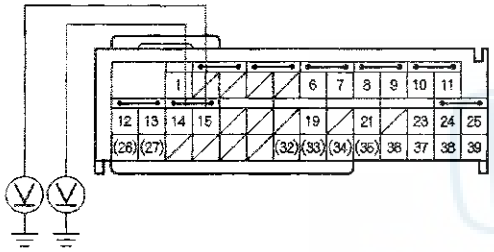

Wire side of female terminals

Is the voltage as specified?

YES—Faulty SRS unit or poor connection at SRS unit connector B (39P) and the SRS unit. Check the connection; if the connection is OK, replace the SRS unit (see page 24-221). ■

NO—Short to power in the SRS floor wire harness; replace the SRS floor wire harness. ■

DTC 22-9x ("x" can be 0 thru 9 or A thru F): Short to Ground in the Front Passenger's Seat Belt Tensioner

Special Tools Required
- SRS inflator simulator 07SAZ-TB4011A
- SRS simulator lead K 070AZ-SNAA200

NOTE:
- Before doing this troubleshooting procedure, review SRS Precautions and Procedures (see page 24-23), General Troubleshooting Information (see page 24-34), and Battery Terminal Disconnection and Reconnection (see page 22-89).
- 2-door: Before replacing the SRS unit, check the SRS unit software version with the HDS. If the software version is not the latest, update the SRS unit software (see page 24-37) and retest.

1. Clear the DTC memory (see page 24-35).

2. Turn the ignition switch to ON (II), and check that the SRS indicator comes on for about 6 seconds and then goes off.

   Does the SRS indicator stay on, and is DTC 22-9x indicated?

   YES—Go to step 3.

   NO—Intermittent failure, the system is OK at this time. Go to Troubleshooting Intermittent Failures (see page 24-36). If another DTC is indicated, troubleshoot the DTC.

3. Turn the ignition switch to LOCK (0). Disconnect the negative cable from the battery, then wait at least 3 minutes.

(cont'd)

DTC Troubleshooting (cont'd)

4. Remove the B-pillar lower trim (see page 20-107), then disconnect the SRS floor wire harness 4P connector (A) from the front passenger's seat belt tensioner.

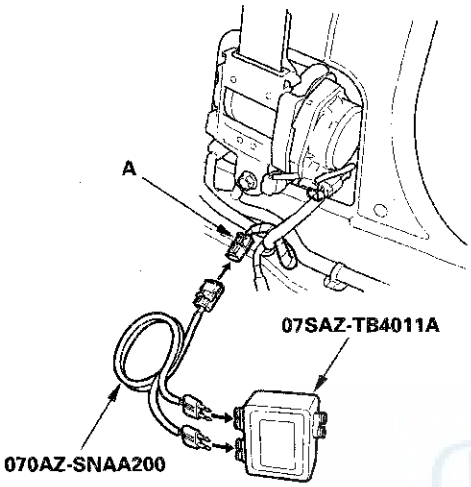

5. Connect the SRS inflator simulator (2 Ω connectors) and simulator lead K to the SRS floor wire harness.

6. Reconnect the negative cable to the battery.

7. Clear the DTC memory.

8. Read the DTC (see page 24-35).

   Is DTC 22-9x indicated?

   YES—Go to step 9.

   NO—Short to ground in the front passenger's seat belt tensioner; replace the front passenger's seat belt for 4-door (see page 24-8), for 2-door (see page 24-5). ■

9. Turn the ignition switch to LOCK (0). Disconnect the negative cable from the battery, then wait at least 3 minutes.

10. Disconnect SRS unit connector B (39P) from the SRS unit (see step 8 on page 24-33).

11. Disconnect the simulator lead from the SRS floor wire harness.

12. Measure the resistance between the terminal No. 14 of SRS unit connector B (39P) and body ground, and between the terminal No. 15 and body ground. There should be an open circuit or at least 1 MΩ.

SRS UNIT CONNECTOR B (39P)

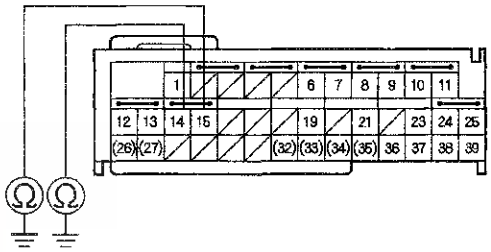

Wire side of female terminals

Is the resistance as specified?

YES—Faulty SRS unit or poor connection at SRS unit connector B (39P) and the SRS unit. Check the connection; if the connection is OK, replace the SRS unit (see page 24-221). ■

NO—Short to ground in the SRS floor wire harness; replace the SRS floor wire harness. ■

DTC 31-1x ("x" can be 0, 2 thru 9 or A thru F): Open in the Driver's Side Airbag Inflator

Special Tools Required
- SRS inflator simulator 07SAZ-TB4011A
- SRS simulator lead L 070AZ-SNAA300
- SRS short canceller 070AZ-SAA0100

NOTE:
- Before doing this troubleshooting procedure, review SRS Precautions and Procedures (see page 24-23), General Troubleshooting Information (see page 24-34), and Battery Terminal Disconnection and Reconnection (see page 22-89).
- 2-door: Before replacing the SRS unit, check the SRS unit software version with the HDS. If the software version is not the latest, update the SRS unit software (see page 24-37) and retest.

1. Clear the DTC memory (see page 24-35).

2. Turn the ignition switch to ON (II), and check that the SRS indicator comes on for about 6 seconds and then goes off.

   Does the SRS indicator stay on, and is DTC 31-1x indicated?

   YES—Go to step 3.

   NO—Intermittent failure, the system is OK at this time. Go to Troubleshooting Intermittent Failures (see page 24-36). If another DTC is indicated, troubleshoot the DTC.

3. Turn the ignition switch to LOCK (0). Disconnect the negative cable from the battery, then wait at least 3 minutes.

4. Disconnect the SRS floor wire harness 2P connector (A) from the driver's side airbag (B).

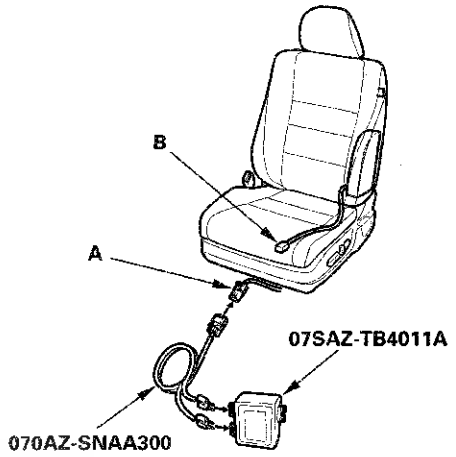

5. Connect the SRS inflator simulator (2 Ω connectors) and simulator lead L to the SRS floor wire harness.

6. Reconnect the negative cable to the battery.

7. Clear the DTC memory.

8. Read the DTC (see page 24-35).

   Is DTC 31-1x indicated?

   YES—Go to step 9.

   NO—Open in the driver's side airbag inflator; replace the driver's side airbag (see page 24-208). ■

9. Turn the ignition switch to LOCK (0). Disconnect the negative cable from the battery, then wait at least 3 minutes.

(cont'd)

DTC Troubleshooting (cont'd)

10. Disconnect SRS unit connector B (39P) from the SRS unit (see step 8 on page 24-33).

11. Disconnect the SRS inflator simulator from SRS simulator lead. Do not disconnect the simulator lead from the SRS floor wire harness 2P connector.

12. Connect the SRS short cancellers (070AZ-SAA0100) to the terminals No. 6 and No. 7 of SRS unit connector B (39P) (see page 24-30).

13. Measure the resistance between the terminals of the black SRS simulator lead (A). There should be less than 1.0 Ω.

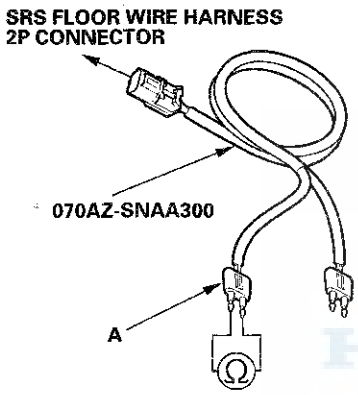

Is the resistance as specified?

YES—Faulty SRS unit or poor connection at SRS unit connector B (39P) and the SRS unit. Check the connection; if the connection is OK, replace the SRS unit (see page 24-221). ■

NO—Open or increased resistance in the SRS floor wire harness; replace the SRS floor wire harness. ■

DTC 31-11: Short to Another Wire in the Driver's Side Airbag Inflator (4-door)

NOTE: Before doing this troubleshooting procedure, review SRS Precautions and Procedures (see page 24-23), General Troubleshooting Information (see page 24-34), and Battery Terminal Disconnection and Reconnection (see page 22-89).

1. Clear the DTC memory (see page 24-35).

2. Turn the ignition switch to ON (II), then wait for 10 seconds.

3. Read the DTC (see page 24-35).

   Is DTC 31-11 indicated?

   YES—Go to step 4.

   NO—Intermittent failure, the system is OK at this time. Go to Troubleshooting Intermittent Failures (see page 24-36). If another DTC is indicated, troubleshoot the DTC.

4. Read the DTC (see page 24-35).

   Is DTC 21-11, 22-11, 32-11, 33-11, or 34-11 indicated with DTC 31-11?

   YES—Go to step 5.

   NO—Short in the SRS floor wire harness; replace the SRS floor wire harness. ■

5. Turn the ignition switch to LOCK (0).

6. Disconnect the negative cable from the battery, then wait at least 3 minutes.

7. Disconnect SRS unit connector B (39P) from the SRS unit (see step 8 on page 24-33).

8. Check for continuity between the terminals of SRS unit connector B (39P) according to the table. There should be no continuity.

DTC	From terminal	To terminal
21-11	No. 6	No. 12
	No. 7	No. 13
22-11	No. 6	No. 14
	No. 7	No. 15
32-11	No. 6	No. 8
	No. 7	No. 9
33-11	No. 6	No. 10
	No. 7	No. 11
34-11	No. 6	No. 24
	No. 7	No. 25

SRS UNIT CONNECTOR B (39P)

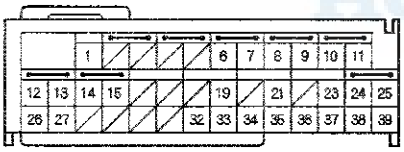

Wire side of female terminals

Is there continuity?

YES—Short in the SRS floor wire harness; replace the SRS floor wire harness. ■

NO—Faulty SRS unit; replace the SRS unit (see page 24-221). ■

DTC 31-3x ("x" can be 0 thru 9 or A thru F): Short to Another Wire or Decreased Resistance in the Driver's Side Airbag Inflator

Special Tools Required
- SRS inflator simulator 07SAZ-TB4011A
- SRS simulator lead L 070AZ-SNAA300
- SRS short canceller 070AZ-SAA0100

NOTE:
- Before doing this troubleshooting procedure, review SRS Precautions and Procedures (see page 24-23), General Troubleshooting Information (see page 24-34), and Battery Terminal Disconnection and Reconnection (see page 22-89).
- 2-door: Before replacing the SRS unit, check the SRS unit software version with the HDS. If the software version is not the latest, update the SRS unit software (see page 24-37) and retest.

1. Clear the DTC memory (see page 24-35).

2. Turn the ignition switch to ON (II), and check that the SRS indicator comes on for about 6 seconds and then goes off.

   Does the SRS indicator stay on, and is DTC 31-3x indicated?

   YES—Go to step 3.

   NO—Intermittent failure, the system is OK at this time. Go to Troubleshooting Intermittent Failures (see page 24-36). If another DTC is indicated, troubleshoot the DTC.

3. Turn the ignition switch to LOCK (0). Disconnect the negative cable from the battery, then wait at least 3 minutes.

(cont'd)

DTC Troubleshooting (cont'd)

4. Disconnect the floor wire harness 2P connector (A) from the driver's side airbag (B).

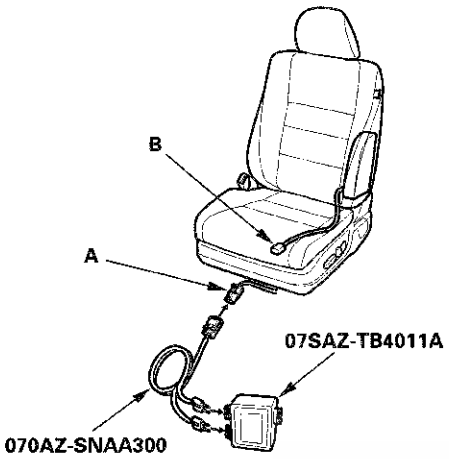

5. Connect the SRS inflator simulator (2 Ω connectors) and simulator lead L to the SRS floor wire harness.

6. Reconnect the negative cable to the battery.

7. Clear the DTC memory.

8. Read the DTC (see page 24-35).

   Is DTC 31-3x indicated?

   YES—Go to step 9.

   NO—Short to another wire in the driver's side airbag inflator; replace the driver's side airbag (see page 24-208).■

9. Turn the ignition switch to LOCK (0). Disconnect the negative cable from the battery, then wait at least 3 minutes.

10. Disconnect SRS unit connector B (39P) from the SRS unit (see step 8 on page 24-33).

11. Disconnect the SRS inflator simulator from the SRS simulator lead. Do not disconnect the simulator lead from the SRS floor wire harness 2P connector.

12. Connect the SRS short cancellers (070AZ-SAA0100) to the terminals No. 6 and No. 7 of SRS unit connector B (39P) (see page 24-30).

13. Measure the resistance between the terminals of the black SRS simulator lead (A). There should be an open circuit or at least 1 MΩ.

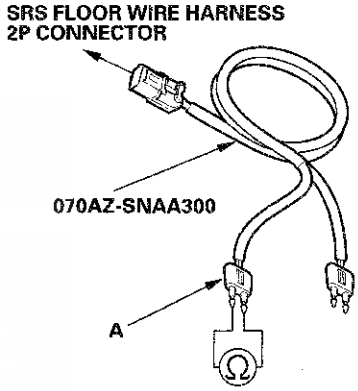

   Is the resistance as specified?

   YES—Faulty SRS unit or poor connection at SRS unit connector B (39P) and the SRS unit. Check the connection; if the connection is OK, replace the SRS unit (see page 24-221).■

   NO—Short in the SRS floor wire harness; replace the SRS floor wire harness.■

DTC 31-8x ("x" can be 0 thru 9 or A thru F): Short to Power in the Driver's Side Airbag Inflator

Special Tools Required
- SRS inflator simulator 07SAZ-TB4011A
- SRS simulator lead L 070AZ-SNAA300

NOTE:
- Before doing this troubleshooting procedure, review SRS Precautions and Procedures (see page 24-23), General Troubleshooting Information (see page 24-34), and Battery Terminal Disconnection and Reconnection (see page 22-89).
- 2-door: Before replacing the SRS unit, check the SRS unit software version with the HDS. If the software version is not the latest, update the SRS unit software (see page 24-37) and retest.

1. Clear the DTC memory (see page 24-35).

2. Turn the ignition switch to ON (II), and check that the SRS indicator comes on for about 6 seconds and then goes off.

   Does the SRS indicator stay on, and is DTC 31-8x indicated?

   YES—Go to step 3.

   NO—Intermittent failure, the system is OK at this time. Go to Troubleshooting Intermittent Failures (see page 24-36). If another DTC is indicated, troubleshoot the DTC.

3. Turn the ignition switch to LOCK (0). Disconnect the negative cable from the battery, then wait at least 3 minutes.

4. Disconnect the SRS floor wire harness 2P connector (A) from the driver's side airbag (B).

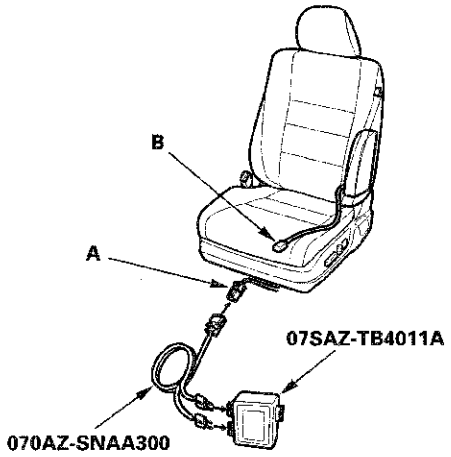

5. Connect the SRS inflator simulator (2 Ω connectors) and simulator lead L to the SRS floor wire harness.

6. Reconnect the negative cable to the battery.

7. Clear the DTC memory.

8. Read the DTC (see page 24-35).

   Is DTC 31-8x indicated?

   YES—Go to step 9.

   NO—Short to power in the driver's side airbag inflator; replace the driver's side airbag (see page 24-208). ■

9. Turn the ignition switch to LOCK (0). Disconnect the negative cable from the battery, then wait at least 3 minutes.

(cont'd)

DTC Troubleshooting (cont'd)

10. Disconnect SRS unit connector B (39P) from the SRS unit (see step 8 on page 24-33).

11. Disconnect the SRS inflator simulator from the SRS simulator lead. Do not disconnect the simulator lead from the SRS floor wire harness 2P connector.

12. Reconnect the negative cable to the battery.

13. Turn the ignition switch to ON (II).

14. Measure the voltage between each terminal of the black SRS simulator lead (A) and body ground. There should be less than 0.2 V.

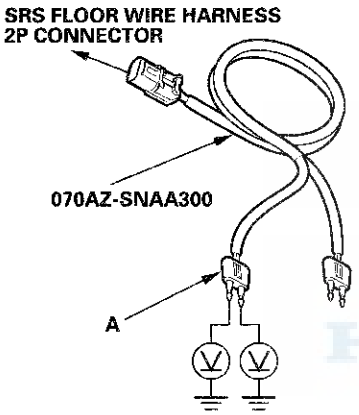

Is the voltage as specified?

YES—Faulty SRS unit or poor connection at SRS unit connector B (39P) and the SRS unit. Check the connection; if the connection is OK, replace the SRS unit (see page 24-221).■

NO—Short to power in the SRS floor wire harness; replace the SRS floor wire harness.■

DTC 31-9x ("x" can be 0 thru 9 or A thru F): Short to Ground in the Driver's Side Airbag Inflator

Special Tools Required
- SRS inflator simulator 07SAZ-TB4011A
- SRS simulator lead L 070AZ-SNAA300

NOTE:
- Before doing this troubleshooting procedure, review SRS Precautions and Procedures (see page 24-23), General Troubleshooting Information (see page 24-34), and Battery Terminal Disconnection and Reconnection (see page 22-89).
- 2-door: Before replacing the SRS unit, check the SRS unit software version with the HDS. If the software version is not the latest, update the SRS unit software (see page 24-37) and retest.

1. Clear the DTC memory (see page 24-35).

2. Turn the ignition switch to ON (II), and check that the SRS indicator comes on for about 6 seconds and then goes off.

   Does the SRS indicator stay on, and is DTC 31-9x indicated?

   YES—Go to step 3.

   NO—Intermittent failure, the system is OK at this time. Go to Troubleshooting Intermittent Failures (see page 24-36). If another DTC is indicated, troubleshoot the DTC.

3. Turn the ignition switch to LOCK (0). Disconnect the negative cable from the battery, then wait at least 3 minutes.

4. Disconnect the SRS floor wire harness 2P connector (A) from the driver's side airbag (B).

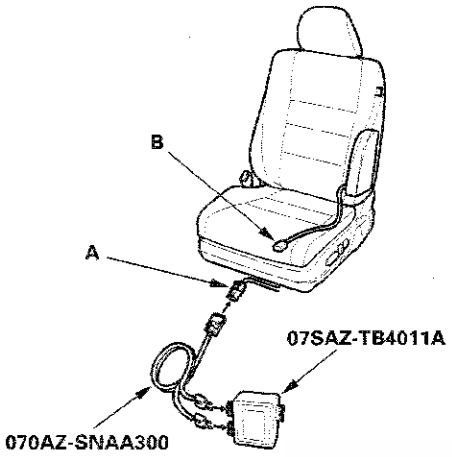

5. Connect the SRS inflator simulator (2 Ω connectors) and simulator lead L to the SRS floor wire harness.

6. Reconnect the negative cable to the battery.

7. Clear the DTC memory.

8. Read the DTC (see page 24-35).

   Is DTC 31-9x indicated?

   YES—Go to step 9.

   NO—Short to ground in the driver's side airbag inflator; replace the driver's side airbag (see page 24-208). ■

9. Turn the ignition switch to LOCK (0). Disconnect the negative cable from the battery, then wait at least 3 minutes.

10. Disconnect SRS unit connector B (39P) from the SRS unit (see step 8 on page 24-33).

11. Disconnect the SRS inflator simulator from the SRS simulator lead. Do not disconnect the simulator lead from the SRS floor wire harness 2P connector.

12. Measure the resistance between each terminal of the black SRS simulator lead (A) and body ground. There should be an open circuit or at least 1 MΩ.

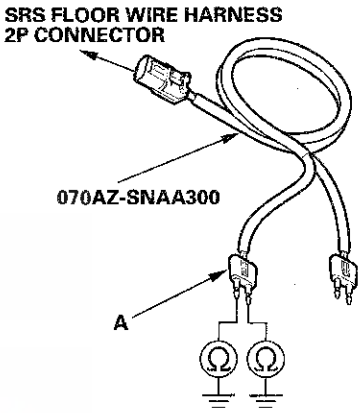

Is the resistance as specified?

YES—Faulty SRS unit or poor connection at SRS unit connector B (39P) and the SRS unit. Check the connection; if the connection is OK, replace the SRS unit (see page 24-221). ■

NO—Short to ground in the SRS floor wire harness; replace the SRS floor wire harness. ■

DTC Troubleshooting (cont'd)

DTC 32-1x ("x" can be 0, 2 thru 9 or A thru F): Open in the Front Passenger's Side Airbag Inflator

Special Tools Required
- SRS inflator simulator 07SAZ-TB4011A
- SRS simulator lead L 070AZ-SNAA300
- SRS short canceller 070AZ-SAA0100

NOTE:
- Before doing this troubleshooting procedure, review SRS Precautions and Procedures (see page 24-23), General Troubleshooting Information (see page 24-34), and Battery Terminal Disconnection and Reconnection (see page 22-89).
- 2-door: Before replacing the SRS unit, check the SRS unit software version with the HDS. If the software version is not the latest, update the SRS unit software (see page 24-37) and retest.

1. Clear the DTC memory (see page 24-35).

2. Turn the ignition switch to ON (II), and check that the SRS indicator comes on for about 6 seconds and then goes off.

   Does the SRS indicator stay on, and is DTC 32-1x indicated?

   YES—Go to step 3.

   NO—Intermittent failure, the system is OK at this time. Go to Troubleshooting Intermittent Failures (see page 24-36). If another DTC is indicated, troubleshoot the DTC.

3. Turn the ignition switch to LOCK (0). Disconnect the negative cable from the battery, then wait at least 3 minutes.

4. Disconnect the SRS floor wire harness 2P connector (A) from the front passenger's side airbag (B).

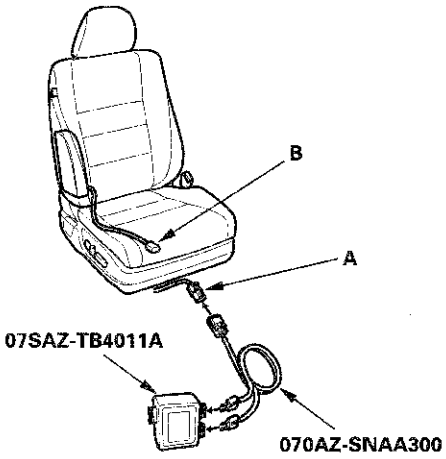

5. Connect the SRS inflator simulator (2 Ω connectors) and simulator lead L to the SRS floor wire harness.

6. Reconnect the negative cable to the battery.

7. Clear the DTC memory.

8. Read the DTC (see page 24-35).

   Is DTC 32-1x indicated?

   YES—Go to step 9.

   NO—Open in the front passenger's side airbag inflator; replace the front passenger's side airbag (see page 24-208). ■

9. Turn the ignition switch to LOCK (0). Disconnect the negative cable from the battery, then wait at least 3 minutes.

10. Disconnect SRS unit connector B (39P) from the SRS unit (see step 8 on page 24-33).

11. Disconnect the SRS inflator simulator from the SRS simulator lead. Do not disconnect the simulator lead from the SRS floor wire harness 2P connector.

12. Connect the SRS short cancellers (070AZ-SAA0100) to the terminals No. 8 and No. 9 of SRS unit connector B (39P) (see page 24-30).

13. Measure the resistance between the terminals of the black SRS simulator lead (A). There should be less than 1.0 Ω.

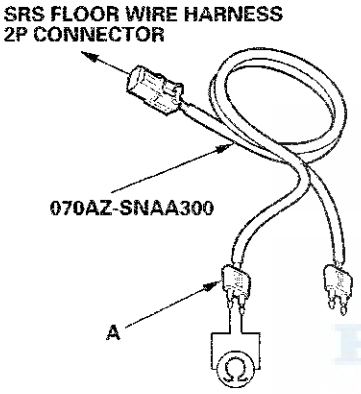

Is the resistance as specified?

YES—Faulty SRS unit or poor connection at SRS unit connector B (39P) and the SRS unit. Check the connection; if the connection is OK, replace the SRS unit (see page 24-221).■

NO—Open in the SRS floor wire harness; replace the SRS floor wire harness.■

DTC 32-11: Short to Another Wire in Front Passenger's Side Airbag Inflator (4-door)

NOTE: Before doing this troubleshooting procedure, review SRS Precautions and Procedures (see page 24-23), General Troubleshooting Information (see page 24-34), and Battery Terminal Disconnection and Reconnection (see page 22-89).

1. Clear the DTC memory (see page 24-35).

2. Turn the ignition switch to ON (II), then wait for 10 seconds.

3. Read the DTC (see page 24-35).

   Is DTC 32-11 indicated?

   YES—Go to step 4.

   NO—Intermittent failure, the system is OK at this time. Go to Troubleshooting Intermittent Failures (see page 24-36). If another DTC is indicated, troubleshoot the DTC.

4. Read the DTC (see page 24-35).

   Is DTC 21-11, 22-11, 31-11, 33-11, or 34-11 indicated with DTC 32-11?

   YES—Go to step 5.

   NO—Short in the SRS floor wire harness; replace the SRS floor wire harness.■

(cont'd)

DTC Troubleshooting (cont'd)

5. Turn the ignition switch to LOCK (0).

6. Disconnect the negative cable from the battery, then wait at least 3 minutes.

7. Disconnect SRS unit connector B (39P) from the SRS unit (see step 8 on page 24-33).

8. Check for continuity between the terminals of SRS unit connector B (39P) according to the table. There should be no continuity.

DTC	From terminal	To terminal
21-11	No. 8	No. 12
	No. 9	No. 13
22-11	No. 8	No. 14
	No. 9	No. 15
31-11	No. 8	No. 6
	No. 9	No. 7
33-11	No. 8	No. 10
	No. 9	No. 11
34-11	No. 8	No. 24
	No. 9	No. 25

SRS UNIT CONNECTOR B (39P)

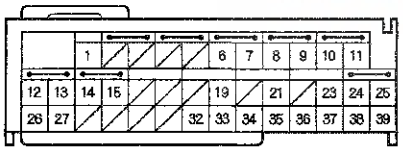

Wire side of female terminals

Is there continuity?

YES—Short in the SRS floor wire harness; replace the SRS floor wire harness. ■

NO—Faulty SRS unit; replace the SRS unit (see page 24-221). ■

DTC 32-3x ("x" can be 0 thru 9 or A thru F): Short to Another Wire or Decreased Resistance in the Front Passenger's Side Airbag Inflator

Special Tools Required
- SRS inflator simulator 07SAZ-TB4011A
- SRS simulator lead L 070AZ-SNAA300
- SRS short canceller 070AZ-SAA0100

NOTE:
- Before doing this troubleshooting procedure, review SRS Precautions and Procedures (see page 24-23), General Troubleshooting Information (see page 24-34), and Battery Terminal Disconnection and Reconnection (see page 22-89).
- 2-door: Before replacing the SRS unit, check the SRS unit software version with the HDS. If the software version is not the latest, update the SRS unit software (see page 24-37) and retest.

1. Clear the DTC memory (see page 24-35).

2. Turn the ignition switch to ON (II), and check that the SRS indicator comes on for about 6 seconds and then goes off.

   Does the SRS indicator stay on, and is DTC 32-3x indicated?

   YES—Go to step 3.

   NO—Intermittent failure, the system is OK at this time. Go to Troubleshooting Intermittent Failures (see page 24-36). If another DTC is indicated, troubleshoot the DTC.

3. Turn the ignition switch to LOCK (0). Disconnect the negative cable from the battery, then wait at least 3 minutes.

4. Disconnect the SRS floor wire harness 2P connector (A) from the front passenger's side airbag (B).

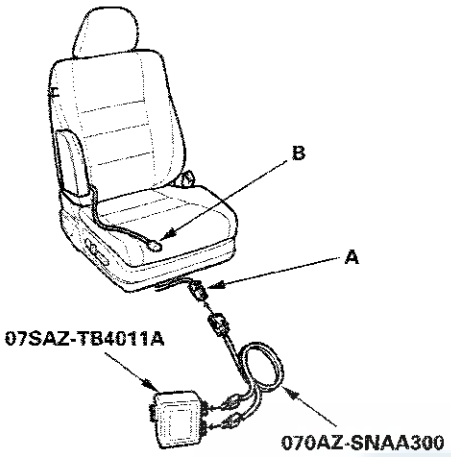

5. Connect the SRS inflator simulator (2 Ω connectors) and simulator lead L to the SRS floor wire harness.

6. Reconnect the negative cable to the battery.

7. Clear the DTC memory.

8. Read the DTC (see page 24-35).

   Is DTC 32-3x indicated?

   YES—Go to step 9.

   NO—Short to another wire in the front passenger's side airbag inflator; replace the front passenger's side airbag (see page 24-208). ■

9. Turn the ignition switch to LOCK (0). Disconnect the negative cable from the battery, then wait at least 3 minutes.

10. Disconnect SRS unit connector B (39P) from the SRS unit (see step 8 on page 24-33).

11. Disconnect the SRS inflator simulator from the SRS simulator lead. Do not disconnect the simulator lead from the SRS floor wire harness 2P connector.

12. Connect the SRS short cancellers (070AZ-SAA0100) to the terminals No. 8 and No. 9 of SRS unit connector B (39P) (see page 24-30).

13. Measure the resistance between the terminals of the black SRS simulator lead (A). There should be an open circuit or at least 1 MΩ.

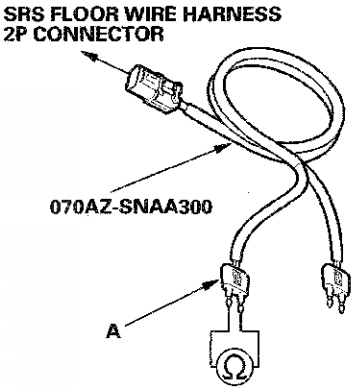

Is the resistance as specified?

YES—Faulty SRS unit or poor connection at SRS unit connector B (39P) and the SRS unit. Check the connection; if the connection is OK, replace the SRS unit (see page 24-221). ■

NO—Short to another wire in the SRS floor wire harness; replace the SRS floor wire harness. ■

DTC Troubleshooting (cont'd)

DTC 32-8x ("x" can be 0 thru 9 or A thru F): Short to Power in the Front Passenger's Side Airbag Inflator

Special Tools Required
- SRS inflator simulator 07SAZ-TB4011A
- SRS simulator lead L 070AZ-SNAA300

NOTE:
- Before doing this troubleshooting procedure, review SRS Precautions and Procedures (see page 24-23), General Troubleshooting Information (see page 24-34), and Battery Terminal Disconnection and Reconnection (see page 22-89).
- 2-door: Before replacing the SRS unit, check the SRS unit software version with the HDS. If the software version is not the latest, update the SRS unit software (see page 24-37) and retest.

1. Clear the DTC memory (see page 24-35).

2. Turn the ignition switch to ON (II), and check that the SRS indicator comes on for about 6 seconds and then goes off.

   Does the SRS indicator stay on, and is DTC 32-8x indicated?

   YES—Go to step 3.

   NO—Intermittent failure, the system is OK at this time. Go to Troubleshooting Intermittent Failures (see page 24-36). If another DTC is indicated, troubleshoot the DTC.

3. Turn the ignition switch to LOCK (0). Disconnect the negative cable from the battery, then wait at least 3 minutes.

4. Disconnect the SRS floor wire harness 2P connector (A) from the front passenger's side airbag (B).

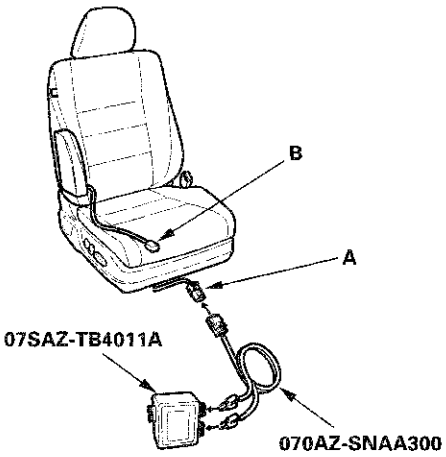

5. Connect the SRS inflator simulator (2 Ω connectors) and simulator lead L to the SRS floor wire harness.

6. Reconnect the negative cable to the battery.

7. Clear the DTC memory.

8. Read the DTC (see page 24-35).

   Is DTC 32-8x indicated?

   YES—Go to step 9.

   NO—Short to power in the front passenger's side airbag inflator; replace the front passenger's side airbag (see page 24-208). ■

9. Turn the ignition switch to LOCK (0). Disconnect the negative cable from the battery, then wait at least 3 minutes.

10. Disconnect SRS unit connector B (39P) from the SRS unit (see step 8 on page 24-33).

11. Disconnect the SRS inflator simulator from the SRS simulator lead. Do not disconnect the simulator lead from the SRS floor wire harness 2P connector.

12. Reconnect the negative cable to the battery.

13. Turn the ignition switch to ON (II).

14. Measure the voltage between each terminal of the black SRS simulator lead (A) and body ground. There should be less than 0.2 V.

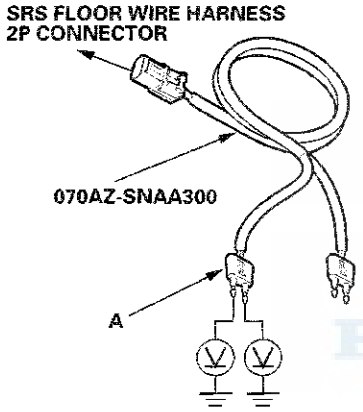

Is the voltage as specified?

YES—Faulty SRS unit or poor connection at SRS unit connector B (39P) and the SRS unit. Check the connection; if the connection is OK, replace the SRS unit (see page 24-221).■

NO—Short to power in the SRS floor wire harness; replace the SRS floor wire harness.■

DTC 32-9x ("x" can be 0 thru 9 or A thru F): Short to Ground in the Front Passenger's Side Airbag Inflator

Special Tools Required
- SRS inflator simulator 07SAZ-TB4011A
- SRS simulator lead L 070AZ-SNAA300

NOTE:
- Before doing this troubleshooting procedure, review SRS Precautions and Procedures (see page 24-23), General Troubleshooting Information (see page 24-34), and Battery Terminal Disconnection and Reconnection (see page 22-89).
- 2-door: Before replacing the SRS unit, check the SRS unit software version with the HDS. If the software version is not the latest, update the SRS unit software (see page 24-37) and retest.

1. Clear the DTC memory (see page 24-35).

2. Turn the ignition switch to ON (II), and check that the SRS indicator comes on for about 6 seconds and then goes off.

   Does the SRS indicator stay on, and is DTC 32-9x indicated?

   YES—Go to step 3.

   NO—Intermittent failure, the system is OK at this time. Go to Troubleshooting Intermittent Failures (see page 24-36). If another DTC is indicated, troubleshoot the DTC.

3. Turn the ignition switch to LOCK (0). Disconnect the negative cable from the battery, then wait at least 3 minutes.

(cont'd)

DTC Troubleshooting (cont'd)

4. Disconnect the SRS floor wire harness 2P connector (A) from the front passenger's side airbag (B).

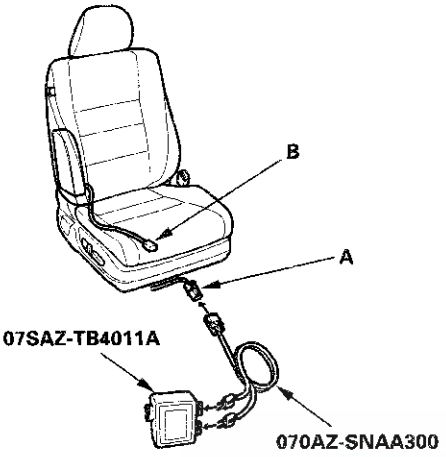

5. Connect the SRS inflator simulator (2 Ω connectors) and simulator lead L to the SRS floor wire harness.

6. Reconnect the negative cable to the battery.

7. Clear the DTC memory.

8. Read the DTC (see page 24-35).

   Is DTC 32-9x indicated?

   YES—Go to step 9.

   NO—Short to ground in the front passenger's side airbag inflator; replace the front passenger's side airbag (see page 24-208). ■

9. Turn the ignition switch to LOCK (0). Disconnect the negative cable from the battery, then wait at least 3 minutes.

10. Disconnect SRS unit connector B (39P) from the SRS unit (see step 8 on page 24-33).

11. Disconnect the SRS inflator simulator from the SRS simulator lead. Do not disconnect the simulator lead from the SRS floor wire harness 2P connector.

12. Measure the resistance between each terminal of the black SRS simulator lead (A) and body ground. There should be an open circuit or at least 1 MΩ.

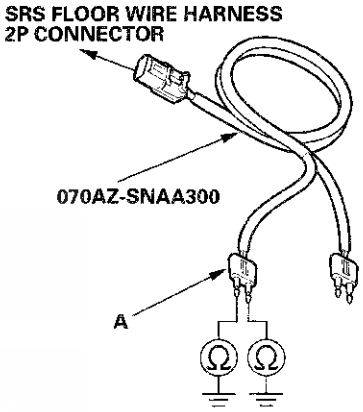

Is the resistance as specified?

YES—Faulty SRS unit or poor connection at SRS unit connector B (39P) and the SRS unit. Check the connection; if the connection is OK, replace the SRS unit (see page 24-221). ■

NO—Short to ground in the SRS floor wire harness; replace the SRS floor wire harness. ■

DTC 33-1x ("x" can be 0, 2 thru 9 or A thru F): Open in the Left Side Curtain Airbag Inflator

Special Tools Required
- SRS inflator simulator 07SAZ-TB4011A
- SRS simulator lead L 070AZ-SNAA300
- SRS short canceller 070AZ-SAA0100

NOTE:
- Before doing this troubleshooting procedure, review SRS Precautions and Procedures (see page 24-23), General Troubleshooting Information (see page 24-34), and Battery Terminal Disconnection and Reconnection (see page 22-89).
- 2-door: Before replacing the SRS unit, check the SRS unit software version with the HDS. If the software version is not the latest, update the SRS unit software (see page 24-37) and retest.

1. Clear the DTC memory (see page 24-35).

2. Turn the ignition switch to ON (II), and check that the SRS indicator comes on for about 6 seconds and then goes off.

   Does the SRS indicator stay on, and is DTC 33-1x indicated?

   YES—Go to step 3.

   NO—Intermittent failure, the system is OK at this time. Go to Troubleshooting Intermittent Failures (see page 24-36). If another DTC is indicated, troubleshoot the DTC.

3. Turn the ignition switch to LOCK (0). Disconnect the negative cable from the battery, then wait at least 3 minutes.

4. Remove the left side C-pillar trim, for 2-door (see page 20-110), for 4-door (see page 20-115), then disconnect the SRS floor wire harness 2P connector (A) from the left side curtain airbag connector (B).

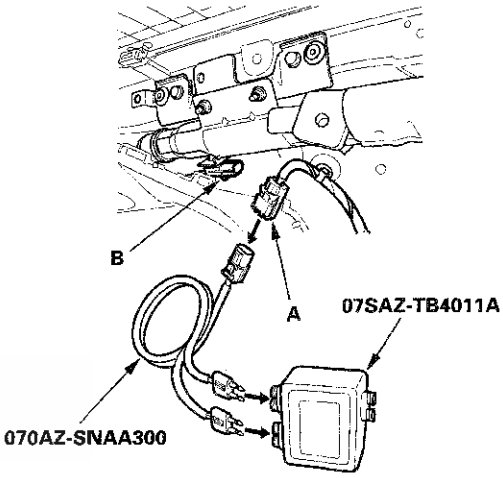

5. Connect the SRS inflator simulator (2 Ω connectors) and simulator lead L to the SRS floor wire harness.

6. Reconnect the negative cable to the battery.

7. Clear the DTC memory.

8. Read the DTC (see page 24-35).

   Is DTC 33-1x indicated?

   YES—Go to step 9.

   NO—Open in the left side curtain airbag; replace the left side curtain airbag (see page 24-209). ■

9. Turn the ignition switch to LOCK (0). Disconnect the negative cable from the battery, then wait at least 3 minutes.

(cont'd)

DTC Troubleshooting (cont'd)

10. Disconnect SRS unit connector B (39P) from the SRS unit (see step 8 on page 24-33).

11. Disconnect the SRS inflator simulator from the SRS simulator lead. Do not disconnect the simulator lead from the SRS floor wire harness 2P connector.

12. Connect the SRS short cancellers (070AZ-SAA0100) to the terminals No. 10 and No. 11 of SRS unit connector B (39P) (see page 24-30).

13. Measure the resistance between the terminals of the black SRS simulator lead (A). There should be less than 1.0 Ω.

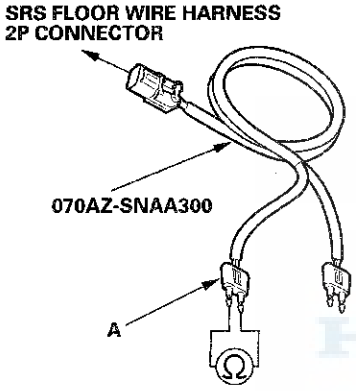

Is the resistance as specified?

YES—Faulty SRS unit or poor connection at the SRS unit connector B (39P) and the SRS unit. Check the connection; if the connection is OK, replace the SRS unit (see page 24-221). ■

NO—Open in the SRS floor wire harness; replace the SRS floor wire harness. ■

DTC 33-11: Short to Another Wire in the Left Side Curtain Airbag Inflator (4-door)

NOTE: Before doing this troubleshooting procedure, review SRS Precautions and Procedures (see page 24-23), General Troubleshooting Information (see page 24-34), and Battery Terminal Disconnection and Reconnection (see page 22-89).

1. Clear the DTC memory (see page 24-35).

2. Turn the ignition switch to ON (II), then wait for 10 seconds.

3. Read the DTC (see page 24-35).

   Is DTC 33-11 indicated?

   YES—Go to step 4.

   NO—Intermittent failure, the system is OK at this time. Go to Troubleshooting Intermittent Failures (see page 24-36). If another DTC is indicated, troubleshoot the DTC.

4. Read the DTC (see page 24-35).

   Is DTC 21-11, 22-11, 31-11, 32-11, or 34-11 indicated with DTC 33-11?

   YES—Go to step 5.

   NO—Short in the SRS floor wire harness; replace the SRS floor wire harness. ■

5. Turn the ignition switch to LOCK (0).

6. Disconnect the negative cable from the battery, then wait at least 3 minutes.

7. Disconnect SRS unit connector B (39P) from the SRS unit (see step 8 on page 24-33).

8. Check for continuity between the terminals of SRS unit connector B (39P) according to the table. There should be no continuity.

DTC	From terminal	To terminal
21-11	No. 10	No. 12
	No. 11	No. 13
22-11	No. 10	No. 14
	No. 11	No. 15
31-11	No. 10	No. 6
	No. 11	No. 7
32-11	No. 10	No. 8
	No. 11	No. 9
34-11	No. 10	No. 24
	No. 11	No. 25

SRS UNIT CONNECTOR B (39P)

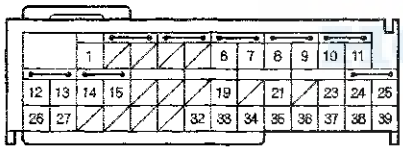

Wire side of female terminals

Is there continuity?

YES—Short in the SRS floor wire harness; replace the SRS floor wire harness.■

NO—Faulty SRS unit; replace the SRS unit (see page 24-221).■

DTC 33-3x ("x" can be 0 thru 9 or A thru F): Short to Another Wire or Decreased Resistance in the Left Side Curtain Airbag Inflator

Special Tools Required
- SRS inflator simulator 07SAZ-TB4011A
- SRS simulator lead L 070AZ-SNAA300
- SRS short canceller 070AZ-SAA0100

NOTE:
- Before doing this troubleshooting procedure, review SRS Precautions and Procedures (see page 24-23), General Troubleshooting Information (see page 24-34), and Battery Terminal Disconnection and Reconnection (see page 22-89).
- 2-door: Before replacing the SRS unit, check the SRS unit software version with the HDS. If the software version is not the latest, update the SRS unit software (see page 24-37) and retest.

1. Clear the DTC memory (see page 24-35).

2. Turn the ignition switch to ON (II), and check that the SRS indicator comes on for about 6 seconds and then goes off.

   Does the SRS indicator stay on, and is DTC 33-3x indicated?

   YES—Go to step 3.

   NO—Intermittent failure, the system is OK at this time. Go to Troubleshooting Intermittent Failures (see page 24-36). If another DTC is indicated, troubleshoot the DTC.

3. Turn the ignition switch to LOCK (0). Disconnect the negative cable from the battery, then wait at least 3 minutes.

(cont'd)

DTC Troubleshooting (cont'd)

4. Remove the left side C-pillar trim, for 2-door (see page 20-110), for 4-door (see page 20-115), then disconnect the SRS floor wire harness 2P connector (A) from the left side curtain airbag connector (B).

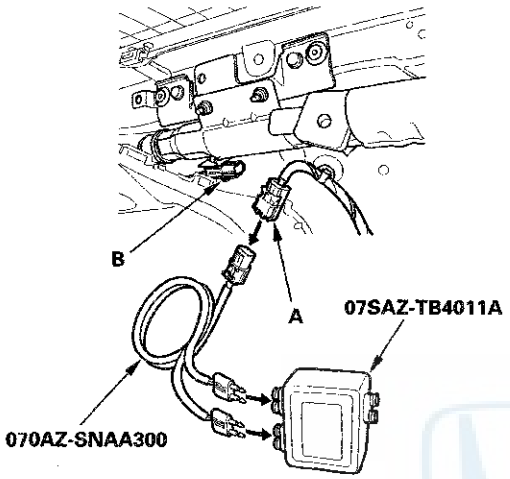

5. Connect the SRS inflator simulator (2 Ω connectors) and simulator lead L to the SRS floor wire harness.

6. Reconnect the negative cable to the battery.

7. Clear the DTC memory.

8. Read the DTC (see page 24-35).

   Is DTC 33-3x indicated?

   YES—Go to step 9.

   NO—Short to another wire in the left side curtain airbag inflator; replace the left side curtain airbag (see page 24-209).■

9. Turn the ignition switch to LOCK (0). Disconnect the negative cable from the battery, then wait at least 3 minutes.

10. Disconnect SRS unit connector B (39P) from the SRS unit (see step 8 on page 24-33).

11. Disconnect the SRS inflator simulator from the SRS simulator lead. Do not disconnect the simulator lead from the SRS floor wire harness 2P connector.

12. Connect the SRS short cancellers (070AZ-SAA0100) to the terminals No. 10 and No. 11 of SRS unit connector B (39P) (see page 24-30).

13. Measure the resistance between the terminals of the black SRS simulator lead (A). There should be an open circuit or at least 1 MΩ.

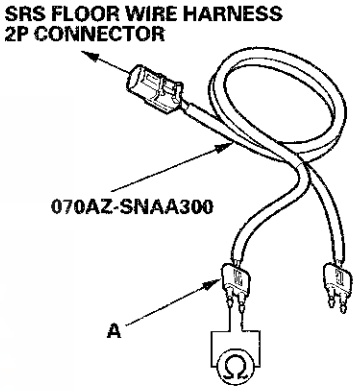

   Is the resistance as specified?

   YES—Faulty SRS unit or poor connection at SRS unit connector B (39P) and the SRS unit. Check the connection; if the connection is OK, replace the SRS unit (see page 24-221).■

   NO—Short to another wire in the SRS floor wire harness; replace the SRS floor wire harness.■

DTC 33-8x ("x" can be 0 thru 9 or A thru F): Short to Power in the Left Side Curtain Airbag Inflator

Special Tools Required
- SRS inflator simulator 07SAZ-TB4011A
- SRS simulator lead L 070AZ-SNAA300

NOTE:
- Before doing this troubleshooting procedure, review SRS Precautions and Procedures (see page 24-23), General Troubleshooting Information (see page 24-34), and Battery Terminal Disconnection and Reconnection (see page 22-89).
- 2-door: Before replacing the SRS unit, check the SRS unit software version with the HDS. If the software version is not the latest, update the SRS unit software (see page 24-37) and retest.

1. Clear the DTC memory (see page 24-35).

2. Turn the ignition switch to ON (II), and check that the SRS indicator comes on for about 6 seconds and then goes off.

   Does the SRS indicator stay on, and is DTC 33-8x indicated?

   YES—Go to step 3.

   NO—Intermittent failure, the system is OK at this time. Go to Troubleshooting Intermittent Failures (see page 24-36). If another DTC is indicated, troubleshoot the DTC.

3. Turn the ignition switch to LOCK (0). Disconnect the negative cable from the battery, then wait at least 3 minutes.

4. Remove the left side C-pillar trim, for 2-door (see page 20-110), for 4-door (see page 20-115), then disconnect the SRS floor wire harness 2P connector (A) from the left side curtain airbag connector (B).

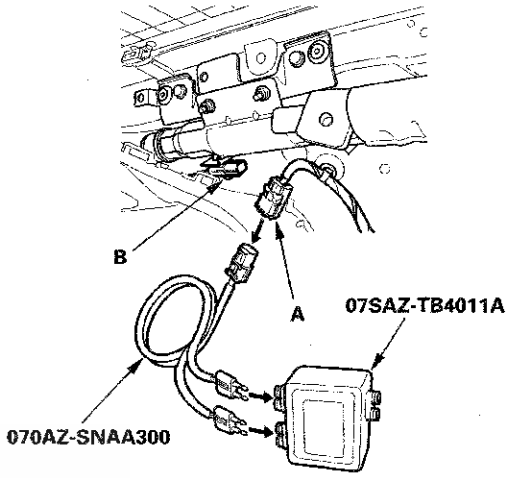

5. Connect the SRS inflator simulator (2 Ω connectors) and simulator lead L to the SRS floor wire harness.

6. Reconnect the negative cable to the battery.

7. Clear the DTC memory.

8. Read the DTC (see page 24-35).

   Is DTC 33-8x indicated?

   YES—Go to step 9.

   NO—Short to power in the left side curtain airbag inflator; replace the left side curtain airbag (see page 24-209).■

9. Turn the ignition switch to LOCK (0). Disconnect the negative cable from the battery, then wait at least 3 minutes.

(cont'd)

DTC Troubleshooting (cont'd)

10. Disconnect the SRS unit connector B (39P) from the SRS unit (see step 8 on page 24-33).

11. Disconnect the SRS inflator simulator from the SRS simulator lead. Do not disconnect the simulator lead from the SRS floor wire harness 2P connector.

12. Reconnect the negative cable to the battery.

13. Turn the ignition switch to ON (II).

14. Measure the voltage between each terminal of the black SRS simulator lead (A) and body ground. There should be less than 0.2 V.

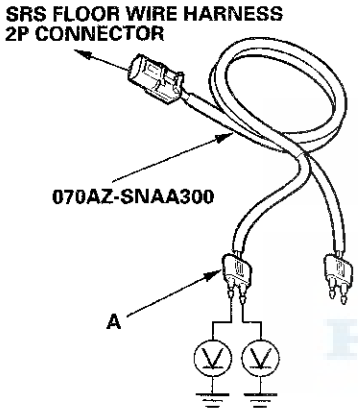

Is the voltage as specified?

YES—Faulty SRS unit or poor connection at SRS unit connector B (39P) and the SRS unit. Check the connection; if the connection is OK, replace the SRS unit (see page 24-221).■

NO—Short to power in the SRS floor wire harness; replace the SRS floor wire harness.■

DTC 33-9x ("x" can be 0 thru 9 or A thru F): Short to Ground in the Left Side Curtain Airbag Inflator

Special Tools Required
- SRS inflator simulator 07SAZ-TB4011A
- SRS simulator lead L 070AZ-SNAA300

NOTE:
- Before doing this troubleshooting procedure, review SRS Precautions and Procedures (see page 24-23), General Troubleshooting Information (see page 24-34), and Battery Terminal Disconnection and Reconnection (see page 22-89).
- 2-door: Before replacing the SRS unit, check the SRS unit software version with the HDS. If the software version is not the latest, update the SRS unit software (see page 24-37) and retest.

1. Clear the DTC memory (see page 24-35).

2. Turn the ignition switch to ON (II), and check that the SRS indicator comes on for about 6 seconds and then goes off.

   Does the SRS indicator stay on, and is DTC 33-9x indicated?

   YES—Go to step 3.

   NO—Intermittent failure, the system is OK at this time. Go to Troubleshooting Intermittent Failures (see page 24-36). If another DTC is indicated, troubleshoot the DTC.

3. Turn the ignition switch to LOCK (0). Disconnect the negative cable from the battery, then wait at least 3 minutes.

4. Remove the left side C-pillar trim, for 2-door (see page 20-110), for 4-door (see page 20-115), then disconnect the SRS floor wire harness 2P connector (A) from the left side curtain airbag connector (B).

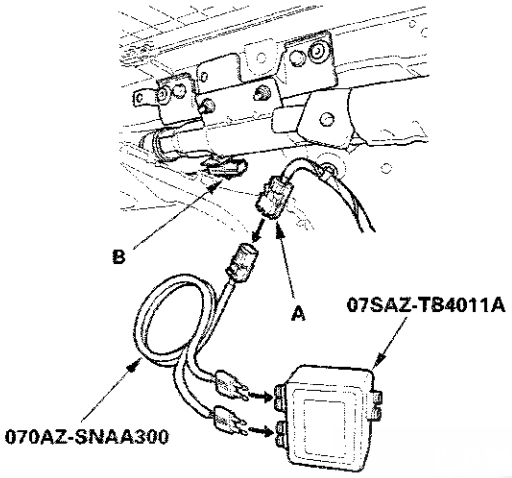

5. Connect the SRS inflator simulator (2 Ω connectors) and simulator lead L to the SRS floor wire harness.

6. Reconnect the negative cable to the battery.

7. Clear the DTC memory.

8. Read the DTC (see page 24-35).

   Is DTC 33-9x indicated?

   YES—Go to step 9.

   NO—Short to ground in the left side curtain airbag inflator; replace the left side curtain airbag (see page 24-209).■

9. Turn the ignition switch to LOCK (0). Disconnect the negative cable from the battery, then wait at least 3 minutes.

10. Disconnect SRS unit connector B (39P) from the SRS unit (see step 8 on page 24-33).

11. Disconnect the SRS inflator simulator from the SRS simulator lead. Do not disconnect the simulator lead from the SRS floor wire harness 2P connector.

12. Measure the resistance between each terminal of the black SRS simulator lead (A) and body ground. There should be an open circuit or at least 1 MΩ.

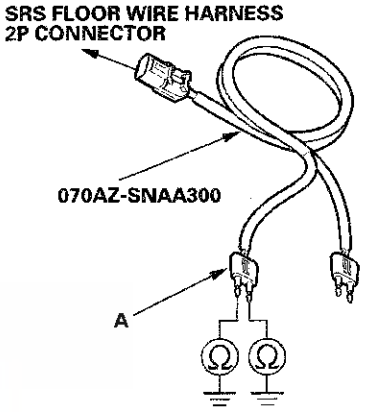

Is the resistance as specified?

YES—Faulty SRS unit or poor connection at SRS unit connector B (39P) and the SRS unit. Check the connection; if the connection is OK, replace the SRS unit (see page 24-221).■

NO—Short to ground in the SRS floor wire harness; replace the SRS floor wire harness.■

DTC Troubleshooting (cont'd)

DTC 34-1x ("x" can be 0, 2 thru 9 or A thru F): Open in the Right Side Curtain Airbag Inflator

Special Tools Required
- SRS inflator simulator 07SAZ-TB4011A
- SRS simulator lead L 070AZ-SNAA300
- SRS short canceller 070AZ-SAA0100

NOTE:
- Before doing this troubleshooting procedure, review SRS Precautions and Procedures (see page 24-23), General Troubleshooting Information (see page 24-34), and Battery Terminal Disconnection and Reconnection (see page 22-89).
- 2-door: Before replacing the SRS unit, check the SRS unit software version with the HDS. If the software version is not the latest, update the SRS unit software (see page 24-37) and retest.

1. Clear the DTC memory (see page 24-35).

2. Turn the ignition switch to ON (II), and check that the SRS indicator comes on for about 6 seconds and then goes off.

   Does the SRS indicator stay on, and is DTC 34-1x indicated?

   YES—Go to step 3.

   NO—Intermittent failure, the system is OK at this time. Go to Troubleshooting Intermittent Failures (see page 24-36). If another DTC is indicated, troubleshoot the DTC.

3. Turn the ignition switch to LOCK (0). Disconnect the negative cable from the battery, then wait at least 3 minutes.

4. Remove the right side C-pillar trim, for 2-door (see page 20-110), for 4-door (see page 20-115), then disconnect the SRS floor wire harness 2P connector (A) from the right side curtain airbag connector (B).

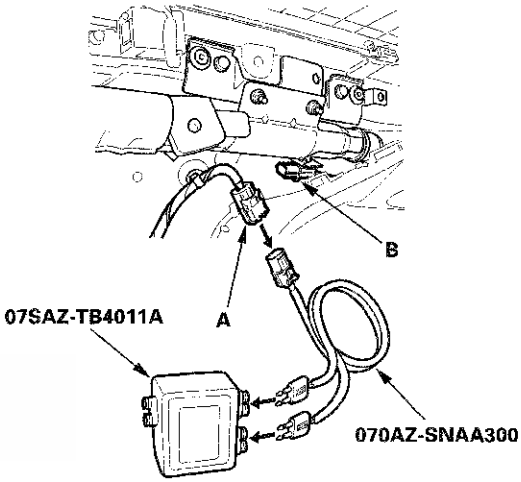

5. Connect the SRS inflator simulator (2 Ω connectors) and simulator lead L to the SRS floor wire harness.

6. Reconnect the negative cable to the battery.

7. Clear the DTC memory.

8. Read the DTC (see page 24-35).

   Is DTC 34-1x indicated?

   YES—Go to step 9.

   NO—Open in the right side curtain airbag inflator, replace the right side curtain airbag (see page 24-209). ■

9. Turn the ignition switch to LOCK (0). Disconnect the negative cable from the battery, then wait at least 3 minutes.

10. Disconnect SRS unit connector B (39P) from the SRS unit (see step 8 on page 24-33).

11. Disconnect the SRS inflator simulator from the SRS simulator lead. Do not disconnect the simulator lead from the SRS floor wire harness 2P connector.

12. Connect the SRS short cancellers (070AZ-SAA0100) to the terminals No. 24 and No. 25 of SRS unit connector B (39P) (see page 24-30).

13. Measure the resistance between the terminals of the black SRS simulator lead (A). There should be less than 1.0 Ω.

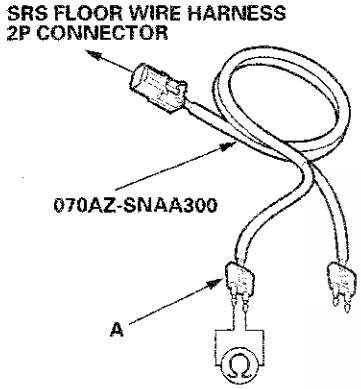

Is the resistance as specified?

YES—Faulty SRS unit or poor connection at SRS unit connector B (39P) and the SRS unit. Check the connection; if the connection is OK, replace the SRS unit (see page 24-221).■

NO—Open in the SRS floor wire harness; replace the SRS floor wire harness.■

DTC 34-11: Short to Another Wire in the Right Side Curtain Airbag Inflator (4-door)

NOTE: Before doing this troubleshooting procedure, review SRS Precautions and Procedures (see page 24-23), General Troubleshooting Information (see page 24-34), and Battery Terminal Disconnection and Reconnection (see page 22-89).

1. Clear the DTC memory (see page 24-35).

2. Turn the ignition switch to ON (II), then wait for 10 seconds.

3. Read the DTC (see page 24-35).

   Is DTC 34-11 indicated?

   YES—Go to step 4.

   NO—Intermittent failure, the system is OK at this time. Go to Troubleshooting Intermittent Failures (see page 24-36). If another DTC is indicated, troubleshoot the DTC.

4. Read the DTC (see page 24-35).

   Is DTC 21-11, 22-11, 31-11, 32-11, or 33-11 indicated with DTC 34-11?

   YES—Go to step 5.

   NO—Short in the SRS floor wire harness; replace the SRS floor wire harness.■

(cont'd)

DTC Troubleshooting (cont'd)

5. Turn the ignition switch to LOCK (0).

6. Disconnect the negative cable from the battery, then wait at least 3 minutes.

7. Disconnect SRS unit connector B (39P) from the SRS unit (see step 8 on page 24-33).

8. Check for continuity between the terminals of SRS unit connector B (39P) according to the table. There should be no continuity.

DTC	From terminal	To terminal
21-11	No. 24	No. 12
	No. 25	No. 13
22-11	No. 24	No. 14
	No. 25	No. 15
31-11	No. 24	No. 6
	No. 25	No. 7
32-11	No. 24	No. 8
	No. 25	No. 9
33-11	No. 24	No. 10
	No. 25	No. 11

SRS UNIT CONNECTOR B (39P)

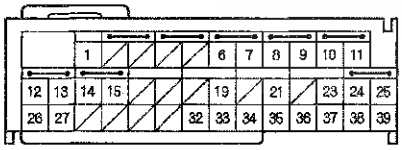

Wire side of female terminals

Is there continuity?

YES—Short in the SRS floor wire harness; replace the SRS floor wire harness.■

NO—Faulty SRS unit; replace the SRS unit (see page 24-221).■

DTC 34-3x ("x" can be 0 thru 9 or A thru F): Short to Another Wire or Decreased Resistance in the Right Side Curtain Airbag Inflator

Special Tools Required
- SRS inflator simulator 07SAZ-TB4011A
- SRS simulator lead L 070AZ-SNAA300
- SRS short canceller 070AZ-SAA0100

NOTE:
- Before doing this troubleshooting procedure, review SRS Precautions and Procedures (see page 24-23), General Troubleshooting Information (see page 24-34), and Battery Terminal Disconnection and Reconnection (see page 22-89).
- 2-door: Before replacing the SRS unit, check the SRS unit software version with the HDS. If the software version is not the latest, update the SRS unit software (see page 24-37) and retest.

1. Clear the DTC memory (see page 24-35).

2. Turn the ignition switch to ON (II), and check that the SRS indicator comes on for about 6 seconds and then goes off.

   Does the SRS indicator stay on, and is DTC 34-3x indicated?

   YES—Go to step 3.

   NO—Intermittent failure, the system is OK at this time. Go to Troubleshooting Intermittent Failures (see page 24-36). If another DTC is indicated, troubleshoot the DTC.

3. Turn the ignition switch to LOCK (0). Disconnect the negative cable from the battery, then wait at least 3 minutes.

4. Remove the right side C-pillar trim, for 2-door (see page 20-110), for 4-door (see page 20-115), then disconnect the SRS floor wire harness 2P connector (A) from the right side curtain airbag connector (B).

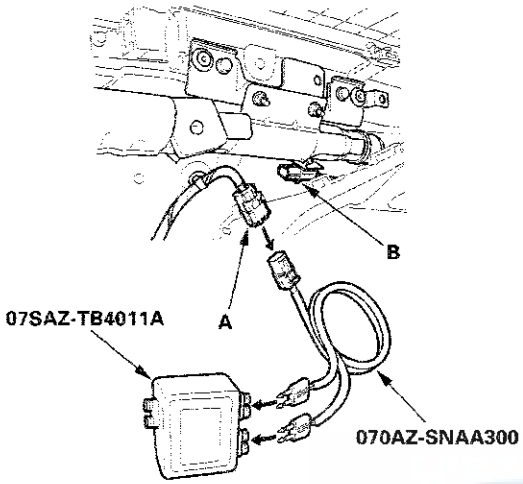

5. Connect the SRS inflator simulator (2 Ω connectors) and simulator lead L to the SRS floor wire harness.

6. Reconnect the negative cable to the battery.

7. Clear the DTC memory.

8. Read the DTC (see page 24-35).

   Is DTC 34-3x indicated?

   YES—Go to step 9.

   NO—Short to another wire in the right side curtain airbag inflator; replace the right side curtain airbag (see page 24-209).■

9. Turn the ignition switch to LOCK (0). Disconnect the negative cable from the battery, then wait at least 3 minutes.

10. Disconnect SRS unit connector B (39P) from the SRS unit (see step 8 on page 24-33).

11. Disconnect the SRS inflator simulator from the SRS simulator lead. Do not disconnect the simulator lead from the SRS floor wire harness 2P connector.

12. Connect the SRS short cancellers (070AZ-SAA0100) to the terminals No. 24 and No. 25 of SRS unit connector B (39P) (see page 24-30).

13. Measure the resistance between the terminals of the black SRS simulator lead (A). There should be an open circuit or at least 1 MΩ.

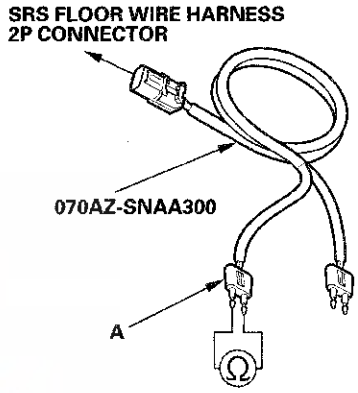

Is the resistance as specified?

YES—Faulty SRS unit or poor connection at SRS unit connector B (39P) and the SRS unit. Check the connection; if the connection is OK, replace the SRS unit (see page 24-221).■

NO—Short to another wire in the SRS floor wire harness; replace the SRS floor wire harness.■

DTC Troubleshooting (cont'd)

DTC 34-8x ("x" can be 0 thru 9 or A thru F): Short to Power in the Right Side Curtain Airbag Inflator

Special Tools Required
- SRS inflator simulator 07SAZ-TB4011A
- SRS simulator lead L 070AZ-SNAA300

NOTE:
- Before doing this troubleshooting procedure, review SRS Precautions and Procedures (see page 24-23), General Troubleshooting Information (see page 24-34), and Battery Terminal Disconnection and Reconnection (see page 22-89).
- 2-door: Before replacing the SRS unit, check the SRS unit software version with the HDS. If the software version is not the latest, update the SRS unit software (see page 24-37) and retest.

1. Clear the DTC memory (see page 24-35).

2. Turn the ignition switch to ON (II), and check that the SRS indicator comes on for about 6 seconds and then goes off.

   Does the SRS indicator stay on, and is DTC 34-8x indicated?

   YES—Go to step 3.

   NO—Intermittent failure, the system is OK at this time. Go to Troubleshooting Intermittent Failures (see page 24-36). If another DTC is indicated, troubleshoot the DTC.

3. Turn the ignition switch to LOCK (0). Disconnect the negative cable from the battery, then wait at least 3 minutes.

4. Remove the right side C-pillar trim, for 2-door (see page 20-110), for 4-door (see page 20-115), then disconnect the SRS floor wire harness 2P connector (A) from the right side curtain airbag connector (B).

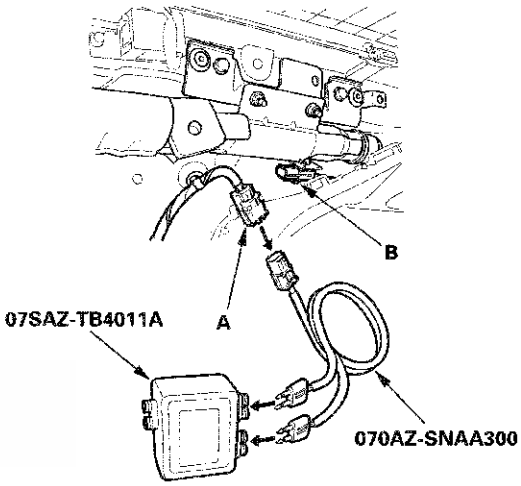

5. Connect the SRS inflator simulator (2 Ω connectors) and simulator lead L to the SRS floor wire harness.

6. Reconnect the negative cable to the battery.

7. Clear the DTC memory.

8. Read the DTC (see page 24-35).

   Is DTC 34-8x indicated?

   YES—Go to step 9.

   NO—Short to power in the right side curtain airbag inflator; replace the right side curtain airbag (see page 24-209).■

9. Turn the ignition switch to LOCK (0). Disconnect the negative cable from the battery, then wait at least 3 minutes.

10. Disconnect SRS unit connector B (39P) from the SRS unit (see step 8 on page 24-33).

11. Disconnect the SRS inflator simulator from the SRS simulator lead. Do not disconnect the simulator lead from the SRS floor wire harness 2P connector.

12. Reconnect the negative cable to the battery.

13. Turn the ignition switch to ON (II).

14. Measure the voltage between each terminal of the black SRS simulator lead (A) and body ground. There should be less than 0.2 V.

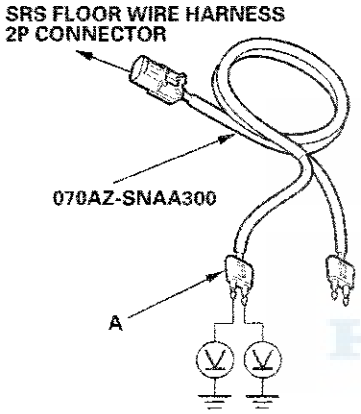

Is the voltage as specified?

YES—Faulty SRS unit or poor connection at SRS unit connector B (39P) and the SRS unit. Check the connection; if the connection is OK, replace the SRS unit (see page 24-221).■

NO—Short to power in the SRS floor wire harness; replace the SRS floor wire harness.■

DTC 34-9x ("x" can be 0 thru 9 or A thru F): Short to Ground in the Right Side Curtain Airbag Inflator

Special Tools Required
- SRS inflator simulator 07SAZ-TB4011A
- SRS simulator lead L 070AZ-SNAA300

NOTE:
- Before doing this troubleshooting procedure, review SRS Precautions and Procedures (see page 24-23), General Troubleshooting Information (see page 24-34), and Battery Terminal Disconnection and Reconnection (see page 22-89).
- 2-door: Before replacing the SRS unit, check the SRS unit software version with the HDS. If the software version is not the latest, update the SRS unit software (see page 24-37) and retest.

1. Clear the DTC memory (see page 24-35).

2. Turn the ignition switch to ON (II), and check that the SRS indicator comes on for about 6 seconds and then goes off.

   Does the SRS indicator stay on, and is DTC 34-9x indicated?

   YES—Go to step 3.

   NO—Intermittent failure, the system is OK at this time. Go to Troubleshooting Intermittent Failures (see page 24-36). If another DTC is indicated, troubleshoot the DTC.

3. Turn the ignition switch to LOCK (0). Disconnect the negative cable from the battery, then wait at least 3 minutes.

(cont'd)

DTC Troubleshooting (cont'd)

4. Remove the right side C-pillar trim, for 2-door (see page 20-110), for 4-door (see page 20-115), then disconnect the SRS floor wire harness 2P connector (A) from the right side curtain airbag connector (B).

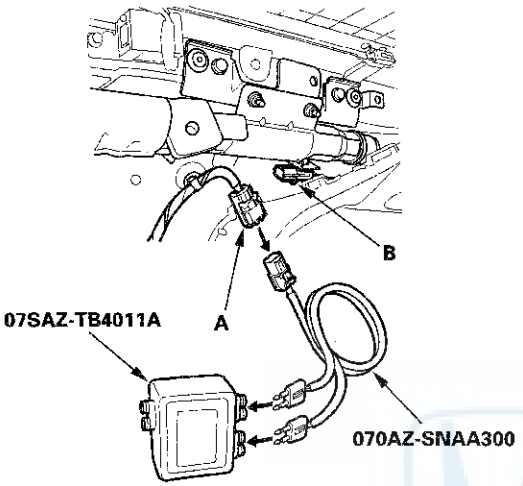

5. Connect the SRS inflator simulator (2 Ω connectors) and simulator lead L to the SRS floor wire harness.

6. Reconnect the negative cable to the battery.

7. Clear the DTC memory.

8. Read the DTC (see page 24-35).

   Is DTC 34-9x indicated?

   YES—Go to step 9.

   NO—Short to ground in the right side curtain airbag inflator; replace the right side curtain airbag (see page 24-209). ■

9. Turn the ignition switch to LOCK (0). Disconnect the negative cable from the battery, then wait at least 3 minutes.

10. Disconnect SRS unit connector B (39P) from the SRS unit (see step 8 on page 24-33).

11. Disconnect the SRS inflator simulator from the SRS simulator lead. Do not disconnect the simulator lead from the SRS floor wire harness 2P connector.

12. Measure the resistance between each terminal of the black SRS simulator lead (A) and body ground. There should be an open circuit or at least 1 MΩ.

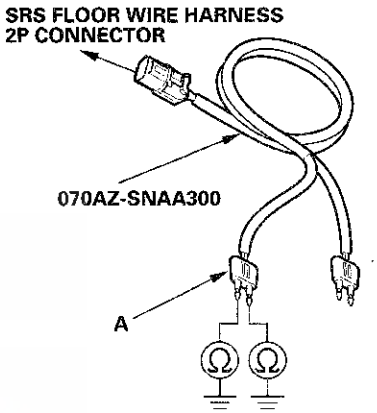

Is the resistance as specified?

YES—Faulty SRS unit or poor connection at SRS unit connector B (39P) and the SRS unit. Check the connection; if the connection is OK, replace the SRS unit (see page 24-221). ■

NO—Short to ground in the SRS floor wire harness; replace the SRS floor wire harness. ■

DTC 41-1x ("x" can be 0 thru 9 or A thru F): No Signal From the Left Front Impact Sensor

Special Tools Required
- SRS inflator simulator 07SAZ-TB4011A
- SRS simulator lead L 070AZ-SNAA300

NOTE:
- Before doing this troubleshooting procedure, review SRS Precautions and Procedures (see page 24-23), General Troubleshooting Information (see page 24-34), and Battery Terminal Disconnection and Reconnection (see page 22-89).
- 2-door: Before replacing the SRS unit, check the SRS unit software version with the HDS. If the software version is not the latest, update the SRS unit software (see page 24-37) and retest.

1. Clear the DTC memory (see page 24-35).

2. Turn the ignition switch to ON (II), then wait for 10 seconds.

3. Read the DTC (see page 24-35).

   Is DTC 41-1x indicated?

   YES—Go to step 4.

   NO—Intermittent failure, the system is OK at this time. Go to Troubleshooting Intermittent Failures (see page 24-36). If another DTC is indicated, troubleshoot the DTC.

4. Turn the ignition switch to LOCK (0).

5. Disconnect the negative cable from the battery, then wait at least 3 minutes.

6. Check the connections between SRS unit connector A (39P) and the SRS unit, between the left engine compartment wire harness 2P connector and the left front impact sensor (see page 24-231), and at connector C303 (see page 22-30).

   Are the connections OK?

   YES—Go to step 7.

   NO—Repair the poor connections and retest.

7. Disconnect SRS unit connector A (39P) from the SRS unit (see step 8 on page 24-33).

8. Disconnect the left engine compartment wire harness 2P connector from the left front impact sensor (see page 24-231).

9. Measure the resistance between SRS unit connector A (39P) terminals No. 36 and No. 37. There should be an open circuit or a least 1 MΩ.

SRS UNIT CONNECTOR A (39P)

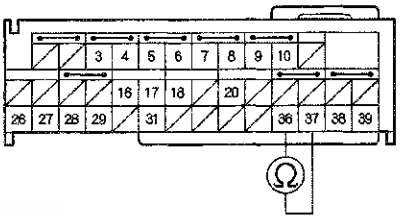

Wire side of female terminals

Is the resistance as specified?

YES—Go to step 10.

NO—Short in the left engine compartment wire harness or dashboard wire harness; replace the faulty harness. ■

(cont'd)

DTC Troubleshooting (cont'd)

10. Measure the resistance between the terminal No. 36 of SRS unit connector A (39P) and body ground, and between the terminal No. 37 and body ground. There should be an open circuit or at least 1 MΩ.

SRS UNIT CONNECTOR A (39P)

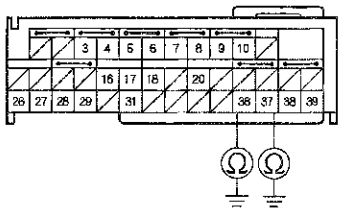

Wire side of female terminals

Is the resistance as specified?

YES—Go to step 11.

NO—Short to ground in the left engine compartment wire harness or dashboard wire harness; replace the faulty harness.■

11. Reconnect the negative cable to the battery.

12. Turn the ignition switch to ON (II).

13. Measure the voltage between the terminal No. 36 of SRS unit connector A (39P) and body ground, and between the terminal No. 37 and body ground. There should be less than 0.2 V.

SRS UNIT CONNECTOR A (39P)

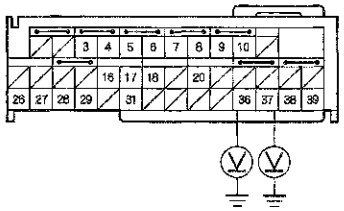

Wire side of female terminals

Is the voltage as specified?

YES—Go to step 14.

NO—Short to power in the left engine compartment wire harness or dashboard wire harness; replace the faulty harness.■

14. Turn the ignition switch to LOCK (0).

15. Connect the SRS inflator simulator (jumper connector) and the black lead (A) of simulator lead L to the left engine compartment wire harness 2P connector (B).

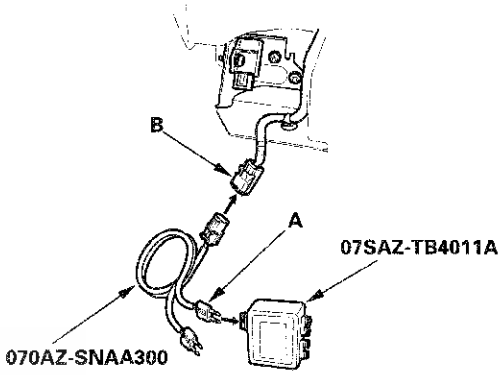

16. Measure the resistance between the terminals No. 36 and No. 37 of SRS unit connector A (39P). There should be less than 1.0 Ω.

SRS UNIT CONNECTOR A (39P)

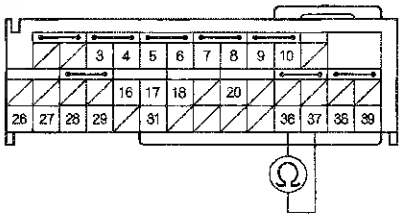

Wire side of female terminals

Is the resistance as specified?

YES—Faulty left front impact sensor or SRS unit; replace the left front impact sensor (see page 24-231). If the problem is still present, replace the SRS unit (see page 24-221).■

NO—Open in the left engine compartment wire harness or dashboard wire harness; replace the faulty harness.■

DTC 42-1x ("x" can be 0 thru 9 or A thru F): No Signal From the Right Front Impact Sensor

Special Tools Required
- SRS inflator simulator 07SAZ-TB4011A
- SRS simulator lead L 070AZ-SNAA300

NOTE:
- Before doing this troubleshooting procedure, review SRS Precautions and Procedures (see page 24-23), General Troubleshooting Information (see page 24-34), and Battery Terminal Disconnection and Reconnection (see page 22-89).
- 2-door: Before replacing the SRS unit, check the SRS unit software version with the HDS. If the software version is not the latest, update the SRS unit software (see page 24-37) and retest.

1. Clear the DTC memory (see page 24-35).

2. Turn the ignition switch to ON (II), then wait for 10 seconds.

3. Read the DTC (see page 24-35).

   Is DTC 42-1x indicated?

   YES—Go to step 4.

   NO—Intermittent failure, the system is OK at this time. Go to Troubleshooting Intermittent Failures (see page 24-36). If another DTC is indicated, troubleshoot the DTC.

4. Turn the ignition switch to LOCK (0).

5. Disconnect the negative cable from the battery, then wait at least 3 minutes.

6. Check the connections between SRS unit connector A (39P) and the SRS unit, between the right engine compartment wire harness 2P connector and the right front impact sensor (see page 24-231), and at connector C203 (see page 22-26).

   Are the connections OK?

   YES—Go to step 7.

   NO—Repair the poor connections and retest.

7. Disconnect SRS unit connector A (39P) from the SRS unit (see step 8 on page 24-33).

8. Disconnect the right engine compartment wire harness 2P connector from the right front impact sensor (see page 24-231).

9. Measure the resistance between the terminals No. 38 and No. 39 of SRS unit connector A (39P). There should be an open circuit or at least 1 MΩ.

SRS UNIT CONNECTOR A (39P)

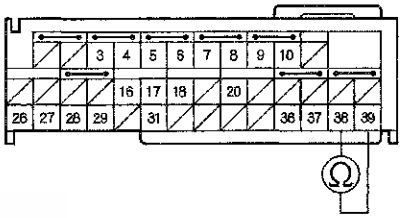

Wire side of female terminals

Is the resistance as specified?

YES—Go to step 10.

NO—Short in the right engine compartment wire harness or dashboard wire harness; replace the faulty harness. ■

(cont'd)

DTC Troubleshooting (cont'd)

10. Measure the resistance between the terminal No. 38 of SRS unit connector A (39P) and body ground, and between the terminal No. 39 and body ground. There should be an open circuit or at least 1 MΩ.

SRS UNIT CONNECTOR A (39P)

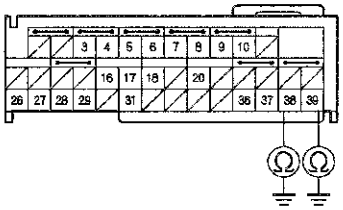

Wire side of female terminals

Is the resistance as specified?

YES—Go to step 11.

NO—Short to ground in the right engine compartment wire harness or dashboard wire harness; replace the faulty harness.■

11. Reconnect the negative cable to the battery.

12. Turn the ignition switch to ON (II).

13. Measure the voltage between the terminal No. 38 of SRS unit connector A (39P) and body ground, and between the terminal No. 39 and body ground. There should be less than 0.2 V.

SRS UNIT CONNECTOR A (39P)

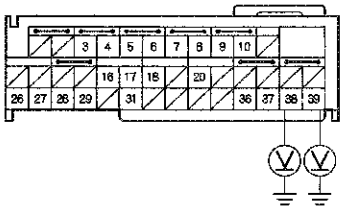

Wire side of female terminals

Is the voltage as specified?

YES—Go to step 14.

NO—Short to power in the right engine compartment wire harness or dashboard wire harness; replace the faulty harness.■

14. Turn the ignition switch to LOCK (0).

15. Connect the SRS inflator simulator (jumper connector) and the black lead (A) of simulator lead L to the right engine compartment wire harness 2P connector (B).

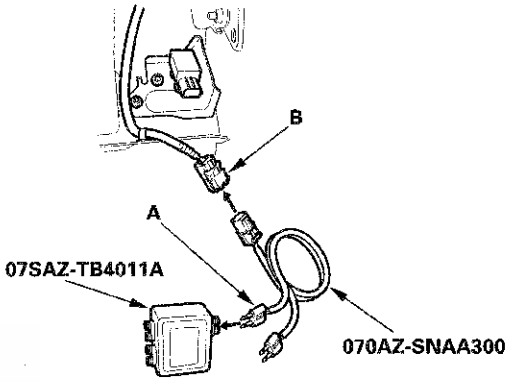

16. Measure the resistance between the terminals No. 38 and No. 39 of SRS unit connector A (39P). There should be less than 1.0 Ω.

SRS UNIT CONNECTOR A (39P)

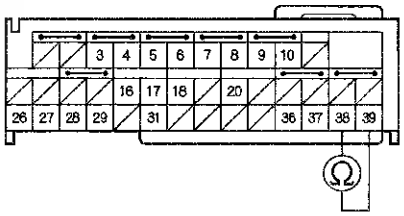

Wire side of female terminals

Is the resistance as specified?

YES—Faulty right front impact sensor or SRS unit; replace the right front impact sensor (see page 24-231). If the problem is still present, replace the SRS unit (see page 24-221).■

NO—Open in the right engine compartment wire harness or dashboard wire harness; replace the faulty harness.■

DTC 41-2x, 41-3x, 41-8x, 41-9x, 41-Ax, 41-Bx ("x" can be 0 thru 9 or A thru F): Internal Failure of the Left Front Impact Sensor

NOTE: Before doing this troubleshooting procedure, review SRS Precautions and Procedures (see page 24-23). and General Troubleshooting Information (see page 24-34).

1. Clear the DTC memory (see page 24-35).

2. Turn the ignition switch to ON (II), then wait for 10 seconds.

3. Read the DTC (see page 24-35).

   Is DTC 41-2x, 41-3x, 41-8x, 41-9x, 41-Ax, or 41-Bx indicated?

   YES—Faulty left front impact sensor; replace the left front impact sensor (see page 24-231). ■

   NO—Intermittent failure, the system is OK at this time. Go to Troubleshooting Intermittent Failures (see page 24-36). If another DTC is indicated, troubleshoot the DTC.

DTC 42-2x, 42-3x, 42-8x, 42-9x, 42-Ax, 42-Bx ("x" can be 0 thru 9 or A thru F): Internal Failure of the Right Front Impact Sensor

NOTE: Before doing this troubleshooting procedure, review SRS Precautions and Procedures (see page 24-23). and General Troubleshooting Information (see page 24-34).

1. Clear the DTC memory (see page 24-35).

2. Turn the ignition switch to ON (II), then wait for 10 seconds.

3. Read the DTC (see page 24-35).

   Is DTC 42-2x, 42-3x, 42-8x, 42-9x, 42-Ax, or 42-Bx indicated?

   YES—Faulty right front impact sensor; replace the right front impact sensor (see page 24-231). ■

   NO—Intermittent failure, the system is OK at this time. Go to Troubleshooting Intermittent Failures (see page 24-36). If another DTC is indicated, troubleshoot the DTC.

DTC Troubleshooting (cont'd)

DTC 43-1x ("x" can be 0 thru 9 or A thru F): No Signal From the Left Side Impact Sensor (first) (4-door)

Special Tools Required
- SRS inflator simulator 07SAZ-TB4011A
- SRS simulator lead L 070AZ-SNAA300

NOTE: Before doing this troubleshooting procedure, review SRS Precautions and Procedures (see page 24-23), General Troubleshooting Information (see page 24-34), and Battery Terminal Disconnection and Reconnection (see page 22-89).

1. Clear the DTC memory (see page 24-35).

2. Turn the ignition switch to ON (II), then wait for 10 seconds.

3. Read the DTC (see page 24-35).

   Is DTC 43-1x indicated?

   YES—Go to step 4.

   NO—Intermittent failure, the system is OK at this time. Go to Troubleshooting Intermittent Failures (see page 24-36). If another DTC is indicated, troubleshoot the DTC.

4. Turn the ignition switch to LOCK (0).

5. Disconnect the negative cable from the battery, then wait at least 3 minutes.

6. Check the connections between SRS unit connector B (39P) and the SRS unit, and between the SRS floor wire harness 2P connector and the left side impact sensor (first) (see page 24-223).

   Is the connection OK?

   YES—Go to step 7.

   NO—Repair the poor connections and retest.

7. Disconnect SRS unit connector B (39P) from the SRS unit (see step 8 on page 24-33).

8. Disconnect the SRS floor wire harness 2P connector from the left side impact sensor (first) (see page 24-223).

9. Measure the resistance between the terminals No. 36 and No. 37 of SRS unit connector B (39P). There should be an open circuit or at least 1 MΩ.

SRS UNIT CONNECTOR B (39P)

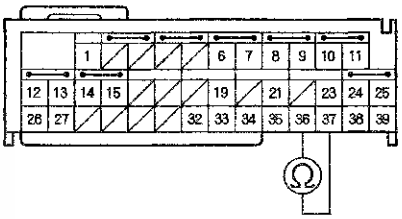

Wire side of female terminals

Is the resistance as specified?

YES—Go to step 10.

NO—Short in the SRS floor wire harness; replace the SRS floor wire harness. ■

10. Measure the resistance between the terminal No. 36 of SRS unit connector B (39P) and body ground, and between the terminal No. 37 and body ground. There should be an open circuit or at least 1 MΩ.

SRS UNIT CONNECTOR B (39P)

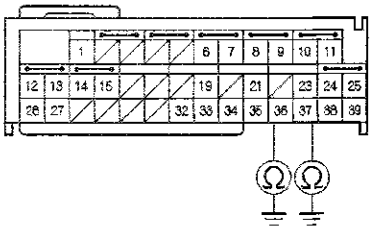

Wire side of female terminals

Is the resistance as specified?

YES—Go to step 11.

NO—Short to ground in the SRS floor wire harness; replace the SRS floor wire harness.■

11. Reconnect the negative cable to the battery.

12. Turn the ignition switch to ON (II).

13. Measure the voltage between the terminal No. 36 of SRS unit connector B (39P) and body ground, and between the terminal No. 37 and body ground. There should be less than 0.2 V.

SRS UNIT CONNECTOR B (39P)

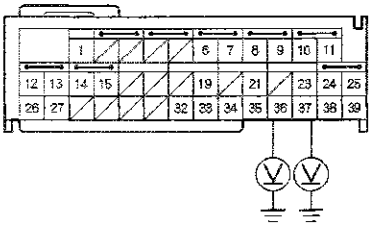

Wire side of female terminals

Is the voltage as specified?

YES—Go to step 14.

NO—Short to power in the SRS floor wire harness; replace the SRS floor wire harness.■

14. Turn the ignition switch to LOCK (0).

15. Connect the SRS inflator simulator (jumper connector) and the black lead (A) of simulator lead L to the floor wire harness 2P connector (B).

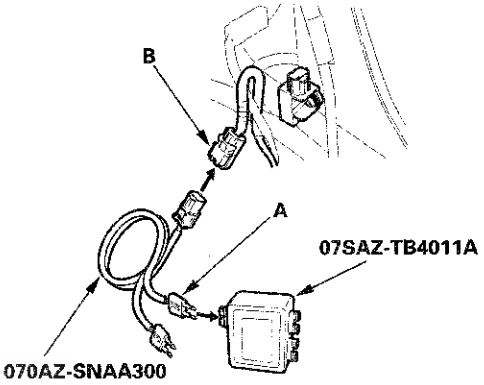

16. Measure the resistance between the terminals No. 36 and No. 37 of SRS unit connector B (39P). There should be less than 1.0 Ω.

SRS UNIT CONNECTOR B (39P)

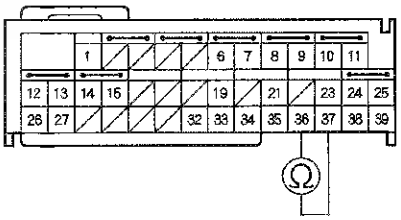

Wire side of female terminals

Is the resistance as specified?

YES—Faulty left side impact sensor (first) or SRS unit; replace the left side impact sensor (first) (see page 24-223). If the problem is still present, replace the SRS unit (see page 24-221).■

NO—Open in the SRS floor wire harness; replace the SRS floor wire harness.■

DTC Troubleshooting (cont'd)

DTC 44-1x ("x" can be 0 thru 9 or A thru F): No Signal From the Right Side Impact Sensor (first) (4-door)

Special Tools Required
- SRS inflator simulator 07SAZ-TB4011A
- SRS simulator lead L 070AZ-SNAA300

NOTE: Before doing this troubleshooting procedure, review SRS Precautions and Procedures (see page 24-23), General Troubleshooting Information (see page 24-34), and Battery Terminal Disconnection and Reconnection (see page 22-89).

1. Clear the DTC memory (see page 24-35).

2. Turn the ignition switch to ON (II), then wait for 10 seconds.

3. Read the DTC (see page 24-35).

   Is DTC 44-1x indicated?

   YES—Go to step 4.

   NO—Intermittent failure, the system is OK at this time. Go to Troubleshooting Intermittent Failures (see page 24-36). If another DTC is indicated, troubleshoot the DTC.

4. Turn the ignition switch to LOCK (0).

5. Disconnect the negative cable from the battery, then wait at least 3 minutes.

6. Check the connections between SRS unit connector B (39P) and the SRS unit, between the SRS floor wire harness 2P connector and the right side impact sensor (first) (see page 24-223).

   Is the connection OK?

   YES—Go to step 7.

   NO—Repair the poor connections and retest.

7. Disconnect SRS unit connector B (39P) from the SRS unit (see step 8 on page 24-33).

8. Disconnect the SRS floor wire harness 2P connector from the right side impact sensor (first) (see page 24-223).

9. Measure the resistance between the terminals No. 38 and No. 39 of SRS unit connector B (39P). There should be an open circuit or at least 1 MΩ.

SRS UNIT CONNECTOR B (39P)

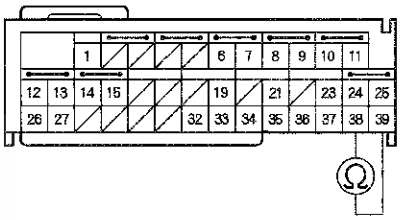

Wire side of female terminals

Is the resistance as specified?

YES—Go to step 10.

NO—Short in the SRS floor wire harness; replace the SRS floor wire harness. ■

10. Measure the resistance between the terminal No. 38 of SRS unit connector B (39P) and body ground, and between the terminal No. 39 and body ground. There should be an open circuit or at least 1 MΩ.

SRS UNIT CONNECTOR B (39P)

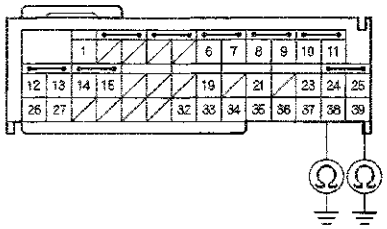

Wire side of female terminals

Is the resistance as specified?

YES—Go to step 11.

NO—Short to ground in the SRS floor wire harness; replace the SRS floor wire harness.■

11. Reconnect the negative cable to the battery.

12. Turn the ignition switch to ON (II).

13. Measure the voltage between the terminal No. 38 of SRS unit connector B (39P) and body ground, and between the terminal No. 39 and body ground. There should be less than 0.2 V.

SRS UNIT CONNECTOR B (39P)

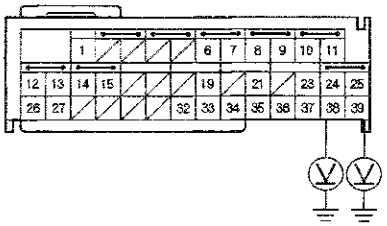

Wire side of female terminals

Is the voltage as specified?

YES—Go to step 14.

NO—Short to power in the SRS floor wire harness; replace the SRS floor wire harness.■

14. Turn the ignition switch to LOCK (0).

15. Connect the SRS inflator simulator (jumper connector) and the black lead (A) of simulator lead L to the SRS floor wire harness 2P connector (B).

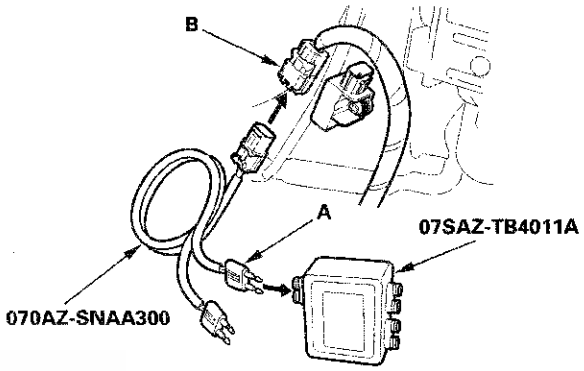

16. Measure the resistance between the terminals No. 38 and No. 39 of SRS unit connector B (39P). There should be less than 1.0 Ω.

SRS UNIT CONNECTOR B (39P)

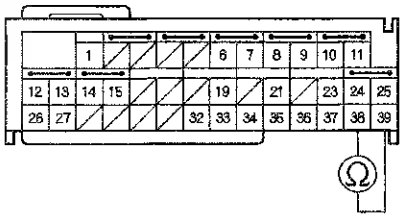

Wire side of female terminals

Is the resistance as specified?

YES—Faulty right side impact sensor (first) or SRS unit; replace the right side impact sensor (first) (see page 24-223). If the problem is still present, replace the SRS unit (see page 24-221).■

NO—Open in the SRS floor wire harness; replace the SRS floor wire harness.■

DTC Troubleshooting (cont'd)

DTC 43-1x ("x" can be 0 thru 9 or A thru F): No Signal From the Left Side Impact Sensor (first) (2-door)

Special Tools Required
- SRS inflator simulator 07SAZ-TB4011A
- SRS simulator lead L 070AZ-SNAA300

NOTE:
- Before doing this troubleshooting procedure, review SRS Precautions and Procedures (see page 24-23), General Troubleshooting Information (see page 24-34), and Battery Terminal Disconnection and Reconnection (see page 22-89).
- Before replacing the SRS unit, check the SRS unit software version with the HDS. If the software version is not the latest, update the SRS unit software (see page 24-37) and retest.

1. Clear the DTC memory (see page 24-35).

2. Turn the ignition switch to ON (II), then wait for 10 seconds.

3. Read the DTC (see page 24-35).

   Is DTC 43-1x indicated?

   YES—
   - If DTC 43-11 is indicated, go to step 4.
   - If DTC 43-1x except 43-11 is indicated alone, or DTC 43-11 and 45-11 is indicated, faulty left side impact sensor (first); replace the left side impact sensor (first) (see page 24-224). ■

   NO—Intermittent failure, the system is OK at this time. Go to Troubleshooting Intermittent Failures (see page 24-36). If another DTC is indicated, troubleshoot the DTC.

4. Turn the ignition switch to LOCK (0).

5. Disconnect the negative cable from the battery, then wait at least 3 minutes.

6. Disconnect the SRS floor wire harness 4P connector from the left side impact sensor (first) (see page 24-224).

7. Disconnect SRS unit connector B (39P) from the SRS unit (see step 8 on page 24-33).

8. Measure the resistance between the terminals No. 36 and No. 37 of SRS unit connector B (39P). There should be an open circuit or at least 1 MΩ.

SRS UNIT CONNECTOR B (39P)

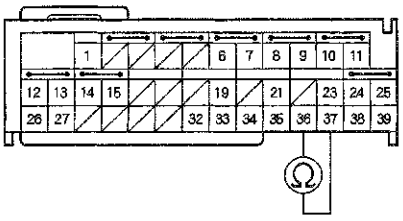

Wire side of female terminals

Is the resistance as specified?

YES—Go to step 9.

NO—Short in the SRS floor wire harness; replace the SRS floor wire harness. ■

9. Measure the resistance between the terminal No. 36 of SRS unit connector B (39P) and body ground, and between the terminal No. 37 and body ground. There should be an open circuit or at least 1 MΩ.

SRS UNIT CONNECTOR B (39P)

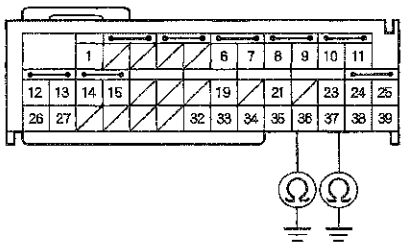

Wire side of female terminals

Is the resistance as specified?

YES—Go to step 10.

NO—Short to ground in the SRS floor wire harness; replace the SRS floor wire harness. ■

10. Reconnect the negative cable to the battery.

11. Turn the ignition switch to ON (II).

12. Measure the voltage between the terminal No. 36 of SRS unit connector B (39P) and body ground, and between the terminal No. 37 and body ground. There should be less than 0.2 V.

SRS UNIT CONNECTOR B (39P)

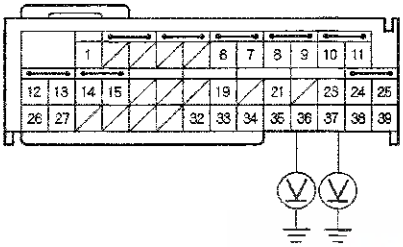

Wire side of female terminals

Is the voltage as specified?

YES—Go to step 13.

NO—Short to power in the SRS floor wire harness; replace the SRS floor wire harness.■

13. Turn the ignition switch to LOCK (0).

14. Connect the SRS inflator simulator (jumper connector) and the black lead (A) of simulator lead L to the SRS floor wire harness 4P connector (B).

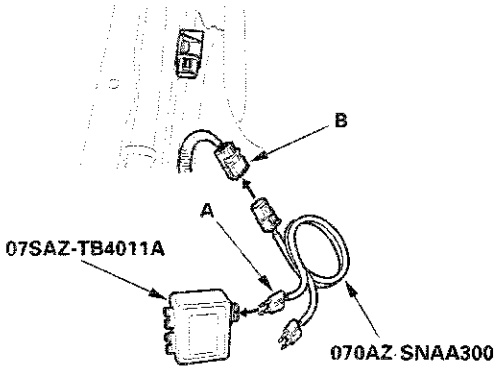

15. Measure the resistance between the terminals No. 36 and No. 37 of SRS unit connector B (39P). There should be less than 1.0 Ω.

SRS UNIT CONNECTOR B (39P)

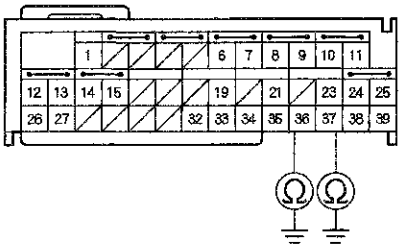

Wire side of female terminals

Is the resistance as specified?

YES—Faulty left side impact sensor (first) or SRS unit; replace the left side impact sensor (first) (see page 24-224). If the problem is still present, replace the SRS unit (see page 24-221).■

NO—Open in the SRS floor wire harness; replace the SRS floor wire harness.■

DTC Troubleshooting (cont'd)

DTC 44-1x ("x" can be 0 thru 9 or A thru F): No Signal From the Right Side Impact Sensor (first) (2-door)

Special Tools Required
- SRS inflator simulator 07SAZ-TB4011A
- SRS simulator lead L 070AZ-SNAA300

NOTE:
- Before doing this troubleshooting procedure, review SRS Precautions and Procedures (see page 24-23), General Troubleshooting Information (see page 24-34), and Battery Terminal Disconnection and Reconnection (see page 22-89).
- Before replacing the SRS unit, check the SRS unit software version with the HDS. If the software version is not the latest, update the SRS unit software (see page 24-37) and retest.

1. Clear the DTC memory (see page 24-35).

2. Turn the ignition switch to ON (II), then wait for 10 seconds.

3. Read the DTC (see page 24-35).

   Is DTC 44-1x indicated?

   YES—
   - If DTC 44-11 is indicated, go to step 4.
   - If DTC 44-1x except 44-11 is indicated alone or DTC 44-11 and 46-11 are indicated, faulty left side impact sensor (first); replace the left side impact sensor (first) (see page 24-224).■
   - If DTC 44-12 and B2-11 are indicated, troubleshoot DTC B2-1x.

   NO—Intermittent failure, the system is OK at this time. Go to Troubleshooting Intermittent Failures (see page 24-36). If another DTC is indicated, troubleshoot the DTC.

4. Turn the ignition switch to LOCK (0).

5. Disconnect the negative cable from the battery, then wait at least 3 minutes.

6. Disconnect the SRS floor wire harness 4P connector from the right side impact sensor (first) (see page 24-224).

7. Disconnect SRS unit connector B (39P) from the SRS unit (see step 8 on page 24-33).

8. Measure the resistance between the terminals No. 38 and No. 39 of SRS unit connector B (39P). There should be more than 1 MΩ.

SRS UNIT CONNECTOR B (39P)

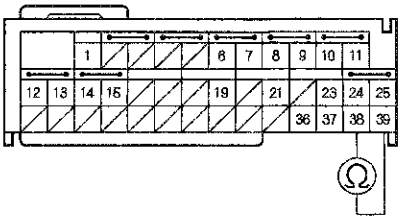

Wire side of female terminals

Is the resistance as specified?

YES—Go to step 9.

NO—Short in the SRS floor wire harness; replace the SRS floor wire harness.■

9. Measure the resistance between the terminal No. 38 of SRS unit connector B (39P) and body ground, and between the terminal No. 39 and body ground. There should be more than 1 MΩ.

SRS UNIT CONNECTOR B (39P)

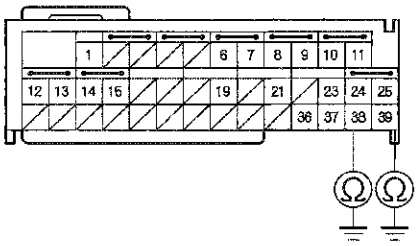

Wire side of female terminals

Is the resistance as specified?

YES—Go to step 10.

NO—Short to ground in the SRS floor wire harness; replace the SRS floor wire harness.■

10. Reconnect the negative cable to the battery.

11. Turn the ignition switch to ON (II).

12. Measure the voltage between the terminal No. 38 of SRS unit connector B (39P) and body ground, and between the terminal No. 39 and body ground. There should be less than 0.2 V.

SRS UNIT CONNECTOR B (39P)

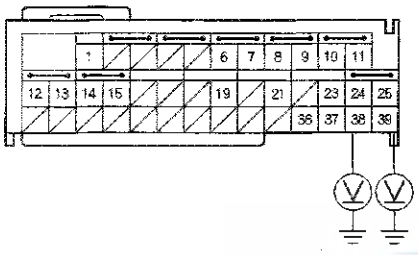

Wire side of female terminals

Is the voltage as specified?

YES—Go to step 13.

NO—Short to power in the SRS floor wire harness; replace the SRS floor wire harness. ■

13. Turn the ignition switch to LOCK (0).

14. Connect the SRS inflator simulator (jumper connector) and the black lead (A) of simulator lead L to the floor wire harness 4P connector (B).

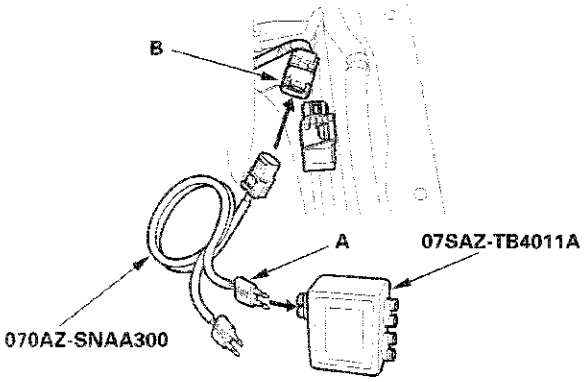

15. Measure the resistance between the terminals No. 38 and No. 39 of SRS unit connector B (39P). There should be less than 1.0 Ω.

SRS UNIT CONNECTOR B (39P)

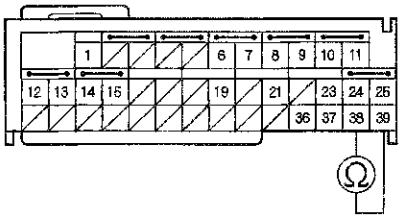

Wire side of female terminals

Is the resistance as specified?

YES—Faulty right side impact sensor (first) or SRS unit; replace the right side impact sensor (first) (see page 24-224). If the problem is still present, replace the SRS unit (see page 24-221). ■

NO—Open in the SRS floor wire harness; replace the SRS floor wire harness. ■

DTC Troubleshooting (cont'd)

DTC 43-2x, 43-3x, 43-8x, 43-9x, 43-Ax, 43-Bx ("x" can be 0 thru 9 or A thru F):
Internal Failure of the Left Side Impact Sensor (first)

NOTE: Before doing this troubleshooting procedure, review SRS Precautions and Procedures (see page 24-23) and General Troubleshooting Information (see page 24-34).

1. Clear the DTC memory (see page 24-35).
2. Turn the ignition switch to ON (II), then wait for 10 seconds.
3. Read the DTC (see page 24-35).

   Is DTC 43-2x, 43-3x, 43-8x, 43-9x, 43-Ax, or 43-Bx indicated?

   YES—Faulty left front impact sensor (first); replace the left front impact sensor (first) (see page 24-223). ■

   NO—Intermittent failure, the system is OK at this time. Go to Troubleshooting Intermittent Failures (see page 24-36). If another DTC is indicated, troubleshoot the DTC.

DTC 44-2x, 44-3x, 44-8x, 44-9x, 44-Ax, 44-Bx ("x" can be 0 thru 9 or A thru F):
Internal Failure of the Right Side Impact Sensor (first)

NOTE: Before doing this troubleshooting procedure, review SRS Precautions and Procedures (see page 24-23) and General Troubleshooting Information (see page 24-34).

1. Clear the DTC memory (see page 24-35).
2. Turn the ignition switch to ON (II), then wait for 10 seconds.
3. Read the DTC (see page 24-35).

   Is DTC 44-2x, 44-3x, 44-8x, 44-9x, 44-Ax, or 44-Bx indicated?

   YES—Faulty right front impact sensor (first); replace the right front impact sensor (first) (see page 24-223). ■

   NO—Intermittent failure, the system is OK at this time. Go to Troubleshooting Intermittent Failures (see page 24-36). If another DTC is indicated, troubleshoot the DTC.

DTC 45-1x ("x" can be 0 thru 9 or A thru F): No Signal From the Left Side Impact Sensor (second) (4-door)

Special Tools Required
- SRS inflator simulator 07SAZ-TB4011A
- SRS simulator lead L 070AZ-SNAA300

NOTE: Before doing this troubleshooting procedure, review SRS Precautions and Procedures (see page 24-23), General Troubleshooting Information (see page 24-34), and Battery Terminal Disconnection and Reconnection (see page 22-89).

1. Clear the DTC memory (see page 24-35).

2. Turn the ignition switch to ON (II), then wait for 10 seconds.

3. Read the DTC (see page 24-35).

   Is DTC 45-1x indicated?

   YES—Go to step 4.

   NO—Intermittent failure, the system is OK at this time. Go to Troubleshooting Intermittent Failures (see page 24-36). If another DTC is indicated, troubleshoot the DTC.

4. Turn the ignition switch to LOCK (0).

5. Disconnect the negative cable from the battery, then wait at least 3 minutes.

6. Check the connections between SRS unit connector B (39P) and the SRS unit, between the SRS floor wire harness 2P connector and the left side impact sensor (second) (see page 24-225).

   Is the connection OK?

   YES—Go to step 7.

   NO—Repair the poor connections and retest.

7. Disconnect SRS unit connector B (39P) from the SRS unit (see step 8 on page 24-33).

8. Disconnect the SRS floor wire harness 2P connector from the left side impact sensor (second) (see page 24-225).

9. Measure the resistance between the terminals No. 32 and No. 33 of SRS unit connector B (39P). There should be an open circuit or at least 1 MΩ.

SRS UNIT CONNECTOR B (39P)

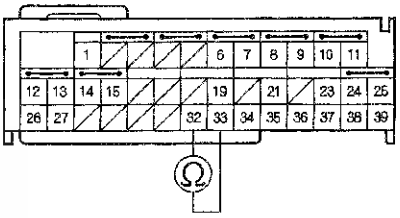

Wire side of female terminals

Is the resistance as specified?

YES—Go to step 10.

NO—Short in the SRS floor wire harness; replace the SRS floor wire harness.■

(cont'd)

DTC Troubleshooting (cont'd)

10. Measure the resistance between the terminal No. 32 of SRS unit connector B (39P) and body ground, and between the terminal No. 33 and body ground. There should be an open circuit or at least 1 MΩ.

SRS UNIT CONNECTOR B (39P)

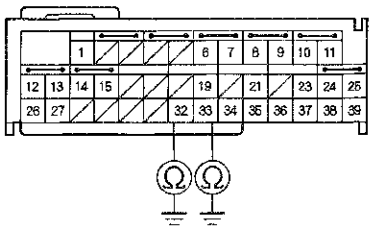

Wire side of female terminals

Is the resistance as specified?

YES—Go to step 11.

NO—Short to ground in the SRS floor wire harness; replace the SRS floor wire harness. ■

11. Reconnect the negative cable to the battery.

12. Turn the ignition switch to ON (II).

13. Measure the voltage between the terminal No. 32 of SRS unit connector B (39P) and body ground, and between the terminal No. 33 and body ground. There should be less than 0.2 V.

SRS UNIT CONNECTOR B (39P)

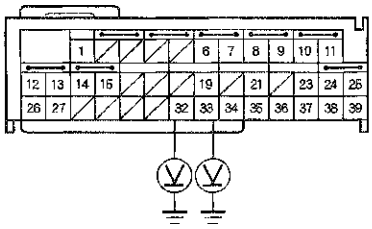

Wire side of female terminals

Is the voltage as specified?

YES—Go to step 14.

NO—Short to power in the SRS floor wire harness; replace the SRS floor wire harness. ■

14. Turn the ignition switch to LOCK (0).

15. Connect the SRS inflator simulator (jumper connector) and the black lead (A) of simulator lead L to the SRS floor wire harness 2P connector (B).

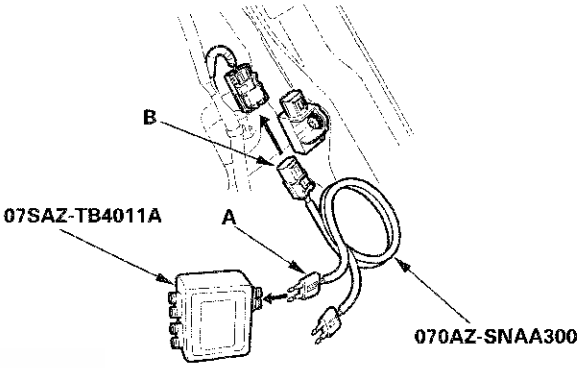

16. Measure the resistance between the terminals No. 32 and No. 33 of SRS unit connector B (39P). There should be less than 1.0 Ω.

SRS UNIT CONNECTOR B (39P)

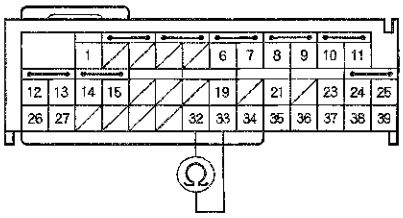

Wire side of female terminals

Is the resistance as specified?

YES—Faulty left side impact sensor (second) or SRS unit; replace the left side impact sensor (second) (see page 24-225). If the problem is still present, replace the SRS unit (see page 24-221). ■

NO—Open in the SRS floor wire harness; replace the SRS floor wire harness. ■

DTC 46-1x ("x" can be 0 thru 9 or A thru F): No Signal From the Right Side Impact Sensor (second) (4-door)

Special Tools Required
- SRS inflator simulator 07SAZ-TB4011A
- SRS simulator lead L 070AZ-SNAA300

NOTE: Before doing this troubleshooting procedure, review SRS Precautions and Procedures (see page 24-23), General Troubleshooting Information (see page 24-34), and Battery Terminal Disconnection and Reconnection (see page 22-89).

1. Clear the DTC memory (see page 24-35).

2. Turn the ignition switch to ON (II), then wait for 10 seconds.

3. Read the DTC (see page 24-35).

   Is DTC 46-1x indicated?

   YES—Go to step 4.

   NO—Intermittent failure, the system is OK at this time. Go to Troubleshooting Intermittent Failures (see page 24-36). If another DTC is indicated, troubleshoot the DTC.

4. Turn the ignition switch to LOCK (0).

5. Disconnect the negative cable from the battery, then wait at least 3 minutes.

6. Check the connections between SRS unit connector B (39P) and the SRS unit, and between the SRS floor wire harness 2P connector and the right side impact sensor (second) (see page 24-225).

   Are the connections OK?

   YES—Go to step 7.

   NO—Repair the poor connections and retest.

7. Disconnect SRS unit connector B (39P) from the SRS unit (see step 8 on page 24-33).

8. Disconnect the SRS floor wire harness 2P connector from the right side impact sensor (second) (see page 24-225).

9. Measure the resistance between the terminals No. 34 and No. 35 of SRS unit connector B (39P). There should be an open circuit or at least 1 MΩ.

SRS UNIT CONNECTOR B (39P)

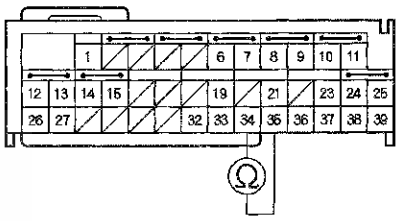

Wire side of female terminals

Is the resistance as specified?

YES—Go to step 10.

NO—Short in the SRS floor wire harness; replace the SRS floor wire harness. ■

(cont'd)

DTC Troubleshooting (cont'd)

10. Measure the resistance between the terminal No. 34 of SRS unit connector B (39P) and body ground, and between the terminal No. 35 and body ground. There should be an open circuit or at least 1 MΩ.

SRS UNIT CONNECTOR B (39P)

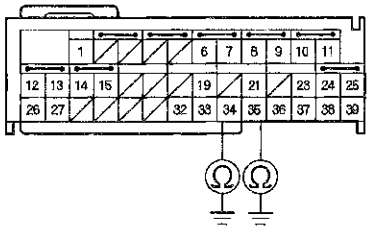

Wire side of female terminals

Is the resistance as specified?

YES—Go to step 11.

NO—Short to ground in the SRS floor wire harness; replace the SRS floor wire harness.■

11. Reconnect the negative cable to the battery.

12. Turn the ignition switch to ON (II).

13. Measure the voltage between the terminal No. 34 of SRS unit connector B (39P) and body ground, and between the terminal No. 35 and body ground. There should be less than 0.2 V.

SRS UNIT CONNECTOR B (39P)

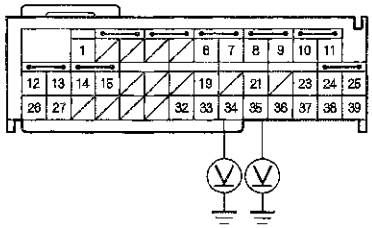

Wire side of female terminals

Is the voltage as specified?

YES—Go to step 14.

NO—Short to power in the SRS floor wire harness; replace the SRS floor wire harness.■

14. Turn the ignition switch to LOCK (0).

15. Connect the SRS inflator simulator (jumper connector) and the black lead (A) of simulator lead L to the SRS floor wire harness 2P connector (B).

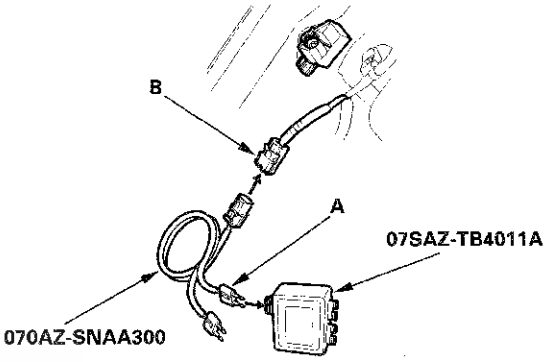

16. Measure the resistance between the terminals No. 34 and No. 35 of SRS unit connector B (39P). There should be less than 1.0 Ω.

SRS UNIT CONNECTOR B (39P)

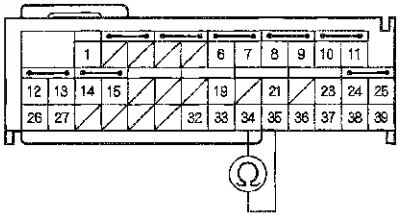

Wire side of female terminals

Is the resistance as specified?

YES—Faulty right side impact sensor (second) or SRS unit; replace the right side impact sensor (second) (see page 24-225). If the problem is still present, replace the SRS unit (see page 24-221).■

NO—Open in the SRS floor wire harness; replace the SRS floor wire harness.■

DTC 45-1x ("x" can be 0 thru 9 or A thru F): No Signal From the Left Side Impact Sensor (second) (2-door)

Special Tools Required
- SRS inflator simulator 07SAZ-TB4011A
- SRS simulator lead L 070AZ-SNAA300

NOTE:
- Before doing this troubleshooting procedure, review SRS Precautions and Procedures (see page 24-23), General Troubleshooting Information (see page 24-34), and Battery Terminal Disconnection and Reconnection (see page 22-89).
- Before replacing the SRS unit, check the SRS unit software version with the HDS. If the software version is not the latest, update the SRS unit software (see page 24-37) and retest.

1. Clear the DTC memory (see page 24-35).

2. Turn the ignition switch to ON (II), then wait for 10 seconds.

3. Read the DTC (see page 24-35).

   Is DTC 45-1x indicated?

   YES—
   - If DTC 45-11 is indicated, go to step 4.
   - If DTC 45-1x except 45-11 is indicated alone, faulty left side impact sensor (second); replace the left side impact sensor (second) (see page 24-226). ■

   NO—Intermittent failure, the system is OK at this time. Go to Troubleshooting Intermittent Failures (see page 24-36). If another DTC is indicated, troubleshoot the DTC.

4. Turn the ignition switch to LOCK (0).

5. Disconnect the negative cable from the battery, then wait at least 3 minutes.

6. Disconnect the SRS floor wire harness 4P connector from the left side impact sensor (first) (see page 24-224).

7. Disconnect the SRS floor wire harness 2P connector from the left side impact sensor (second) (see page 24-226).

8. Measure the resistance between the terminals No. 1 and No. 2 of SRS floor wire harness 2P connector. There should be an open circuit or at least 1 MΩ.

SRS FLOOR WIRE HARNESS 2P CONNECTOR

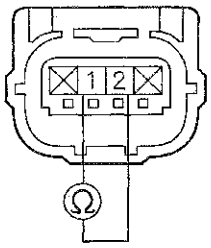

Terminal side of female terminals

Is the resistance as specified?

YES—Go to step 9.

NO—Short in the SRS floor wire harness; replace the SRS floor wire harness. ■

9. Measure the resistance between the terminal No. 1 of SRS floor wire harness 2P connector and body ground, and between the terminal No. 2 and body ground. There should be an open circuit or at least 1 MΩ.

SRS FLOOR WIRE HARNESS 2P CONNECTOR

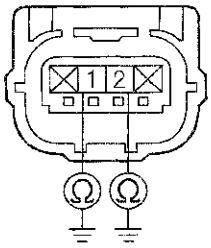

Terminal side of female terminals

Is the resistance as specified?

YES—Go to step 10.

NO—Short to ground in the SRS floor wire harness; replace the SRS floor wire harness. ■

(cont'd)

DTC Troubleshooting (cont'd)

10. Reconnect the negative cable to the battery.

11. Turn the ignition switch to ON (II).

12. Measure the voltage between the terminal No. 1 of SRS floor wire harness 2P connector and body ground, and between the terminal No. 2 and body ground. There should be less than 0.2 V.

SRS FLOOR WIRE HARNESS 2P CONNECTOR

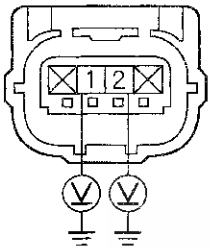

Terminal side of female terminals

Is the voltage as specified?

YES—Go to step 13.

NO—Short to power in the SRS floor wire harness; replace the SRS floor wire harness.■

13. Turn the ignition switch to LOCK (0).

14. Connect the SRS inflator simulator (jumper connector) and the black lead (A) of simulator lead L to the SRS floor wire harness 2P connector (B).

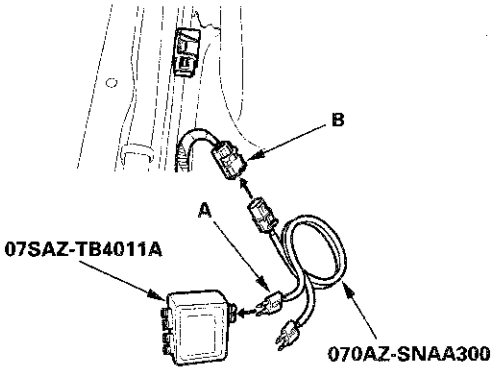

15. Measure the resistance between the terminals No. 1 and No. 2 of SRS floor wire harness 2P connector. There should be less than 1.0 Ω.

SRS FLOOR WIRE HARNESS 2P CONNECTOR

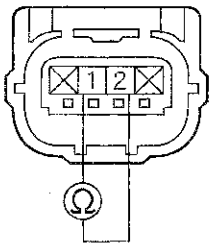

Terminal side of female terminals

Is the resistance as specified?

YES—Faulty left side impact sensor (second) or SRS unit; replace the left side impact sensor (second) (see page 24-226). If the problem is still present, replace the SRS unit (see page 24-221).

NO—Open in the SRS floor wire harness; replace the SRS floor wire harness.■

DTC 46-1x ("x" can be 0 thru 9 or A thru F): No Signal From the Right Side Impact Sensor (second) (2-door)

Special Tools Required
- SRS inflator simulator 07SAZ-TB4011A
- SRS simulator lead L 070AZ-SNAA300

NOTE:
- Before doing this troubleshooting procedure, review SRS Precautions and Procedures (see page 24-23), General Troubleshooting Information (see page 24-34), and Battery Terminal Disconnection and Reconnection (see page 22-89).
- Before replacing the SRS unit, check the SRS unit software version with the HDS. If the software version is not the latest, update the SRS unit software (see page 24-37) and retest.

1. Clear the DTC memory (see page 24-35).

2. Turn the ignition switch to ON (II), then wait for 10 seconds.

3. Read the DTC (see page 24-35).

   Is DTC 46-1x indicated?

   YES—
   - If DTC 46-11 is indicated alone or DTC 46-11 and B2-12 is indicated, go to step 4.
   - If DTC 46-1x except 46-11 is indicated alone, faulty left side impact sensor (second); replace the left side impact sensor (second) (see page 24-226).■
   - If DTC 44-11 and 46-11 are indicated, faulty left side impact sensor (first); replace the left side impact sensor (first) (see page 24-224).■
   - If DTC 46-11 and B2-11 are indicated, faulty rear safing sensor; replace the rear safing sensor (see page 24-227).■

   NO—Intermittent failure, the system is OK at this time. Go to Troubleshooting Intermittent Failures (see page 24-36). If another DTC is indicated, troubleshoot the DTC.

4. Turn the ignition switch to LOCK (0).

5. Disconnect the negative cable from the battery, then wait at least 3 minutes.

6. Disconnect the SRS floor wire harness 2P connector from the right side impact sensor (second) (see page 24-226).

7. Disconnect the SRS floor wire harness 4P connector from the rear safing sensor (see page 24-227).

8. Measure the resistance between the terminals No. 1 and No. 2 of SRS floor wire harness 2P connector. There should be an open circuit or at least 1 MΩ.

SRS FLOOR WIRE HARNESS 2P CONNECTOR

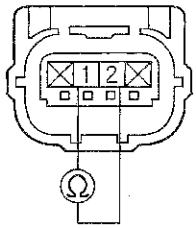

Terminal side of female terminals

Is the resistance as specified?

YES—Go to step 9.

NO—Short in the SRS floor wire harness; replace the SRS floor wire harness.■

9. Measure the resistance between the terminal No. 1 of SRS floor wire harness 2P connector and body ground, and between the terminal No. 2 and body ground. There should be an open circuit or at least 1 MΩ.

SRS FLOOR WIRE HARNESS 2P CONNECTOR

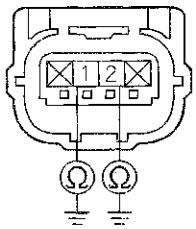

Terminal side of female terminals

Is the resistance as specified?

YES—Go to step 10.

NO—Short to ground in the SRS floor wire harness; replace the SRS floor wire harness.■

(cont'd)

DTC Troubleshooting (cont'd)

10. Reconnect the negative cable to the battery.

11. Turn the ignition switch to ON (II).

12. Measure the voltage between the terminal No. 1 of SRS floor wire harness 2P connector and body ground, and between the terminal No. 2 and body ground. There should be less than 0.2 V.

SRS FLOOR WIRE HARNESS 2P CONNECTOR

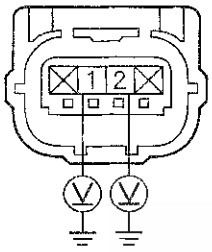

Terminal side of female terminals

Is the voltage as specified?

YES—Go to step 13.

NO—Short to power in the SRS floor wire harness; replace the SRS floor wire harness.■

13. Turn the ignition switch to LOCK (0).

14. Connect the SRS inflator simulator (jumper connector) and the black lead (A) of simulator lead L to the SRS floor wire harness 2P connector (B).

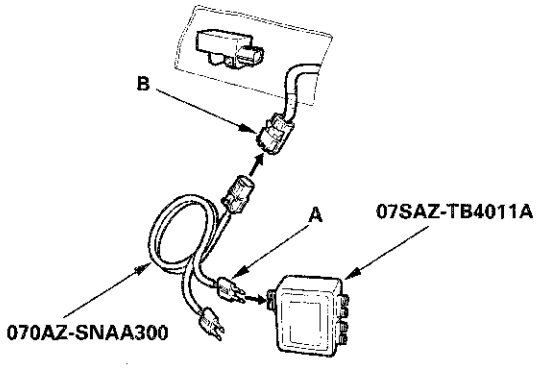

15. Measure the resistance between the terminals No. 1 and No. 2 of SRS floor wire harness 2P connector. There should be less than 1.0 Ω.

SRS FLOOR WIRE HARNESS 2P CONNECTOR

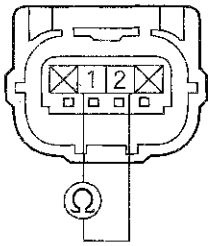

Terminal side of female terminals

Is the resistance as specified?

YES—Faulty right side impact sensor (second) or SRS unit; replace the right side impact sensor (second) (see page 24-226). If the problem is still present, replace the SRS unit (see page 24-221).■

NO—Open in the SRS floor wire harness; replace the SRS floor wire harness.■

DTC 45-2x, 45-3x, 45-8x, 45-9x, 45-Ax, 45-Bx ("x" can be 0 thru 9 or A thru F): Internal Failure of the Left Side Impact Sensor (second)

NOTE: Before doing this troubleshooting procedure, review SRS Precautions and Procedures (see page 24-23) and General Troubleshooting Information (see page 24-34).

1. Clear the DTC memory (see page 24-35).
2. Turn the ignition switch to ON (II), then wait for 10 seconds.
3. Read the DTC (see page 24-35).

   Is DTC 45-2x, 45-3x, 45-8x, 45-9x, 45-Ax, or 45-Bx indicated?

   YES—Faulty left side impact sensor (second); replace the left side impact sensor (second) for 4-door (see page 24-225), for 2-door (see page 24-226).■

   NO—Intermittent failure, the system is OK at this time. Go to Troubleshooting Intermittent Failures (see page 24-36). If another DTC is indicated, troubleshoot the DTC.

DTC 46-2x, 46-3x, 46-8x, 46-9x, 46-Ax, 46-Bx ("x" can be 0 thru 9 or A thru F): Internal Failure of the Right Side Impact Sensor (second)

NOTE: Before doing this troubleshooting procedure, review SRS Precautions and Procedures (see page 24-23) and General Troubleshooting Information (see page 24-34).

1. Clear the DTC memory (see page 24-35).
2. Turn the ignition switch to ON (II), then wait for 10 seconds.
3. Read the DTC (see page 24-35).

   Is DTC 46-2x, 46-3x, 46-8x, 46-9x, 46-Ax, or 46-Bx indicated?

   YES—Faulty right side impact sensor (second); replace the right side impact sensor (second) for 4-door (see page 24-225), for 2-door (see page 24-226).■

   NO—Intermittent failure, the system is OK at this time. Go to Troubleshooting Intermittent Failures (see page 24-36). If another DTC is indicated, troubleshoot the DTC.

DTC Troubleshooting (cont'd)

DTC B2-1x ("x" can be 0 thru 9 or A thru F): No Signal From the Rear Safing Sensor (4-door)

Special Tools Required
- SRS inflator simulator 07SAZ-TB4011A
- SRS simulator lead L 070AZ-SNAA300

NOTE: Before doing this troubleshooting procedure, review SRS Precautions and Procedures (see page 24-23), General Troubleshooting Information (see page 24-34), and Battery Terminal Disconnection and Reconnection (see page 22-89).

1. Clear the DTC memory (see page 24-35).

2. Turn the ignition switch to ON (II), then wait for 10 seconds.

3. Read the DTC (see page 24-35).

   Is DTC B2-1x indicated?

   YES—Go to step 4.

   NO—Intermittent failure, the system is OK at this time. Go to Troubleshooting Intermittent Failures (see page 24-36). If another DTC is indicated, troubleshoot the DTC.

4. Turn the ignition switch to LOCK (0).

5. Disconnect the negative cable from the battery, then wait at least 3 minutes.

6. Check the connections between SRS unit connector B (39P) and the SRS unit, and between the SRS floor wire harness 2P connector and the rear safing sensor (see page 24-227).

   Are the connections OK?

   YES—Go to step 7.

   NO—Repair the poor connections and retest.

7. Disconnect SRS unit connector B (39P) from the SRS unit (see step 8 on page 24-33).

8. Disconnect the SRS floor wire harness 2P connector from the rear safing sensor (see page 24-227).

9. Measure the resistance between the terminals No. 26 and No. 27 of SRS unit connector B (39P). There should be an open circuit or at least 1 MΩ.

SRS UNIT CONNECTOR B (39P)

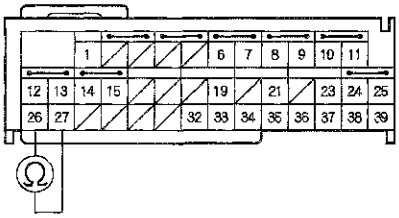

Wire side of female terminals

Is the resistance as specified?

YES—Go to step 10.

NO—Short in the SRS floor wire harness; replace the SRS floor wire harness. ■

10. Measure the resistance between the terminal No. 26 of SRS unit connector B (39P) and body ground, and between the terminal No. 27 and body ground. There should be an open circuit or at least 1 MΩ.

SRS UNIT CONNECTOR B (39P)

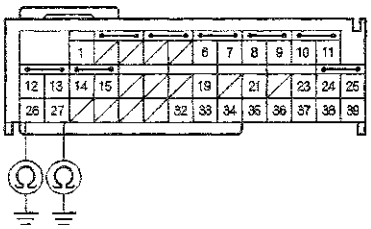

Wire side of female terminals

Is the resistance as specified?

YES—Go to step 11.

NO—Short to ground in the SRS floor wire harness; replace the SRS floor wire harness.■

11. Reconnect the negative cable to the battery.

12. Turn the ignition switch to ON (II).

13. Measure the voltage between the terminal No. 26 of SRS unit connector B (39P) and body ground, and between the terminal No. 27 and body ground. There should be less than 0.2 V.

SRS UNIT CONNECTOR B (39P)

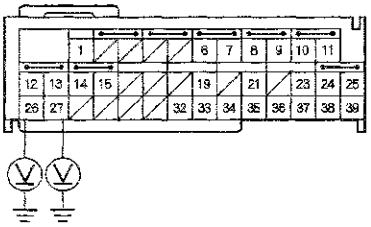

Wire side of female terminals

Is the voltage as specified?

YES—Go to step 14.

NO—Short to power in the SRS floor wire harness; replace the SRS floor wire harness.■

14. Turn the ignition switch to LOCK (0).

15. Connect the SRS inflator simulator (jumper connector) and the black lead (A) of simulator lead L to the SRS floor wire harness 2P connector (B).

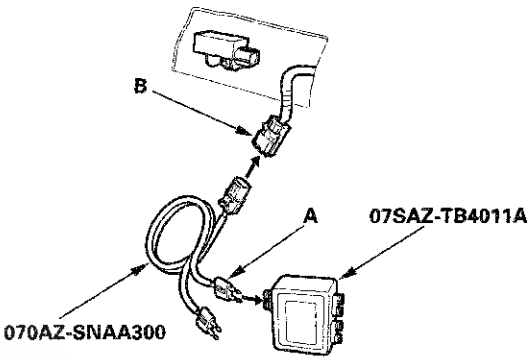

16. Measure the resistance between the terminals No. 26 and No. 27 of SRS unit connector B (39P). There should be less than 1.0 Ω.

SRS UNIT CONNECTOR B (39P)

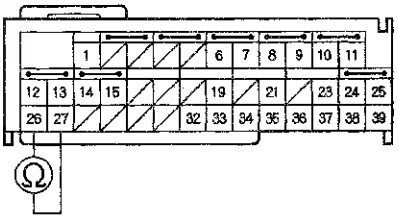

Wire side of female terminals

Is the resistance as specified?

YES—Faulty rear safing sensor or SRS unit; replace the rear safing sensor (see page 24-227). If the problem is still present, replace the SRS unit (see page 24-221).■

NO—Open in the SRS floor wire harness; replace the SRS floor wire harness.■

DTC Troubleshooting (cont'd)

DTC B2-1x ("x" can be 0 thru 9 or A thru F): No Signal From the Rear Safing Sensor (2-door)

Special Tools Required
- SRS inflator simulator 07SAZ-TB4011A
- SRS simulator lead L 070AZ-SNAA300

NOTE:
- Before doing this troubleshooting procedure, review SRS Precautions and Procedures (see page 24-23), General Troubleshooting Information (see page 24-34), and Battery Terminal Disconnection and Reconnection (see page 22-89).
- Before replacing the SRS unit, check the SRS unit software version with the HDS. If the software version is not the latest, update the SRS unit software (see page 24-37) and retest.

1. Clear the DTC memory (see page 24-35).

2. Turn the ignition switch to ON (II), then wait for 10 seconds.

3. Read the DTC (see page 24-35).

   Is DTC B2-1x indicated?

   YES—
   - If DTC B2-11 is indicated alone or DTC B2-11 and 43-12 are indicated, go to step 4.
   - If DTC B2-1x except B2-11 is indicated alone or DTC B2-11 and 46-11 are indicated, faulty rear safing sensor; replace the rear safing sensor (see page 24-227). ■
   - If DTC B2-12 and 46-11 are indicated, troubleshoot DTC 46-1x.

   NO—Intermittent failure, the system is OK at this time. Go to Troubleshooting Intermittent Failures (see page 24-36). If another DTC is indicated, troubleshoot the DTC.

4. Turn the ignition switch to LOCK (0).

5. Disconnect the negative cable from the battery, then wait at least 3 minutes.

6. Disconnect the SRS floor wire harness 4P connector from the right side impact sensor (first) (see page 24-224).

7. Disconnect the SRS floor wire harness 4P connector from the rear safing sensor (see page 24-227).

8. Measure the resistance between the terminals No. 2 and No. 3 of the SRS floor wire harness 4P connector (Rear safing sensor). There should be an open circuit or at least 1 MΩ.

SRS FLOOR WIRE HARNESS 4P CONNECTOR (Rear safing sensor)

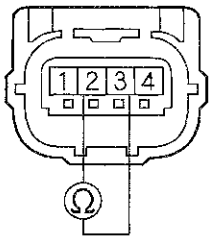

Terminal side of female terminals

Is the resistance as specified?

YES—Go to step 9.

NO—Short in the SRS floor wire harness; replace the SRS floor wire harness. ■

9. Measure the resistance between the terminal No. 2 of the SRS floor wire harness 4P connector (Rear safing sensor) and body ground, and between the terminal No. 3 and body ground. There should be an open circuit or at least 1 MΩ.

SRS FLOOR WIRE HARNESS 4P CONNECTOR (Rear safing sensor)

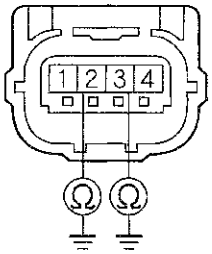

Terminal side of female terminals

Is the resistance as specified?

YES—Go to step 10.

NO—Short to ground in the SRS floor wire harness; replace the SRS floor wire harness. ■

10. Reconnect the negative cable to the battery.

11. Turn the ignition switch to ON (II).

12. Measure the voltage between the terminal No. 2 of the SRS floor wire harness 4P connector (Rear safing sensor) and body ground, and between the terminal No. 3 and body ground. There should be less than 0.2 V.

SRS FLOOR WIRE HARNESS 4P CONNECTOR (Rear safing sensor)

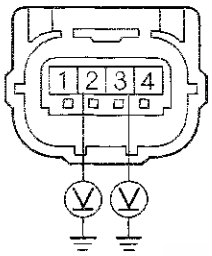

Terminal side of female terminals

Is the voltage as specified?

YES—Go to step 13.

NO—Short to power in the SRS floor wire harness; replace the SRS floor wire harness.■

13. Turn the ignition switch to LOCK (0).

14. Connect the SRS inflator simulator (jumper connector) and the red lead (A) of simulator lead L to the SRS floor wire harness 4P connector (B).

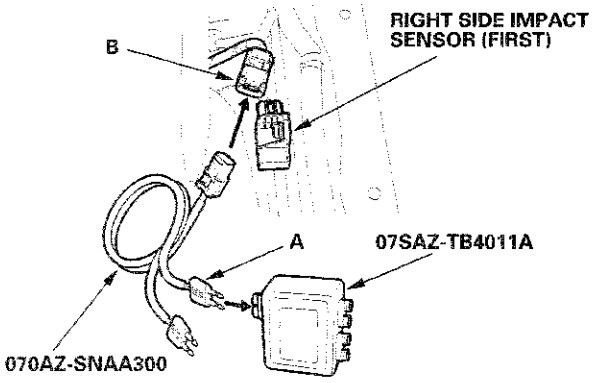

15. Measure the resistance between the terminals No. 2 and No. 3 of the SRS floor wire harness 4P connector (Rear safing sensor). There should be less than 1.0 Ω.

SRS FLOOR WIRE HARNESS 4P CONNECTOR (Rear safing sensor)

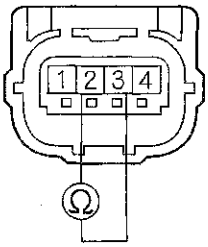

Terminal side of female terminals

Is the resistance as specified?

YES—Faulty rear safing sensor or SRS unit; replace the rear safing sensor (see page 24-227). If the problem is still present, replace the SRS unit (see page 24-221).■

NO—Open in the SRS floor wire harness; replace the SRS floor wire harness.■

DTC Troubleshooting (cont'd)

DTC B2-2x, B2-3x, B2-8x, B2-9x, B2-Ax, B2-Bx ("x" can be 0 thru 9 or A thru F): Internal Failure of the Rear Safing Sensor

NOTE: Before doing this troubleshooting procedure, review SRS Precautions and Procedures (see page 24-23) and General Troubleshooting Information (see page 24-34).

1. Clear the DTC memory (see page 24-35).
2. Turn the ignition switch to ON (II), then wait for 10 seconds.
3. Read the DTC (see page 24-35).

   Is DTC B2-2x, B2-3x, B2-8x, B2-9x, B2-Ax, or B2-Bx indicated?

   YES—Faulty rear safing sensor; replace the rear safing sensor (see page 24-227).■

   NO—Intermittent failure, the system is OK at this time. Go to Troubleshooting Intermittent Failures (see page 24-36). If another DTC is indicated, troubleshoot the DTC.

DTC Ex-11 ("x" can be 0 thru 9 or A thru F): Control Operation Recorded

NOTE:
- Before doing this troubleshooting procedure, review SRS Precautions and Procedures (see page 24-23) and General Troubleshooting Information (see page 24-34).
- 2-door: Before replacing the SRS unit, check the SRS unit software version with the HDS. If the software version is not the latest, update the SRS unit software (see page 24-37) and retest.

1. Clear the DTC memory (see page 24-35).
2. Turn the ignition switch to ON (II), then wait for 10 seconds.
3. Read the DTC (see page 24-35).

   Is DTC Ex-11 indicated?

   YES—Faulty SRS unit; replace the SRS unit (see page 24-221).■

   NO—Intermittent failure, the system is OK at this time. Go to Troubleshooting Intermittent Failures (see page 24-36). If another DTC is indicated, troubleshoot the DTC.

DTC Fx-11 ("x" can be 0 thru 9 or A thru F): Airbags and/or Tensioners Deployment Recorded

NOTE:
- Before doing this troubleshooting procedure, review SRS Precautions and Procedures (see page 24-23) and General Troubleshooting Information (see page 24-34).
- Refer to the DTCs shown:
  - DTC F1-11: Driver's airbag and/or driver's seat belt tensioner deployed.
  - DTC F2-11: Front passenger's airbag and/or front passenger's seat belt tensioner deployed.
  - DTC F3-11: Driver's side airbag, left side curtain airbag, and/or driver's seat belt tensioner deployed.
  - DTC F4-11: Front passenger's side airbag, right side curtain airbag, and/or front seat belt tensioner deployed.
  - DTC F5-11: Both or only one side curtain airbag and seat belt tensioner deployed.
  - DTC F6-11: Left side curtain airbag or right side curtain airbag deployed.

When any airbags or tensioners have deployed, go to Component Replacement/Inspection After Deployment (see page 24-202).■

DTC 51-xx, 52-xx, 53-xx, 54-xx, 55-xx, 57-xx, 58-xx ("x" can be 0 thru 9 or A thru F): Internal Failure of the SRS Unit

NOTE:
- Before troubleshooting any of these DTCs, check the battery/system voltage and battery cable connections. If the voltage is low, repair the charging system or replace the battery before troubleshooting the SRS. If the battery/system voltage is now OK, ask the customer if the battery ever went dead or if the engine was started and run with the battery in a low state of charge. A dead battery may trigger one or more of these DTCs.
- Before doing this troubleshooting procedure, review SRS Precautions and Procedures (see page 24-23) and General Troubleshooting Information (see page 24-34).
- 2-door: Before replacing the SRS unit, check the SRS unit software version with the HDS. If the software version is not the latest, update the SRS unit software (see page 24-37) and retest.

1. Clear the DTC memory (see page 24-35).

2. Turn the ignition switch to ON (II), then wait for 10 seconds.

3. Check that the SRS indicator goes off.

   Does the SRS indicator goes off?

   YES—Intermittent failure, the system is OK at this time. Go to Troubleshooting Intermittent Failures (see page 24-36). If another DTC is indicated, troubleshoot the DTC.

   NO—Replace the SRS unit (see page 24-221).■

DTC Troubleshooting (cont'd)

DTC 53-FF: SRS Unit Programming Error

NOTE:
- This DTC is indicated when a SRS unit update is not completed properly.
- Do not turn the ignition switch to ACC (I) or LOCK (0) while updating the SRS unit. If you turn the ignition switch to ACC (I) or LOCK (0) before you complete the SRS unit update procedure, the SRS unit can be damaged.
- Before doing this troubleshooting procedure, review SRS Precautions and Procedures (see page 24-23) and General Troubleshooting Information (see page 24-34).

1. Do the SRS unit update procedure (see page 24-37).

2. Read the DTC (see page 24-35).

   Is DTC 53-FF indicated?

   YES—Replace the original SRS unit (see page 24-221). ■

   NO—Update is complete. ■

DTC 56-31: Lost Communication With the ECM/PCM (PGM-FI system)

NOTE:
- Before doing this troubleshooting procedure, review SRS Precautions and Procedures (see page 24-23), General Troubleshooting Information (see page 24-34), and Battery Terminal Disconnection and Reconnection (see page 22-89).
- Check for any F-CAN and B-CAN communication DTCs, and troubleshoot those DTCs before doing this troubleshooting procedure.
- 2-door: Before replacing the SRS unit, check the SRS unit software version with the HDS. If the software version is not the latest, update the SRS unit software (see page 24-37) and retest.

1. Clear the DTC memory (see page 24-35).

2. Turn the ignition switch to ON (II), then wait for 10 seconds.

3. Read the DTC (see page 24-35).

   Is DTC 56-31 indicated?

   YES—Go to step 4.

   NO—Intermittent failure, the system is OK at this time. Go to Troubleshooting Intermittent Failures (see page 24-36). If another DTC is indicated, troubleshoot the DTC.

4. Turn the ignition switch to ON (II), and see if the malfunction indicator lamp (MIL) comes on.

   Does the MIL come on?

   YES—Go to the PGM-FI System troubleshooting (see page 11-3).

   NO—Go to step 5.

5. Read the DTC (see page 24-35).

   Are any other DTCs indicated with 56-31?

   YES—Go to step 6.

   NO—Go to the PGM-FI System troubleshooting (see page 11-3).

6. Turn the ignition switch to LOCK (0).

7. Disconnect the negative cable from the battery, then wait at least 3 minutes.

8. Disconnect SRS unit connector A (39P) from the SRS unit (see step 8 on page 24-33).

9. Disconnect ECM/PCM connector A (49P) from the ECM/PCM (see page 11-6).

10. Check for continuity between the terminal No. 16 of SRS unit connector A (39P) and the terminal No. 4 of ECM/PCM connector A (49P), and between the terminal No. 17 of SRS unit connector A (39P) and the terminal No. 3 of the ECM/PCM connector A (49P).

SRS UNIT CONNECTOR A (39P)
Wire side of male terminals

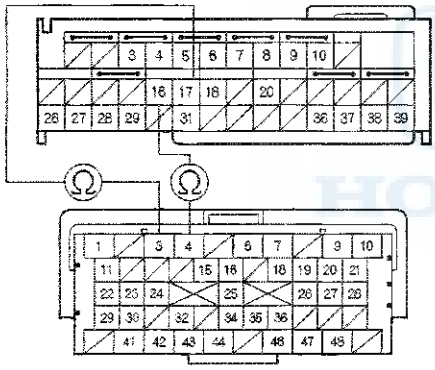

ECM/PCM CONNECTOR A (49P)
Terminal side of male terminals

Is there continuity?

YES—Faulty SRS unit or poor connection at SRS unit connector A (39P) and the SRS unit. Check the connection between the connector and the SRS unit. If the connection is OK, replace the SRS unit (see page 24-221).

NO—Open in the left engine compartment wire harness or the dashboard wire harness; replace the faulty harness.■

DTC 56-32, 56-33: Undefined Data Received From the ECM/PCM (PGM-FI system)

NOTE:
- Before doing this troubleshooting procedure, review SRS Precautions and Procedures (see page 24-23), General Troubleshooting Information (see page 24-34), and Battery Terminal Disconnection and Reconnection (see page 22-89).
- Check for any F-CAN and B-CAN communication DTCs, and troubleshoot those DTCs before doing this troubleshooting procedure.

1. Turn the ignition switch to LOCK (0), then wait for 10 seconds.

2. Turn the ignition switch to ON (II), then wait for 10 seconds.

3. Check that the malfunction indicator lamp (MIL) comes on.

   Does the MIL come on?

   YES—Go to step 4.

   NO—Go to the PGM-FI System troubleshooting (see page 11-3).

4. Clear the DTC memory (see page 24-35).

5. Turn the ignition switch to LOCK (0), and wait for 10 seconds.

6. Turn the ignition switch to ON (II), then wait for 10 seconds.

7. Read the DTC (see page 24-35).

   Is DTC 56-32 or 56-33 indicated?

   YES—Faulty ECM/PCM; replace the ECM/PCM (see page 11-6).■

   NO—Intermittent failure, the system is OK at this time. Go to Troubleshooting Intermittent Failures (see page 24-36). If another DTC is indicated, troubleshoot the DTC.

DTC Troubleshooting (cont'd)

DTC 56-25: Lost Communication With the Gauge Control Module

NOTE:
- Before doing this troubleshooting procedure, review SRS Precautions and Procedures (see page 24-23), General Troubleshooting Information (see page 24-34), and Battery Terminal Disconnection and Reconnection (see page 22-89).
- Check for any F-CAN and B-CAN communication DTCs, and troubleshoot those DTCs before doing this troubleshooting procedure.

1. Release the parking brake, turn the ignition switch to ON (II), and see if the brake system light comes on for 2 seconds and then goes off.

   Does the brake system light come on?

   YES—Go to step 2.

   NO—Faulty gauge control module. Do the gauge control module self-diagnostic function (see page 22-304).

2. Clear the DTC memory (see page 24-35).

3. Turn the ignition switch to ON (II), then wait for 10 seconds.

4. Read the DTC (see page 24-35).

   Is DTC 56-25 indicated?

   YES—Go to step 5.

   NO—Intermittent failure, the system is OK at this time. Go to Troubleshooting Intermittent Failures (see page 24-36). If another DTC is indicated, troubleshoot the DTC.

5. Turn the ignition switch to LOCK (0).

6. Disconnect the negative cable from the battery, then wait at least 3 minutes.

7. Disconnect SRS unit connector A (39P) from the SRS unit (see step 8 on page 24-33).

8. Disconnect gauge control module connector (32P) from the gauge control module (see page 22-324).

9. Install a jumper wire between the terminals No. 16 and No. 17 of SRS unit connector A (39P).

SRS UNIT CONNECTOR A (39P)

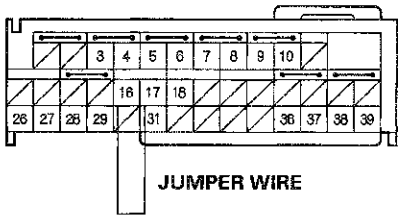

Wire side of female terminals

10. Measure the resistance between the terminals No. 29 and No. 30 of gauge control module connector (32P). There should be less than 1.0 Ω.

GAUGE CONTROL MODULE CONNECTOR (32P)

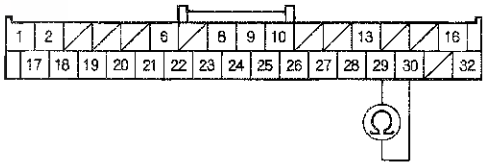

Wire side of female terminals

Is the resistance as specified?

YES—Faulty SRS unit or poor connection at SRS unit connector A (39P) and the SRS unit. Check the connection between the connector and the SRS unit. If the connection is OK, replace the SRS unit (see page 24-221).■

NO—Open between the No. 16 terminal of SRS unit connector A (39P) and the No. 29 terminal of gauge control module connector (32P), or between the No. 17 terminal of SRS unit connector A (39P) and the No. 30 terminal of gauge control module connector (32P); replace the faulty harness.■

DTC 61-1x ("x" can be 0 thru 9 or A thru F): Open in the Driver's Seat Belt Buckle Switch

NOTE:
- Before doing this troubleshooting procedure, review SRS Precautions and Procedures (see page 24-23) and General Troubleshooting Information (see page 24-34).
- 2-door: Before replacing the SRS unit, check the SRS unit software version with the HDS. If the software version is not the latest, update the SRS unit software (see page 24-37) and retest.

1. Clear the DTC memory (see page 24-35).

2. Turn the ignition switch to LOCK (0), then wait for 10 seconds.

3. Turn the ignition switch to ON (II), then buckle and unbuckle the driver's seat belt several times.

4. Read the DTC (see page 24-35).

   Is DTC 61-1x indicated?

   YES—Go to step 5.

   NO—Intermittent failure, the system is OK at this time. Go to Troubleshooting Intermittent Failures (see page 24-36). If another DTC is indicated, troubleshoot the DTC.

5. Turn the ignition switch to LOCK (0).

6. Install a jumper wire between the terminal No. 19 of SRS unit connector B (39P) and body ground.

SRS UNIT CONNECTOR B (39P)

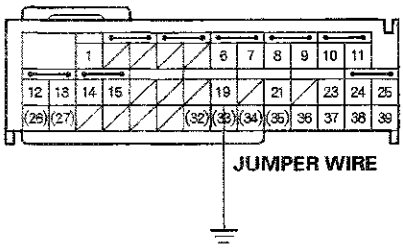

Wire side of female terminals

7. Read the DTC (see page 24-35).

   Is DTC 61-2x indicated?

   YES—Go to step 8.

   NO—Faulty SRS unit or poor connection at SRS unit connector B (39P) and the SRS unit. Check the connection between the connector and the SRS unit. If the connection is OK, replace the SRS unit (see page 24-221). ■

8. Remove the jumper wire.

9. Turn the ignition switch to LOCK (0).

10. Disconnect the SRS floor wire harness 2P connector (A) from the driver's seat belt buckle switch.

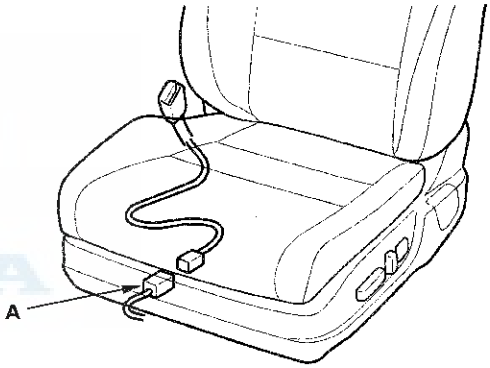

11. Turn the ignition switch to ON (II).

(cont'd)

DTC Troubleshooting (cont'd)

12. Measure the voltage between the terminal No. 19 of SRS unit connector B (39P) and body ground. There should be more than 10 V.

SRS UNIT CONNECTOR B (39P)

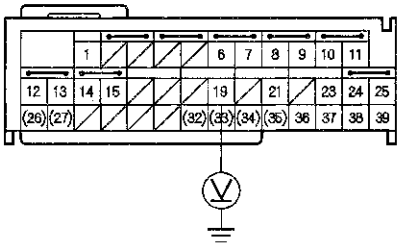

Wire side of female terminals

Is the voltage as specified?

YES—Go to step 13.

NO—Open in the SRS floor wire harness; replace the SRS floor wire harness.■

13. Turn the ignition switch to LOCK (0).

14. Measure the resistance between the terminal No. 1 of the SRS floor wire harness 2P connector and body ground. There should be less than 1.0 Ω.

SRS FLOOR WIRE HARNESS 2P CONNECTOR

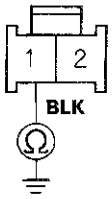

Wire side of female terminals

Is resistance as specified?

YES—Faulty driver's seat belt buckle switch; replace the driver's seat belt buckle assembly (see page 24-10).■

NO—Open in the SRS floor wire harness; replace the SRS floor wire harness.■

DTC 61-2x ("x" can be 0 thru 9 or A thru F): Short in the Driver's Seat Belt Buckle Switch

NOTE: Before doing this troubleshooting procedure, review SRS Precautions and Procedures (see page 24-23) and General Troubleshooting Information (see page 24-34).

1. Clear the DTC memory (see page 24-35).

2. Turn the ignition switch to LOCK (0), then wait for 10 seconds.

3. Turn the ignition switch to ON (II), then buckle and unbuckle the driver's seat belt several times.

4. Read the DTC (see page 24-35).

   Is DTC 61-2x indicated?

   YES—Go to step 5.

   NO—Intermittent failure, the system is OK at this time. Go to Troubleshooting Intermittent Failures (see page 24-36). If another DTC is indicated, troubleshoot the DTC.

5. Turn the ignition switch to LOCK (0).

6. Disconnect the SRS floor wire harness 2P connector (A) from the driver's seat belt buckle switch.

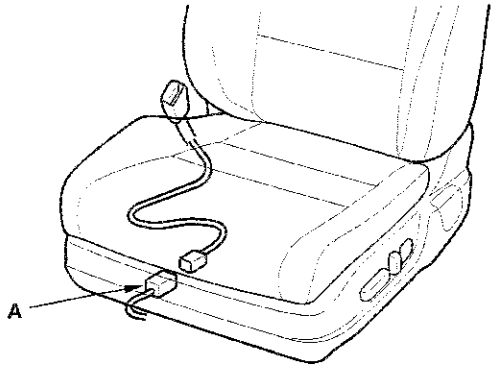

7. Turn the ignition switch to ON (II).

8. Read the DTC (see page 24-35).

   Is DTC 61-2x indicated?

   YES—Short to ground in the SRS floor wire harness; replace the SRS floor wire harness. ■

   NO—Faulty driver's seat belt buckle switch; replace the driver's seat belt buckle assembly (see page 24-10). ■

DTC 62-1x ("x" can be 0 thru 9 or A thru F): Open in the Front Passenger's Seat Belt Buckle Switch

NOTE:
- Before doing this troubleshooting procedure, review SRS Precautions and Procedures (see page 24-23) and General Troubleshooting Information (see page 24-34).
- 2-door: Before replacing the SRS unit, check the SRS unit software version with the HDS. If the software version is not the latest, update the SRS unit software (see page 24-37) and retest.

1. Clear the DTC memory (see page 24-35).

2. Turn the ignition switch to LOCK (0), then wait for 10 seconds.

3. Turn the ignition switch to ON (II), then buckle and unbuckle the driver's seat belt several times.

4. Read the DTC (see page 24-35).

   Is DTC 62-1x indicated?

   YES—Go to step 5.

   NO—Intermittent failure, the system is OK at this time. Go to Troubleshooting Intermittent Failures (see page 24-36). If another DTC is indicated, troubleshoot the DTC.

5. Turn the ignition switch to LOCK (0).

6. Install a jumper wire between the terminal No. 21 of SRS unit connector B (39P) and body ground.

SRS UNIT CONNECTOR B (39P)

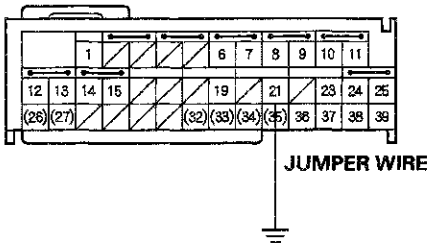

Wire side of female terminals

(cont'd)

DTC Troubleshooting (cont'd)

7. Read the DTC (see page 24-35).

   Is DTC 62-2x indicated?

   YES—Go to step 8.

   NO—Faulty SRS unit or poor connection at SRS unit connector B (39P) and the SRS unit. Check the connection between the connector and the SRS unit. If the connection is OK, replace the SRS unit (see page 24-221).■

8. Remove the jumper wire.

9. Turn the ignition switch to LOCK (0).

10. Disconnect the SRS floor wire harness 2P connector (A) from the front passenger's seat belt buckle switch.

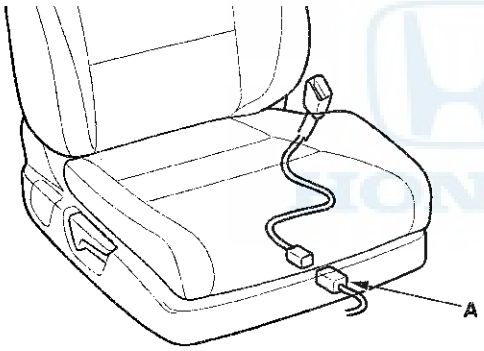

11. Turn the ignition switch to ON (II).

12. Measure the voltage between the terminal No. 21 of SRS unit connector B (39P) and body ground. There should be more than 10 V.

SRS UNIT CONNECTOR B (39P)

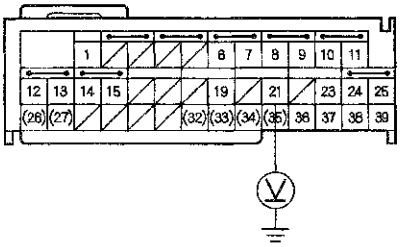

Wire side of female terminals

Is the voltage as specified?

YES—Go to step 13.

NO—Open in the SRS floor wire harness; replace the SRS floor wire harness.■

13. Turn the ignition switch to LOCK (0).

14. Measure the resistance between the terminal No. 1 of the SRS floor wire harness 2P connector and body ground. There should be less than 1.0 Ω.

SRS FLOOR WIRE HARNESS 2P CONNECTOR

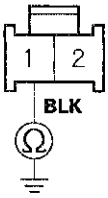

Wire side of female terminals

Is resistance as specified?

YES—Faulty front passenger's seat belt buckle switch; replace the front passenger's seat belt buckle assembly (see page 24-10).■

NO—Open in the SRS floor wire harness; replace the SRS floor wire harness.■

DTC 62-2x ("x" can be 0 thru 9 or A thru F): Short in the Front Passenger's Seat Belt Buckle Switch

NOTE: Before doing this troubleshooting procedure, review SRS Precautions and Procedures (see page 24-23) and General Troubleshooting Information (see page 24-34).

1. Clear the DTC memory (see page 24-35).

2. Turn the ignition switch to LOCK (0), then wait for 10 seconds.

3. Turn the ignition switch to ON (II), then buckle and unbuckle the driver's seat belt several times.

4. Read the DTC (see page 24-35).

   Is DTC 62-2x indicated?

   YES—Go to step 5.

   NO—Intermittent failure, the system is OK at this time. Go to Troubleshooting Intermittent Failures (see page 24-36). If another DTC is indicated, troubleshoot the DTC.

5. Turn the ignition switch to LOCK (0).

6. Disconnect the SRS floor wire harness 2P connector (A) from the front passenger's seat belt buckle switch.

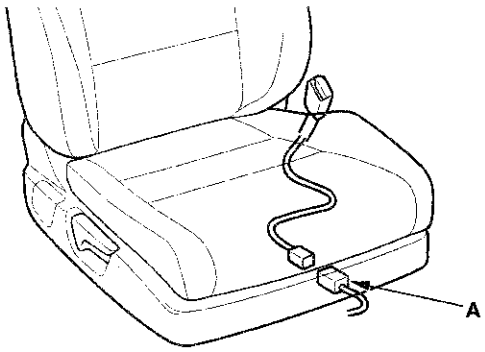

7. Turn the ignition switch to ON (II).

8. Read the DTC (see page 24-35).

   Is DTC 62-2x indicated?

   YES—Short to ground in the SRS floor wire harness; replace the SRS floor wire harness. ■

   NO—Faulty front passenger's seat belt buckle switch; replace the front passenger's seat belt buckle assembly (see page 24-10). ■

DTC Troubleshooting (cont'd)

DTC 71-1x ("x" can be 0 thru 9 or A thru F): Open in the Driver's Seat Position Sensor

NOTE:
- Before doing this troubleshooting procedure, review SRS Precautions and Procedures (see page 24-23) and General Troubleshooting Information (see page 24-34).
- 2-door: Before replacing the SRS unit, check the SRS unit software version with the HDS. If the software version is not the latest, update the SRS unit software (see page 24-37) and retest.

1. Clear the DTC memory (see page 24-35).

2. Turn the ignition switch to ON (II), and wait for 10 seconds.

3. Read the DTC (see page 24-35).

   Is DTC 71-1x indicated?

   YES—Go to step 4.

   NO—Intermittent failure, the system is OK at this time. Go to Troubleshooting Intermittent Failures (see page 24-36). If another DTC is indicated, troubleshoot the DTC.

4. Check the connection between the driver's seat wire harness or seat position sensor harness 2P connector and the driver's seat position sensor (see page 24-232), and ground connection at G701 (see page 22-82).

5. Clear the DTC memory.

6. Read the DTC (see page 24-35).

   Is DTC 71-1x indicated?

   YES—Go to step 7.

   NO—Intermittent failure, the system is OK at this time. Go to Troubleshooting Intermittent Failures (see page 24-36). If another DTC is indicated, troubleshoot the DTC.

7. Turn the ignition switch to LOCK (0), then wait for 10 seconds.

8. Manual seat: Remove the recline cover (see page 20-218).

9. Disconnect the driver's seat wire harness or seat position sensor harness 2P connector (A) from the driver's seat position sensor.

Power seat

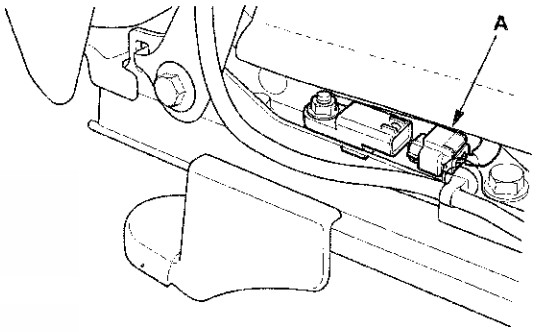

Manual seat

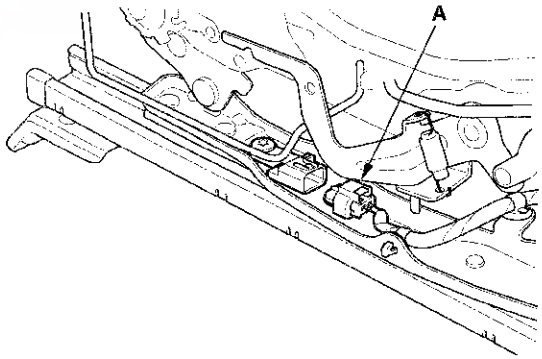

10. Install a jumper wire between the terminals No. 1 and No. 2 of the driver's seat wire harness or seat position sensor harness 2P connector.

DRAIVER'S SEAT WIRE HARNESS OR SEAT POSITION SENSOR HARNESS 2P CONNECTOR

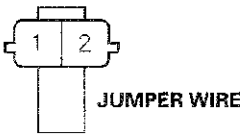

Wire side of female terminals

11. Disconnect SRS unit connector B (39P) from the SRS unit (see step 8 on page 24-33).

12. Measure the resistance between the terminal No. 23 of SRS unit connector B (39P) and body ground. There should be less than 1.0 Ω.

SRS UNIT CONNECTOR B (39P)

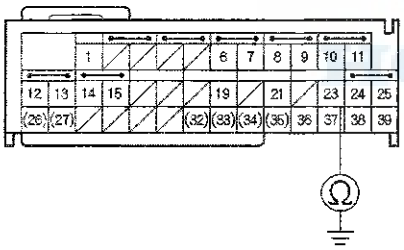

Wire side of female terminals

Is the resistance as specified?

YES—Faulty driver's seat position sensor or SRS unit; replace the driver's seat position sensor (see page 24-232). If the problem is still present, replace the SRS unit (see page 24-221). ■

NO—Open in the SRS floor wire harness, driver's seat wire harness, or seat position sensor harness; replace the faulty harness. ■

DTC 71-2x ("x" can be 0 thru 9 or A thru F): Short in the Driver's Seat Position Sensor

NOTE:
- Before doing this troubleshooting procedure, review SRS Precautions and Procedures (see page 24-23), General Troubleshooting Information (see page 24-34), and Battery Terminal Disconnection and Reconnection (see page 22-89).
- 2-door: Before replacing the SRS unit, check the SRS unit software version with the HDS. If the software version is not the latest, update the SRS unit software (see page 24-37) and retest.

1. Clear the DTC memory (see page 24-35).

2. Turn the ignition switch to ON (II), then wait for 10 seconds.

3. Read the DTC (see page 24-35).

   Is DTC 71-2x indicated?

   YES—Go to step 4.

   NO—Intermittent failure, the system is OK at this time. Go to Troubleshooting Intermittent Failures (see page 24-36). If another DTC is indicated, troubleshoot the DTC.

4. Turn the ignition switch to LOCK (0), then wait for 10 seconds.

(cont'd)

DTC Troubleshooting (cont'd)

5. Manual seat: Remove the recline cover (see page 20-218).

6. Disconnect the driver's seat wire harness or seat position sensor harness 2P connector (A) from the driver's seat position sensor.

Power seat

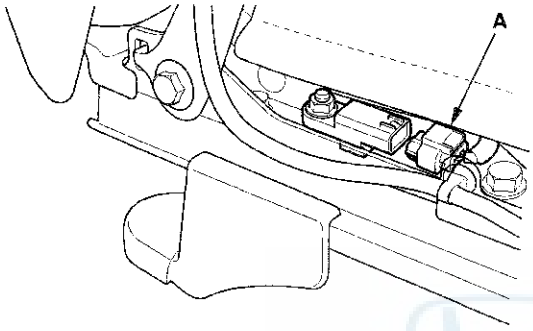

Manual seat

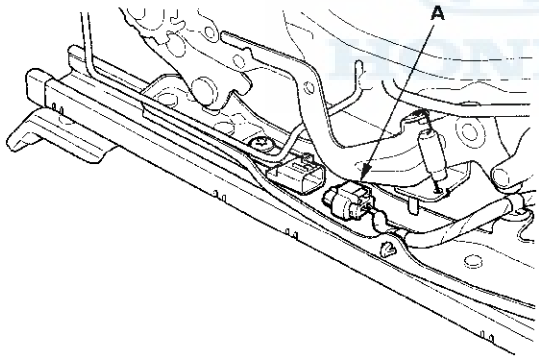

7. Turn the ignition switch to LOCK (0), then wait for 10 seconds.

8. Turn the ignition switch to ON (II), then wait for 10 seconds.

9. Read the DTC (see page 24-35).

Is DTC 71-2x indicated?

YES—Go to step 10.

NO—Intermittent failure, the system is OK at this time. Go to Troubleshooting Intermittent Failures (see page 24-36). If another DTC is indicated, troubleshoot the DTC.

10. Turn the ignition switch to LOCK (0).

11. Disconnect the negative cable from the battery, then wait at least 3 minutes.

12. Disconnect SRS unit connector B (39P) from the SRS unit (see step 8 on page 24-33).

13. Measure the resistance between the terminal No. 23 of SRS unit connector B (39P) and body ground. There should be an open circuit or at least 1 MΩ.

SRS UNIT CONNECTOR B (39P)

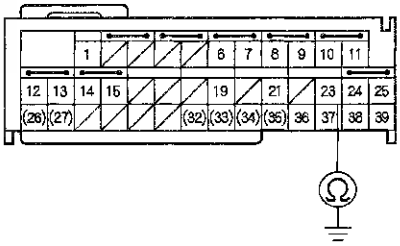

Wire side of female terminals

Is the resistance as specified?

YES—Faulty driver's seat position sensor or SRS unit; replace the driver's seat position sensor (see page 24-232). If the problem is still present, replace the SRS unit (see page 24-221).■

NO—Short in the SRS floor wire harness, driver's seat wire harness, or seat position sensor harness; replace the faulty harness.■

DTC 81-4x, 81-5x ("x" can be 0 thru 9 or A thru F), 81-63, 81-64: Internal Failure of the ODS Unit

NOTE: Before doing this troubleshooting procedure, review SRS Precautions and Procedures (see page 24-23) and General Troubleshooting Information (see page 24-34).

1. Clear the DTC memory (see page 24-35).

2. Turn the ignition switch to ON (II), and check that the SRS indicator come on for about 6 seconds and then goes off.

   Does the SRS indicator stay on, and is DTC 81-4x, 81-5x, 81-63, or 81-64 indicated?

   YES—Go to step 3.

   NO—Intermittent failure, the system is OK at this time. Go to Troubleshooting Intermittent Failures (see page 24-36). If another DTC is indicated, troubleshoot the DTC.

3. Initialize the ODS unit (see page 24-38).

4. Turn the ignition switch to ON (II), and check that the SRS indicator comes on for about 6 seconds and then goes off.

   Does the SRS indicator go off?

   YES—The system is OK at this time.

   NO—Go to step 5.

5. Replace the ODS unit (see page 24-230).

6. Turn the ignition switch to ON (II), and check that the SRS indicator comes on for about 6 seconds and then goes off.

   Does the SRS indicator go off?

   YES—The system is OK at this time.

   NO—Replace the SRS unit (see page 24-221).

DTC 81-61: No Signal From the ODS Unit

DTC 81-62: Not-stipulated Data From the ODS Unit

NOTE:
- Before doing this troubleshooting procedure, review SRS Precautions and Procedures (see page 24-23), General Troubleshooting Information (see page 24-34), and Battery Terminal Disconnection and Reconnection (see page 22-89).
- 2-door: Before replacing the SRS unit, check the SRS unit software version with the HDS. If the software version is not the latest, update the SRS unit software (see page 24-37) and retest.

1. Clear the DTC memory (see page 24-35).

2. Read the DTC (see page 24-35).

   Is DTC 81-61 or 81-62 indicated?

   YES—Go to step 3.

   NO—Intermittent failure, the system is OK at this time. Go to Troubleshooting Intermittent Failures (see page 24-36). If another DTC is indicated, troubleshoot the DTC.

3. Check the connection between the ODS unit harness 18P connector (A) and the ODS unit.

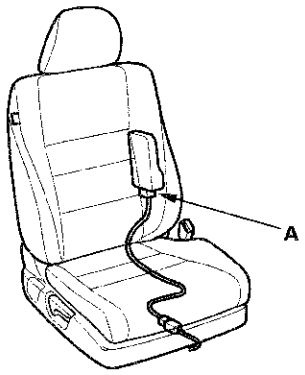

   Is the connection OK?

   YES—Go to step 4.

   NO—Repair the poor connection and retest. If DTC 81-61 or 81-62 is still present, go to step 4.

(cont'd)

DTC Troubleshooting (cont'd)

4. Turn the ignition switch to LOCK (0).

5. Check the No. 12 (7.5A) fuse in the driver's under-dash fuse/relay box.

   Is the fuse OK?

   YES—Go to step 6.

   NO—Replace the fuse, then turn the ignition switch to ON (II). If the fuse blows again, check for a short in the No. 12 (7.5 A) fuse circuit (dashboard wire harness, SRS floor wire harness, or ODS unit harness).

6. Disconnect the ODS unit harness 18P connector (A) from the ODS unit.

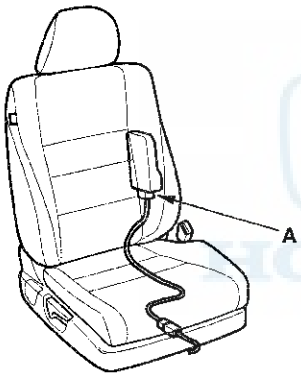

7. Turn the ignition switch to ON (II).

8. Measure the voltage between the terminal No. 1 of the ODS unit harness 18P connector and body ground. There should be battery voltage.

ODS UNIT HARNESS 18P CONNECTOR

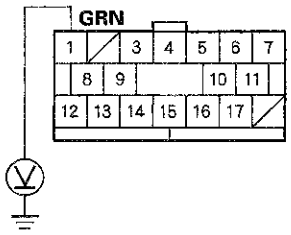

Wire side of female terminals

   Is there battery voltage?

   YES—Go to step 9.

   NO—Open in the dashboard wire harness, SRS floor wire harness, or ODS unit harness; replace the faulty harness. ■

9. Turn the ignition switch to LOCK (0).

10. Measure the resistance between terminal No. 12 of ODS unit harness 18P connector and body ground. There should be less than 1.0 Ω.

ODS UNIT HARNESS 18P CONNECTOR

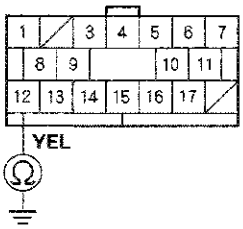

Wire side of female terminals

Is the resistance as specified?

YES—Go to step 11.

NO—Open in the SRS floor wire harness, ODS unit harness, poor connection at the ground (G702) or poor connection at the ODS unit harness 18P connector, and ODS unit. Check the connectors; if the connection is OK, replace the faulty harness. ■

11. Disconnect the negative cable from the battery, then wait at least 3 minutes.

12. Disconnect SRS unit connector B (39P) from the SRS unit (see step 8 on page 24-33).

13. Measure the resistance between the terminal No. 1 of SRS unit connector B (39P) and body ground. There should be an open circuit or at least 1 MΩ.

SRS UNIT CONNECTOR B (39P)

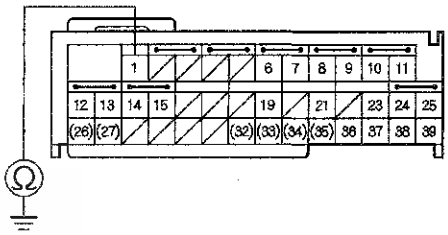

Wire side of female terminals

Is the resistance as specified?

YES—Go to step 14.

NO—Short in the SRS floor wire harness or ODS unit harness; replace the faulty harness. ■

(cont'd)

DTC Troubleshooting (cont'd)

14. Measure the resistance between SRS unit connector B (39P) terminal No. 1 and ODS unit harness 18P connector terminal No.7. There should be less than 1.0 Ω.

ODS UNIT HARNESS 18P CONNECTOR
Wire side of female terminals

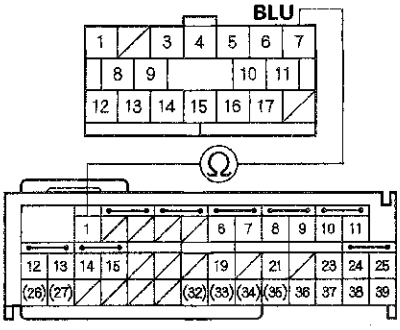

SRS UNIT CONNECTOR B (39P)
Wire side of female terminals

Is the resistance as specified?

YES—Faulty ODS unit or SRS unit; replace the ODS unit (see page 24-230). If the problem is still present, replace the SRS unit (see page 24-221).■

NO—Open in the SRS floor wire harness or ODS unit harness; replace the faulty harness.■

DTC 81-71, 81-78: ODS Unit Not Calibrated
DTC 85-71, 85-78: ODS Unit Not Initialized

NOTE: Before doing this troubleshooting procedure, review SRS Precautions and Procedures (see page 24-23) and General Troubleshooting Information (see page 24-34).

1. Clear the DTC memory (see page 24-35).

2. Turn the ignition switch to ON (II), then wait for 10 seconds.

3. Read the DTC (see page 24-35).

   Is DTC 81-71, 81-78, 85-71, or 85-78 indicated?

   YES—Go to step 4.

   NO—Intermittent failure, the system is OK at this time. Go to Troubleshooting Intermittent Failures (see page 24-36). If another DTC is indicated, troubleshoot the DTC.

4. Calibrate the ODS unit (see page 24-38) or initialize the ODS unit (see page 24-38).

5. Turn the ignition switch to LOCK (0), then wait for 10 seconds.

6. Turn the ignition switch to ON (II), then wait for 10 seconds.

7. Read the DTC (see page 24-35).

   Is DTC 81-71, 81-78, 85-71, or 85-78 indicated?

   YES—Replace the ODS unit (see page 24-230). If the DTC is still present, replace the SRS unit (see page 24-221).■

   NO—Intermittent failure, the system is OK at this time. Go to Troubleshooting Intermittent Failures (see page 24-36). If another DTC is indicated, troubleshoot the DTC.

DTC 81-79: Front Passenger's Weight Sensors Initial Check Failure

NOTE: Before doing this troubleshooting procedure, review SRS Precautions and Procedures (see page 24-23) and General Troubleshooting Information (see page 24-34).

1. Clear the DTC memory (see page 24-35).

2. Turn the ignition switch to ON (II), and check that the SRS indicator comes on for about 6 seconds and then goes off.

   Does the SRS indicator stay on, and is DTC 81-79 indicated?

   YES—Go to step 3.

   NO—Intermittent failure, the system is OK at this time. Go to Troubleshooting Intermittent Failures (see page 24-36). If another DTC is indicated, troubleshoot the DTC.

3. Turn the ignition switch to LOCK (0).

4. Make sure nothing is on the front passenger's seat.

5. Turn the ignition switch to ON (II), and check that the SRS indicator comes on for about 6 seconds and then goes off.

   Does the SRS indicator go off?

   YES—Intermittent failure, the system is OK at this time. Go to Troubleshooting Intermittent Failures (see page 24-36). If another DTC is indicated, troubleshoot the DTC.

   NO—Remove the front passenger's seat assembly (see page 20-181), then reinstall it, calibrate the ODS unit (see page 24-38). If the problem is still present, replace the front passenger's weight sensor for 4-door (see page 24-228), for 2-door (see page 24-229), and if the problem is still present, replace the ODS unit (see page 24-230). ■

DTC Troubleshooting (cont'd)

DTC 82-1x ("x" can be 0 thru 9 or A thru F): No Signal From the Inner Side Front Passenger's Weight Sensor (2-door)

NOTE: Before doing this troubleshooting procedure, review SRS Precautions and Procedures (see page 24-23) and General Troubleshooting Information (see page 24-34).

1. Clear the DTC memory (see page 24-35).
2. Turn the ignition switch to ON (II), then wait for 10 seconds.
3. Read the DTC (see page 24-35).

   Is DTC 82-1x indicated?

   YES—Replace the inner side front passenger's weight sensor (see page 24-229). ■

   NO—Intermittent failure, the system is OK at this time. Go to Troubleshooting Intermittent Failures (see page 24-36). If another DTC is indicated, troubleshoot the DTC.

DTC 83-2x ("x" can be 0 thru 9 or A thru F): No Signal From the Outer Side Front Passenger's Weight Sensor (2-door)

NOTE: Before doing this troubleshooting procedure, review SRS Precautions and Procedures (see page 24-23) and General Troubleshooting Information (see page 24-34).

1. Clear the DTC memory (see page 24-35).
2. Turn the ignition switch to ON (II), then wait for 10 seconds.
3. Read the DTC (see page 24-35).

   Is DTC 83-2x indicated?

   YES—Replace the outer side front passenger's weight sensor (see page 24-229). ■

   NO—Intermittent failure, the system is OK at this time. Go to Troubleshooting Intermittent Failures (see page 24-36). If another DTC is indicated, troubleshoot the DTC.

HONDA

DTC 82-14: No Signal From the Front Passenger's Weight Sensor (front inner side) (4-door)

NOTE: Before doing this troubleshooting procedure, review SRS Precautions and Procedures (see page 24-23) and General Troubleshooting Information (see page 24-34).

1. Clear the DTC memory (see page 24-35).

2. Read the DTC (see page 24-35).

   Is DTC 82-14 indicated?

   YES—Go to step 3.

   NO—Intermittent failure, the system is OK at this time. Go to Troubleshooting Intermittent Failures (see page 24-36).

3. From the SRS INSPECTION menu on the HDS, select SWS DTC CHECK.

   Is an SWS DTC also indicated?

   YES—
   - DTC 14-11: Short to power in the front passenger's weight sensor (front inner side) power circuit; replace the ODS unit harness. ■
   - DTC 14-12: Short to ground in the front passenger's weight sensor (front inner side) power circuit. Go to step 4.
   - DTC 14-13: Open in the front passenger's weight sensor (front inner side) output circuit. Go to step 11.
   - DTC 14-14: Short to ground in the front passenger's weight sensor (front inner side) output circuit. Go to step 19.

   NO—Intermittent failure, the system is OK at this time. Go to Troubleshooting Intermittent Failures (see page 24-36).

4. Turn the ignition switch to LOCK (0).

5. Disconnect the ODS unit harness 3P connector (A) from the front passenger's weight sensor (front inner side).

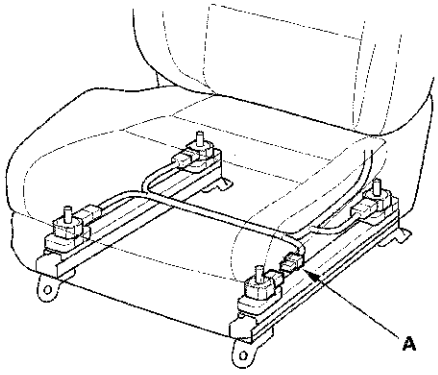

6. Read the DTC.

   Is DTC 14-12 indicated?

   YES—Go to step 7.

   NO—Faulty front passenger's weight sensor (front inner side); replace the front passenger's seat frame including all four front passenger's weight sensors (see page 24-228). ■

7. Turn the ignition switch to LOCK (0).

8. Disconnect the ODS unit harness 18P connector (A) from the ODS unit.

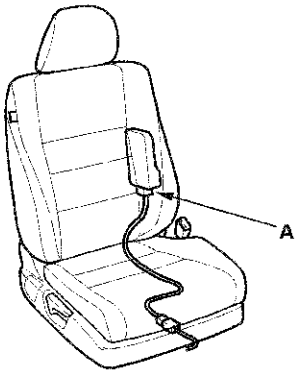

(cont'd)

DTC Troubleshooting (cont'd)

9. Measure the resistance between the terminal No. 3 of the ODS unit harness 18P connector and body ground. There should be an open circuit or at least 1 MΩ.

ODS UNIT HARNESS 18P CONNECTOR

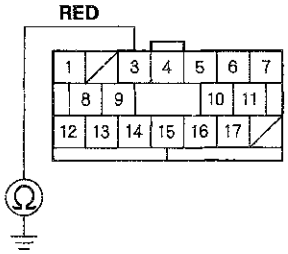

Wire side of female terminals

Is the resistance as specified?

YES—Go to step 10.

NO—Short to ground in the ODS unit harness; replace the ODS unit harness. ■

10. Measure the resistance between the terminals No. 3 and No. 13 of the ODS unit harness 18P connector. There should be an open circuit or at least 1 MΩ.

ODS UNIT HARNESS 18P CONNECTOR

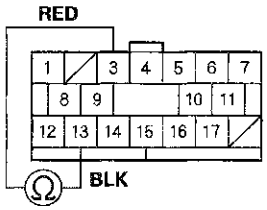

Wire side of female terminals

Is the resistance as specified?

YES—Faulty ODS unit; replace the ODS unit (see page 24-230). ■

NO—Short to ground in the ODS unit harness; replace the ODS unit harness. ■

11. Turn the ignition switch to LOCK (0).

12. Swap the connections between the front inner side front passenger's weight sensor and the rear inner side sensor.

13. Read the DTC.

Is DTC 14-13 indicated?

YES—Go to step 14.

NO—Faulty front passenger's weight sensor (front inner side); replace the front passenger's seat frame including all four front passenger's weight sensors (see page 24-228). ■

14. Turn the ignition switch to LOCK (0).

15. Disconnect the front passenger's weight sensor (front inner side) connector (A) and front passenger's weight sensor (rear inner side) connector (B).

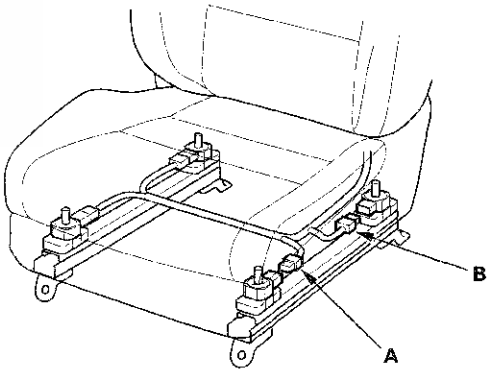

16. Disconnect the ODS unit harness 18P connector (A) from the ODS unit.

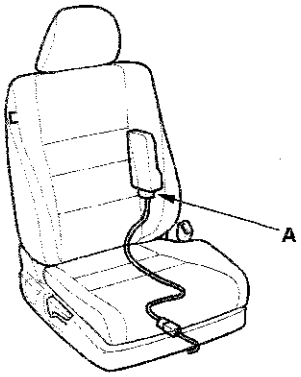

17. Turn the ignition switch to ON (II).

18. Measure the voltage between the terminal No. 8 of the ODS unit harness 18P connector and body ground. There should be less than 0.2 V.

ODS UNIT HARNESS 18P CONNECTOR

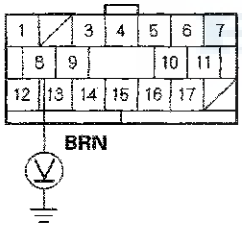

Wire side of female terminals

Is the voltage as specified?

YES—Faulty ODS unit; replace the ODS unit (see page 24-230). ■

NO—Short to power in the ODS unit harness; replace the ODS unit harness. ■

19. Turn the ignition switch to LOCK (0).

20. Disconnect the ODS unit harness 3P connector (A) from the front passenger's weight sensor (front inner side).

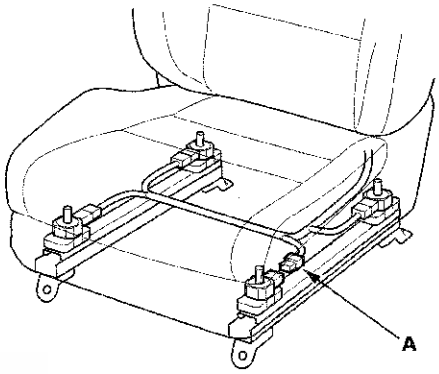

21. Read the DTC.

Is DTC 14-14 indicated?

YES—Go to step 22.

NO—Faulty front passenger's weight sensor (front inner side); replace the seat frame including all four front passenger's weight sensors (see page 24-228). ■

22. Turn the ignition switch to LOCK (0).

23. Disconnect the ODS unit harness 18P connector (A) from the ODS unit.

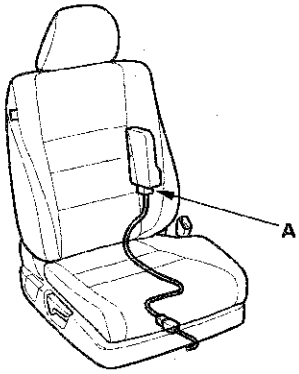

(cont'd)

DTC Troubleshooting (cont'd)

24. Measure the resistance between the terminal No. 8 of the ODS unit harness 18P connector and body ground. There should be an open circuit or at least 1 MΩ.

ODS UNIT HARNESS 18P CONNECTOR

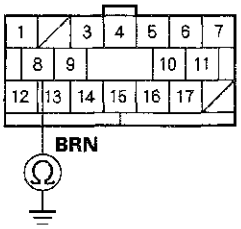

Wire side of female terminals

Is the resistance as specified?

YES—Go to step 25.

NO—Short to ground in the ODS unit harness; replace the ODS unit harness.■

25. Measure the resistance between the terminals No. 8 and No. 13 of the ODS unit harness 18P connector. There should be an open circuit or at least 1 MΩ.

ODS UNIT HARNESS 18P CONNECTOR

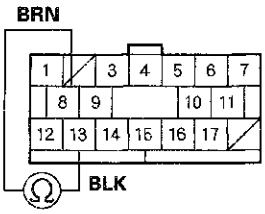

Wire side of female terminals

Is the resistance as specified?

YES—Faulty ODS unit; replace the ODS unit (see page 24-230).■

NO—Short in the ODS unit harness; replace the ODS unit harness.■

DTC 82-16: No Signal From the Front Passenger's Weight Sensor (rear inner side) (4-door)

NOTE: Before doing this troubleshooting procedure, review SRS Precautions and Procedures (see page 24-23) and General Troubleshooting Information (see page 24-34).

1. Clear the DTC memory (see page 24-35).

2. Read the DTC (see page 24-35).

   Is DTC 82-16 indicated?

   YES—Go to step 3.

   NO—Intermittent failure, the system is OK at this time. Go to Troubleshooting Intermittent Failures (see page 24-36).

3. From the SRS INSPECTION menu on the HDS, select SWS DTC CHECK.

   Is an SWS DTC also indicated?

   YES—
   - DTC 16-11: Short to power in the front passenger's weight sensor (rear inner side) power circuit; replace the ODS unit harness.■
   - DTC 16-12: Short to ground in the front passenger's weight sensor (rear inner side) power circuit. Go to step 4.
   - DTC 16-13: Open in the front passenger's weight sensor (rear inner side) output circuit. Go to step 11.
   - DTC 16-14: Short to ground in the front passenger's weight sensor (rear inner side) output circuit. Go to step 19.

   NO—Intermittent failure, the system is OK at this time. Go to Troubleshooting Intermittent Failures (see page 24-36).

4. Turn the ignition switch to LOCK (0).

5. Disconnect the ODS unit harness 3P connector (A) from the front passenger's weight sensor (rear inner side).

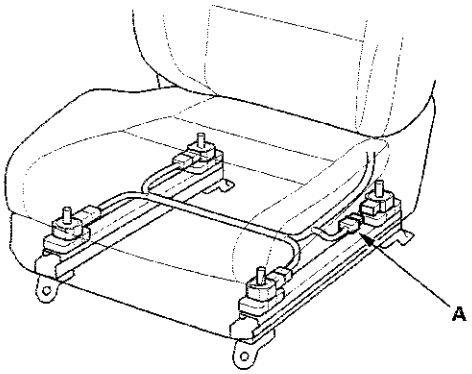

6. Read the DTC.

   Is DTC 16-12 indicated?

   YES—Go to step 7.

   NO—Faulty front passenger's weight sensor (rear inner side); replace the front passenger's seat frame including all four front passenger's weight sensors (see page 24-228).■

7. Turn the ignition switch to LOCK (0).

8. Disconnect the ODS unit harness 18P connector (A) from the ODS unit.

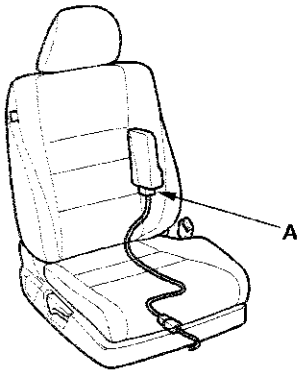

9. Measure the resistance between the terminal No. 4 of the ODS unit harness 18P connector and body ground. There should be an open circuit or at least 1 MΩ.

ODS UNIT HARNESS 18P CONNECTOR

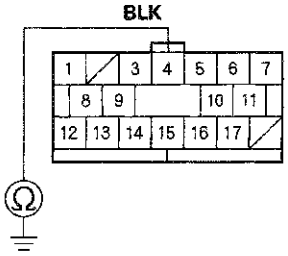

Wire side of female terminals

Is the resistance as specified?

YES—Go to step 10.

NO—Short to ground in the ODS unit harness; replace the ODS unit harness.■

10. Measure the resistance between the terminals No. 4 and No. 14 of the ODS unit harness 18P connector. There should be an open circuit or at least 1 MΩ.

ODS UNIT HARNESS 18P CONNECTOR

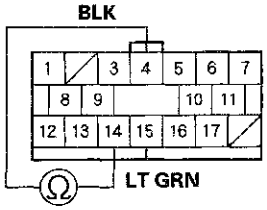

Wire side of female terminals

Is the resistance as specified?

YES—Faulty ODS unit; replace the ODS unit (see page 24-230).■

NO—Short to ground in the ODS unit harness; replace the ODS unit harness.■

(cont'd)

DTC Troubleshooting (cont'd)

11. Turn the ignition switch to LOCK (0).

12. Swap the connections between the rear inner side front passenger's weight sensor and the front inner side sensor.

13. Read the DTC.

    Is DTC 16-13 indicated?

    YES—Go to step 14.

    NO—Faulty front passenger's weight sensor (rear inner side); replace the front passenger's seat frame including all four front passenger's weight sensors (see page 24-228). ■

14. Turn the ignition switch to LOCK (0).

15. Disconnect the front passenger's weight sensor (front inner side) connector (A) and front passenger's weight sensor (rear inner side) connector (B).

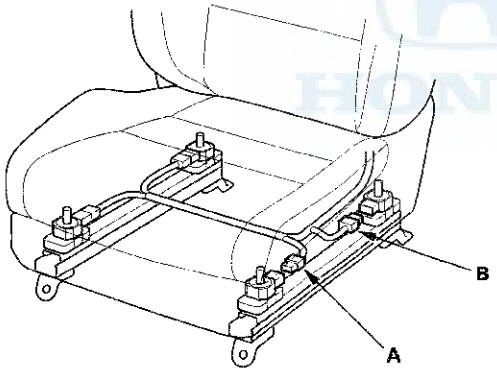

16. Disconnect the ODS unit harness 18P connector (A) from the ODS unit.

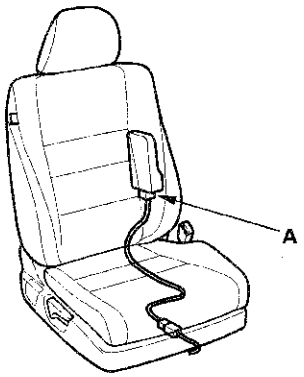

17. Turn the ignition switch to ON (II).

18. Measure the voltage between the terminal No. 9 of the ODS unit harness 18P connector and body ground. There should be less than 0.2 V.

ODS UNIT HARNESS 18P CONNECTOR

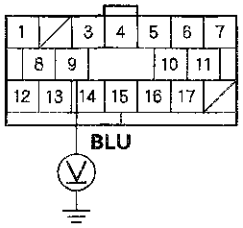

Wire side of female terminals

Is the voltage as specified?

YES—Faulty ODS unit; replace the ODS unit (see page 24-230). ■

NO—Short to power in the ODS unit harness; replace the ODS unit harness. ■

19. Turn the ignition switch to LOCK (0).

20. Disconnect the ODS unit harness 3P connector (A) from the front passenger's weight sensor (rear inner side).

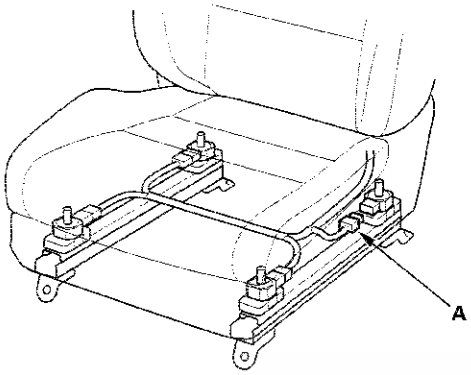

21. Read the DTC.

Is DTC 16-14 indicated?

YES—Go to step 22.

NO—Faulty front passenger's weight sensor (rear inner side); replace the front passenger's seat frame including all four front passenger's weight sensors (see page 24-228). ■

22. Turn the ignition switch to LOCK (0).

23. Disconnect the ODS unit harness 18P connector (A) from the ODS unit.

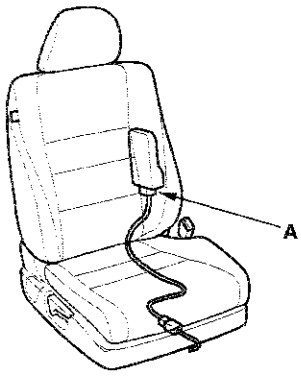

24. Measure the resistance between the terminal No. 9 of the ODS unit harness 18P connector and body ground. There should be an open circuit or at least 1 MΩ.

ODS UNIT HARNESS 18P CONNECTOR

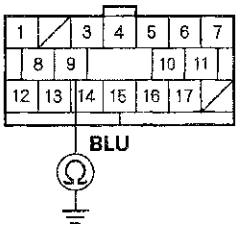

Wire side of female terminals

Is the resistance as specified?

YES—Go to step 25.

NO—Short to ground in the ODS unit harness; replace the ODS unit harness. ■

25. Measure the resistance between the terminals No. 9 and No. 14 of the ODS unit harness 18P connector. There should be an open circuit or at least 1 MΩ.

ODS UNIT HARNESS 18P CONNECTOR

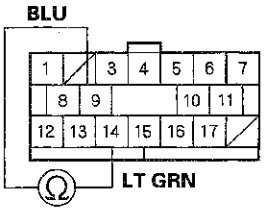

Wire side of female terminals

Is the resistance as specified?

YES—Faulty ODS unit; replace the ODS unit (see page 24-230). ■

NO—Short in the ODS unit harness; replace the ODS unit harness. ■

DTC Troubleshooting (cont'd)

DTC 83-24: No Signal From the Front Passenger's Weight Sensor (front outer side) (4-door)

NOTE: Before doing this troubleshooting procedure, review SRS Precautions and Procedures (see page 24-23) and General Troubleshooting Information (see page 24-34).

1. Clear the DTC memory (see page 24-35).

2. Read the DTC (see page 24-35).

   Is DTC 83-24 indicated?

   YES—Go to step 3.

   NO—Intermittent failure, the system is OK at this time. Go to Troubleshooting Intermittent Failures (see page 24-36).

3. From INSPECTION menu on the HDS, select SWS DTC CHECK.

   Is another DTC also indicated?

   YES—
   - DTC 24-11: Short to power in front passenger's weight sensor (front outer side) power circuit; replace the ODS unit harness.■
   - DTC 24-12: Short to ground in the front passenger's weight sensor (front outer side) power circuit. Go to step 4.
   - DTC 24-13: Open in the front passenger's weight sensor (front outer side) output circuit. Go to step 11.
   - DTC 24-14: Short to ground in the front passenger's weight sensor (front outer side) output circuit. Go to step 19.

   NO—Intermittent failure, the system is OK at this time. Go to Troubleshooting Intermittent Failures (see page 24-36).

4. Turn the ignition switch to LOCK (0).

5. Disconnect the ODS unit harness 3P connector (A) from the front passenger's weight sensor (front outer side).

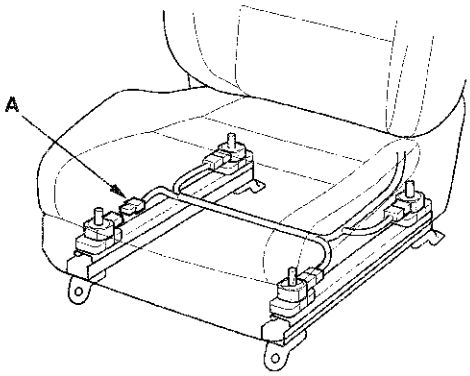

6. Read the DTC.

   Is DTC 24-12 indicated?

   YES—Go to step 7.

   NO—Faulty front passenger's weight sensor (front outer side); replace the front passenger's seat frame including all four front passenger's weight sensors (see page 24-228).■

7. Turn the ignition switch to LOCK (0).

8. Disconnect the ODS unit harness 18P connector (A) from the ODS unit.

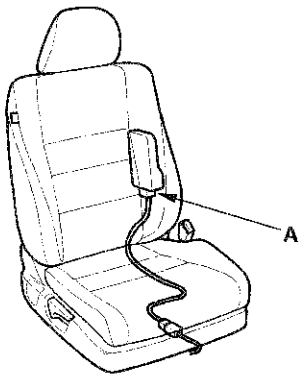

9. Measure the resistance between the terminal No. 5 of the ODS unit harness 18P connector and body ground. There should be an open circuit or at least 1 MΩ.

ODS UNIT HARNESS 18P CONNECTOR

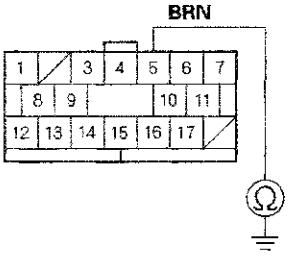

Wire side of female terminals

Is the resistance as specified?

YES—Go to step 10.

NO—Short to ground in the ODS unit harness; replace the ODS unit harness. ■

10. Measure the resistance between the terminals No. 5 and No. 15 of the ODS unit harness 18P connector. There should be an open circuit or at least 1 MΩ.

ODS UNIT HARNESS 18P CONNECTOR

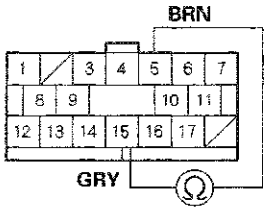

Wire side of female terminals

Is the resistance as specified?

YES—Faulty ODS unit; replace the ODS unit (see page 24-230). ■

NO—Short to ground in the ODS unit harness; replace the ODS unit harness. ■

11. Turn the ignition switch to LOCK (0).

12. Swap the connections between the front outer side front passenger's weight sensor and the rear outer side sensor.

13. Read the DTC.

Is DTC 24-13 indicated?

YES—Go to step 14.

NO—Faulty front passenger's weight sensor (front outer side); replace the front passenger's seat frame including all front passenger's weight sensors (see page 24-228). ■

14. Turn the ignition switch to LOCK (0).

15. Disconnect the front passenger's weight sensor (front outer side) connector (A) and front passenger's weight sensor (rear outer side) connector (B).

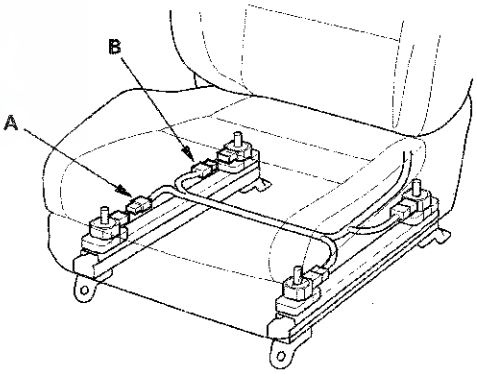

(cont'd)

DTC Troubleshooting (cont'd)

16. Disconnect the ODS unit harness 18P connector (A) from the ODS unit.

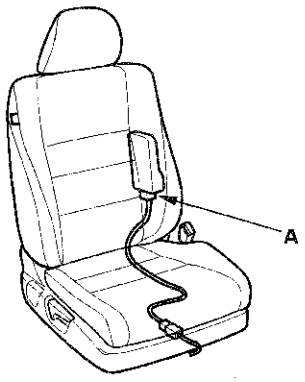

17. Turn the ignition switch to ON (II).

18. Measure the voltage between the terminal No. 10 of the ODS unit harness 18P connector and body ground. There should be less than 0.2 V.

ODS UNIT HARNESS 18P CONNECTOR

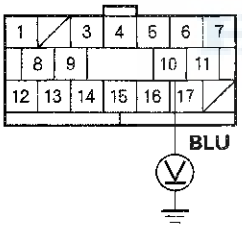

Wire side of female terminals

Is the voltage as specified?

YES—Faulty ODS unit; replace the ODS unit (see page 24-230). ■

NO—Short to power in the ODS unit harness; replace the ODS unit harness. ■

19. Turn the ignition switch to LOCK (0).

20. Disconnect the ODS unit harness 3P connector (A) from the front passenger's weight sensor (front outer side).

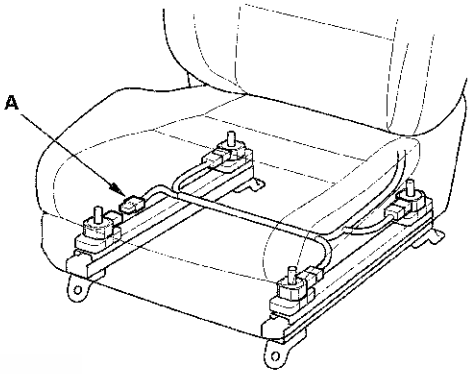

21. Read the DTC.

Is DTC 24-14 indicated?

YES—Go to step 22.

NO—Faulty front passenger's weight sensor (front outer side); replace the front passenger's seat frame including all four front passenger's weight sensors (see page 24-228). ■

22. Turn the ignition switch to LOCK (0).

23. Disconnect the ODS unit harness 18P connector (A) from the ODS unit.

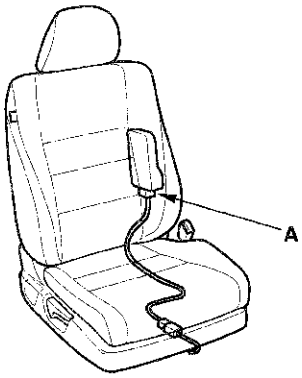

24. Measure the resistance between the terminal No. 10 of the ODS unit harness 18P connector and body ground. There should be an open circuit or at least 1 MΩ.

ODS UNIT HARNESS 18P CONNECTOR

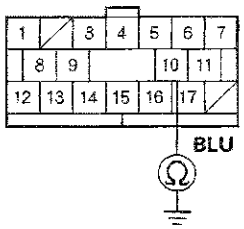

Wire side of female terminals

Is the resistance as specified?

YES—Go to step 25.

NO—Short to ground in the ODS unit harness; replace the ODS unit harness.■

25. Measure the resistance between the terminals No. 10 and No. 15 of the ODS unit harness 18P connector. There should be an open circuit or at least 1 MΩ.

ODS UNIT HARNESS 18P CONNECTOR

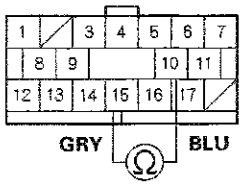

Wire side of female terminals

Is the resistance as specified?

YES—Faulty ODS unit; replace the ODS unit (see page 24-230).■

NO—Short in the ODS unit harness; replace the ODS unit harness.■

DTC 83-26: No Signal From the Front Passenger's Weight Sensor (rear outer side) (4-door)

NOTE: Before doing this troubleshooting procedure, review SRS Precautions and Procedures (see page 24-23) and General Troubleshooting Information (see page 24-34).

1. Clear the DTC memory (see page 24-35).

2. Read the DTC (see page 24-35).

   Is DTC 83-26 indicated?

   YES—Go to step 3.

   NO—Intermittent failure, the system is OK at this time. Go to Troubleshooting Intermittent Failures (see page 24-36).

3. From INSPECTION menu on the HDS, select SWS DTC CHECK.

   Is another DTC also indicated?

   YES—
   - DTC 26-11: Short to power in front passenger's weight sensor (rear outer side) power circuit; replace the ODS unit harness.■
   - DTC 26-12: Short to ground in the front passenger's weight sensor (rear outer side) power circuit. Go to step 4.
   - DTC 26-13: Open in the front passenger's weight sensor (rear outer side) output circuit. Go to step 11.
   - DTC 26-14: Short to ground in the front passenger's weight sensor (rear outer side) output circuit. Go to step 19.

   NO—Intermittent failure, the system is OK at this time. Go to Troubleshooting Intermittent Failures (see page 24-36).

4. Turn the ignition switch to LOCK (0).

(cont'd)

DTC Troubleshooting (cont'd)

5. Disconnect the ODS unit harness 3P connector (A) from the front passenger's weight sensor (rear outer side).

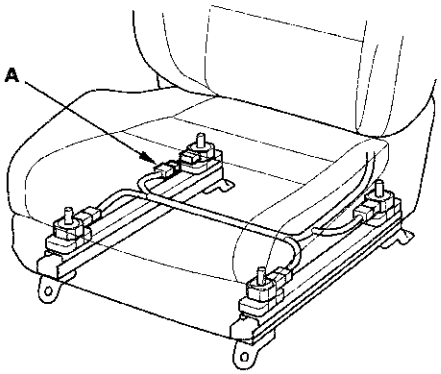

6. Read the DTC.

   Is DTC 26-12 indicated?

   YES—Go to step 7.

   NO—Faulty front passenger's weight sensor (rear outer side); replace the front passenger's seat frame including all four front passenger's weight sensors (see page 24-228).■

7. Turn the ignition switch to LOCK (0).

8. Disconnect the ODS unit harness 18P connector (A) from the ODS unit.

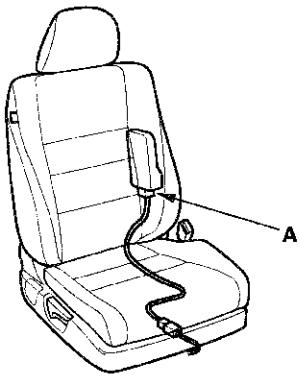

9. Measure the resistance between the terminal No. 6 of the ODS unit harness 18P connector and body ground. There should be an open circuit or at least 1 MΩ.

ODS UNIT HARNESS 18P CONNECTOR

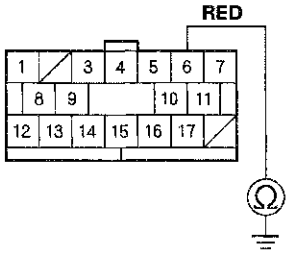

Wire side of female terminals

Is the resistance as specified?

YES—Go to step 10.

NO—Short to ground in the ODS unit harness; replace the ODS unit harness.■

10. Measure the resistance between the terminals No. 6 and No. 16 of the ODS unit harness 18P connector. There should be an open circuit or at least 1 MΩ.

ODS UNIT HARNESS 18P CONNECTOR

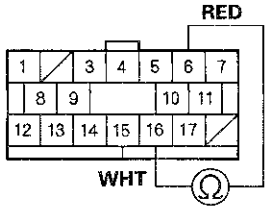

Wire side of female terminals

Is the resistance as specified?

YES—Faulty ODS unit; replace the ODS unit (see page 24-230).■

NO—Short to ground in the ODS unit harness; replace the ODS unit harness.■

11. Turn the ignition switch to LOCK (0).

12. Swap the connections between the rear outer side front passenger's weight sensor and the front outer side sensor.

13. Read the DTC.

    Is DTC 26-13 indicated?

    YES—Go to step 14.

    NO—Faulty front passenger's weight sensor (rear outer side); replace the front passenger's seat frame including all four front passenger's weight sensors (see page 24-228). ■

14. Turn the ignition switch to LOCK (0).

15. Disconnect the front passenger's weight sensor (front outer side) connector (A) and front passenger's weight sensor (rear outer side) connector (B).

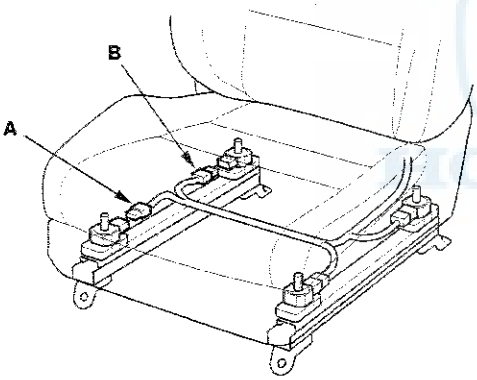

16. Disconnect the ODS unit harness 18P connector (A) from the ODS unit.

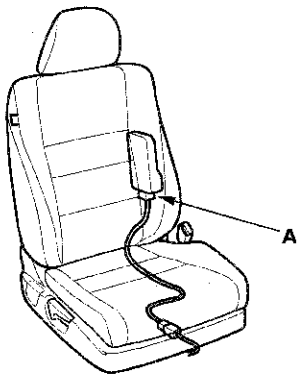

17. Turn the ignition switch to ON (II).

18. Measure the voltage between the terminal No. 11 of the ODS unit harness 18P connector and body ground. There should be less than 0.2 V.

ODS UNIT HARNESS 18P CONNECTOR

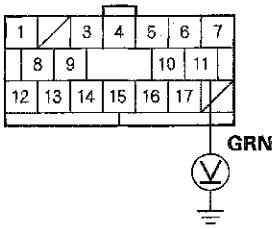

Wire side of female terminals

Is the voltage as specified?

YES—Faulty ODS unit; replace the ODS unit (see page 24-230). ■

NO—Short to power in the ODS unit harness; replace the ODS unit harness. ■

(cont'd)

DTC Troubleshooting (cont'd)

19. Turn the ignition switch to LOCK (0).

20. Disconnect the ODS unit harness 3P connector (A) from the front passenger's weight sensor (rear outer side).

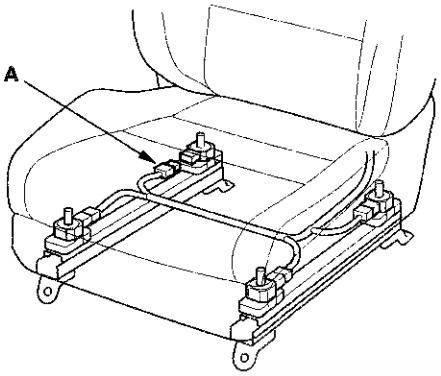

21. Read the DTC.

    Is DTC 26-14 indicated?

    YES—Go to step 22.

    NO—Faulty front passenger's weight sensor (rear outer side); replace the front passenger's seat frame including all four front passenger's weight sensors (see page 24-228).■

22. Turn the ignition switch to LOCK (0).

23. Disconnect the ODS unit harness 18P connector (A) from the ODS unit.

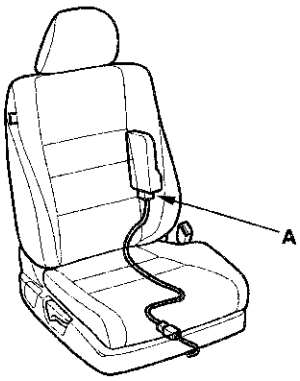

24. Measure the resistance between the terminal No. 11 of the ODS unit harness 18P connector and body ground. There should be an open circuit or at least 1 MΩ.

ODS UNIT HARNESS 18P CONNECTOR

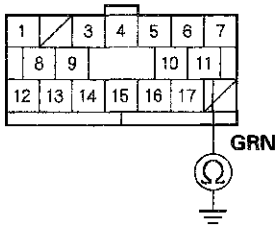

Wire side of female terminals

Is the resistance as specified?

YES—Go to step 25.

NO—Short to ground in the ODS unit harness; replace the ODS unit harness.■

25. Measure the resistance between the terminals No. 11 and No. 16 of the ODS unit harness 18P connector. There should be an open circuit or at least 1 MΩ.

ODS UNIT HARNESS 18P CONNECTOR

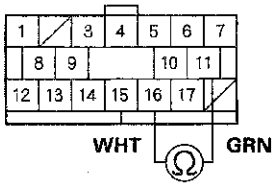

Wire side of female terminals

Is the resistance as specified?

YES—Faulty ODS unit; replace the ODS unit (see page 24-230).■

NO—Short in the ODS unit harness; replace the ODS unit harness.■

DTC 82-15: Internal Failure of the Front Passenger's Weight Sensor (front inner side) (4-door)

DTC 82-17: Internal Failure of the Front Passenger's Weight Sensor (rear inner side) (4-door)

DTC 83-25: Internal Failure of the Front Passenger's Weight Sensor (front outer side) (4-door)

DTC 83-27: Internal Failure of the Front Passenger's Weight Sensor (rear outer side) (4-door)

NOTE: Before doing this troubleshooting procedure, review SRS Precautions and Procedures (see page 24-23) and General Troubleshooting Information (see page 24-34).

1. Clear the DTC memory (see page 24-35).

2. Read the DTC (see page 24-35).

   Is DTC82-15, 82-17, 83-25, or 83-27 indicated?

   YES—Faulty front passenger's weight sensor; replace the front passenger's seat frame including all four front passenger's weight sensors (see page 24-228). ■

   NO—Intermittent failure, the system is OK at this time. Go to Troubleshooting Intermittent Failures (see page 24-36).

DTC 85-4x, 85-5x ("x" can be 0 thru 9 or A thru F), 85-63, 85-64: Internal Failure of ODS Unit

NOTE: Before doing this troubleshooting procedure, review SRS Precautions and Procedures (see page 24-23) and General Troubleshooting Information (see page 24-34).

1. Clear the DTC memory (see page 24-35).

2. Turn the ignition switch to ON (II), and check that the SRS indicator comes on for about 6 seconds and then goes off.

   Does the SRS indicator go off?

   YES—Intermittent failure, the system is OK at this time. Go to Troubleshooting Intermittent Failures (see page 24-36).

   NO—Go to step 3.

3. Initialize the ODS unit (see page 24-38).

4. Turn the ignition switch to ON (II), and check that the SRS indicator comes on for about 6 seconds and then goes off.

   Does the SRS indicator go off?

   YES—The system is OK. ■

   NO—Replace the ODS unit (see page 24-230) and retest. If the DTC is still present, replace the SRS unit (see page 24-221). ■

DTC Troubleshooting (cont'd)

DTC 85-61: No Signal From the ODS Unit

DTC 85-62: Non-stipulated Data From the ODS Unit

NOTE: Before doing this troubleshooting procedure, review SRS Precautions and Procedures (see page 24-23), General Troubleshooting Information (see page 24-34), and Battery Terminal Disconnection and Reconnection (see page 22-89).

1. Clear the DTC memory (see page 24-35).

2. Read the DTC (see page 24-35).

   Is DTC85-61 or 85-62 indicated?

   YES—Go to step 3.

   NO—Intermittent failure, the system is OK at this time. Go to Troubleshooting Intermittent Failures (see page 24-36). If another DTC is indicated, troubleshoot the DTC.

3. Check the No. 12 (7.5 A) fuse in the driver's under-dash fuse/relay box.

   Is the fuse OK?

   YES—Go to step 4.

   NO—Replace the fuse, then turn the ignition switch to ON (II). If the fuse blows again, check for a short in the No. 12 (7.5 A) fuse circuit (dashboard wire harness, SRS floor wire harness, or ODS unit harness).

4. Disconnect the ODS unit harness 18P connector (A) from the ODS unit.

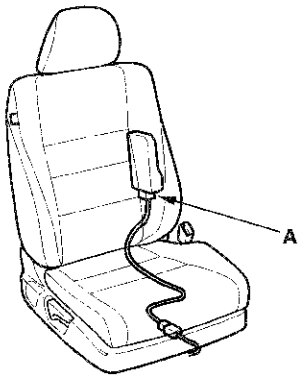

5. Turn the ignition switch to ON (II).

6. Measure the voltage between the terminal No. 1 of the ODS unit harness 18P connector and body ground. There should be battery voltage.

ODS UNIT HARNESS 18P CONNECTOR

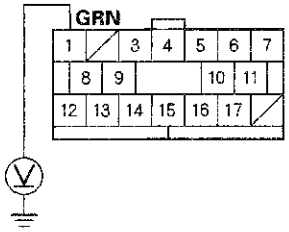

Wire side of female terminals

Is there battery voltage?

YES—Go to step 7.

NO—Open between the No. 12 (7.5 A) fuse in the driver's under-dash fuse/relay box and the terminal No. 1 of the ODS unit 18P connector (dashboard wire harness, SRS floor wire harness, or ODS unit harness); replace the faulty harness. ■

7. Turn the ignition switch to LOCK (0).

8. Measure the resistance between the terminal No. 12 of the ODS unit harness 18P connector and body ground. There should be less than 1.0 Ω

ODS UNIT HARNESS 18P CONNECTOR

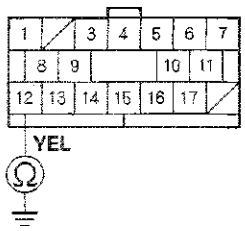

Wire side of female terminals

Is resistance as specified?

YES—Go to step 9.

NO—Open between the No. 12 terminal of the ODS unit 18P connector and body ground (G702) or poor connection at G702: ■

- 2-door (see page 22-56)
- 4-door (see page 22-54)

9. Disconnect the negative cable from the battery, then wait at least 3 minutes.

10. Disconnect SRS unit connector B (39P) from the SRS unit (see step 8 on page 24-33).

11. Measure the resistance between the terminal No. 1 of SRS unit connector B (39P) and body ground. There should be an open circuit or at least 1 MΩ.

SRS UNIT CONNECTOR B (39P)

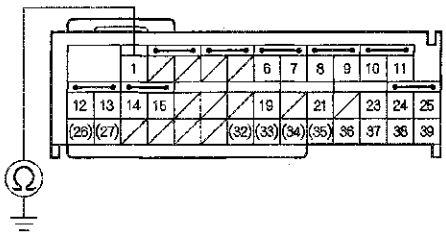

Wire side of female terminals

Is the resistance as specified?

YES—Go to step 12.

NO—Short to ground between the terminal No. 1 of SRS unit connector B (39P) and the terminal No. 7 of the ODS unit 18P connector (dashboard wire harness, SRS floor wire harness, or ODS unit harness); replace the faulty harness. ■

(cont'd)

DTC Troubleshooting (cont'd)

12. Measure the resistance between the terminal No. 1 of SRS unit connector B (39P) and the terminal No. 7 of the ODS unit 18P harness connector. There should be less than 1.0 Ω.

ODS UNIT HARNESS 18P CONNECTOR
Wire side of female terminals

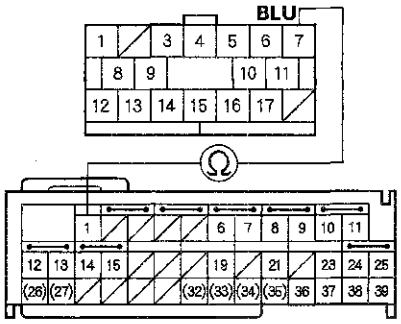

SRS UNIT CONNECTOR B (39P)
Wire side of female terminals

Is the resistance as specified?

YES—Go to step 17.

NO—Open between the terminal No. 1 of the SRS unit connector B (39P) and the terminal No. 7 of the ODS unit 18P connector (dashboard wire harness, SRS floor wire harness, or ODS unit harness); replace the faulty harness.■

13. Reconnect the negative cable to the battery.

14. Turn the ignition switch to ON (II).

15. Measure the voltage between the terminal No. 1 of SRS unit connector B (39P) and body ground. There should be less than 0.2 V.

SRS UNIT CONNECTOR B (39P)

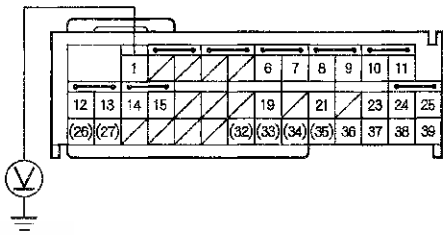

Wire side of female terminals

Is there battery voltage?

YES—Go to step 16.

NO—Short to power between the terminal No. 1 of SRS unit connector B (39P) and the terminal No. 7 of the ODS unit 18P connector (dashboard wire harness, SRS floor wire harness, or ODS unit harness); replace the faulty harness.■

16. Replace the ODS unit (see page 24-230).

17. Clear the DTC (see page 24-35).

18. Read the DTC (see page 24-35).

Is DTC 85-61 or 85-62 indicated?

YES—Replace the SRS unit (see page 24-221).■

NO—Intermittent failure, the system is OK at this time. Go to Troubleshooting Intermittent Failures (see page 24-36). If another DTC is indicated, troubleshoot the DTC.

DTC 85-79: OPDS Initial Check Failure

NOTE: Before doing this troubleshooting procedure, review SRS Precautions and Procedures (see page 24-23) and General Troubleshooting Information (see page 24-34).

1. Clear the DTC memory (see page 24-35).

2. Turn the ignition switch to ON (II), and check that the SRS indicator comes on for about 6 seconds and then goes off.

   Does the SRS indicator go off?

   YES—Intermittent failure, the system is OK at this time. Go to Troubleshooting Intermittent Failures (see page 24-36).

   NO—Go to step 3.

3. Turn the ignition switch to LOCK (0).

4. Make sure nothing is on the front passenger's seat.

5. Clear the DTC memory (see page 24-35).

6. Turn the ignition switch to ON (II), and check that the SRS indicator comes on for about 6 seconds and then goes off.

   Does the SRS indicator go off?

   YES—Intermittent failure, the system is OK at this time. Go to Troubleshooting Intermittent Failures (see page 24-36).

   NO—Go to step 7.

7. Initialize the ODS unit (see page 24-38).

8. Turn the ignition switch to ON (II), and check that the SRS indicator comes on for about 6 seconds and then goes off.

   Does the SRS indicator go off?

   YES—The system is OK.■

   NO—Replace the ODS unit (see page 24-230) and retest. If the DTC is still present, replace the SRS unit.■

DTC Troubleshooting (cont'd)

DTC 86-1x ("x" can be 0 thru 9 or A thru F):
Faulty OPDS Seat-Back Sensor

DTC 86-2x ("x" can be 0 thru 9 or A thru F):
Faulty OPDS Seat Support Sensor

NOTE: Before doing this troubleshooting procedure, review SRS Precautions and Procedures (see page 24-23) and General Troubleshooting Information (see page 24-34).

1. Clear the DTC memory (see page 24-35).

2. Read the DTC (see page 24-35).

   Is DTC 85-1x or 85-2x indicated?

   YES—Go to step 3.

   NO—Intermittent failure, the system is OK at this time. Go to Troubleshooting Intermittent Failures (see page 24-36). If another DTC is indicated, troubleshoot the DTC.

3. Check the connection at the ODS unit harness 18P connector (A) and the sensor connectors (B).

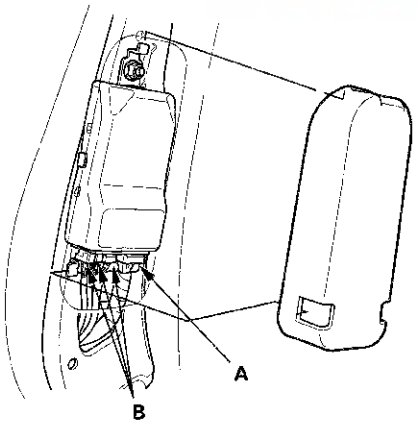

   Are the connections OK?

   YES—Go to step 4.

   NO—Repair the poor connection, and clear the DTC.■

4. Replace the front passenger's seat-back cover/pad:

   - 2-door (see page 20-199)
   - 4-door (see page 20-205)

5. Initialize the ODS unit (see page 24-38).

6. Clear the DTC memory (see page 24-35).

7. Read the DTC (see page 24-35).

   Is DTC 86-1x or 86-2x indicated?

   YES—Replace the ODS unit (see page 24-230). If the problem is still present, replace the SRS unit (see page 24-221).■

   NO—The system is OK.■

DTC 92-1x ("x" can be 0 thru 9 or A thru F): Short to Power in the Front Passenger's Airbag Cutoff Indicator

NOTE:
- Before doing this troubleshooting procedure, review SRS Precautions and Procedures (see page 24-23), General Troubleshooting Information (see page 24-34), and Battery Terminal Disconnection and Reconnection (see page 22-89).
- 2-door: Before replacing the SRS unit, check the SRS unit software version with the HDS. If the software version is not the latest, update the SRS unit software (see page 24-37) and retest.

1. Clear the DTC memory (see page 24-35).

2. Turn the ignition switch to ON (II), then wait for 10 seconds.

3. Read the DTC (see page 24-35).

   Is DTC 92-1x indicated?

   YES—Go to step 4.

   NO—Intermittent failure, the system is OK at this time. Go to Troubleshooting Intermittent Failures (see page 24-36). If another DTC is indicated, troubleshoot the DTC.

4. Disconnect the passenger's airbag cutoff indicator 6P connector (see page 24-234).

5. Turn the ignition switch to LOCK (0).

6. Disconnect the negative cable from the battery, then wait at least 3 minutes.

7. Disconnect SRS unit connector A (39P) from the SRS unit (see step 8 on page 24-33).

8. Reconnect the negative cable to the battery.

9. Turn the ignition switch to ON (II).

10. Measure the voltage between the terminal No. 20 of SRS unit connector A (39P) and body ground. There should be less than 0.2 V.

SRS UNIT CONNECTOR A (39P)

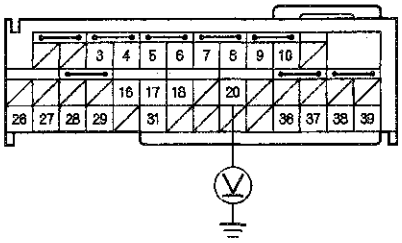

Wire side of female terminals

Is the voltage as specified?

YES—Faulty SRS unit or passenger's airbag cutoff indicator; replace the passenger's airbag cutoff indicator (see page 24-234). If the problem is still present, replace the SRS unit (see page 24-221).■

NO—Short to power in the dashboard wire harness; replace the dashboard wire harness.■

DTC Troubleshooting (cont'd)

DTC 92-2x ("x" can be 0 thru 9 or A thru F): Open or Short to Ground in the Passenger's Airbag Cutoff Indicator

NOTE:
- Before doing this troubleshooting procedure, review SRS Precautions and Procedures (see page 24-23), General Troubleshooting Information (see page 24-34), and Battery Terminal Disconnection and Reconnection (see page 22-89).
- 2-door: Before replacing the SRS unit, check the SRS unit software version with the HDS. If the software version is not the latest, update the SRS unit software (see page 24-37) and retest.

1. Clear the DTC memory (see page 24-35).
2. Turn the ignition switch to ON (II), then wait for 10 seconds.
3. Read the DTC (see page 24-35).

   Is DTC 92-2x indicated?

   YES—Go to step 4.

   NO—Intermittent failure, the system is OK at this time. Go to Troubleshooting Intermittent Failures (see page 24-36). If another DTC is indicated, troubleshoot the DTC.
4. Disconnect the passenger's airbag cutoff indicator 6P connector (see page 24-234).
5. Turn the ignition switch to LOCK (0).
6. Disconnect the negative cable from the battery, then wait at least 3 minutes.
7. Disconnect SRS unit connector A (39P) from the SRS unit (see step 8 on page 24-33).
8. Measure the resistance between the terminal No. 20 of SRS unit connector A (39P) and the terminal No. 5 of the passenger's airbag cutoff indicator 6P connector. There should be less than 1.0 Ω.

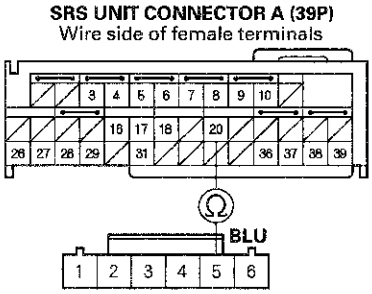

   Is the resistance as specified?

   YES—Go to step 9.

   NO—Open in the dashboard wire harness; replace the dashboard wire harness. ■
9. Measure the resistance betweene the terminal No. 20 of SRS unit connector A (39P) and body ground. There should be more than 1 MΩ.

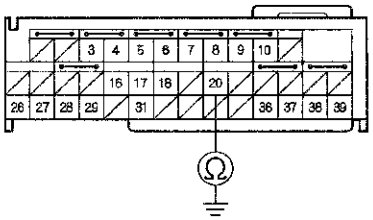

   Is the resistance as specified?

   YES—Faulty SRS unit or passenger's airbag cutoff indicator; replace the passenger's airbag cutoff indicator (see page 24-234). If the problem is still present, replace the SRS unit (see page 24-221). ■

   NO—Short to ground in the dashboard wire harness; replace the dashboard wire harness. ■

DTC A1-1x ("x" can be 0 thru 9 or A thru F): Faulty Power Supply (VA line)

NOTE:
- Before doing this troubleshooting procedure, review SRS Precautions and Procedures (see page 24-23), General Troubleshooting Information (see page 24-34), and Battery Terminal Disconnection and Reconnection (see page 22-89).
- 2-door: Before replacing the SRS unit, check the SRS unit software version with the HDS. If the software version is not the latest, update the SRS unit software (see page 24-37) and retest.

1. Clear the DTC memory (see page 24-35).

2. Turn the ignition switch to ON (II), then wait for 10 seconds.

3. Read the DTC (see page 24-35).

   Is DTC A1-1x indicated?

   YES—Go to step 4.

   NO—Intermittent failure, the system is OK at this time. Go to Troubleshooting Intermittent Failures (see page 24-36). If another DTC is indicated, troubleshoot the DTC.

4. Turn the ignition switch to LOCK (0).

5. Check the No. 12 (7.5 A) fuse in the driver's under-dash fuse/relay box.

   Is the fuse OK?

   YES—Go to step 6.

   NO—Replace the fuse, then turn the ignition switch to ON (II). If the fuse blows again, check for a short in the No. 12 (7.5 A) fuse circuit (dashboard wire harness, SRS floor wire harness, or ODS unit harness).■

6. Turn the ignition switch to LOCK (0).

7. Disconnect the negative cable from the battery, then wait at least 3 minutes.

8. Disconnect SRS unit connector A (39P) from the SRS unit (see step 8 on page 24-33).

9. Reconnect the negative cable to the battery.

10. Turn the ignition switch to ON (II).

11. Measure the voltage between the terminal No. 26 of SRS unit connector A (39P) and body ground. There should be battery voltage.

SRS UNIT CONNECTOR A (39P)

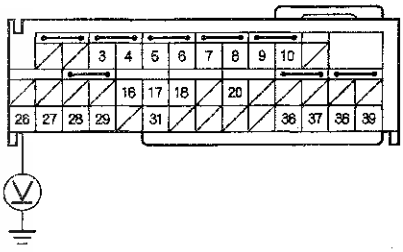

Wire side of female terminals

Is the voltage as specified?

YES—Faulty SRS unit or poor connection at SRS unit connector A (39P) and the SRS unit; check the connection. If the connection is OK, replace the SRS unit (see page 24-221).■

NO—Open in the dashboard wire harness; replace the dashboard wire harness.■

DTC Troubleshooting (cont'd)

DTC A2-1x ("x" can be 0 thru 9 or A thru F): Faulty Power Supply (VB line)

NOTE:
- Before doing this troubleshooting procedure, review SRS Precautions and Procedures (see page 24-23), General Troubleshooting Information (see page 24-34), and Battery Terminal Disconnection and Reconnection (see page 22-89).
- 2-door: Before replacing the SRS unit, check the SRS unit software version with the HDS. If the software version is not the latest, update the SRS unit software (see page 24-37) and retest.

1. Clear the DTC memory (see page 24-35).
2. Turn the ignition switch to ON (II), then wait for 10 seconds.
3. Read the DTC (see page 24-35).

   Is DTC A2-1x indicated?

   YES—Go to step 4.

   NO—Intermittent failure, the system is OK at this time. Go to Troubleshooting Intermittent Failures (see page 24-36). If another DTC is indicated, troubleshoot the DTC.

4. Turn the ignition switch to LOCK (0).
5. Check the No. 11 (10 A) fuse in the driver's under-dash fuse/relay box.

   Is the fuse OK?

   YES—Go to step 6.

   NO—Replace the fuse, then turn the ignition switch to ON (II). If the fuse blows again, check for a Short to ground in the dashboard wire harness or in the driver's under-dash fuse/relay box No. 11 (10 A) fuse circuit; replace the dashboard wire harness. If the problem is still there, replace the driver's under-dash fuse/relay box (see page 22-84). ■

6. Turn the ignition switch to LOCK (0).
7. Disconnect the negative cable from the battery, then wait at least 3 minutes.
8. Disconnect SRS unit connector A (39P) from the SRS unit (see step 8 on page 24-33).
9. Reconnect the negative cable to the battery.
10. Turn the ignition switch to ON (II).
11. Measure the voltage between the terminal No. 27 of SRS unit connector A (39P) and body ground. There should be battery voltage.

SRS UNIT CONNECTOR A (39P)

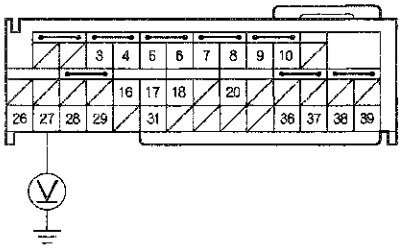

Wire side of male terminals

Is the voltage as specified?

YES—Faulty SRS unit or poor connection at SRS unit connector A (39P) and the SRS unit; check the connection. If the connection is OK, replace the SRS unit (see page 24-221). ■

NO—Open in the dashboard wire harness; replace the dashboard wire harness. ■

DTC A3-1x ("x" can be 0 thru 9 or A thru F): SRS Connector A Not Properly Installed

NOTE:
- Before doing this troubleshooting procedure, review SRS Precautions and Procedures (see page 24-23), General Troubleshooting Information (see page 24-34), and Battery Terminal Disconnection and Reconnection (see page 22-89).
- 2-door: Before replacing the SRS unit, check the SRS unit software version with the HDS. If the software version is not the latest, update the SRS unit software (see page 24-37) and retest.

1. Clear the DTC memory (see page 24-35).

2. Turn the ignition switch to ON (II), then wait for 10 seconds.

3. Read the DTC (see page 24-35).

   Is DTC A3-1x indicated?

   YES—Go to step 4.

   NO—Intermittent failure, the system is OK at this time. Go to Troubleshooting Intermittent Failures (see page 24-36). If another DTC is indicated, troubleshoot the DTC.

4. Check the connection between SRS unit connector A (39P) and the SRS unit.

   Is the connection OK?

   YES—Go to step 5.

   NO—Properly reinstall the connector and retest. If the connector is damaged, replace the dashboard wire harness.

5. Turn the ignition switch to LOCK (0).

6. Disconnect the negative cable from the battery, then wait at least 3 minutes.

7. Disconnect SRS unit connector A (39P) from the SRS unit (see step 8 on page 24-33).

8. Check for bent or damaged terminals on the SRS unit.

   Are any terminals bend or damaged?

   YES—Replace the SRS unit (see page 24-221). ■

   NO—Replace the dashboard wire harness. ■

DTC Troubleshooting (cont'd)

DTC A4-1x ("x" can be 0 thru 9 or A thru F): SRS Connector B Not Properly Installed

NOTE:
- Before doing this troubleshooting procedure, review SRS Precautions and Procedures (see page 24-23), General Troubleshooting Information (see page 24-34), and Battery Terminal Disconnection and Reconnection (see page 22-89).
- 2-door: Before replacing the SRS unit, check the SRS unit software version with the HDS. If the software version is not the latest, update the SRS unit software (see page 24-37) and retest.

1. Clear the DTC memory (see page 24-35).

2. Turn the ignition switch to ON (II), then wait for 10 seconds.

3. Read the DTC (see page 24-35).

   Is DTC A4-1x indicated?

   YES—Go to step 4.

   NO—Intermittent failure, the system is OK at this time. Go to Troubleshooting Intermittent Failures (see page 24-36). If another DTC is indicated, troubleshoot the DTC.

4. Check the connection between SRS unit connector B (39P) and the SRS unit.

   Is the connection OK?

   YES—Go to step 5.

   NO—Properly reinstall the connector and retest. If the connector is damaged, replace the dashboard wire harness.

5. Turn the ignition switch to LOCK (0).

6. Disconnect the negative cable from the battery, then wait at least 3 minutes.

7. Disconnect SRS unit connector B (39P) from the SRS unit (see step 8 on page 24-33).

8. Check for bent or damaged terminals on the SRS unit.

   Are any terminals bend or damaged?

   YES—Replace the SRS unit (see page 24-221). ■

   NO—Replace the dashboard wire harness. ■

DTC 41-xx, 42-xx, 43-xx ("x" can be 0 thru 9 or A thru F): Internal Failure of the ODS Unit

NOTE: Only read DTCs from the SRS menu, not from SWS menus unless instructed to check SWS DTCs. SWS (ODS unit) DTCs are subcodes of SRS unit DTCs. Only troubleshoot the corresponding SRS DTCs.

Do the troubleshooting for SRS unit DTC 81-4x (see page 24-163).

DTC 71-xx ("x" can be 0 thru 9 or A thru F): ODS Unit Not Calibrated

NOTE: Only read DTCs from the SRS menu, not from SWS menus unless instructed to check SWS DTCs. SWS (ODS unit) DTCs are subcodes of SRS unit DTCs. Only troubleshoot the corresponding SRS DTCs.

Do the troubleshooting for SRS unit DTC 81-71 (see page 24-166).

HONDA

DTC Troubleshooting (cont'd)

DTC 14-11: Short to Power in the Front Passenger's Weight Sensor (front inner side) Power Circuit

DTC 14-12: Short to Ground in the Front Passenger's Weight Sensor (front inner side) Power Circuit

DTC 14-13: Open in the Front Passenger's Weight Sensor (front inner side) Output Circuit

DTC 14-14: Short to Ground in the Front Passenger's Weight Sensor (front inner side) Output Circuit

NOTE: Only read DTCs from the SRS menu, not from SWS menus unless instructed to check SWS DTCs. SWS (ODS unit) DTCs are subcodes of SRS unit DTCs. Only troubleshoot the corresponding SRS DTCs.

Do the troubleshooting for SRS unit DTC 82-14 (see page 24-169).

DTC 16-11: Short to Power in the Front Passenger's Weight Sensor (rear inner side) Power Circuit

DTC 16-12: Short to Ground in the Front Passenger's Weight Sensor (rear inner side) Power Circuit

DTC 16-13: Open in the Front Passenger's Weight Sensor (rear inner side) Output Circuit

DTC 16-14: Short to Ground in the Front Passenger's Weight Sensor (rear inner side) Output Circuit

NOTE: Only read DTCs from the SRS menu, not from SWS menus unless instructed to check SWS DTCs. SWS (ODS unit) DTCs are subcodes of SRS unit DTCs. Only troubleshoot the corresponding SRS DTCs.

Do the troubleshooting for SRS unit DTC 82-16 (see page 24-172).

DTC 24-11: Short to Power in the Front Passenger's Weight Sensor (front outer side) Power Circuit

DTC 24-12: Short to Ground in the Front Passenger's Weight Sensor (front outer side) Power Circuit

DTC 24-13: Open in the Front Passenger's Weight Sensor (front outer side) Output Circuit

DTC 24-14: Short to Ground in the Front Passenger's Weight Sensor (front outer side) Output Circuit

NOTE: Only read DTCs from the SRS menu, not from SWS menus unless instructed to check SWS DTCs. SWS (ODS unit) DTCs are subcodes of SRS unit DTCs. Only troubleshoot the corresponding SRS DTCs.

Do the troubleshooting for SRS unit DTC 83-24 (see page 24-176).

DTC 26-11: Short to Power in the Front Passenger's Weight Sensor (rear outer side) Power Circuit

DTC 26-12: Short to Ground in the Front Passenger's Weight Sensor (rear outer side) Power Circuit

DTC 26-13: Open in the Front Passenger's Weight Sensor (rear outer side) Output Circuit

DTC 26-14: Short to Ground in the Front Passenger's Weight Sensor (rear outer side) Output Circuit

NOTE: Only read DTCs from the SRS menu, not from SWS menus unless instructed to check SWS DTCs. SWS (ODS unit) DTCs are subcodes of SRS unit DTCs. Only troubleshoot the corresponding SRS DTCs.

Do the troubleshooting for SRS unit DTC 83-26 (see page 24-179).

DTC Troubleshooting (cont'd)

DTC 15-3x: No Signal from the Front Inner Side Front Passenger's Weight Sensor

DTC 17-3x: No Signal from the Rear Inner Side Front Passenger's Weight Sensor

DTC 25-3x: No Signal from the Front Outer Side Front Passenger's Weight Sensor

DTC 27-3x: No Signal from the Rear Outer Side Front Passenger's Weight Sensor

NOTE: Only read DTCs from the SRS menu, not from SWS menus unless instructed to check SWS DTCs. SWS (ODS unit) DTCs are subcodes of SRS unit DTCs. Only troubleshoot the corresponding SRS DTCs.

Do the troubleshooting for SRS unit DTC 82-15, 82-17, 83-25, and 83-27 (see page 24-183).

Symptom Troubleshooting

SRS indicator does not come on

NOTE: 2-door: Before replacing the SRS unit, check the SRS unit software version with the HDS. If the software version is not the latest, update the SRS unit software (see page 24-37) and retest.

1. Turn the ignition switch to LOCK (0), and wait for 10 seconds.

2. Turn the ignition switch to ON (II), and check that the SRS indicator comes on for about 6 seconds and then goes off.

   Does the SRS indicator come on?

   YES—Intermittent failure, the system is OK at this time.

   NO—Go to step 3.

3. Connect the HDS to the data link connector (DLC) (see page 24-35).

4. Make sure the HDS communicates with the vehicle and the SRS unit. If it does not communicate, troubleshoot the DLC circuit (see page 11-192).

5. Do the gauge control module self diagnostic function (see page 22-304).

   Does the SRS indicator come on?

   YES—Faulty SRS unit; replace the SRS unit (see page 24-221). ■

   NO—Faulty gauge control module; replace the gauge control module (see page 22-324). ■

SRS indicator stays on, but no DTCs are stored

NOTE: Before doing this troubleshooting procedure, make sure the battery is fully charged. If the battery voltage is low, SRS indicator may stay on.

1. Start the engine, and see if the malfunction indicator lamp (MIL) stays on.

   Does the MIL stay on?

   YES—Go to the MIL Circuit Troubleshooting (see page 11-191).

   NO—Go to step 2.

2. Connect the HDS to the data link connector (DLC) (see page 24-35).

3. Make sure the HDS communicates with the vehicle and the SRS unit. If it does not communicate, troubleshoot the DLC circuit (see page 11-192).

4. Read the DTC (see page 24-35).

   Are any SRS DTCs indicated?

   YES—Do the SRS DTC troubleshooting.

   NO—Go to step 5.

5. Select Body Electrical status with the HDS.

6. Check for DTCs in the Gauge Menu with the HDS.

   Is DTC U0151 indicated?

   YES—Go to the DTC U0151 troubleshooting (see page 22-318).

   NO—Go to step 7.

7. Do the gauge control module self diagnostic function (see page 22-304).

   Does the SRS indicator come on?

   YES—Faulty SRS unit; replace the SRS unit (see page 24-221). ■

   NO—Faulty gauge control module; replace the gauge control module (see page 22-324). ■

Symptom Troubleshooting (cont'd)

Side airbag cutoff indicator stays on

1. Make sure nothing is on the front passenger's seat.

2. Make sure the seat-back is dry.

3. Turn the ignition switch to ON (II), and see if the SRS indicator comes on.

   Does the SRS indicator come on and stay on?

   YES—Go to the Symptom Troubleshooting "SRS indicator stay on, but no DTCs are stored".

   NO—Go to step 4.

4. Connect the HDS to the data link connector (DLC) (see page 24-35).

5. Make sure the HDS communicates with the vehicle and the SRS unit. If it does not communicate, troubleshoot the DLC circuit (see page 11-192).

6. Select Body Electrical status with the HDS.

7. Check for DTCs in the Gauge Menu with the HDS.

   Is DTC U0151 indicated?

   YES—Go to the DTC U0151 troubleshooting (see page 22-318).

   NO—Go to step 8.

8. Do the gauge control module self-diagnostic function (see page 22-304).

   Does the side airbag cutoff indicator flash?

   YES—Initialize the ODS unit (see page 24-38). If problem is still present, replace the OPDS sensor/seat-back for 4-door (see page 20-199), for 2-door (see page 20-205). If the problem is still present, replace the SRS unit (see page 24-221). ■

   NO—Faulty gauge control module; replace the gauge control module (see page 22-324). ■

Side airbag cutoff indicator does not come on

NOTE:
- If the SRS indicator also stays on, go to SRS indicator stays on, but no DTCs are stored (see page 24-199).
- 2-door: Before replacing the SRS unit, check the SRS unit software version with the HDS. If the software version is not the latest, update the SRS unit software (see page 24-37) and retest.

1. Turn the ignition to LOCK (0), and wait for 10 seconds.

2. Turn the ignition switch to ON (II), and check that the side airbag cutoff indicator comes on for about 6 seconds.

   Does the side airbag cutoff indicator come on?

   YES—Intermittent failure, the system is OK at this time.

   NO—Go to step 3.

3. Connect the HDS to the data link connector (DLC) (see page 24-35).

4. Make sure the HDS communicates with the vehicle and the SRS unit. If it does not communicate, troubleshoot the DLC circuit (see page 11-192).

5. Do the gauge control module self diagnostic function (see page 22-304).

   Does the side airbag cutoff indicator come on?

   YES—Faulty SRS unit; replace the SRS unit (see page 24-221). ■

   NO—Faulty gauge control module; replace the gauge control module (see page 22-324). ■

Passenger's airbag cutoff indicator stays on or comes on suddenly

NOTE: Under the following conditions, the passenger's airbag cutoff indicator stays on or comes on suddenly.
- When one is sitting the front passenger's seat, but there is an object on the seat more than 5 kg (11 lbs).
- The seat belt is buckled, but no one is sitting on the front passenger's seat.
- Someone who is less than about 30 kg (65 lbs) is sitting on the front passenger's seat.
- 2-door: Before replacing the SRS unit, check the SRS unit software version with the HDS. If the software version is not the latest, update the SRS unit software (see page 24-37) and retest.

1. Check for these items, then recheck the passenger's airbag cutoff indicator.

   - The front passenger's seat is installed correctly.
   - Nothing is/was on the front passenger's seat.
   - Nothing is/was under the front passenger's seat.
   - Nothing is/was in the front passenger's seat-back pocket.
   - Whoever was sitting on the front passenger's seat was sitting in the proper sitting position.
   - Someone who is more than 30 kg (65 lbs) but is supporting some of their body weight on their legs, feet, arms, or hands, which may be resting on the floor or an arm rest. The seat weight sensors may not sense the correct weight of the passenger.

   Does the passenger's airbag cutoff indicator stay on?

   YES—Go to step 2.

   NO—Troubleshooting is complete. ■

2. Connect the HDS to the data link connector (DLC) (see page 24-35).

3. Turn the ignition switch to ON (II).

4. Make sure the HDS communicates with the vehicle and the SRS unit. If it does not communicate, troubleshoot the DLC circuit (see page 11-192).

5. Select the INSPECTION menu on the HDS, then select AFTER REPLACING FRONT PASSENGER'S SEAT COMPONENT(S), and follows the problems.

   Does the passenger's airbag cutoff indicator stay on?

   YES—Go to step 6.

   NO—Troubleshooting is complete. ■

6. Select the INSPECTION menu on the HDS, then select AFTER A VEHICLE COLLISION, and follow the prompts.

   Does the passenger's airbag cutoff indicator stay on?

   YES—Faulty SRS unit; replace the SRS unit (see page 24-221). If the problem is still present, replace the ODS unit (see page 24-230), and then if the problem is still present, replace the front passenger's weight sensors for 4-door (see page 24-228), for 2-door (see page 24-229). ■

   NO—Troubleshooting is complete. ■

Component Replacement/Inspection After Deployment

NOTE:
- Before doing any SRS repairs, check the DTCs (see page 24-34) for the less obvious deployed components (seat belt tensioners, front impact sensors, side airbag sensors, etc.)
- Do not replace the ODS unit unless it is physically damaged or a specific fault was found during DTC troubleshooting.
- After a vehicle collision, do the ODS unit operation check (see page 24-39).
- After a vehicle collision, inspect the front seat active head restraints (see page 20-180).

After a collision where the seat belt tensioners deployed, replace these items:
- SRS unit
- Seat belt tensioners
- Front impact sensors

After a collision where the front airbag(s) deployed, replace these items:
- SRS unit
- Deployed airbag(s)
- Seat belt tensioners
- Front impact sensors

After a collision where the side airbag(s) deployed, replace these items:
- SRS unit
- Side impact sensor(s) (first)
- Side impact sensor(s) (second)
- B-pillar lower trim
- Front seat assembly (Impact side)

After a collision where a side curtain airbag has deployed, replace the items for the side(s) that deployed:
- SRS unit
- Deployed side curtain airbag(s)
- Seat belt tensioner(s)
- Side impact sensor(s) (first)
- Side impact sensor(s) (second)
- Rear safing sensor
- Roof trim
- A-pillar trim
- B-pillar upper trim
- C-pillar trim
- Front grab handle
- Rear grab handle
- All related trim clips
- Sunvisor

After a moderate to severe side or rear collision, inspect for any damage on the side curtain airbag or other related components. Replace the components as needed.

4-Door
A-Pillar Trim

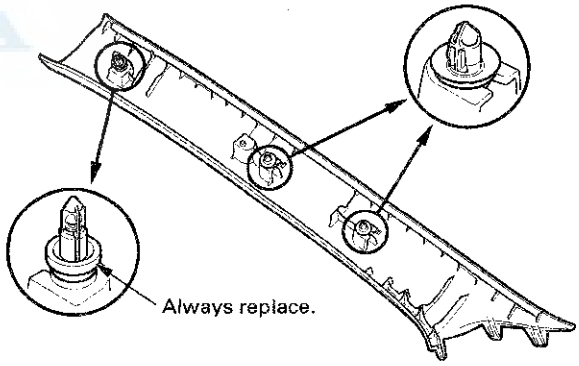

2-Door model is same as shown.

B-Pillar Trim

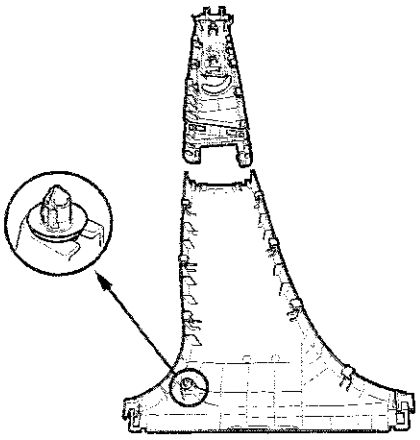

C-Pillar Trim

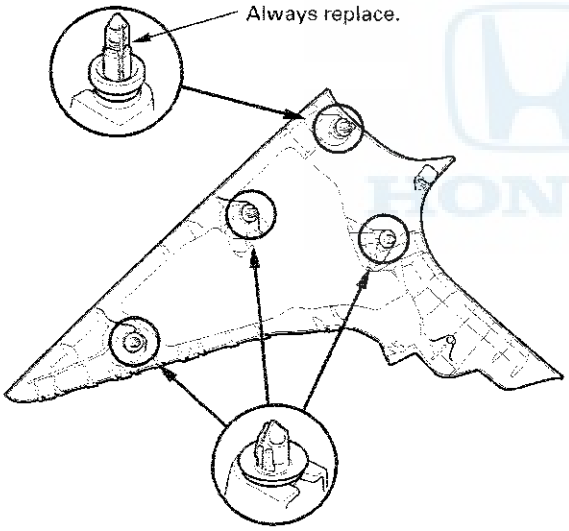

2-Door
B-Pillar Trim

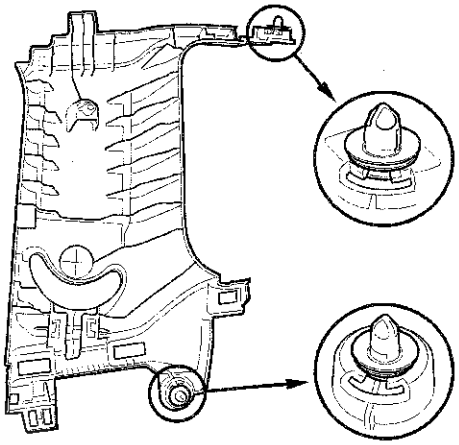

C-Pillar Trim

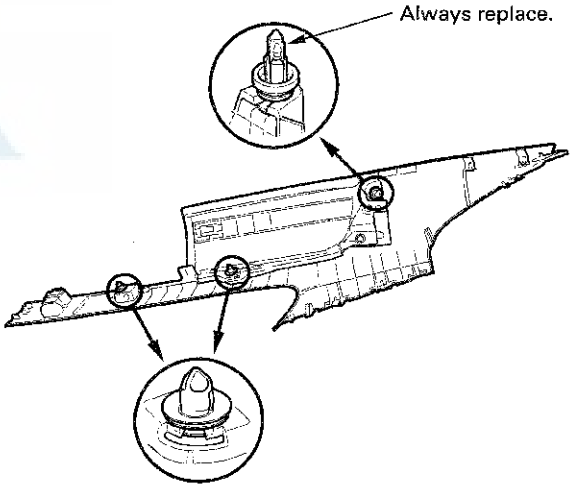

During the repair process, inspect these areas:
- Inspect all the SRS wire harnesses. Replace, do not repair, any damaged harnesses.
- Inspect the cable reel for heat damage. If there is any damage, replace the cable reel.

After the vehicle is completely repaired, turn the ignition switch to ON (II). If the SRS indicator comes on for about 6 seconds and then goes off, the SRS is OK. If the indicator does not function properly, use the HDS to read the DTC (see page 24-35). If you cannot retrieve a code, do the SRS Symptom Troubleshooting.

(cont'd)

Component Replacement/Inspection After Deployment (cont'd)

Checking and Adjusting the Headliner/Pillar Trim Overlap

To prevent the side curtain airbag from deploying and damaging the pillar trim, the overlap between the headliner and pillar trim must be less then 8 mm (0.3 in.). To check the overlap, do this:

1. Install the headliner (A) and the pillar trim (B).

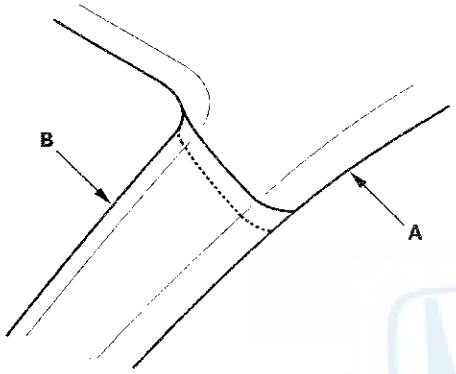

This illustration shows the A-pillar.

2. Apply masking tape to the headliner to mark the upper edge of each pillar trim.

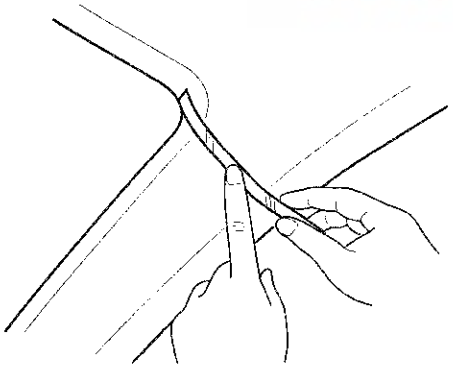

This illustration shows the A-pillar.

3. Remove the pillar trim, and measure the headliner overlap.

   - If the overlap is less than 8 mm (0.3 in.), remove the tape, and install the pillar trim.
   - If the overlap is more than 8 mm (0.3 in.), go to step 4.

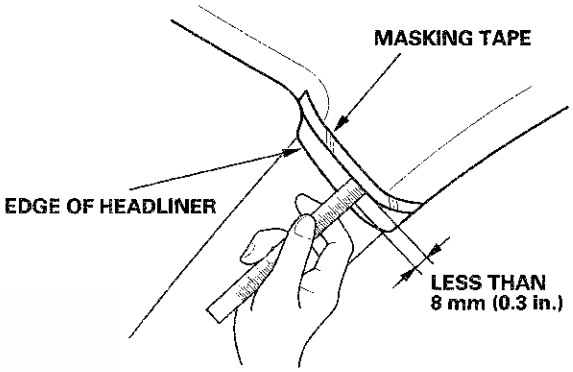

This illustration shows the A-pillar.

4. Carefully trim the headliner with a utility knife, reducing the overlap to less than 8 mm (0.3 in.).

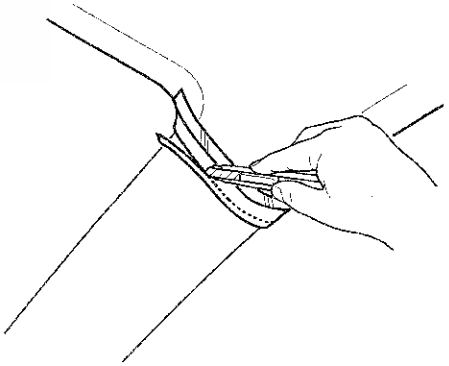

This illustration shows the A-pillar.

5. Remove the tape, and install the pillar trim.

Driver's Airbag Replacement

Removal

1. Do the battery terminal disconnection procedure (see page 22-89), then wait at least 3 minutes before starting work.

2. Remove the access panel (A) from the steering wheel, then disconnect the driver's airbag 4P connector (B) from the cable reel.

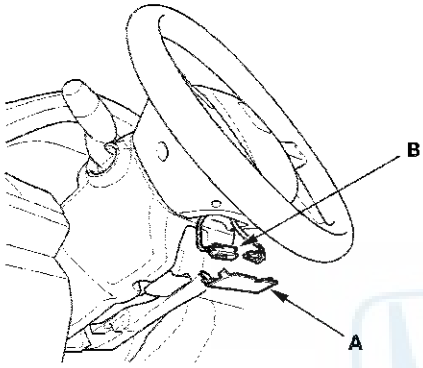

3. Using a TORX T30 bit, remove the two TORX bolts (A).

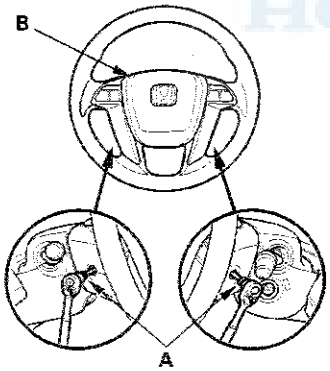

4. Remove the driver's airbag (B).

Installation

1. Place the driver's airbag (A) in the steering wheel, and secure it with new TORX bolts (B).

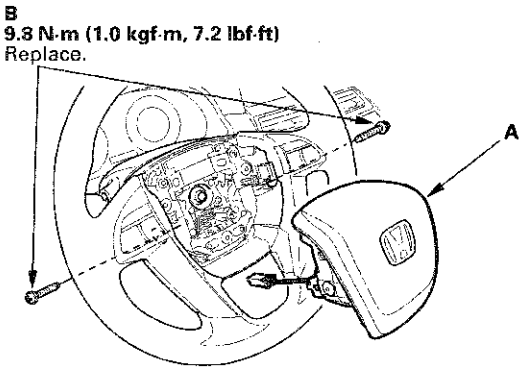

2. Connect the driver's airbag 4P connector (A) to the cable reel 4P connector, then install the access panel (B) on the steering wheel.

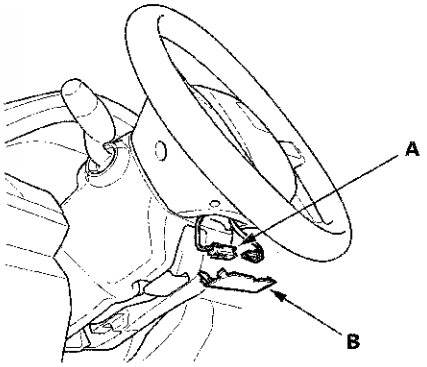

3. Do the battery terminal reconnection procedure (see page 22-89).

4. Connect the HDS, and clear the DTCs (see page 24-35).

5. After installing the airbag, confirm proper system operation:

   - Turn the ignition switch to ON (II); the SRS indicator should come on for about 6 seconds and then go off.
   - Make sure the horn and turn signal switches work properly.
   - Make sure the steering wheel switches work properly.

Front Passenger's Airbag Replacement

Removal

1. Do the battery terminal disconnection procedure (see page 22-89), then wait at least 3 minutes before starting work.

2. Disconnect the glove box damper and release the glove box stop on each side from the dashboard by pushing them inside (see page 20-161).

3. Detach the connector clip (A), then disconnect the dashboard wire harness 4P connector (B) from front passenger's airbag connector. Remove the nuts (C).

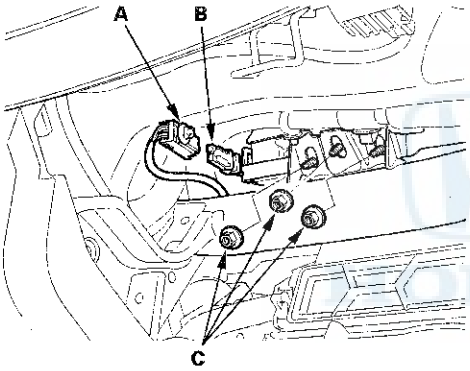

4. Remove the dashboard side lid (see step 6 on page 20-162).

5. Place the cardboard (A) between the center display visor and the passenger's airbag. Using only your hands, first lift the right side, then lift the left side, and remove the front passenger's airbag (B) from the dashboard.

   NOTE: The airbag lid has pawls (C) on each side where it attaches to the dashboard.

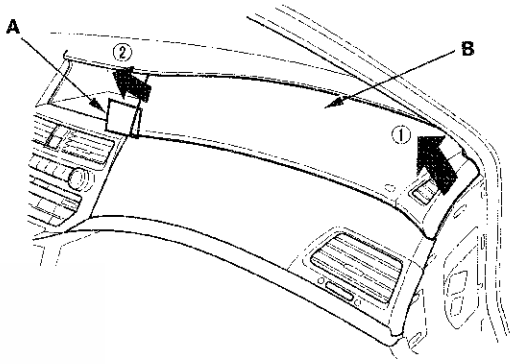

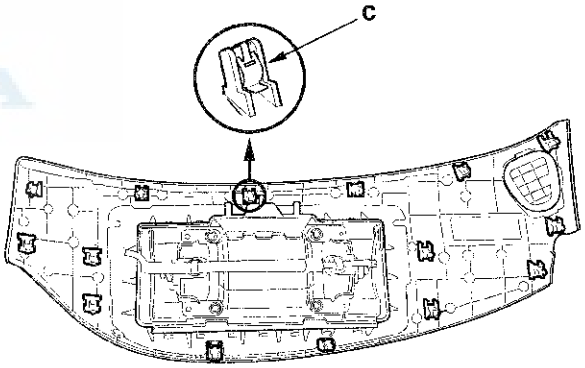

6. Cut the four parts of the lid as shown (A), and detach the front passenger's airbag.

   NOTE:
   - Always replace the upper dashboard panel whenever you remove the airbag from the panel.
   - Replace the airbag if the airbag mounting hooks or its housing is damaged.

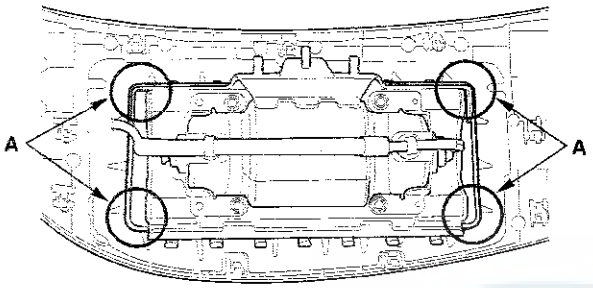

7. Insert the hooks (A) of the front passenger's airbag housing into the new upper dashboard panel, then insert the other hooks (B) into the panel.

   NOTE:
   - Make sure there are no objects between the airbag and the upper panel.
   - Make sure the airbag is fully seated, and make sure the upper panel is not deformed or damaged after the airbag is in place.
   - Do not use tools when detaching the front passenger's airbag in order to protect it.

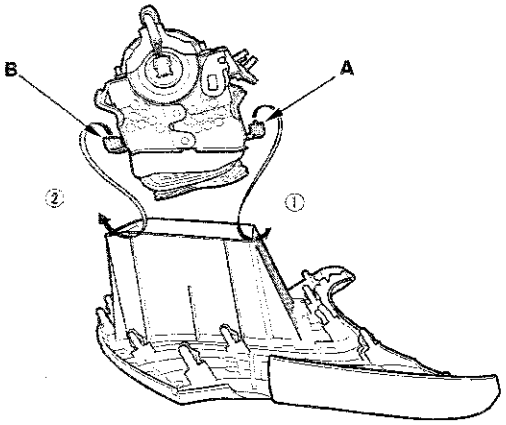

Installation

1. Place the front passenger's airbag and lid assembly (A) into the dashboard. Torque the front passenger's airbag mounting nuts (B).

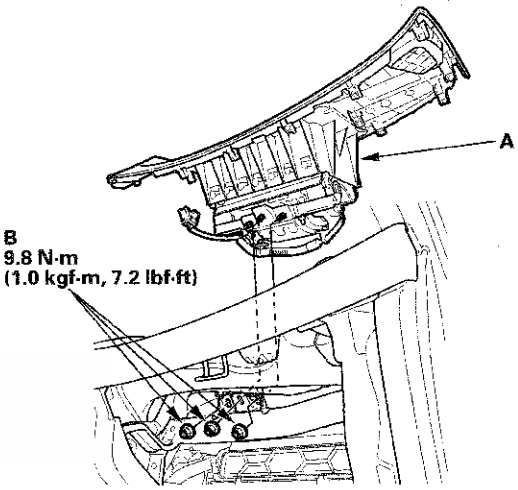

2. Connect the dashboard wire harness 4P connector (A) to the front passenger's airbag connector, then install the connector clip (B). Reinstall the glove box (see page 20-161).

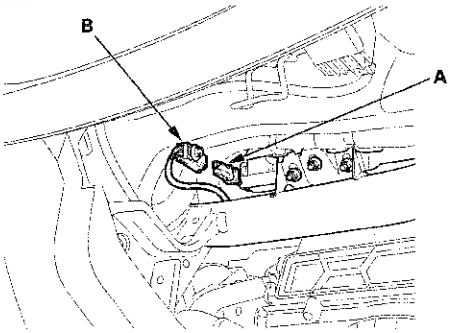

3. Reinstall the dashboard side lid.

4. Do the battery terminal reconnection procedure (see page 22-89).

5. Connect the HDS, and clear the DTCs (see page 24-35).

6. After installing the airbag, confirm proper system operation: Turn the ignition switch to ON (II); the SRS indicator should come on for about 6 seconds and then go off.

Side Airbag Replacement

Removal

1. Do the battery terminal disconnection procedure (see page 22-89), then wait at least 3 minutes before starting work.

2. Remove the seat assembly (see page 20-181).

3. Remove the seat-back cover:

   - 4-door (see page 20-205)
   - 2-door (see page 20-199)

4. Remove the mounting nuts (A) and the side airbag (B).

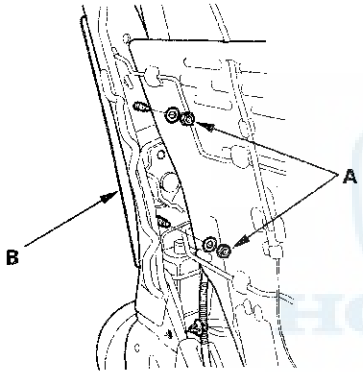

Installation

NOTE:
- If the side airbag lid is secured with tape, remove the tape.
- Do not open the lid on the side airbag cover.
- Use new mounting nuts tightened to the specified torque.
- Make sure that the seat-back cover is installed properly. Improper installation may prevent proper deployment.
- Be sure to install the harness wires so that they are not pinched or interfering with other parts.

1. Place the side airbag on the seat-back frame (A). Torque the new side airbag mounting nuts (B).

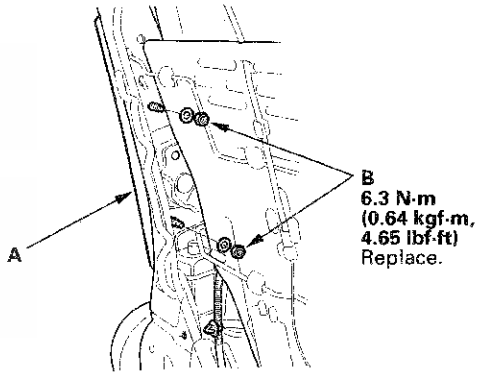

2. Install the seat-back cover in the reverse order of removal:

   - 4-door (see page 20-205)
   - 2-door (see page 20-199)

3. Install the seat assembly (see page 20-181), then connect the SRS floor wire harness 2P connector.

4. Move the front seat and the seat-back through their full ranges of movement, making sure the harness wires are not pinched or interfering with other parts.

5. Do the battery terminal reconnection procedure (see page 22-89).

6. Connect the HDS, and clear the DTCs (see page 24-35).

7. After installing the side airbag, confirm proper system operation: Turn the ignition switch to ON (II); the SRS indicator should come on for about 6 seconds and then go off.

Side Curtain Airbag Replacement

Removal

NOTE:
- Review the interior trim replacement procedure before doing repair or service (see page 20-95).
- Removal of the side curtain airbag must be done according to Precaution and Procedures (see page 24-23).
- The side curtain airbag system consists of many components. When the side curtain airbag has been deployed, go to Component Replacement/Inspection After Deployment, and replace all of the parts listed (see page 24-202).

1. Do the battery terminal disconnection procedure (see page 22-89), then wait at least 3 minutes before starting work.

2. Remove the headliner (see page 20-131).

3. Disconnect the SRS floor wire harness 2P connector (A) from the side curtain airbag.

4-Door

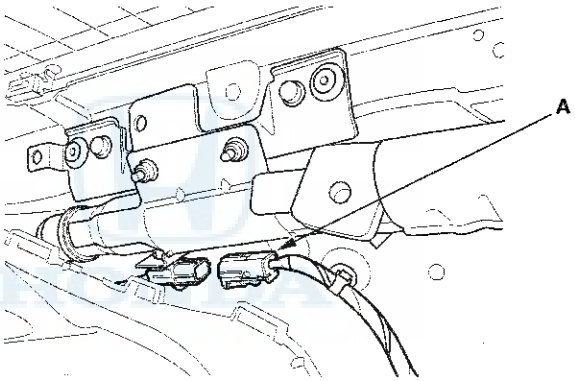

Left side shown; right side is similar.

2-Door

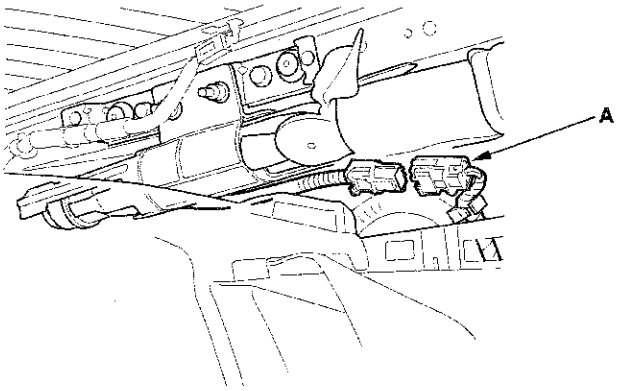

Left side shown; right side is similar.

(cont'd)

Side Curtain Airbag Replacement (cont'd)

4. Remove the mountng bolts (A) and the mounting bolts (B) from the bracket. Detach the clips (C), then remove the side curtain airbag (D).

4-Door

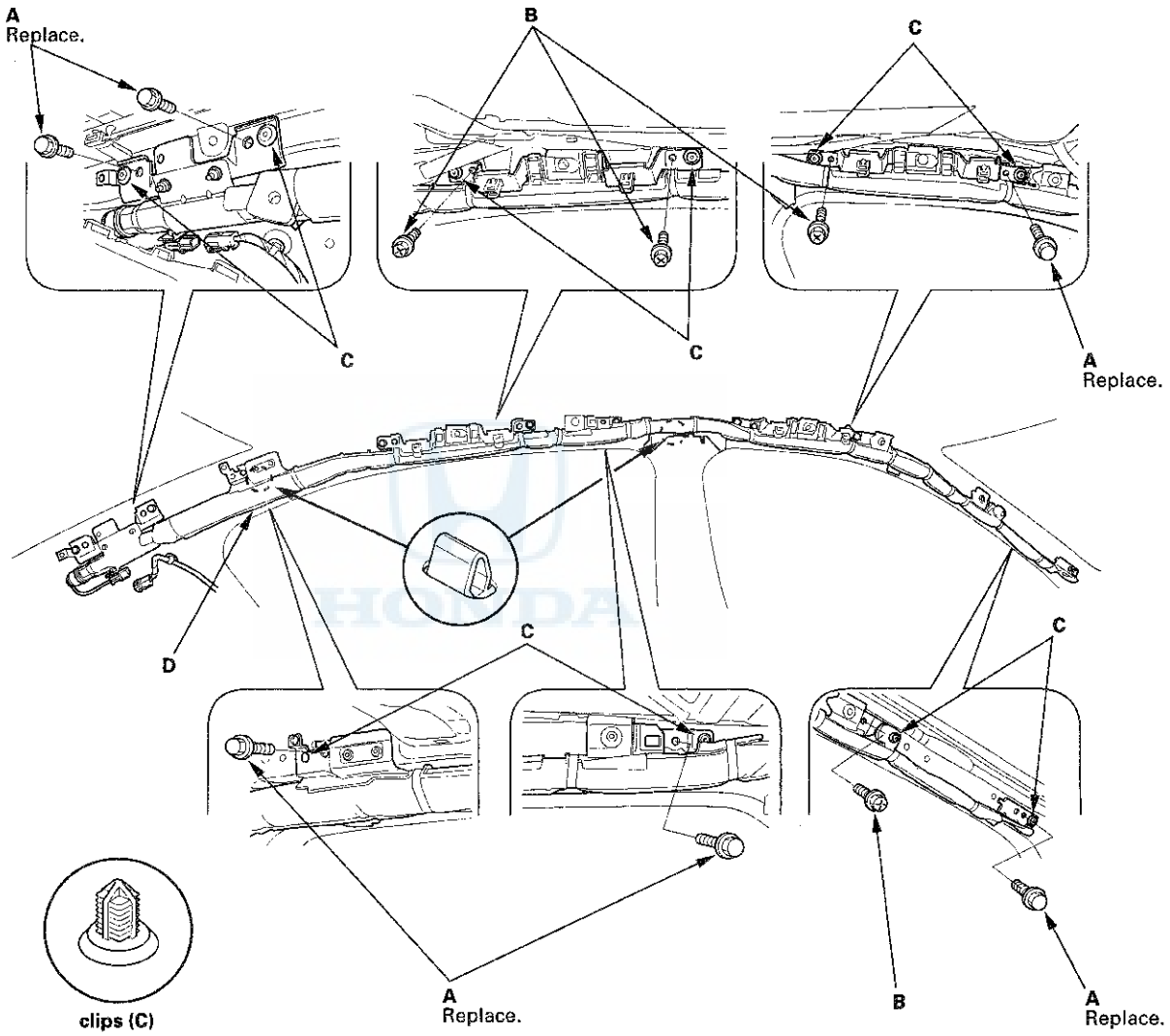

Left side shown; right side is similar.

2-Door

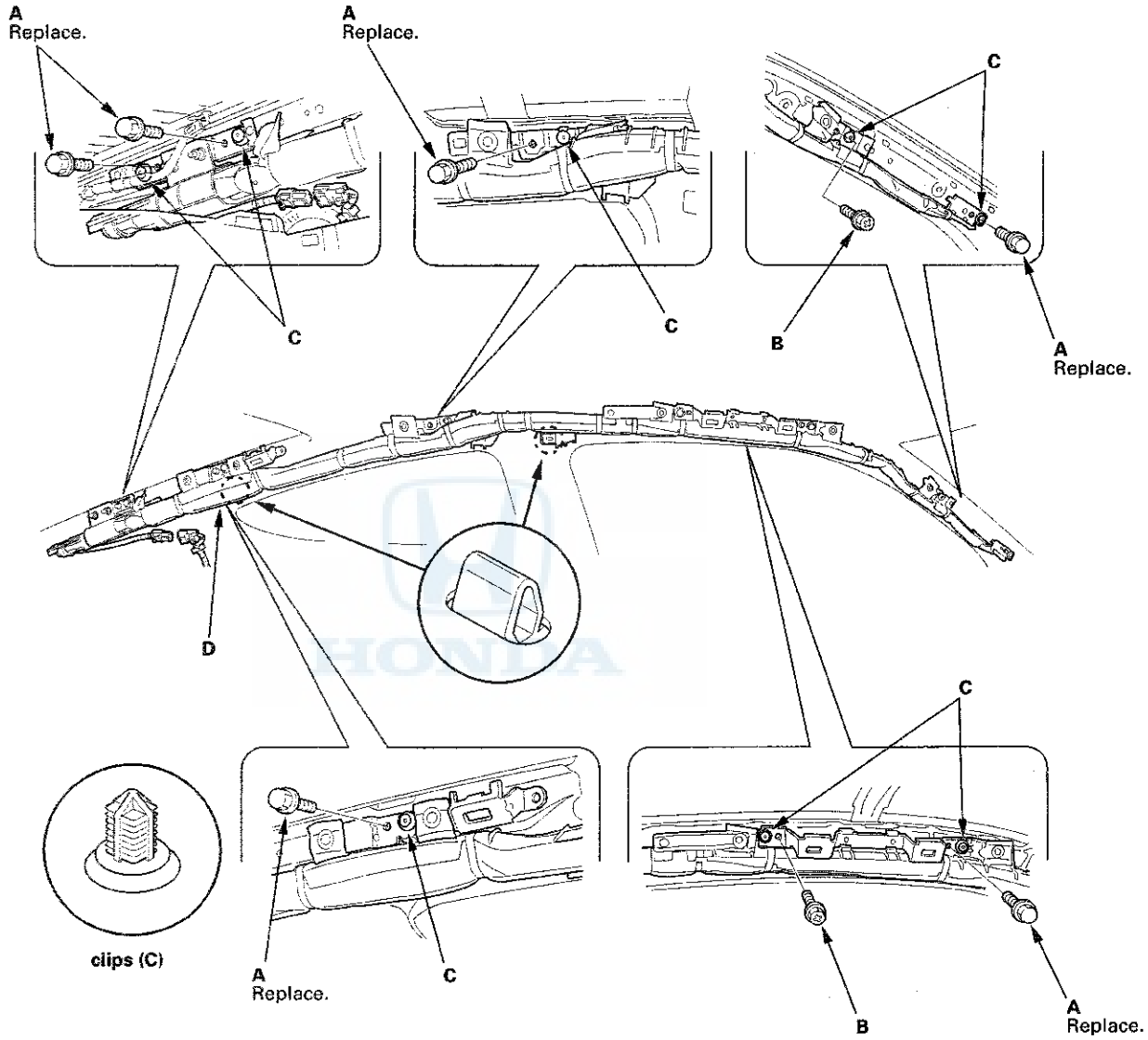

Left side shown; right side is similar.

(cont'd)

Side Curtain Airbag Replacement (cont'd)

Installation

NOTE:
- Installation of the side curtain airbag must be done according to precautions and procedures (see page 24-23).
- If the airbag is frayed, or has any other visible damage, replace it. Do not attempt to repair an airbag.
- When you install the airbag, make sure it is not twisted, and that it is not caught between the inflator bracket by the bracket bolts.
- Make sure that the side curtain airbag inflator retainer is installed properly. Otherwise the airbag could incorrectly deploy and cause damage or injuries.
- If there is any damage to the side curtain airbag, do not try to repair it. Replace any damaged side curtain airbag.

1. Place the side curtain airbag assembly on the side of the roof. Tighten the side curtain airbag mounting bolts (A) and mounting bolts (B) and the clip is pushed until stopping.

4-Door

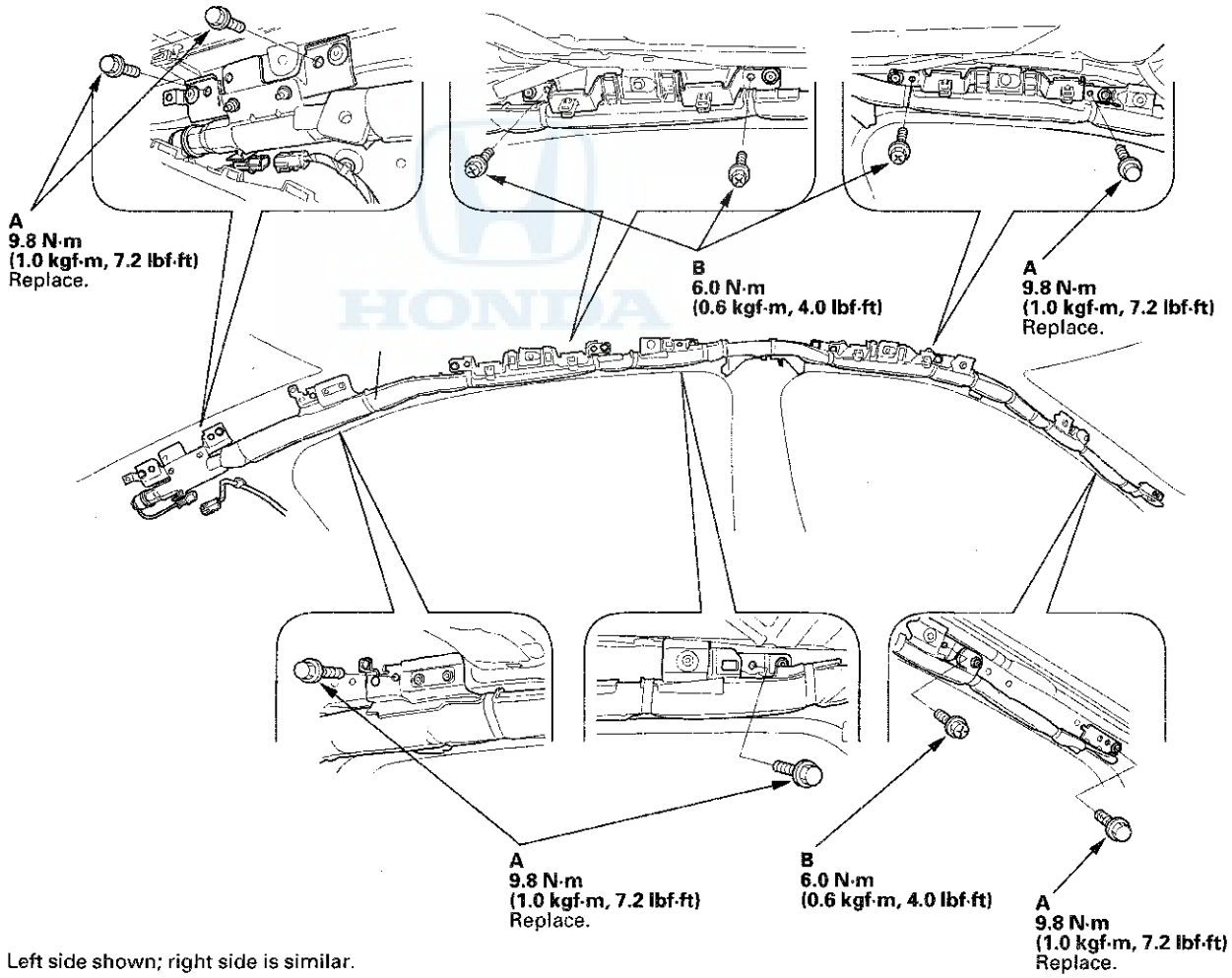

Left side shown; right side is similar.

2-Door

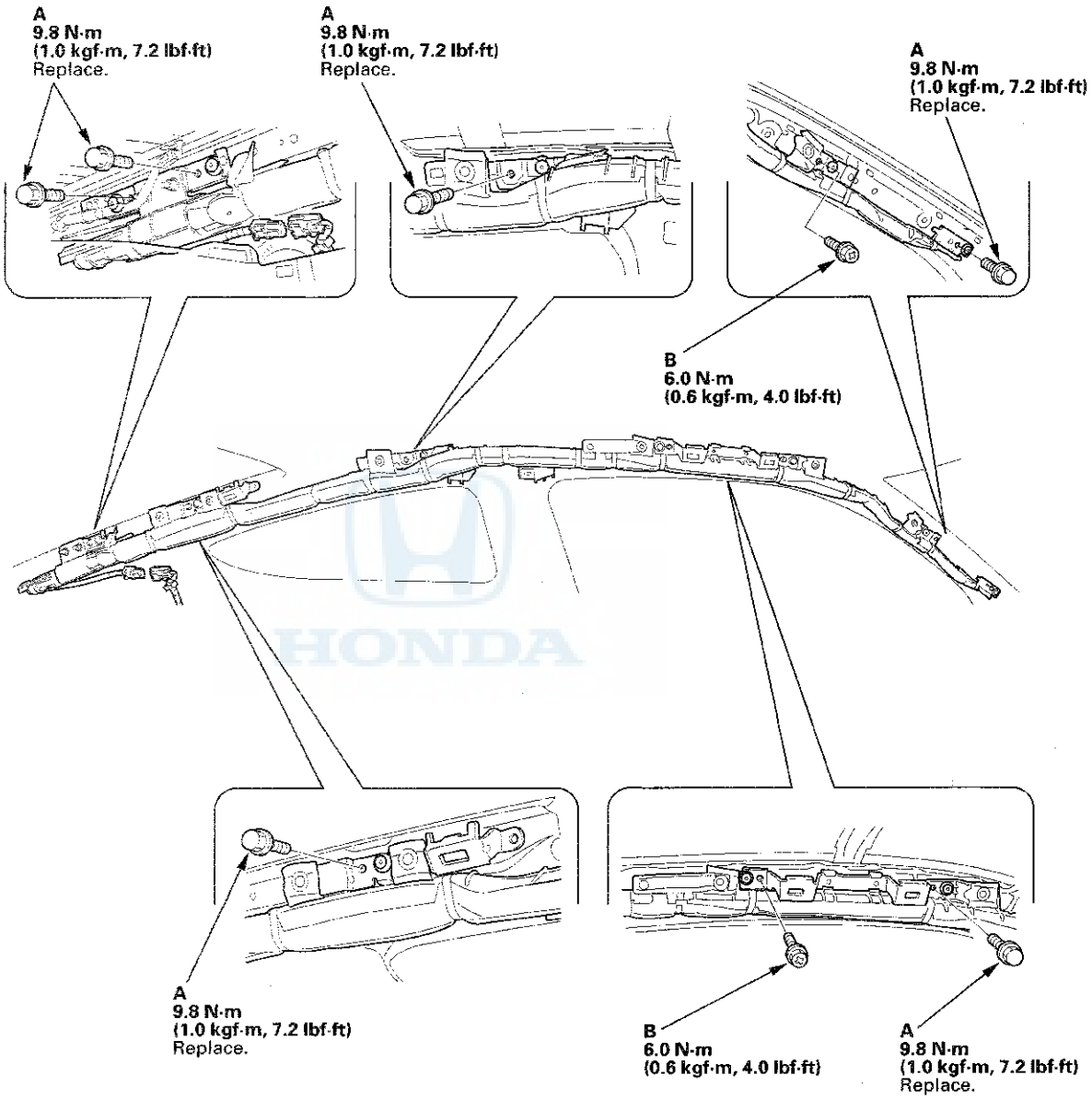

Left side shown; right side is similar.

(cont'd)

Side Curtain Airbag Replacement (cont'd)

2. Connect the SRS floor wire harness 2P connector (A) to the side curtain airbag.

4-Door

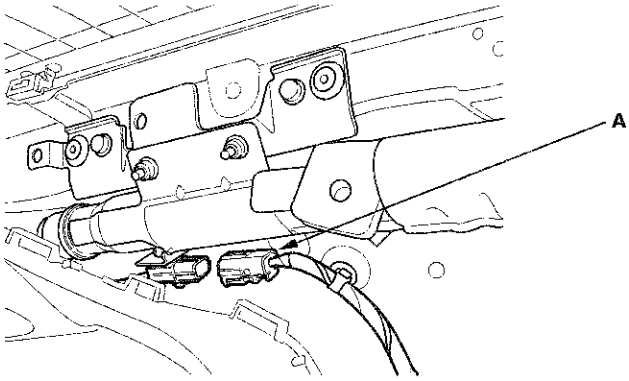

Left side shown; right side is similar.

2-Door

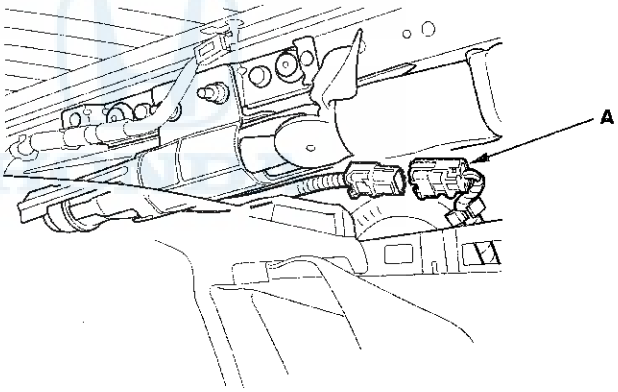

Left side shown; right side is similar.

3. Do the battery terminal reconnection procedure (see page 22-89).

4. Connect the HDS, and clear the DTCs (see page 24-35).

5. After installing the side curtain airbag, confirm proper system operation: Turn the ignition switch to ON (II); the SRS indicator should come on for about 6 seconds and then go off.

6. Install all removed parts.

7. Confirm proper headliner/pillar trim overlap (see page 24-204).

Airbag and Tensioner Disposal

Special Tools Required
Deployment tool 07HAZ-SG00500

Before scrapping any airbags, side airbags, side curtain airbags, seat belt tensioners, (including those in a whole vehicle to be scrapped), the part(s) must be deployed. If the vehicle is still within the warranty period, the Honda District Parts and Service Manager must give approval and/or special instruction before deploying the part(s). Only after the part(s) have been deployed (as the result of vehicle collision, for example), can they be scrapped.
If the parts appear intact (not deployed), treat them with extreme caution. Follow this procedure.

Deploying Airbags in the Vehicle

If an SRS equipped vehicle is to be entirely scrapped, its airbags, side airbags, side curtain airbags, and seat belt tensioners should be deployed while still in the vehicle. These parts should not be considered as salvageable parts and should never be installed in another vehicle.

1. Turn the ignition switch to LOCK (0), then disconnect the negative cable from the battery, then wait at least 3 minutes before staring work.

2. Confirm that each airbag, side airbag, side curtain airbag, or seat belt tensioner is securely mounted.

3. Confirm that the deployment tool is functioning properly by following the check procedure on the tool label.

Driver's Airbag

4. Remove the access panel (A) from the steering wheel then disconnect the driver's airbag 4P connector (B) from the cable reel.

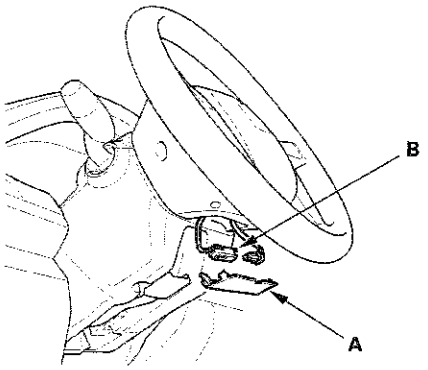

Front Passenger's Airbag

5. Disconnect the glove box damper and release the glove box stop on each side from the dashboard by pushing them inside (see page 20-161), then disconnect the dashboard wire harness 4P connector (A) from the front passenger's airbag connector.

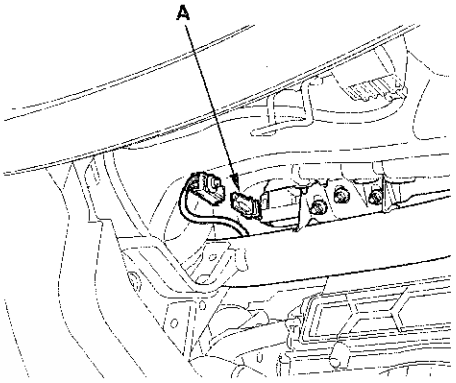

Side Airbag

6. Disconnect the side airbag 2P connector (A) from the SRS floor wire harness.

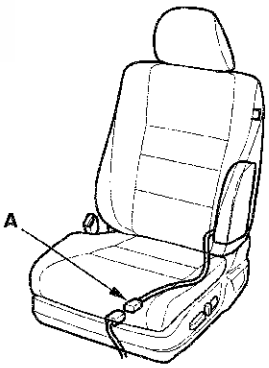

(cont'd)

Airbag and Tensioner Disposal (cont'd)

Side Curtain Airbag

7. Disconnect the SRS floor wire harness 2P connector (A) from the side curtain airbag.

4-Door

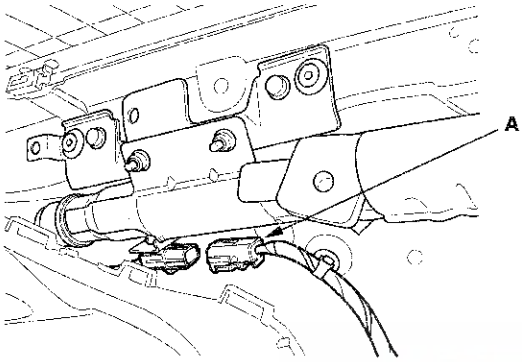

2-Door

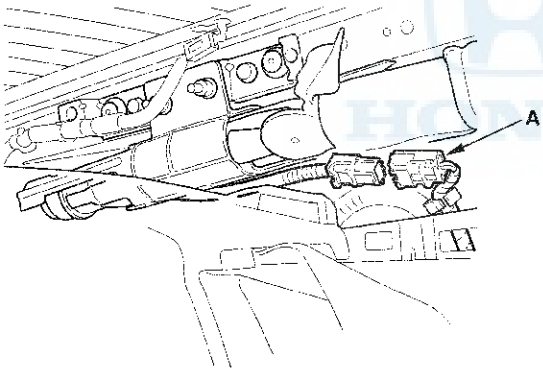

Seat Belt Tensioner

8. Disconnect the SRS floor wire harness 4P connector (A) from the seat belt tensioner. Pull the seat belt out all the way and cut it.

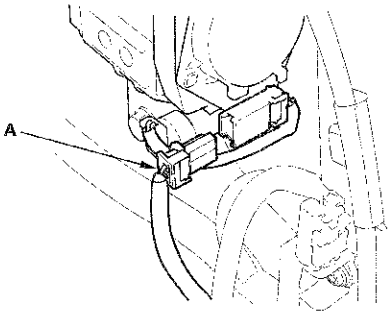

9. Cut off each connector, and strip the ends of the wires. Twist each pair of unlike colored wires together, and clip an alligator clip (A) from the deployment tool to each pair.

NOTE:
- Place the deployment tool at least 30 ft (10 m) away from the vehicle.
- The driver's and front passenger's airbags have dual inflators. Twist each pair of unlike colored wires together, and clip an alligator clip to each pair.

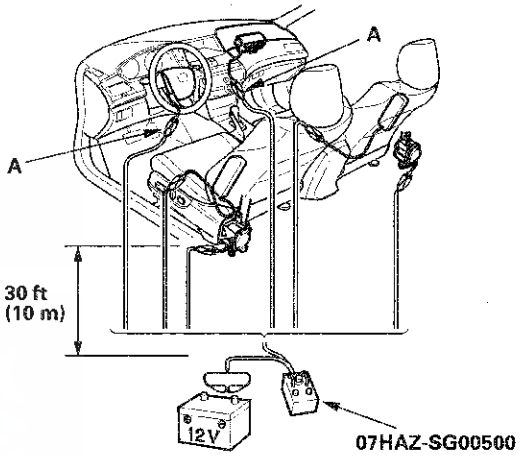

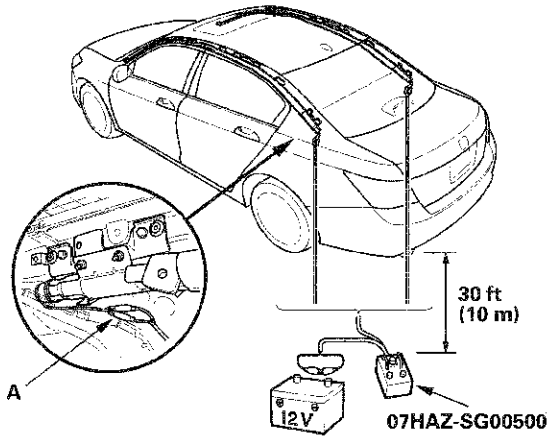

10. Connect a 12 V to the tool.

    - If the green light on the tool comes on, the igniter circuit is defective and cannot deploy the component. Go to Disposal of Damaged Components.
    - If the red light on the tool comes on, the component is ready to be deployed.

11. Push the tool's deployment switch. The airbags and tensioners should deploy (deployment is both highly audible and visible: A loud noise and rapid inflation of the bag, followed by slow deflation).

    - If the components deploy and the green light on the tool comes on, continue with this procedure.
    - If a component does not deploy, and the green light comes ON, its igniter is defective. Go to Disposal of Damaged Components.
    - During deployment, the airbags can become hot enough to burn you. Wait for 30 minutes after deployment before touching the airbags.

12. Dispose of the complete airbag. No part of it can be reused. Place it in a sturdy plastic bag (A), and seal it securely. Dispose of the deployed airbag according to your local regulations.

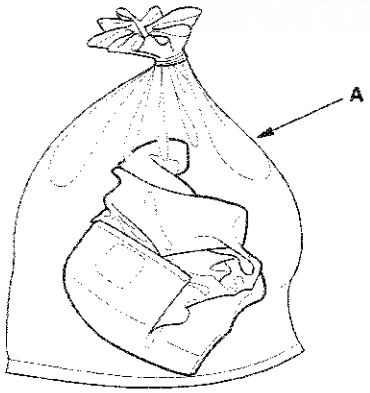

Deploying Components Out of the Vehicle

If an intact airbag or tensioner has been removed from a scrapped vehicle, or has been found defective or damaged during transit, storage, or service, it should be deployed as follows:

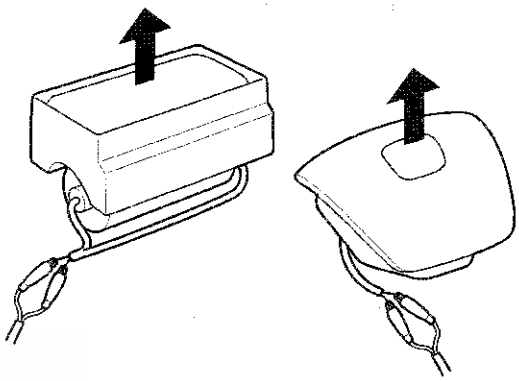

1. Confirm that the deployment tool is functioning properly by following the check procedure Deploying Airbags in the Vehicle on the tool label.

2. Position the airbag face up, outdoors, on flat ground, at least 30 ft (10 m) from any obstacles or people.

3. Follow steps 9 through 12 of the in-vehicle deployment procedure.

   NOTE: The driver's and front passenger's airbags have dual inflators. Twist each pair of unlike colored wires together, and clip an alligator clip to each pair.

(cont'd)

Airbag and Tensioner Disposal (cont'd)

Disposal of Damaged Components

1. If installed in a vehicle, follow the removal procedure for the driver's airbag (see page 24-205), front passenger's airbag (see page 24-206), side airbag (see page 24-208), side curtain airbag (see page 24-209), and seat belt tensioner (see page 24-5).

2. In all cases, make a short circuit by cutting, stripping, and twisting together the two inflator wires.

   NOTE: The driver's and front passenger's airbags have dual inflators. The like color wires go to the individual inflators. Twist the like colored wires together.

3. Package the component in exactly the same packaging that the new replacement part came in.

4. Mark the outside of the box DAMAGED AIRBAG NOT DEPLOYED, DAMAGED SIDE AIRBAG NOT DEPLOYED, DAMAGED SIDE CURTAIN AIRBAG NOT DEPLOYED, or DAMAGED SEAT BELT TENSIONER NOT DEPLOYED so it does not get confused with your parts stock.

5. Contact your Honda District Parts and Service Manager for instructions on how and where to return it for disposal.

Deployment Tool Check

1. Connect the yellow clips to both switch protector handles on the tool.

2. Then connect the red lead to the positive battery post and the black lead to the negative battery post.

3. Push the operation switch: The green light should come on, indicating that the tool is operating properly and is ready for use. If the red light stays on, the tool is faulty, and another one must be used for the procedure.

4. Disconnect the tool clips and connectors from the protector handles and the battery.

Cable Reel Replacement

Removal

1. Make sure the front wheels are aligned straight ahead.

2. Do the battery terminal disconnection procedure (see page 22-89), then wait at least 3 minutes, then wait for 3 minutes.

3. Remove the driver's airbag (see page 24-205).

4. Disconnect the connector (A) from the cable reel, then remove the steering wheel bolt (B).

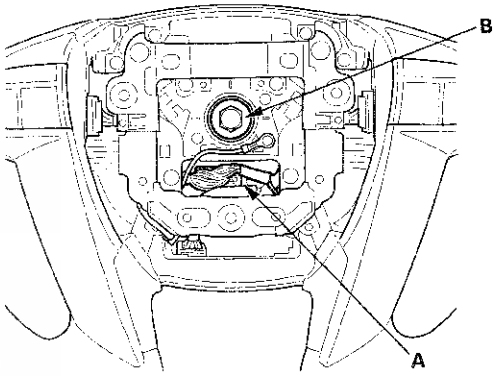

5. Confirm that the front wheels point straight ahead, then remove the steering wheel with a steering wheel puller (see page 17-24).
   Do not tap on the steering wheel or steering column shaft when removing the steering wheel.

6. Remove the column cover (see page 20-168).

7. Disconnect the dashboard wire harness 4P connector (A) from the cable reel 4P connector (B), then disconnect the dashboard wire harness 20P connector (C) from the cable reel (D).

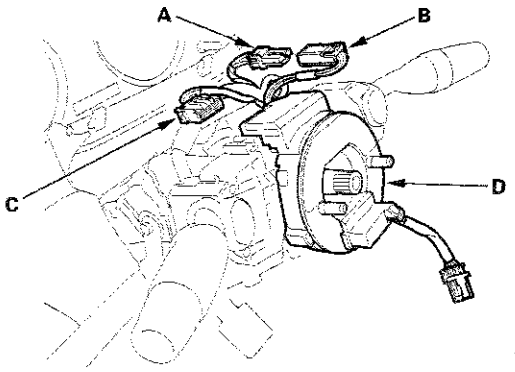

8. Release the lock tab (A) under the cable reel connector with a 90 ° hook shaped tool (B). Slide the tool below the cable reel connector just above the lock tab. Release the lower lock tab (C), and slide the cable reel off the column.

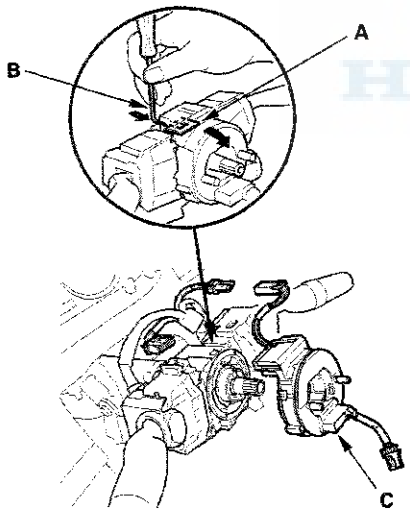

Installation

1. Before installing the steering wheel, align the front wheels straight ahead.

2. If not already done, disconnect the negative cable from the battery, then wait at least 3 minutes.

3. Set the turn signal canceling sleeve (A) so that the projections (B) are aligned vertically.

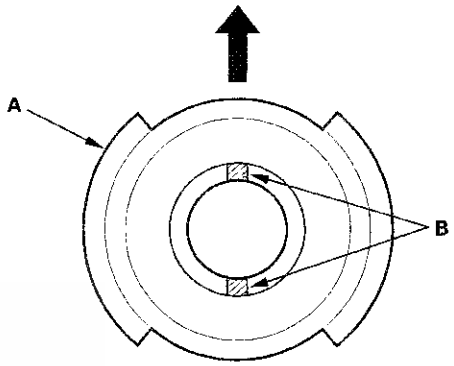

4. Carefully install the cable reel (A) on the steering column shaft. Then connect 20P connector (B) to the cable reel, and connect the 4P connector (C) to the dashboard wire harness 4P connector (D).

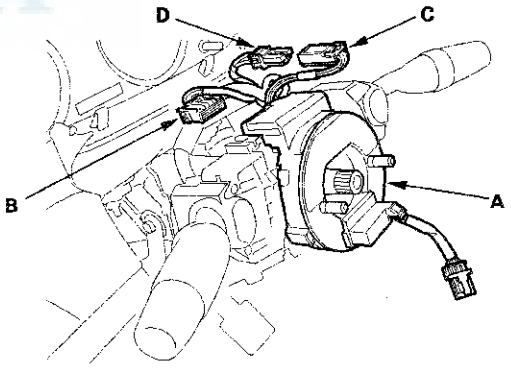

(cont'd)

Cable Reel Replacement (cont'd)

5. Install the steering column covers (see page 20-168).

6. If necessary, center the cable reel (New replacement cable reels come centered.). Do this by first rotating the cable reel clockwise until it stops. Then rotate it counterclockwise (about three turns) until the arrow mark (A) on the cable reel label points straight up.

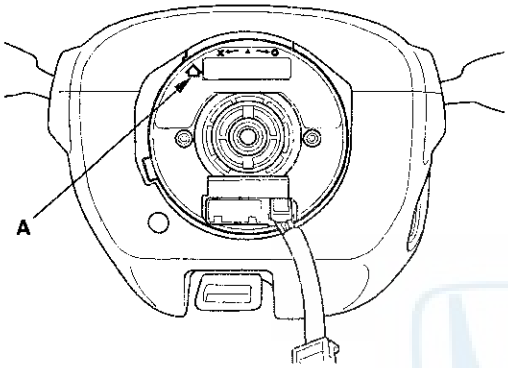

7. Position the two tabs (A) of the turn signal canceling sleeve (B) as shown, and install the steering wheel on to the steering column shaft, making sure the steering wheel hub (C) engages the pins (D) of the cable reel and tabs of the turn signal canceling sleeve. Do not tap on the steering wheel or steering column shaft when installing the steering wheel.

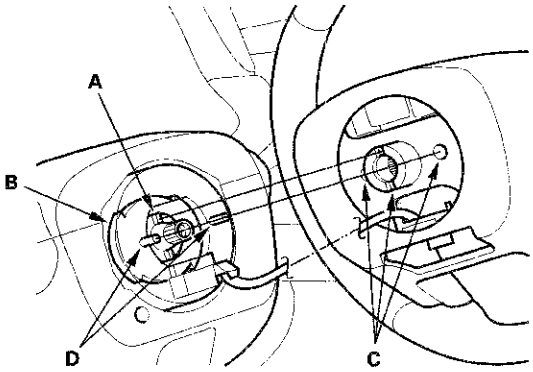

8. Install and torque a new steering wheel bolt (A), then reconnect the connectors.

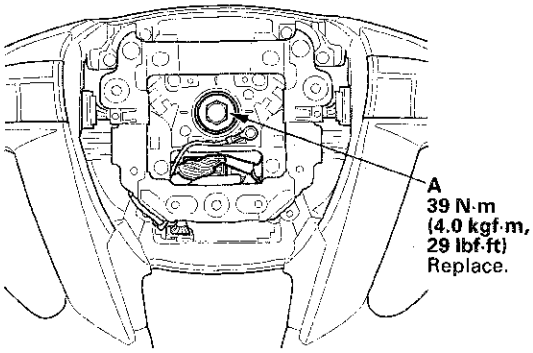

9. Install the driver's airbag (see page 24-205).

10. Do the battery terminal reconnection procedure (see page 22-89).

11. Connect the HDS, and clear any DTCs (see page 24-35).

12. After installing the cable reel, confirm proper system operation:

    - Turn the ignition switch to ON (II); the SRS indicator should come on for about 6 seconds and then go off.
    - After the SRS indicator has turned off, turn the steering wheel fully left and right to confirm the SRS indicator does not come on.
    - Make sure the horn and turn signal switches work properly.
    - Make sure the steering wheel switches work properly.

SRS Unit Replacement

Removal

1. Do the battery terminal disconnection procedure (see page 22-89), then wait at least 3 minutes before starting work.

2. Remove the driver's dashboard center lower cover and passenger's dashboard center lower cover (see page 20-157).

3. Using a TORX T30 bit, remove the TORX bolt (A).

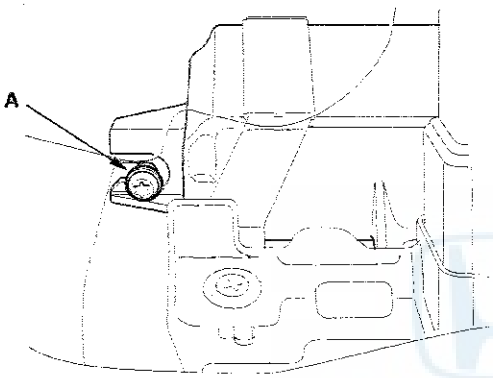

4. With navigation: Remove the audio disc changer (see page 23-113).

5. Without navigation: Remove the center pocket (see page 20-155).

6. Disconnect SRS unit connector A (39P) and SRS unit connector B (39P), and remove the TORX bolts (C) using a TORX T30 bit, then pull out the SRS unit.

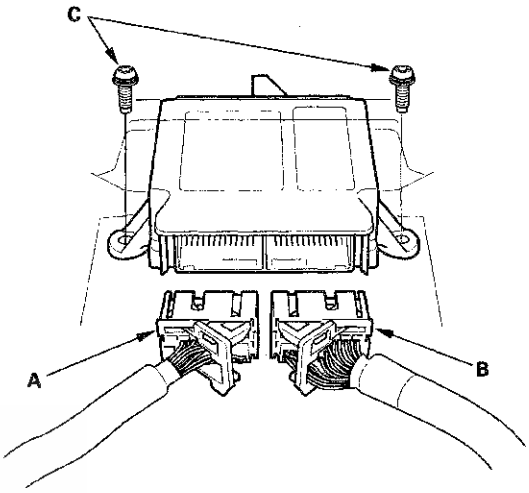

(cont'd)

SRS Unit Replacement (cont'd)

Installation

1. Install the SRS unit (A) with a new TORX bolt (B), using a TORX T30 bit.

   NOTE: Be sure the SRS unit is sitting squarely against it's bracket before torquing the TORX bolt.

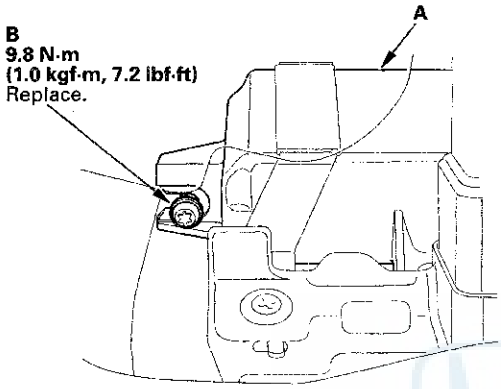

2. Using a TORX T30 bit, install the new TORX bolts (A), then connect the connectors (B) to the SRS unit; push them into position until they click (see page 24-28).

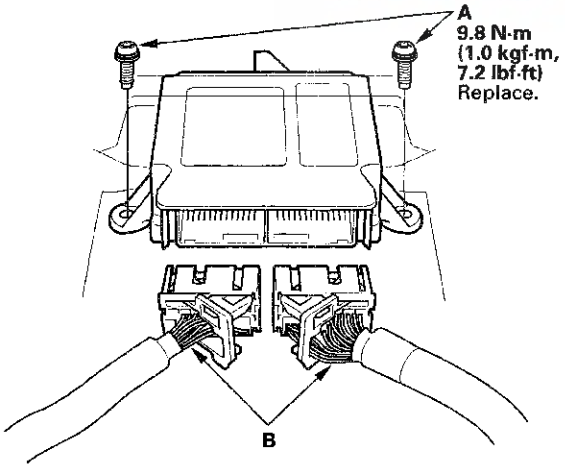

3. Do the battery terminal reconnection procedure (see page 22-89).

4. For 2-door: Make sure the SRS unit has the latest software. If it does not have the latest, update the software in the SRS unit (see page 24-37).

5. Calibrate the ODS unit (see page 24-38).

6. Do the ODS unit operation check (see page 24-39).

7. Confirm proper SRS operation: Turn the ignition switch ON (II); the SRS indicator should come on for about 6 seconds and then go off.

8. Reinstall all removed parts.

Side Impact Sensor (First) Replacement

4-Door

Removal

1. Do the battery terminal disconnection procedure (see page 22-89), then wait at least 3 minutes before starting work.

2. Remove the front seat assembly (see page 20-181).

3. Remove the lower B-pillar lower trim (see page 20-107).

4. Disconnect the SRS floor wire harness 2P connector (A) from the side impact sensor (first).

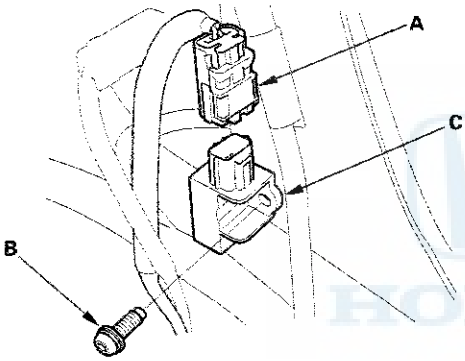

5. Using a TORX T30 bit, remove the TORX bolt (B), then remove the side impact sensor (first) (C).

Installation

1. Install the side impact sensor (first) with a new TORX bolt (A), then connect the SRS floor wire harness 2P connector (B) to the side impact sensor (first).

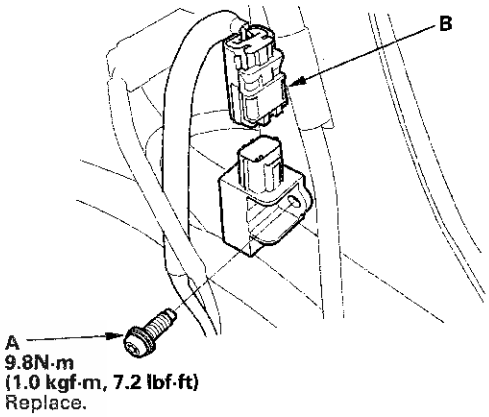

2. Reinstall all removed parts.

3. Do the battery terminal reconnection procedure (see page 22-89).

4. Confirm proper SRS operation: Turn the ignition switch to ON (II); the SRS indicator should come on for about 6 seconds and then go off.

Side Impact Sensor (First) Replacement (cont'd)

2-Door

Removal

1. Do the battery terminal disconnection procedure (see page 22-89), then wait at least 3 minutes before starting work.
2. Remove the door sill trim (see page 20-97).
3. Turn over the rear portion of the carpet as needed.
4. Disconnect the SRS floor wire harness 2P connector (A) from the side impact sensor (first).

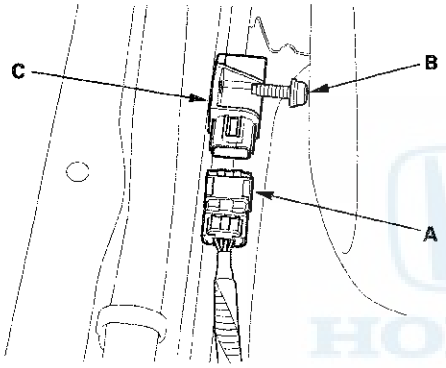

5. Using a TORX T30 bit, remove the TORX bolt (B), then remove the side impact sensor (first) (C).

Installation

1. Install the side impact sensor (first) with a new TORX bolt (A), then connect the SRS floor wire harness 2P connector (B) to the side impact sensor (first).

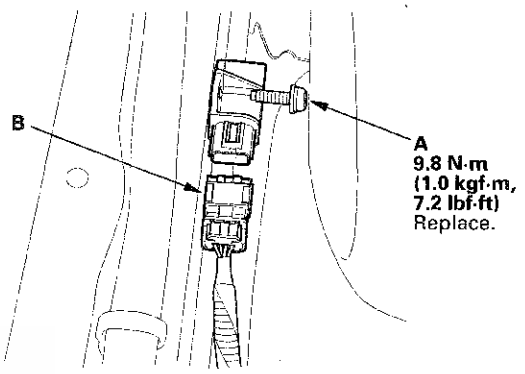

2. Do the battery terminal reconnection procedure (see page 22-89).
3. Confirm proper SRS operation: Turn the ignition switch to ON (II); the SRS indicator should come on for about 6 seconds and then go off.
4. Reinstall all removed parts.

Side Impact Sensor (Second) Replacement

4-Door

Removal

1. Do the battery terminal disconnection procedure (see page 22-89), then wait at least 3 minutes before starting work.

2. Remove the seat side bolster (see page 20-225).

3. Disconnect the SRS floor wire harness 2P connector (A) from the side impact sensor (second) (B).

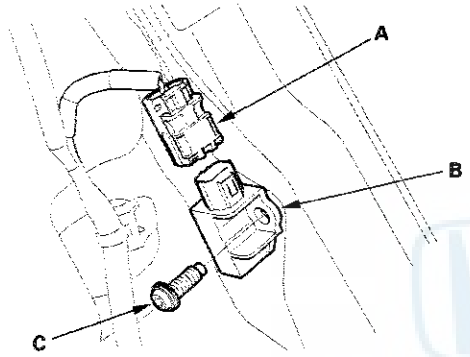

4. Using a TORX T30 bit, remove the TORX bolt (C) then remove the side impact sensor (second).

Installation

1. Install the side impact sensor (second) with a new TORX bolt (A) then connect the SRS floor wire harness 2P connector (B) to the side impact sensor (second).

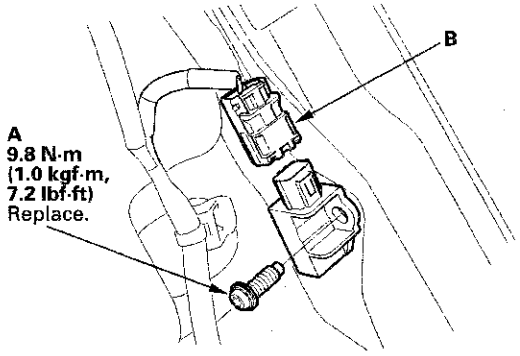

2. Do the battery terminal reconnection procedure (see page 22-89).

3. Confirm proper SRS operation: Turn the ignition switch to ON (II); the SRS indicator should come on for about 6 seconds and then go off.

4. Reinstall all removed parts.

Side Impact Sensor (Second) Replacement (cont'd)

2-Door

Removal

1. Do the battery terminal disconnection procedure (see page 22-89), then wait at least 3 minutes before starting work.

2. Remove the rear side trim panel (see page 20-118).

3. Disconnect the SRS floor wire harness 2P connector (A) from the side impact sensor (second) (B).

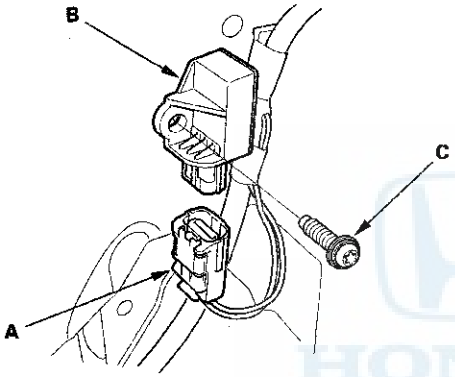

4. Using a TORX T30 bit, remove the TORX bolt (C) then remove the side impact sensor (second).

Installation

1. Install the side impact sensor (second) with a new TORX bolt (A) then connect the SRS floor wire harness 2P connector (B) to the side impact sensor (second).

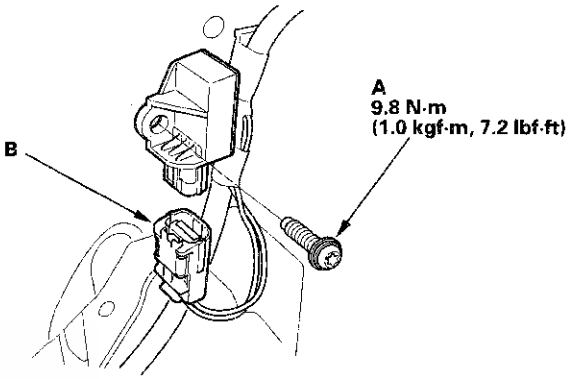

2. Do the battery terminal reconnection procedure (see page 22-89).

3. Confirm proper SRS operation: Turn the ignition switch to ON (II); the SRS indicator should come on for about 6 seconds and then go off.

4. Reinstall all removed parts.

Rear Safing Sensor Replacement

Removal

1. Do the battery terminal disconnection procedure (see page 22-89), then wait at least 3 minutes before starting work.

2. Remove the rear seat cushion (see page 20-225).

3. Disconnect the SRS floor wire harness 4P connector (A) from the rear safing sensor (B).

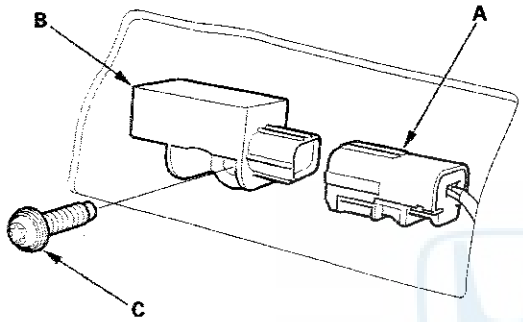

4. Remove the TORX bolt (C) using a TORX T30 bit, then remove the rear safing sensor.

Installation

1. Install the rear safing sensor with a new TORX bolt (A) then connect the SRS floor wire harness 4P connector (B) to the rear safing sensor (C).

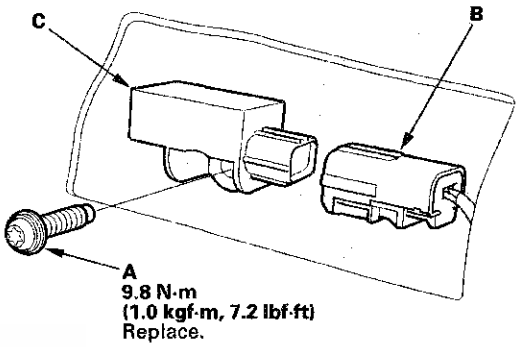

2. Do the battery terminal reconnection procedure (see page 22-89).

3. Confirm proper SRS operation: Turn the ignition switch to ON (II); the SRS indicator should come on for about 6 seconds and then go off.

4. Reinstall all removed parts.

Front Passenger's Weight Sensor Replacement

4-Door

Removal

NOTE:
- Removal of the front passenger's weight sensors must be done according to Precautions and Procedures (see page 24-23).
- The front passenger's weight sensors are part of the seat frame and must be replaced as an assembly.

1. Do the battery terminal disconnection procedure (see page 22-89), then wait at least 3 minutes before starting work.
2. Remove the front passenger's seat (see page 20-181).
3. Remove the front passenger's seat frame (see page 20-193).

Installation

NOTE:
- Be sure to install the harness wires so they are not pinched or interfering with other parts.
- The front passenger's height sensor are part of the seat frame and must be replaced as an assembly.

1. Install the parts in the reverse order of removal.
2. Do the battery terminal reconnection procedure (see page 22-89).
3. Calibrate the ODS unit (see page 24-38).
4. Confirm proper SRS operation: Turn the ignition switch to ON (II); the SRS indicator should come on for about 6 seconds and then go off.

2-Door

Removal

NOTE:
- Removal of the front passenger's weight sensors must be done according to Precautions and Procedures (see page 24-23).
- The front passenger's weight sensor are part of the seat rail and must be replaced as an assembly.

1. Do the battery terminal disconnection procedure (see page 22-89), then wait at least 3 minutes before starting work.

2. Remove the front passenger's seat assembly (see page 20-181).

3. Remove the upper rail outer cover and upper rail inner cover (see page 20-193).

4. Disconnect the sensor connectors (A) from the ODS unit harness, then remove the mounting bolts (B) from weight sensors (C).

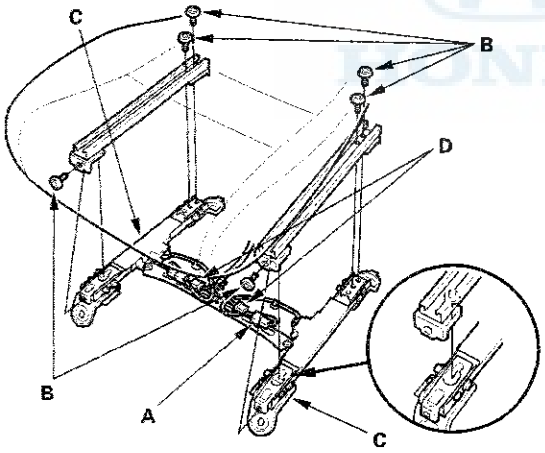

5. Disconnect the sensor connectors (D) from the ODS unit harness, then remove the front passenger's weight sensors.

Installation

NOTE:
- Be sure to install the harness wires so they are not pinched or interfere with other parts.
- Make sure both of the hooks (A) on the seat track are properly secured to the front bracket (B). If the hooks are not properly secured, the seat weight sensors will not perform properly.

1. Install and torque the front passenger's weight sensors with new mounting bolts (C) under the seat cushion.

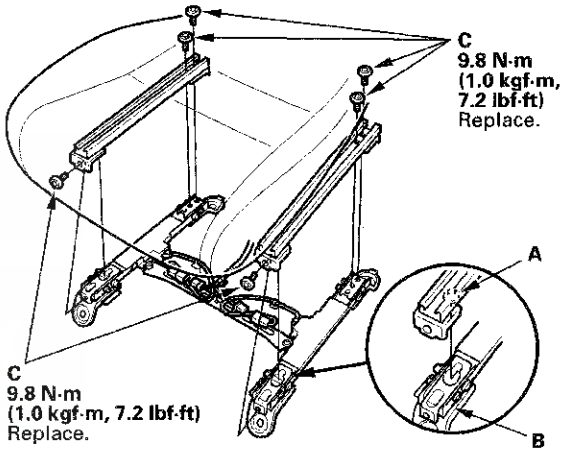

2. Install the front passenger's seat (see page 20-181).

3. Do the battery terminal reconnection procedure (see page 22-89).

4. Calibrate the ODS unit (see page 24-38).

5. Confirm proper SRS operation: Turn the ignition switch to ON (II); the SRS indicator should come on for about 6 seconds and then go off.

ODS Unit Replacement

Removal

1. Do the battery terminal disconnection procedure (see page 22-89), then wait at least 3 minutes before starting work.

2. Disconnect the front passenger's side airbag harness 2P connector (see step 4 on page 24-32).

3. Remove the front passenger's seat assembly (see page 20-181) and seat-back cover/pad:

   - 4-door (see page 20-205)
   - 2-door (see page 20-199)

4. Remove the cover (A), then disconnect the ODS unit 18P connector (B) from the ODS unit (C).

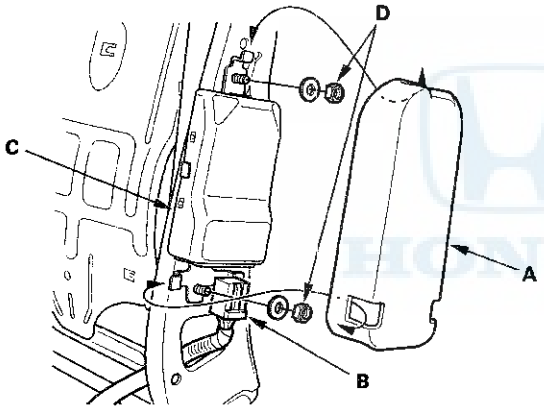

5. Remove the two nuts and washers (D) and the ODS unit.

Installation

1. Place the ODS unit (A) on the seat-back frame. Install the two washers and nuts, and torque the two nuts (B), and connect the ODS unit harness 18P connector (C) to the ODS unit. Reinstall the cover (D).

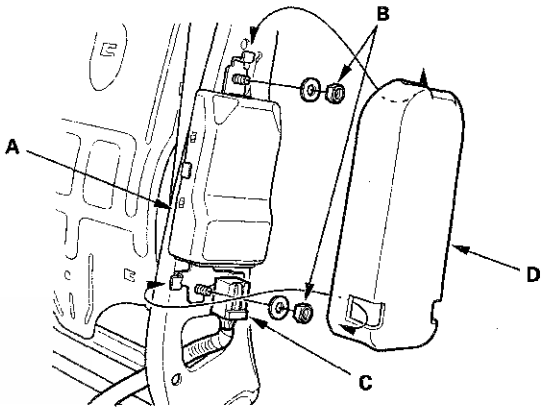

2. Install the seat-back cover:

   - 4-door (see page 20-205)
   - 2-door (see page 20-199)

3. Install the front passenger's seat assembly (see page 20-187), then connect the side airbag harness 2P connector.

4. Do the battery terminal reconnection procedure (see page 22-89).

5. Set the seat-back in the normal position, and make sure there is nothing on the front passenger's seat.

6. Initialize the ODS unit (see page 24-38).

7. Confirm proper SRS operation: Turn the ignition switch to ON (II); the SRS indicator should come on for about 6 seconds and then go off.

Front Impact Sensor Replacement

Removal

1. Do the battery terminal disconnection procedure (see page 22-89), then wait for 3 minutes before starting work.

2. Remove the front bumper (see page 20-239).

3. Left side: remove the intake air resonator (see page 11-361).

4. Disconnect the left or right engine compartment wire harness 2P connector (A). Using a TORX T30 bit, remove the TORX bolts (B), then remove the front impact sensor (C).

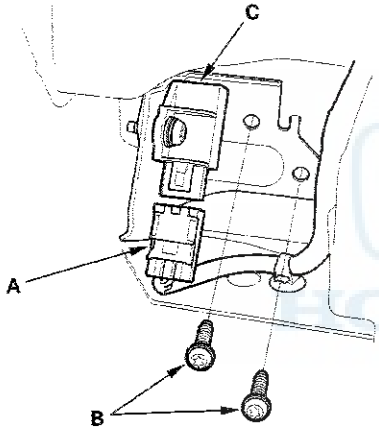

Installation

1. Install the front impact sensor with new TORX bolts (A), then connect the left or right engine compartment wire harness 2P connector (B) to the front impact sensor (C).

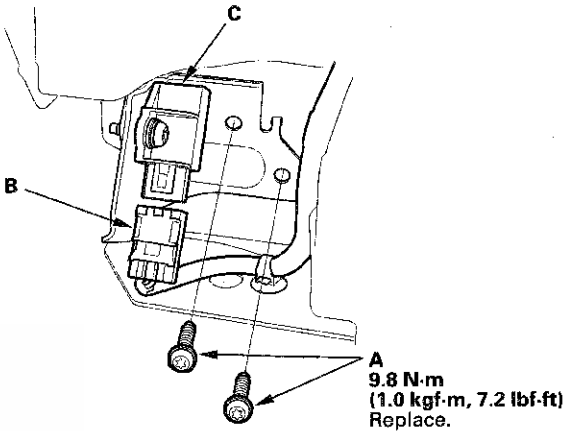

2. Do the battery terminal reconnection procedure (see page 22-89).

3. Confirm proper SRS operation: Turn the ignition switch to ON (II); the SRS indicator should come on for about 6 seconds and then go off.

4. Reinstall all removed parts.

Driver's Seat Position Sensor Replacement

Removal (Power seat)

NOTE:
- Removal of the driver's seat position sensor must be done according to Precautions and Procedures (see page 24-23).
- Do not turn the ignition switch to ON (II), and do not connect the battery cable while removing the driver's seat position sensor.

1. Raise the seat all the way up.
2. Do the battery terminal disconnection procedure (see page 22-89), then wait at least 3 minutes before starting work.
3. Remove the driver's seat assembly (see page 20-181).
4. Disconnect the driver's seat wire harness 2P connector (A) from the driver's seat position sensor.

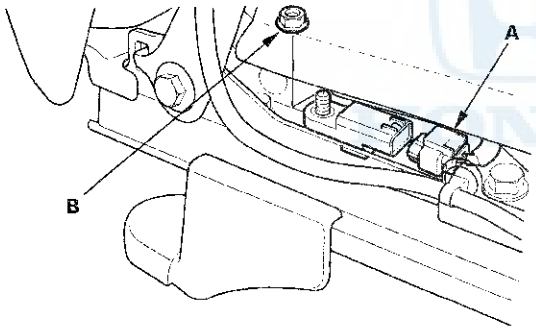

5. Remove the nut (B), then remove the driver's seat position sensor.

Installation (Power seat)

NOTE:
- Be sure to install the harness so it does not pinched or interfere with other parts.
- Do not turn the ignition switch to ON (II), and do not connect the battery cable while installing the driver's seat position sensor.

1. Install the driver's seat position sensor with a nut (A), then connect the driver's seat wire harness 2P connector to the driver's seat position sensor (B).

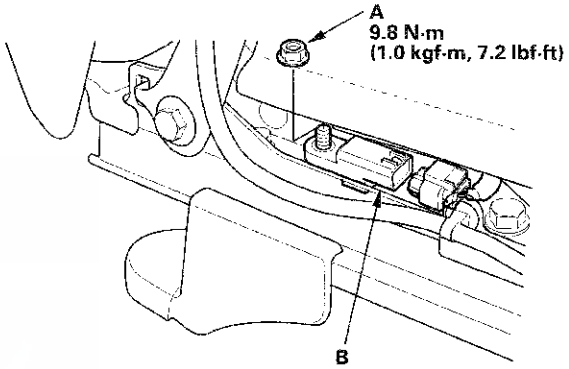

2. Reinstall the driver's seat assembly (see page 20-181).
3. Do the battery terminal reconnection procedure (see page 22-89).
4. Check the operation of the driver's seat position sensor with the HDS (see page 24-40).

Removal (Manual seat)

NOTE:
- Removal of the driver's seat position sensor must be done according to Precautions and Procedures (see page 24-23).
- Do not turn the ignition switch to ON (II), and do not connect the battery cable while removing the driver's seat position sensor.

1. Raise the seat all the way up.
2. Do the battery terminal disconnection procedure (see page 22-89), then wait at least 3 minutes before starting work.
3. Remove the driver's seat assembly (see page 20-181).
4. Remove the recline cover (see page 20-193).
5. Disconnect the seat position sensor harness 2P connector (A) from the driver's seat position sensor.

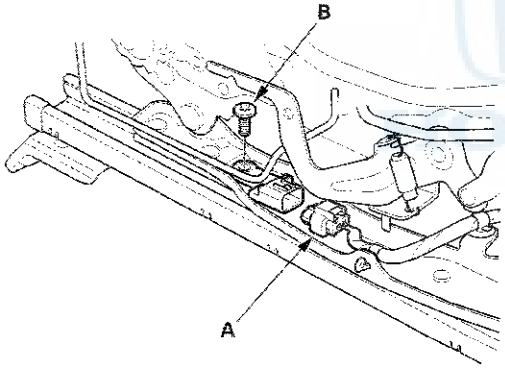

6. Using a TORX T30 bit, remove the TORX bolt (B), then remove the driver's seat position sensor.

Installation (Manual seat)

NOTE:
- Be sure to install the harness so it does not pinched or interfere with other parts.
- Do not turn the ignition switch to ON (II), and do not connect the battery cable while installing the driver's seat position sensor.

1. Install the driver's seat position sensor with a new TORX bolt (A), then connect the seat position sensor harness 2P connector to the driver's seat position sensor (B).

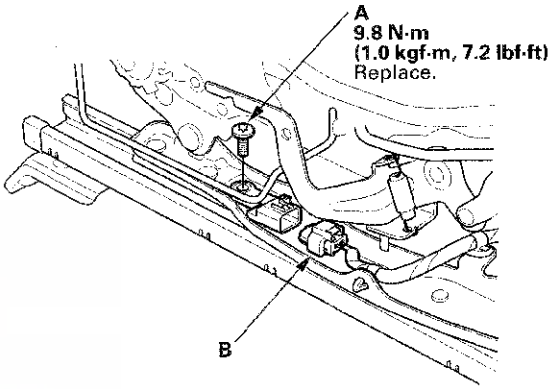

2. Install the recline cover (see page 20-193).
3. Install the driver's seat assembly (see page 20-181).
4. Do the battery terminal reconnection procedure (see page 22-89).
5. Check the operation of the driver's seat position sensor with the HDS (see page 24-40).

Passenger's Airbag Cutoff Indicator Replacement

1. With navigation: Remove the dashboard center vent (see page 20-164).

2. Without navigation: Remove the audio unit (see page 23-110).

3. Disconnect the 6P connector (A) from the passenger's airbag cutoff indicator (B).

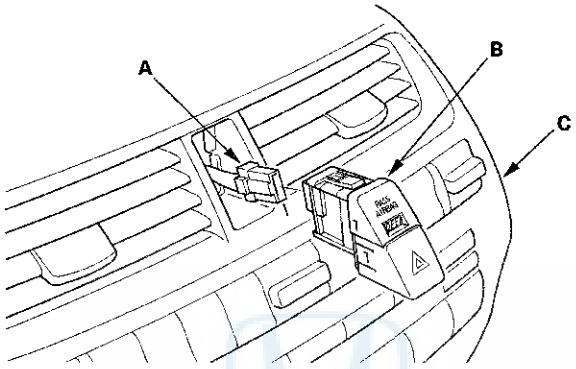

4. Push out the passenger's airbag cutoff indicator from behind the dashboard center vent/audio unit (C).

5. Reinstall the parts in the reverse order of removal.

NOTES

NOTES

" Portions of materials contained herein have been reprinted under license from America Honda Motor Co., Inc. License Agreement AH220 ."