Technical training.
Product information.

N63TU Engine

cardiagn.com

Edited for the U.S. market by:
BMW Group University
Technical Training
ST1209 9/1/2012

BMW Service

General notes

Symbols used

The following symbol/schematic diagram is used in this document to facilitate better comprehension or to draw attention to very important information:

⚠

Contains important safety information and information that needs to be observed strictly in order to guarantee the smooth operation of the system.

Information status and national-market versions

BMW Group vehicles meet the requirements of the highest safety and quality standards. Changes in requirements for environmental protection, customer benefits and design render necessary continuous development of systems and components. Consequently, there may be discrepancies between the contents of this document and the vehicles available in the training course.

This document basically relates to the European version of left hand drive vehicles. Some operating elements or components are arranged differently in right-hand drive vehicles than shown in the graphics in this document. Further deviations may arise as a result of the equipment specification in specific markets or countries.

Additional sources of information

Further information on the individual topics can be found in the following:

- Owner's Handbook
- Integrated Service Technical Application.

Contact: conceptinfo@bmw.de

©2012 BMW AG, Munich, Germany

Reprints of this publication or its parts require the written approval of BMW AG, Munich

The information contained in this document forms an integral element of the technical training of the BMW Group and is intended for the trainer and participants in the seminar. Refer to the current respective information systems of the BMW Group for any changes/additions to the technical data.

Information status: **April 2012**
VH-23/International Technical Training

cardiagn.com

N63TU Engine

Contents

1. Introduction **1**
- 1.1. Models 1
- 1.2. Technical data 1
  - 1.2.1. Full load diagram 3
- 1.3. New features/Changes 3
- 1.4. Engine identification 5
  - 1.4.1. Engine designation 5
  - 1.4.2. Engine identification 5

2. Engine Components **7**
- 2.1. Engine housing 7
  - 2.1.1. Crankcase 8
  - 2.1.2. Cylinder head gasket 8
  - 2.1.3. Cylinder head 8
  - 2.1.4. Cylinder head cover 10
  - 2.1.5. Oil sump 18
- 2.2. Crankshaft drive 19
  - 2.2.1. Crankshaft with bearings 19
  - 2.2.2. Connecting rod with bearing 20
  - 2.2.3. Piston with piston rings 21
- 2.3. Camshaft drive 22
- 2.4. Valvetrain 23
  - 2.4.1. Design 23
  - 2.4.2. Valvetronic 27
- 2.5. Belt drive 30

3. Oil Supply **32**
- 3.1. Overview 32
  - 3.1.1. Hydraulic circuit diagram 32
- 3.2. Oil pump and pressure regulation 34
  - 3.2.1. Oil pump 34
- 3.3. Oil cooling and filtering 35
  - 3.3.1. Oil cooling 36
  - 3.3.2. Oil filtering 36
- 3.4. Oil monitoring 36
  - 3.4.1. Oil level 36
- 3.5. Oil spray nozzles 36
  - 3.5.1. Piston crown cooling 36
  - 3.5.2. Chain drive 37
  - 3.5.3. Camshaft 38
  - 3.5.4. Valvetronic servomotor 38

cardiagn.com

N63TU Engine

Contents

4. Cooling **39**
4.1. System overview 39
4.1.1. Engine cooling circuit 40
4.1.2. Charge air coolers and DME cooling circuit 45
4.2. Heat management 48
4.2.1. Auxiliary water pump 48
4.2.2. Map thermostat 48

5. Intake/Exhaust Emission System **49**
5.1. Overview 49
5.2. Intake air system 51
5.2.1. Intake silencer 52
5.2.2. Hot film air mass meter 52
5.2.3. Intake manifold 52
5.3. Exhaust turbocharger 53
5.3.1. Function 54
5.4. Exhaust emission system 54
5.4.1. Exhaust manifold 54
5.4.2. Catalytic converter 55

6. Vacuum System **57**

7. Fuel Preparation **58**
7.1. Overview 58
7.2. Fuel pump control 59
7.3. High pressure pump 59
7.4. Injectors 60

8. Fuel Supply **61**

9. Engine Management System **62**
9.1. Overview 62
9.2. Engine control unit 68
9.2.1. Overall function 70

cardiagn.com

N63TU Engine

1. Introduction

The N63TU engine is the predecessor to the N63. The further developed N63TU engine is the latest fuel-mixture generation technology Turbo-Valvetronic Direct Injection TVDI. There are strong similarities here to the N20 or N55 engines. The new engine boasts better performance data at reduced fuel consumption and CO_2 emissions.

This training material describes the differences to the N63 engine.

1.1. Models

Development series	N63B44O1	Series introduction
F01	BMW 750i BMW 750i xDrive	07/2012
F02	BMW 750Li BMW 750Li xDrive	07/2012
F06	BMW 650i BMW 650i xDrive	07/2012
F07	BMW 550i BMW 550i xDrive	07/2012
F12	BMW 650i BMW 650i xDrive	07/2012
F13	BMW 650i BMW 650i xDrive	07/2012

1.2. Technical data

	Unit	N63B44O0	N63B44O1
Development series		F01	F01 LCI
Model designation		BMW 750i	BMW 750i
Design		V8	V8
Displacement	[cm³]	4395	4395
Firing order		1-5-4-8-6-3-7-2	1-5-4-8-6-3-7-2
Bore/Stroke	[mm]	89/88.3	89/88.3
Power output at engine speed	[kW] (HP) [rpm]	300 (400) 5500 - 6400	330 (445) 5500 - 6000
Cutoff speed	[rpm]	6500	6500
Power output per liter	[kW (HP) x l]	68.3 (90.9)	75.1 (102)
Torque at engine speed	[Nm] (lb-ft) [rpm]	600 (400) 1750 - 4500	650 (480) 2000 - 4500
Compression ratio	[ε]	10.0	10.0
Valves per cylinder		4	4
Fuel rating	[RON]	95	98

cardiagn.com

N63TU Engine
1. Introduction

	Unit	N63B44O0	N63B44O1
Fuel	[RON]	91 - 98	91 - 98
Fuel consumption complying with EU	[l/100 km]	11.4	8.6
CO_2 emissions	[g/km]	266	199
Digital Engine Electronics (DME)		MSD85	MEVD17.2.8
Exhaust emissions legislation		EURO 5 (ULEV II)	EURO 5 (ULEV II)
Maximum speed	[km/h (mph)]	250 (155)	250 (155)
Acceleration 0–100 km/h/62mph	[s]	5.2	4.8
Vehicle curb weight DIN/EU	[kg]	1945/2020	1940/2015

cardiagn.com

N63TU Engine

1. Introduction

1.2.1. Full load diagram

BMW N63/N63TU in the F01

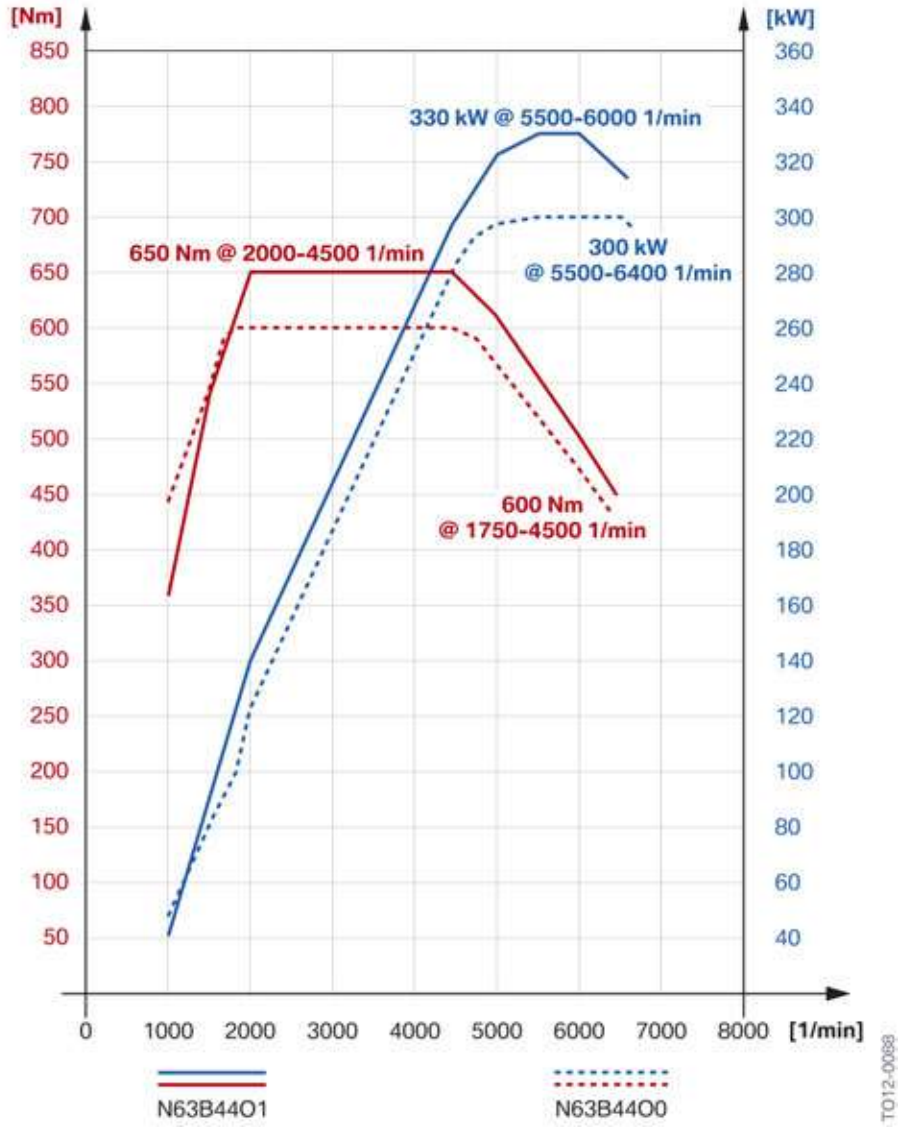

Full load diagram comparing N63B44O0 engine with N63B44O1 engine

1.3. New features/Changes

The following table provides an overview of the changes to the N63 engine.

cardiagn.com

N63TU Engine

1. Introduction

System	Comment
Engine mechanical	• New cylinder head due to use of the Turbo Valvetronic Direct Injection (TVDI) procedure • 3rd generation Valvetronic • New valvetrain with modified timing • Adoption of VANOS from the N55 engine • New cylinder head cover with adapted crankcase ventilation • Pistons with modified piston crown geometry • New connecting rod with even pitch and adaptation of the crankcase due to modified connecting rod shape • Adapted crankshaft • Chain drive with modified guide rails and an extruded chain with 142 elements.
Oil supply	• Pendulum slide cell pump with small overall width • Eight individual oil spray nozzles for piston crown cooling.
Cooling	• Integration of the two engine control units in the low-temperature circuit and cooling over the back panel with cooling pipe • Expansion tank under the left side wall with separate filling hopper.
Intake and exhaust emission systems	• Adaptation of the manifold for the air intake duct due to new geometry of the cylinder head cover • Use of the hot film air mass meter 7 • Adoption of the charge air temperature and intake-manifold pressure sensor from the N20 engine • Exhaust turbocharger with new compressor and modified wastegate valves • Discontinuation of the blow-off valves.
Vacuum system	• Two-stage vacuum pump with new arrangement of the bolt connection • Vacuum reservoir for the wastegate valves in the V-area of the engine.
Fuel preparation	• Use of the known high-pressure injection with injectors and high pressure pump HDP5 • Discontinuation of fuel low-pressure sensor
Engine management system	• New dual control unit concept with one control unit per bank • Oil level sensor with an additional temperature sensor in the main oil duct behind the starter motor.

cardiagn.com

N63TU Engine

1. Introduction

1.4. Engine identification

1.4.1. Engine designation

The version N63B44O1 of the N63TU engine is described in this document.

The engine designation in the technical documentation, is used to ensure clear identification of the engine.

The technical documentation also contains the short form of the engine designation N63TU, which only indicates the engine type.

Itemization

Index	Explanation
N	BMW Group "New Generation"
6	V8 engine
3	Engine with exhaust turbocharger, Valvetronic and direct fuel injection (TVDI)
B	Gasoline engine, longitudinally installed
44	4.4 liters displacement
O	Upper performance class
1	First revision

1.4.2. Engine identification

The engines have an identification mark on the crankcase to ensure clear identification and classification. This engine identification is necessary for approval by government authorities. The first six digits of the engine identification correspond to the engine designation.

The engine serial number can be found on the engine above the engine identification. This consecutive (serial) number, in conjunction with the engine identification, permits clear identification of each individual engine.

cardiagn.com

N63TU Engine

1. Introduction

N63TU engine identification and engine number on the right front of the engine

Index	Explanation
22620097	Individual consecutive (serial) engine number
N	BMW Group "New Generation"
6	V8 engine
3	Engine with exhaust turbocharger, Valvetronic and direct fuel injection (TVDI)
B	Gasoline engine, longitudinally installed
44	4.4 liters displacement
B	Type test concerns, standard

cardiagn.com

N63TU Engine

2. Engine Components

2.1. Engine housing

The engine housing is comprised of the engine block, cylinder heads, cylinder head covers, oil sump and the gaskets.

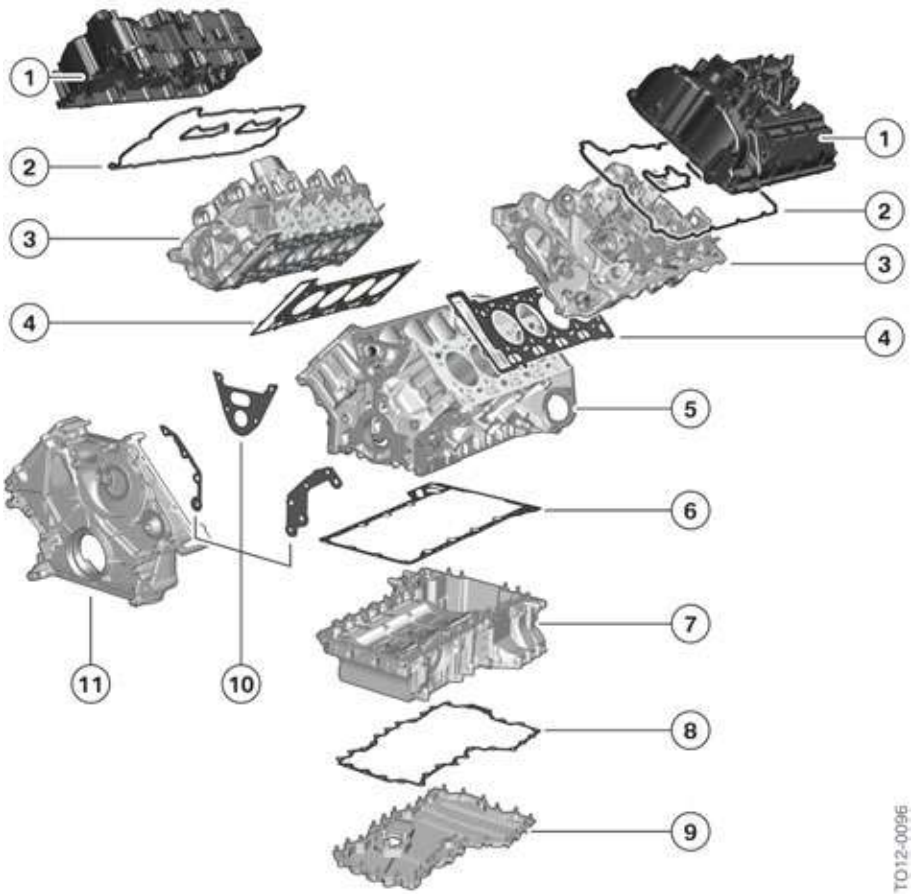

N63TU engine, structure of engine housing

Index	Explanation
1	Cylinder head cover
2	Profile seal
3	Cylinder head
4	Cylinder head gasket
5	Crankcase
6	Gasket for upper oil sump section
7	Upper oil sump section

cardiagn.com

Index	Explanation
8	Gasket for oil sump
9	Oil sump
10	Gasket
11	Gear case cover

2.1.1. Crankcase

The crankcase is manufactured from die-cast aluminium GL-AlSi917Cu4MG, as on the N63 engine. The cylinder bores are made from Alusil. The crankcase has been revised as now only connecting rods with an even pitch are used.

2.1.2. Cylinder head gasket

A three-layer spring steel gasket is used for the cylinder head gasket. There is a stopper plate (2) in the area of the cylinder bores in order to achieve sufficient contact pressure for sealing. The contact surfaces for the cylinder head and the engine block are layered and have a partial fluorocaoutchouc coating with anti-stick coating.

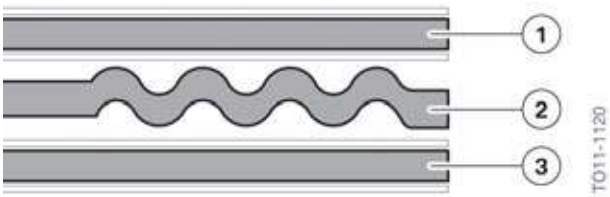

N63TU engine, cylinder head gasket

Index	Explanation
1	Top spring steel layer with anti-stick coating
2	Stopper layer
3	Bottom spring steel layer with anti-stick coating

2.1.3. Cylinder head

The cylinder head of the N63TU top engine is a new development with integrated air ducts for the crankcase ventilation in the intake area.

3rd generation Valvetronic technology (from the N55 engine) is also used in the N63TU top engine. Although in this case the Valvetronic servomotor is mounted on the outer side at the cylinder head.

The combination of exhaust turbocharger, Valvetronic and direct fuel injection is known as **T**urbo **V**alvetronic **D**irect **I**njection (TVDI).

cardiagn.com

N63TU Engine
2. Engine Components

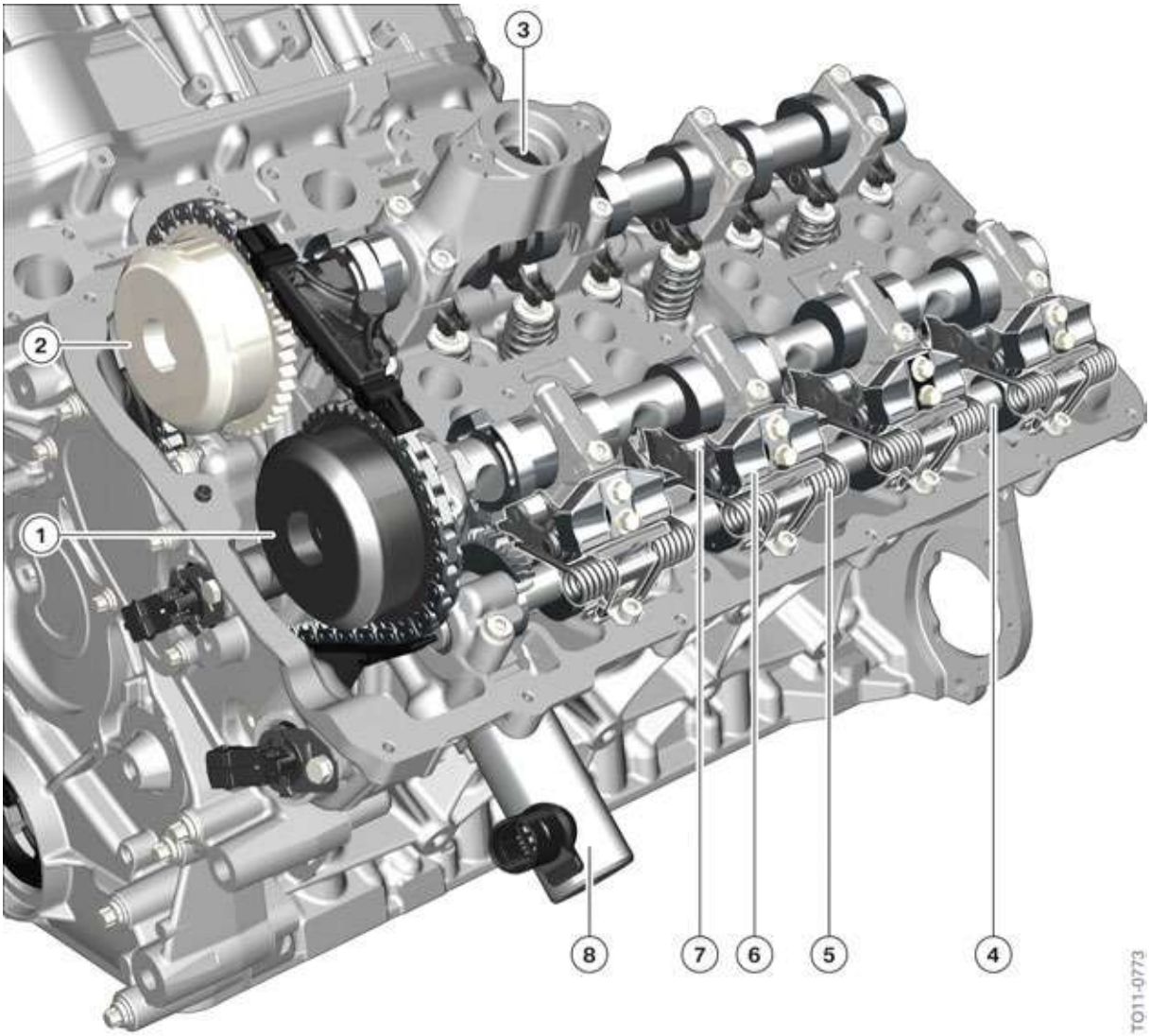

N63TU engine, cylinder head with Valvetronic

Index	Explanation
1	VANOS, intake side
2	VANOS, exhaust side
3	Roller tappet, high pressure pump
4	Eccentric shaft
5	Torsion spring
6	Gate
7	Intermediate lever
8	Valvetronic servomotor

cardiagn.com

2.1.4. Cylinder head cover

Design

The cylinder head cover is a new design with adapted crankcase ventilation and line routing. A ventilation register with an additional ventilation line is used. Each bank has its own oil separator. An additional line from the crankcase ventilation to the air intake system is not used as corresponding bore holes for the individual intake ports are integrated in the cylinder head.

The camshaft sensors are positioned on the front of the cylinder head cover.

A labyrinth oil separator is used to separate the oil from the blow-by gas. A pre-separator (7) and a fine separating plate with very small air holes (6) are installed in the flow direction. The oil droplets are separated at these barriers and returned to the cylinder head via the oil return lines (9 and 10). An impact surface (5) with an upstream fine filter mesh ensures further separation of oil particles. The oil return (10) is equipped with a non-return valve in order to prevent direct intake of blow-by gasses without separation. If the oil level increases in this pipe, the non-return valve opens and the oil drops into the cylinder head. Finally the cleaned blow-by gases are fed into the intake system depending on the operating condition of the engine via the non-return valve (1) or via the volume control valves (12 and 3).

cardiagn.com

N63TU Engine

2. Engine Components

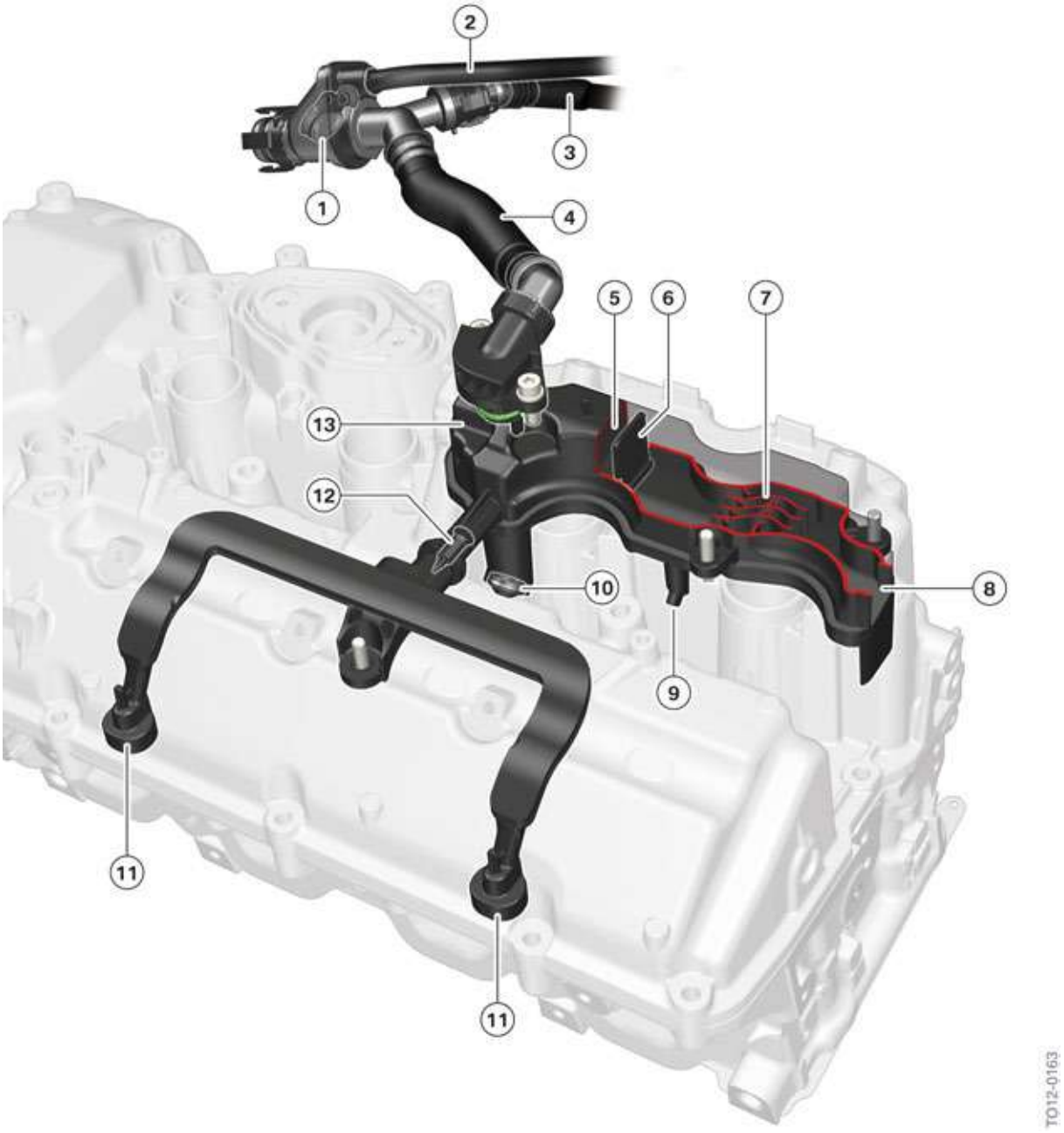

N63TU engine, cylinder head cover with crankcase ventilation

Index	Explanation
1	Non-return valve for the clean air pipe with leak hole
2	Purge air line
3	Intake pipe with volume control valve
4	Line to clean air pipe
5	Impact surface with upstream fine filter mesh

cardiagn.com

Index	Explanation
6	Fine separating plate with very small air holes
7	Pre-separator
8	Inlet for blow-by gases
9	Oil return
10	Oil return with non-return valve
11	Connecting line via blow-by-gas channel for the intake port
12	Volume control valve for the air intake system with throttle function
13	Oil separator

Crankcase ventilation in naturally aspirated mode

In the naturally aspirated mode there is vacuum in the air intake system (12). The two volume control valves (3) are opened. The cleaned blow-by gases reach the inlet areas of both banks and thus the air intake system through the left oil separator via the intake pipe (5) and ducts in the cylinder head (19). As there is a risk that oil may be drawn in via the crankcase ventilation in the case of large vacuums, the volume control valve has a throttle function and limits the flow and thus also the pressure level in the crankcase.

The vacuum in the crankcase ventilation keeps the non-return valves (2 and 6) closed. Fresh air flows from both clean air pipes through the right oil separator into the inside of the engine via the leakage holes. The vacuum in the crankcase ventilation is thus restricted. At the same time the chemical ageing of the lubricating oil and also the water content in the blow-by gases are reduced by flushing the crankcase with fresh air.

cardiagn.com

N63TU Engine

2. Engine Components

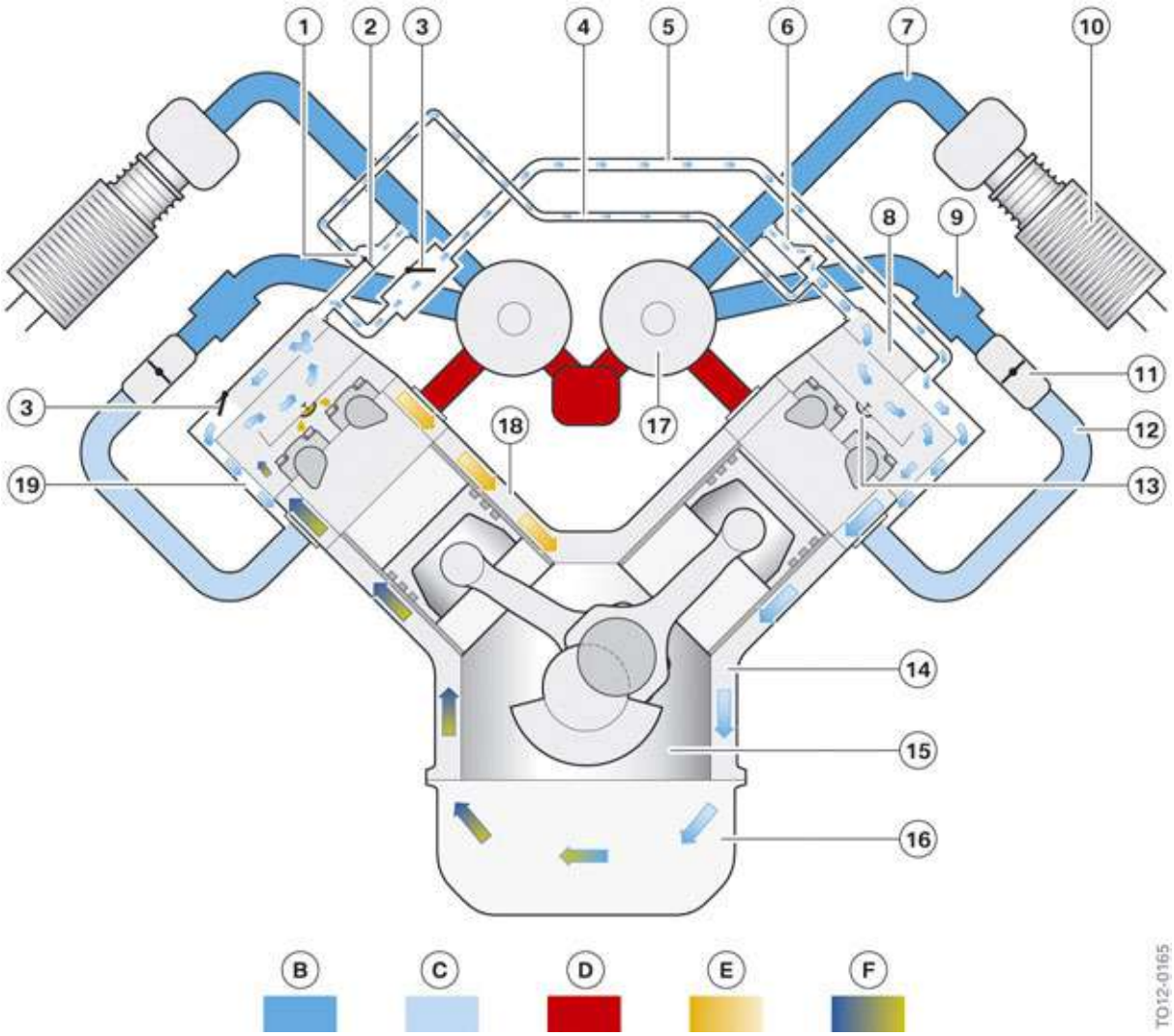

N63TU engine, overview of crankcase ventilation in the naturally aspirated engine operation

Index	Explanation
B	Ambient pressure
C	Vacuum
D	Exhaust gas
E	Oil
F	Blow-by gases
1	Leakage hole in the housing of the non-return valve
2	Non-return valve for the clean air pipe
3	Volume control valve for the air intake system with throttle function
4	Purge air line
5	Intake system from bank 2 to bank 1

cardiagn.com

N63TU Engine
2. Engine Components

Index	Explanation
6	Line to the clean air pipe with non-return valve and leakage hole
7	Clean air pipe
8	Oil separator
9	Charge air cooler
10	Intake silencer with hot film air mass meter 7
11	Throttle valve
12	Intake manifold
13	Oil return
14	Ventilation duct
15	Crank chamber
16	Oil sump
17	Exhaust turbocharger
18	Oil return duct
19	Duct in the cylinder head

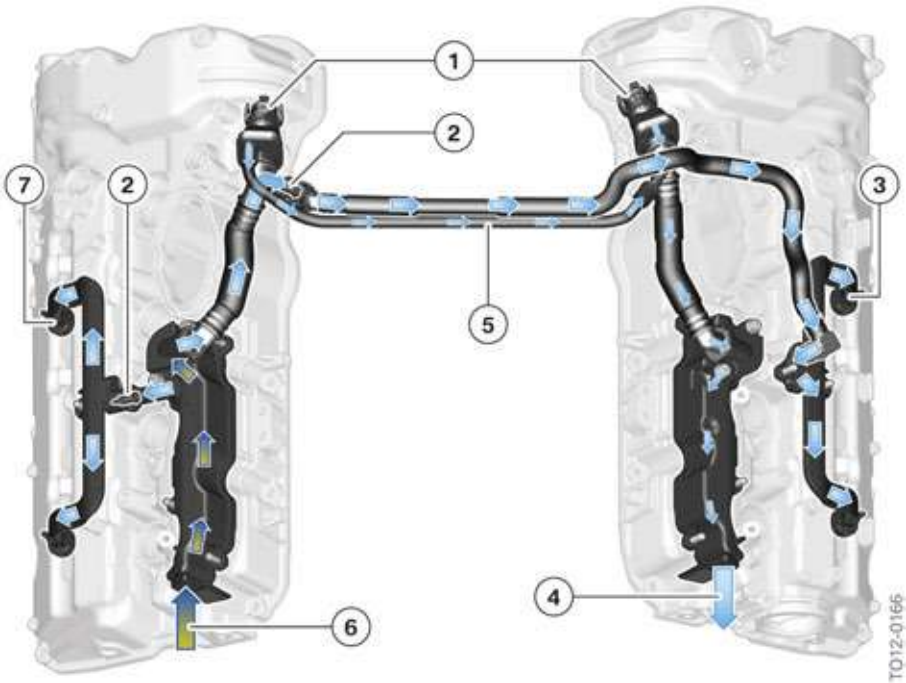

N63TU engine, components of the crankcase ventilation in the naturally aspirated mode

cardiagn.com

Index	Explanation
1	Fresh air supply via leakage holes when non-return valves are closed
2	Volume control valves open
3	Inlet of the blow-by gases to the inlet area of the cylinder head
4	Supply of scavenging air via the oil separator to the crankcase
5	Purge air line
6	Intake of blow-by gases to the oil separator
7	Intake of the cleaned blow-by gases via ducts to the inlet area of the cylinder head

Crankcase ventilation in boost mode

In boost mode the pressure in the intake system (12) increases and thus closes the volume control valves (3). As there is a vacuum in this operating condition in the clean air pipe (7), the non-return valves (2 and 6) for the clean air pipe thus open and the cleaned blow-by gases are sent via the compressor of the turbocharger and the charge air cooler (9) into the air intake system.

cardiagn.com

N63TU Engine
2. Engine Components

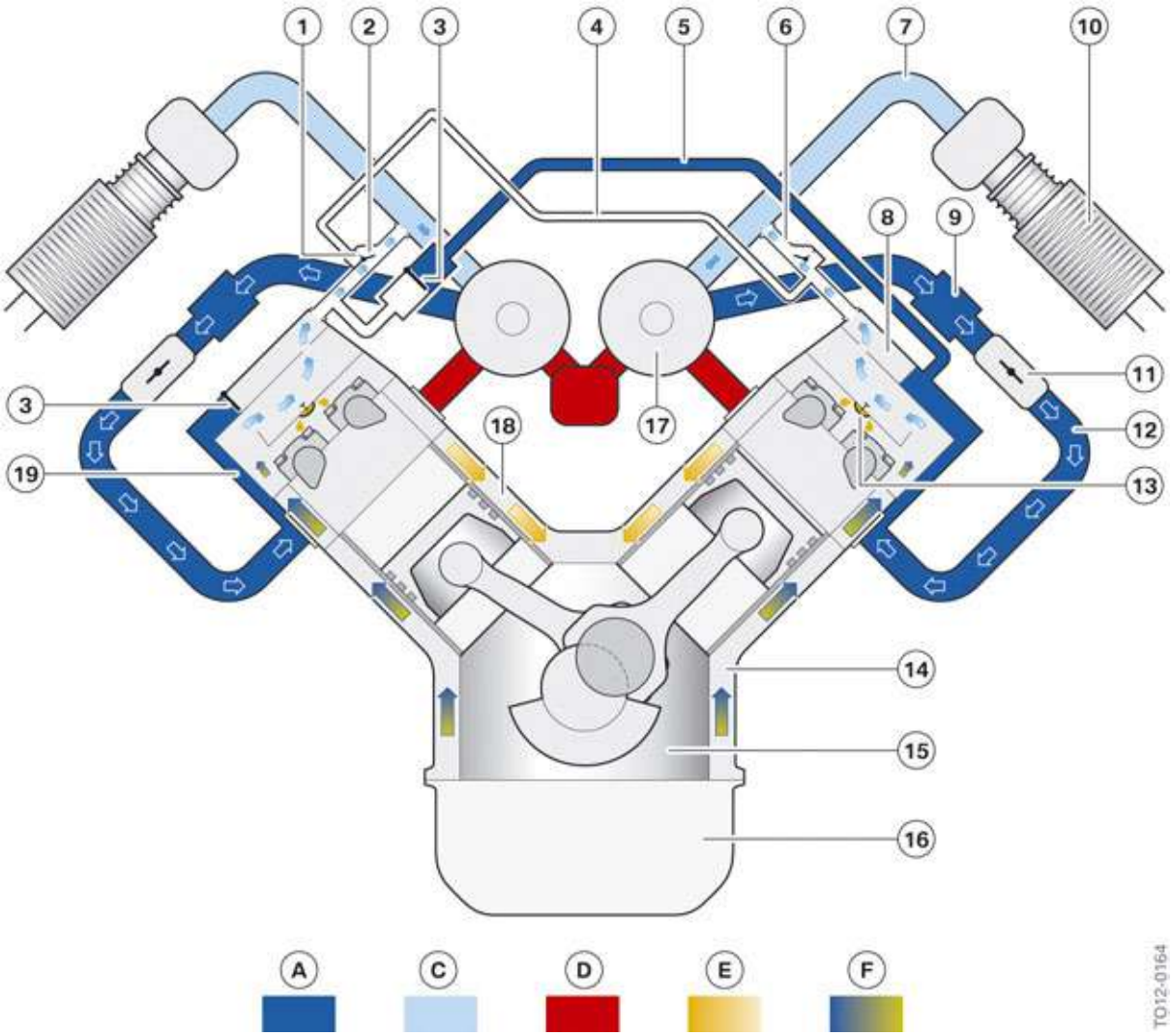

N63TU engine, overview of ventilation in boost mode

Index	Explanation
A	Charging pressure
C	Vacuum
D	Exhaust gas
E	Oil
F	Blow-by gases
1	Leakage hole in the housing of the non-return valve
2	Non-return valve for the clean air pipe open
3	Volume control valves for the intake system with throttle function, closed
4	Purge air line
5	Intake pipe from bank 2 to bank 1

cardiagn.com

Index	Explanation
6	Line to the clean air pipe with open non-return valve
7	Clean air pipe
8	Oil separator
9	Charge air cooler
10	Intake silencer with hot film air mass meter 7
11	Throttle valve
12	Intake system
13	Oil return
14	Ventilation duct
15	Crank chamber
16	Oil sump
17	Exhaust turbocharger
18	Oil return duct
19	Duct in the cylinder head

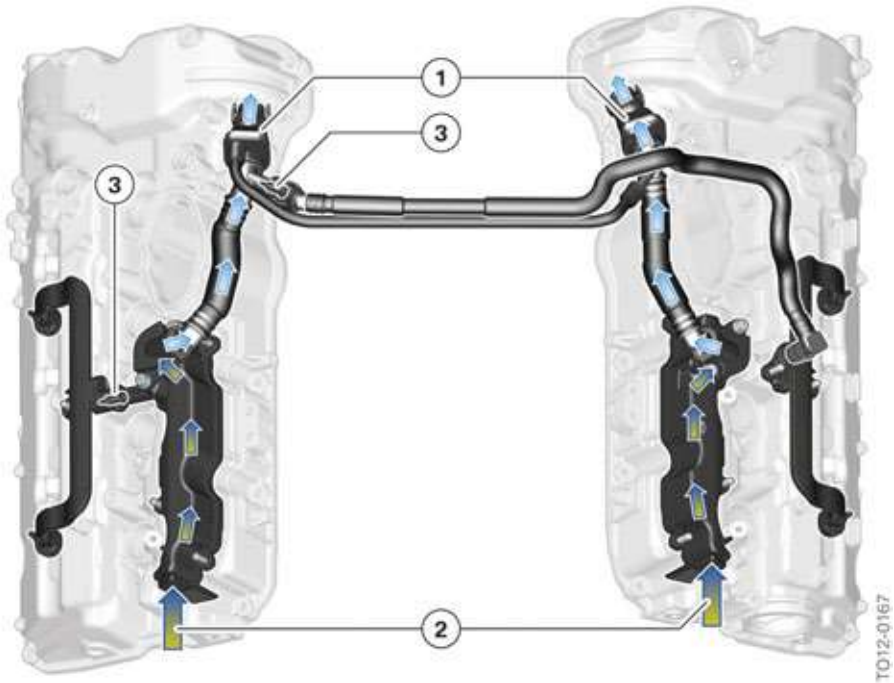

N63TU, components of the crankcase ventilation in boost mode

Index	Explanation
1	Non-return valves for the clean air pipe open
2	Intake of blow-by gases to the oil separator
3	Volume control valves closed

cardiagn.com

2.1.5. Oil sump

The oil sump is made from aluminium. It is designed as a one-piece component, known from the N63 engine. The oil filter screen is integrated in the upper oil sump section.

The oil pump is bolted to the upper oil sump section and driven via a chain by the crankshaft. The oil deflector is integrated in the upper oil sump section. The oil drain plug in the oil filter cover is no longer used.

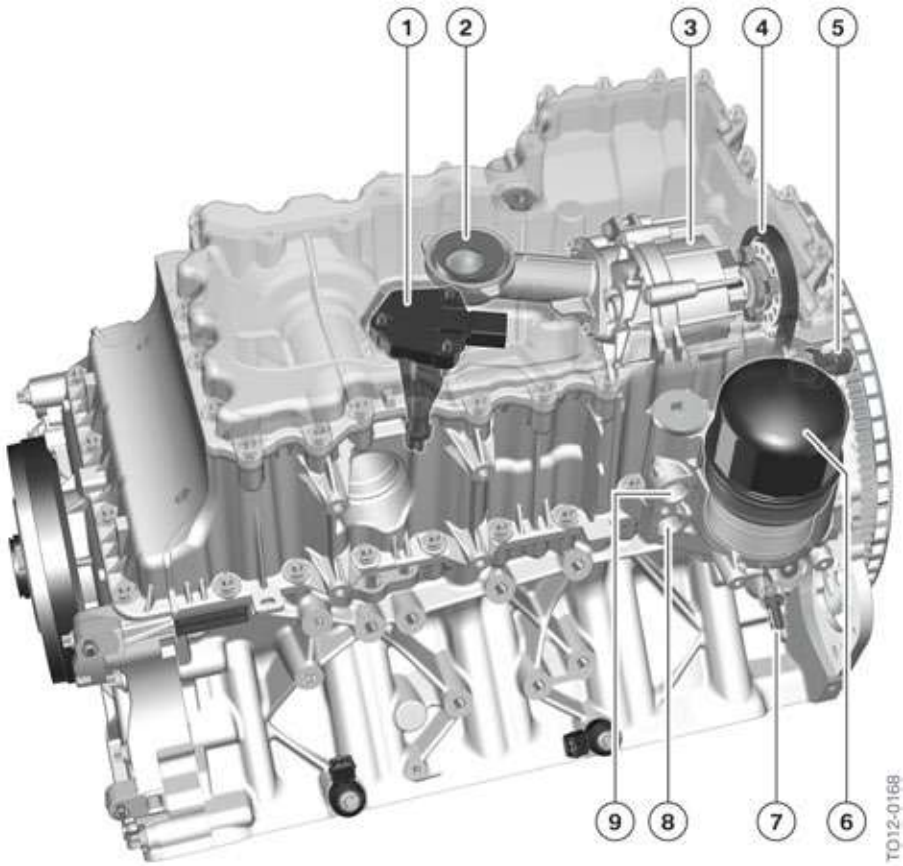

N63TU engine, upper oil sump section with oil pump

Index	Explanation
1	Oil level sensor
2	Intake pipe for the pressure pump
3	Pendulum slide cell pump
4	Chain drive of the crankshaft
5	Oil pressure switch
6	Oil filter cover without oil drain plug
7	Oil temperature sensor
8	Connection from the engine oil cooler
9	Connection to the engine oil cooler

cardiagn.com

2.2. Crankshaft drive

The crankshaft with connecting rods and pistons have changed in comparison to the N63 engine. The weight of the crankshaft has been optimized and the connecting rods are no longer diagonal, but have an even pitch. The piston weight was also reduced.

N63TU, crankshaft drive with connecting rod and piston

Index	Explanation
1	Crankshaft
2	Oil pump drive gear
3	Camshafts drive gear

2.2.1. Crankshaft with bearings

Crankshaft

The crankshaft of the N63TU engine has a stroke of 88.3 mm and is made of the material C38. It is a forged with a hardened surface layer and six balance weights.

Crankshaft bearings

The crankshaft is supported by five bearings. The two-material thrust bearing is located in the middle at the third bearing position. Robust lead-free two-material bearings are used.

cardiagn.com

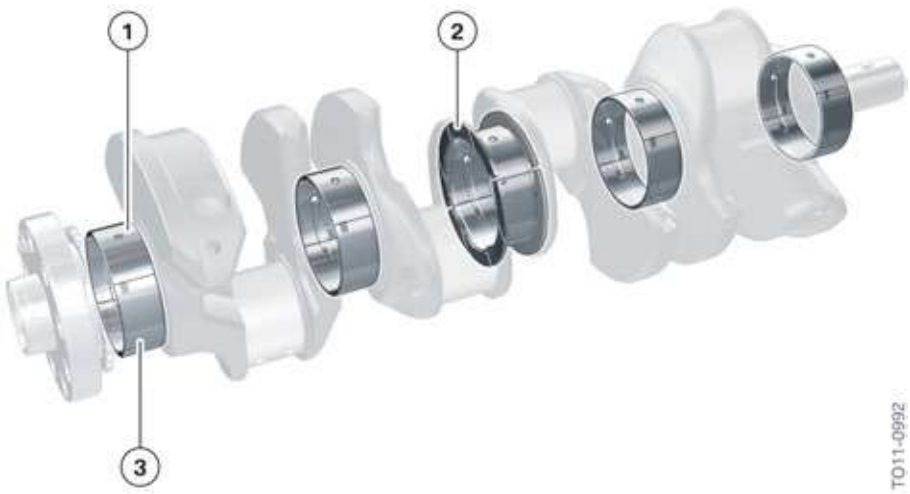

N63TU, crankshaft bearings

Index	Explanation
1	Upper bearing shell with groove and oil hole
2	Thrust bearing with groove and oil hole
3	Lower bearing shell without groove

The identification markings for the bearings are stamped on the crankcase and on the crankshaft. Please refer to the repair instructions if the crankshaft is to be fitted with new bearings.

2.2.2. Connecting rod with bearing

Connecting rod

The connecting rod of the N63TU engine has been redesigned. It is a cracked forged connecting rod with even pitch. A shaped bore is fitted in the connecting rod eye. The force acting from the piston via the piston pin is optimally distributed to the bushing surface by this shaped bore and the edge load.

cardiagn.com

TO11-0776

N63TU, cracked connecting rod with even pitch

Bearings

The connecting rod bearing shells are lead-free and robust electroplated. The bearing pairs are marked in red/blue. The blue bearing is on the rod side, the red bearing is installed on the cap.

2.2.3. Piston with piston rings

Cast pistons with a Mahle piston ring package are used. The piston crown shape is adapted accordingly to the combustion process, the valve positions and the use of the injectors with multiple nozzles. The piston pin was manufactured 3 mm (0.11 in) shorter as a result of the new piston and is now 57 mm (2.24 in) long. The piston weight was reduced by 60 g (2.1 oz) per piston with the new design despite the increased ignition pressure.

cardiagn.com

N63TU, cast piston with piston rings

Index	Explanation
1	Plain rectangular compression ring with rounded groove (B-ring)
2	Taper faced piston ring (NM-ring)
3	Oil scraper ring with spiral expander (DSF-ring)

2.3. Camshaft drive

A toothed roller-type chain with 142 elements is used per bank to drive the camshafts. This is supplied with oil via the oil spray nozzle in the chain tensioner. Tensioning rail, guide and slide rails are now different parts for both banks. The tensioning rail with an integrated thrust piece is made completely from plastic.

cardiagn.com

N63TU Engine
2. Engine Components

N63TU, camshaft drive

Index	Explanation
1	VANOS, exhaust side
2	VANOS, intake side
3	Chain tensioner
4	Tensioning rail
5	Tooth-type chain
6	Crankshaft gear

2.4. Valvetrain

2.4.1. Design

In the N63TU engine the fully variable valve lift control is also used in addition to double VANOS. The valvetrain itself is comprised of all known components.

cardiagn.com

N63TU Engine
2. Engine Components

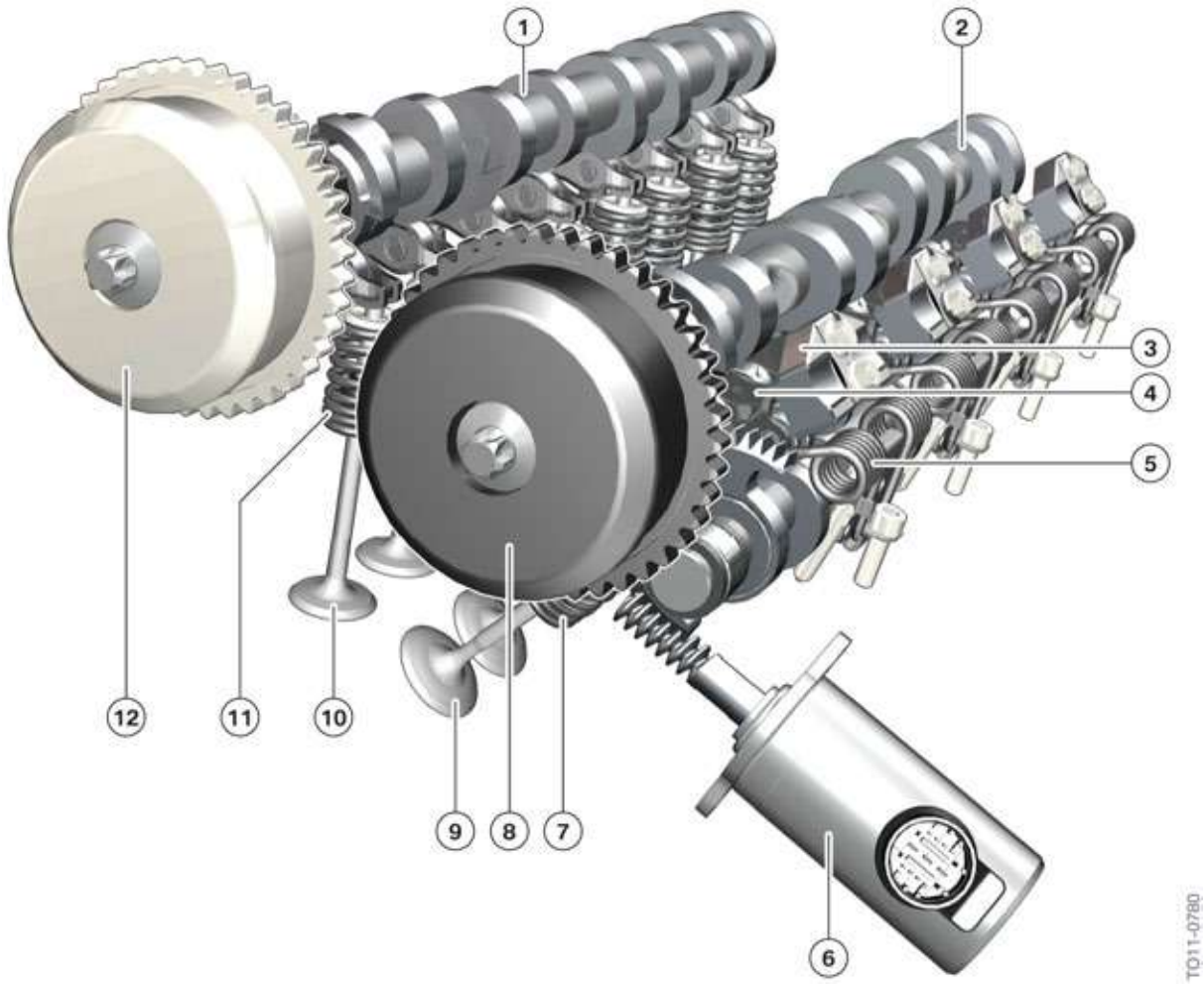

N63TU, valvetrain

Index	Explanation
1	Exhaust camshaft
2	Intake camshaft
3	Gate
4	Intermediate lever
5	Torsion spring
6	Valvetronic servomotor
7	Valve spring, intake valve
8	VANOS, intake side
9	Intake valve
10	Exhaust valve
11	Valve spring, exhaust valve
12	VANOS, exhaust side

cardiagn.com

N63TU Engine

2. Engine Components

Camshafts

The N63TU engine uses the same lightweight construction camshafts as N63. These composite camshafts are assembled from individual components (press fitted onto knurled points) rather than machined from an solid blank.

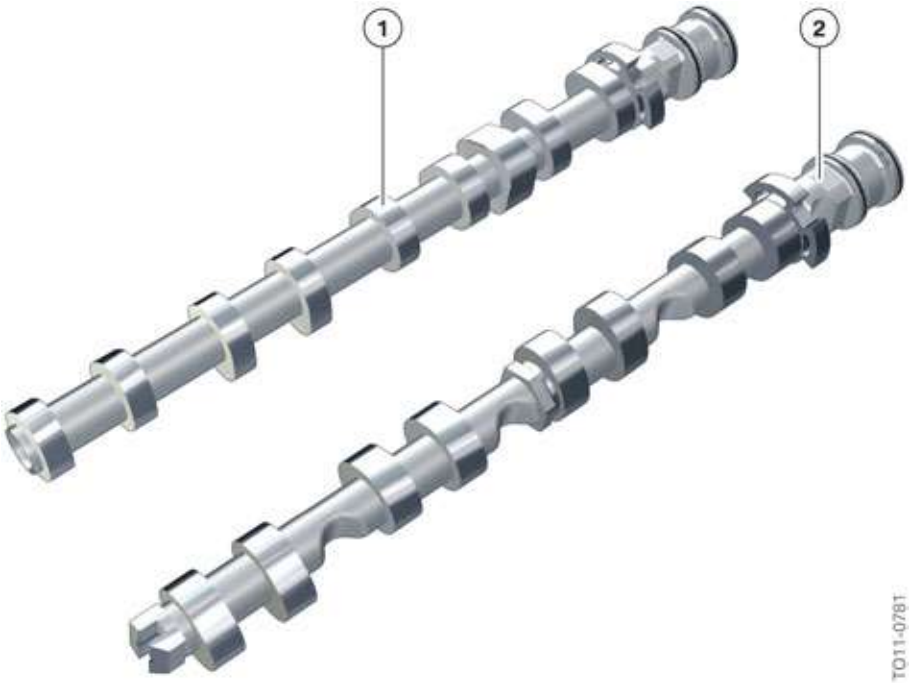

N63TU, assembled camshafts

Index	Explanation
1	Exhaust camshaft
2	Intake camshaft

cardiagn.com

N63TU Engine

2. Engine Components

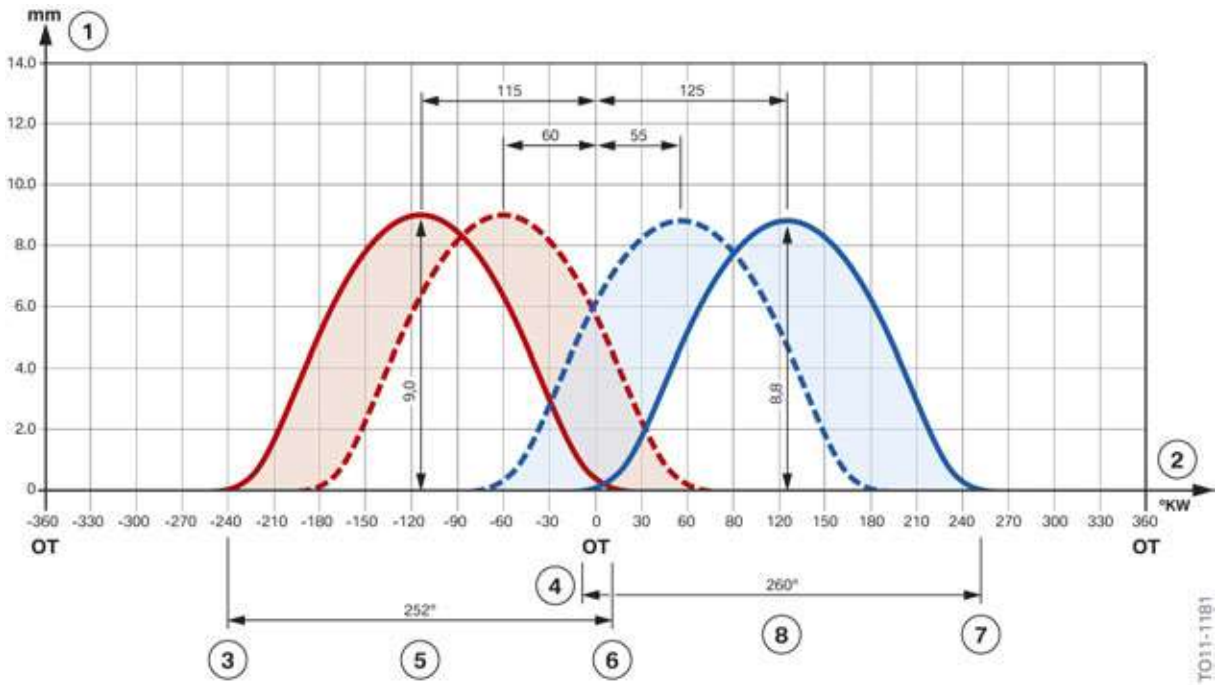

N63TU, cam/valve timing diagram

Index	Explanation
1	Valve lift [mm]
2	Crankshaft degrees [°KW]
3	Exhaust valve open
4	Intake valve open
5	Opening period of exhaust valve
6	Exhaust valve closes
7	Intake valve closes
8	Opening period of intake valve

Technical data of the valvetrain

		N63B44O0	N63B44O1
Intake valve diameter / Shaft diameter	[mm]	33.0/6	33.2/6
Exhaust valve diameter / Shaft diameter	[mm]	29/6	29/6
Maximum valve lift, intake / exhaust valve	[mm]	8.8/9.0	8.8/9.0
VANOS adjustment range, intake (camshaft spread)	[crankshaft degrees]	50	70
VANOS adjustment range, exhaust (camshaft spread)	[crankshaft degrees]	50	55

cardiagn.com

Intake camshaft opening angle (max.-min. spread)	[crankshaft degrees]	70 – 120	55 – 125
Exhaust camshaft opening angle (max.-min. spread)	[crankshaft degrees]	64 – 114 (cylinders 2,4,7,8) 70 - 120 (cylinders 1,3,5,6)	60 – 115
Opening period, intake camshaft	[crankshaft degrees]	231	260
Opening period, exhaust camshaft	[crankshaft degrees]	215 (cylinders 2,4,7,8) 231 (cylinders 1,3,5,6)	252

Intake and exhaust valves

The intake and exhaust valves both have a shaft diameter of 6 mm. The exhaust valves are hollow and filled with Sodium. This results in improved and quicker heat dissipation.

2.4.2. Valvetronic

The Valvetronic is comprised of fully variable valve lift control and variable camshaft timing control (double VANOS), which makes the closing time of the intake valve freely selectable.

As with pervious Valvetronic engines valve lift control is performed on the intake side, while camshaft control is performed on both the intake and exhaust sides.

Throttle-free load control is only possible if:

- the valve lift of the intake valve and
- the camshaft adjustment of the intake and exhaust camshafts are variably controllable.

Result:

The opening and closing times and thus the opening period and the lift of the intake valve are selectable freely.

VANOS

The VANOS (variable camshaft timing control) components known from the N55 engine are used.

In the process:

- The adjustment range of the VANOS was increased from 50° to 70° through the use of four flanks instead of five
- The weight was reduced from 1050 g to 650 g (37 to 22.3 oz) through the use of aluminium instead of steel.

cardiagn.com

N63TU Engine
2. Engine Components

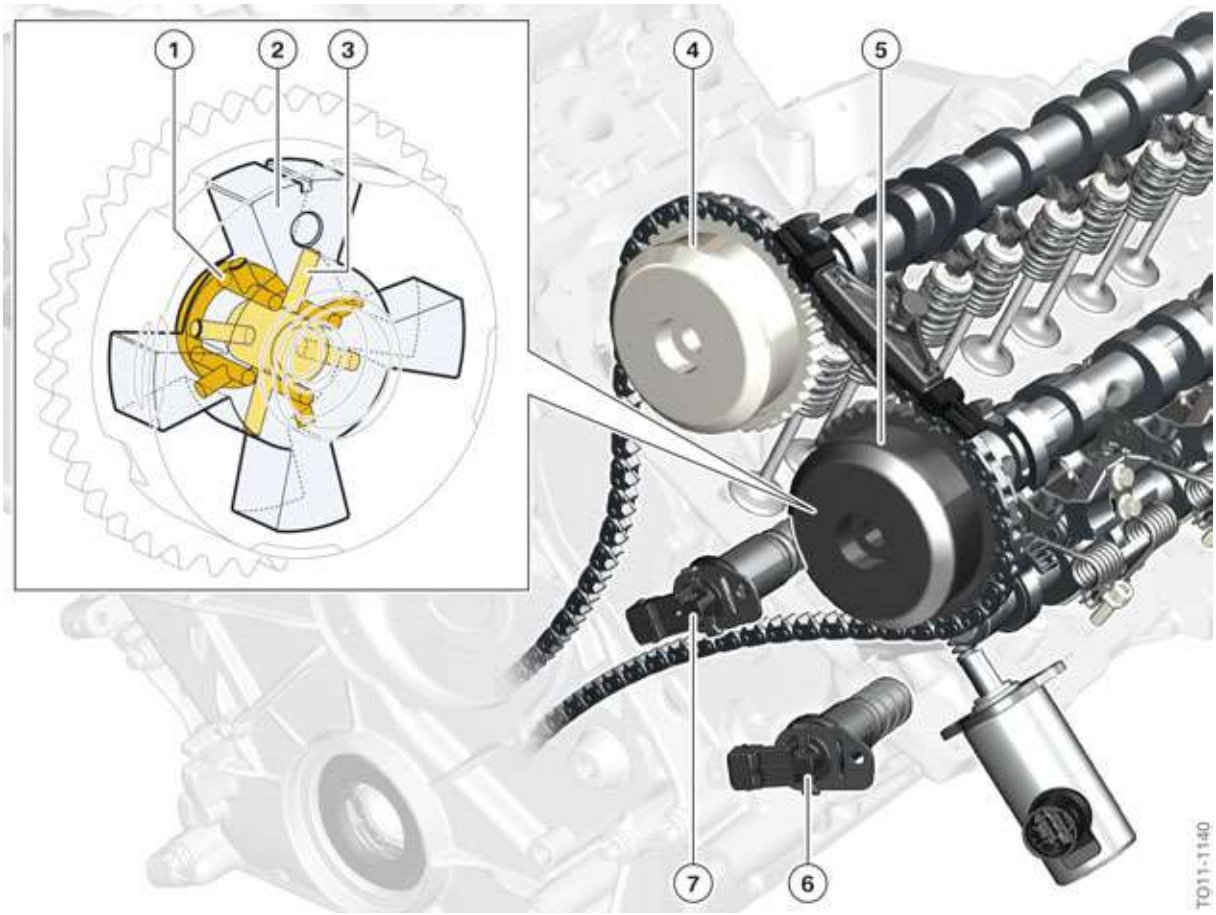

N63TU, VANOS with oil supply

Index	Explanation
1	Oil duct for timing advance
2	Rotor
3	Oil duct for timing retardation
4	VANOS, exhaust side
5	VANOS, intake side
6	VANOS solenoid valve, intake side
7	VANOS solenoid valve, exhaust side

Valve lift control

As can be seen in the following diagram, the Valvetronic servomotor is attached at the intake side to the cylinder head. The eccentric shaft sensor is integrated into the Valvetronic servomotor.

The system uses Valvetronic III, which was introduced in the N55 engine.

The roller cam follower of the intake side and the intermediate lever are made from sheet metal and divided into various classes. This can be seen on the punched-on numbers.

cardiagn.com

N63TU Engine
2. Engine Components

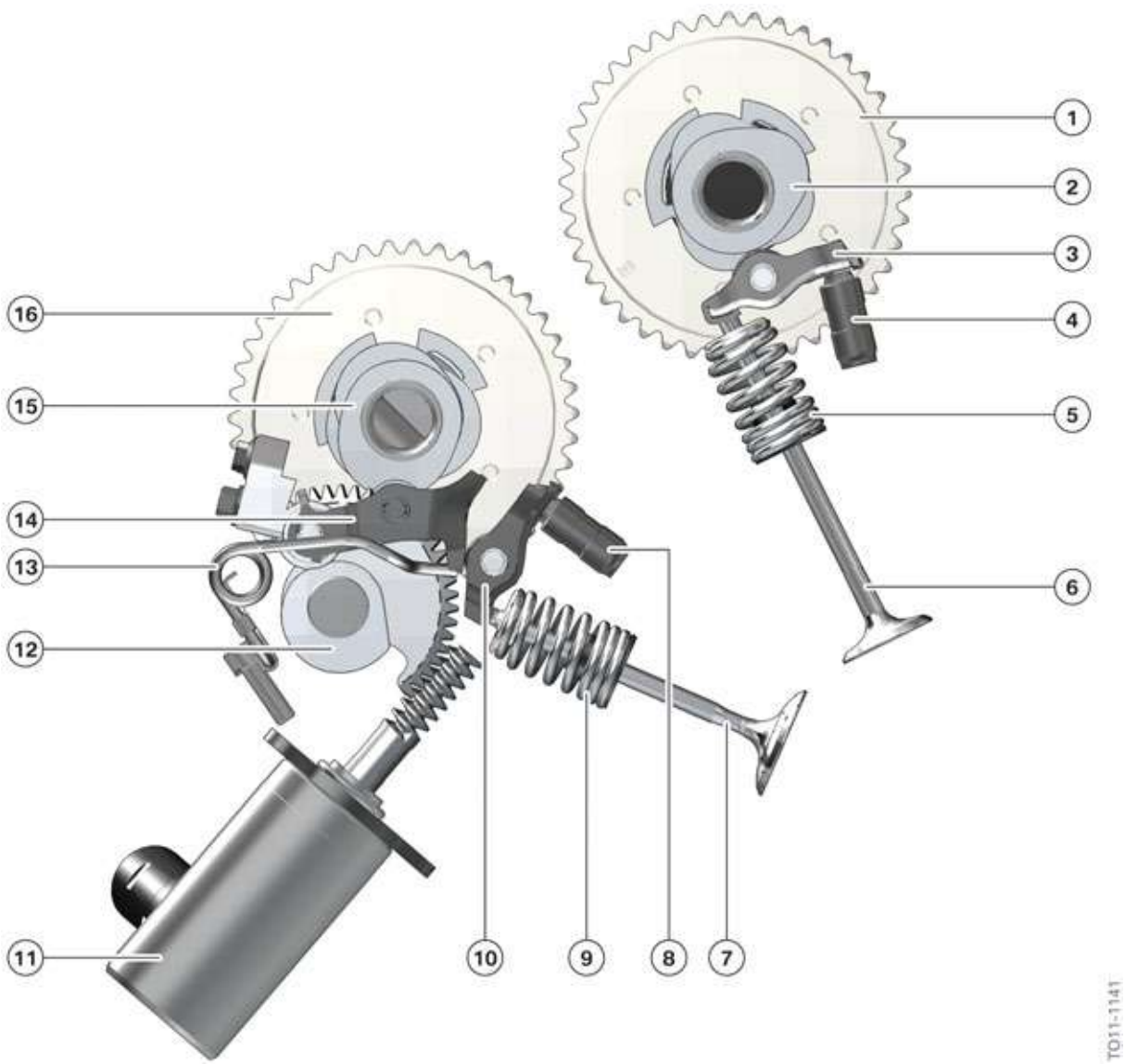

N63TU, valve lift control

Index	Explanation
1	VANOS, exhaust side
2	Exhaust camshaft
3	Roller cam follower
4	Hydraulic valve clearance compensation (HVCC)
5	Valve spring on exhaust side
6	Exhaust valve
7	Intake valve
8	Hydraulic valve clearance compensation (HVCC)
9	Valve spring on intake side

cardiagn.com

Index	Explanation
10	Roller cam follower
11	Valvetronic servomotor
12	Eccentric shaft
13	Spring
14	Intermediate lever
15	Intake camshaft
16	VANOS, intake side

2.5. Belt drive

The belt drive from the N63 engine is used and remains unchanged.

The belt drive includes a main belt drive with an alternator, coolant pump and power steering pump. The main belt drive is operated with a tensioning pulley with torsion spring tensioner.

The secondary belt drive includes the air conditioning compressor and is equipped with an elastic belt. The revolver tensioning system known from the N63 engine is used for replacing the elastic belt.

cardiagn.com

N63TU Engine
2. Engine Components

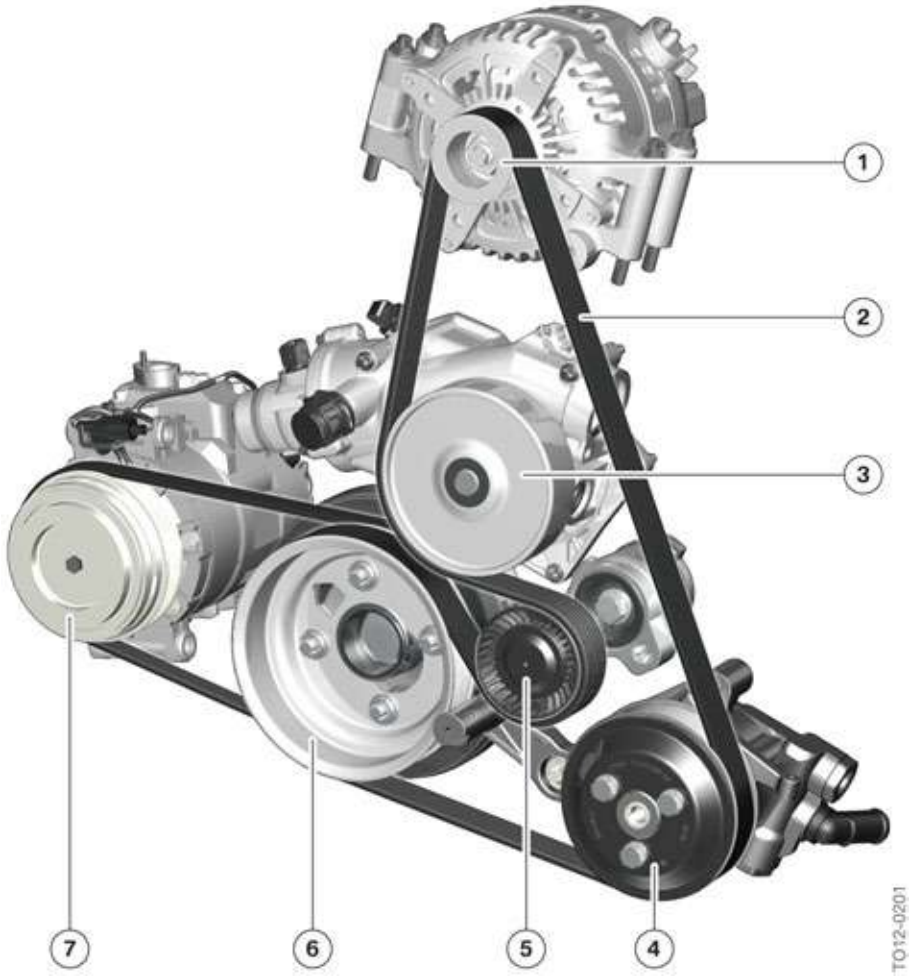

N63TU, belt drive

Index	Explanation
1	Belt pulley, alternator
2	Belt
3	Belt pulley, coolant pump
4	Belt pulley, power steering pump
5	Belt tensioner
6	Belt pulley, crankshaft
7	Belt pulley, A/C compressor

cardiagn.com

N63TU Engine

3. Oil Supply

3.1. Overview

The following graphics provide an overview of the oil supply and show the hydraulic circuit diagram and the actual layout of the oil passages in the engine.

3.1.1. Hydraulic circuit diagram

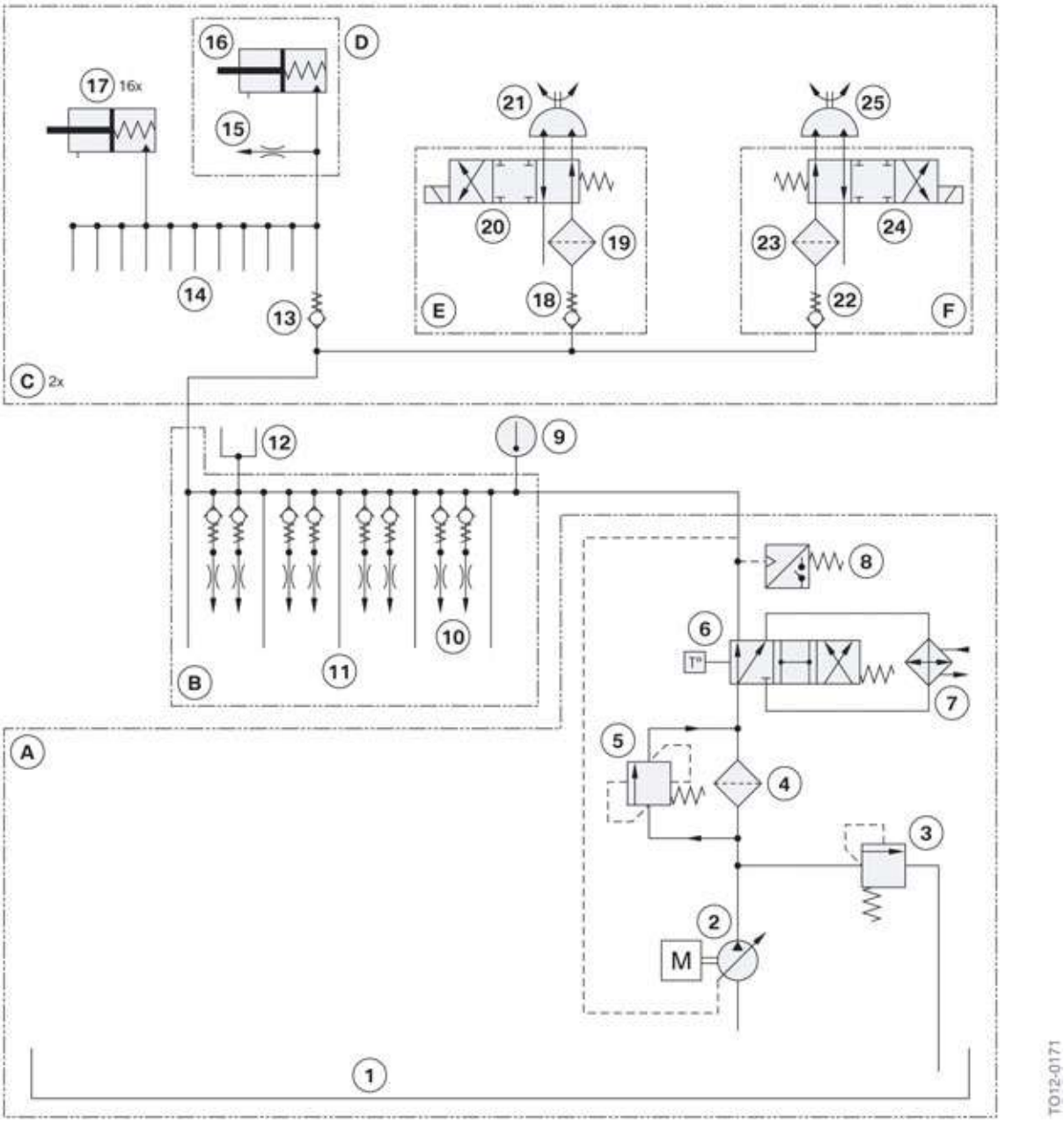

N63TU, hydraulic circuit diagram

cardiagn.com

N63TU Engine

3. Oil Supply

Index	Explanation
A	Oil sump
B	Crankcase
C	Cylinder head 2 x
D	Chain tensioner
E	VANOS valve, intake
F	VANOS valve, exhaust
1	Oil sump
2	Volume-controlled pendulum slide cell pump
3	Pressure limiting valve
4	Oil filter
5	Filter bypass valve
6	Thermostat
7	Oil cooler (oil-air heat exchanger)
8	Oil pressure switch
9	Oil temperature sensor
10	Oil spray nozzles for piston crown cooling
11	Lubrication point on crankshaft main bearing
12	Lubrication points on exhaust turbocharger
13	Non-return valve, cylinder head
14	Lubrication points on camshaft bearing
15	Oil spray nozzle for timing chain
16	Chain tensioner
17	Hydraulic valve clearance compensating elements (16 x)
18	Non-return valve
19	Strainer
20	VANOS solenoid valve
21	Swivel motor
22	Non-return valve
23	Strainer
24	VANOS solenoid valve
25	Swivel motor

cardiagn.com

3.2. Oil pump and pressure regulation

The N63TU engine is equipped with a volume-flow-controlled oil pump. It is driven via a chain by the crankshaft. It is a pendulum slide cell pump whose controller functions similar to the N63 engine. The width of the housing was reduced by 6 mm and only has an overall width of 40 mm. The function is the same as the existing pendulum slide cell pump. The intake snorkel is positioned deep in the rear area of the oil sump to guarantee an adequate oil supply.

Information on the operating principle of a volume-flow-controlled oil pump can be found in the ST501 Engine Technology "N63 Engine" training material available on TIS and ICP.

3.2.1. Oil pump

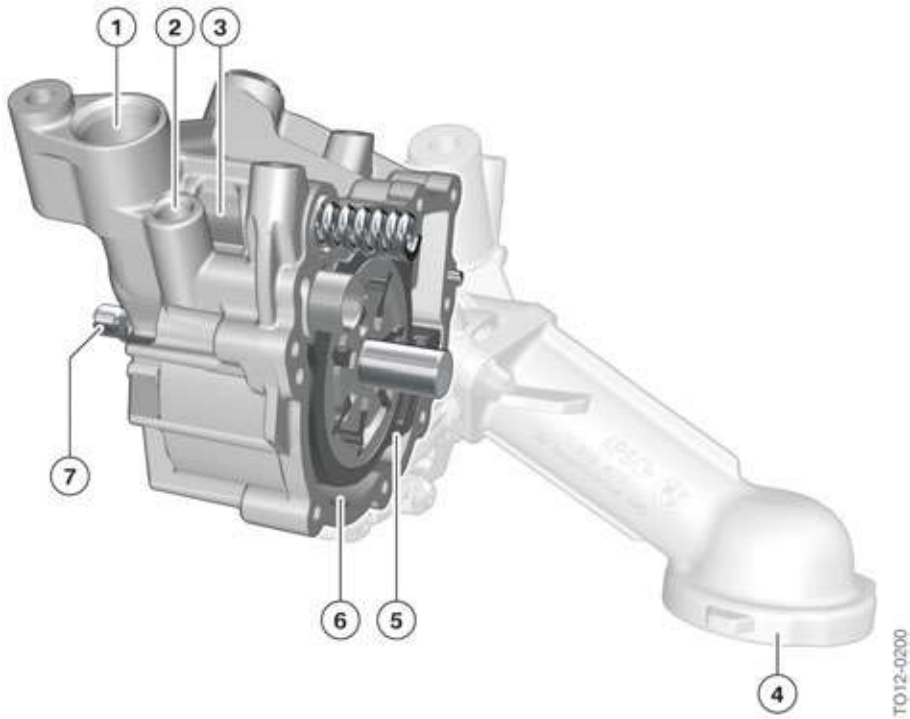

N63TU, oil pump with counterbalance shafts

Index	Explanation
1	Oil pump outlet
2	Oil return to the oil chamber
3	Pressure limiting valve (maximum 18 bar)
4	Intake pipe
5	Pendulum slide with a width of 40 mm
6	Oil chamber for pendulum slide
7	Drive for oil pump shaft

cardiagn.com

N63TU Engine

3. Oil Supply

3.3. Oil cooling and filtering

The N63TU engine uses the full-flow oil filter familiar from the N63 engine. It is bolted onto the oil sump from below. The oil drain plug is not used in the oil filter cover. A filter bypass valve is integrated into the oil filter housing.

N63TU, oil filter module

cardiagn.com

Index	Explanation
1	Thermostat
2	Connection for engine oil cooler
3	Engine oil cooler

3.3.1. Oil cooling

The N63TU engine has an air to coolant heat exchanger for cooling the engine oil which is attached below the cooling module. To ensure quick heating-up of the engine oil, a thermostat is integrated in the oil sump. The thermostat releases the supply to the oil cooler from an engine oil temperature of 100 °C (212 °F).

3.3.2. Oil filtering

As with all BMW engines, the N63TU has a filter bypass valve which can open a bypass round the filter if, for example, the engine oil is cold and viscous. This occurs if the pressure difference between before and after the filter exceeds 2.5 bar (36.25 psi). The permissible pressure difference has been increased from 2.0 to 2.5 bar (29 to 36.25 psi) in order to protect the lead-free crankshaft and connecting rod bearings. This ensures that the filter is bypassed much less frequently and any dirt particles are reliably filtered out. The filter bypass valve is integrated into the oil filter housing.

3.4. Oil monitoring

3.4.1. Oil level

The familiar oil level sensor is used which is already installed in the N20 and N55 engines with BN 2020 vehicle electrical system.

3.5. Oil spray nozzles

As with previous engines components which cannot be reached directly by an oil duct are lubricated and/or cooled by oil spray nozzles.

3.5.1. Piston crown cooling

The oil spray nozzles for piston crown cooling are similar to the N63 engine in principle. They incorporate a non-return valve to enable them to open and close only from a specific oil pressure. Each cylinder has its own oil spray nozzle, which obtains the correct installation position through its styling. In addition to the piston crown cooling, these are also responsible for the lubrication of the piston wrist pins.

cardiagn.com

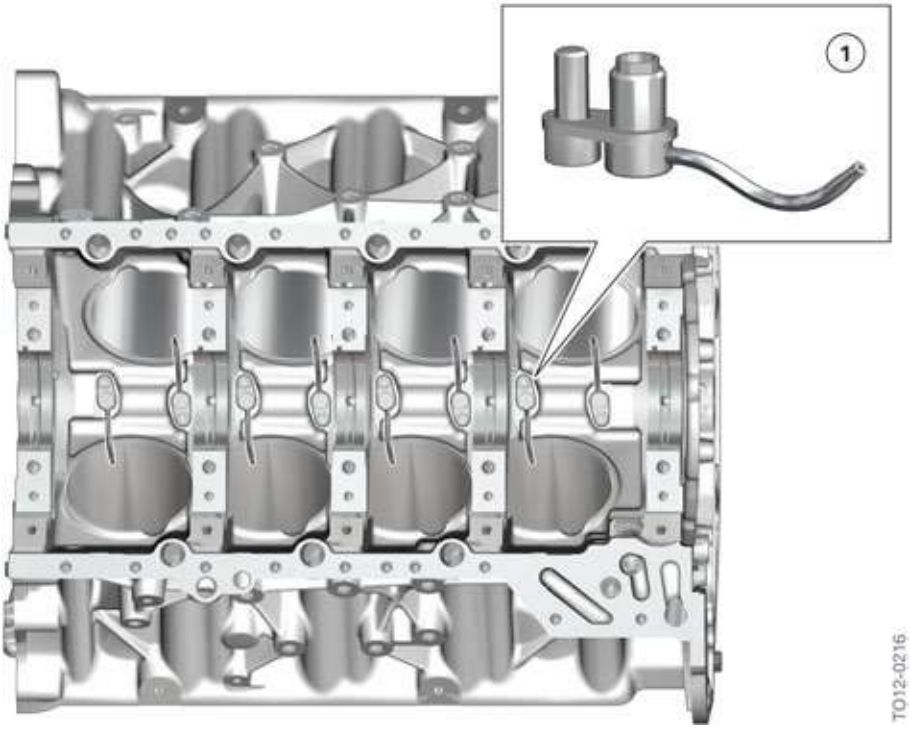

N63TU, oil spray nozzles for the piston crown cooling

Index	Explanation
1	Oil spray nozzle

Opening pressure	2.25 - 2.65 bar (32.6 - 38.4 psi)
Closing pressure	2.0 bar (29 psi)

3.5.2. Chain drive

The chain drive in the N63TU engine is divided into an upper section for the camshaft drive and a lower section for the oil pump drive.

Camshaft drive

The oil spray nozzles for lubricating the timing chains are integrated into the respective chain tensioner of the banks. They spray the oil directly onto the timing chain. A throttle in the oil spray nozzle limits the emerging oil. The timing chain of the camshaft drive is designed as a toothed roller-type chain.

cardiagn.com

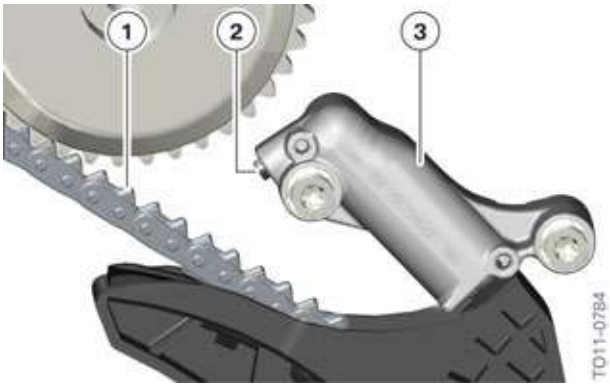

N63TU, chain tensioner with oil spray nozzle for timing chain

Index	Explanation
1	Toothed roller-type chain with 142 elements
2	Oil spray nozzle
3	Chain tensioner

Oil pump drive

The oil pump is driven via a roller-type chain by the crankshaft. The roller-type chain is kept tensioned by a tensioning rail. The secondary drive is lubricated via the oil sump.

3.5.3. Camshaft

The oil supply of the chain tensioner, the hydraulic valve clearance compensating elements and the bearing positions in the cylinder head is done via a rising pipe from the engine housing in the cylinder head. A non-return valve in the cylinder head in the rising pipe prevents the oil duct idling.

3.5.4. Valvetronic servomotor

The worm gear for adjusting the eccentric shaft is lubricated using the oil spray from the camshaft.

cardiagn.com

N63TU Engine

4. Cooling

The cooling system also shares similarities with the N63 engine. The engine and charge air cooling both have separate cooling systems. The cooling circuit for both Digital Engine Electronics control units was integrated into the charge air cooling system.

4.1. System overview

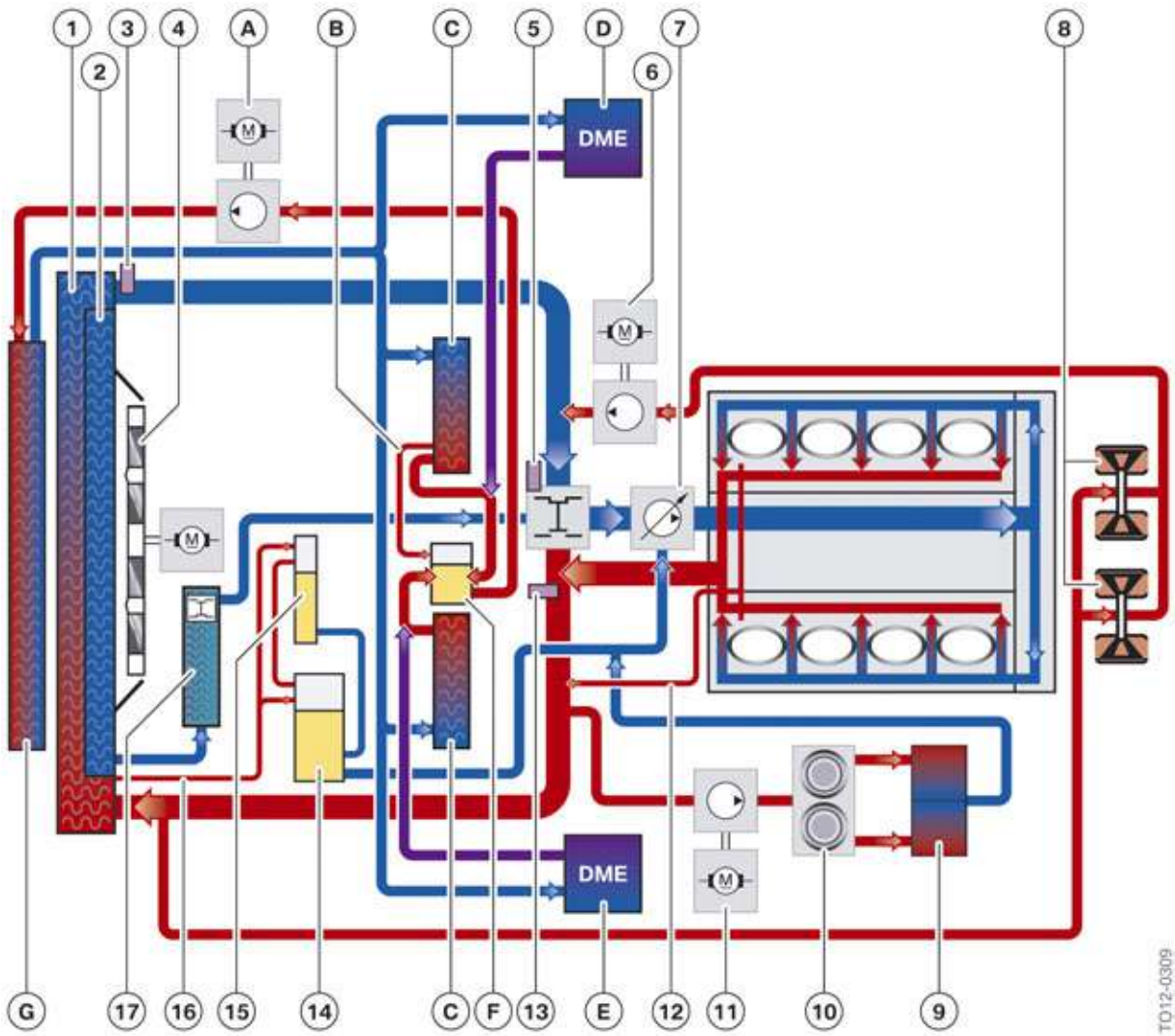

N63TU, complete cooling system

Index	Explanation
A	Electric coolant pump for the cooling circuit of the charge air and DME
B	Vent line for charge air cooling
C	Charge air cooler
D	Digital Engine Electronics (DME 1)
E	Digital Engine Electronics (DME 2)

cardiagn.com

Index	Explanation
F	Expansion tank
G	Cross-flow cooler for the cooling circuit of charge air and DME
1	Radiator
2	Radiator for the transmission oil cooling
3	Coolant temperature sensor at radiator outlet
4	Electric fan
5	Map thermostat with heating element
6	Electric auxiliary water pump for exhaust turbocharger cooling
7	Temperature-dependent coolant pump
8	Exhaust turbocharger
9	Heater core
10	Duo heater control valve
11	Electric auxiliary water pump for vehicle heating
12	Vent line for banks
13	Coolant temperature sensor at engine outlet
14	Expansion tank
15	Coolant filler pipe
16	Vent line for cooling circuit, engine
17	Transmission oil-to-coolant heat exchanger

4.1.1. Engine cooling circuit

The engine cooling is realized via a conventional coolant pump with a map thermostat. The impeller has a diameter of 70 mm.

An auxiliary radiator is connected to the cooling circuit in the direction of travel on the left. The additional radiator is equipped with a non-return valve with compression spring to prevent a return by the electric auxiliary water pump in the case of a low volumetric flow of the coolant.

The electric fan has a nominal power of 850 W.

The following graphics show the installation locations and layout of the components.

cardiagn.com

N63TU Engine

4. Cooling

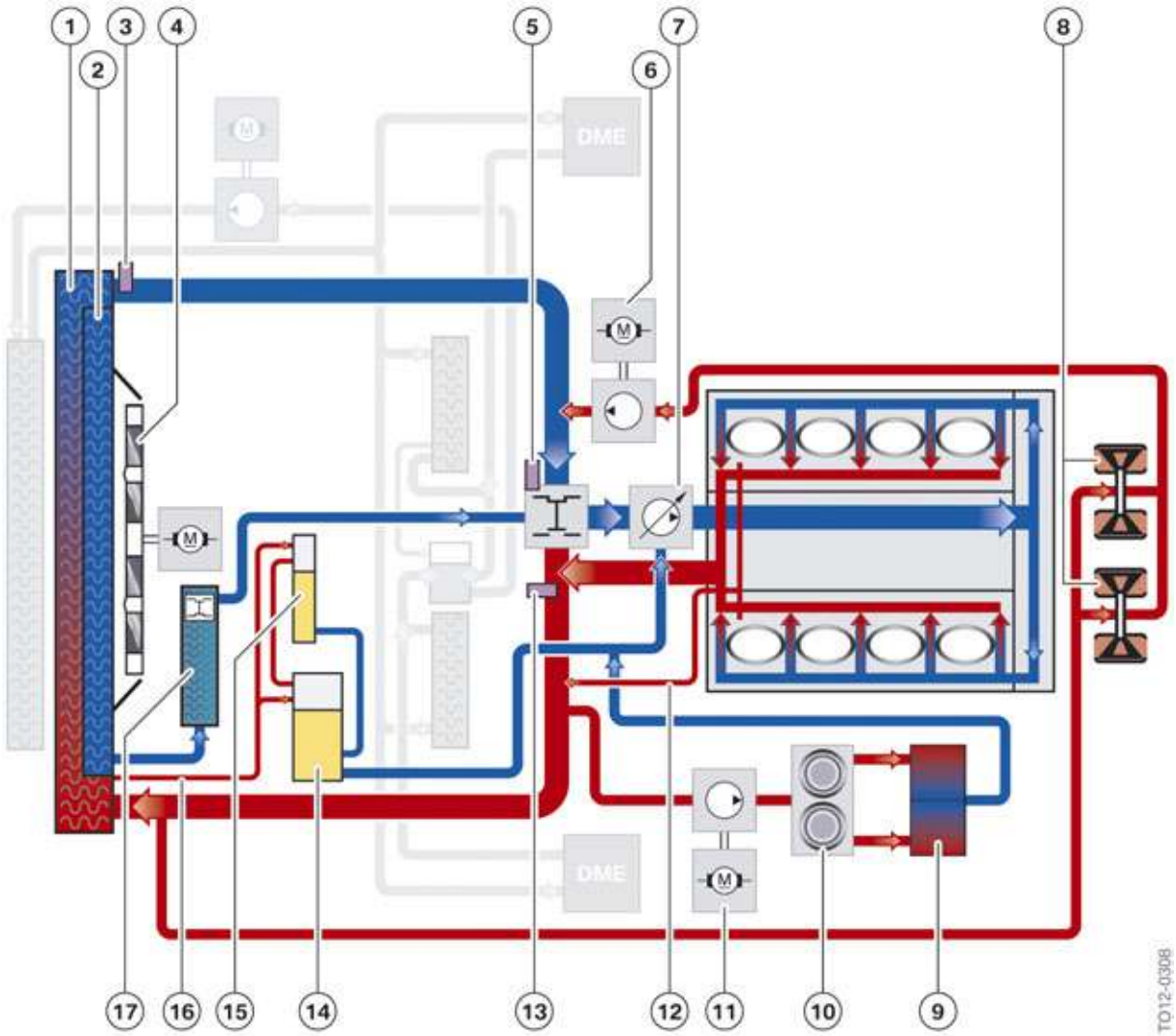

N63TU engine cooling circuit

Index	Explanation
1	Radiator
2	Radiator for the transmission oil cooling
3	Coolant temperature sensor at radiator outlet
4	Electric fan
5	Map thermostat with heating element
6	Electric auxiliary water pump for exhaust turbocharger cooling
7	Temperature- and speed-dependent coolant pump
8	Exhaust turbocharger
9	Heater core
10	Duo heater control valve

cardiagn.com

4. Cooling

Index	Explanation
11	Electric auxiliary water pump for vehicle heating
12	Vent line for banks
13	Coolant temperature sensor at engine outlet
14	Expansion tank
15	Coolant filler pipe
16	Vent line for cooling circuit, engine
17	Transmission oil-to-coolant heat exchanger

cardiagn.com

N63TU Engine

4. Cooling

Components of the engine cooling circuit (without the turbocharger cooling circuit shown)

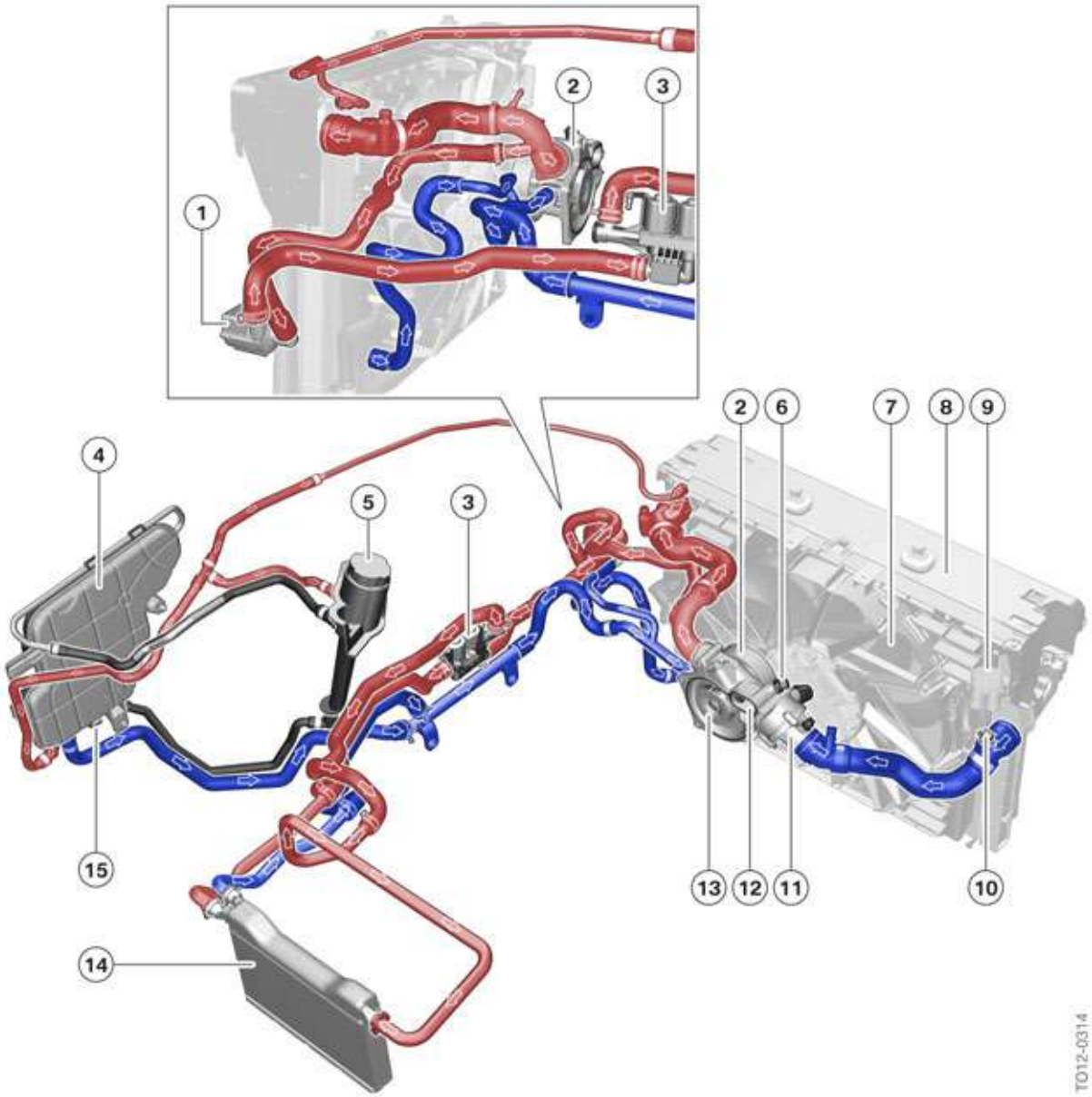

N63TU engine cooling system components shown without turbocharger cooling circuit

Index	Explanation
1	Electric auxiliary water pump
2	Coolant pump
3	Duo heater control valve
4	Expansion tank
5	Filling cup
6	Coolant temperature sensor at engine outlet

cardiagn.com

Index	Explanation
7	Electric fan
8	Radiator
9	Plug connection for electric fan
10	Coolant temperature sensor at radiator outlet
11	Map thermostat
12	Return of heated coolant from engine housing to coolant pump
13	Supply of cooled coolant via impeller to the engine housing
14	Heater core
15	Coolant level sensor

Components of turbocharger cooling circuit

The mechanical coolant pump is driven via a belt and cannot be used for cooling the exhaust turbocharger after the engine has shut down. Therefore there is a 20 W electric coolant pump to feed coolant through this separate cooling circuit. The electric coolant pump is switched on also during engine operation depending on the coolant temperature at the engine outlet.

The after-run of the electric coolant pump can last up to 30 minutes for a stationary engine and when the ignition is turned off.

This is calculated according to the following values:

- Engine oil temperature
- Injected fuel quantity
- Intake air temperature
- Exhaust-gas temperature
- Fuel temperature.

The electric fan can also run for a maximum of 11 minutes after the engine is turned off.

cardiagn.com

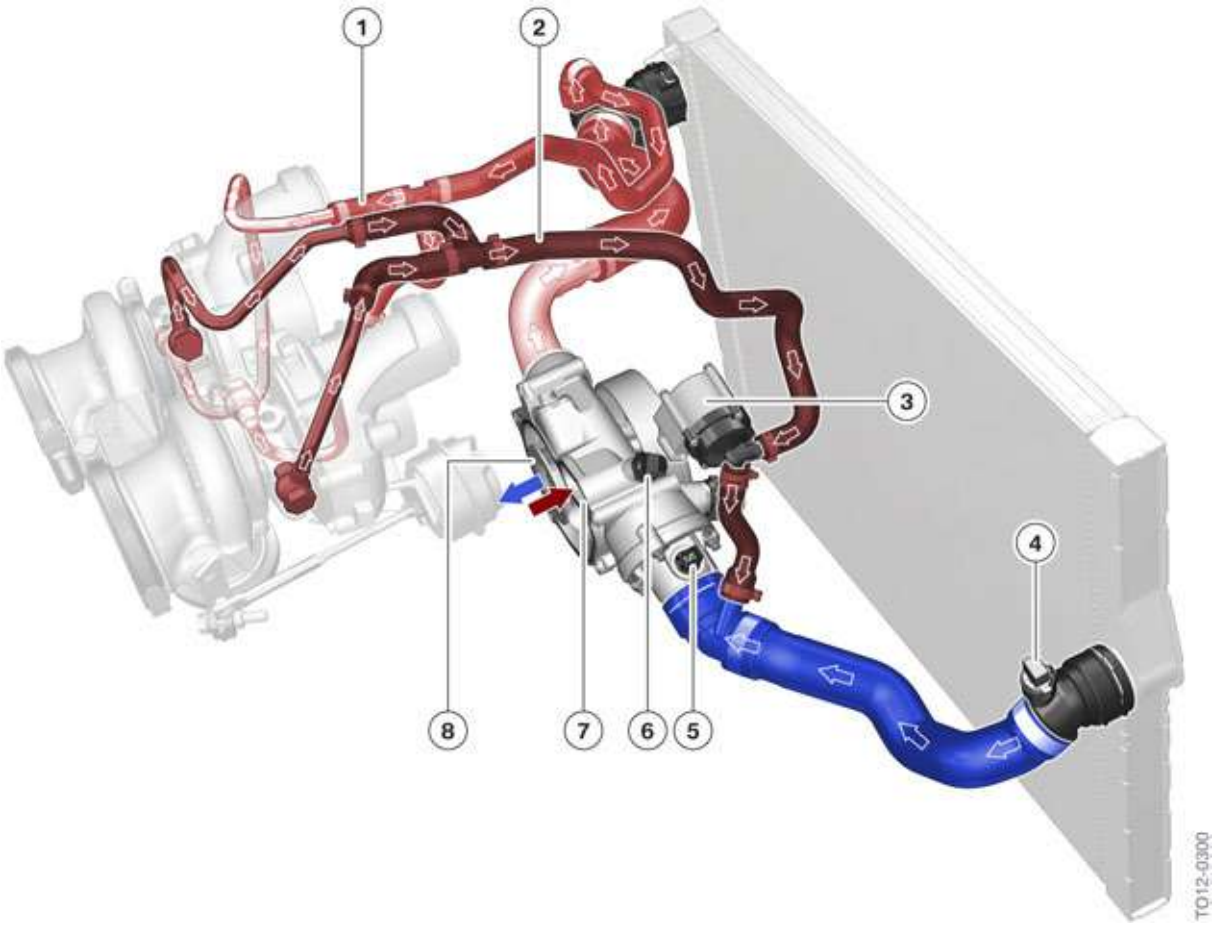

N63TU, turbocharger cooling circuit with electric auxiliary water pump

Index	Explanation
1	Supply line to the exhaust turbochargers
2	Return line from the exhaust turbochargers to the auxiliary water pump
3	Electric auxiliary water pump
4	Coolant temperature sensor at radiator outlet
5	Map thermostat
6	Coolant temperature sensor at engine outlet
7	Return of the heated coolant from the engine housing to the coolant pump housing
8	Supply of the cooled coolant to the engine housing

4.1.2. Charge air coolers and DME cooling circuit

An independent cooling system with an electric coolant pump is used for the cooling circuit of the charge air cooler and DME control units. The cooling circuit for the charge air cooling and the Digital Engine Electronics (DME) contains a cross-flow radiator and two auxiliary radiators.

cardiagn.com

N63TU Engine
4. Cooling

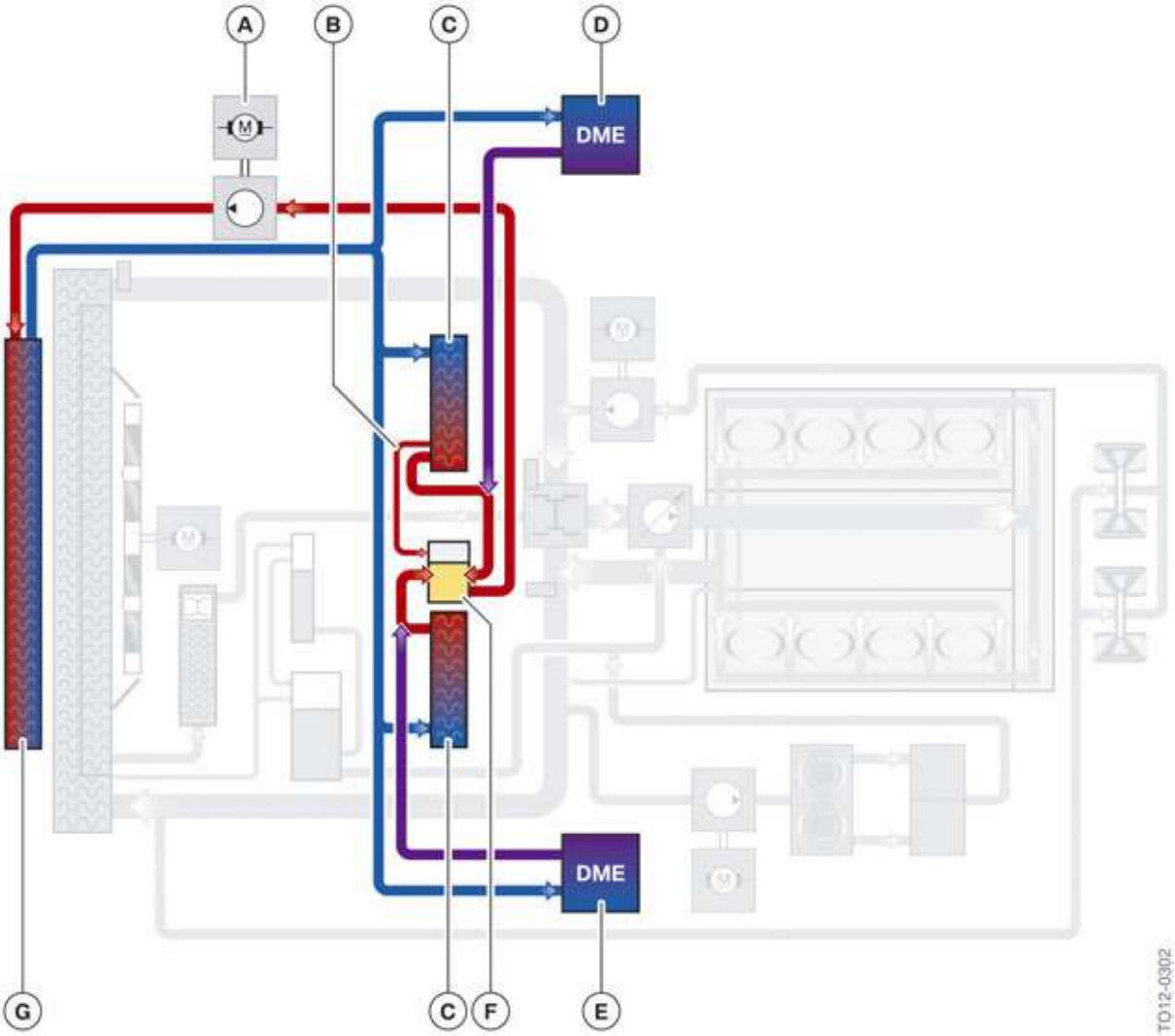

N63TU charge air cooling and DME cooling circuit

Index	Explanation
A	Electric coolant pump for the charge air coolers and DME cooling circuit
B	Vent line for charge air cooling
C	Charge air coolers
D	Digital Engine Electronics (DME 1)
E	Digital Engine Electronics (DME 2)
F	Expansion tank
G	Cross-flow heat exchanger for the charge air coolers and DME cooling circuit

cardiagn.com

N63TU Engine

4. Cooling

Components of the charge air cooling and DME cooling circuit

The 50 W pump has a self-diagnosis and dry-run protection. If the engine speed is increased by 15 minutes over a period, the auxiliary water pumps are switched off and a fault code is stored in the DME. The expansion tank does not have a coolant level sensor and does not automatically detect when the fluid level is too low.

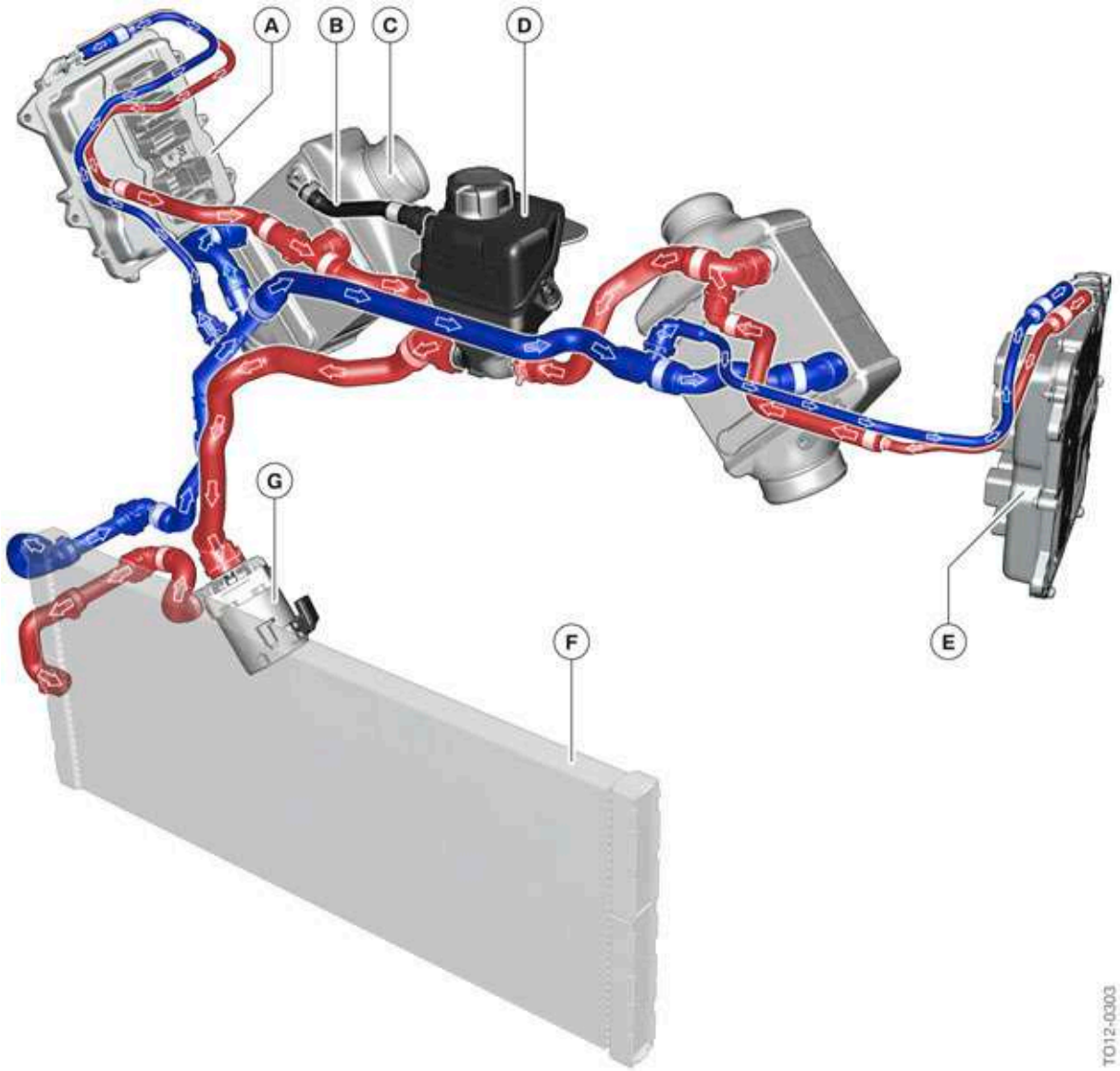

N63TU components of the charge air coolers and DME cooling circuit

cardiagn.com

Index	Explanation
A	Digital Engine Electronics (DME 1)
B	Ventilation line for charge air cooling
C	Charge air cooler
D	Expansion tank
E	Digital Engine Electronics (DME 2)
F	Cross-flow heat exchanger for the charge air coolers and DME cooling circuit
G	Electric coolant pump for the charge air coolers and DME cooling circuit

4.2. Heat management

The N63TU engine has the same heat management functions in the Digital Engine Electronics (DME) as in the N55 engine. This comprises independent control of the electric cooling components of electric fan, map thermostat and coolant pumps.

4.2.1. Auxiliary water pump

The N63TU engine also has three electric auxiliary water pumps in addition to the mechanical coolant pump:

- for heating the interior
- for cooling the exhaust turbocharger
- for cooling the charge air cooler and the two DME control units.

The electric coolant pump for the cooling circuit of the charge air and DMEs has a power of 50 W. The other two pumps have a 20 W power rating.

If the coolant pump is removed and then to be reused, it is important to ensure that it is set down still filled with coolant. Drying out the pump may cause the bearings to stick in position. This will cause the coolant pump not to start, which in turn may result in engine damage.

Before installing, turn the impeller manually to ensure that it moves freely.

4.2.2. Map thermostat

The N63TU engine is fitted with a conventional map thermostat which has the following technical data in non-electrically controlled mode:

- Opening start at 105 °C (221 °F)
- Complete opening at 120 °C (248 °F).

In addition, an electric heater in the map thermostats can be used to make the thermostat open at a lower coolant temperature.

cardiagn.com

N63TU Engine

5. Intake/Exhaust Emission System

The intake and exhaust emission systems are in principle comparable with those in the N63 engine.

The list below itemizes the most important changes to the intake and exhaust emission systems:

- Flow-optimized air intake duct with adaptation of the manifold to the new cylinder head cover geometry
- Hot film air mass meter 7
- Adaptation of the intake system with regard to the Valvetronic servomotor attached at the side
- Adaptation of the exhaust system by integration of the pipe elbows in the catalytic converter near the engine and discontinuation of the bolt-on flanges.

5.1. Overview

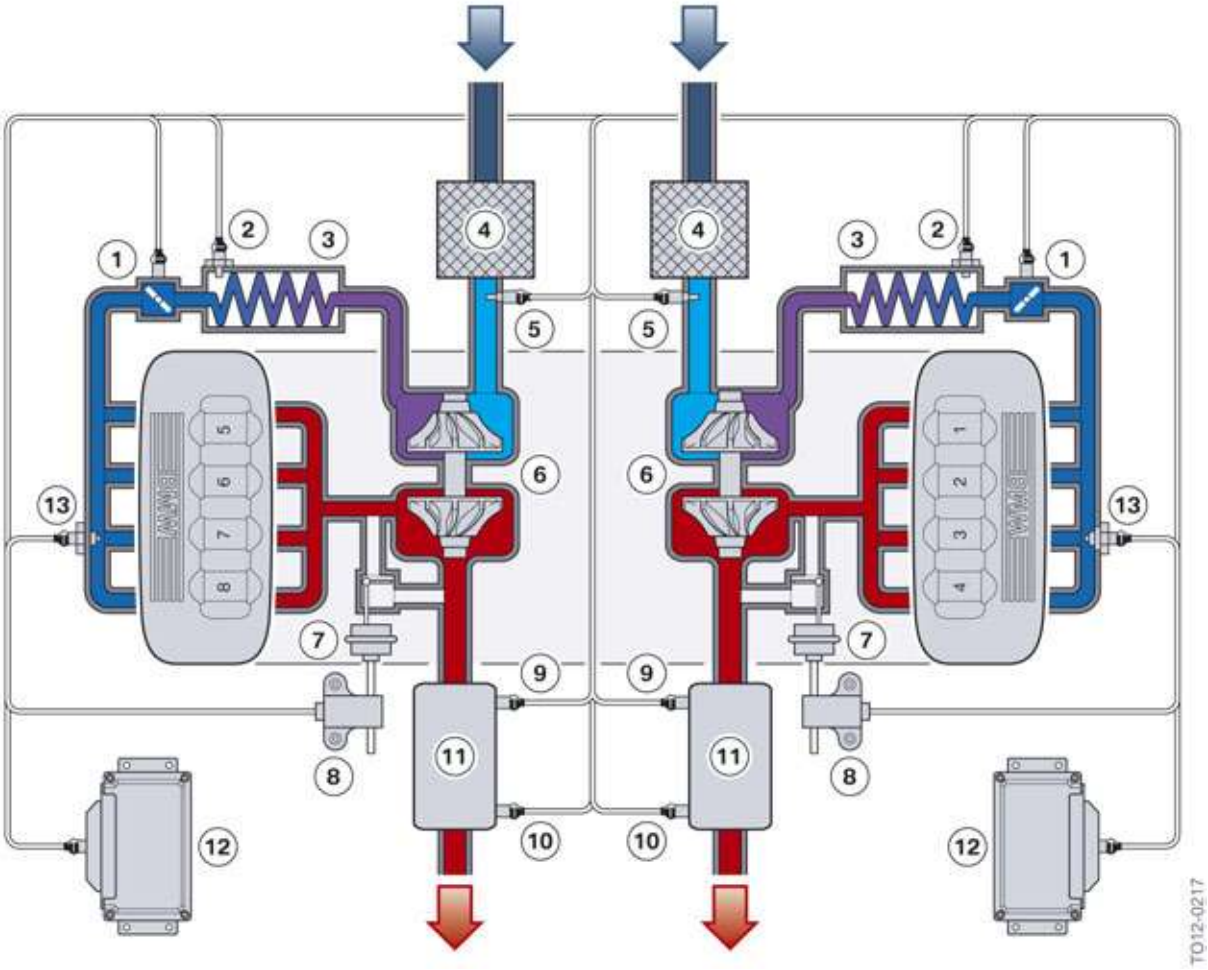

N63TU, air intake and exhaust emission systems

cardiagn.com

N63TU Engine

5. Intake/Exhaust Emission System

Index	Explanation
1	Throttle valve
2	Charging pressure sensor
3	Charge air cooler
4	Intake silencer
5	Hot film air mass meter 7
6	Exhaust turbocharger
7	Wastegate valve
8	Electropneumatic pressure converter
9	Oxygen sensor before catalytic converter, control sensor LSU ADV
10	Oxygen sensor after catalytic converter, monitoring sensor LSF4.2
11	Catalytic converter
12	Digital Engine Electronics (DME)
13	Charge air temperature and intake-manifold pressure sensor

cardiagn.com

5.2. Intake air system

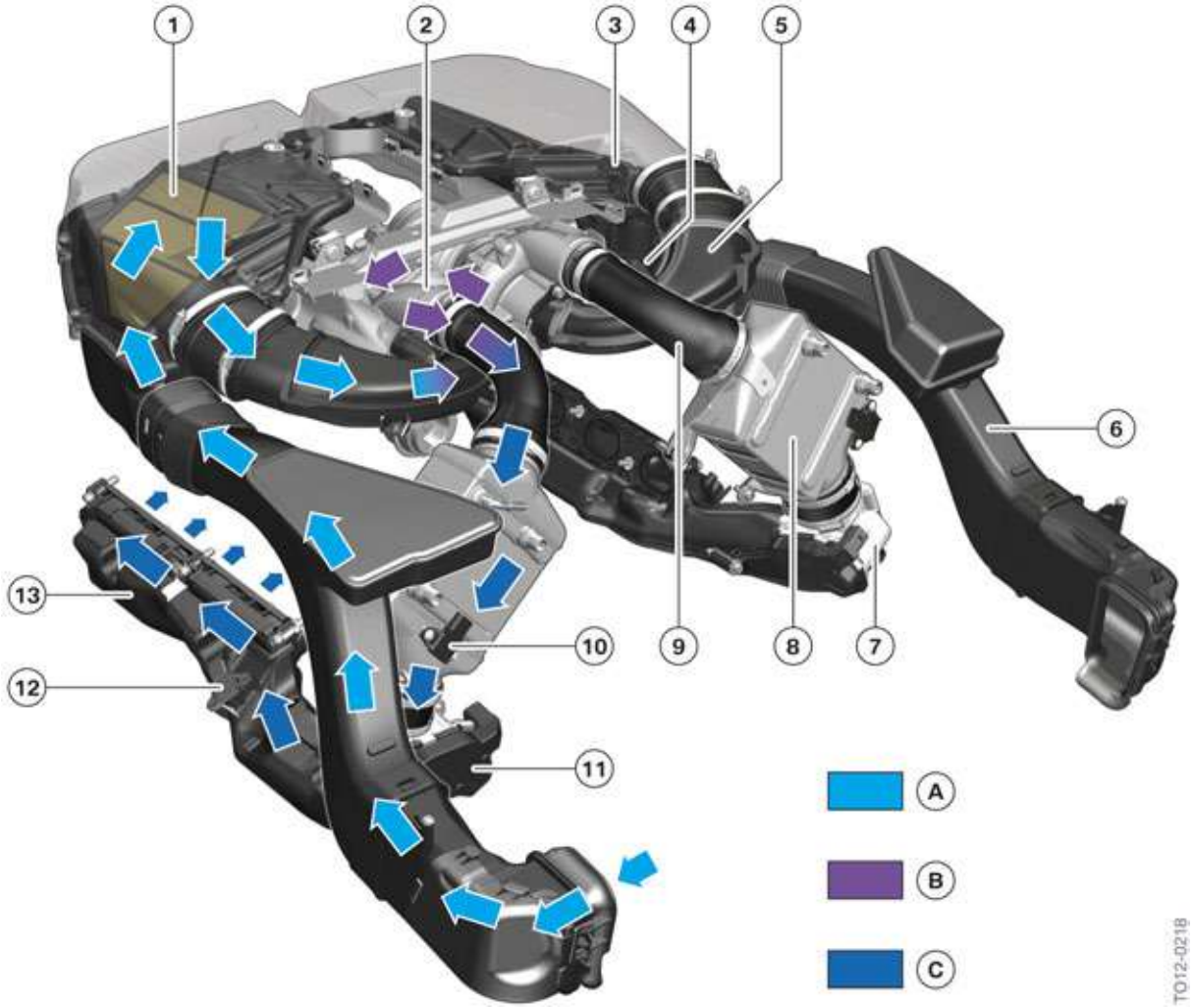

N63TU, air intake system

Index	Explanation
A	Intake air
B	Compressed, heated charge air
C	Cooled charge air
1	Intake silencer
2	Exhaust turbocharger without blow-off valve
3	Hot film air mass meter 7
4	Connection for crankcase ventilation for clean air pipe
5	Clean air pipe
6	Unfiltered air pipe
7	Connection for tank vent valve

cardiagn.com

Index	Explanation
8	Charge air cooler
9	Charge air pipe
10	Charging pressure sensor
11	Throttle valve with servomotor
12	Charge air temperature and intake-manifold pressure sensor
13	Intake manifold

5.2.1. Intake silencer

The N63TU engine has its own intake silencer for each bank. These are fixed in the vehicle and hold the hot film air mass meters.

5.2.2. Hot film air mass meter

The N63TU engine is equipped with the hot film air mass meter 7 which is familiar from the N20 engine.

⚠

Malfunction or disconnection of the hot film air mass meter does not immediately result in emergency engine operation. However, impaired mixture preparation and therefore poor emission values are possible, which is why the emissions warning lamp lights up.

5.2.3. Intake manifold

The volume of the air intake system has been optimized and it has a flow-optimized connection for the throttle body. It also includes the charge air temperature and charging pressure sensor.

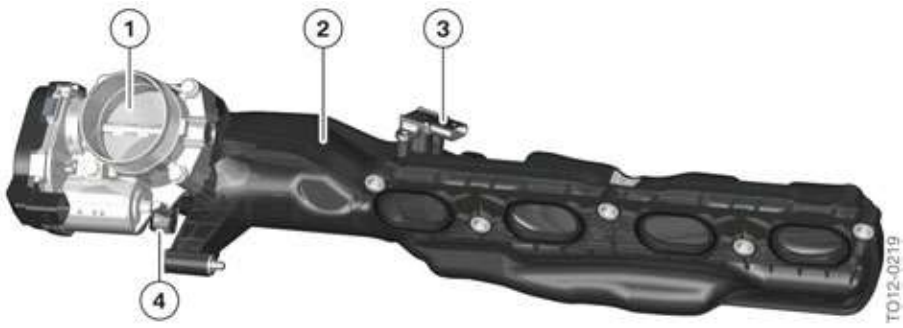

N63TU, intake manifold with throttle valve

cardiagn.com

Index	Explanation
1	Throttle valve
2	Intake manifold
3	Charge air temperature and intake-manifold pressure sensor
4	Connection from tank vent valve

5.3. Exhaust turbocharger

The N63TU engine has two exhaust turbochargers. The compressor was slightly revised and is now equipped with nine blades of the same size. Up to now double blades with five large and five small blades were used. In comparison to previous turbocharged BMW engines the N63TU does not use a blow-off valve. The use of Valvetronic and special tuning and turbo upgrades rendered it unnecessary.

The exhaust turbocharger has the familiar structure with an adapted housing and a wastegate valve.

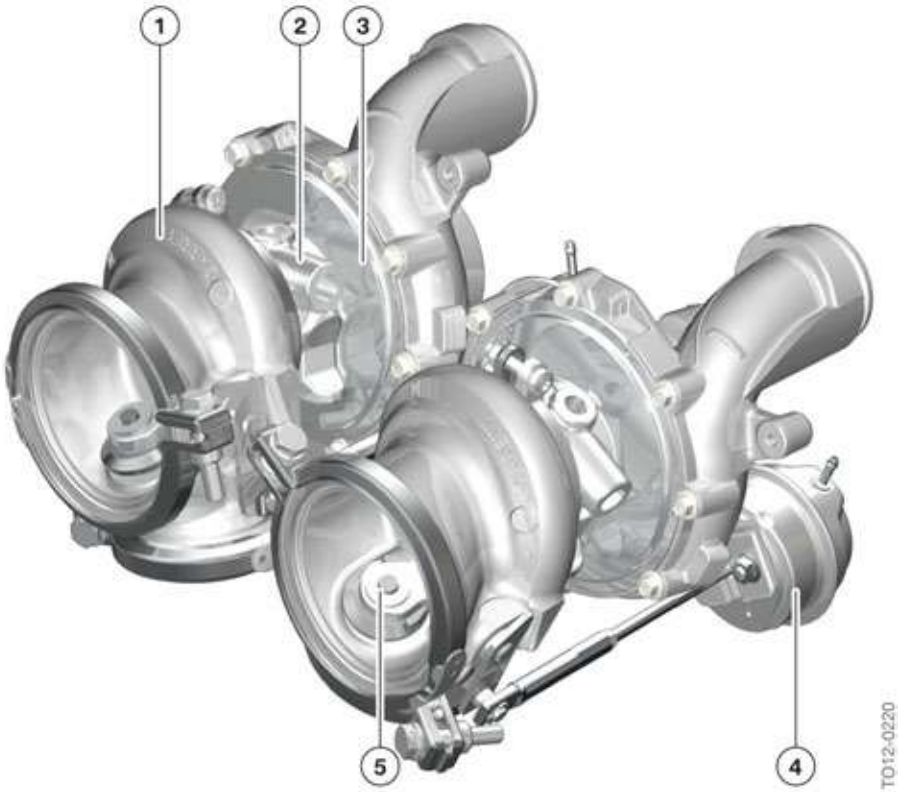

N63TU, exhaust turbochargers

cardiagn.com

Index	Explanation
1	Turbine
2	Bearing seat
3	Compressor
4	Vacuum unit
5	Wastegate valve

Precise alignment of the exhaust turbochargers is necessary for assembly. Always follow proper repair instructions.

5.3.1. Function

The blow-off valves at the exhaust turbocharger are discontinued on this engine as their job is effectively replaced by the engine interventions. This is due to the use of an optimized compressor which permits a more stable pump design in comparison to the predecessor compressor.

Reasons for the installation of a blow-off valve to date were:

- Prevent compressor surge (transition from traction to coasting/overrun mode)
- Possible pumping causes pulsating, acoustic interference noise
- Arising pressure waves as a result which stress the thrust bearing of the turbocharger.

In the case of load shedding without a blow-off valve the aim is to avoid a compressor pump. A pumping compressor arises if high pressure ratios and low mass flows occur. In contrast the engine measures are that through the engine control the target mass flow is increased until the pump limit can fall below the limit and the charging pressure can dissipate. The necessary mass flow is adjusted by activating the throttle valve and valve lift. Excessive cylinder filling and the resulting high torque is then torque-controlled for example reduced via retarding the ignition timing. The results in neutral driveability.

5.4. Exhaust emission system

5.4.1. Exhaust manifold

The cast-iron exhaust manifold of the N63TU engine remains unchanged from its predecessor.

cardiagn.com

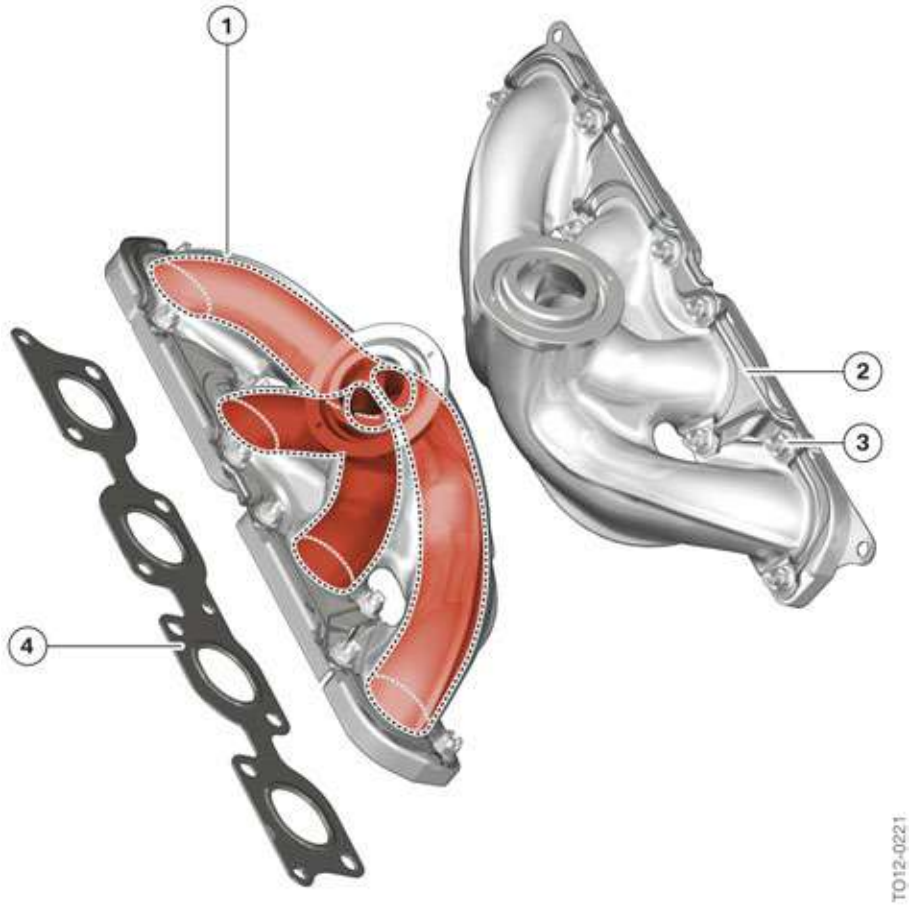

N63TU exhaust manifold

Index	Explanation
1	Exhaust manifold
2	Slide rail
3	Nut
4	Beaded metal gasket

5.4.2. Catalytic converter

The N63TU engine has one catalytic converter per bank. The outlet hoppers are now single-walled. The catalytic converter near the engine comprises first and second monoliths. The catalytic converters have decoupling elements which are also described as expansion elements.

cardiagn.com

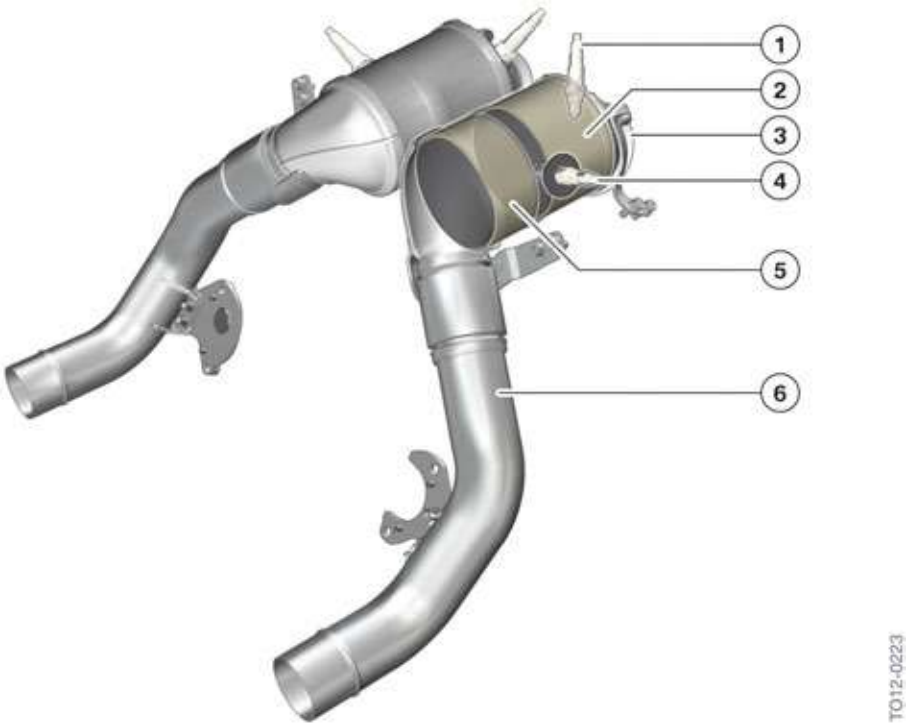

N63TU, sectional view of the catalytic converter

Index	Explanation
1	Control sensor
2	Ceramic monolith 1
3	Connection of the turbine
4	Monitoring sensor
5	Ceramic monolith 2
6	Exhaust pipe

Oxygen sensors

The typical Bosch oxygen sensors are used:

- Control sensor: LSU ADV
- Monitoring sensor: LSF4.2.

The control sensor is located ahead of the primary ceramic monolith, as close as possible to the turbine outlet. Its position has been chosen so that all the cylinders can be recorded separately. The monitoring sensor is positioned between the first and second ceramic monoliths.

cardiagn.com

N63TU Engine

6. Vacuum System

The vacuum system of the N63TU engine demonstrates some changes with regard to the N63 engine. The vacuum reservoir and the pressure converter are in the familiar locations. The bolting points of the vacuum pump have a new arrangement due to the new cylinder head.

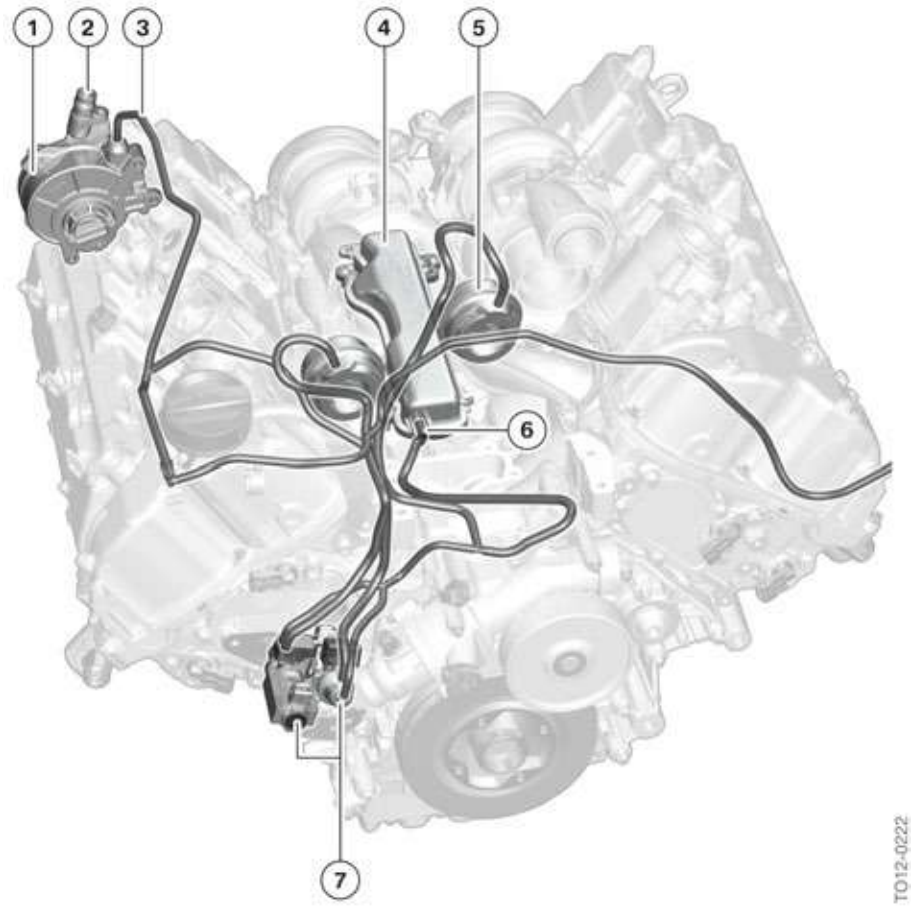

N63TU, vacuum system

Index	Explanation
1	Vacuum pump
2	Connection, brake servo
3	Connection for secondary consumer
4	Vacuum reservoir
5	Vacuum units for wastegate valves
6	Connection for vacuum line to the electric changeover valve for vacuum units of exhaust flaps
7	Electropneumatic pressure converter (EPDW) for wastegate valves

The vacuum pump (as usual) is designed to have two stages so that the majority of the generated vacuum is made available to the brake servo. The vacuum reservoir is positioned in the V-space and is now made out of plastic.

cardiagn.com

N63TU Engine

7. Fuel Preparation

The N63TU engine makes use of high-pressure injection, which was introduced in the N55 engine. It differs from high-precision injection (HPI) in that it uses solenoid valve type injectors with multi-hole nozzles.

7.1. Overview

The following overview shows the fuel preparation system of the N63TU engine. It essentially corresponds to the systems with direct fuel injection familiar in BMW models. Only the guide of the fuel line has been adapted in the area of the alternator.

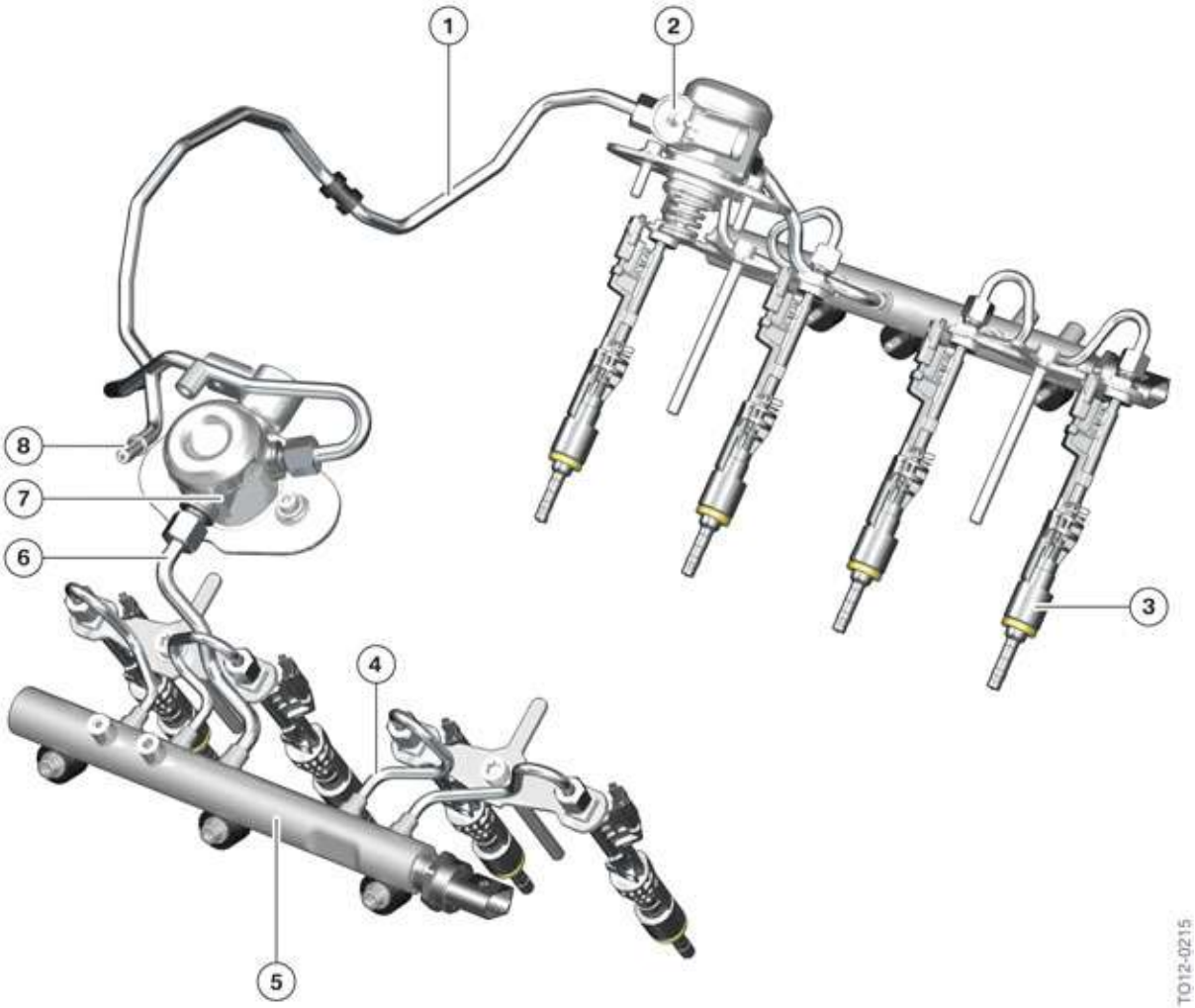

N63TU, fuel preparation

Index	Explanation
1	Fuel line
2	Fuel quantity control valve
3	Injector
4	High pressure line, rail - injector

cardiagn.com

Index	Explanation
5	Rail
6	High pressure line, high pressure pump to rail
7	High pressure pump
8	Fuel supply line

Bosch high-pressure fuel injection valves with the designation HDEV5.2 are used. The high pressure pump is already known from the 4-, 8- and 12-cylinder engines. An innovation in the N63TU engine is the fact that the high pressure lines from rail to injector are now no longer bolted at the rail end, but welded as on N20.

Do not open the fuel system if the coolant temperature is above 40°C/104°F. The residual pressure in the high pressure fuel system could cause bodily injury.

It is essential to observe the utmost cleanliness when working on the high pressure fuel system and to follow the proper working procedures described in the repair instructions. Even minute soiling or damage at the thread connections of the high pressure lines could cause leaks.

When working on the fuel system of the N63TU engine, it is important to ensure that the ignition coils are not wet with fuel. The resistance of the silicone material is greatly reduced by sustained contact with fuel. This could result in arcing at the top of the spark plug and misfiring.

- Before making any modifications to the fuel system, always remove the ignition coils and protect the spark plug shaft against the ingress of fuel by covering them with a cloth
- Before reinstalling the solenoid valve injectors, remove the ignition coils and ensure that greatest possible cleanliness is maintained.
- Ignition coils heavily saturated with fuel must be replaced.

7.2. Fuel pump control

The fuel is delivered from the fuel tank through the electric fuel pump via the feed line at a primary pressure of 5.9 bar (85.57 psi) to the high pressure pump. The on-load speed control is done via the DME. The low-pressure sensor has been eliminated.

7.3. High pressure pump

The known Bosch high pressure pump is used. This is a single-plunger pump which is driven from the exhaust camshaft via a triple cam. So that sufficient fuel pressure is guaranteed in each load condition of the engine, a high pressure pump is used in the N63TU engine for each bank.

For further information on the high pressure pump, please refer to the "N74 Engine" training material available on TIS and ICP.

cardiagn.com

7.4. Injectors

The Bosch HDEV5.2 solenoid valve injector is an inward-opening multi-hole valve – unlike the outward-opening piezo injector used in HPI engines. The HDEV5.2 is also characterized by high variability with regard to spray angle and spray shape, and is configured for a system pressure of up to 200 bar (2900 psi).

These injectors are already used in the N55 and N20 engines.

For further information on injector activation, refer to the Engine Management System section.

N63TU, injector

The stems of the solenoid valve injectors can only withstand a certain tensile force and a certain torque. It is essential when removing and installing the injectors to follow the specific procedure described in the repair instructions, as otherwise the injectors will be damaged.

If an injector or a cylinder was replaced, an injection quantity compensation must be performed. This is performed with help of the adjustment value. The adjustment value is imprinted on the injector body with three figures. The adjustment value must be read before the installation and input in the DME with the use of a test plan in ISTA.

cardiagn.com

N63TU Engine

8. Fuel Supply

The fuel supply is vehicle-specific. The previously known components are used.

cardiagn.com

N63TU Engine

9. Engine Management System

9.1. Overview

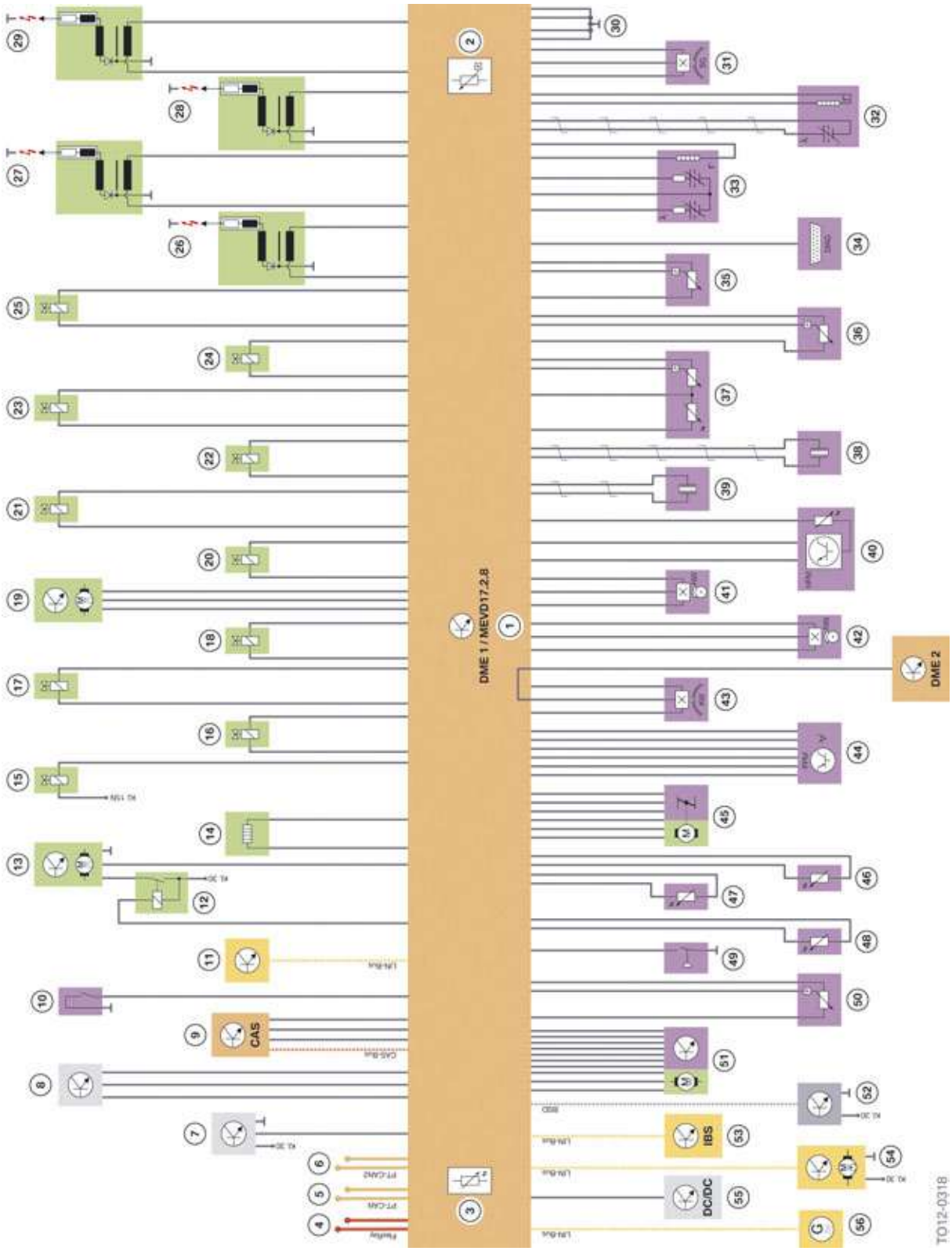

N63TU, DME 1/system wiring diagram MEVD17.2.8

cardiagn.com

N63TU Engine

9. Engine Management System

Index	Explanation
1	Engine electronics Valvetronic direct fuel injection MEVD17.2.8 DME 1
2	Ambient pressure sensor
3	Temperature sensor
4	FlexRay
5	PT-CAN
6	PT-CAN2
7	Tank leak diagnosis, Natural Vacuum Leak Detection NVLD (only US version)
8	Zero-gear sensor (only with automatic engine start-stop function, manual gearbox)
9	Car Access System (CAS)
10	Clutch switch (with manual gearbox only)
11	Active cowl flap control
12	Relay for electric fan
13	Electric fan
14	Map thermostat
15	Exhaust flaps (1 valve, 2 flaps)
16	Tank vent valve
17	VANOS solenoid valve, intake camshaft
18	VANOS solenoid valve, exhaust camshaft
19	Electric coolant pump, exhaust turbocharger
20	Electropneumatic pressure converter (EPDW) wastegate
21	Quantity control valve
22–25	Injectors
26–29	Ignition coils
30	Ground
31	Speed sensor (manual gearbox only)
32	Oxygen sensor LSF4.2
33	Oxygen sensor LSU ADV
34	Engine speed signal diagnostic connector
35	Charging pressure sensor before throttle valve
36	Rail pressure sensor
37	Charge air temperature and intake-manifold pressure sensor after throttle valve
38	Knock sensors 1 – 2
39	Knock sensors 3 - 4
40	Hot film air mass meter (HFM) 7

cardiagn.com

Index	Explanation
41	Camshaft sensor, intake camshaft
42	Camshaft sensor, exhaust camshaft
43	Crankshaft sensor, signal is looped through to DME slave
44	Accelerator pedal module
45	Throttle valve
46	Engine temperature (sensor at housing of coolant pump)
47	Coolant temperature at radiator outlet
48	Oil temperature sensor
49	Oil pressure switch
50	Brake vacuum sensor (only with automatic engine start-stop function, manual gearbox)
51	Valvetronic servomotor
52	Oil level sensor
53	Intelligent battery sensor (IBS)
54	Electric coolant pump, charge air cooler and Digital Engine Electronics (DME)
55	DC/DC converter (for automatic engine start-stop function)
56	Alternator

cardiagn.com

N63TU Engine

9. Engine Management System

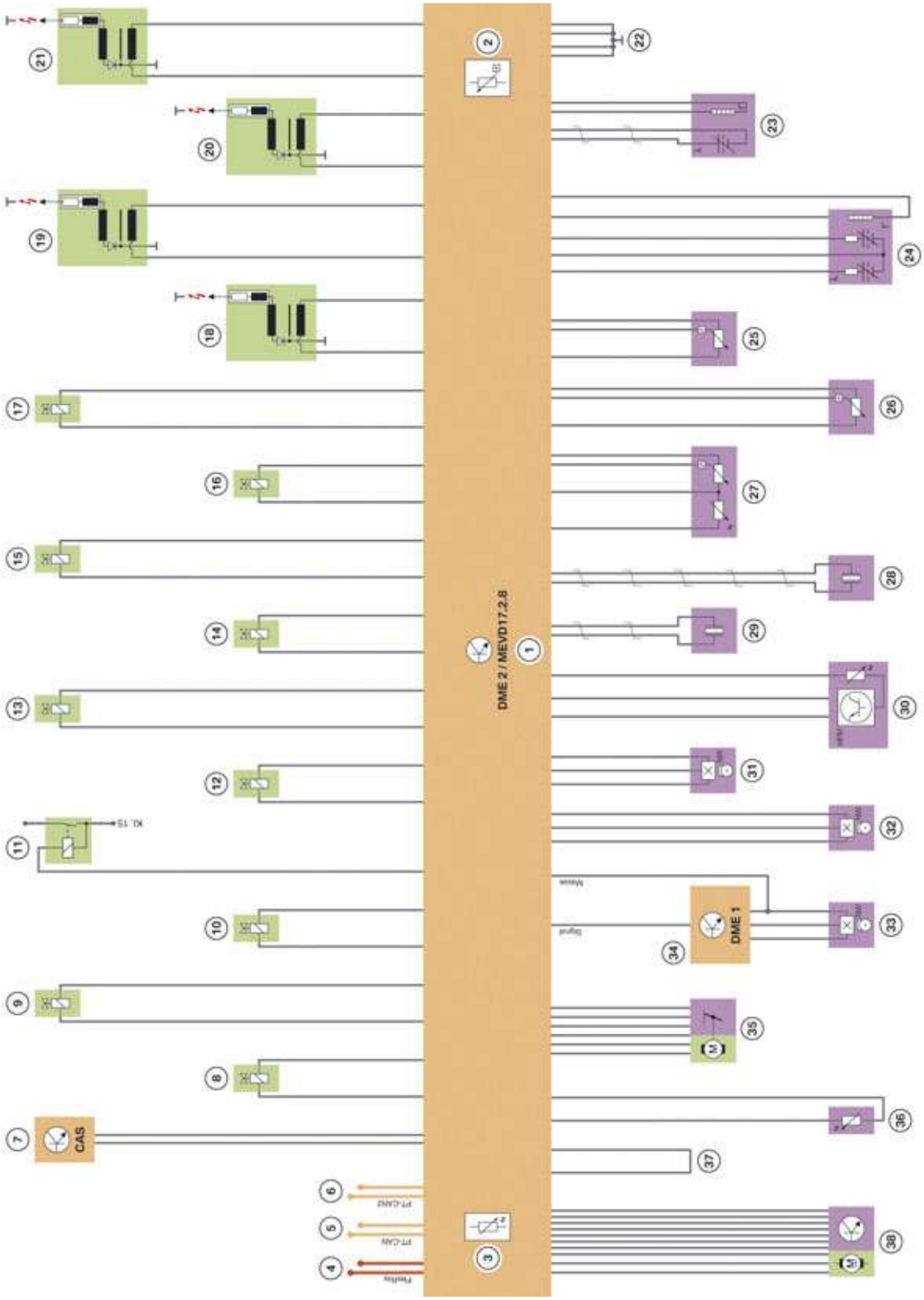

N63TU, DME 2/system wiring diagram MEVD17.2.8

cardiagn.com

N63TU Engine

9. Engine Management System

Index	Explanation
1	Engine electronics Valvetronic direct fuel injection MEVD17.2.8 DME 2
2	Ambient pressure sensor
3	Temperature sensor
4	FlexRay
5	PT-CAN
6	PT-CAN2
7	Car Access System (CAS)
8	Tank vent valve
9	VANOS solenoid valve, intake camshaft
10	VANOS solenoid valve, exhaust camshaft
11	Relay, transmission oil pump (manual gearbox only)
12	Pressure converter (EPDW)
13	Quantity control valve
14–17	Injector
18–21	Ignition coil
22	Ground
23	Oxygen sensor LSF4.2
24	Oxygen sensor LSU ADV
25	Charging pressure sensor before throttle valve
26	Rail pressure sensor
27	Charge air temperature and intake-manifold pressure sensor after throttle valve
28	Knock sensors 5 - 6
29	Knock sensors 7 - 8
30	Hot film air mass meter (HFM) 7
31	Camshaft sensor, intake camshaft
32	Camshaft sensor, exhaust camshaft
33	Crankshaft sensor
34	Digital Engine Electronics (DME) master
35	Throttle valve
36	NTC transmission oil temperature (only with manual gearbox)
37	DME 1/ DME 2 encoding
38	Valvetronic servomotor

cardiagn.com

N63TU Engine

9. Engine Management System

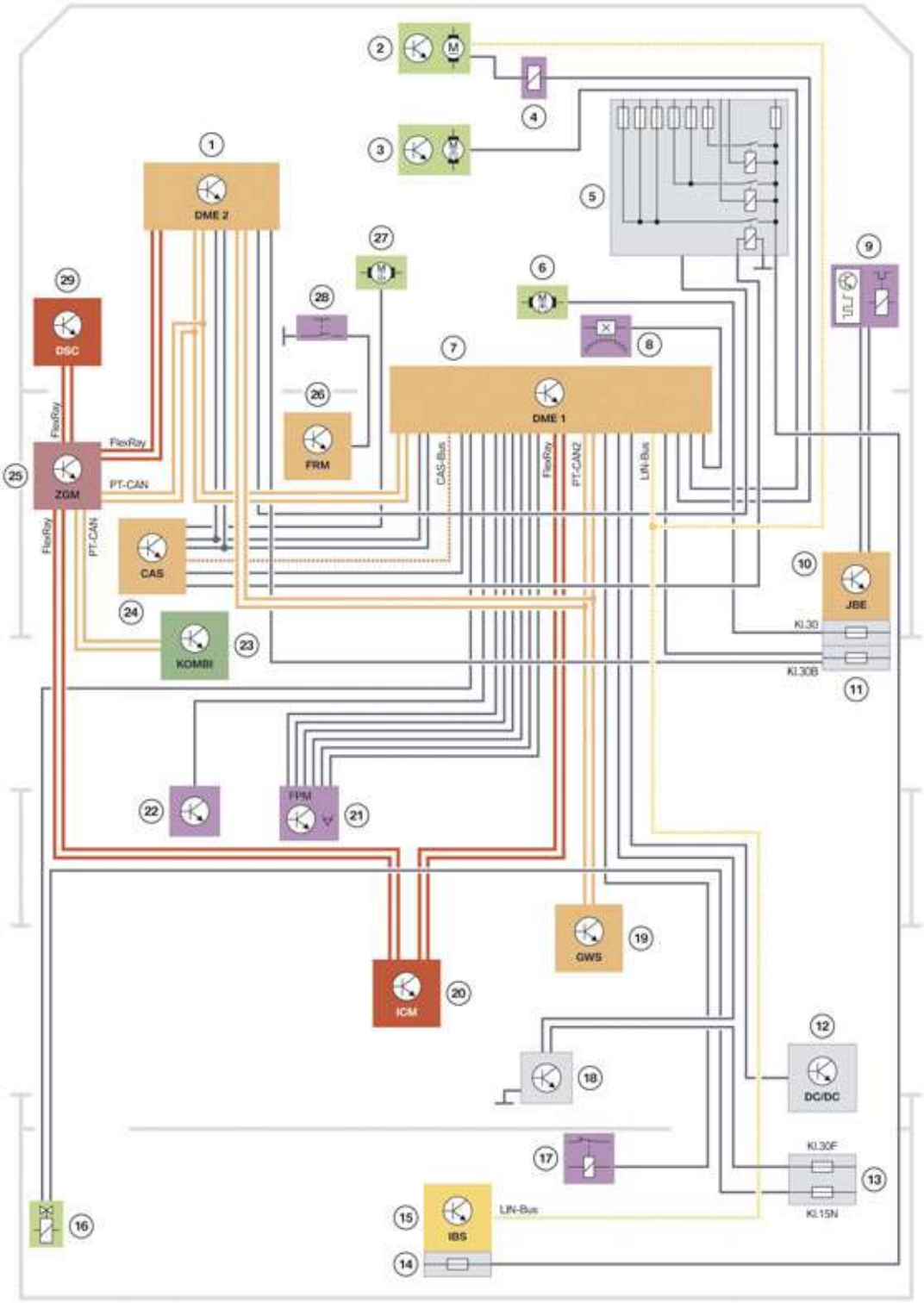

N63TU, vehicle connection module 100 of DME 1 and DME 2

cardiagn.com

Index	Explanation
1	Digital Engine Electronics (DME 2)
2	Automatic air flap control
3	Electric fan
4	Solenoid for the automatic air flap control
5	Power distribution boxes
6	Electric auxiliary water pump for charge air and DME
7	Digital Engine Electronics (DME 1)
8	Transmission speed sensor (manual gearbox only)
9	A/C compressor
10	Junction box (JB)
11	Fuse, terminal 30B
12	DC/DC converter (for automatic engine start-stop function)
13	Rear right power distribution box
14	Fuse, terminal 30
15	Intelligent battery sensor (IBS)
16	Valve, exhaust flap
17	Relay for electric fan
18	Tank leak diagnosis (only for US)
19	Gear selector lever (only automatic)
20	Integrated Chassis Management (ICM)
21	Accelerator pedal module
22	Coupling switch module (manual gearbox only)
23	Instrument cluster
24	Car Access System (CAS)
25	Central gateway module (CGM)
26	Footwell module (FRM)
27	Starter motor
28	Switch reversing light (manual gearbox only)
29	Dynamic Stability Control DSC

9.2. Engine control unit

The N63TU engine has a Bosch DME with the designation MEVD17.2.8. It is strongly related to the Digital Engine Electronics of the N55 engine. There is a separate water-cooled engine control unit fixed to the engine for every bank. The actuators and sensors of bank one are assigned to the DME 1 control unit, the DME 2 control unit is responsible for the functions of bank two. DME 1 is the mas-

cardiagn.com

ter control unit and also assumes all information concerning the entire engine, such as turning on the crankshaft sensor and making it available to the DME 2 control unit directly or via the bus system. Due to the variety of sensors and actuators a distribution to two control units was necessary.

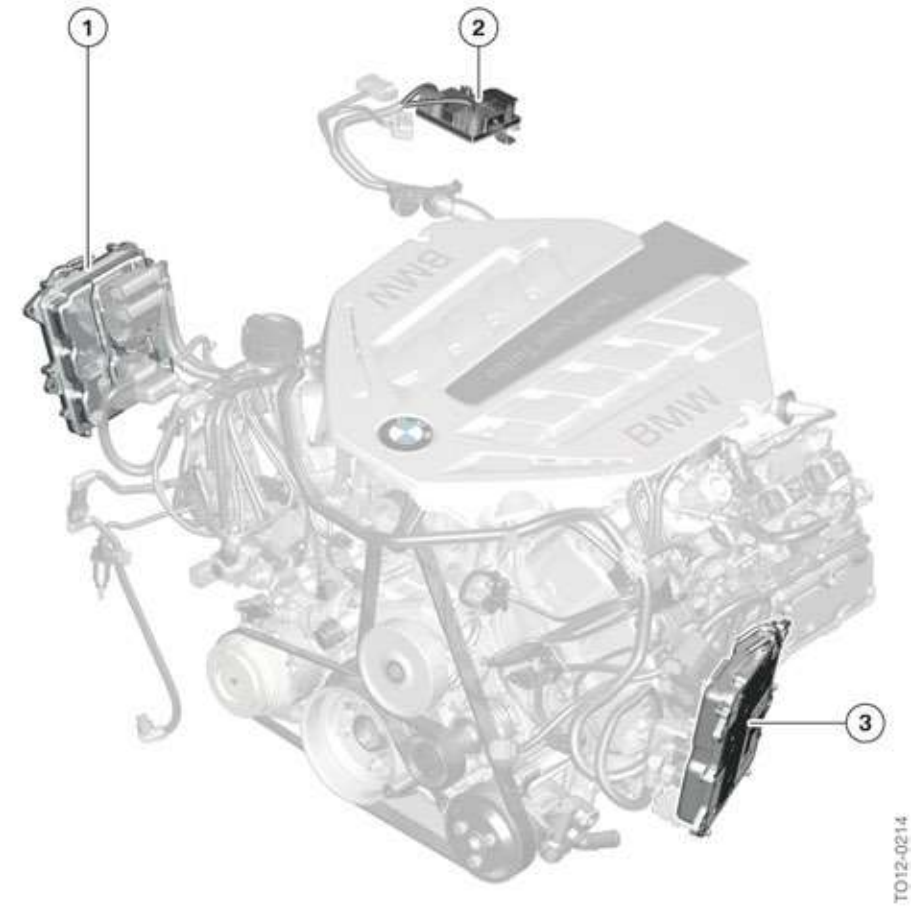

N63TU, Digital Engine Electronics

Index	Explanation
1	DME control unit, bank 1
2	Power distribution boxes
3	DME control unit, bank 2

Do not attempt any trial replacement of control units.

Because of the electronic immobilizer, a trial replacement of control units from other vehicles must not be attempted under any circumstances. An immobilizer adjustment cannot be reversed.

The cooling of the two control units of the Digital Engine Electronics is done by connection to the cooling circuit of the charge air cooling. An aluminium cooling loop is integrated in the housing base of the control units for this system.

cardiagn.com

The plug connector concept is identical to the MEVD17.2 in the N55 engine. There is a logical division into six modules.

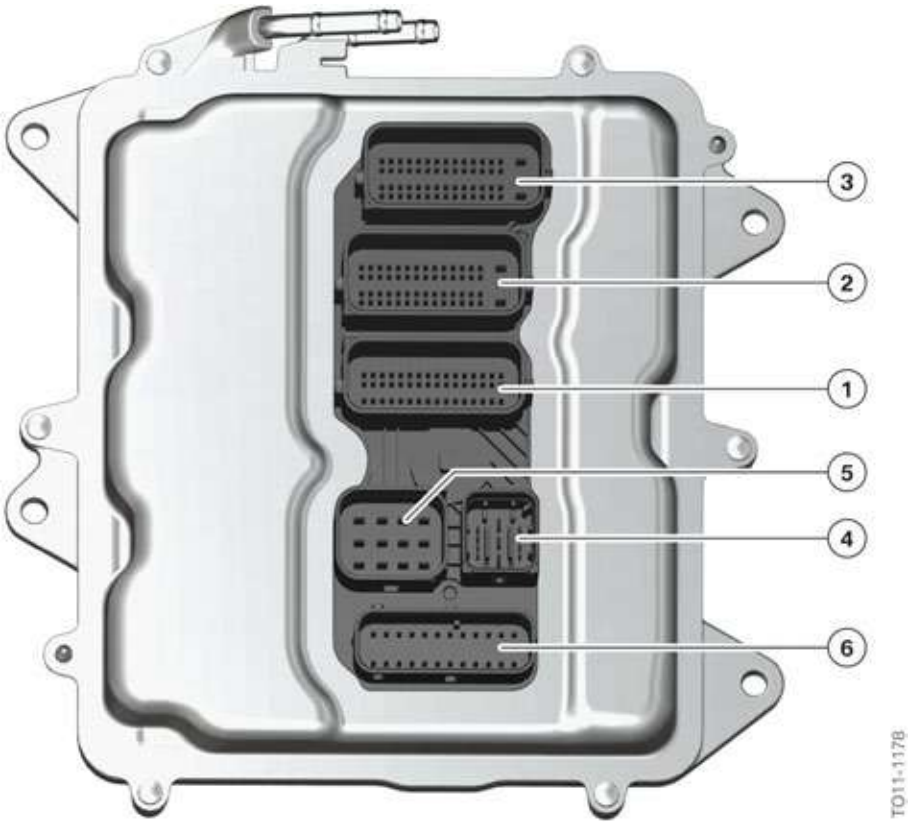

N63TU, MEVD17.2.8 DME connections

Index	Explanation
1	Module 100, vehicle connection, 48 pins
2	Module 200, sensors and actuators 1, 58 pins
3	Module 300, sensors and actuators 2, 58 pins
4	Module 400, Valvetronic servomotor, 11 pins
5	Module 500, DME supply, 12 pins
6	Module 600, fuel injection and ignition, 24 pins

9.2.1. Overall function

The Digital Engine Electronics (DME) is the computing and switching center of the engine control system. Sensors on the engine and the vehicle deliver the input signals. The signals for activating the actuators are calculated from the input signals, the set-point values calculated using a computing model in the DME control unit and the stored program maps. The DME control unit activates the actuators directly or via relays.

The DME control unit is woken up via the wake-up line (terminal 15 Wake-up) by the Car Access System (CAS).

cardiagn.com

The after-run starts after terminal 15 OFF. The adaptation values are stored during the after-run. The DME control unit uses a bus signal to signal its readiness to "go to sleep". When all the participating control units have signalled their readiness to "go to sleep", the bus master outputs a bus signal and the control units terminate communication five seconds later.

The board in the DME control unit accommodates two sensors: a temperature sensor and an ambient pressure sensor. The temperature sensor is used to monitor the temperature of the components in the DME control unit. The ambient pressure is required for calculating the air/fuel mixture composition.

cardiagn.com

cardiagn.com

Bayerische Motorenwerke Aktiengesellschaft
Händlerqualifizierung und Training
Röntgenstraße 7
85716 Unterschleißheim, Germany