WIPER AND WASHER SYSTEM

PRECAUTION

1. WASHER NOZZLE ADJUSTMENT PRECAUTION

(a) Do not clean or adjust the washer nozzle using objects such as needles or safety pins, because;

(1) The washer nozzle tip is made of resin and could be damaged.

(2) Adjustment is not necessary as the washer nozzle is a spray type.

(b) If the washer nozzle is clogged with substances such as car wax, remove it and clean the nozzle hole with a soft resin brush or similar tool.

PARTS LOCATION

HACHBACK:

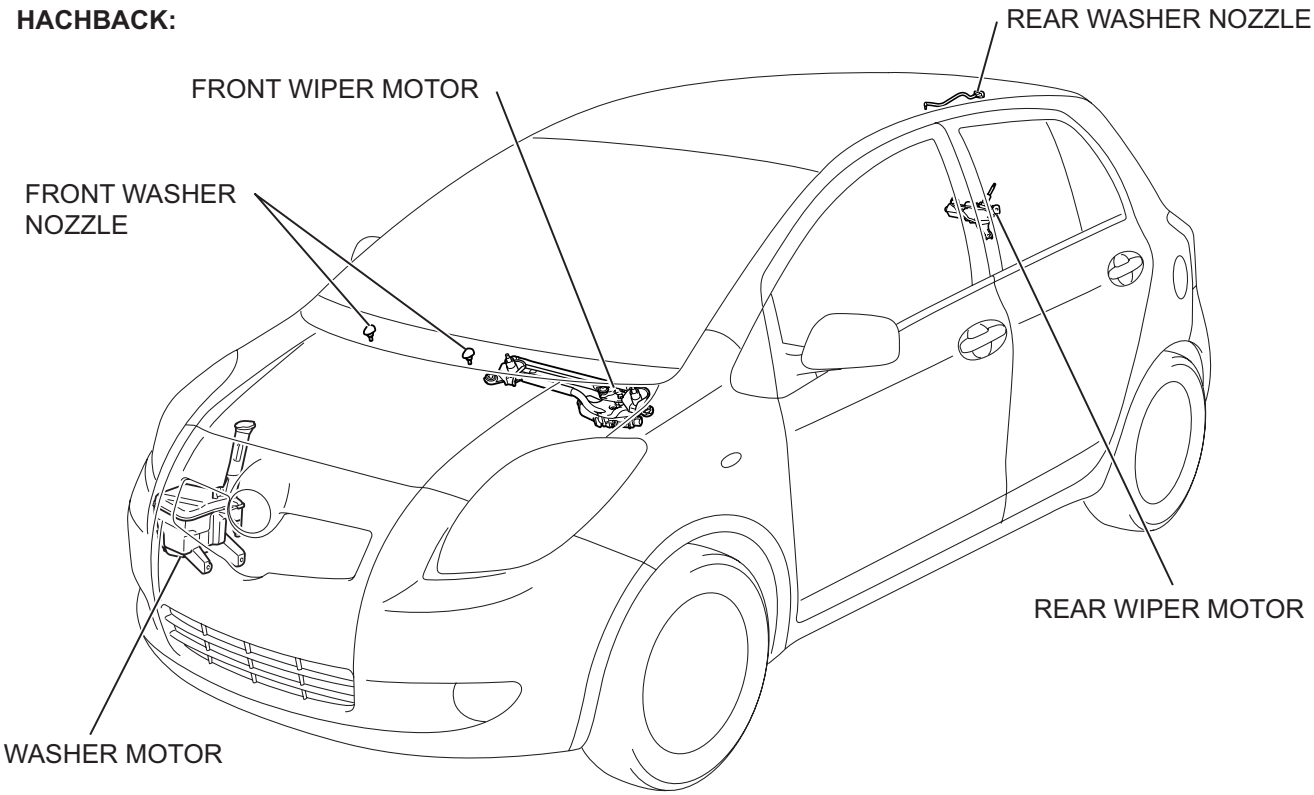

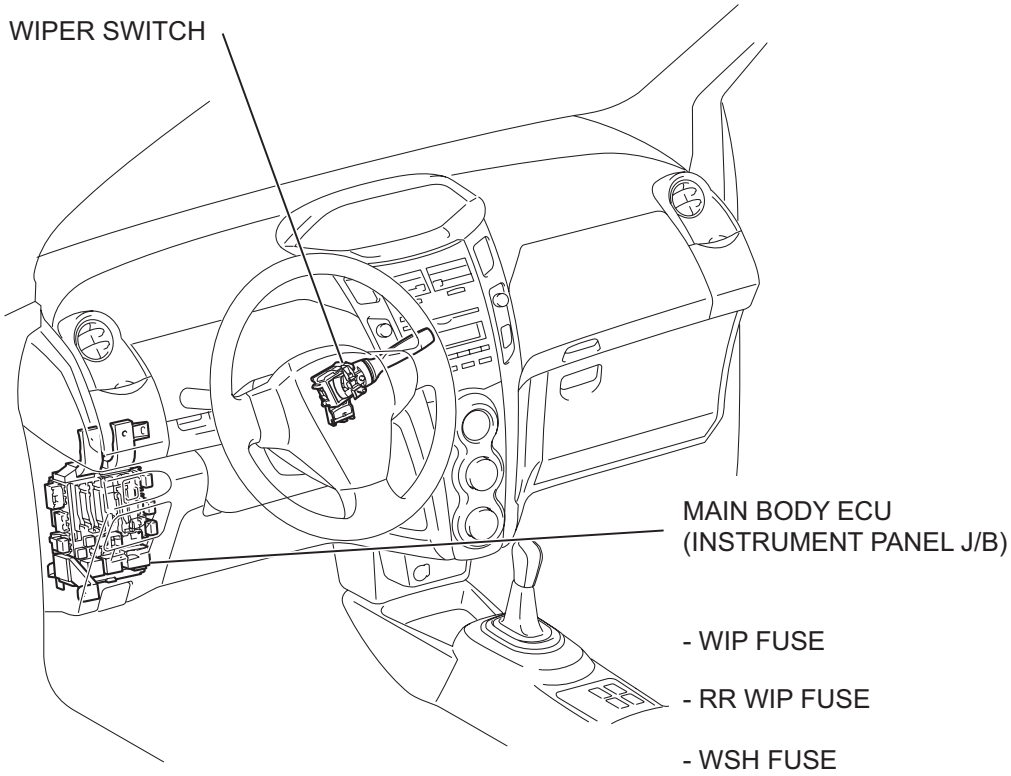

Y

E114278E04

WW

SEDAN:

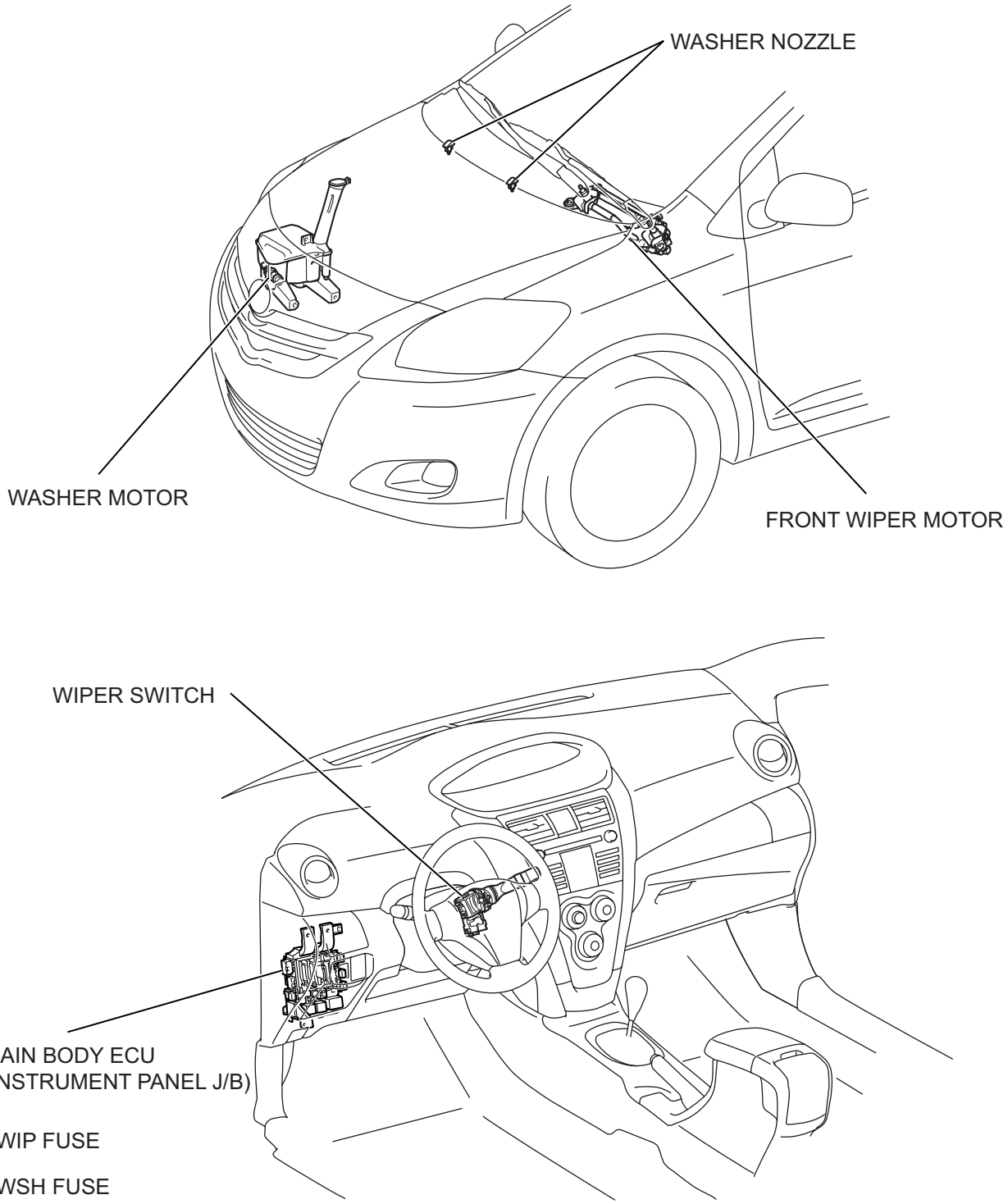
WASHER NOZZLE
WASHER MOTOR
FRONT WIPER MOTOR
WIPER SWITCH
MAIN BODY ECU
(INSTRUMENT PANEL J/B)
- WIP FUSE
- WSH FUSE
H
B142259E01

SYSTEM DIAGRAM

Front Wiper and Washer:

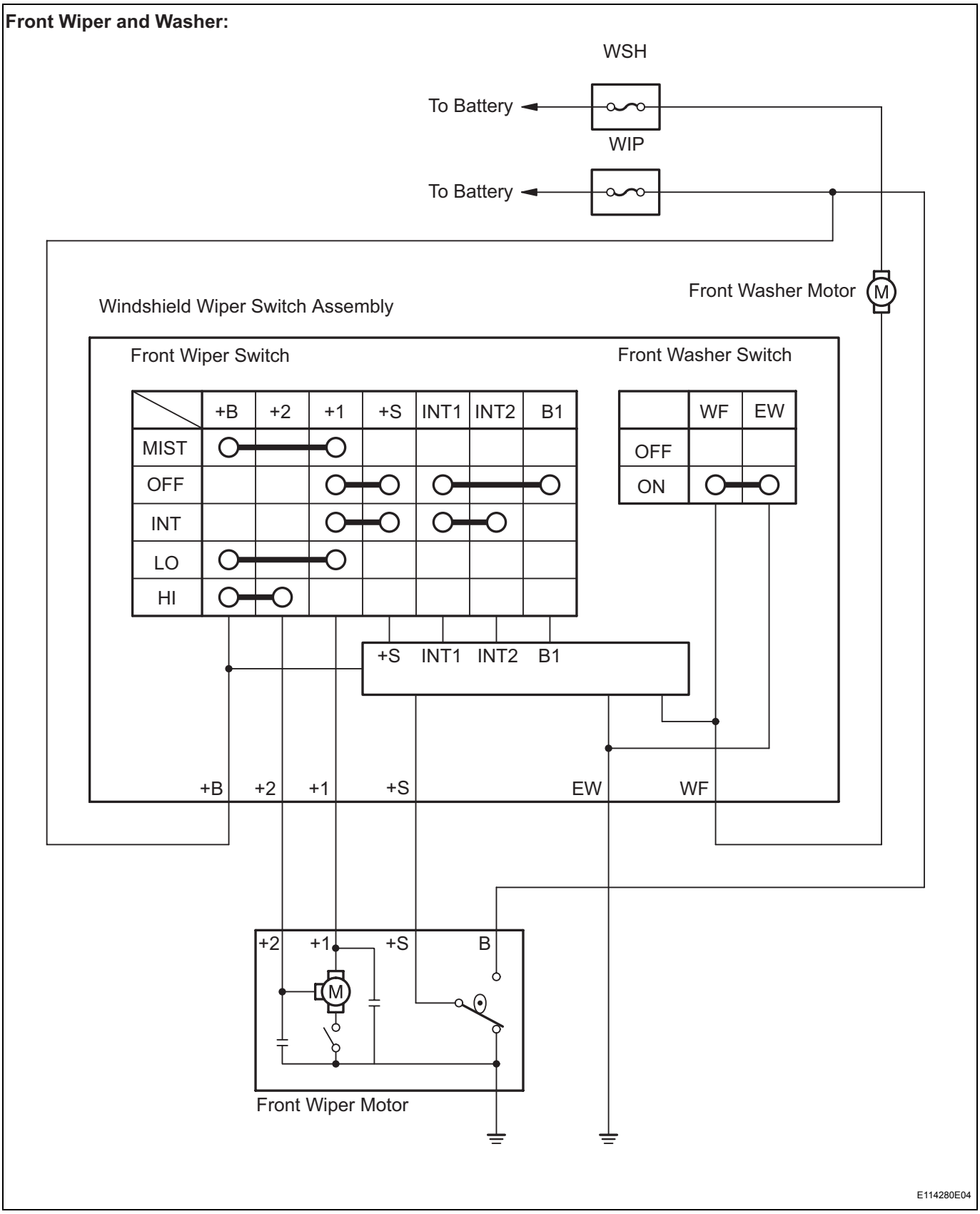

WW

Rear Wiper and Washer:

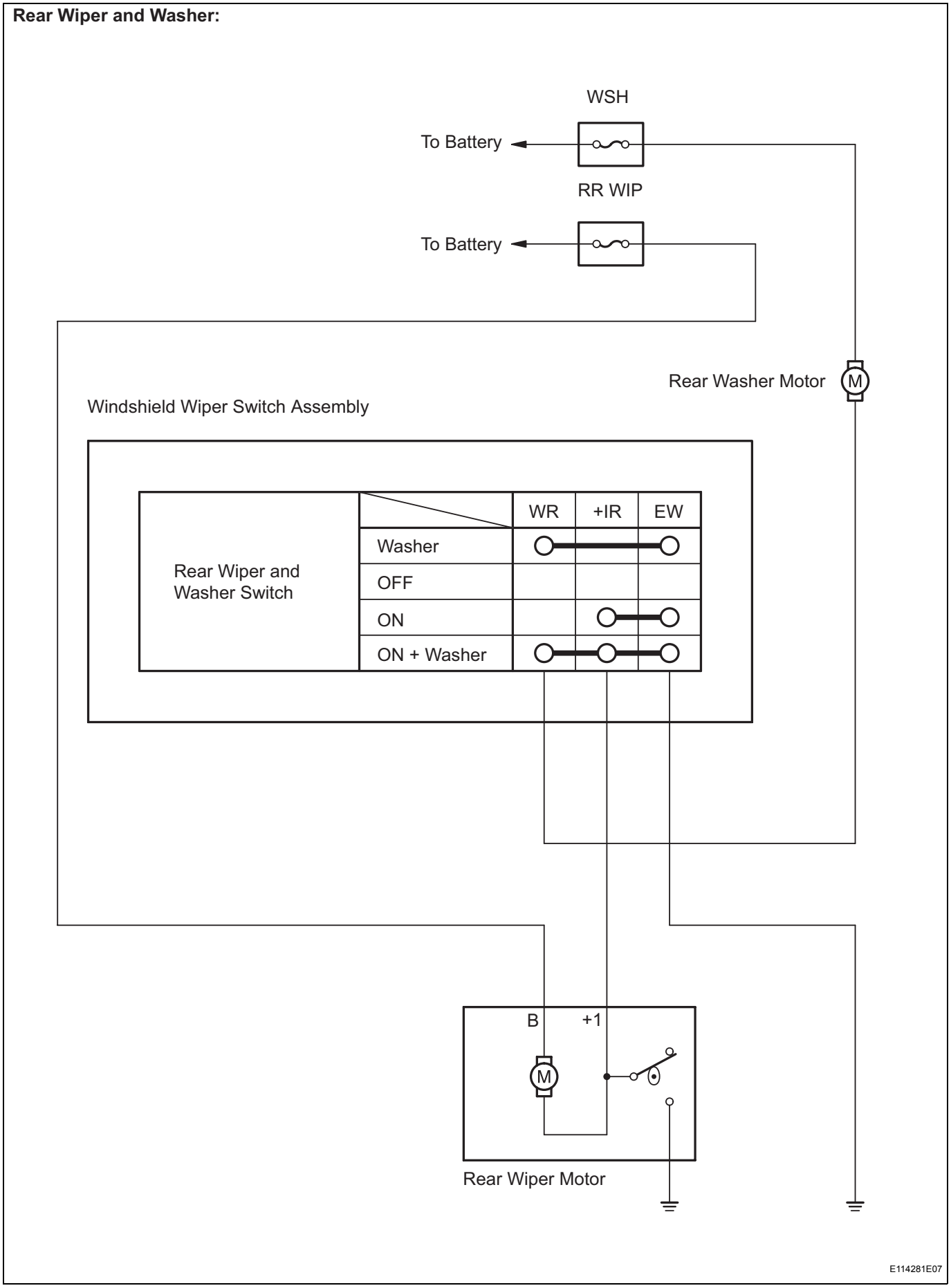

WW

PROBLEM SYMPTOMS TABLE

HINT:
Use the table below to help determine the causes of the problem symptom. The potential causes of the symptoms are listed in order of probability in the "Suspected Area" column of the table. Check each symptom by checking the suspected areas in the order they are listed. Replace parts as necessary.

Wiper and washer system

Symptom	Suspected area	See page
Front wipers and washer system do not operate	WIP fuse	WW-2
	WSH fuse	WW-2
	Windshield wiper switch assembly (for hatchback)	WW-39
	Windshield wiper switch assembly (for sedan)	WW-35
	Wire harness	-
Front wipers do not operate in LO or HI	WIP fuse	WW-2
	Windshield wiper switch assembly (for hatchback)	WW-39
	Windshield wiper switch assembly (for sedan)	WW-35
	Front wiper motor (for hatchback)	WW-19
	Front wiper motor (for sedan)	WW-11
	Wire harness	-
Front wipers do not operate in INT	WIP fuse	WW-2
	Windshield wiper switch assembly (for hatchback)	WW-39
	Windshield wiper switch assembly (for sedan)	WW-35
	Front wiper motor (for hatchback)	WW-19
	Front wiper motor (for sedan)	WW-11
	Wire harness	-
Front washer motor does not operate	WSH fuse	WW-2
	Windshield wiper switch assembly (for hatchback)	WW-39
	Windshield wiper switch assembly (for sedan)	WW-35
	Front washer motor (for hatchback)	WW-51
	Front washer motor (for sedan)	WW-45
	Wire harness	-
Front wipers do not operate when washer switch on	WIP fuse	WW-2
	Windshield wiper switch assembly (for hatchback)	WW-39
	Windshield wiper switch assembly (for sedan)	WW-35
	Front wiper motor (for hatchback)	WW-19
	Front wiper motor (for sedan)	WW-11
	Wire harness	-
Front wiper arms do not return to their original positions when wiper switch turned off	Front wiper motor (for hatchback)	WW-19
	Front wiper motor (for sedan)	WW-11
	Wire harness	-
Rear wiper and washer system do not operate	RR WIP fuse	WW-2
	WSH fuse	WW-2
	Windshield wiper switch assembly	WW-39
	Wire harness	-
Rear wiper motor does not operate	RR WIP fuse	WW-2
	Windshield wiper switch assembly	WW-39
	Rear wiper motor	WW-29
	Wire harness	-

Symptom	Suspected area	See page
Rear washer motor does not operate	WSH fuse	WW-2
	Windshield wiper switch assembly	WW-39
	Rear washer motor	WW-51
	Wire harness	-
Rear wiper arm does not return to its original position when rear wiper switch turned off	Rear wiper motor	WW-29
	Wire harness	-

FRONT WIPER MOTOR (for Sedan)

COMPONENTS

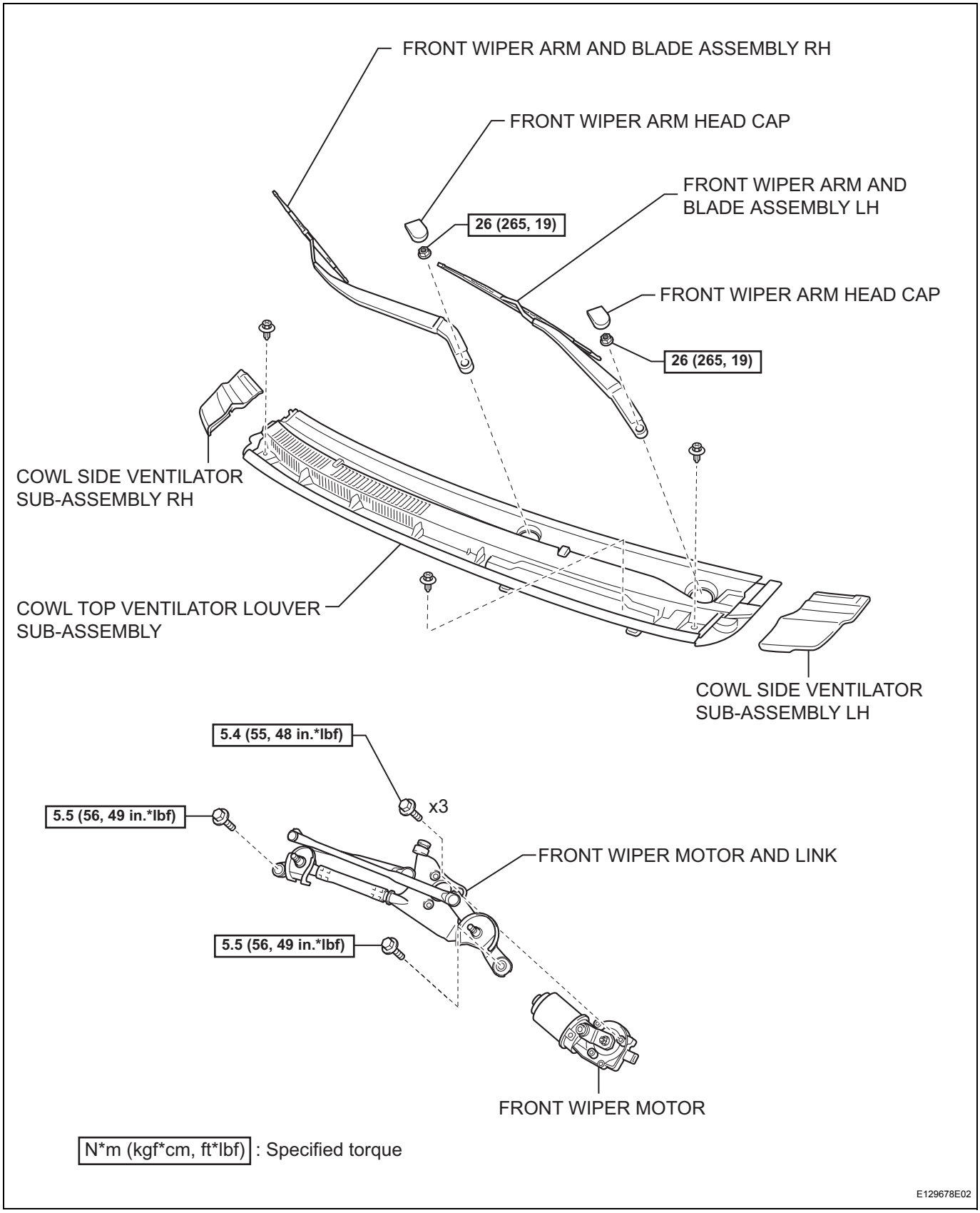

WW

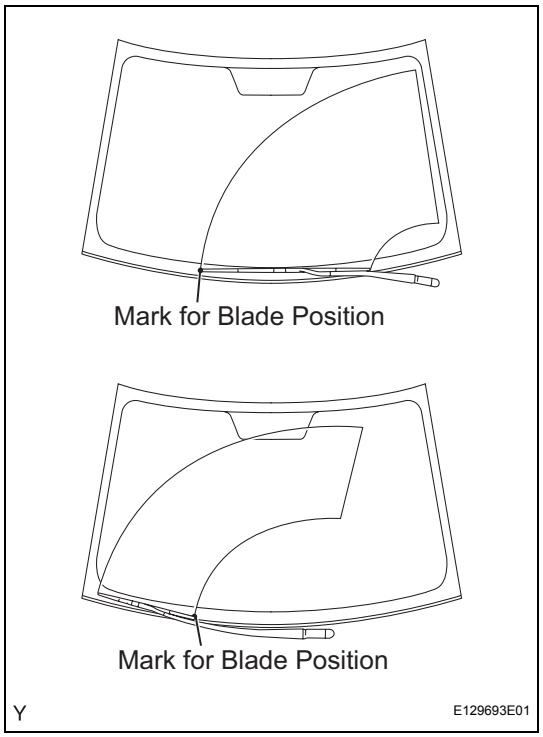

ON-VEHICLE INSPECTION

1. INSPECT FRONT WIPER MOTOR

(a) Check the automatic stop position.

(1) Operate the front wiper motor, then stop the operation.

(2) Check the automatic stop position when the front wiper motor operation has stopped.

Standard:

Front wiper arm stops in the position shown in the illustration.

REMOVAL

1. DISCONNECT CABLE FROM NEGATIVE BATTERY TERMINAL

2. REMOVE FRONT WIPER ARM HEAD CAP

(a) Using a screwdriver with its tip wrapped in protective tape, disengage the claw and remove the 2 front wiper arm head caps.

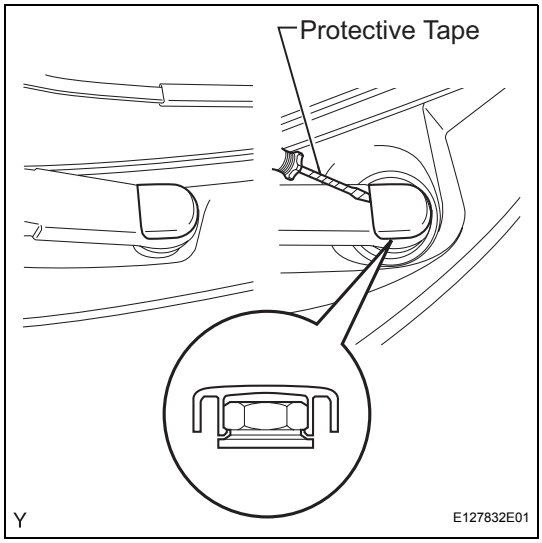

3. REMOVE FRONT WIPER ARM AND BLADE ASSEMBLY LH

(a) Operate the wiper, then stop the windshield wiper motor in the automatic stop position.

(b) Remove the nut and front wiper arm.

4. REMOVE FRONT WIPER ARM AND BLADE ASSEMBLY RH

HINT:

Use the same procedure as for the LH side.

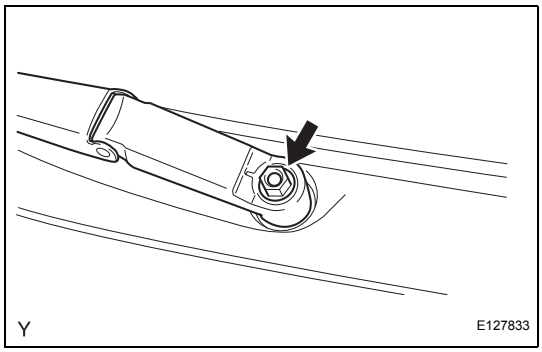

5. REMOVE COWL SIDE VENTILATOR SUB-ASSEMBLY LH

(a) Using a screwdriver with its tip wrapped in protective tape, disengage the 3 claws and remove the cowl side ventilator sub-assembly LH.

6. REMOVE COWL SIDE VENTILATOR SUB-ASSEMBLY RH

HINT:

Use the same procedure as for the LH side.

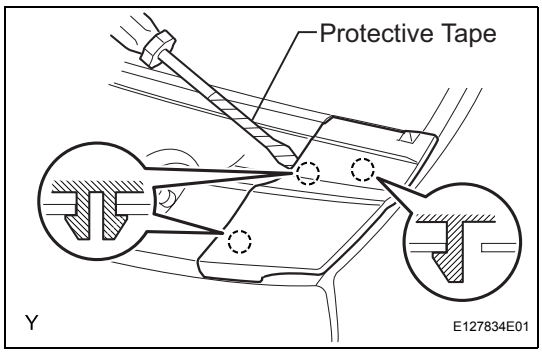

7. REMOVE COWL TOP VENTILATOR LOUVER SUB-ASSEMBLY

(a) Disengage the 3 clips, the 4 claws and the 8 hooks.

(b) Remove the cowl top ventilator louver sub-assembly.

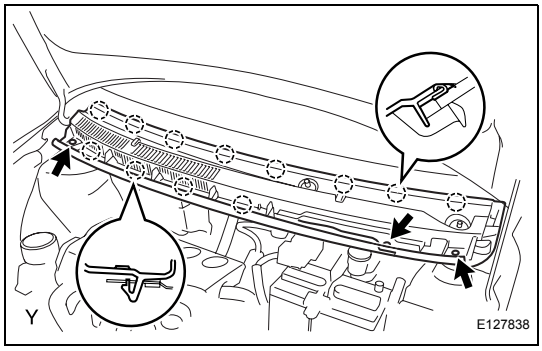

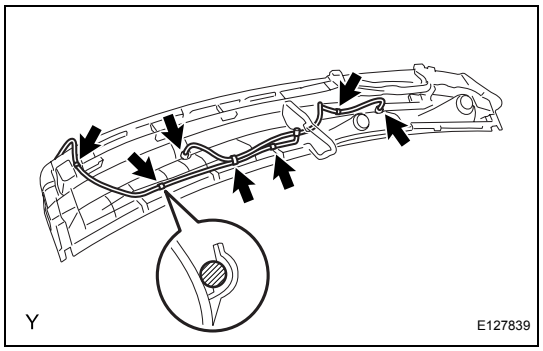

(c) Disconnect the washer hoses.
(d) Disengage the 5 hooks.

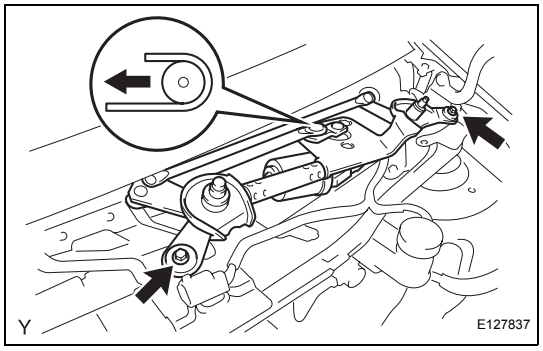

8. REMOVE FRONT WIPER MOTOR AND LINK

(a) Remove the 2 bolts.
(b) Slide the wiper link. Disengage the meshing of the rubber pin, then disconnect the connector and remove the front wiper motor and link.

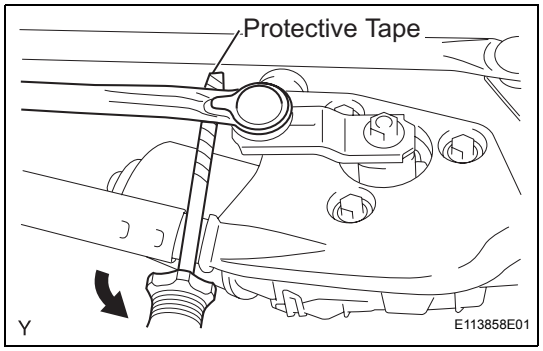

9. REMOVE FRONT WIPER MOTOR

(a) Using a screwdriver with its tip wrapped in protective tape, disengage the meshing of the rod at the crank arm pivot of the front wiper motor.

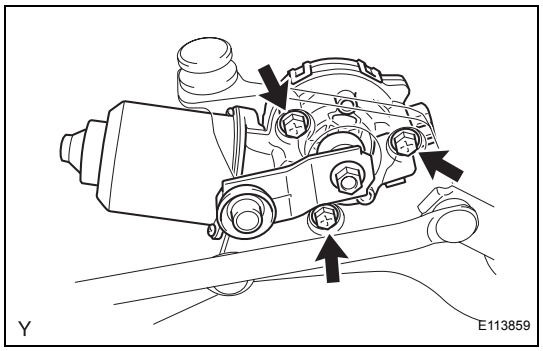

(b) Remove the 3 bolts and the front wiper motor.

INSPECTION

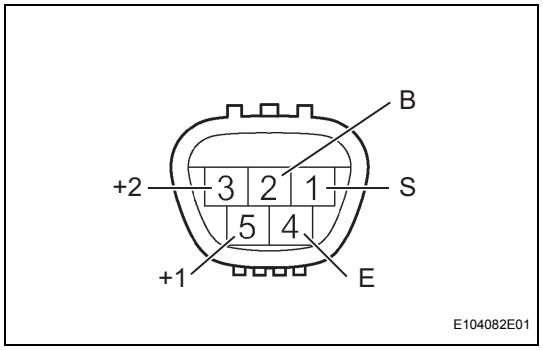

1. INSPECT FRONT WIPER MOTOR

(a) Check the LO operation.
(1) Connect the positive (+) battery lead to terminal 5 (+1) of the connector and the negative (-) battery lead to terminal 4 (E), then check that the motor operates at low speed (LO).
Standard:
Motor operates at low speed (LO).
If the result is not as specified, replace the motor.

(b) Check the HI operation.
  (1) Connect the positive (+) battery lead to terminal 3 (+2) of the connector and the negative (-) battery lead to terminal 4 (E), then check that the motor operates at high speed (HI).
  Standard:
  Motor operates at high speed (HI).
  If the result is not as specified, replace the motor.

(c) Check the automatic stop operation.
  (1) Connect the positive (+) battery lead to terminal 5 (+1) of the connector and the negative (-) battery lead to terminal 4 (E). With the motor operating at low speed (LO), disconnect terminal 5 (+1) to stop the wiper motor operation at any position other than the automatic stop position.
  (2) Using SST, connect terminals 1 (S) and 5 (+1). Connect the positive (+) battery lead to terminal 2 (B) of the connector to restart the motor operation at low speed (LO).
  SST 09843-18040
  (3) Check that the motor stops automatically in the automatic stop position.
  Standard:
  Refer to the illustration.
  If the result is not as specified, replace the motor assembly.

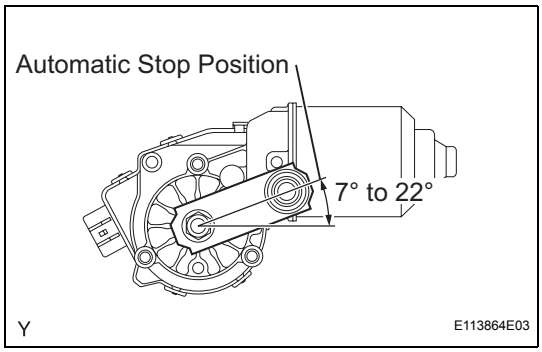

INSTALLATION

1. INSTALL FRONT WIPER MOTOR

(a) Install the front wiper motor with the 3 bolts.
Torque: 5.4 N*m (55 kgf*cm, 48 in.*lbf)

(b) Apply DENSO No. 50 grease to the crank arm pivot of the front wiper motor.

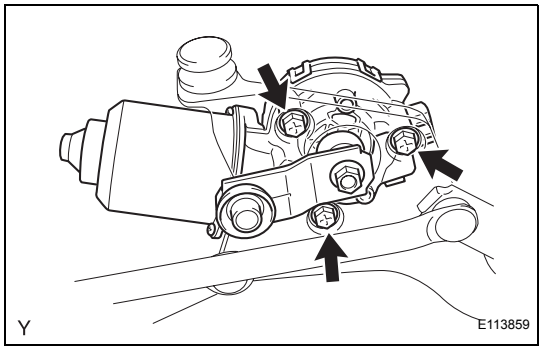

(c) Install the rod onto the crank arm pivot of the front wiper motor.

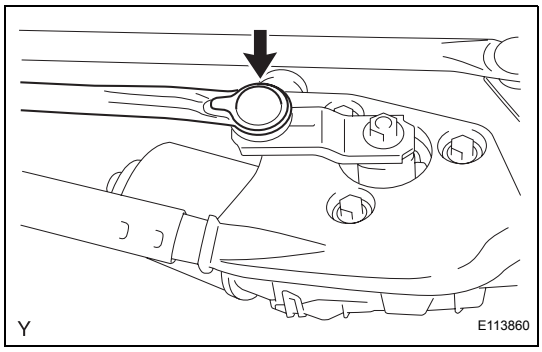

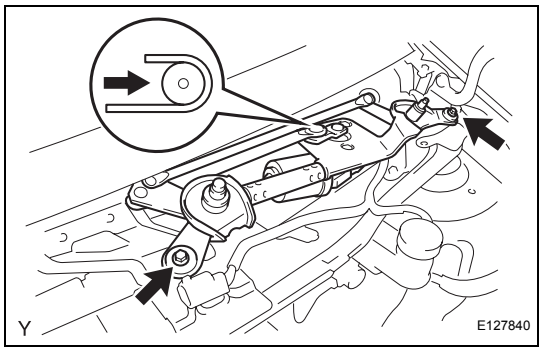

2. INSTALL FRONT WIPER MOTOR AND LINK

(a) Connect the connector.

(b) Slide the wiper link as shown in the illustration and engage the rubber pin with the body.

(c) Install the front wiper motor and link with the 2 bolts.
Torque: 5.5 N*m (56 kgf*cm, 49 in.*lbf)

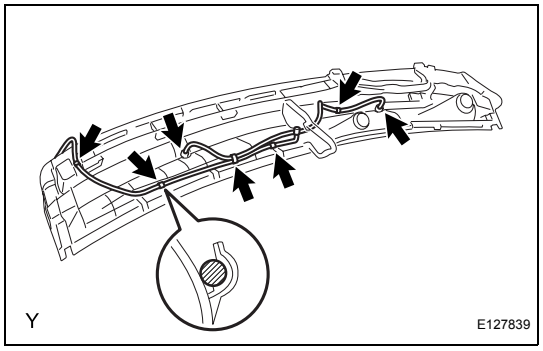

3. INSTALL COWL TOP VENTILATOR LOUVER SUB-ASSEMBLY

(a) Connect the washer hoses.

(b) Engage the 5 hooks.

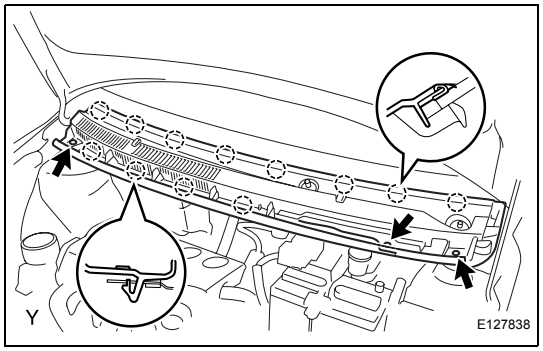

(c) Engage the 8 hooks and the 4 claws.

(d) Install the cowl top ventilator louver sub-assembly with the 3 clips.

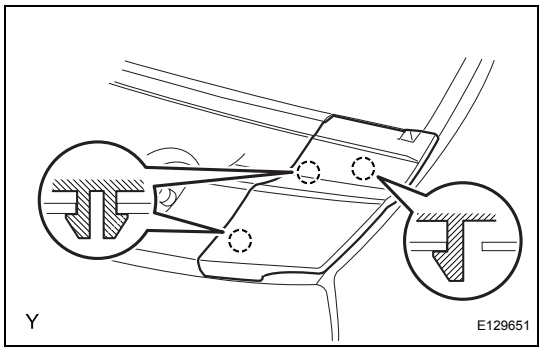

4. INSTALL COWL SIDE VENTILATOR SUB-ASSEMBLY LH

(a) Engage the 3 claws and install the cowl side ventilator sub-assembly LH.

5. INSTALL COWL SIDE VENTILATOR SUB-ASSEMBLY RH

HINT:
Use the same procedure as for the LH side.

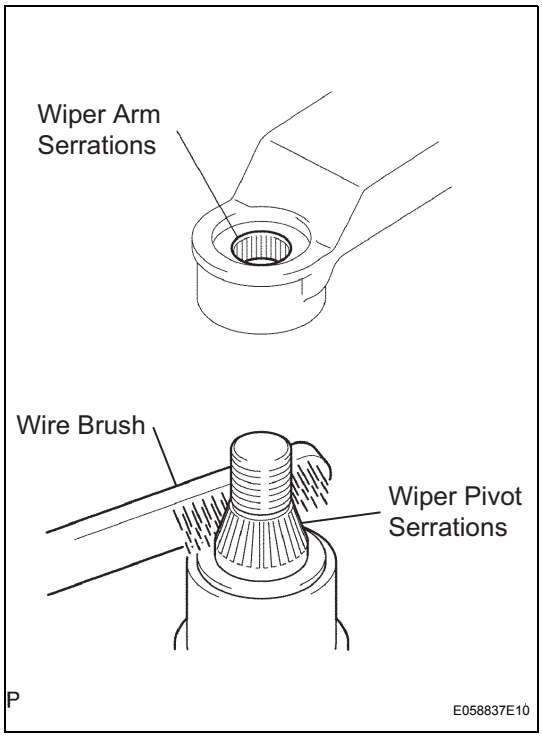

6. INSTALL FRONT WIPER ARM AND BLADE ASSEMBLY LH

(a) Scrape any metal powder off the serrated part of the wiper arm with a round file or the equivalent (when reinstalling).

(b) Clean the wiper pivot serrations with a wire brush.

(c) Operate the wiper, then stop the windshield wiper motor in the automatic stop position.

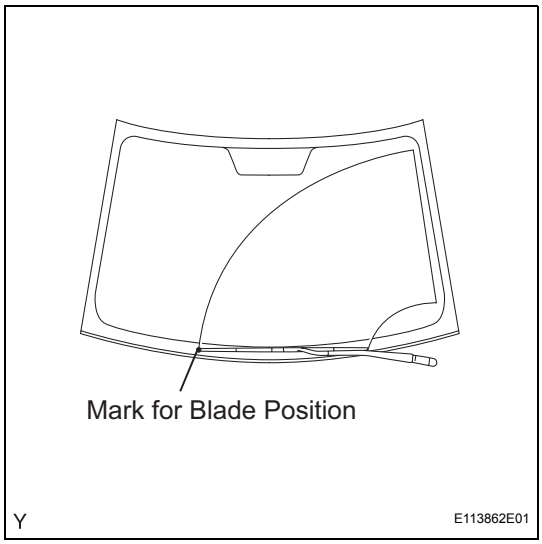

(d) Align the blade tip with the mark on the windshield glass, as shown in the illustration.

(e) Tighten the nut of the front wiper arm.
Torque: 26 N*m (265 kgf*cm, 19 ft.*lbf)

WW

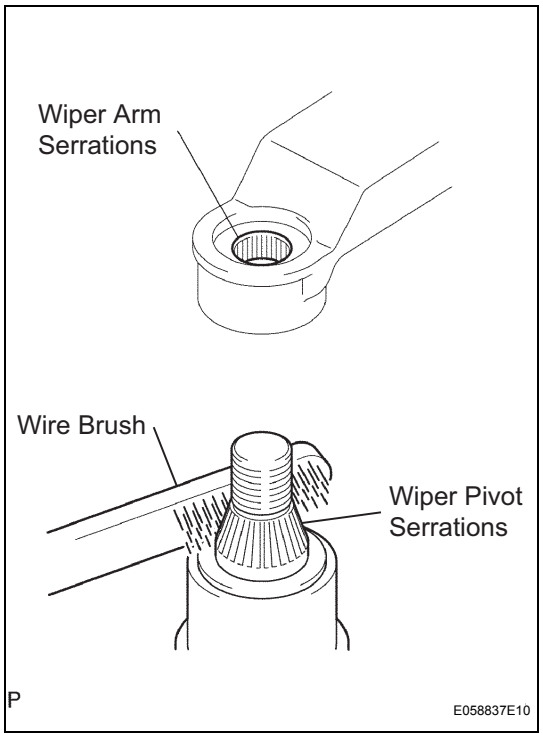

7. INSTALL FRONT WIPER ARM AND BLADE ASSEMBLY RH

(a) Scrape any metal powder off the serrated part of the wiper arm with a round file or the equivalent (when reinstalling).

(b) Clean the wiper pivot serrations with a wire brush.

(c) Operate the wiper, then stop the windshield wiper motor in the automatic stop position.

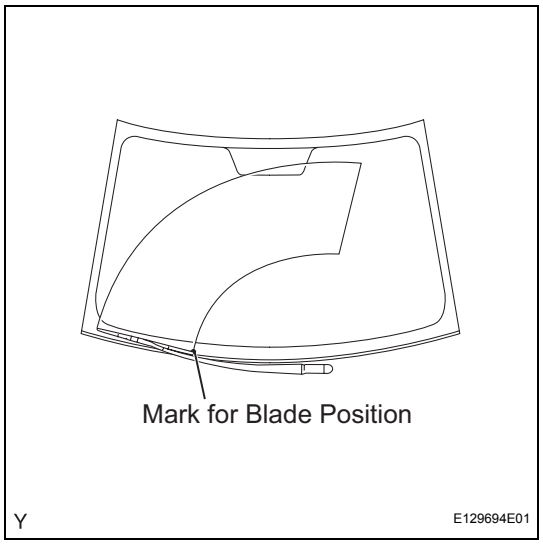

(d) Align the blade tip with the mark on the windshield glass, as shown in the illustration.

(e) Tighten the nut of the front wiper arm.
Torque: 26 N*m (265 kgf*cm, 19 ft.*lbf)

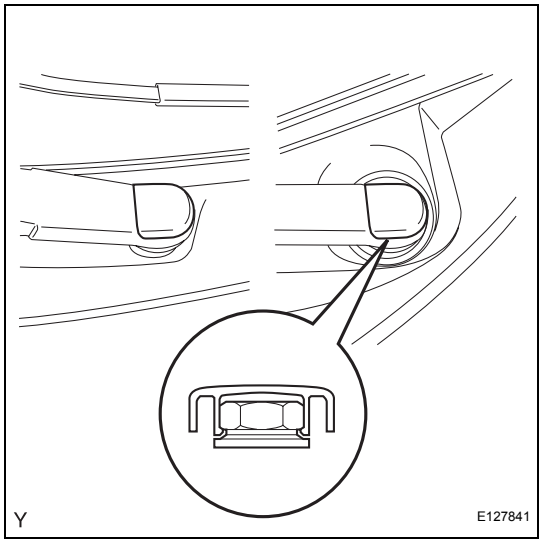

8. INSTALL FRONT WIPER ARM HEAD CAP

(a) Engage the claw and install the 2 front wiper arm head caps.

9. CONNECT CABLE TO NEGATIVE BATTERY TERMINAL
Torque: 5.4 N*m (55 kgf*cm, 48 in.*lbf)

FRONT WIPER MOTOR (for Hatchback)

COMPONENTS

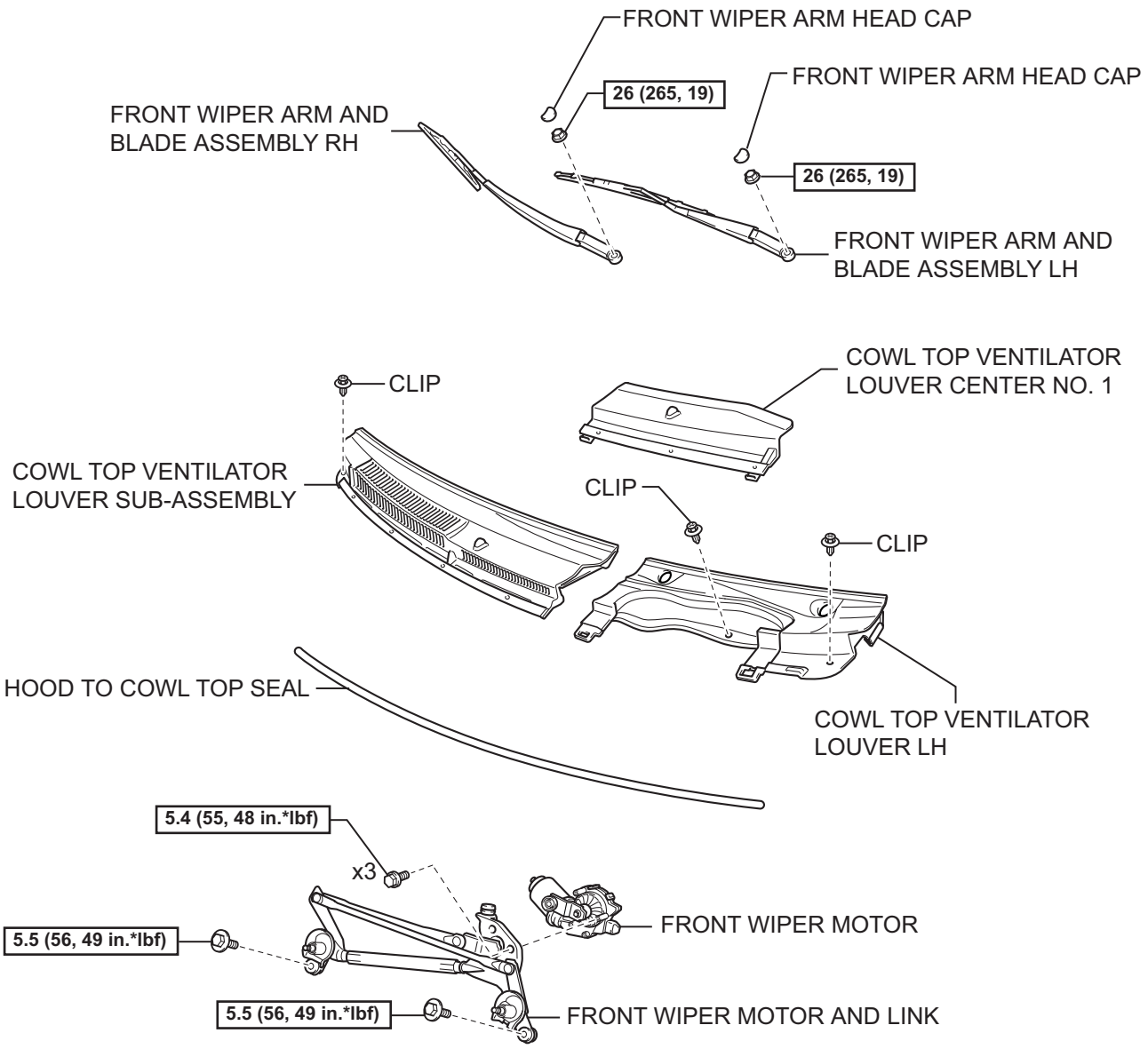

N*m (kgf*cm, ft*lbf) : Specified torque

Y

E117222E02

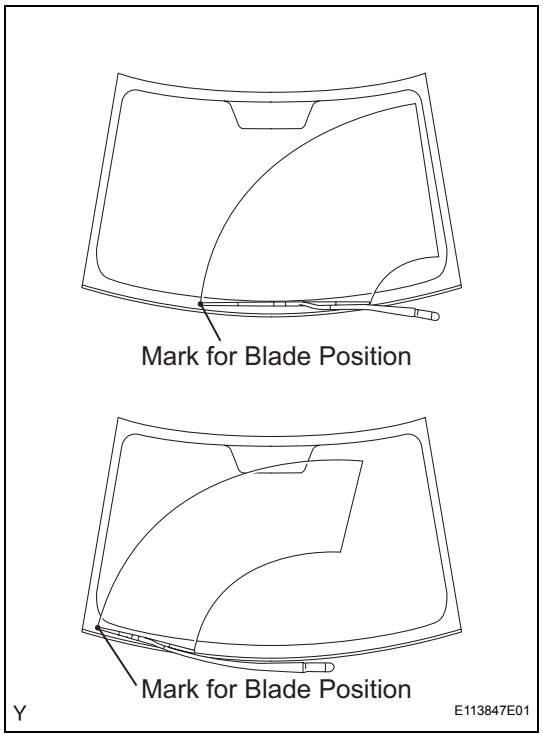

ON-VEHICLE INSPECTION

1. INSPECT FRONT WIPER MOTOR

(a) Check the automatic stop position.

(1) Operate the front wiper motor, then stop the operation.

(2) Check the automatic stop position when the front wiper motor operation has stopped.

Standard:

Front wiper arm stops in the position shown in the illustration.

REMOVAL

1. DISCONNECT CABLE FROM NEGATIVE BATTERY TERMINAL

2. REMOVE FRONT WIPER ARM HEAD CAP

(a) Using a screwdriver with its tip wrapped in protective tape, disengage the claw and remove the 2 front wiper arm head caps.

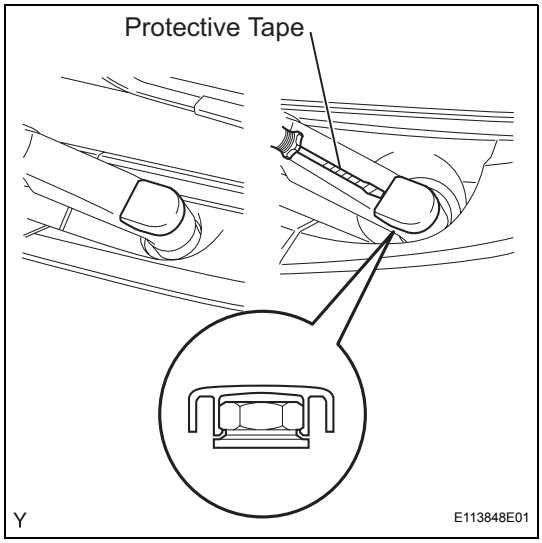

3. REMOVE FRONT WIPER ARM AND BLADE ASSEMBLY LH

(a) Operate the wiper, then stop the windshield wiper motor in the automatic stop position.

(b) Remove the nut and front wiper arm.

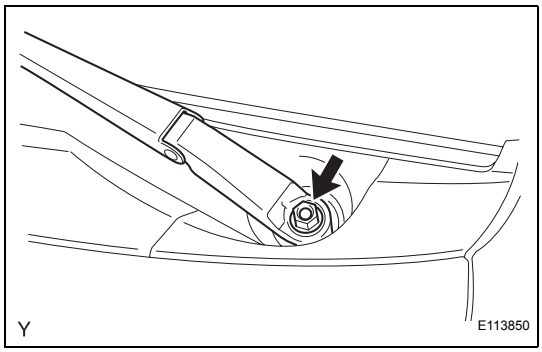

4. REMOVE FRONT WIPER ARM AND BLADE ASSEMBLY RH

HINT:

Use the same procedure as for the LH side.

5. REMOVE HOOD TO COWL TOP SEAL

(a) Disengage the 7 clips and remove the hood to cowl top seal.

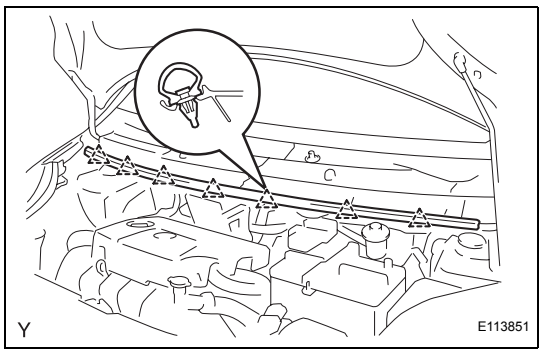

6. REMOVE COWL TOP VENTILATOR LOUVER SUB-ASSEMBLY

(a) Disengage the 2 hooks and remove cowl top ventilator louver center No. 1.

(b) Disconnect the washer hose.

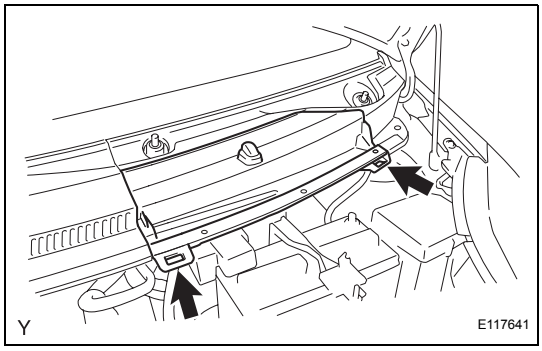

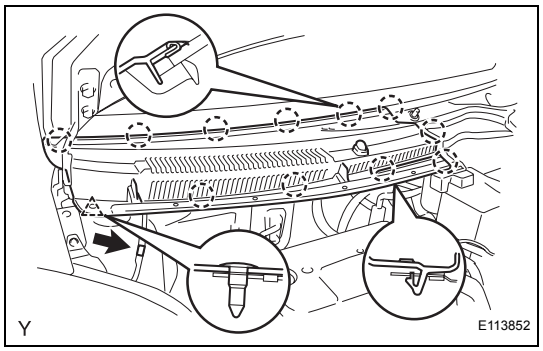

(c) Disengage the 11 claws and clip.

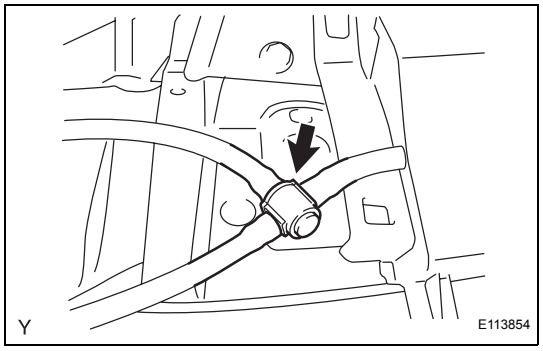

(d) Disconnect the washer hose and remove the cowl top ventilator louver sub-assembly.

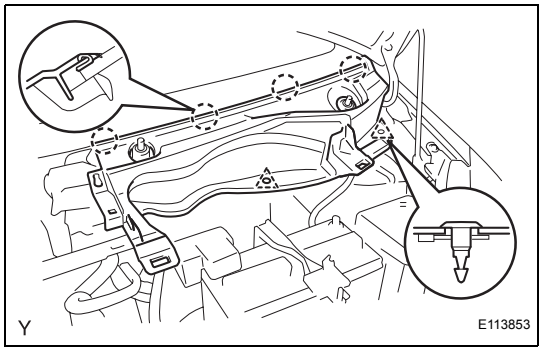

7. REMOVE COWL TOP VENTILATOR LOUVER LH

(a) Remove the 2 clips.

(b) Disengage the 4 claws and remove the cowl top ventilator louver LH.

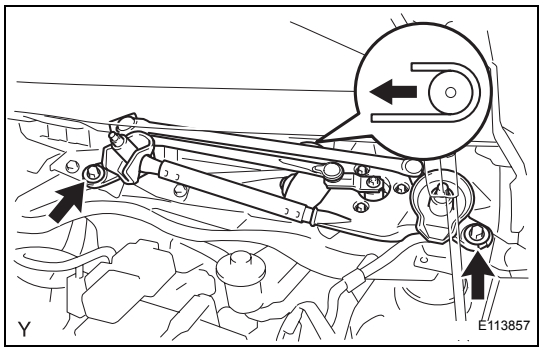

8. REMOVE FRONT WIPER MOTOR AND LINK

(a) Remove the 2 bolts.

(b) Slide the wiper link. Disengage the meshing of the rubber pin, then disconnect the connector and remove the front wiper motor and link.

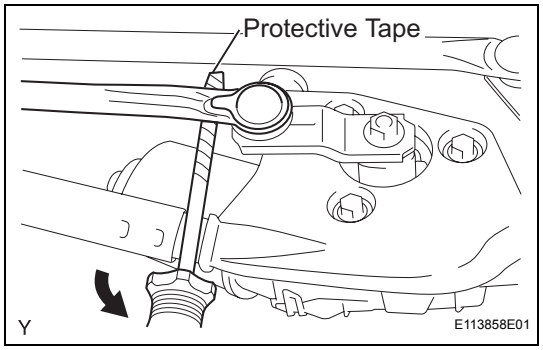

9. REMOVE FRONT WIPER MOTOR

(a) Using a screwdriver with its tip wrapped in protective tape, disengage the meshing of the rod at the crank arm pivot of the front wiper motor.

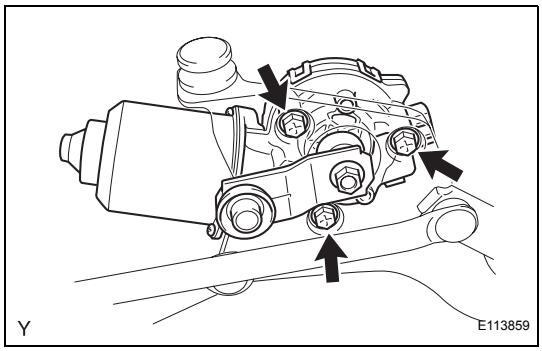

(b) Remove the 3 bolts and the front wiper motor.

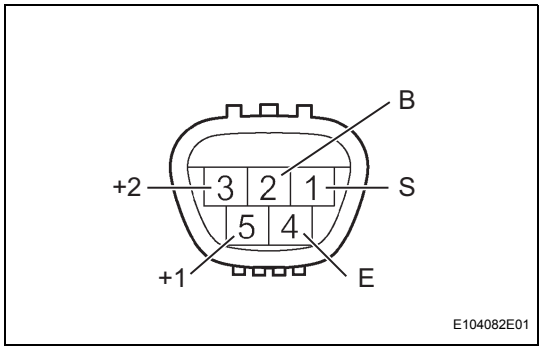

INSPECTION

1. INSPECT FRONT WIPER MOTOR

(a) Check the LO operation.

(1) Connect the positive (+) battery lead to terminal 5 (+1) of the connector and the negative (-) battery lead to terminal 4 (E), then check that the motor operates at low speed (LO).

Standard:

Motor operates at low speed (LO).

If the result is not as specified, replace the motor.

(b) Check the HI operation.

(1) Connect the positive (+) battery lead to terminal 3 (+2) of the connector and the negative (-) battery lead to terminal 4 (E), then check that the motor operates at high speed (HI).

Standard:

Motor operates at high speed (HI).

If the result is not as specified, replace the motor.

(c) Check the automatic stop operation.

(1) Connect the positive (+) battery lead to terminal 5 (+1) of the connector and the negative (-) battery lead to terminal 4 (E). With the motor operating at low speed (LO), disconnect terminal 5 (+1) to stop the wiper motor operation at any position other than the automatic stop position.

(2) Using SST, connect terminals 1 (S) and 5 (+1). Connect the positive (+) battery lead to terminal 2 (B) of the connector to restart the motor operation at low speed (LO).

SST 09843-18040

WW

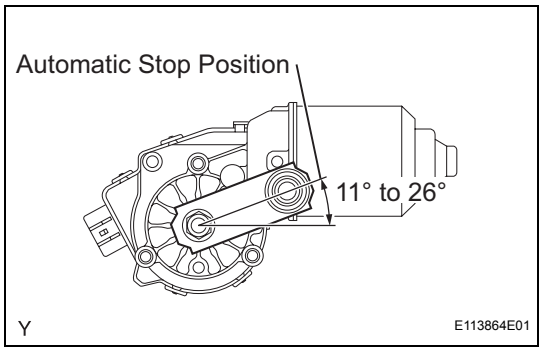

(3) Check that the motor stops automatically in the automatic stop position.
Standard:
Refer to the illustration.
If the result is not as specified, replace the motor assembly.

INSTALLATION

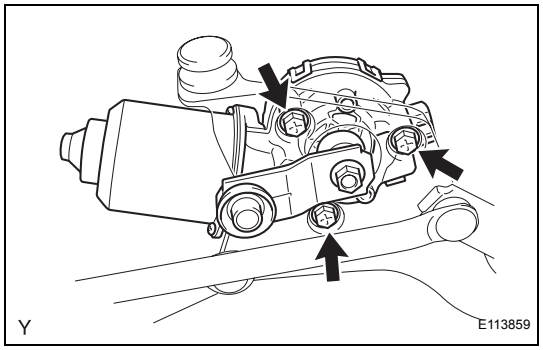

1. INSTALL FRONT WIPER MOTOR

(a) Install the front wiper motor with the 3 bolts.
Torque: 5.4 N*m (55 kgf*cm, 48 in.*lbf)

(b) Apply DENSO No. 50 grease to the crank arm pivot of the front wiper motor.

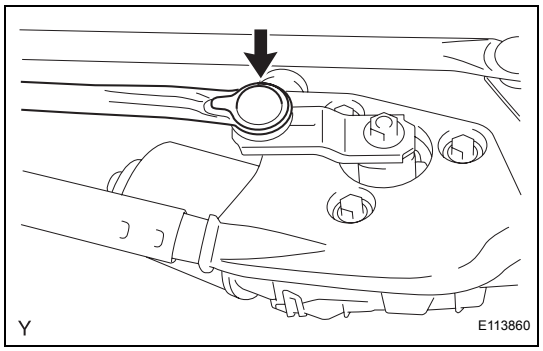

(c) Install the rod onto the crank arm pivot of the front wiper motor.

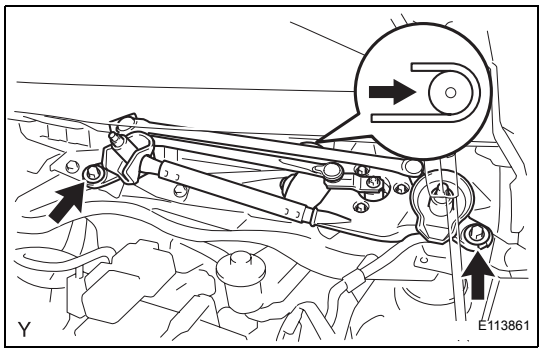

2. INSTALL FRONT WIPER MOTOR AND LINK

(a) Connect the connector.

(b) Slide the wiper link as shown in the illustration and engage the rubber pin with the body.

(c) Install the front wiper motor and link with the 2 bolts.
Torque: 5.5 N*m (56 kgf*cm, 49 in.*lbf)

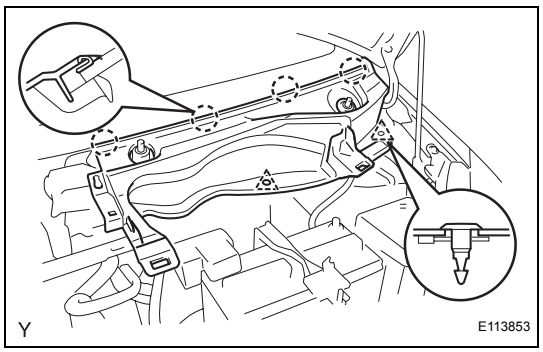

3. INSTALL COWL TOP VENTILATOR LOUVER LH

(a) Engage the 4 claws and install the cowl top ventilator louver LH.

(b) Install the 2 clips.

WW

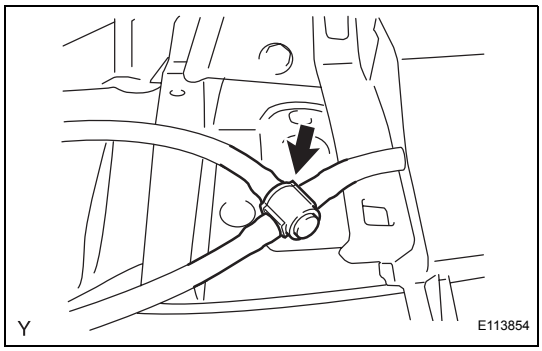

4. INSTALL COWL TOP VENTILATOR LOUVER SUB-ASSEMBLY

(a) Connect the washer hose.

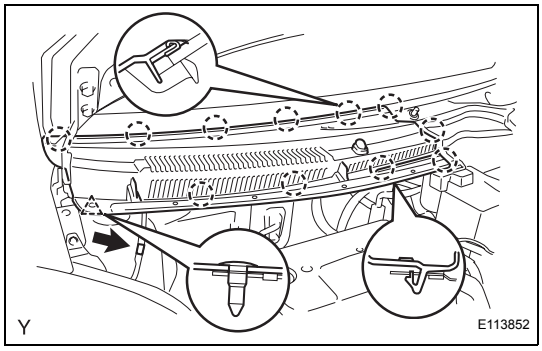

(b) Engage the 11 claws and install the cowl top ventilator louver sub-assembly.

(c) Install the clip.

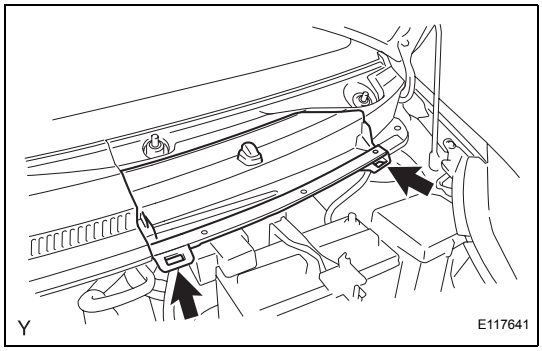

(d) Connect the washer hose.

(e) Engage the 2 hooks and install cowl top ventilator louver center No. 1.

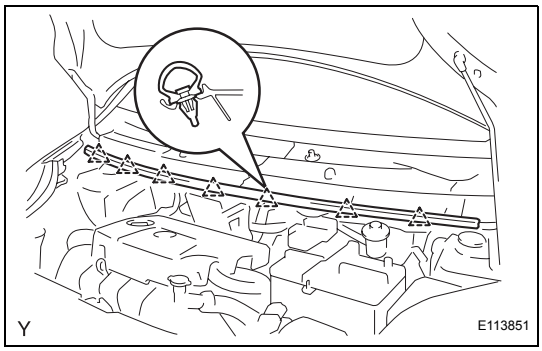

5. INSTALL HOOD TO COWL TOP SEAL

(a) Engage the 7 clips and install the hood to cowl top seal.

WW

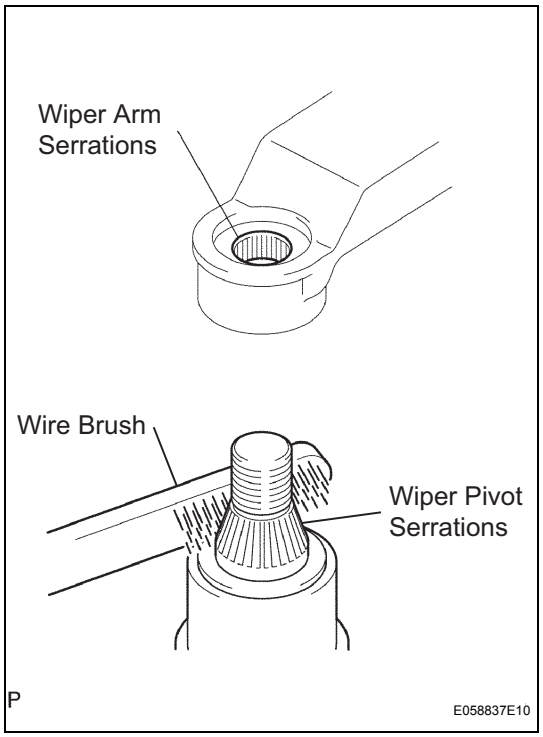

6. INSTALL FRONT WIPER ARM AND BLADE ASSEMBLY LH

(a) Scrape any metal powder off the serrated part of the wiper arm with a round file or the equivalent (when reinstalling).

(b) Clean the wiper pivot serrations with a wire brush.

(c) Operate the wiper, then stop the windshield wiper motor in the automatic stop position.

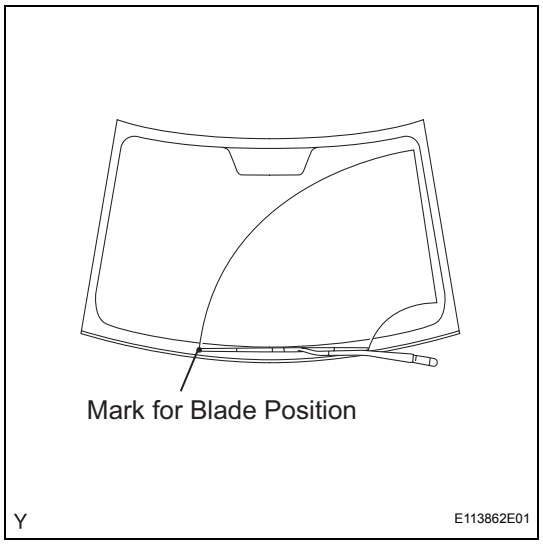

(d) Align the blade tip with the mark on the windshield glass, as shown in the illustration.

(e) Tighten the nut of the front wiper arm.
Torque: 26 N*m (265 kgf*cm, 19 ft.*lbf)

WW

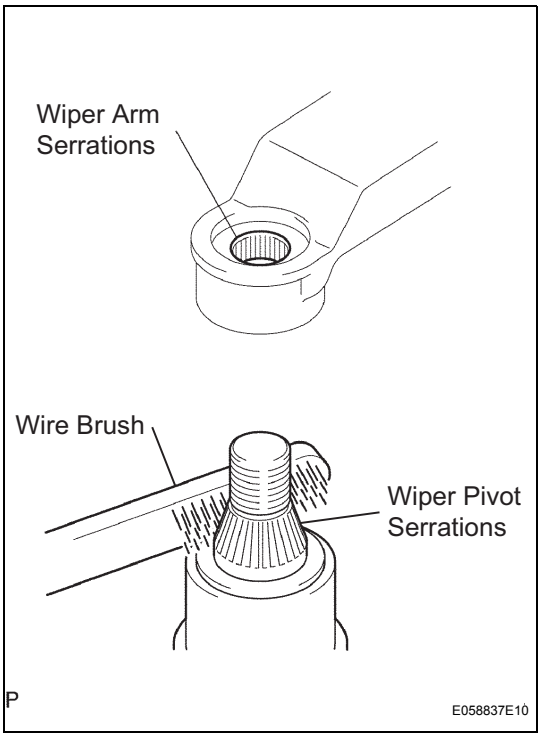

7. INSTALL FRONT WIPER ARM AND BLADE ASSEMBLY RH

(a) Scrape any metal powder off the serrated part of the wiper arm with a round file or the equivalent (when reinstalling).

(b) Clean the wiper pivot serrations with a wire brush.

(c) Operate the wiper, then stop the windshield wiper motor in the automatic stop position.

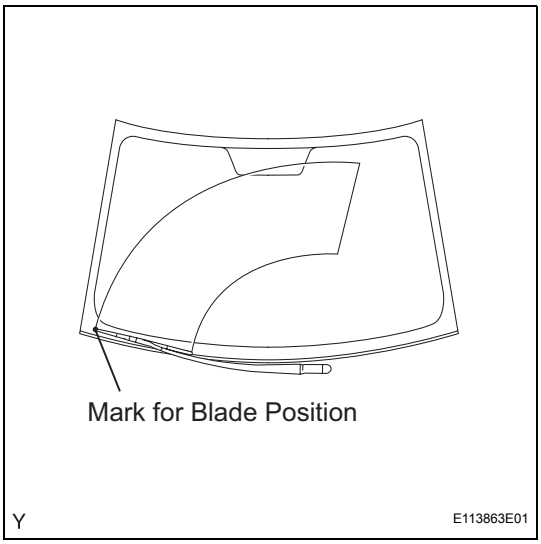

(d) Align the blade tip with the mark on the windshield glass, as shown in the illustration.

(e) Tighten the nut of the front wiper arm.
Torque: 26 N*m (265 kgf*cm, 19 ft.*lbf)

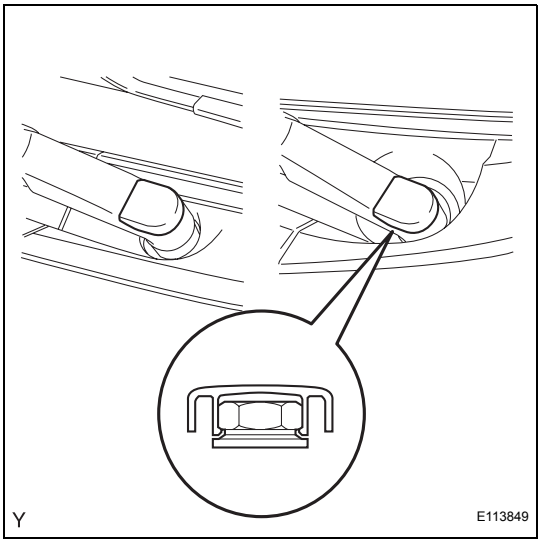

8. INSTALL FRONT WIPER ARM HEAD CAP

(a) Engage the claw and install the 2 front wiper arm head caps.

9. CONNECT CABLE TO NEGATIVE BATTERY TERMINAL
Torque: 5.4 N*m (55 kgf*cm, 48 in.*lbf)

WW

FRONT WIPER RUBBER

COMPONENTS

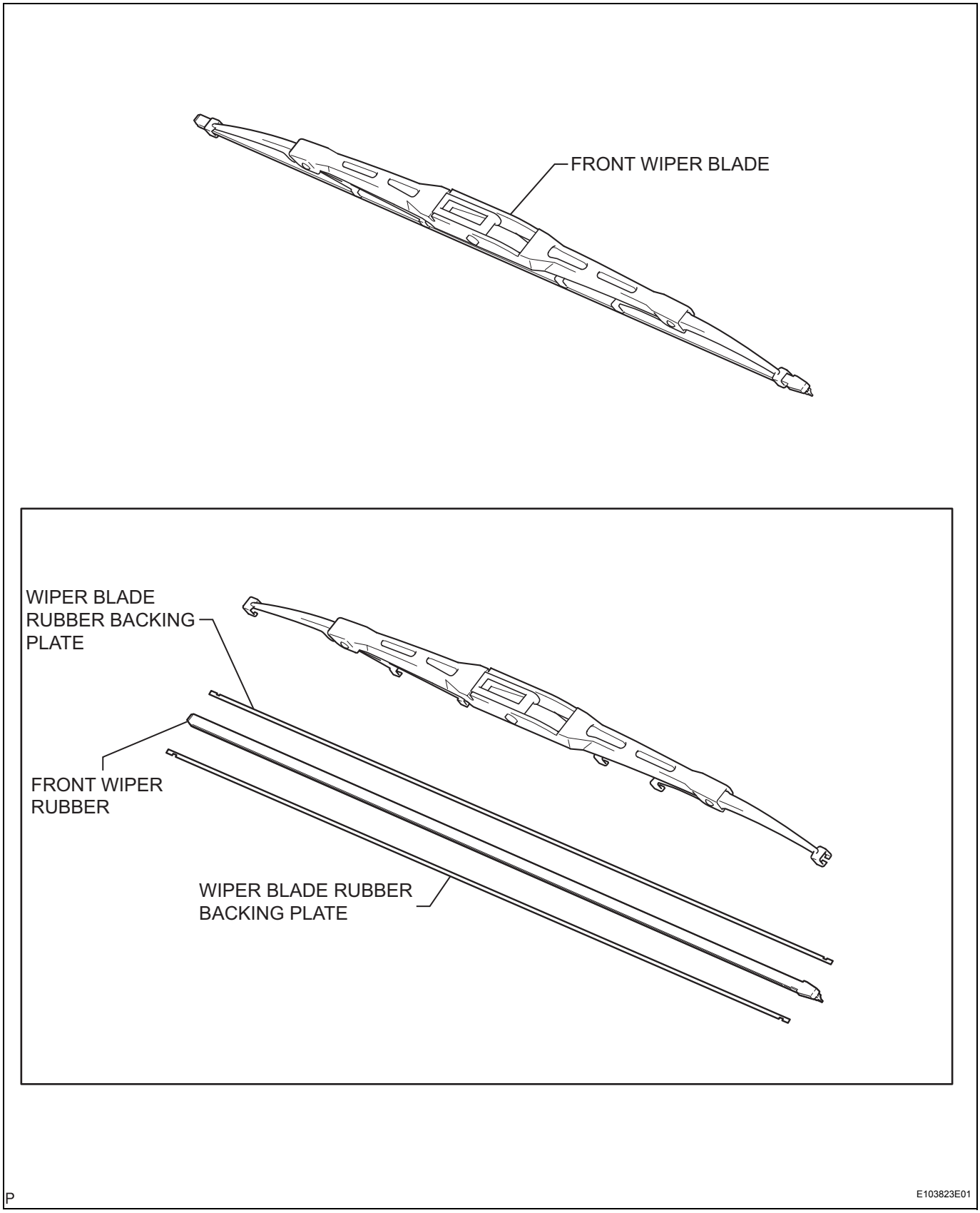

REMOVAL

HINT:
- Use the same procedures for both the RH and LH sides.
- The procedure described below is for the LH side.

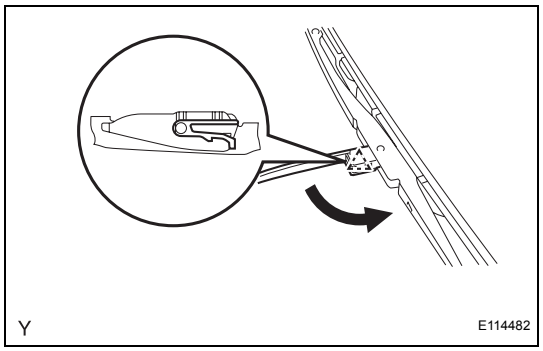

1. REMOVE FRONT WIPER BLADE

(a) Disengage the claw as shown in the illustration.
NOTICE:
Do not fold the wiper arm with the wiper blade removed. The arm tip may damage the windshield surface.

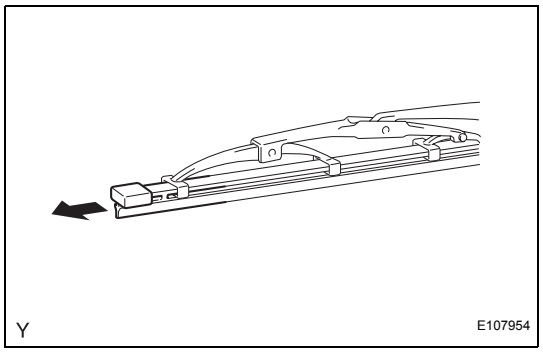

2. REMOVE FRONT WIPER RUBBER

(a) Remove the wiper rubber from the wiper blade.

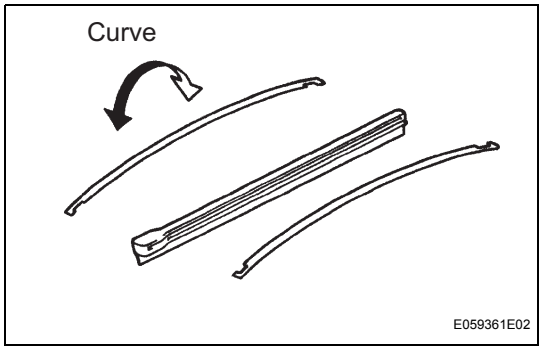

(b) Remove the 2 wiper rubber backing plates from the wiper rubber.

INSTALLATION

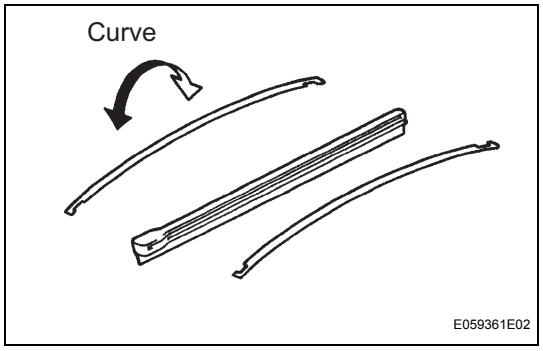

1. INSTALL FRONT WIPER RUBBER

(a) Install the 2 wiper rubber backing plates onto the wiper rubber.
NOTICE:
Install the backing plates facing the correct direction.

WW

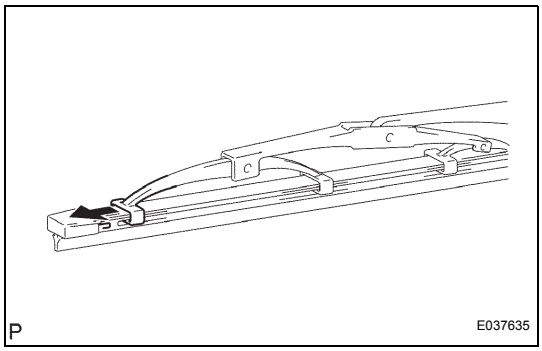

(b) Install the wiper rubber with its head portion (swelled portion) facing the arm bearing.
NOTICE:
Push the wiper blade into the grooves of the wiper rubber to attach it completely.

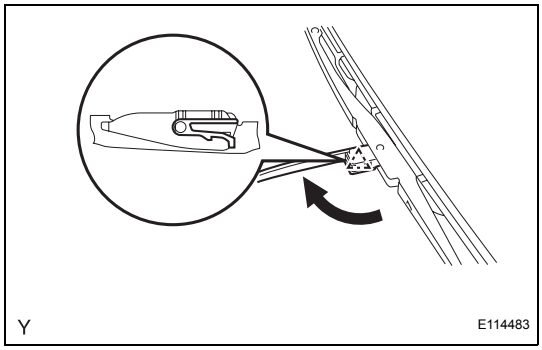

2. INSTALL FRONT WIPER BLADE

(a) Engage the claw and install the wiper blade.

REAR WIPER MOTOR (for Hatchback)

COMPONENTS

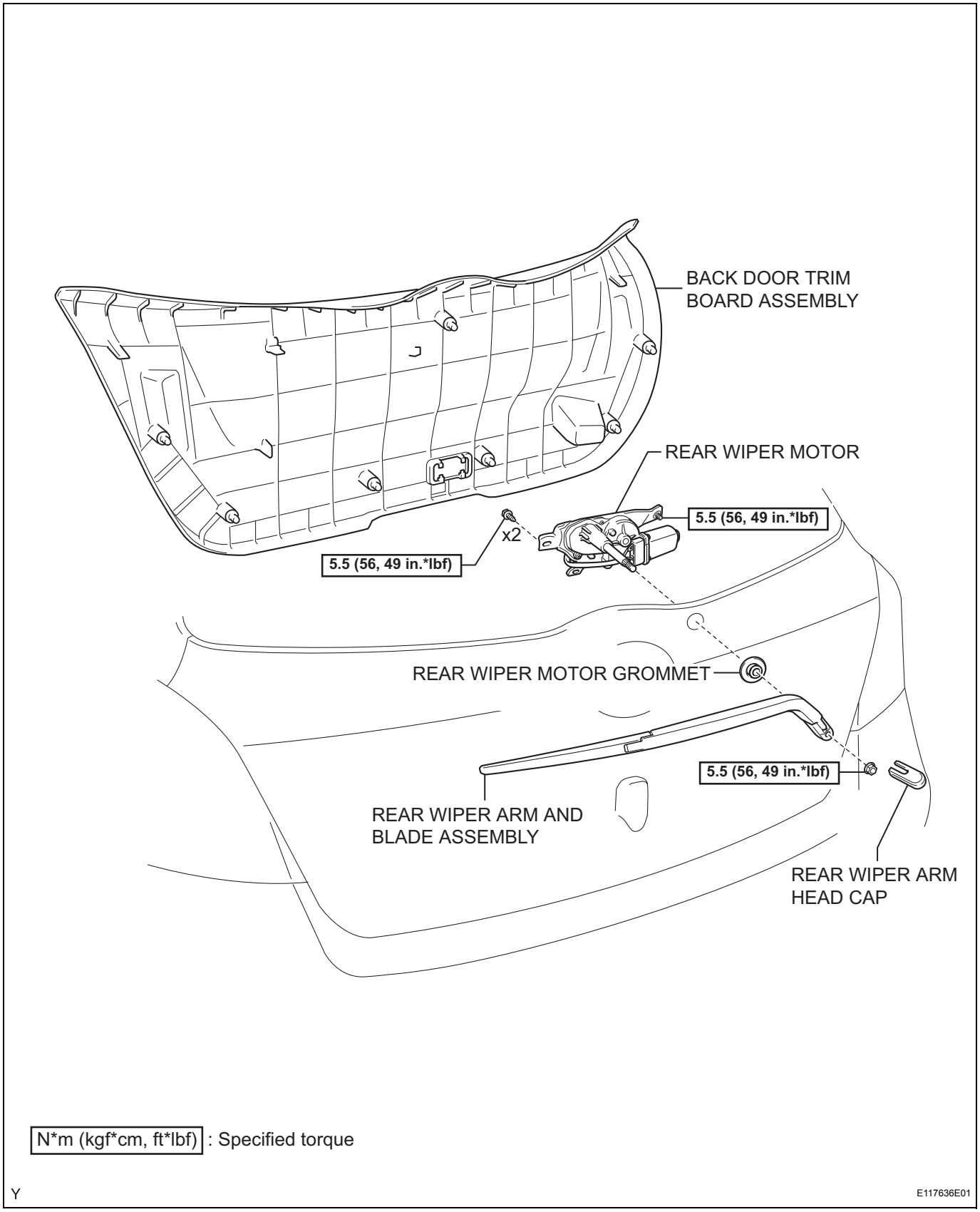

WW

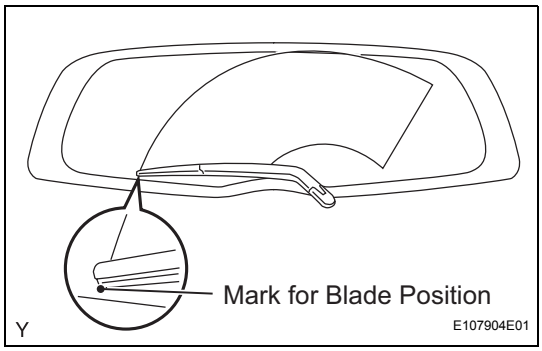

ON-VEHICLE INSPECTION

1. INSPECT REAR WIPER MOTOR

(a) Check the automatic stop position.

(1) Operate the rear wiper motor, then stop the operation.

(2) Check the automatic stop position when the rear wiper motor operation has stopped.

Standard:

Rear wiper arm stops in the position shown in the illustration.

REMOVAL

1. DISCONNECT CABLE FROM NEGATIVE BATTERY TERMINAL

2. REMOVE BACK DOOR TRIM BOARD ASSEMBLY (See page ED-142)

3. REMOVE REAR WIPER ARM AND BLADE ASSEMBLY

(a) Remove the rear wiper arm head cap.

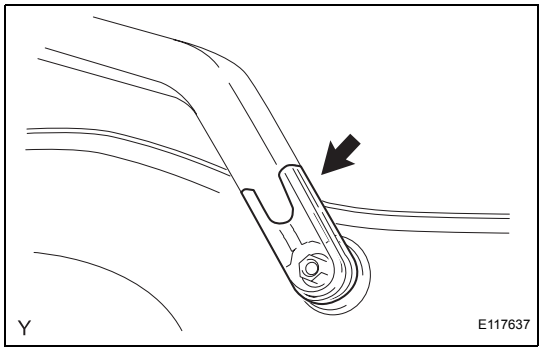

(b) Remove the nut and rear wiper arm and blade.

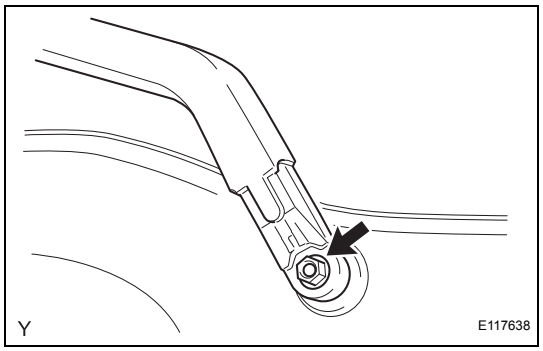

4. REMOVE REAR WIPER MOTOR GROMMET

(a) Remove the rear wiper motor grommet.

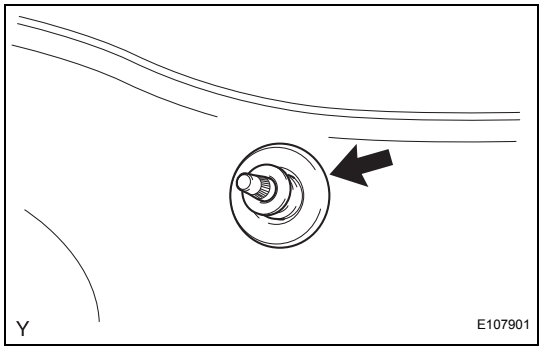

5. REMOVE REAR WIPER MOTOR

(a) Disconnect the connector.

(b) Loosen bolt A.

NOTICE:
Do not try to remove the bolt since it is integrated with the motor.

(c) Remove bolt B and the rear wiper motor.

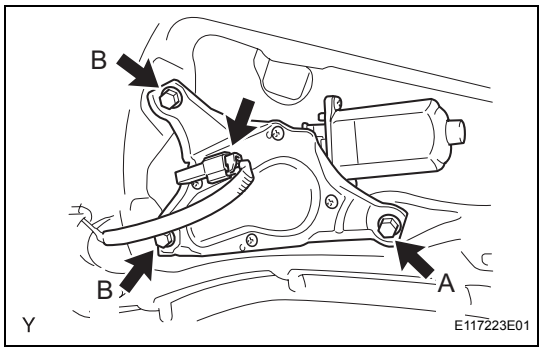

WW

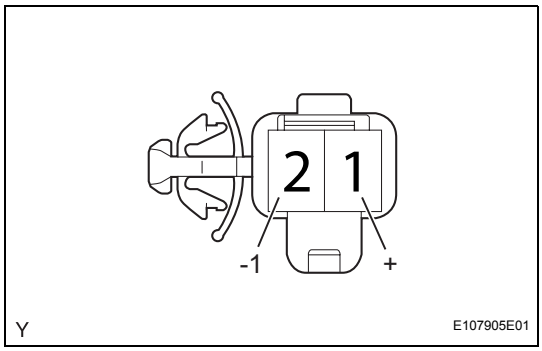

INSPECTION

1. INSPECT REAR WIPER MOTOR

(a) Check the operation.

(1) Connect the positive (+) battery lead to terminal 1 (+) and the negative (-) battery lead to terminal 2 (-1), and check that the rear wiper motor operates.

Standard:

The rear wiper motor operates.

NOTICE:

Check that the body ground is connected.

If the result is not as specified, replace the motor.

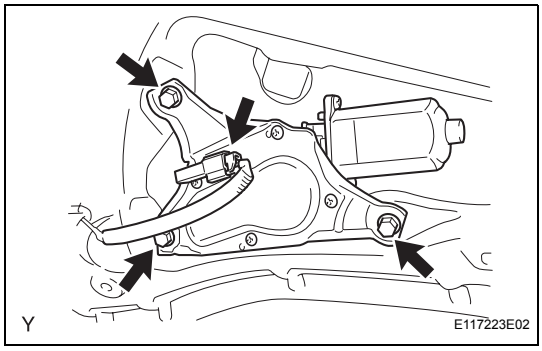

INSTALLATION

1. INSTALL REAR WIPER MOTOR

(a) Install the rear wiper motor with the 3 bolts.

Torque: 5.5 N*m (56 kgf*cm, 49 in.*lbf)

(b) Connect the connector.

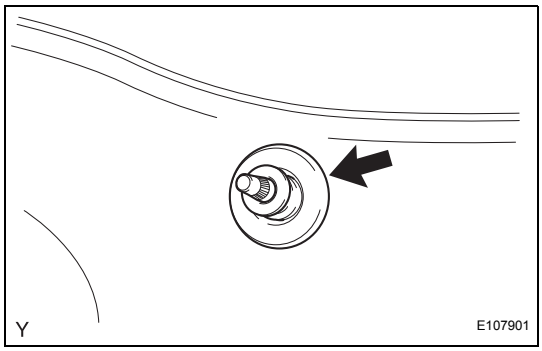

2. INSTALL REAR WIPER MOTOR GROMMET

(a) Install the rear wiper motor grommet.

WW

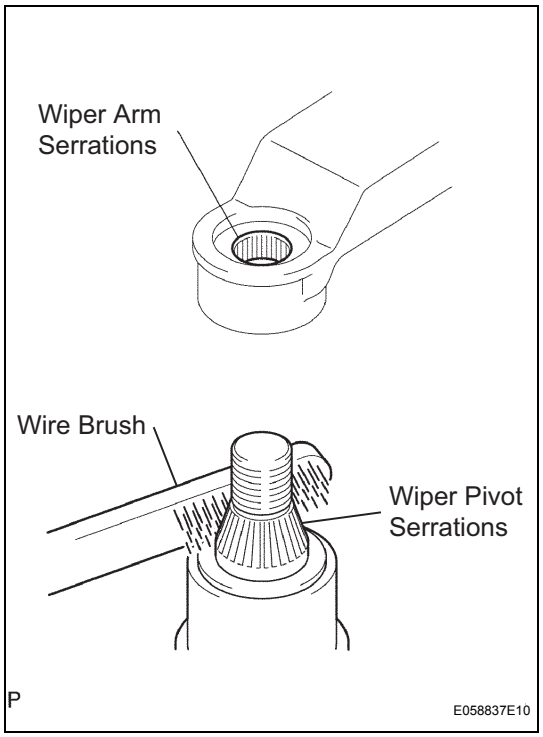

3. INSTALL REAR WIPER ARM AND BLADE ASSEMBLY

(a) Scrape any metal powder off the serrated part of the wiper arm with a round file or the equivalent (when reinstalling).

(b) Clean the wiper pivot serrations with a wire brush.

(c) Operate the wiper, then stop the windshield wiper motor in the automatic stop position.

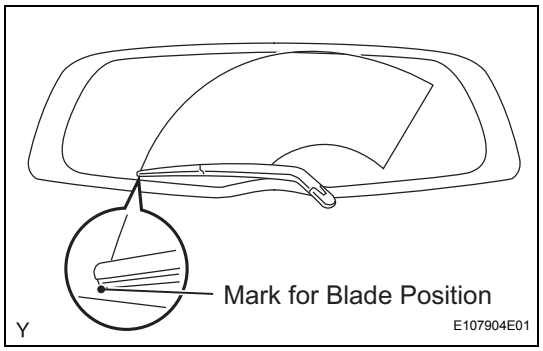

(d) Install the rear wiper arm into the position shown in the illustration with the nut.
Torque: 5.5 N*m (56 kgf*cm, 49 in.*lbf)
HINT:
Hold the arm hinge down by hand while tightening the nut.

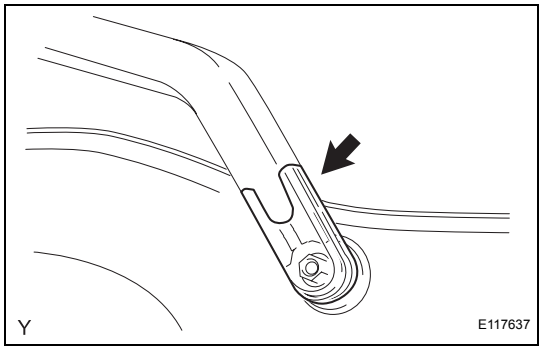

(e) Install the rear wiper arm head cap.

4. REMOVE BACK DOOR TRIM BOARD ASSEMBLY (See page ED-146)

5. CONNECT CABLE TO NEGATIVE BATTERY TERMINAL
Torque: 5.4 N*m (55 kgf*cm, 48 in.*lbf)

WW

REAR WIPER RUBBER (for Hatchback)

COMPONENTS

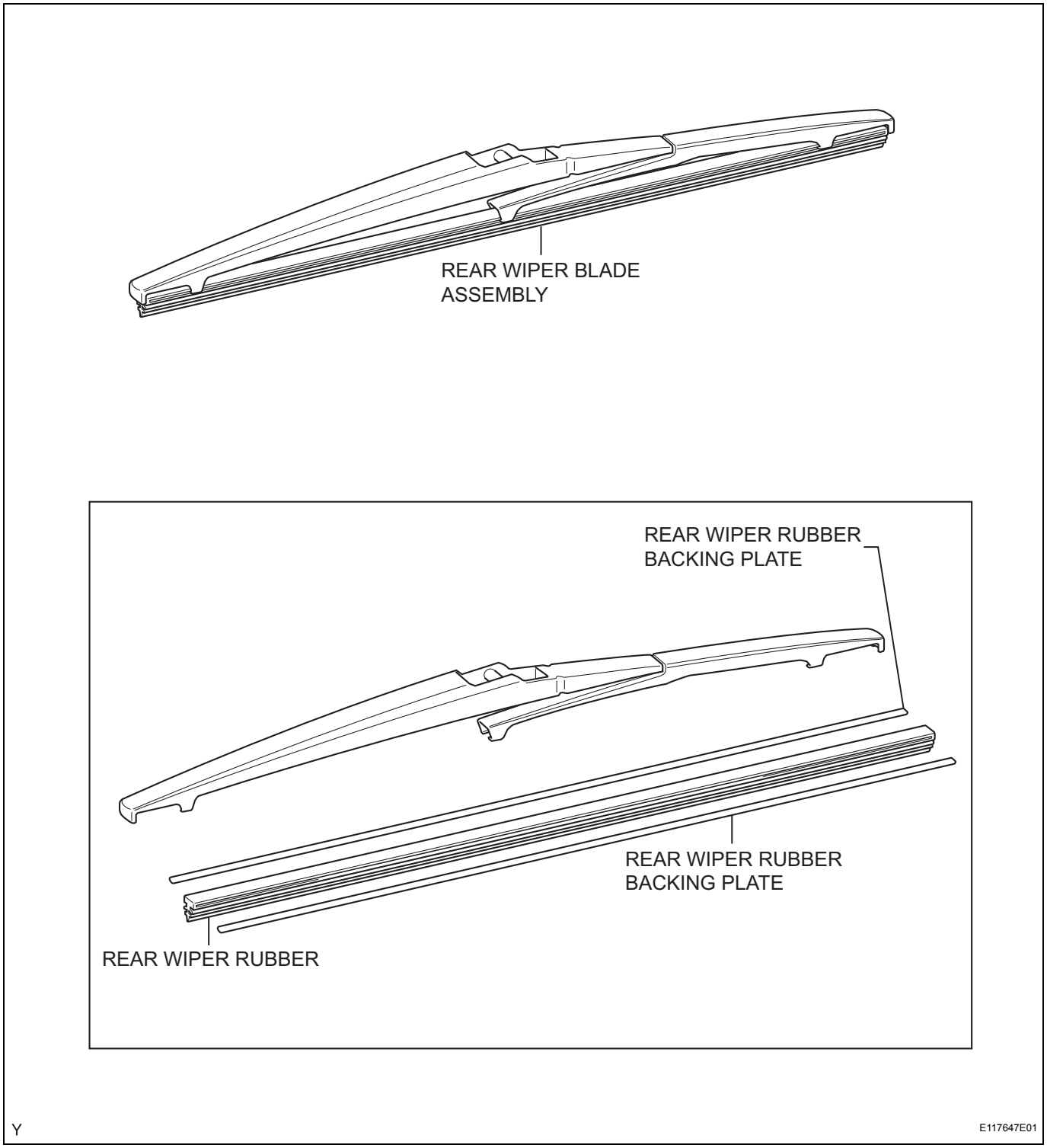

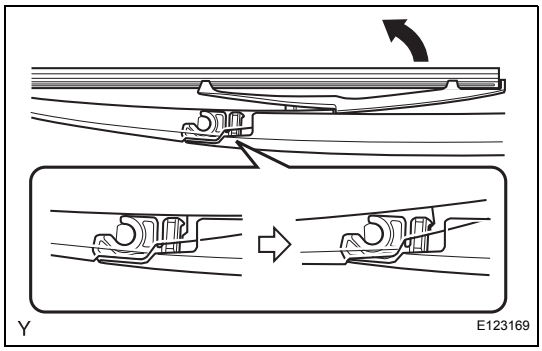

REMOVAL

1. REMOVE REAR WIPER BLADE ASSEMBLY

(a) Raise the rear wiper blade to the position shown in the illustration, where the meshing of the claw disengages making a clicking sound.
NOTICE:
Do not break the claw.

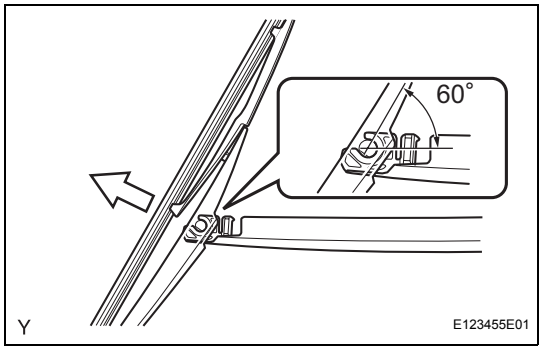

(b) Pull the rear wiper blade straight away from the wiper arm toward the left side of the vehicle.
NOTICE:
Do not bend the rear wiper arm with the rear wiper blade removed, as the arm tip could damage the windshield surface.

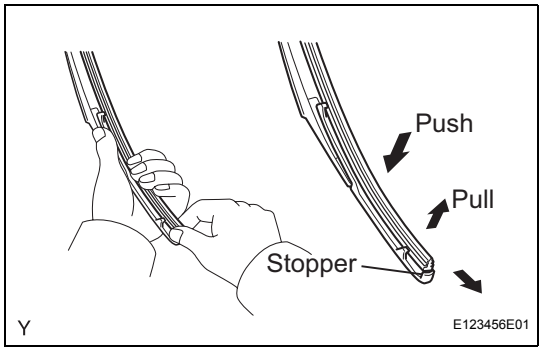

2. REMOVE REAR WIPER RUBBER

(a) Pull the end of the wiper rubber protruding from the blade stopper as shown in the illustration.
NOTICE:
Do not pull out the wiper rubber forcibly. Otherwise, the backing plates will be deformed or the blade claw will be damaged.
HINT:
Pushing the rubber from the end toward the middle of the rear wiper blade allows it to be removed more easily.

(b) Remove the 2 wiper rubber backing plates from the wiper rubber.

INSTALLATION

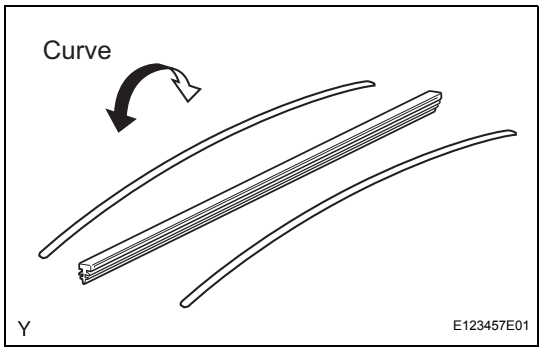

1. INSTALL REAR WIPER RUBBER

(a) Install the 2 wiper rubber backing plates onto the wiper rubber.
NOTICE:
Install the backing plates facing the correct direction.

WW

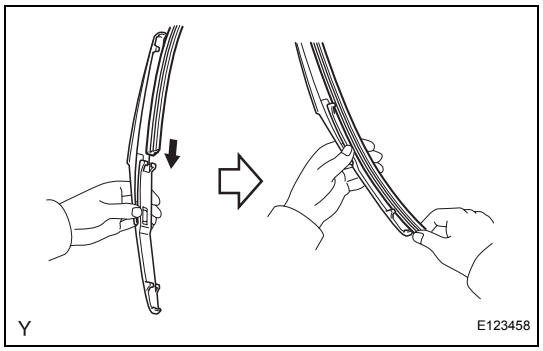

(b) Insert the rear wiper rubber from the claw position of the middle of the rear wiper blade to the end.

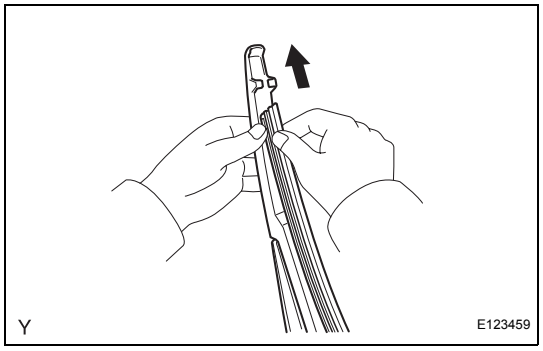

(c) After passing the rear wiper rubber through the rear end side claw, allow it to protrude from the rear end stopper and slide it through the front tip side claw.

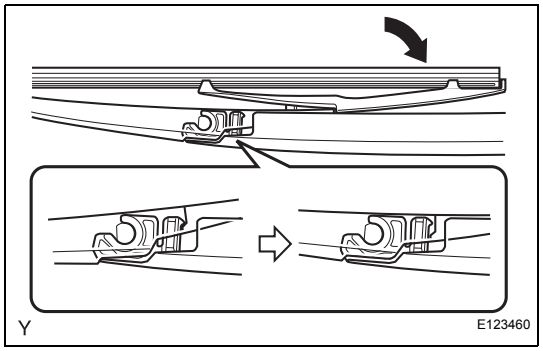

2. INSTALL REAR WIPER BLADE ASSEMBLY

(a) Engage the claw and install the wiper blade.

WIPER SWITCH (for Sedan)

COMPONENTS

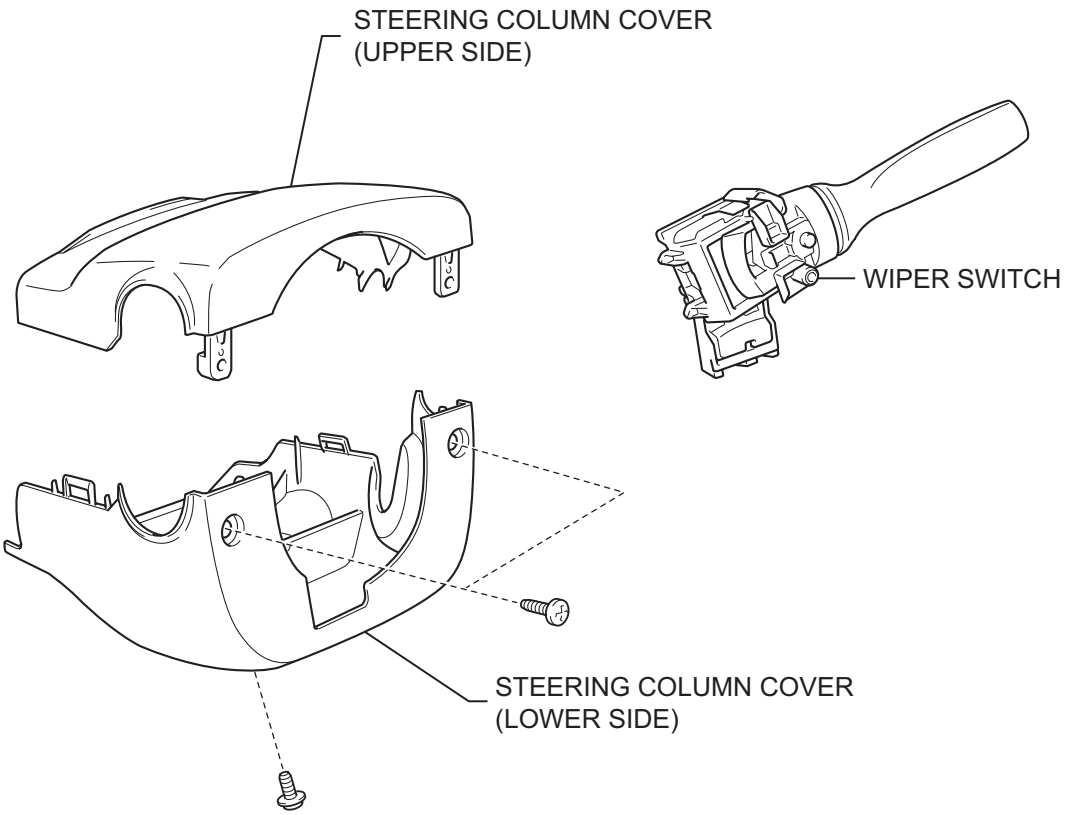

Y

E127794E01

REMOVAL

1. **DISCONNECT CABLE FROM NEGATIVE BATTERY TERMINAL**
2. **REMOVE STEERING COLUMN COVER (See page SR-12)**
3. **REMOVE WIPER SWITCH**
   (a) Disconnect the 2 connectors.
   (b) Using a screwdriver with its tip wrapped in protective tape, disengage the claw and remove the wiper switch.
   NOTICE:
   Do not press the claw too hard, as it may be damaged.

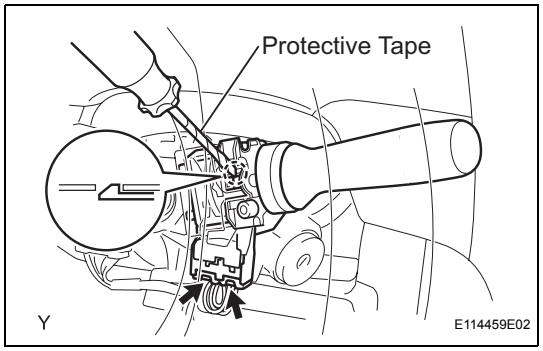

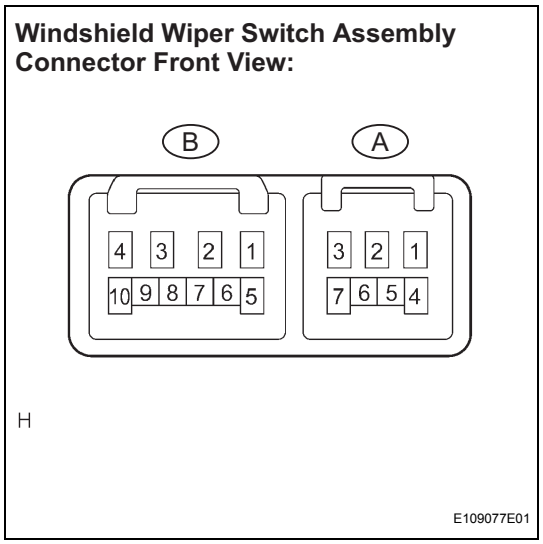

INSPECTION

1. **INSPECT WIPER SWITCH**
   (a) Check the resistance.
   (1) Measure the resistance and check the results in accordance with the value(s) in the tables below.
   Standard Resistance

Tester Connection	Condition	Specified Condition
+B (B-2) - +1 (B-3)	MIST	Below 1 Ω
+S (B-1) - +1 (B-3)	OFF	Below 1 Ω
+S (B-1) - +1 (B-3)	INT	Below 1 Ω
+B (B-2) - +1 (B-3)	LO	Below 1 Ω
+B (B-2) - +2 (B-4)	HI	Below 1 Ω

If the result is not as specified, replace the wiper switch.
Standard Resistance

Tester Connection	Condition	Specified Condition
EW (A-2) - WF (A-3)	OFF	10 kΩ or higher
EW (A-2) - WF (A-3)	ON	Below 1 Ω

If the result is not as specified, replace the wiper switch.
If the result is not as specified, replace the wiper switch.
   (b) Check the intermittent operation.
   (1) Connect the positive (+) voltmeter terminal to terminal 3 (+1) of the B connector and the negative (-) voltmeter terminal to terminal 2 (EW) of the A connector.
   (2) Connect the positive (+) battery lead to terminal 2 (+B) of the B connector and the negative (-) battery lead to terminals 2 (EW) of the A connector and 1 (+S) of the B connector.
   (3) Turn the wiper switch to the INT position.

(4) Connect the positive (+) battery lead to terminal 1 (+S) of the B connector for 5 seconds.
(5) Connect the negative (-) battery lead to terminal 1 (+S) of the B connector. Operate the intermittent wiper relay and check the voltage between terminals 3 (+1) of the B connector and 2 (EW) of the A connector.
Standard:
Refer to the illustration below.

Voltage between terminals 3 (+1) of the B connector and 2 (EW) of the A connector	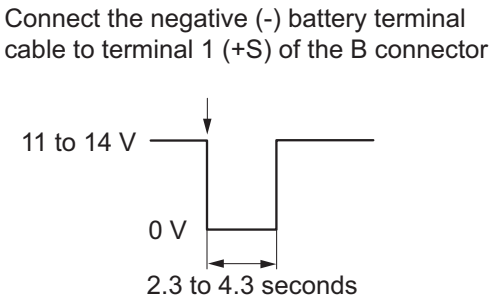
Y	E129662E01

If the result is not as specified, replace the windshield wiper switch.

(c) Check the operation (front washer).
(1) Turn the wiper switch off.
(2) Connect the positive (+) battery lead to terminal 2 (+B) of the B connector and the negative (-) battery lead to terminals 1 (+S) of the B connector and 2 (EW) of the A connector.
(3) Connect the positive (+) voltmeter terminal to terminal 3 (+1) of the B connector and the negative (-) voltmeter terminal to terminal 2 (EW) of the A connector. Turn the washer switch on and off, and check the voltage between terminals 3 (+1) of the B connector and 2 (EW) of the A connector.

Voltage between terminals 3 (+1) of the B connector and 2 (EW) of the A connector	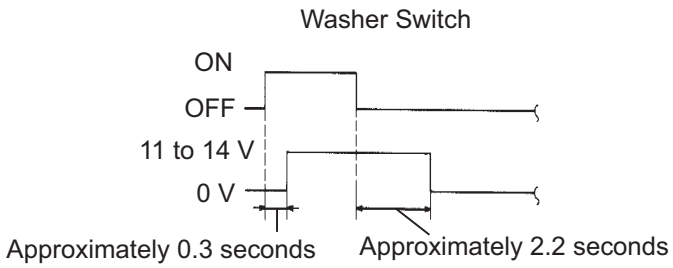
	E129663E01

If the result is not as specified, replace the windshield wiper switch.

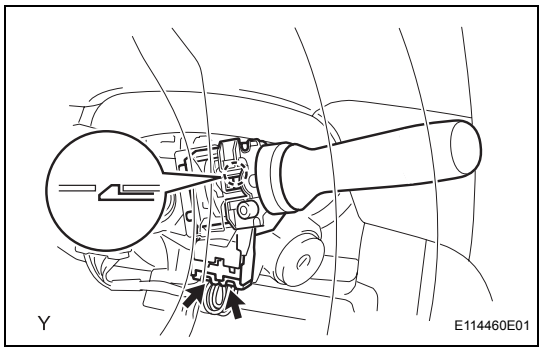

INSTALLATION

1. **INSTALL WIPER SWITCH**
   (a) Engage the claw and install the windshield wiper switch.
   (b) Connect the 2 connectors.
2. **INSTALL STEERING COLUMN COVER (See page SR-22)**
3. **CONNECT CABLE TO NEGATIVE BATTERY TERMINAL**
   Torque: 5.4 N*m (55 kgf*cm, 48 in.*lbf)

WIPER SWITCH (for Hatchback)

COMPONENTS

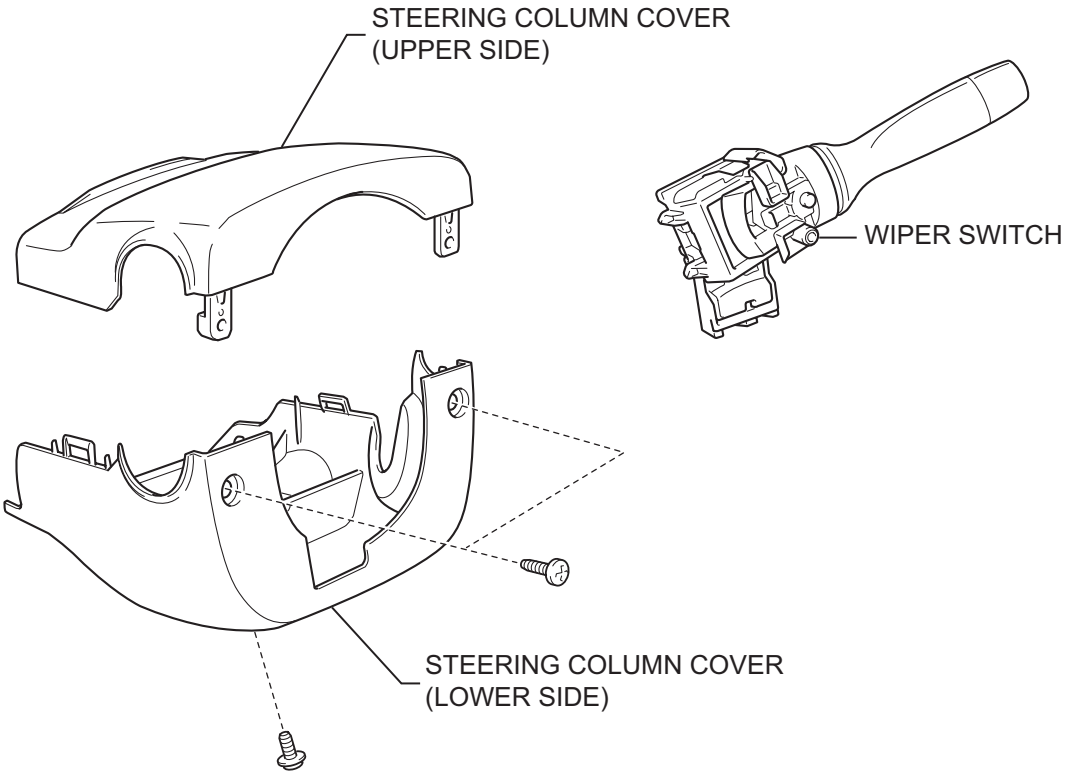

Y

E117224E01

REMOVAL

1. **DISCONNECT CABLE FROM NEGATIVE BATTERY TERMINAL**
2. **REMOVE STEERING COLUMN COVER (See page SR-30)**
3. **REMOVE WIPER SWITCH**
   (a) Disconnect the 2 connectors.
   (b) Using a screwdriver with its tip wrapped in protective tape, disengage the claw and remove the wiper switch.
   NOTICE:
   Do not press the claw too hard, as it may be damaged.

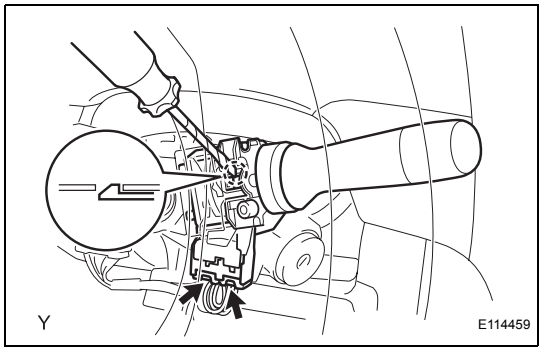

INSPECTION

1. **INSPECT WIPER SWITCH**
   (a) Check the resistance.
   (1) Measure the resistance and check the results in accordance with the value(s) in the tables below.
   Standard Resistance:
   Front Wiper Switch

Windshield Wiper Switch Assembly Connector Front View:

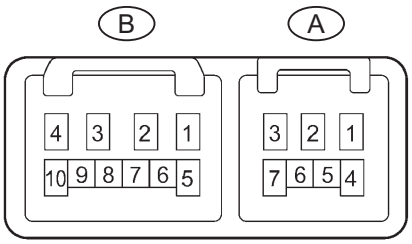

Tester Connection	Condition	Specified Condition
+B (B-2) - +1 (B-3)	MIST	Below 1 Ω
+S (B-1) - +1 (B-3)	OFF	Below 1 Ω
+S (B-1) - +1 (B-3)	INT	Below 1 Ω
+B (B-2) - +1 (B-3)	LO	Below 1 Ω
+B (B-2) - +2 (B-4)	HI	Below 1 Ω

If the result is not as specified, replace the wiper switch.

Standard Resistance:
Front Washer Switch

Tester Connection	Condition	Specified Condition
EW (A-2) - WF (A-3)	OFF	10 kΩ or higher
EW (A-2) - WF (A-3)	ON	Below 1 Ω

If the result is not as specified, replace the wiper switch.

Standard Resistance:
Rear Wiper and Washer Switch

Tester Connection	Condition	Specified Condition
EW (A-2) - WR (B-5)	WASH (Rear wiper switch OFF)	Below 1 Ω
EW (A-2) - WR (B-5) EW (A-2) - +1R (A-7)	OFF	10 kΩ or higher
EW (A-2) - +1R (A-7)	ON	Below 1 Ω
EW (A-2) - WR (B-5) EW (A-2) - +1R (A-7) +1R (A-7) - WR (B-5)	WASH (Rear wiper switch ON)	Below 1 Ω

If the result is not as specified, replace the wiper switch.

(b) Check the intermittent operation.
  (1) Connect the positive (+) voltmeter terminal to terminal 3 (+1) of the B connector and the negative (-) voltmeter terminal to terminal 2 (EW) of the A connector.
  (2) Connect the positive (+) battery lead to terminal 2 (+B) of the B connector and the negative (-) battery lead to terminals 2 (EW) of the A connector and 1 (+S) of the B connector.
  (3) Turn the wiper switch to the INT position.
  (4) Connect the positive (+) battery lead to terminal 1 (+S) of the B connector for 5 seconds.
  (5) Connect the negative (-) battery lead to terminal 1 (+S) of the B connector. Operate the intermittent wiper relay and check the voltage between terminals 3 (+1) of the B connector and 2 (EW) of the A connector.
  Standard:
  Refer to the illustration below.

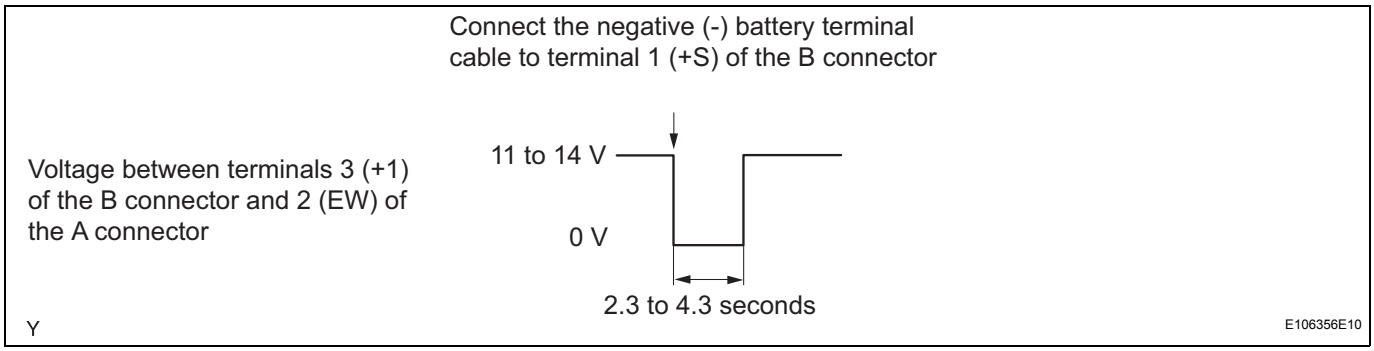

If the result is not as specified, replace the windshield wiper switch.

(c) Check the operation (front washer).
  (1) Turn the wiper switch off.
  (2) Connect the positive (+) battery lead to terminal 2 (+B) of the B connector and the negative (-) battery lead to terminals 1 (+S) of the B connector and 2 (EW) of the A connector.

WW

(3) Connect the positive (+) voltmeter terminal to terminal 3 (+1) of the B connector and the negative (-) voltmeter terminal to terminal 2 (EW) of the A connector. Turn the washer switch on and off, and check the voltage between terminals 3 (+1) of the B connector and 2 (EW) of the A connector.

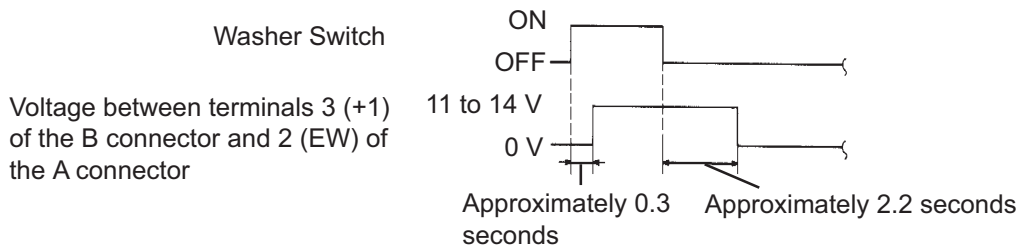

E106382E06

If the result is not as specified, replace the windshield wiper switch.

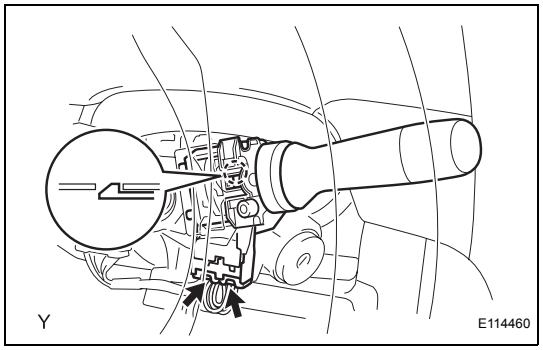

INSTALLATION

1. **INSTALL WIPER SWITCH**
   (a) Engage the claw and install the windshield wiper switch.
   (b) Connect the 2 connectors.
2. **INSTALL STEERING COLUMN COVER (See page SR-40)**
3. **CONNECT CABLE TO NEGATIVE BATTERY TERMINAL**
   Torque: 5.4 N*m (55 kgf*cm, 48 in.*lbf)

WASHER MOTOR (for Sedan)

COMPONENTS

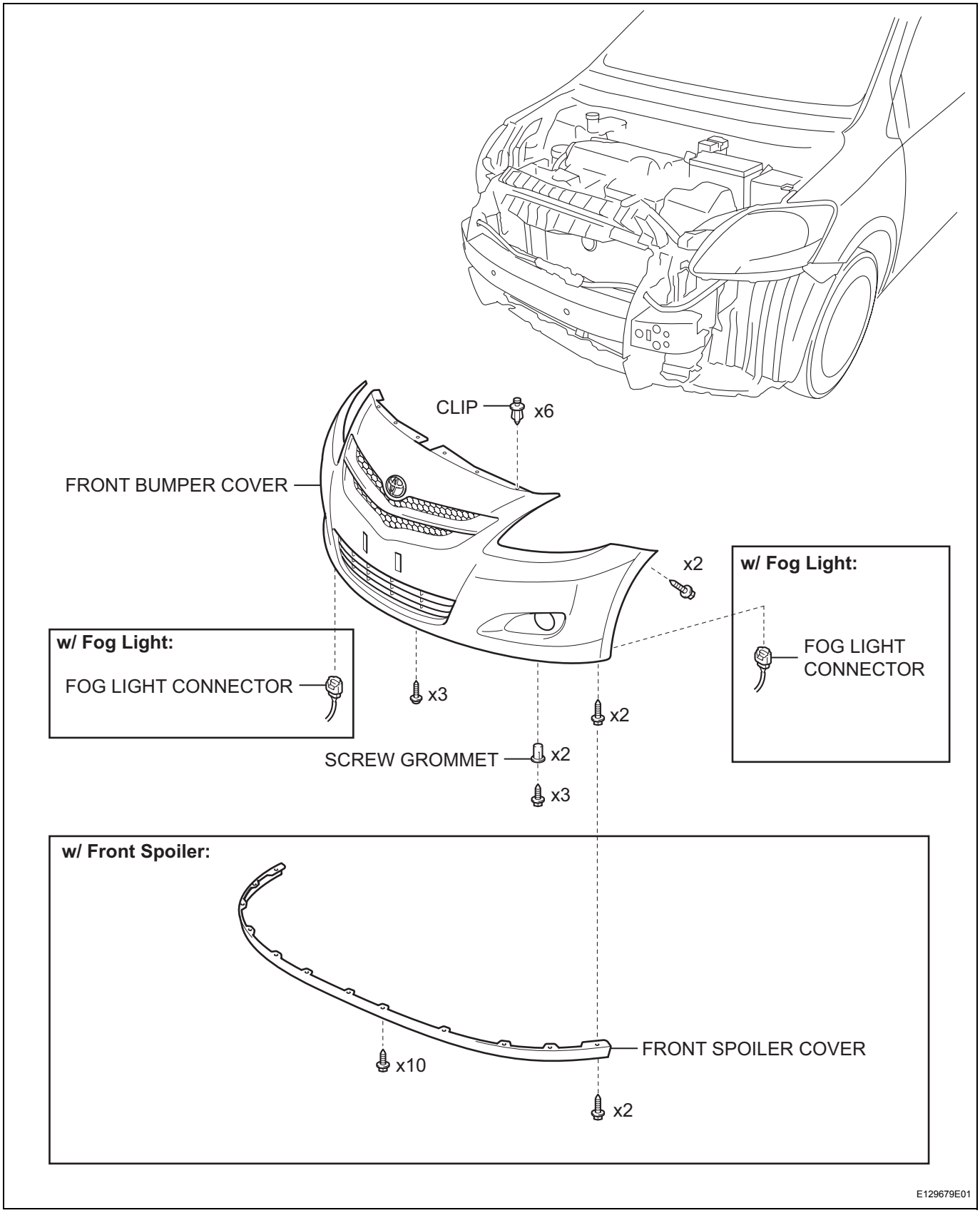

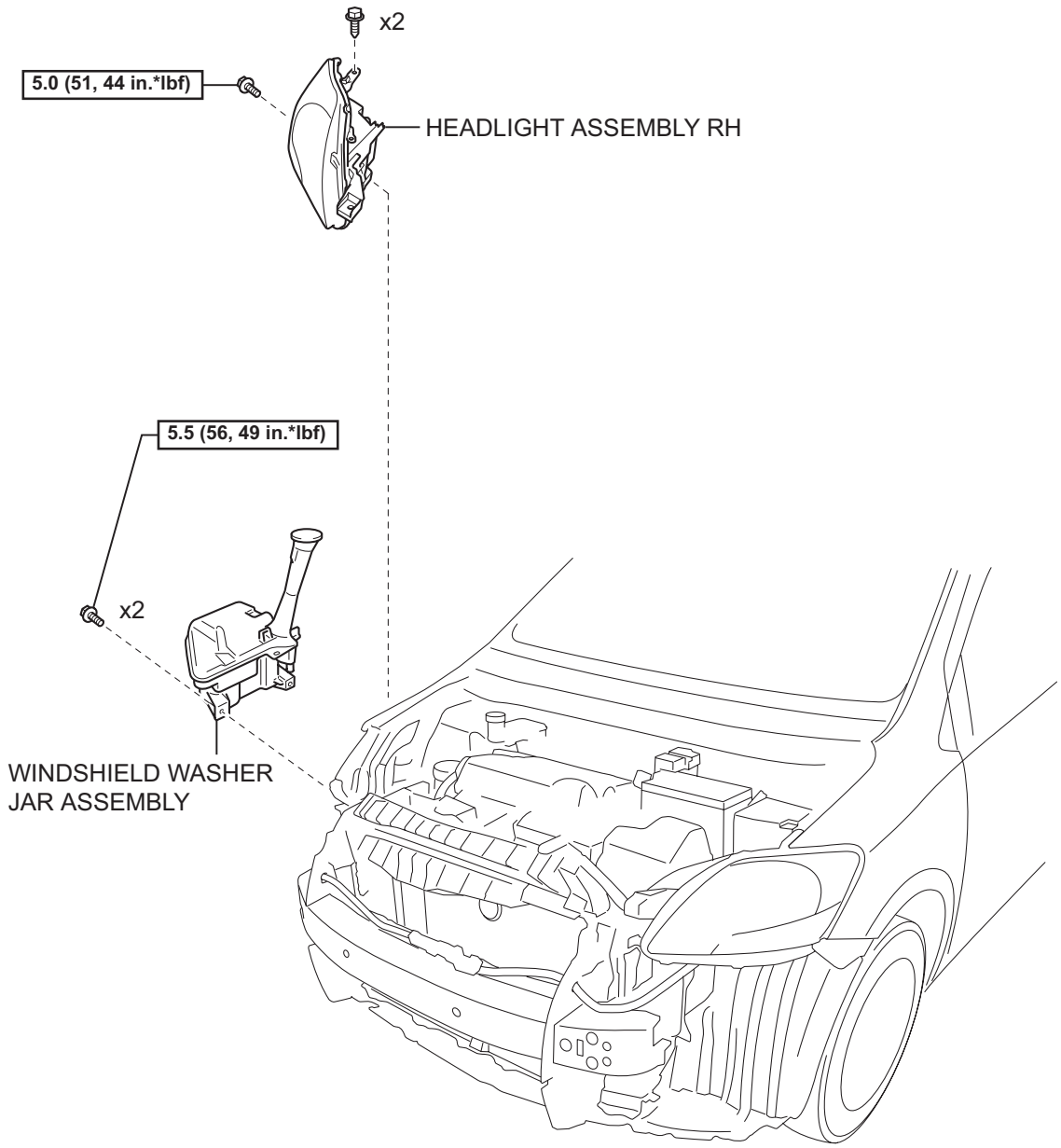

N*m (kgf*cm, ft*lbf) : Specified torque

Y

E129620E01

WW

w/o Washer Level Warning Switch:

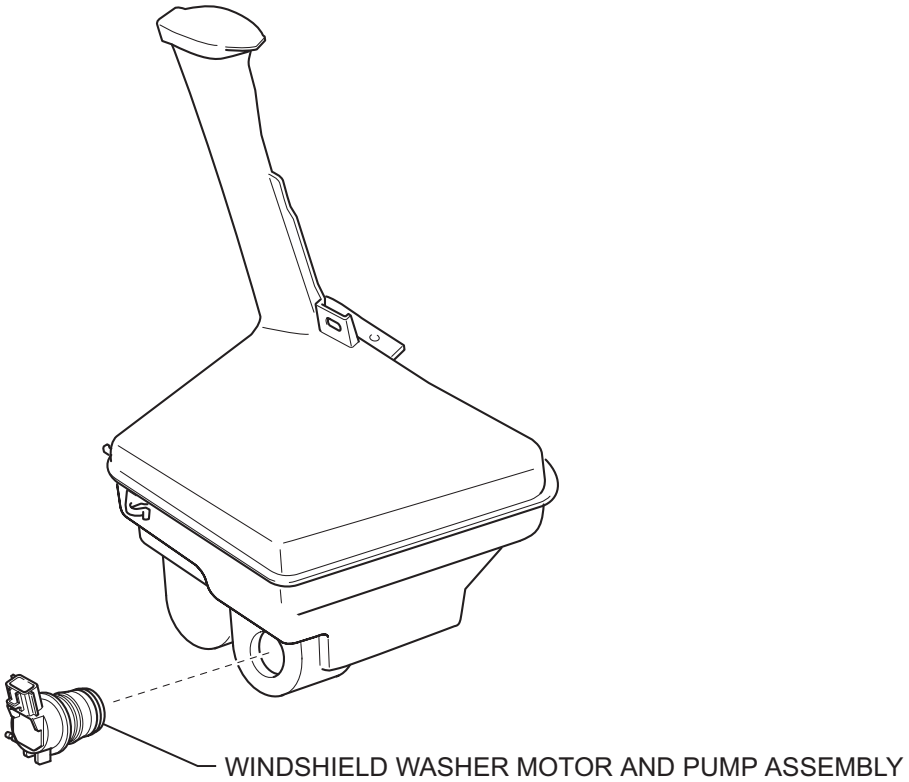

w/ Washer Level Warning Switch:

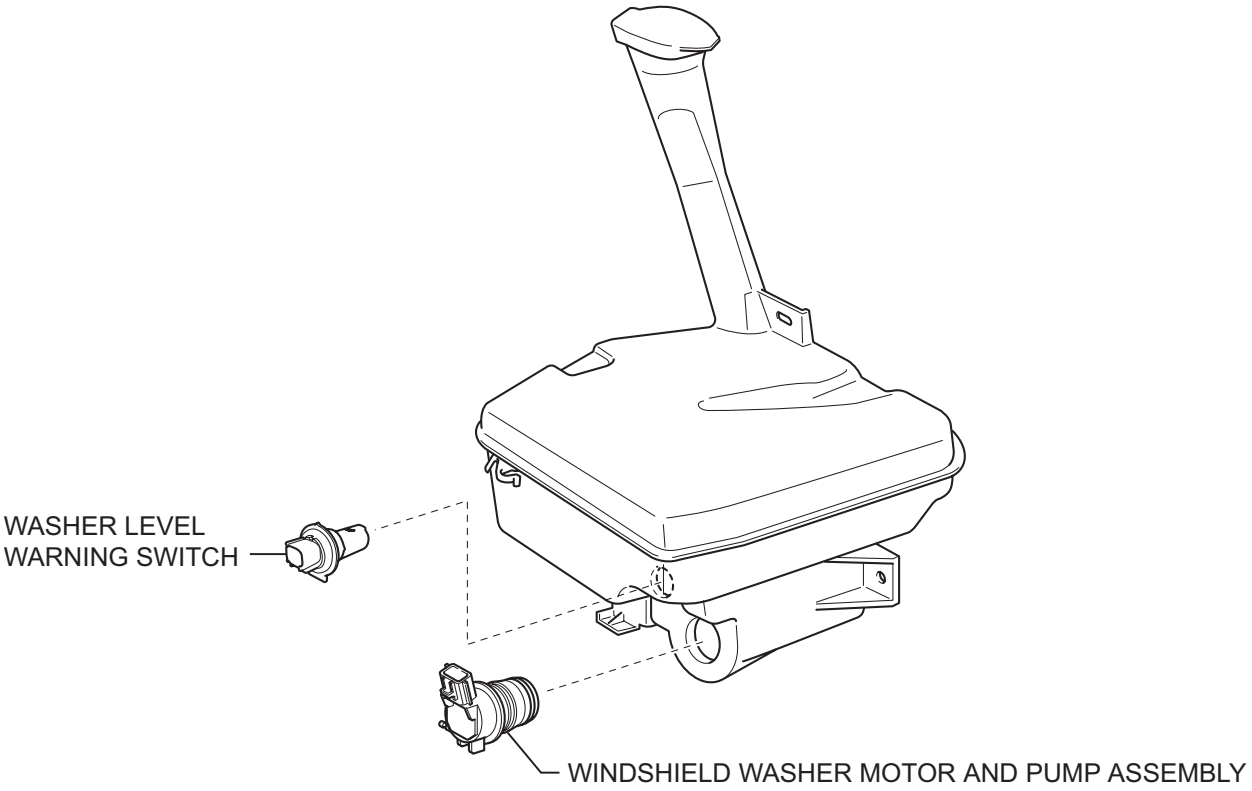

Y

E129621E01

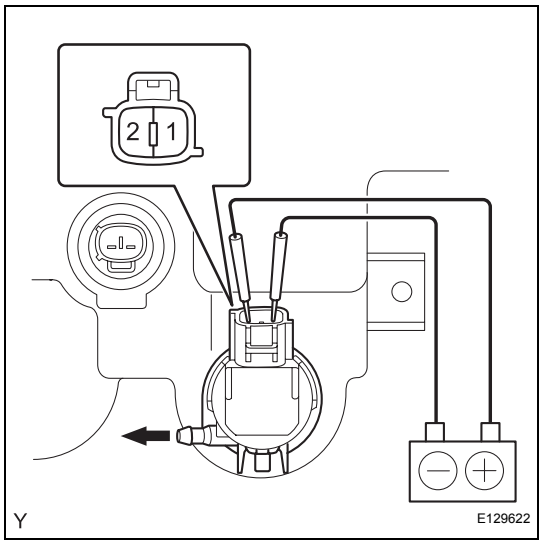

ON-VEHICLE INSPECTION

1. INSPECT WINDSHIELD WASHER MOTOR AND PUMP ASSEMBLY

(a) Check the operation of the windshield washer motor and pump.

(1) Fill the washer jar with washer fluid.
HINT:
The operation should be performed with the windshield washer motor and pump installed on the washer jar.

(2) Connect the positive (+) battery lead to terminal 1 of the windshield washer motor and pump, and the negative (-) battery lead to terminal 2. Check that washer fluid flows from the washer jar.
Standard:
Washer fluid flows from the washer jar.
If the result is not as specified, replace the windshield washer motor and pump.

WW

REMOVAL

1. **DISCONNECT CABLE FROM NEGATIVE BATTERY TERMINAL**
2. **REMOVE FRONT SPOILER COVER (w/ Front Spoiler) (See page ET-6)**
3. **REMOVE FRONT BUMPER COVER (See page ET-6)**
4. **REMOVE HEADLIGHT ASSEMBLY RH (See page LI-86)**
5. **DRAIN WASHER FLUID**
   (a) Disconnect the washer hose from the windshield washer motor and pump, and drain the washer fluid.
6. **REMOVE WINDSHIELD WASHER JAR ASSEMBLY**
   (a) w/ Washer Level Warning Switch
      (1) Disconnect the 2 harness clamps.
      (2) Disconnect the 2 connectors.
      (3) Remove the 2 bolts.
      (4) Remove the windshield washer jar.
   (b) w/o Washer Level Warning Switch
      (1) Disconnect the 2 harness clamps.
      (2) Disconnect the connector.
      (3) Remove the 2 bolts.
      (4) Remove the windshield washer jar.

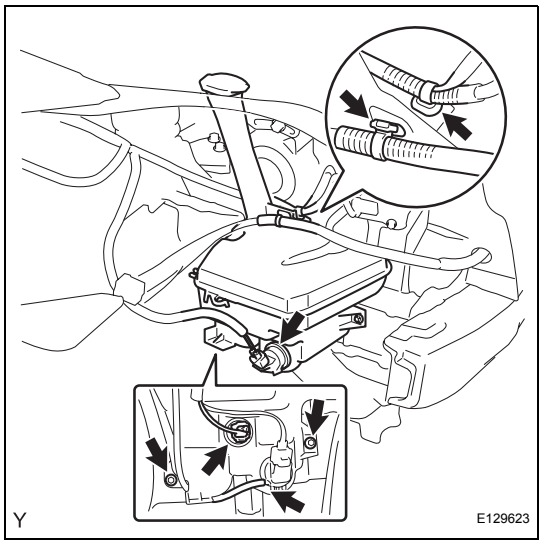

7. **REMOVE WINDSHIELD WASHER MOTOR AND PUMP ASSEMBLY**
   (a) Pull the washer motor and pump out of the packing of the washer jar.

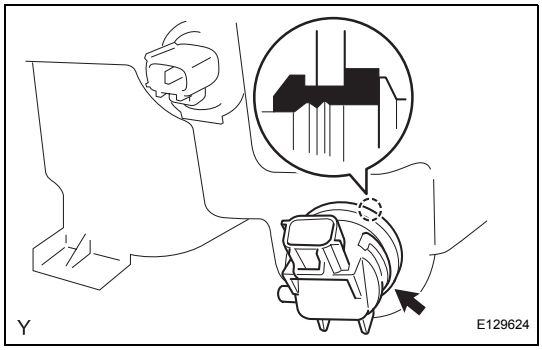

INSTALLATION

1. **INSTALL WINDSHIELD WASHER MOTOR AND PUMP ASSEMBLY**
   (a) Install the windshield washer motor and pump onto the packing of the washer jar.

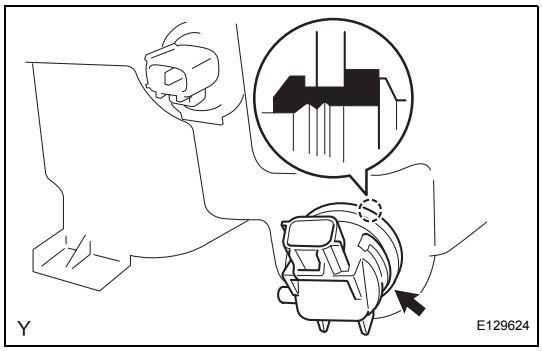

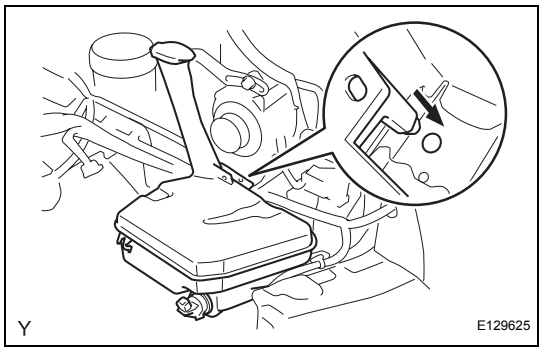

2. INSTALL WINDSHIELD WASHER JAR ASSEMBLY

(a) Install the windshield washer jar.

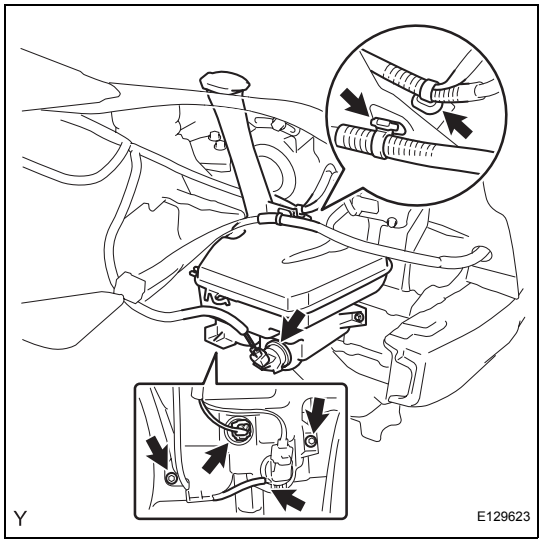

(b) w/ Washer Level Warning Switch

(1) Install the 2 bolts.
Torque: 5.5 N*m (56 kgf*cm, 49 in.*lbf)

(2) Connect the 2 connectors.

(3) Connect the 2 harness clamps.

(c) w/o Washer level warning switch

(1) Install the 2 bolts.
Torque: 5.5 N*m (56 kgf*cm, 49 in.*lbf)

(2) Connect the connector.

(3) Connect the 2 harness clamps.

3. FILL UP WASHER JAR AND PUMP ASSEMBLY WITH WASHER FLUID

(a) Connect the washer hose to the washer motor and pump, and fill the washer jar with washer fluid.

4. INSTALL HEADLIGHT ASSEMBLY RH (See page LI-92)

5. INSTALL FRONT BUMPER COVER (See page ET-16)

6. INSTALL FRONT SPOILER COVER (w/ Front Spoiler) (See page ET-19)

7. CONNECT CABLE TO NEGATIVE BATTERY TERMINAL
Torque: 5.4 N*m (55 kgf*cm, 48 in.*lbf)

WASHER MOTOR (for Hatchback)

COMPONENTS

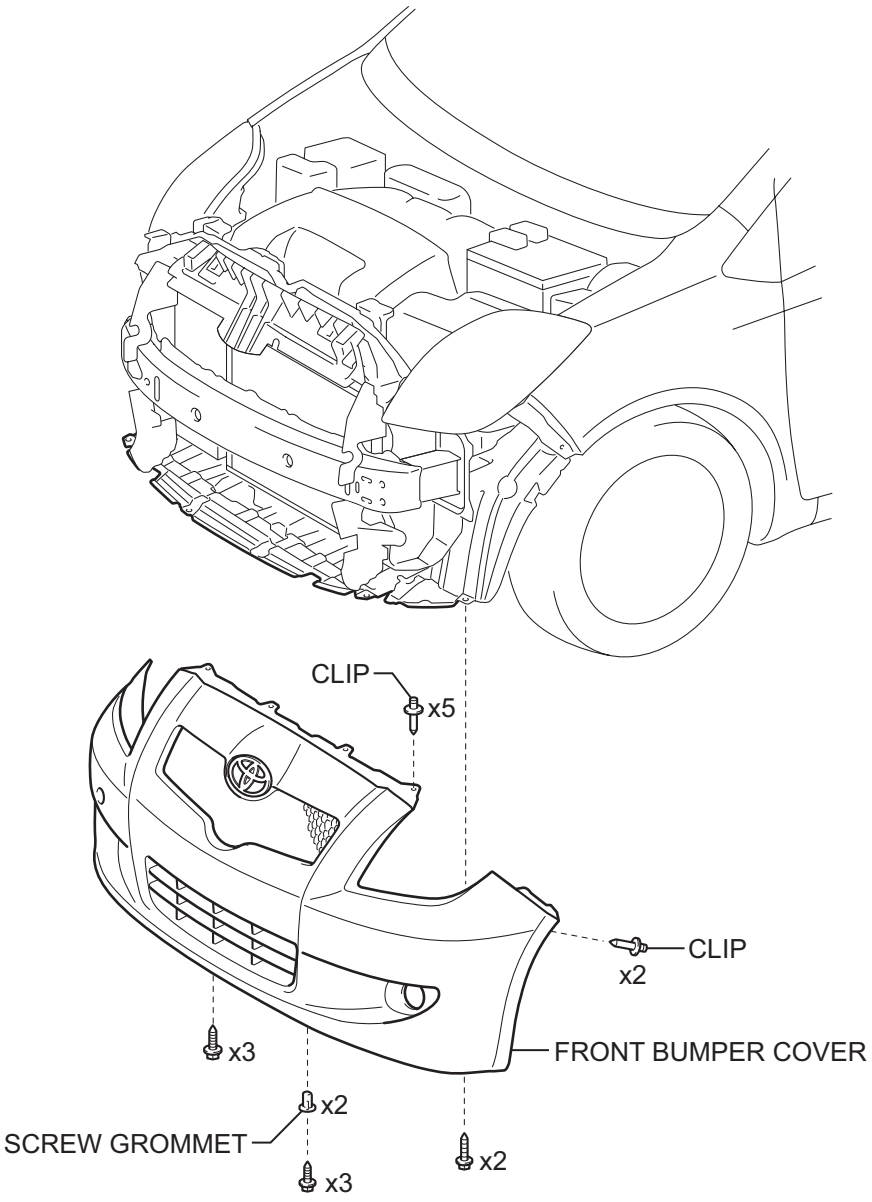

T

E117642E02

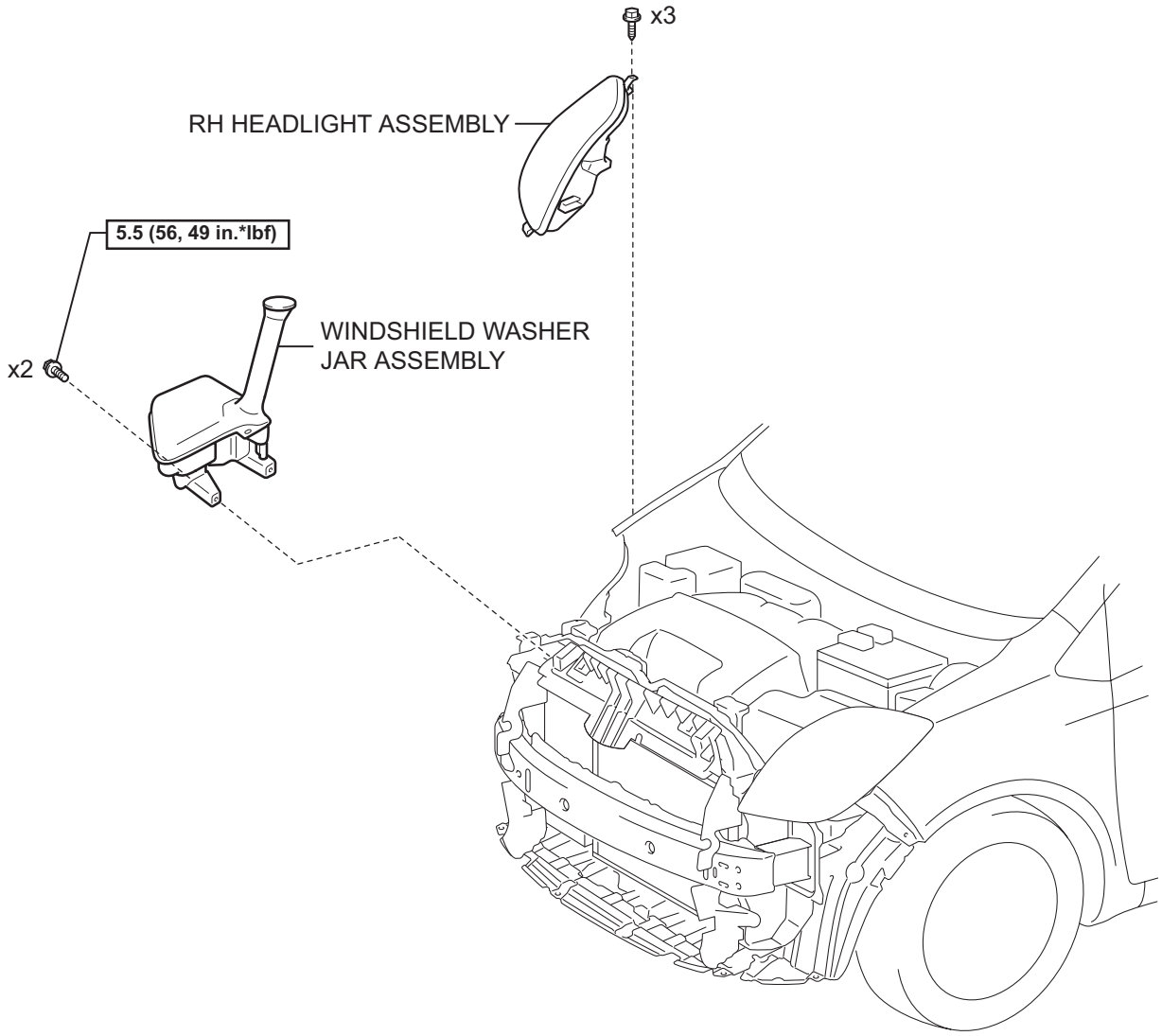

N*m (kgf*cm, ft*lbf) : Specified torque

T

E117643E02

WW

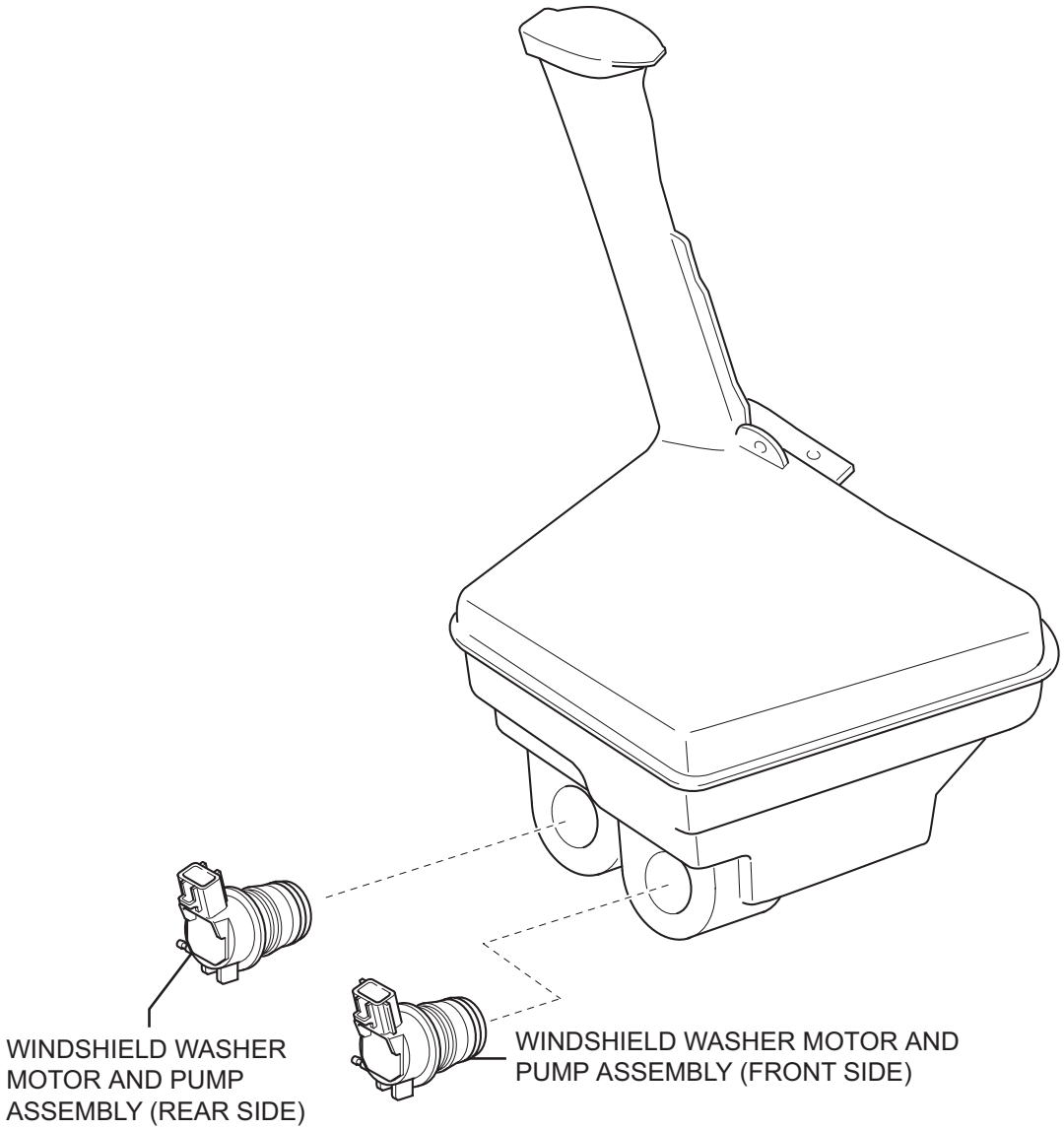

Y

E114481E01

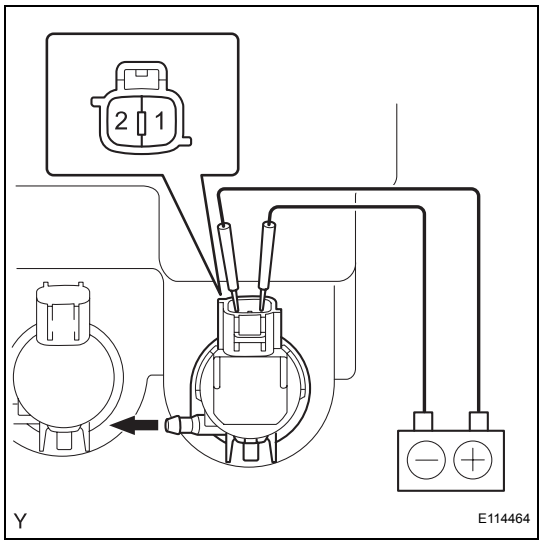

ON-VEHICLE INSPECTION

1. INSPECT WINDSHIELD WASHER MOTOR AND PUMP ASSEMBLY (for Front Side)

(a) Check the operation of the windshield washer motor and pump front side.

(1) Fill the washer jar with washer fluid.
HINT:
The operation should be performed with the windshield washer motor and pump installed on the washer jar.

(2) Connect the positive (+) battery lead to terminal 1 of the windshield washer motor and pump, and the negative (-) battery lead to terminal 2. Check that washer fluid flows from the washer jar.
Standard:
Washer fluid flows from the washer jar.
If the result is not as specified, replace the windshield washer motor and pump.

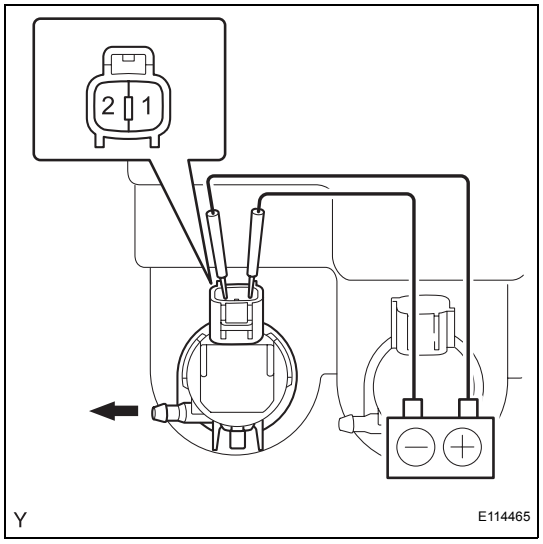

2. INSPECT REAR WASHER MOTOR AND PUMP ASSEMBLY (for Rear Side)

(a) Check the operation of the windshield washer motor and pump rear side.

(1) Fill the washer jar with washer fluid.
HINT:
The operation should be performed with the windshield washer motor and pump installed onto the washer jar.

(2) Connect the positive (+) battery lead to terminal 1 of the windshield washer motor and pump, and the negative (-) battery lead to terminal 2. Check that washer fluid flows from the washer jar.
Standard:
Washer fluid flows from the washer jar.
If the result is not as specified, replace the rear washer motor and pump.

WW

REMOVAL

1. **DISCONNECT CABLE FROM NEGATIVE BATTERY TERMINAL**
2. **REMOVE FRONT BUMPER COVER (See page ET-24)**
3. **REMOVE RH HEADLIGHT ASSEMBLY (See page LI-97)**
4. **DRAIN WASHER FLUID**
   (a) Disconnect the 2 washer hoses from the windshield washer motor and pump, and drain the washer fluid.
5. **REMOVE WINDSHIELD WASHER JAR ASSEMBLY**
   (a) Disconnect the 2 harness clamps.
   (b) Disconnect the 2 connectors.
   (c) Remove the 2 bolts.
   (d) Remove the windshield washer jar.

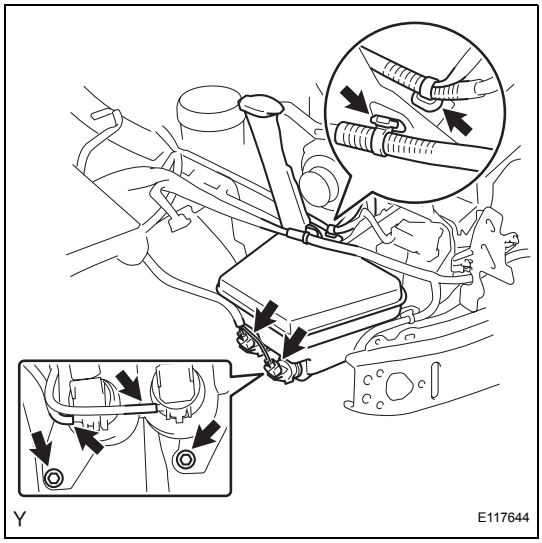

6. **REMOVE WINDSHIELD WASHER MOTOR AND PUMP ASSEMBLY**
   (a) Pull the washer motor and pump out of the packing of the washer jar.

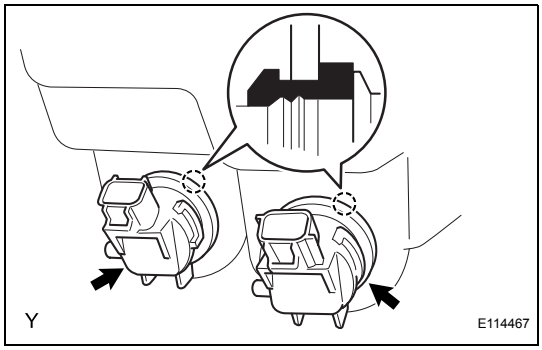

INSTALLATION

1. **INSTALL WINDSHIELD WASHER MOTOR AND PUMP ASSEMBLY**
   (a) Install the windshield washer motor and pump onto the packing of the washer jar.

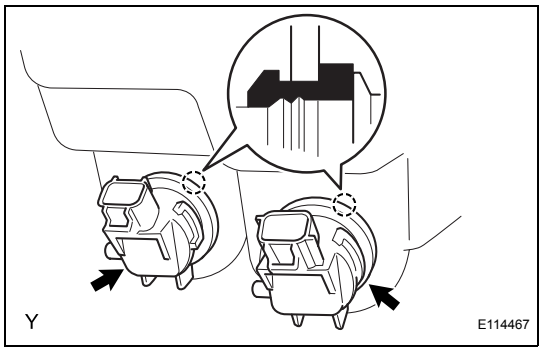

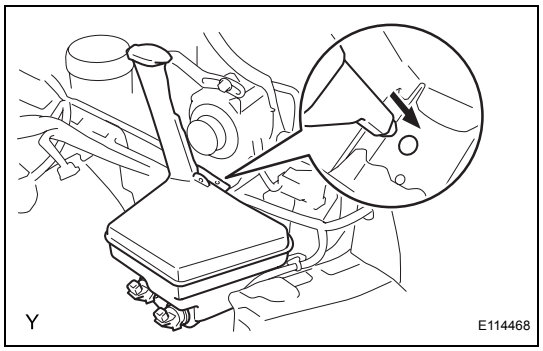

2. INSTALL WINDSHIELD WASHER JAR ASSEMBLY

(a) Install the windshield washer jar.

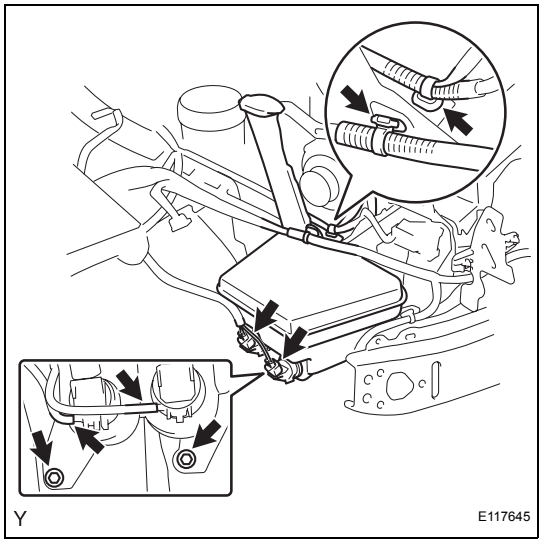

(b) Install the 2 bolts.
Torque: 5.5 N*m (56 kgf*cm, 49 in.*lbf)

(c) Connect the 2 connectors.

(d) Connect the 2 harness clamps.

3. FILL UP WASHER JAR AND PUMP ASSEMBLY WITH WASHER FLUID

(a) Connect the washer hose to the washer motor and pump, and fill the washer jar with washer fluid.

4. INSTALL RH HEADLIGHT ASSEMBLY (See page LI-104)

5. INSTALL FRONT BUMPER COVER (See page ET-33)

6. CONNECT CABLE TO NEGATIVE BATTERY TERMINAL
Torque: 5.4 N*m (55 kgf*cm, 48 in.*lbf)

WW

WASHER NOZZLE (for Sedan)

ON-VEHICLE INSPECTION

1. INSPECT WASHER NOZZLE

(a) Start the engine.

(b) Check where the washer fluid hits the windshield.

Standard:

Washer fluid hits the windshield in the areas shown in the illustration.

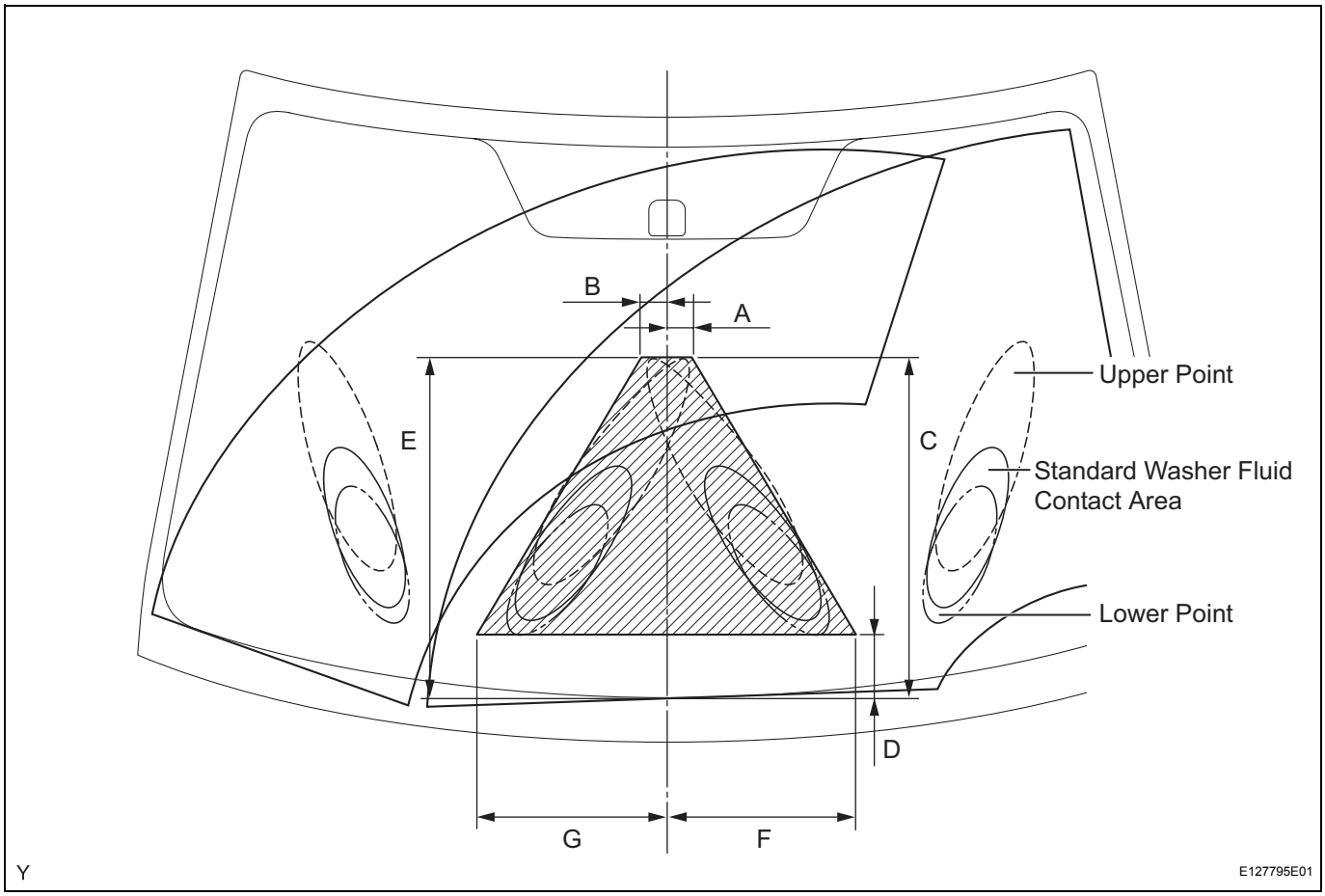

Specification

Area	Measurement
A	29.2 mm (1.15 in.)
B	26.6 mm (1.05 in.)
C	427.8 mm (16.84 in.)
D	79.9 mm (3.15 in.)
E	426.2 mm (16.78 in.)
F	234.8 mm (9.24 in.)
G	234.5 mm (9.23 in.)

ADJUSTMENT

1. **REMOVE FRONT WIPER ARM HEAD CAP (See page WW-9)**
2. **REMOVE FRONT WIPER ARM AND BLADE ASSEMBLY LH (See page WW-9)**
3. **REMOVE FRONT WIPER ARM AND BLADE ASSEMBLY RH (See page WW-9)**
4. **REMOVE COWL SIDE VENTILATOR SUB-ASSEMBLY LH (See page WW-10)**
5. **REMOVE COWL SIDE VENTILATOR SUB-ASSEMBLY RH (See page WW-10)**
6. **REMOVE COWL TOP VENTILATOR LOUVER SUB-ASSEMBLY (See page WW-10)**
7. **REMOVE WASHER NOZZLE**
   (a) Disconnect the washer hose.
   (b) Disengage the 2 claws and remove the front washer nozzle.
   NOTICE:
   Do not reuse the washer nozzle.

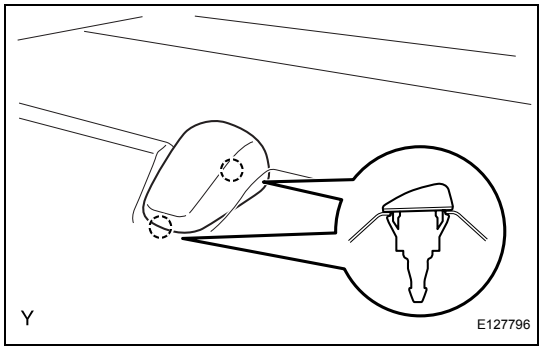

8. **ADJUST WASHER NOZZLE**
   (a) Select a washer nozzle from the table so as to make the washer fluid hit within the specified area.
   Available Washer Nozzle

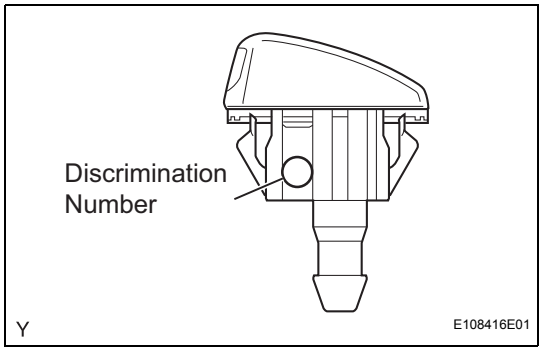

Part Number	Discrimination Number	Washer Fluid Injection Angle
85381-52250	12	0°
85381-52280	13	+ 1°
85381-52290	11	- 1°
85381-52300	14	+ 2°
85381-52310	10	- 2°

9. **INSTALL COWL TOP VENTILATOR LOUVER SUB-ASSEMBLY (See page WW-12)**
10. **INSTALL COWL SIDE VENTILATOR SUB-ASSEMBLY LH (See page WW-13)**
11. **INSTALL COWL SIDE VENTILATOR SUB-ASSEMBLY RH (See page WW-13)**
12. **INSTALL FRONT WIPER ARM AND BLADE ASSEMBLY LH (See page WW-13)**
13. **INSTALL FRONT WIPER ARM AND BLADE ASSEMBLY RH (See page WW-14)**
14. **INSTALL FRONT WIPER ARM HEAD CAP (See page WW-15)**

WASHER NOZZLE (for Hatchback)

ON-VEHICLE INSPECTION

1. INSPECT WASHER NOZZLE

(a) Start the engine.

(b) Check where the washer fluid hits the windshield.

Standard:

Washer fluid hits the windshield in the areas shown in the illustration.

(1) Front:

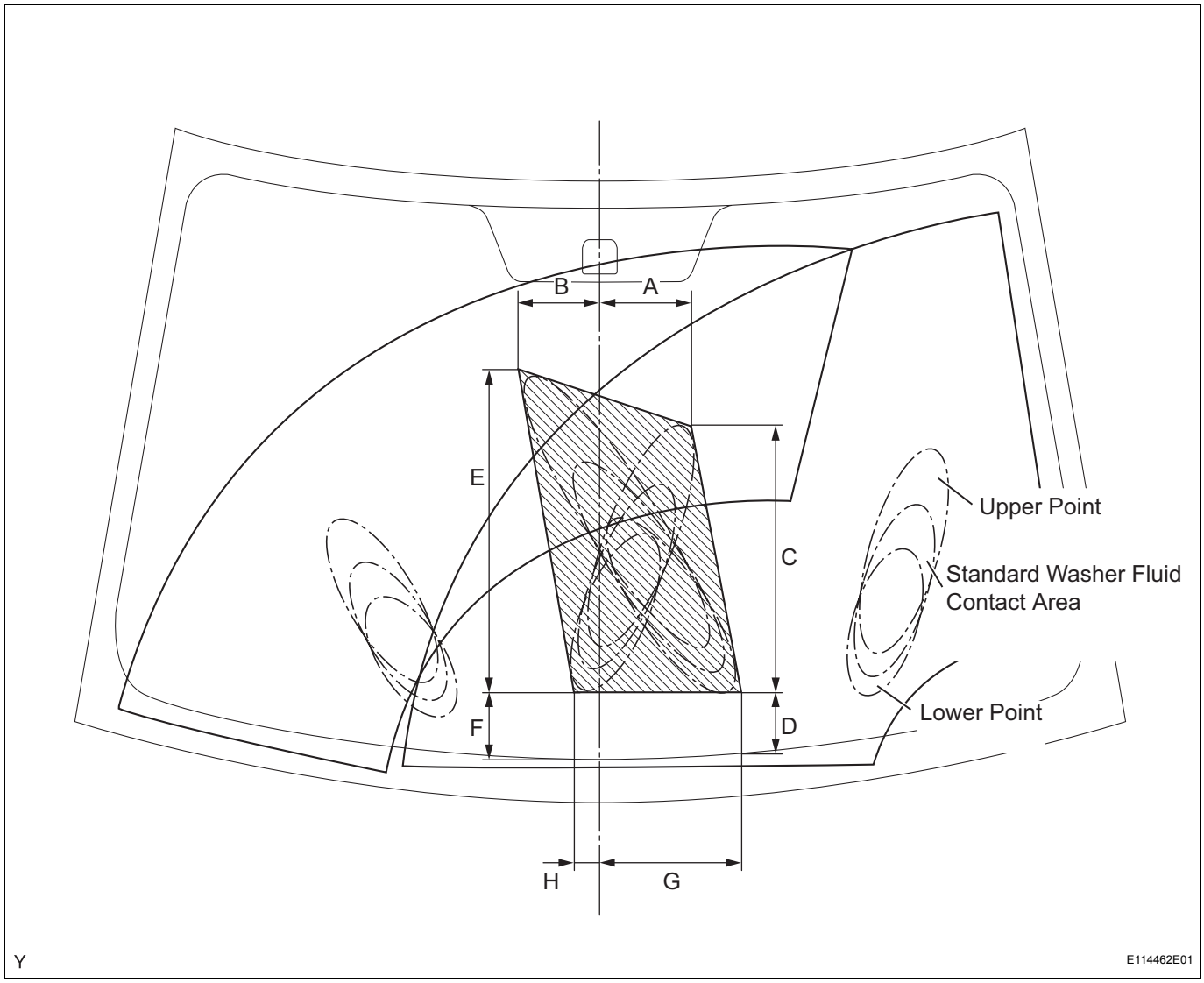

Specification

Area	Measurement
A	115 mm (4.53 in.)
B	100 mm (3.94 in.)
C	375 mm (14.76 in.)
D	85 mm (3.35 in.)
E	454 mm (17.87 in.)
F	88 mm (3.46 in.)
G	178 mm (7.01 in.)

Area	Measurement
H	31 mm (1.22 in.)

(2) Rear:

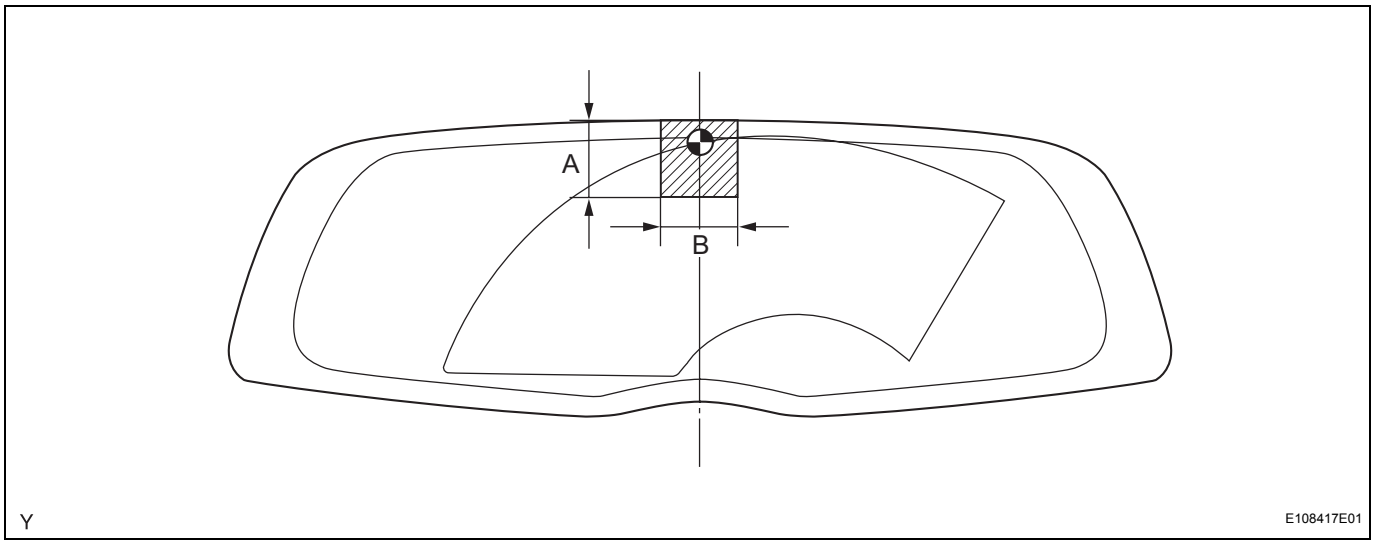

Specification

Area	Measurement
A	100 mm (3.94 in.)
B	100 mm (3.94 in.)

ADJUSTMENT

1. **REMOVE FRONT WIPER ARM HEAD CAP (See page WW-17)**
2. **REMOVE FRONT WIPER ARM AND BLADE ASSEMBLY LH (See page WW-17)**
3. **REMOVE FRONT WIPER ARM AND BLADE ASSEMBLY RH (See page WW-17)**
4. **REMOVE HOOD TO COWL TOP SEAL (See page WW-18)**
5. **REMOVE COWL TOP VENTILATOR LOUVER SUB-ASSEMBLY (See page WW-18)**
6. **REMOVE COWL TOP VENTILATOR LOUVER LH (See page WW-18)**

WW

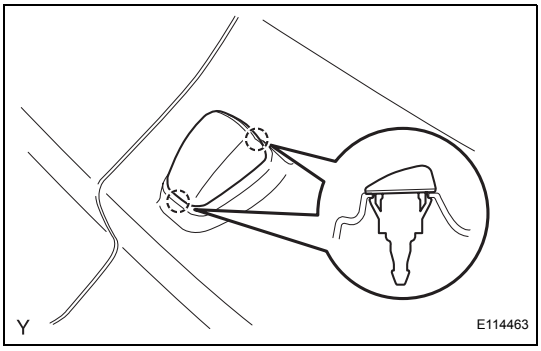

7. **REMOVE WASHER NOZZLE**
   (a) Disconnect the washer hose.
   (b) Disengage the 2 claws and remove the front washer nozzle.
   NOTICE:
   Do not reuse the washer nozzle.

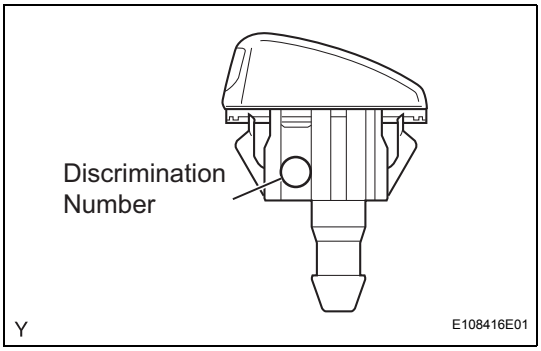

8. **ADJUST WASHER NOZZLE**
   (a) Select a washer nozzle from the table so as to make the washer fluid hit within the specified area.
   Available Washer Nozzle

Part Number	Discrimination Number	Washer Fluid Injection Angle
85381-52250	12	0°
85381-52280	13	+ 1°
85381-52290	11	- 1°
85381-52300	14	+ 2°
85381-52310	10	- 2°

9. **INSTALL COWL TOP VENTILATOR LOUVER LH (See page WW-21)**
10. **INSTALL COWL TOP VENTILATOR LOUVER SUB-ASSEMBLY (See page WW-21)**
11. **INSTALL HOOD TO COWL TOP SEAL (See page WW-22)**
12. **INSTALL FRONT WIPER ARM AND BLADE ASSEMBLY LH (See page WW-22)**
13. **INSTALL FRONT WIPER ARM AND BLADE ASSEMBLY RH (See page WW-23)**
14. **INSTALL FRONT WIPER ARM HEAD CAP (See page WW-23)**

WASHER LEVEL WARNING SWITCH (for Sedan)

COMPONENTS

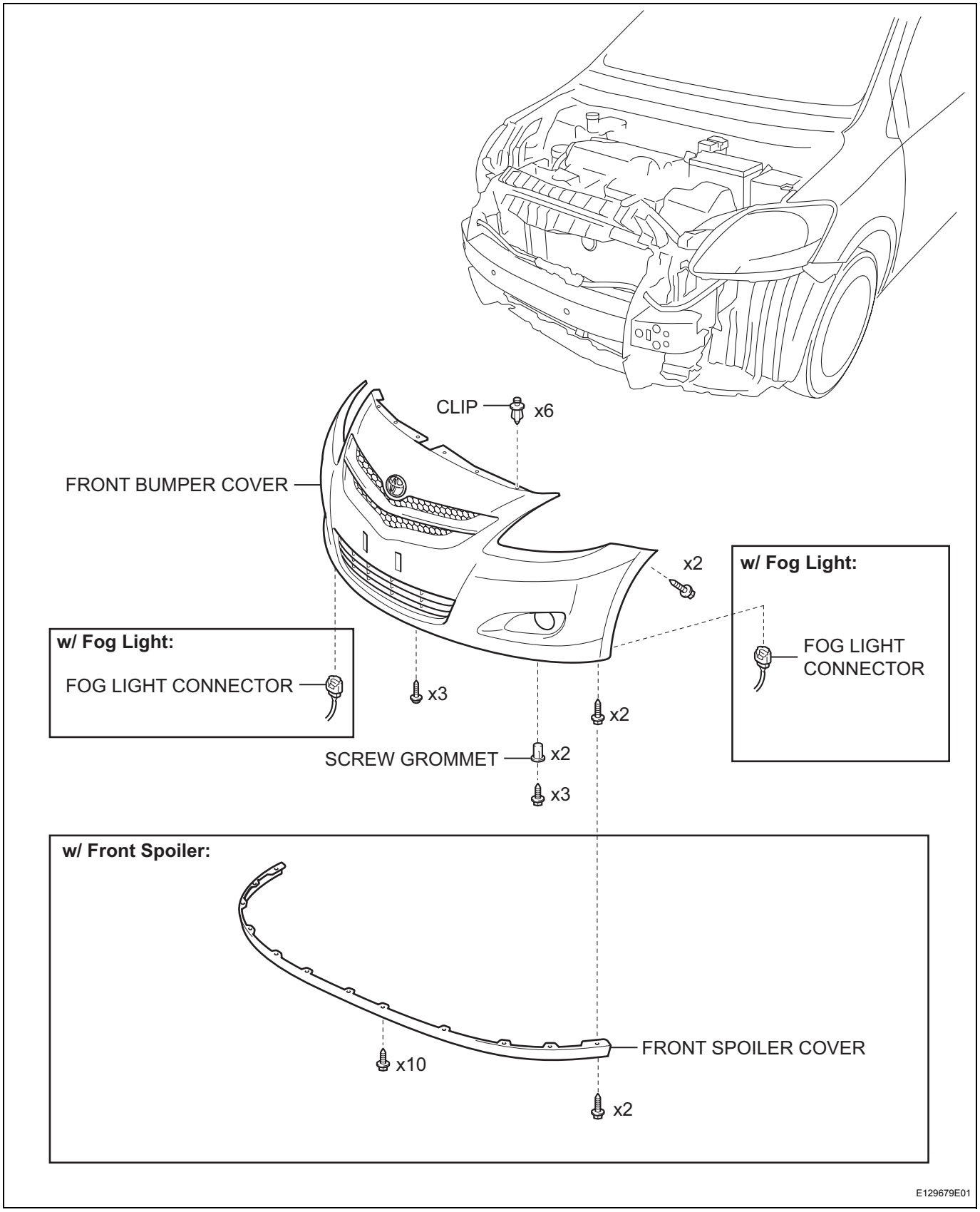

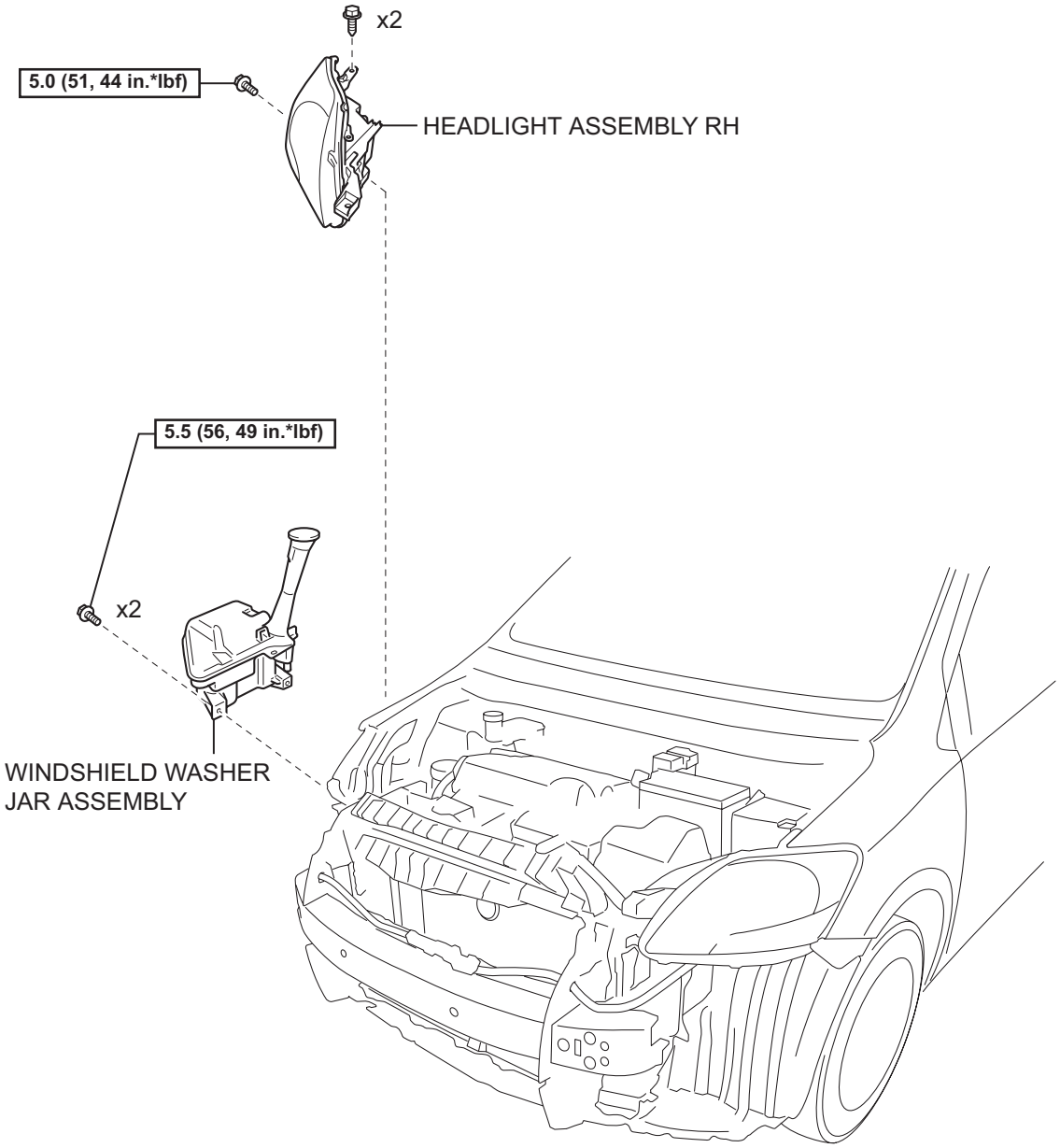

N*m (kgf*cm, ft*lbf) : Specified torque

Y

E129620E01

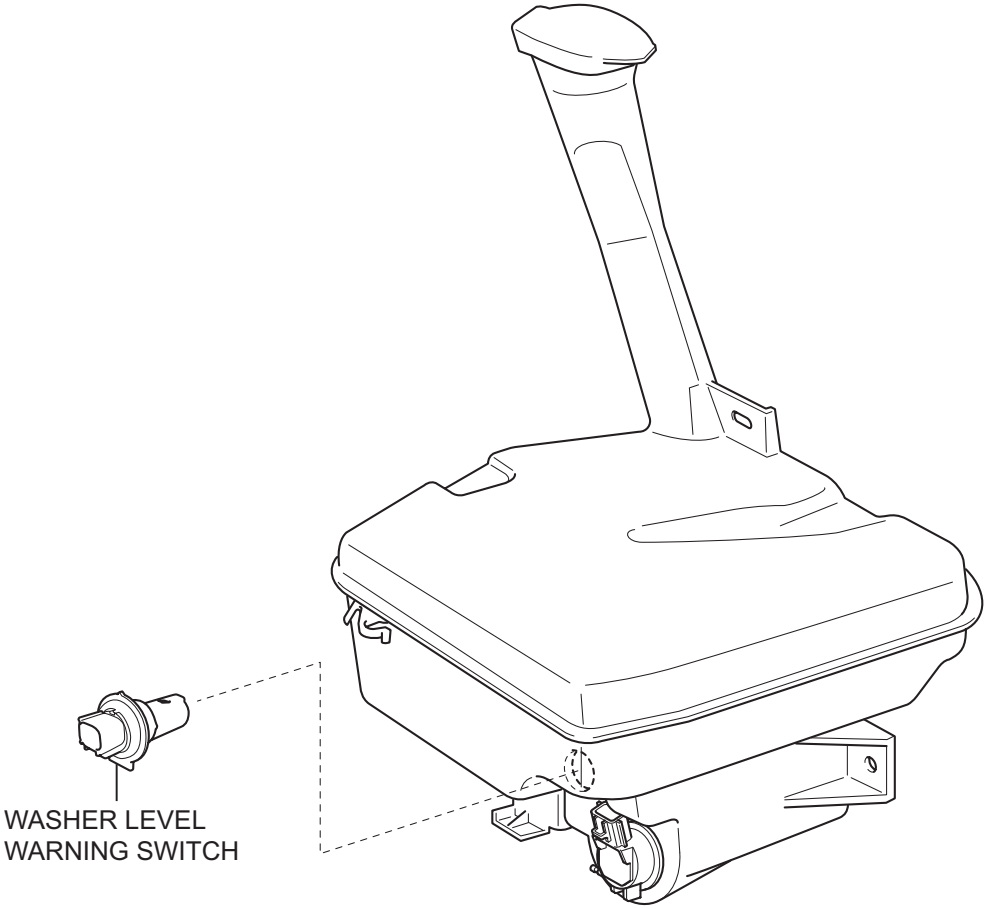

Y

E129684E01

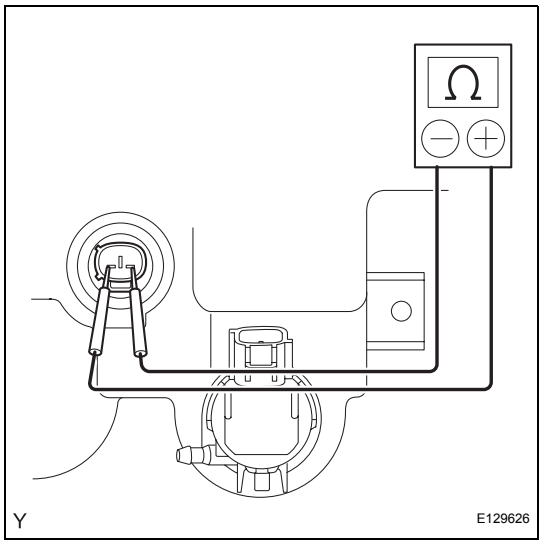

WW

ON-VEHICLE INSPECTION

1. INSPECT WASHER LEVEL WARNING SWITCH

(a) Check the operation of the washer level warning switch.

(1) Fill the washer jar with washer fluid.
HINT:
The operation should be performed with the washer level warning switch installed on the washer jar.

(2) Connect the positive (+) battery lead to terminal 1 of the washer level warning switch, and the negative (-) battery lead to terminal 2.

(3) Check the resistance.
HINT:
Pull out the washer hose connected to the washer motor. Perform the inspection while draining the washer fluid off.

Standard Resistance

Amount of remaining washer fluid	Specified Condition
600 to 800 ml or more	10 kΩ or higher
600 to 800 ml or less	Below 1Ω

If the result is not as specified, replace the washer jar .

REMOVAL

1. **DISCONNECT CABLE FROM NEGATIVE BATTERY TERMINAL**
2. **REMOVE FRONT SPOILER COVER (w/ Front Spoiler) (See page ET-6)**
3. **REMOVE FRONT BUMPER COVER (See page ET-6)**
4. **REMOVE HEADLIGHT ASSEMBLY RH (See page LI-86)**
5. **DRAIN WASHER FLUID**
   (a) Disconnect the 2 washer hoses from the windshield washer motor and pump, and drain the washer fluid.
6. **REMOVE WINDSHIELD WASHER JAR ASSEMBLY**
   (a) Disconnect the 2 harness clamps.
   (b) Disconnect the 2 connectors.
   (c) Remove the 2 bolts.
   (d) Remove the windshield washer jar.

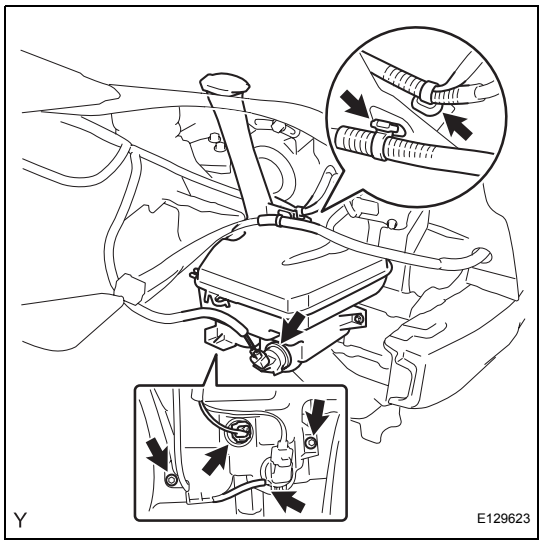

7. **REMOVE WASHER LEVEL WARNING SWITCH**
   (a) Pull the washer motor and pump out of the packing of the washer jar.

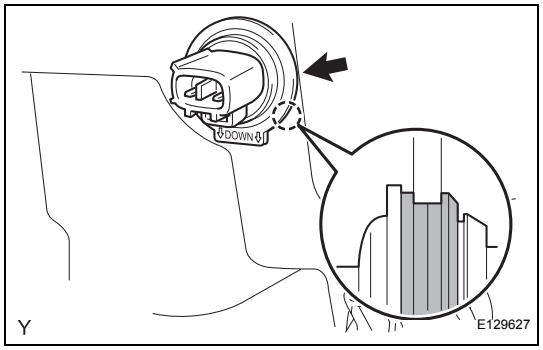

INSTALLATION

1. **INSTALL WASHER LEVEL WARNING SWITCH**
   (a) Install the washer level warning switch onto the packing of the washer jar.

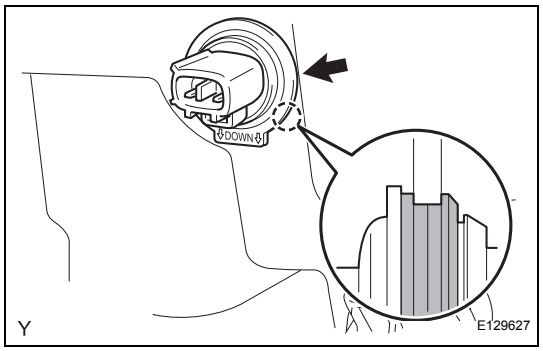

WW

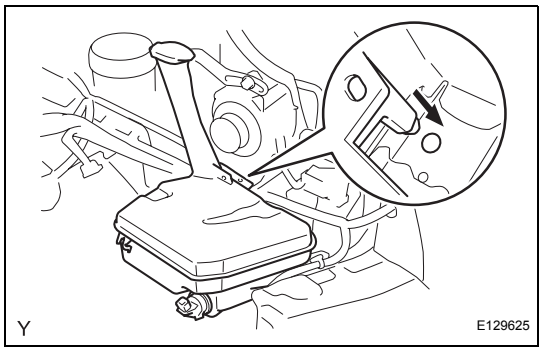

2. INSTALL WINDSHIELD WASHER JAR ASSEMBLY

(a) Install the windshield washer jar.

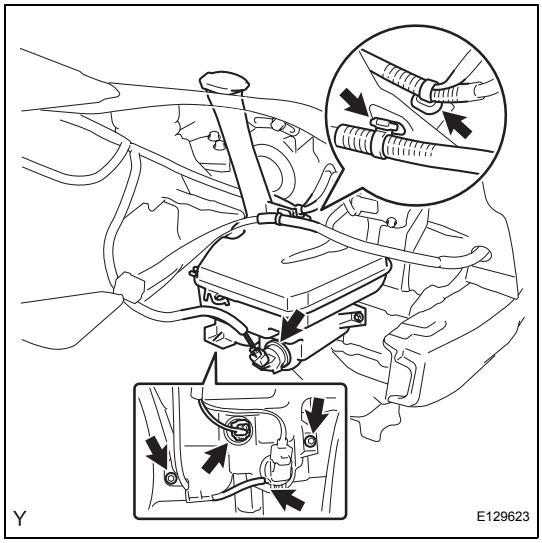

(b) Install the 2 bolts.
Torque: 5.5 N*m (56 kgf*cm, 49 in.*lbf)

(c) Connect the 2 connectors.

(d) Connect the 2 harness clamps.

3. FILL UP WASHER JAR AND PUMP ASSEMBLY WITH WASHER FLUID

(a) Connect the washer hose to the washer motor and pump, and fill the washer jar with washer fluid.

4. INSTALL HEADLIGHT ASSEMBLY RH (See page LI-92)

5. INSTALL FRONT BUMPER COVER (See page ET-16)

6. INSTALL FRONT SPOILER COVER (w/ Front Spoiler) (See page ET-19)

7. CONNECT CABLE TO NEGATIVE BATTERY TERMINAL
Torque: 5.4 N*m (55 kgf*cm, 48 in.*lbf)