2004 GMC Canyon Owner Manual

Seats and Restraint Systems 1-1
Front Seats 1-3
Rear Seats 1-9
Safety Belts 1-11
Child Restraints 1-31
Air Bag Systems 1-60
Restraint System Check 1-73

Features and Controls 2-1
Keys 2-2
Doors and Locks 2-7
Windows 2-12
Theft-Deterrent Systems 2-14
Starting and Operating Your Vehicle 2-16
Mirrors 2-36
OnStar® System 2-41
Storage Areas 2-42

Instrument Panel 3-1
Instrument Panel Overview 3-2
Climate Controls 3-18
Warning Lights, Gages, and Indicators 3-22
Driver Information Center (DIC) 3-37
Audio System(s) 3-42

Driving Your Vehicle 4-1
Your Driving, the Road, and Your Vehicle 4-2
Towing 4-47

Service and Appearance Care 5-1
Service 5-3
Fuel 5-5
Checking Things Under the Hood 5-10
Rear Axle 5-47
Four-Wheel Drive 5-48
Front Axle 5-49
Bulb Replacement 5-50
Windshield Wiper Blade Replacement 5-55
Tires 5-57
Appearance Care 5-94
Vehicle Identification 5-103
Electrical System 5-103
Capacities and Specifications 5-108

Maintenance Schedule 6-1
Maintenance Schedule 6-2

Customer Assistance and Information 7-1
Customer Assistance and Information 7-2
Reporting Safety Defects 7-10

Index 1

GENERAL MOTORS, GM, the GM Emblem, GMC, and the GMC Emblem are registered trademarks and the name CANYON is a trademark of General Motors Corporation.

This manual includes the latest information at the time it was printed. We reserve the right to make changes after that time without further notice. For vehicles first sold in Canada, substitute the name “General Motors of Canada Limited” for GMC whenever it appears in this manual.

Please keep this manual in your vehicle, so it will be there if you ever need it when you’re on the road. If you sell the vehicle, please leave this manual in it so the new owner can use it.

Canadian Owners

You can obtain a French language copy of this manual from your dealer or from:

Helm, Incorporated
P.O. Box 07130
Detroit, MI 48207

How to Use This Manual

Many people read their owner’s manual from beginning to end when they first receive their new vehicle. If you do this, it will help you learn about the features and controls for your vehicle. In this manual, you will find that pictures and words work together to explain things.

Index

A good place to look for what you need is the Index in back of the manual. It is an alphabetical list of what is in the manual, and the page number where you will find it.

Litho in U.S.A.
Part No. X2440 A First Edition

©Copyright General Motors Corporation 10/06/03
All Rights Reserved

Safety Warnings and Symbols

You will find a number of safety cautions in this book. We use a box and the word CAUTION to tell you about things that could hurt you if you were to ignore the warning.

⚠ CAUTION:

These mean there is something that could hurt you or other people.

In the caution area, we tell you what the hazard is. Then we tell you what to do to help avoid or reduce the hazard. Please read these cautions. If you don't, you or others could be hurt.

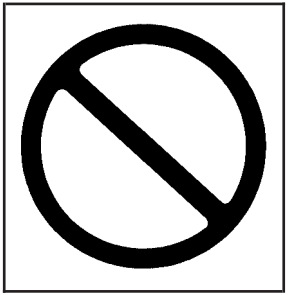

You will also find a circle with a slash through it in this book. This safety symbol means "Don't," "Don't do this" or "Don't let this happen."

Vehicle Damage Warnings

Also, in this book you will find these notices:

Notice: **These mean there is something that could damage your vehicle.**

A notice will tell you about something that can damage your vehicle. Many times, this damage would not be covered by your warranty, and it could be costly. But the notice will tell you what to do to help avoid the damage.

When you read other manuals, you might see CAUTION and NOTICE warnings in different colors or in different words.

You'll also see warning labels on your vehicle. They use the same words, CAUTION or NOTICE.

Vehicle Symbols

Your vehicle has components and labels that use symbols instead of text. Symbols, used on your vehicle, are shown along with the text describing the operation or information relating to a specific component, control, message, gage or indicator.

If you need help figuring out a specific name of a component, gage or indicator, reference the following topics:

- Seats and Restraint Systems in Section 1
- Features and Controls in Section 2
- Instrument Panel Overview in Section 3
- Climate Controls in Section 3
- Warning Lights, Gages and Indicators in Section 3
- Audio System(s) in Section 3
- Engine Compartment Overview in Section 5

These are some examples of symbols you may find on your vehicle:

CAUTION POSSIBLE INJURY	LATCH BOTH LAP AND SHOULDER BELTS TO PROTECT OCCUPANT DO NOT TWIST SAFETY BELT WHEN ATTACHING		MASTER LIGHTING SWITCH	ENGINE COOLANT TEMP	FUSE BOX ACCESS
PROTECT EYES BY SHIELDING	FASTEN SEAT BELTS	AIR BAG	TURN SIGNALS	BATTERY CHARGING SYSTEM	ENGINE COOLANT FAN
CAUSTIC BATTERY ACID COULD CAUSE BURNS	MOVE SEAT FULLY REARWARD SECURE CHILD SEAT	DO NOT INSTALL A REAR-FACING CHILD RESTRAINT IN THIS SEATING POSITION	PARKING LAMPS	BRAKE	FUEL
AVOID SPARKS OR FLAMES	PULL BELT OUT COMPLETELY THEN SECURE CHILD SEAT	DO NOT INSTALL A FORWARD-FACING CHILD RESTRAINT IN THIS SEATING POSITION	HAZARD WARNING FLASHER	COOLANT	OWNER'S MANUAL
SPARK OR FLAME COULD EXPLODE BATTERY	POWER WINDOW	DOOR LOCK UNLOCK	DAYTIME RUNNING LAMPS	ENGINE OIL PRESSURE	SERVICE
			FOG LAMPS	ANTI-LOCK BRAKES	SERVICE MANUAL

NOTES

Section 1 Seats and Restraint Systems

Front Seats 1-3
Manual Seats 1-3
Power Seats 1-4
Manual Lumbar 1-5
Heated Seats 1-5
Reclining Seatbacks 1-6
Head Restraints 1-7
Seatback Latches 1-8

Rear Seats 1-9
Rear Seat Operation (Crew Cab) 1-9
Rear Seat Operation (Extended Cab) 1-10

Safety Belts 1-11
Safety Belts: They Are for Everyone 1-11
Questions and Answers About Safety Belts 1-15
How to Wear Safety Belts Properly 1-16
Driver Position 1-16
Safety Belt Use During Pregnancy 1-23
Right Front Passenger Position 1-24
Center Front Passenger Position 1-24
Rear Seat Passengers 1-26
Rear Safety Belt Comfort Guides for Children and Small Adults 1-28
Safety Belt Pretensioners 1-30
Safety Belt Extender 1-30

Child Restraints 1-31
Older Children 1-31
Infants and Young Children 1-34
Child Restraint Systems 1-37
Where to Put the Restraint 1-40
Top Strap 1-42
Top Strap Anchor Location 1-44
Lower Anchorages and Top Tethers for Children (LATCH System) 1-46
Securing a Child Restraint Designed for the LATCH System (Models with an Air Bag Off Switch) 1-48
Securing a Child Restraint Designed for the LATCH System (Models without an Air Bag Off Switch) 1-51
Securing a Child Restraint in a Rear Seat Position 1-51
Securing a Child Restraint in the Center Front Seat Position 1-53
Securing a Child Restraint in the Right Front Seat Position (Models with an Air Bag Off Switch) 1-54
Securing a Child Restraint in the Right Front Seat Position (Models without an Air Bag Off Switch) 1-58

Air Bag Systems 1-60
Where Are the Air Bags? 1-63
When Should an Air Bag Inflate? 1-66
What Makes an Air Bag Inflate? 1-67
How Does an Air Bag Restrain? 1-67
What Will You See After an Air Bag Inflates? 1-68
Air Bag Off Switch 1-70
Servicing Your Air Bag-Equipped Vehicle 1-72
Adding Equipment to Your Air Bag-Equipped Vehicle 1-73
Restraint System Check 1-73
Checking Your Restraint Systems 1-73
Replacing Restraint System Parts After a Crash 1-74

Front Seats

Manual Seats

This section tells you about the seats – how to adjust them, and fold them up and down.

⚠ CAUTION:

You can lose control of the vehicle if you try to adjust a manual driver's seat while the vehicle is moving. The sudden movement could startle and confuse you, or make you push a pedal when you don't want to. Adjust the driver's seat only when the vehicle is not moving.

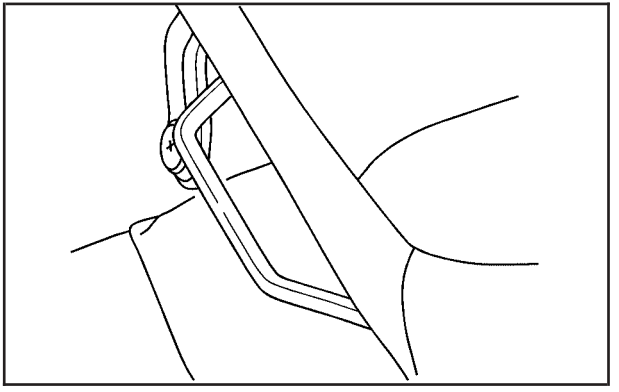

Move the lever located under the front of a manual seat up to unlock it. Slide the seat to where you want it and release the lever. Try to move the seat with your body to make sure the seat is locked into place.

Power Seats

If your vehicle has this feature, there will be a control on the outboard side of the front seat(s).

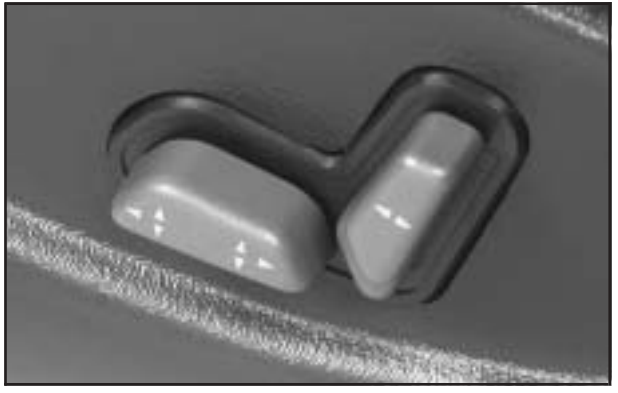

Horizontal Control: Raise or lower the front of the seat by raising or lowering the forward edge of the control.

Raise or lower the rear of the seat by raising or lowering the rear edge of the control.

Move the seat forward or rearward by moving the whole control toward the front or the rear of the vehicle.

Moving the whole control up or down raises or lowers the whole seat.

Vertical Control: This control reclines the seatbacks. See *Reclining Seatbacks on page 1-6* for more information.

Manual Lumbar

If your vehicle has this feature, there will be a knob located on the outboard side of the driver's seat.

Turn the knob counterclockwise to increase lumbar support and clockwise to decrease lumbar support.

Heated Seats

If your vehicle has this feature, the controls are located on the outboard side of the front seats.

This feature will quickly heat the lower cushion and lower back of the driver's and front passenger's seats for added comfort.

Press the lower part of the switch to turn the heater on at low heat. Press the upper part of the switch to turn the heater on at high heat. Put the switch in the center position to turn the heater off.

The ignition must be on for the heated seat feature to work. The passenger's safety belt must be engaged for the heated seat feature to work on the passenger's seat.

Reclining Seatbacks

Your vehicle may have reclining seatbacks.

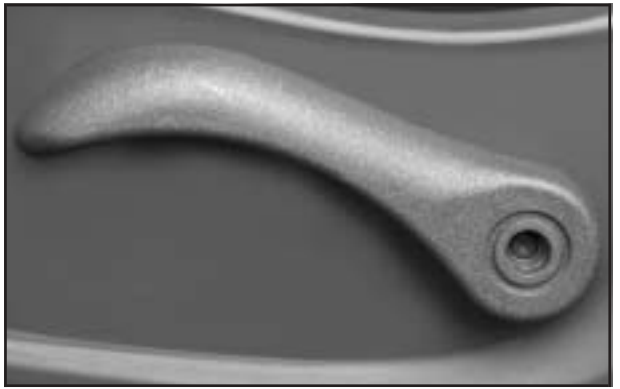

To manually recline your seatback, lift the lever on the outboard side of the seat.

Release the lever to lock the seatback where you want it. Pull up on the lever and without pushing on the seatback, the seat will go to an upright position.

If you have power seats, you can use the vertical power seat control to recline the seatback. Move the reclining front seatback forward or rearward by moving the control toward the front or rear of the vehicle.

But don't have a seatback reclined if your vehicle is moving.

⚠ CAUTION:

Sitting in a reclined position when your vehicle is in motion can be dangerous. Even if you buckle up, your safety belts can't do their job when you're reclined like this.

The shoulder belt can't do its job because it won't be against your body. Instead, it will be in front of you. In a crash you could go into it, receiving neck or other injuries.

The lap belt can't do its job either. In a crash the belt could go up over your abdomen. The belt forces would be there, not at your pelvic bones. This could cause serious internal injuries.

For proper protection when the vehicle is in motion, have the seatback upright. Then sit well back in the seat and wear your safety belt properly.

Head Restraints

If your vehicle is equipped with adjustable head restraints, adjust your head restraint so that the top of the restraint is closest to the top of your head. This position reduces the chance of a neck injury in a crash.

Push up on the head restraint to raise it. To lower the head restraint, press the button located on top of the seatback and push down on the head restraint.

Seatback Latches

Your vehicle may be equipped with front seatbacks that fold forward to let people get into the rear seat or to access the storage area behind the seat.

To fold the front seatback forward, push the lever on the side of the seat rearward and pull the seatback forward.

⚠ CAUTION:

If the seatback isn't locked, it could move forward in a sudden stop or crash. That could cause injury to the person sitting there. Always press rearward on the seatback to be sure it is locked.

To return the seatback to the upright position, push the seatback all the way back until the latch catches. If the seatback was reclined before being folded forward, it will return to the reclined position.

Rear Seats

Rear Seat Operation (Crew Cab)

If your vehicle is a crew cab, the rear seatback can be folded forward. Before you can fold the rear seatback, you need to unlatch the center safety belt buckle.

Use the following steps to lower one or both of the rear seatbacks:

1. Insert a tool with a small tip into the slot to unlatch the center position safety belt buckle. Then move the belt to the side so it is not in the way.

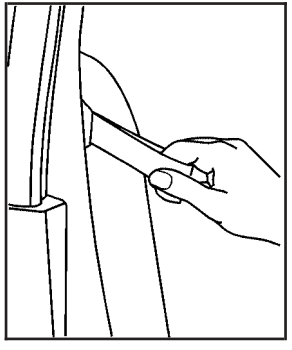

2. Grasp the loop located on the side of the seatback you want to fold and pull until you hear a click.

3. Fold the seatback down.

4. Repeat Steps 2 and 3 to fold down the other seatback.

⚠ CAUTION:

If the seatback isn't locked, it could move forward in a sudden stop or crash. That could cause injury to the person sitting there. Always press rearward on the seatback to be sure it is locked.

⚠ CAUTION:

A safety belt that is improperly routed, not properly attached, or twisted won't provide the protection needed in a crash. The person wearing the belt could be seriously injured. After raising the rear seatback, always check to be sure that the safety belts are properly routed and attached, and are not twisted.

To return the seatback to the upright position, do the following:

1. Lift the seatback up and push it back into place.
2. Reconnect the center safety belt latch plate to the buckle.
3. Make sure the seatback is locked into place by pushing and pulling on it.
4. Repeat Steps 1 and 3 for the other seatback.

When the seatback is not in use, it should be kept in the upright, locked position.

Rear Seat Operation (Extended Cab)

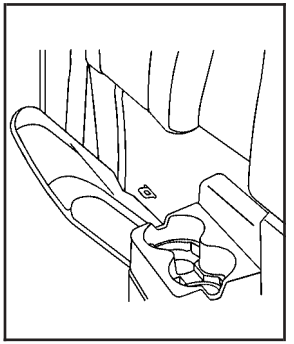

If your vehicle has an extended cab, there may be a forward folding seat in the rear area.

To fold the rear seat down, pull down on the bottom of the seat until the seat is in place. To store the seat, push the entire seat up until it is flush with the trim panel.

The rear seat storage compartments must be in the rearward position before folding the seat down.

Safety Belts

Safety Belts: They Are for Everyone

This part of the manual tells you how to use safety belts properly. It also tells you some things you should not do with safety belts.

⚠ CAUTION:

Don't let anyone ride where he or she can't wear a safety belt properly. If you are in a crash and you're not wearing a safety belt, your injuries can be much worse. You can hit things inside the vehicle or be ejected from it. You can be seriously injured or killed. In the same crash, you might not be, if you are buckled up. Always fasten your safety belt, and check that your passengers' belts are fastened properly too.

⚠ CAUTION:

It is extremely dangerous to ride in a cargo area, inside or outside of a vehicle. In a collision, people riding in these areas are more likely to be seriously injured or killed. Do not allow people to ride in any area of your vehicle that is not equipped with seats and safety belts. Be sure everyone in your vehicle is in a seat and using a safety belt properly.

Your vehicle has a light that comes on as a reminder to buckle up. See *Safety Belt Reminder Light on page 3-24*.

In most states and in all Canadian provinces, the law says to wear safety belts. Here's why: *They work*.

You never know if you'll be in a crash. If you do have a crash, you don't know if it will be a bad one.

A few crashes are mild, and some crashes can be so serious that even buckled up, a person wouldn't survive. But most crashes are in between. In many of them, people who buckle up can survive and sometimes walk away. Without belts they could have been badly hurt or killed.

After more than 30 years of safety belts in vehicles, the facts are clear. In most crashes buckling up does matter... a lot!

Why Safety Belts Work

When you ride in or on anything, you go as fast as it goes.

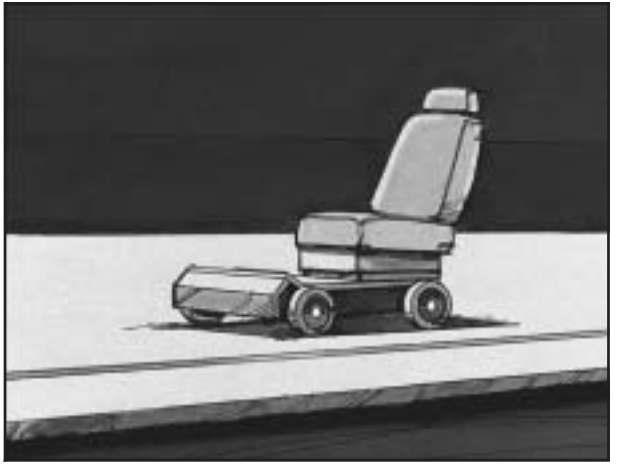

Take the simplest vehicle. Suppose it's just a seat on wheels.

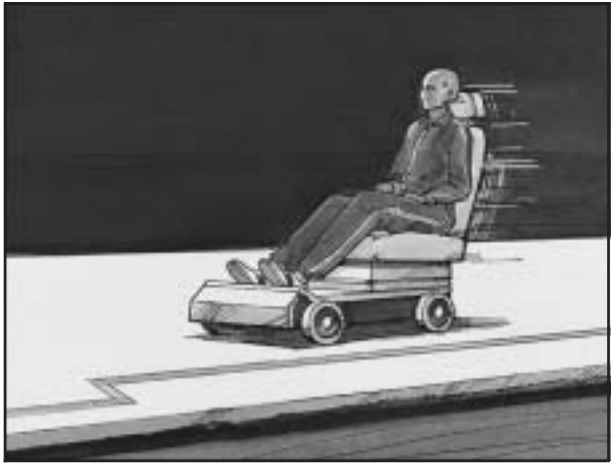

Put someone on it.

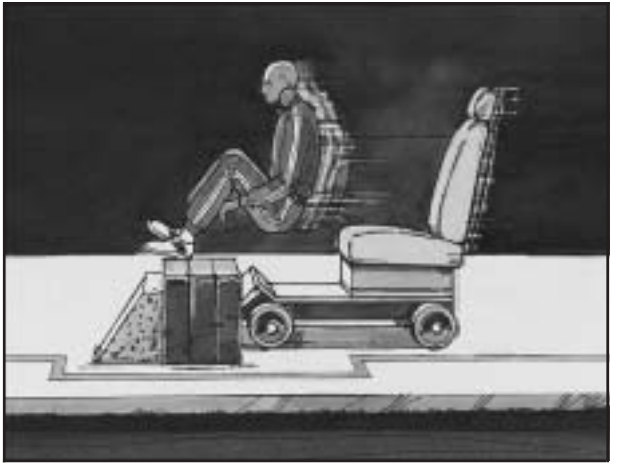

Get it up to speed. Then stop the vehicle. The rider doesn't stop.

The person keeps going until stopped by something. In a real vehicle, it could be the windshield...

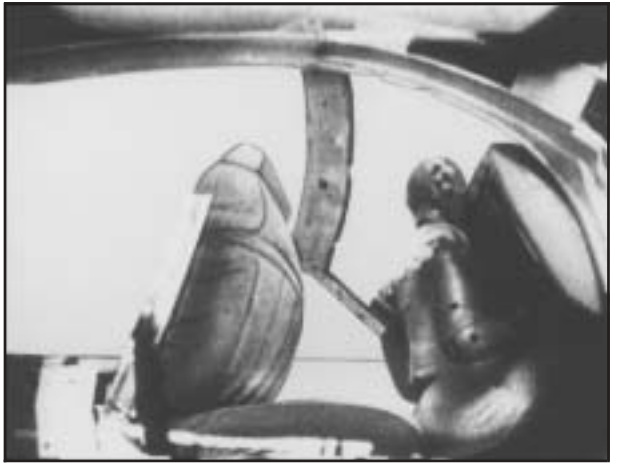

or the instrument panel...

or the safety belts!

With safety belts, you slow down as the vehicle does. You get more time to stop. You stop over more distance, and your strongest bones take the forces. That's why safety belts make such good sense.

Questions and Answers About Safety Belts

Q: Won't I be trapped in the vehicle after an accident if I'm wearing a safety belt?

A: You *could* be – whether you're wearing a safety belt or not. But you can unbuckle a safety belt, even if you're upside down. And your chance of being conscious during and after an accident, so you *can* unbuckle and get out, is *much* greater if you are belted.

Q: If my vehicle has air bags, why should I have to wear safety belts?

A: Air bags are in many vehicles today and will be in most of them in the future. But they are supplemental systems only; so they work *with* safety belts – not instead of them. Every air bag system ever offered for sale has required the use of safety belts. Even if you're in a vehicle that has air bags, you still have to buckle up to get the most protection. That's true not only in frontal collisions, but especially in side and other collisions.

Q: If I'm a good driver, and I never drive far from home, why should I wear safety belts?

A: You may be an excellent driver, but if you're in an accident – even one that isn't your fault – you and your passengers can be hurt. Being a good driver doesn't protect you from things beyond your control, such as bad drivers.

Most accidents occur within 25 miles (40 km) of home. And the greatest number of serious injuries and deaths occur at speeds of less than 40 mph (65 km/h).

Safety belts are for everyone.

How to Wear Safety Belts Properly

This part is only for people of adult size.

Be aware that there are special things to know about safety belts and children. And there are different rules for smaller children and babies. If a child will be riding in your vehicle, see *Older Children on page 1-31* or *Infants and Young Children on page 1-34*. Follow those rules for everyone's protection.

First, you'll want to know which restraint systems your vehicle has.

We'll start with the driver position.

Driver Position

This part describes the driver's restraint system.

Lap-Shoulder Belt

The driver has a lap-shoulder belt. Here is how to wear it properly.

1. Close and lock the door.
2. Adjust the seat so you can sit up straight. To see how, see "Seats" in the Index.

3. Pick up the latch plate and pull the belt across you. Do not let it get twisted.

   The shoulder belt may lock if you pull the belt across you very quickly. If this happens, let the belt go back slightly to unlock it. Then pull the belt across you more slowly.

4. Push the latch plate into the buckle until it clicks.

   Pull up on the latch plate to make sure it is secure. If the belt is not long enough, see *Safety Belt Extender on page 1-30*.

   Make sure the release button on the buckle is positioned so you would be able to unbuckle the safety belt quickly if you ever had to.

5. To make the lap part tight, pull down on the buckle end of the belt as you pull up on the shoulder belt.

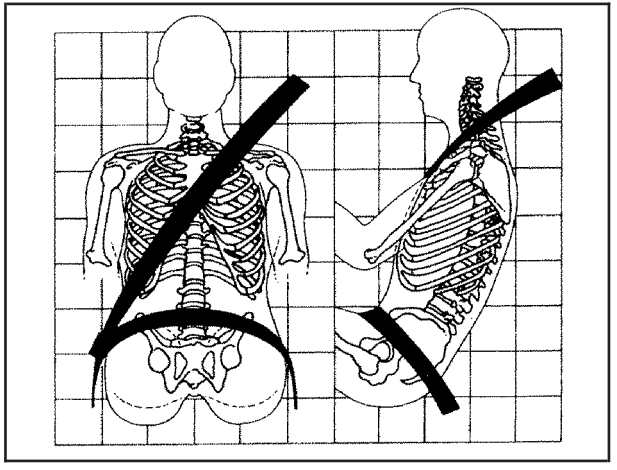

The lap part of the belt should be worn low and snug on the hips, just touching the thighs. In a crash, this applies force to the strong pelvic bones. And you would be less likely to slide under the lap belt. If you slid under it, the belt would apply force at your abdomen. This could cause serious or even fatal injuries. The shoulder belt should go over the shoulder and across the chest. These parts of the body are best able to take belt restraining forces.

The safety belt locks if there is a sudden stop or crash, or if you pull the belt very quickly out of the retractor.

Shoulder Belt Height Adjuster

Before you begin to drive, move the shoulder belt height adjuster to the height that is right for you.

Adjust the height so that the shoulder portion of the belt is centered on your shoulder. The belt should be away from your face and neck, but not falling off your shoulder.

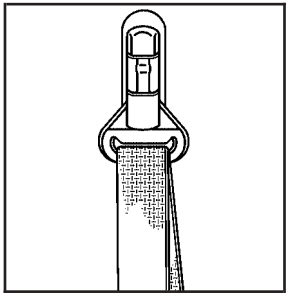

To move it up or down, squeeze the release buttons together and move the height adjuster to the desired position. After you move the adjuster to where you want it, try to move it down without squeezing the release buttons to make sure it has locked into position.

Q: What's wrong with this?

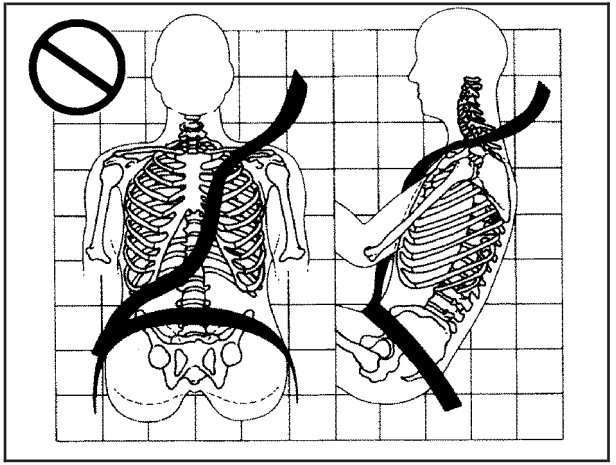

A: The shoulder belt is too loose. It will not give nearly as much protection this way.

⚠ CAUTION:

You can be seriously hurt if your shoulder belt is too loose. In a crash, you would move forward too much, which could increase injury. The shoulder belt should fit against your body.

Q: What's wrong with this?

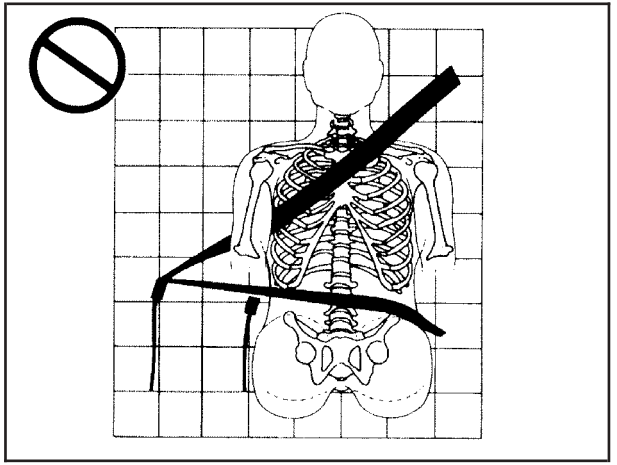

A: The belt is buckled in the wrong place.

⚠ CAUTION:

You can be seriously injured if your belt is buckled in the wrong place like this. In a crash, the belt would go up over your abdomen. The belt forces would be there, not at the pelvic bones. This could cause serious internal injuries. Always buckle your belt into the buckle nearest you.

Q: What's wrong with this?

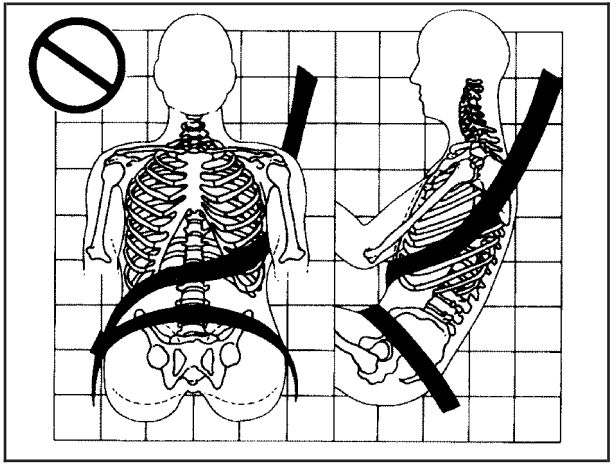

A: The shoulder belt is worn under the arm. It should be worn over the shoulder at all times.

⚠ CAUTION:

You can be seriously injured if you wear the shoulder belt under your arm. In a crash, your body would move too far forward, which would increase the chance of head and neck injury. Also, the belt would apply too much force to the ribs, which aren't as strong as shoulder bones. You could also severely injure internal organs like your liver or spleen.

Q: What's wrong with this?

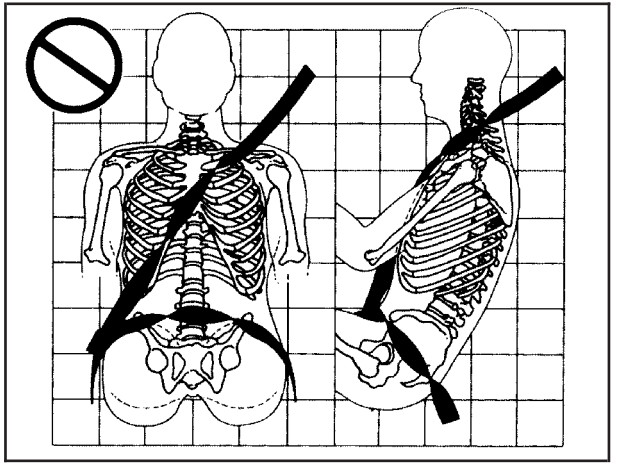

A: The belt is twisted across the body.

⚠ CAUTION:

You can be seriously injured by a twisted belt. In a crash, you wouldn't have the full width of the belt to spread impact forces. If a belt is twisted, make it straight so it can work properly, or ask your dealer to fix it.

To unlatch the belt, just push the button on the buckle. The belt should go back out of the way.

Before you close the door, be sure the belt is out of the way. If you slam the door on it, you can damage both the belt and your vehicle.

Safety Belt Use During Pregnancy

Safety belts work for everyone, including pregnant women. Like all occupants, they are more likely to be seriously injured if they don't wear safety belts.

A pregnant woman should wear a lap-shoulder belt, and the lap portion should be worn as low as possible, below the rounding, throughout the pregnancy.

The best way to protect the fetus is to protect the mother. When a safety belt is worn properly, it's more likely that the fetus won't be hurt in a crash. For pregnant women, as for anyone, the key to making safety belts effective is wearing them properly.

Right Front Passenger Position

To learn how to wear the right front passenger's safety belt properly, see *Driver Position on page 1-16*.

The right front passenger's safety belt works the same way as the driver's safety belt – except for one thing. If you ever pull the shoulder portion of the belt out all the way, you will engage the child restraint locking feature. If this happens, just let the belt go back all the way and start again.

Center Front Passenger Position

Lap Belt

If your vehicle has a 60/40 split front seat, someone can sit in the center position.

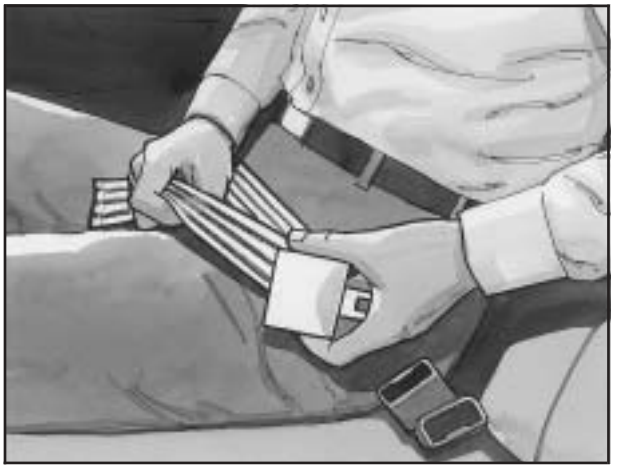

When you sit in the center front seating position, you have a lap safety belt, which has no retractor. To make the belt longer, tilt the latch plate and pull it along the belt.

To make the belt shorter, pull its free end as shown until the belt is snug.

Buckle, position and release it the same way as the lap part of a lap-shoulder belt. If the belt is not long enough, see *Safety Belt Extender on page 1-30*.

Make sure the release button on the buckle is positioned so you would be able to unbuckle the safety belt quickly if you ever had to.

Rear Seat Passengers

It is very important for rear seat passengers to buckle up! Accident statistics show that unbelted people in the rear seat are hurt more often in crashes than those who are wearing safety belts.

Rear passengers who are not safety belted can be thrown out of the vehicle in a crash. And they can strike others in the vehicle who are wearing safety belts.

Lap-Shoulder Belt

All rear seating positions have lap-shoulder belts. Here is how to wear one properly.

1. Pick up the latch plate and pull the belt across you. Do not let it get twisted.

   The shoulder belt may lock if you pull the belt across you very quickly. If this happens, let the belt go back slightly to unlock it. Then pull the belt across you more slowly.

2. Push the latch plate into the buckle until it clicks. Pull up on the latch plate to make sure it is secure.

   When the shoulder belt is pulled out all the way, it will lock. If it does, let it go back all the way and start again.

If the belt is not long enough, see *Safety Belt Extender on page 1-30*.

Make sure the release button on the buckle is positioned so you would be able to unbuckle the safety belt quickly if you ever had to.

3. To make the lap part tight, pull down on the buckle end of the belt as you pull up on the shoulder part.

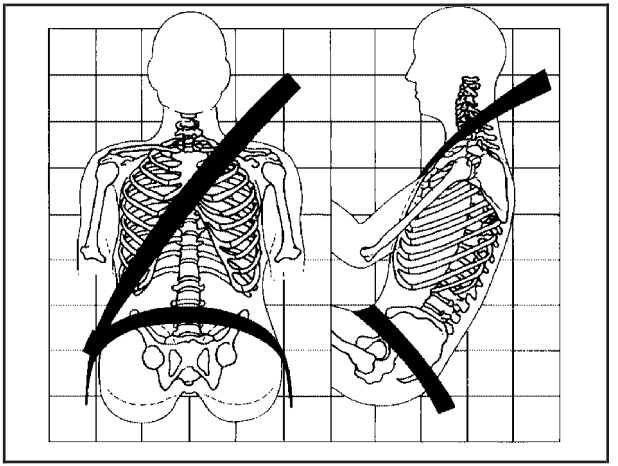

The lap part of the belt should be worn low and snug on the hips, just touching the thighs. In a crash, this applies force to the strong pelvic bones. And you would be less likely to slide under the lap belt. If you slid under it, the belt would apply force at your abdomen. This could cause serious or even fatal injuries. The shoulder belt should go over the shoulder and across the chest. These parts of the body are best able to take belt restraining forces.

The safety belt locks if there is a sudden stop or a crash.

The safety belt also locks if you pull the belt very quickly out of the retractor.

⚠ CAUTION:

You can be seriously hurt if your shoulder belt is too loose. In a crash, you would move forward too much, which could increase injury. The shoulder belt should fit against your body.

To unlatch the belt, just push the button on the buckle.

Rear Safety Belt Comfort Guides for Children and Small Adults

Your vehicle may have rear safety belt comfort guides for the rear outside positions.

Rear safety belt comfort guides provide added safety belt comfort for older children who have outgrown booster seats and for small adults. When attached to a shoulder belt, the comfort guide better positions the belt away from the neck and head.

Here is how to attach the comfort guide to the shoulder belt.

1. Slide the guide off of its storage clip located between the interior body and the seatback.

2. Slide the guide under and past the belt. The elastic cord must be under the belt. Then, place the guide over the belt and insert the two edges of the belt into the slots of the guide.

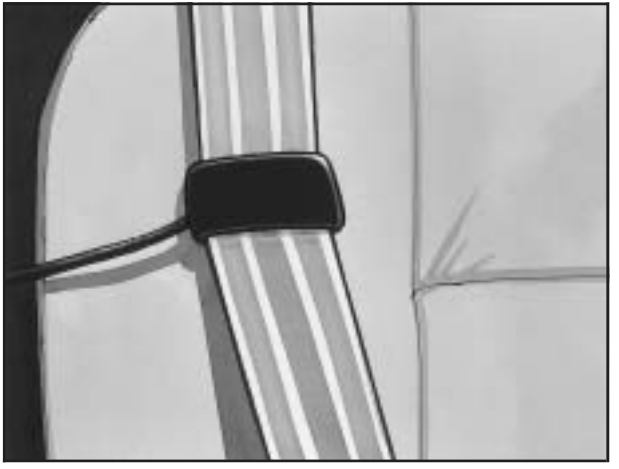

3. Be sure that the belt is not twisted and it lies flat. The elastic cord must be under the belt and the guide on top.

4. Buckle, position and release the safety belt as described in *Rear Seat Passengers on page 1-26*. Make sure that the shoulder belt crosses the shoulder.

To remove and store the comfort guides, squeeze the belt edges together so that you can take them out of the guides. Slide the guide back on its storage clip located between the interior body and the seatback.

Safety Belt Pretensioners

Your vehicle has safety belt pretensioners. Although you cannot see them, they are located on the retractor part of the safety belts for the driver and right front passenger. They help the safety belts reduce a person's forward movement in a moderate to severe crash in which the front of the vehicle hits something.

Pretensioners work only once. If they activate in a crash, you'll need to get new ones, and probably other new parts for your safety belt system. See *Replacing Restraint System Parts After a Crash on page 1-74*.

Safety Belt Extender

If the vehicle's safety belt will fasten around you, you should use it.

But if a safety belt isn't long enough to fasten, your dealer will order you an extender. It's free. When you go in to order it, take the heaviest coat you will wear, so the extender will be long enough for you. The extender will be just for you, and just for the seat in your vehicle that you choose. Don't let someone else use it, and use it only for the seat it is made to fit. To wear it, just attach it to the regular safety belt.

Child Restraints

Older Children

Older children who have outgrown booster seats should wear the vehicle's safety belts.

If you have a choice, a child should sit in a seat that has a lap-shoulder belt to get the additional restraint a shoulder belt can provide.

Q: What is the proper way to wear safety belts?

A: If possible, an older child should wear a lap-shoulder belt and get the additional restraint a shoulder belt can provide. The shoulder belt should not cross the face or neck. The lap belt should fit snugly below the hips, just touching the top of the thighs. It should never be worn over the abdomen, which could cause severe or even fatal internal injuries in a crash.

Accident statistics show that children are safer if they are restrained in a rear seat.

In a crash, children who are not buckled up can strike other people who are buckled up, or can be thrown out of the vehicle. Older children need to use safety belts properly.

⚠ CAUTION:

Never do this.

Here two children are wearing the same belt. The belt can't properly spread the impact forces. In a crash, the two children can be crushed together and seriously injured. A belt must be used by only one person at a time.

Q: What if a child is wearing a lap-shoulder belt, but the child is so small that the shoulder belt is very close to the child's face or neck?

A: If the child is sitting in a rear outside seat position, move the child toward the center of the vehicle. See *Rear Safety Belt Comfort Guides for Children and Small Adults on page 1-28*. If the child is sitting in the center rear seat of a crew cab, move the child toward the safety belt buckle. In either case be sure that the shoulder belt still is on the child's shoulder, so that in a crash the child's upper body would have the restraint that belts provide.

⚠ CAUTION:

Never do this.

Here a child is sitting in a seat that has a lap-shoulder belt, but the shoulder part is behind the child. If the child wears the belt in this way, in a crash the child might slide under the belt. The belt's force would then be applied right on the child's abdomen. That could cause serious or fatal injuries.

Wherever the child sits, the lap portion of the belt should be worn low and snug on the hips, just touching the child's thighs. This applies belt force to the child's pelvic bones in a crash.

Infants and Young Children

Everyone in a vehicle needs protection! This includes infants and all other children. Neither the distance traveled nor the age and size of the traveler changes the need, for everyone, to use safety restraints. In fact, the law in every state in the United States and in every Canadian province says children up to some age must be restrained while in a vehicle.

Every time infants and young children ride in vehicles, they should have the protection provided by appropriate restraints. Young children should not use the vehicle's adult safety belts alone, unless there is no other choice. Instead, they need to use a child restraint.

⚠ CAUTION:

People should never hold a baby in their arms while riding in a vehicle. A baby doesn't weigh much — until a crash. During a crash a baby will become so heavy it is not possible to

CAUTION: (Continued)

CAUTION: (Continued)

hold it. For example, in a crash at only 25 mph (40 km/h), a 12-lb. (5.5 kg) baby will suddenly become a 240-lb. (110 kg) force on a person's arms. A baby should be secured in an appropriate restraint.

⚠ CAUTION:

Children who are up against, or very close to, any air bag when it inflates can be seriously injured or killed. Air bags plus lap-shoulder belts offer outstanding protection for adults and older children, but not for young children and infants. Neither the vehicle's safety belt system nor its air bag system is designed for them. Young children and infants need the protection that a child restraint system can provide.

Q: What are the different types of add-on child restraints?

A: Add-on child restraints, which are purchased by the vehicle's owner, are available in four basic types. Selection of a particular restraint should take into consideration not only the child's weight, height and age but also whether or not the restraint will be compatible with the motor vehicle in which it will be used.

For most basic types of child restraints, there are many different models available. When purchasing a child restraint, be sure it is designed to be used in a motor vehicle. If it is, the restraint will have a label saying that it meets federal motor vehicle safety standards.

The restraint manufacturer's instructions that come with the restraint state the weight and height limitations for a particular child restraint. In addition, there are many kinds of restraints available for children with special needs.

⚠ CAUTION:

Newborn infants need complete support, including support for the head and neck. This is necessary because a newborn infant's neck is weak and its head weighs so much compared with the rest of its body. In a crash, an infant in a rear-facing seat settles into the restraint, so the crash forces can be distributed across the strongest part of an infant's body, the back and shoulders. Infants always should be secured in appropriate infant restraints.

⚠ CAUTION:

The body structure of a young child is quite unlike that of an adult or older child, for whom the safety belts are designed. A young child's hip bones are still so small that the vehicle's regular safety belt may not remain low on the hip bones, as it should. Instead, it may settle up around the child's abdomen. In a crash, the belt would apply force on a body area that's unprotected by any bony structure. This alone could cause serious or fatal injuries. Young children always should be secured in appropriate child restraints.

Child Restraint Systems

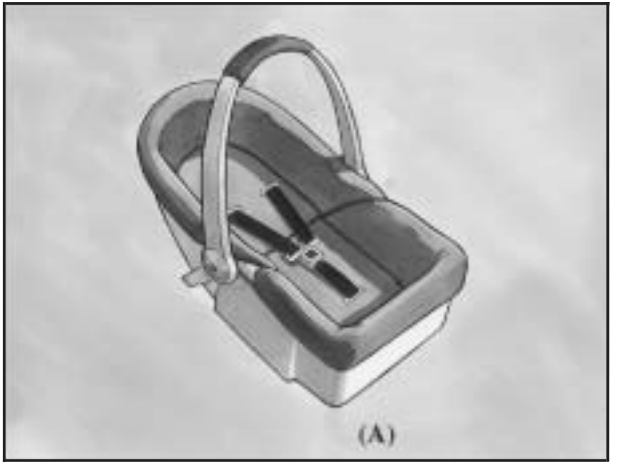

An infant car bed (A), a special bed made for use in a motor vehicle, is an infant restraint system designed to restrain or position a child on a continuous flat surface. Make sure that the infant's head rests toward the center of the vehicle.

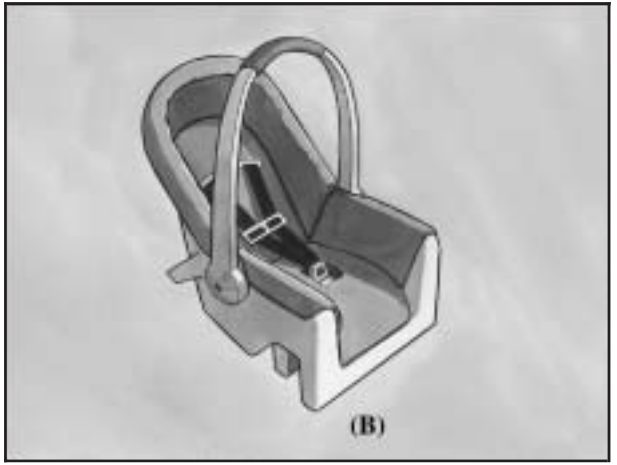

A rear-facing infant seat (B) provides restraint with the seating surface against the back of the infant. The harness system holds the infant in place and, in a crash, acts to keep the infant positioned in the restraint.

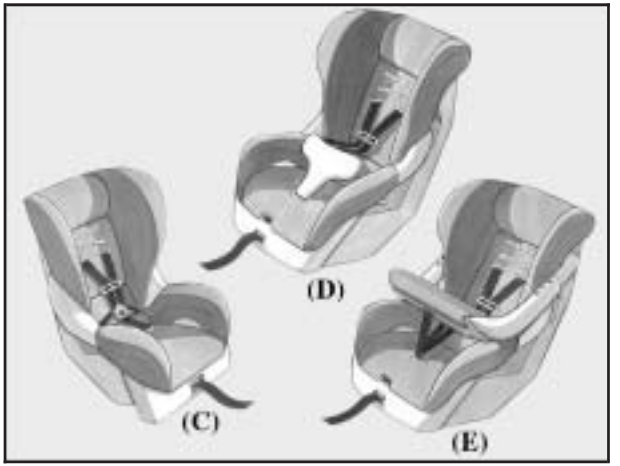

A forward-facing child seat (C-E) provides restraint for the child's body with the harness and also sometimes with surfaces such as T-shaped or shelf-like shields.

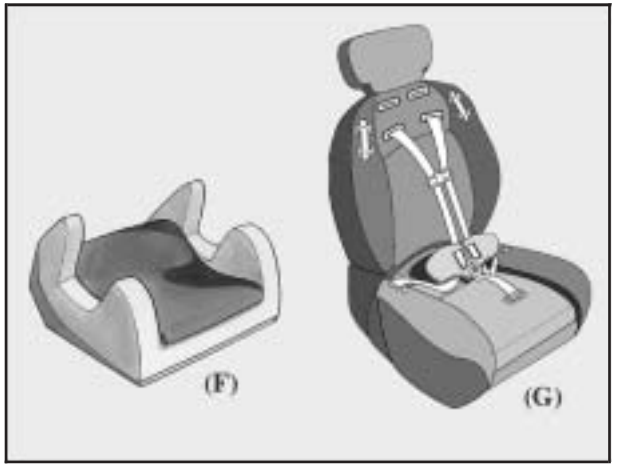

A booster seat (F-G) is a child restraint designed to improve the fit of the vehicle's safety belt system. Some booster seats have a shoulder belt positioner, and some high-back booster seats have a five-point harness. A booster seat can also help a child to see out the window.

Q: How do child restraints work?

A: A child restraint system is any device designed for use in a motor vehicle to restrain, seat, or position children. A built-in child restraint system is a permanent part of the motor vehicle. An add-on child restraint system is a portable one, which is purchased by the vehicle's owner.

For many years, add-on child restraints have used the adult belt system in the vehicle. To help reduce the chance of injury, the child also has to be secured within the restraint. The vehicle's belt system secures the add-on child restraint in the vehicle, and the add-on child restraint's harness system holds the child in place within the restraint.

One system, the three-point harness, has straps that come down over each of the infant's shoulders and buckle together at the crotch. The five-point harness system has two shoulder straps, two hip straps and a crotch strap. A shield may take the place of hip straps. A T-shaped shield has shoulder straps that are attached to a flat pad which rests low against the child's body. A shelf- or armrest-type shield has straps that are attached to a wide, shelf-like shield that swings up or to the side.

When choosing a child restraint, be sure the child restraint is designed to be used in a vehicle. If it is, it will have a label saying that it meets federal motor vehicle safety standards.

Then follow the instructions for the restraint. You may find these instructions on the restraint itself or in a booklet, or both. These restraints use the belt system or the LATCH system in your vehicle, but the child also has to be secured within the restraint to help reduce the chance of personal injury. When securing an add-on child restraint, refer to the instructions that come with the restraint which may be on the restraint itself or in a booklet, or both, and to this manual. The child restraint instructions are important, so if they are not available, obtain a replacement copy from the manufacturer.

Where to Put the Restraint

Accident statistics show that children are safer if they are restrained in the rear rather than the front seat. General Motors recommends that child restraints be secured in a rear seat including an infant riding in a rear-facing infant seat, a child riding in a forward-facing child seat and an older child riding in a booster seat. Never put a child in a rear-facing child restraint in the right front passenger seat unless your vehicle has an air bag off switch and the air bag off light shows off. Never put a rear-facing child restraint in the right front passenger seat unless the air bag is off. Here is why:

⚠ CAUTION:

A child in a rear-facing child restraint can be seriously injured or killed if the right front passenger's frontal air bag inflates. This is because the back of the rear-facing child restraint would be very close to the inflating air bag. Be sure to turn off the air bag before using a rear-facing child restraint in the right front seat position.

CAUTION: (Continued)

CAUTION: (Continued)

Even though the air bag off switch is designed to turn off the right front passenger's frontal air bag, no system is fail-safe, and no one can guarantee that an air bag will not deploy under some unusual circumstance, even though it is turned off. We recommend that rear-facing child restraints be transported in vehicles with a rear seat that will accommodate a rear-facing child restraint, whenever possible.

If you secure a forward-facing child restraint in the right front seat, always move the right front passenger seat as far back as it will go. It is better to secure the child restraint in a rear seat.

Do not use child restraints in the center front seat position. The restraints will not work properly.

If you need to secure a rear-facing child restraint in the right front passenger's position, the right front passenger's frontal air bag must be off. See *Securing a Child Restraint in the Right Front Seat Position (Models with an Air Bag Off Switch)* and *Securing a Child Restraint Designed for the LATCH System (Models with an Air Bag Off Switch)* in the Index, and *Air Bag Off Switch on page 1-70* for more on this including important safety information.

Wherever you install it, be sure to secure the child restraint properly.

Keep in mind that an unsecured child restraint can move around in a collision or sudden stop and injure people in the vehicle. Be sure to properly secure any child restraint in your vehicle – even when no child is in it.

Top Strap

Some child restraints have a top strap, or “top tether”. It can help restrain the child restraint during a collision. For it to work, a top strap must be properly anchored to the vehicle. Some top strap-equipped child restraints are designed for use with or without the top strap being anchored. Others require the top strap always to be anchored. Be sure to read and follow the instructions for your child restraint. If yours requires that the top strap be anchored, don’t use the restraint unless it is anchored properly.

If the child restraint does not have a top strap, one can be obtained, in kit form, for many child restraints. Ask the child restraint manufacturer whether or not a kit is available.

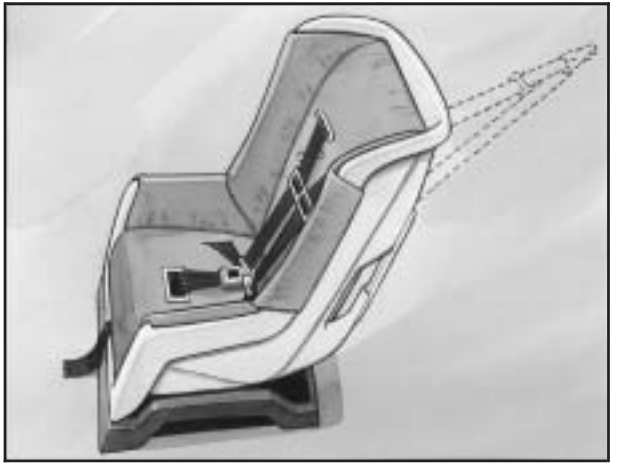

In Canada, the law requires that forward-facing child restraints have a top strap, and that the strap be anchored. In the United States, some child restraints also have a top strap. If your child restraint has a top strap, it should be anchored.

Anchor the top strap to one of the following anchor points. Be sure to use an anchor point located on the same side of the vehicle as the seating position where the child restraint will be placed. If you have an adjustable head restraint, route the top strap over it.

When using a top strap-equipped child restraint in a rear outboard seating position of a crew cab model, route the top strap over the top of the seatback. Then, attach it to the anchor point for that seating position.

⚠ CAUTION:

Each top tether bracket is designed to anchor only one child restraint. Attaching more than one child restraint to a single bracket could cause the anchor to come loose or even break during a crash. A child or others could be injured if this happens. To help prevent injury to people and damage to your vehicle, attach only one child restraint per bracket.

Once you have the top strap anchored, you'll be ready to secure the child restraint itself. Tighten the top strap when and as the child restraint manufacturer's instructions say.

Top Strap Anchor Location

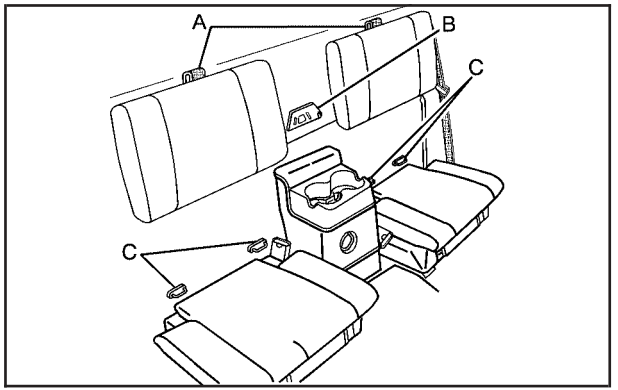

Extended cab anchors shown

A. Top strap routing loops

B. Top strap anchors

C. LATCH anchors. See *Lower Anchorages and Top Tethers for Children (LATCH System) on page 1-46*.

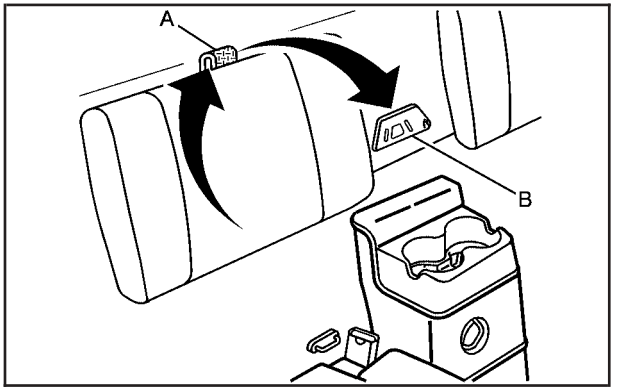

Anchor points for the top strap in a regular or extended cab vehicle are located behind the front seat on the back wall of the passenger compartment. You must route the top strap through the loop (A) at the top of the seatback to attach the strap to the anchor (B) as shown.

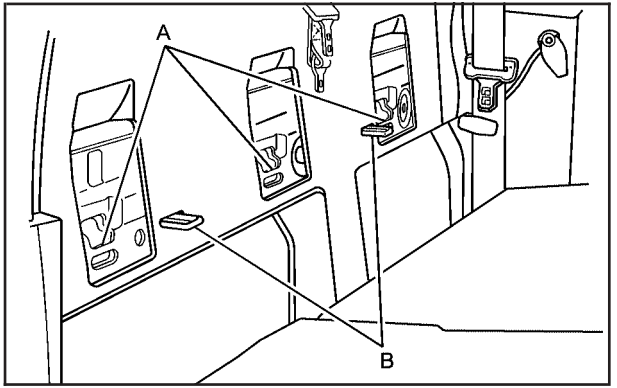

Crew Cab

The anchor points for the top strap on Crew Cab vehicles are located on the back wall behind the rear seat. You must pull the seatback forward to access the anchors.

Follow these steps to access the anchors and attach the top strap to an anchor:

1. Release the rear seatback from its latches (B). See *Rear Seat Operation (Crew Cab) on page 1-9* or *Rear Seat Operation (Extended Cab) on page 1-10* for instructions.
2. Attach the top strap to the anchor (A).
3. Push rearward on the seatback until it locks into its upright position.

   Push and pull on the seatback to make sure it is secured properly.

Lower Anchorages and Top Tethers for Children (LATCH System)

Your vehicle may be equipped with the LATCH System. If it is you will find anchors (A) in the second row outboard seating positions (crew cab and extended cab) and in the front passenger position (regular cab and extended cab without rear seats).

This system, designed to make installation of child restraints easier, does not use the vehicle's safety belts. Instead, it uses vehicle anchors (A, B) and child restraint attachments to secure the restraints. Some restraints also use another vehicle anchor to secure a top tether strap (C).

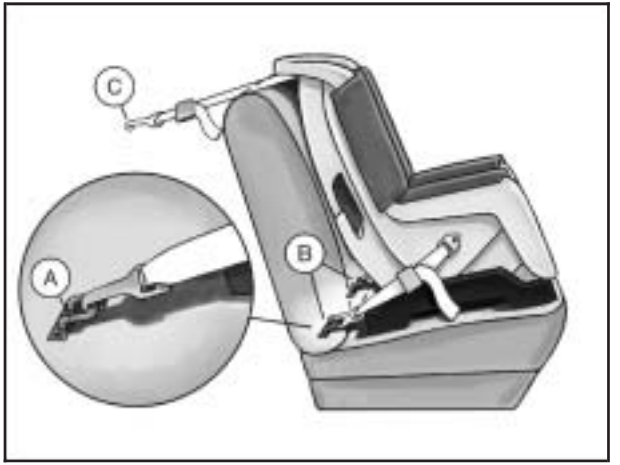

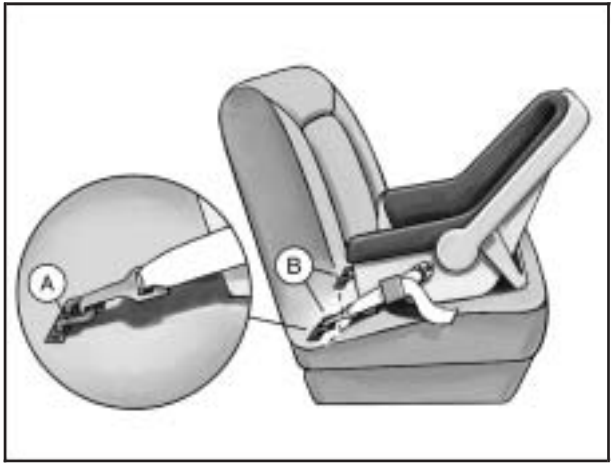

In order to use the LATCH system in your vehicle, you need a child restraint designed for that system.

To assist you in locating the anchors for this child restraint system, place your hand in a palm-up position and reach up between the seat cushion and the seatback.

⚠ CAUTION:

If a LATCH-type child restraint is not attached to its anchorage points, the restraint will not be able to protect the child correctly. In a crash, the child could be seriously injured or killed. Make sure that a LATCH-type child restraint is properly installed using the anchorage points, or use the vehicle's safety belts to secure the restraint, following the instructions that came with that restraint, and also the instructions in this manual.

Securing a Child Restraint Designed for the LATCH System (Models with an Air Bag Off Switch)

Regular Cab Models and Extended Cab Models without Rear Seats

Your vehicle has air bags. Regular cab models and extended cab models without rear seats have an air bag off switch on the instrument panel you can use to turn off the right front passenger's frontal air bag. See *Air Bag Off Switch on page 1-70* for more on this including important safety information.

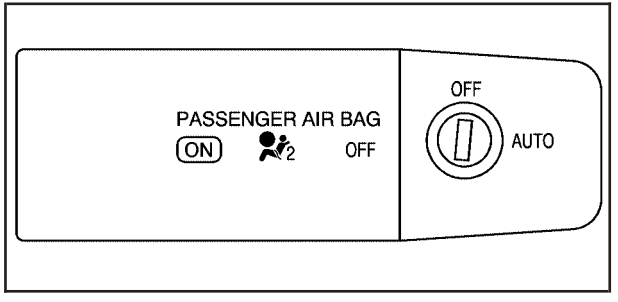

Unless the right front passenger's frontal air bag has been turned off, *never* put a rear-facing child restraint in this vehicle. Here is why:

⚠ CAUTION:

A child in a rear-facing child restraint can be seriously injured or killed if the right front passenger's frontal air bag inflates. This is because the back of the rear-facing child restraint would be very close to the inflating air bag. Do not use a rear-facing child restraint in this vehicle unless the air bag has been turned off.

Even though the air bag off switch is designed to turn off the right front passenger's frontal air bag, no system is fail-safe, and no one can guarantee that an air bag will not deploy under some unusual circumstance, even though it is turned off. We recommend that rear-facing child restraints be transported in vehicles with a rear seat that will accommodate a rear-facing child restraint, whenever possible.

⚠ CAUTION:

If the air bag readiness light ever comes on when you have turned off the air bag, it means that something may be wrong with the air bag system. The right front passenger's frontal air bag could inflate even though the switch is off. If this ever happens, do not let anyone whom the national government has identified as a member of a passenger air bag risk group sit in the right front passenger's position (for example, do not secure a rear-facing child restraint in your vehicle) until you have your vehicle serviced. See *Air Bag Off Switch on page 1-70*.

1. Your vehicle has a right front passenger's frontal air bag. See *Air Bag Off Switch on page 1-70*. If your child restraint is forward-facing, always move the seat as far back as it will go before securing it in this seat. See *Manual Seats on page 1-3* or *Power Seats on page 1-4*. Never use a rear-facing child restraint in this seat unless the air bag is off.
2. Find the LATCH anchorages in the passenger seat. See *Lower Anchorages and Top Tethers for Children (LATCH System) on page 1-46*.
3. Put the child restraint on the seat.
4. Attach and tighten the LATCH attachments on the child restraint to the LATCH anchorages in the vehicle. The child restraint instructions will show you how.

5. If the child restraint is forward-facing, attach and tighten the top tether to the top tether anchorage if your vehicle has one. The child restraint instructions will show you how. Also see *Top Strap on page 1-42*.
6. Push and pull the child restraint in different directions to be sure it is secure.

To remove the child restraint, simply unhook the top tether from the top tether anchorage and then disconnect the LATCH anchorages.

Turn on the right front passenger's frontal air bag when you remove the child restraint from the vehicle unless the person who will be sitting there is a member of a passenger air bag risk group. See *Air Bag Off Switch on page 1-70*.

⚠ CAUTION:

If the right front passenger's frontal air bag is turned off for a person who is not in a risk group identified by the national government, that person will not have the extra protection of an air bag. In a crash, the air bag would not be able to inflate and help protect the person sitting there. Do not turn off the right front passenger's frontal air bag unless the person sitting there is in a risk group. See *Air Bag Off Switch on page 1-70* for more on this, including important safety information.

Securing a Child Restraint Designed for the LATCH System (Models without an Air Bag Off Switch)

Crew Cab Models and Extended Cab Models with Rear Seats

1. Find the LATCH anchorages for the seating position you want to use, where the bottom of the seatback meets the back of the seat cushion. See *Lower Anchorages and Top Tethers for Children (LATCH System) on page 1-46*.
2. Put the child restraint on the seat.
3. Attach and tighten the LATCH attachments on the child restraint to the LATCH anchorages in the vehicle. The child restraint instructions will show you how.
4. If the child restraint is forward-facing, attach and tighten the top tether to the top tether anchorage. The child restraint instructions will show you how. Also see *Top Strap on page 1-42*.
5. Push and pull the child restraint in different directions to be sure it is secure.

To remove the child restraint, simply unhook the top tether from the top tether anchorage and then disconnect the LATCH attachments from the LATCH anchorages.

Securing a Child Restraint in a Rear Seat Position

If your child restraint is equipped with the LATCH system, see *Lower Anchorages and Top Tethers for Children (LATCH System) on page 1-46*. See *Top Strap on page 1-42* if the child restraint has one.

If your child restraint does not have the LATCH system, you will be using the lap-shoulder belt to secure the child restraint in this position. Be sure to follow the instructions that came with the child restraint. Secure the child in the child restraint when and as the instructions say.

1. Put the child restraint on the seat.
2. Pick up the latch plate, and run the lap and shoulder portions of the vehicle's safety belt through or around the restraint. The child restraint instructions will show you how.

3. Buckle the belt. Make sure the release button is positioned so you would be able to unbuckle the safety belt quickly if you ever had to.

4. Pull the rest of the shoulder belt all the way out of the retractor to set the lock (crew cab only).

5. To tighten the belt, push down on the child restraint, pull the shoulder portion of the belt to tighten the lap portion of the belt and feed the shoulder belt back into the retractor. If you are using a forward-facing child restraint, you may find it helpful to use your knee to push down on the child restraint as you tighten the belt.
6. Push and pull the child restraint in different directions to be sure it is secure.

To remove the child restraint, just unbuckle the vehicle's safety belt and let it go back all the way. The safety belt will move freely again and be ready to work for an adult or larger child passenger.

Securing a Child Restraint in the Center Front Seat Position

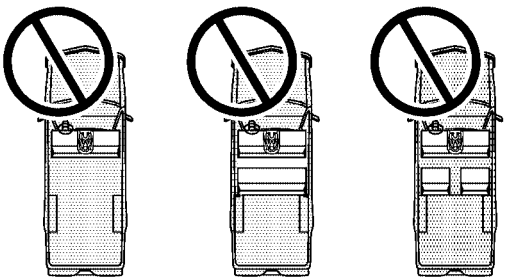

Do not use child restraints in this position. The restraints will not work properly.

Securing a Child Restraint in the Right Front Seat Position (Models with an Air Bag Off Switch)

Regular Cab Models and Extended Cab Models without Rear Seats

Your vehicle has a right front passenger's frontal air bag. Regular cab models and extended cab models without rear seats have a switch on the instrument panel that you can use to turn off the right front passenger's frontal air bag. See *Air Bag Off Switch on page 1-70* for more on this, including important safety information.

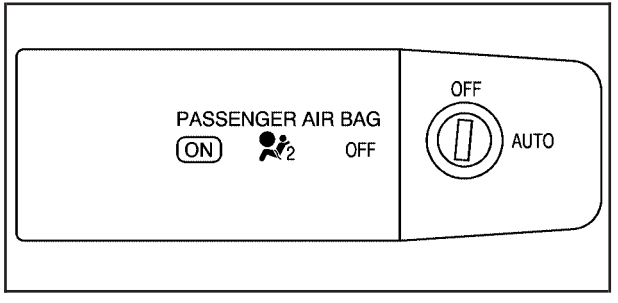

Unless the right front passenger's frontal air bag has been turned off, never put a rear facing child restraint in the right front passenger's seat. Here is why:

⚠ CAUTION:

A child in a rear-facing child restraint can be seriously injured or killed if the right front passenger's frontal air bag inflates. This is because the back of the rear-facing child restraint would be very close to the inflating air bag. Do not use a rear-facing child restraint in this vehicle unless the air bag has been turned off.

Even though the air bag off switch is designed to turn off the right front passenger's frontal air bag, no system is fail-safe, and no one can guarantee that an air bag will not deploy under some unusual circumstance, even though it is turned off. We recommend that rear-facing child restraints be transported in vehicles with a rear seat that will accommodate a rear-facing child restraint, whenever possible.

⚠ CAUTION:

If the air bag readiness light ever comes on when you have turned off the air bag, it means that something may be wrong with the air bag system. The right front passenger's frontal air bag could inflate even though the switch is off. If this ever happens, do not let anyone whom the national government has identified as a member of a passenger air bag risk group sit in the right front passenger's position (for example, do not secure a rear-facing child restraint in your vehicle) until you have your vehicle serviced. See *Air Bag Off Switch on page 1-70*.

If your child restraint is equipped with the LATCH system, see *Lower Anchorages and Top Tethers for Children (LATCH System) on page 1-46*. See *Top Strap on page 1-42* if the child restraint has one.

If your child restraint does not have the LATCH system, you will be using the lap-shoulder belt to secure the child restraint in this position. Be sure to follow the instructions that came with the child restraint. Secure the child in the child restraint when and as the instructions say.

1. Your vehicle has a right front passenger's frontal air bag. See *Air Bag Off Switch on page 1-70*. If your child restraint is forward-facing, always move the seat as far back as it will go before securing it in this seat. See *Manual Seats on page 1-3* or *Power Seats on page 1-4*.
2. Put the child restraint on the seat.
3. Pick up the latch plate, and run the lap and shoulder portions of the vehicle's safety belt through or around the restraint. The child restraint instructions will show you how.

4. Buckle the belt. Make sure the release button is positioned so you would be able to unbuckle the safety belt quickly if you ever had to.

5. Pull the rest of the shoulder belt all the way out of the retractor to set the lock.

6. To tighten the belt, push down on the child restraint, pull the shoulder portion of the belt to tighten the lap portion of the belt and feed the shoulder belt back into the retractor. If you are using a forward-facing child restraint, you may find it helpful to use your knee to push down on the child restraint as you tighten the belt.
7. Push and pull the child restraint in different directions to be sure it is secure.

To remove the child restraint, just unbuckle the vehicle's safety belt and let it go back all the way. The safety belt will move freely again and be ready to work for an adult or larger child passenger.

If you were using a rear-facing child restraint, turn on the right front passenger's frontal air bag when you remove the rear-facing child restraint from the vehicle unless the person who will be sitting there is a member of a passenger air bag risk group. See *Air Bag Off Switch on page 1-70*.

⚠ CAUTION:

If the right front passenger's frontal air bag is turned off for a person who is not in a risk group identified by the national government, that person will not have the extra protection of an air bag. In a crash, the air bag would not be able to inflate and help protect the person sitting there. Do not turn off the right front passenger's frontal air bag unless the person sitting there is in a risk group. See *Air Bag Off Switch on page 1-70* for more on this, including important safety information.

Securing a Child Restraint in the Right Front Seat Position (Models without an Air Bag Off Switch)

Crew Cab Models and Extended Cab Models with Rear Seats

If your child restraint is equipped with the LATCH system, see *Lower Anchorages and Top Tethers for Children (LATCH System) on page 1-46*. See *Top Strap on page 1-42* if the child restraint has one.

Your vehicle has a right front passenger air bag. *Never* put a rear-facing child restraint in the right front passenger's seat. Here is why:

⚠ CAUTION:

A child in a rear-facing child restraint can be seriously injured or killed if the right front passenger's air bag inflates. This is because the back of the rear-facing child restraint would be very close to the inflating air bag. Always secure a rear-facing child restraint in a rear seat.

A rear seat is a safer place to secure a forward-facing child restraint. If you need to secure a forward-facing child restraint in the right front seat position, see *Where to Put the Restraint on page 1-40*.

If your child restraint does not have the LATCH system, you will be using the lap-shoulder belt to secure the child restraint in this position. Be sure to follow the instructions that came with the child restraint. Secure the child in the child restraint when and as the instructions say.

1. Because your vehicle has a right front passenger's frontal air bag, always move the seat as far back as it will go before securing a forward-facing child restraint. See *Manual Seats on page 1-3* or *Power Seats on page 1-4*.
2. Put the child restraint on the seat.
3. Pick up the latch plate, and run the lap and shoulder portions of the vehicle's safety belt through or around the restraint. The child restraint instructions will show you how.

4. Buckle the belt. Make sure the release button is positioned so you would be able to unbuckle the safety belt quickly if you ever had to.

5. Pull the rest of the shoulder belt all the way out of the retractor to set the lock.

6. To tighten the belt, push down on the child restraint, pull the shoulder portion of the belt to tighten the lap portion of the belt and feed the shoulder belt back into the retractor. If you are using a forward-facing child restraint, you may find it helpful to use your knee to push down on the child restraint as you tighten the belt.
7. Push and pull the child restraint in different directions to be sure it is secure.

To remove the child restraint, just unbuckle the vehicle's safety belt and let it go back all the way. The safety belt will move freely again and be ready to work for an adult or larger child passenger.

Air Bag Systems

This part explains the air bag systems.

Your vehicle has air bags – one air bag for the driver and another air bag for the right front passenger. Your vehicle may also have roof-mounted side impact air bags; one for the driver and the passenger directly behind the driver and one for the right front passenger and the person seated directly behind that passenger.

Air bags are designed to help reduce the risk of injury from the force of an inflating air bag. But these air bags must inflate very quickly to do their job and comply with federal regulations.

Here are the most important things to know about the air bag system:

⚠ CAUTION:

You can be severely injured or killed in a crash if you are not wearing your safety belt – even if you have air bags. Wearing your safety belt during a crash helps reduce your chance of hitting things inside the vehicle or being ejected from it. Air bags are "supplemental restraints" to the safety belts. All air bags are designed to work with safety belts but do not replace them.

CAUTION: (Continued)

CAUTION: (Continued)

Frontal air bags for the driver and right front passenger are designed to work only in moderate to severe crashes where the front of your vehicle hits something. They are not designed to inflate in rollover, rear or low-speed frontal crashes, or in many side crashes. And, for some unrestrained occupants, frontal air bags may provide less protection in frontal crashes than more forceful air bags have provided in the past. The roof-mounted side impact air bags are designed to inflate only in moderate to severe crashes where something hits the side of your vehicle. They are not designed to inflate in frontal, in rollover or in rear crashes. Everyone in your vehicle should wear a safety belt properly — whether or not there is an air bag for that person.

⚠ CAUTION:

Both frontal and side impact air bags inflate with great force, faster than the blink of an eye. If you're too close to an inflating air bag, as you would be if you were leaning forward, it could seriously injure you. Safety belts help keep you in position for air bag inflation before and during a crash. Always wear your safety belt even with frontal air bags. The driver should sit as far back as possible while still maintaining control of the vehicle. Occupants should not lean on or sleep against the door.

⚠ CAUTION:

Anyone who is up against, or very close to, any air bag when it inflates can be seriously injured or killed. Air bags plus lap-shoulder belts offer the best protection for adults, but not for young children and infants. Neither the vehicle's safety belt system nor its air bag system is designed for them. Young children and infants need the protection that a child restraint system can provide. Always secure children properly in your vehicle. To read how, see the part of this manual called "Older Children" or "Infants and Young Children."

There is a air bag readiness light on the instrument panel which shows the air bag symbol.

The system checks the air bag electrical system for malfunctions. The light tells you if there is an electrical problem. See *Air Bag Readiness Light on page 3-25* for more information.

Where Are the Air Bags?

The driver's air bag is in the middle of the steering wheel.

The right front passenger's air bag is in the instrument panel on the passenger's side.

If your vehicle has a roof-mounted side impact air bag for the driver and the person seated directly behind the driver, it is located in the ceiling above the side windows.

If your vehicle has a roof-mounted side impact air bag for the right front passenger and the person seated directly behind that passenger, it is located in the ceiling above the side windows.

⚠ CAUTION:

If something is between an occupant and an air bag, the bag might not inflate properly or it might force the object into that person causing severe injury or even death. The path of an inflating air bag must be kept clear. Do not put anything between an occupant and an air bag, and do not attach or put anything on the steering wheel hub or on or near any other air bag covering. If your vehicle has side impact air bags, never secure anything to the roof of your vehicle by routing the rope or tiedown through any door or window opening. If you do, the path of an inflating side impact air bag will be blocked. The path of an inflating air bag must be kept clear.

When Should an Air Bag Inflate?

The driver's and right front passengers frontal air bags are designed to deploy only in moderate to severe frontal, or near-frontal crashes. But they are designed to inflate only if the impact speed is above the system's designed "threshold level."

In addition, your vehicle has "dual stage" frontal air bags, which adjust the amount of restraint according to crash severity. For moderate frontal impacts, these air bags inflate at a level less than full deployment. For more severe frontal impacts, full deployment occurs. If the front of your vehicle goes straight into a wall that doesn't move or deform, the threshold level for the reduced deployment is about 12 to 16 mph (19.3 to 26 km/h), and the threshold level for a full deployment is about 20 to 24 mph (32.2 to 38.5 km/h). The threshold level can vary, however, with specific vehicle design, so that it can be somewhat above or below this range.

If your vehicle strikes something that will move or deform, such as a parked car, the threshold level will be higher. The driver's and right front passenger's frontal air bags are not designed to inflate in rollovers, rear impacts, or in many side impacts because inflation would not help the occupant.

The side impact air bags are designed to inflate in moderate to severe side crashes. A side impact air bag will inflate if the crash severity is above the system's designed "threshold level". The threshold level can vary with specific vehicle design. Side impact air bags are not designed to inflate in frontal or near-frontal impacts, rollovers or rear impacts, because inflation would not help the occupant. A side impact air bag will only deploy on the side of the vehicle that is struck.

Your vehicle has seat position sensors which enable the sensing system to monitor the position of the driver's seat and the right front passenger's seat. Seat position sensors provide information that is used to determine if the air bags should deploy at a reduced level or at full deployment.

In any particular crash, no one can say whether an air bag should have inflated simply because of the damage to a vehicle or because of what the repair costs were. For frontal air bags, inflation is determined by the angle of the impact and how quickly the vehicle slows down in frontal or near-frontal impacts. For side impact air bags, inflation is determined by the location and severity of the impact.

What Makes an Air Bag Inflate?

In an impact of sufficient severity, the air bag sensing system detects that the vehicle is in a crash. For both frontal and side impact air bags, the sensing system triggers a release of gas from the inflator, which inflates the air bag. The inflator, air bag, and related hardware are all part of the air bag modules inside the steering wheel and in the instrument panel in front of the right front passenger. For vehicles with side impact air bags, the air bag modules are located in the ceiling of the vehicle, near the side windows.

How Does an Air Bag Restrain?

In moderate to severe frontal or near frontal collisions, even belted occupants can contact the steering wheel or the instrument panel. In moderate to severe side collisions, even belted occupants can contact the inside of the vehicle. The air bag supplements the protection provided by safety belts. Air bags distribute the force of the impact more evenly over the occupant's upper body, stopping the occupant more gradually. But the frontal air bags would not help you in many types of collisions, including rollovers, rear impacts, and many side impacts, primarily because an occupant's motion is not toward the air bag. Side impact air bags would not help you in many types of collisions, including frontal or near frontal collisions, rollovers, and rear impacts, primarily because an occupant's motion is not toward those air bags. Air bags should never be regarded as anything more than a supplement to safety belts, and then only in moderate to severe frontal or near-frontal collisions for the driver's and right front passenger's frontal air bags, and only in moderate to severe side collisions for the side impact air bags.

What Will You See After an Air Bag Inflates?

After an air bag inflates, it quickly deflates, so quickly that some people may not even realize the air bag inflated. Some components of the air bag module — the steering wheel hub for the driver's air bag, the instrument panel for the right front passenger's bag or the ceiling of your vehicle near the side windows — will be hot for a short time. The parts of the bag that come into contact with you may be warm, but not too hot to touch. There will be some smoke and dust coming from the vents in the deflated air bags. Air bag inflation does not prevent the driver from seeing or being able to steer the vehicle, nor does it stop people from leaving the vehicle.

⚠ CAUTION:

When an air bag inflates, there is dust in the air. This dust could cause breathing problems for people with a history of asthma or other breathing trouble. To avoid this, everyone in the vehicle should get out as soon as it is safe to do so. If you have breathing problems but can't get out of the vehicle after an air bag inflates, then get fresh air by opening a window or a door. If you experience breathing problems following an air bag deployment, you should seek medical attention.

Your vehicle has a feature that will automatically unlock the doors, turn the interior lamps on and flash the hazard warning flashers when the air bag inflates (if battery power is available). You can lock the doors again by using the door lock. The interior lamps and hazard warning flashers will deactivate after approximately 15 minutes.

In many crashes severe enough to inflate an air bag, windshields are broken by vehicle deformation. Additional windshield breakage may also occur from the right front passenger air bag.

- Air bags are designed to inflate only once. After an air bag inflates, you will need some new parts for your air bag system. If you do not get them, the air bag system will not be there to help protect you in another crash. A new system will include air bag modules and possibly other parts. The service manual for your vehicle covers the need to replace other parts.
- Your vehicle is equipped with electronic frontal sensors which help the sensing system distinguish between a moderate and a more severe frontal impact. If your vehicle has side impact air bags, it also has electronic side sensors. Your vehicle is equipped with a crash sensing and diagnostic module, which records information about the air bag system. The module records information about the readiness of the system and when the system commands air bag inflation. It records the status of the driver's safety belt usage in a crash in which the air bag deploys or a crash in which the air bag nearly deploys. The module also records speed, engine rpm, brake and throttle data.
- Let only qualified technicians work on your air bag system. Improper service can mean that your air bag system will not work properly. See your dealer for service.

Notice: **If you damage the covering for the driver's or the right front passenger's air bag, or the side impact air bag covering on the ceiling near the side windows, the bag may not work properly. You may have to replace the air bag module in the steering wheel, both the air bag module and the instrument panel for the right front passenger's air bag, or side impact air bag module and ceiling covering for the roof-mounted side impact air bag. Do not open or break the air bag coverings.**

Air Bag Off Switch

Regular Cab Models and Extended Cab Models without Rear Seats

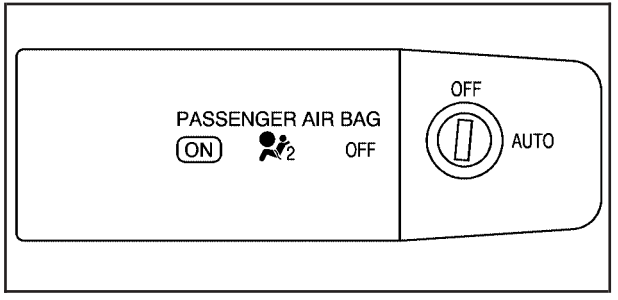

If your vehicle is a regular cab model or an extended cab model without rear seats, it has a switch on the instrument panel that you can use to turn off the right front passenger's frontal air bag.

This switch should only be turned to the off position if the person in the right front passenger's position is a member of a passenger risk group identified by the national government as follows:

Infant. An infant (less than 1 year old) must ride in the front seat because:

- *my vehicle has no rear seat;*
- *my vehicle has a rear seat too small to accommodate a rear-facing infant seat; or*
- *the infant has a medical condition which, according to the infant's physician, makes it necessary for the infant to ride in the front seat so that the driver can constantly monitor the child's condition.*

Child age 1 to 12. A child age 1 to 12 must ride in the front seat because:

- *my vehicle has no rear seat;*
- *although children ages 1 to 12 ride in the rear seat(s) whenever possible, children ages 1 to 12 sometimes must ride in the front because no space is available in the rear seat(s) of my vehicle; or*
- *the child has a medical condition which, according to the child's physician, makes it necessary for the child to ride in the front seat so that the driver can constantly monitor the child's condition.*

Medical Condition. A passenger has a medical condition which, according to his or her physician:

- *causes the passenger air bag to pose a special risk for the passenger; and*
- *makes the potential harm from the passenger air bag in a crash greater than the potential harm from turning off the air bag and allowing the passenger, even if belted, to hit the dashboard or windshield in a crash.*

⚠ CAUTION:

If the right front passenger's frontal air bag is turned off for a person who is not in a risk group identified by the national government, that person will not have the extra protection of an air bag. In a crash, the air bag would not be able to inflate and help protect the person sitting there. Do not turn off the passenger's frontal air bag unless the person sitting there is in a risk group.

To turn off the right front passenger's frontal air bag, insert your ignition key into the switch, push in, and move the switch to the off position.

The air bag off light will come on to let you know that the right front passenger's frontal air bag is off. The right front passenger's frontal air bag will remain off until you turn it back on again, and the air bag off light will stay on to remind you that the air bag is off.

⚠ CAUTION:

If the air bag readiness light ever comes on when you have turned off the air bag, it means that something may be wrong with the air bag system. The right front passenger's frontal air bag could inflate even though the switch is off. If this ever happens, do not let anyone whom the national government has identified as a member of a passenger air bag risk group sit in the right front passenger's position (for example, do not secure a rear-facing child restraint in the right front passenger's seat) until you have your vehicle serviced.

To turn the right front passenger's frontal air bag on again, insert your ignition key into the switch, push in, and move the switch to the auto position.

Servicing Your Air Bag-Equipped Vehicle

Air bags affect how your vehicle should be serviced. There are parts of the air bag systems in several places around your vehicle. Your dealer and the service manual have information about servicing your vehicle and the air bag systems.To purchase a service manual, see *Service Publications Ordering Information on page 7-11*.

⚠ CAUTION:

For up to 10 seconds after the ignition key is turned off and the battery is disconnected, an air bag can still inflate during improper service. You can be injured if you are close to an air bag when it inflates. Avoid wires wrapped with yellow tape or yellow connectors. They are probably part of the air bag system. Be sure to follow proper service procedures, and make sure the person performing work for you is qualified to do so.

The air bag systems do not need regular maintenance.

Adding Equipment to Your Air Bag-Equipped Vehicle

Q: Is there anything I might add to the front of the vehicle that could keep the air bags from working properly?

A: Yes. If you add things that change your vehicle's frame, bumper system, front end sheet metal or height, they may keep the air bag system from working properly. Also, the air bag system may not work properly if you relocate any of the air bag sensors. If you have any questions about this, you should contact Customer Assistance before you modify your vehicle. The phone numbers and addresses for Customer Assistance are in Step Two of the *Customer Satisfaction Procedure on page 7-2*.

Restraint System Check

Checking Your Restraint Systems

Now and then, make sure the safety belt reminder light and all your belts, buckles, latch plates, retractors and anchorages are working properly. Look for any other loose or damaged safety belt system parts. If you see anything that might keep a safety belt system from doing its job, have it repaired.

Torn or frayed safety belts may not protect you in a crash. They can rip apart under impact forces. If a belt is torn or frayed, get a new one right away.

Also look for any opened or broken air bag covers, and have them repaired or replaced. (The air bag system does not need regular maintenance.)

Replacing Restraint System Parts After a Crash

⚠ CAUTION:

A crash can damage the restraint systems in your vehicle. A damaged restraint system may not properly protect the person using it, resulting in serious injury or even death in a crash. To help make sure your restraint systems are working properly after a crash, have them inspected and any necessary replacements made as soon as possible.

If you have had a crash, do you need new belts or LATCH system parts?

After a very minor collision, nothing may be necessary. But if the belts were stretched, as they would be if worn during a more severe crash, then you need new parts.

If the LATCH system was being used during a more severe crash, you may need new LATCH system parts.

If belts are cut or damaged, replace them. Collision damage also may mean you will need to have LATCH system, safety belt or seat parts repaired or replaced. New parts and repairs may be necessary even if the belt or LATCH system was not being used at the time of the collision.

If an air bag inflates, you will need to replace air bag system parts. See the part on the air bag system earlier in this section.

If the frontal air bags inflate, you will also need to replace the driver's and right front passenger's safety belt retractor assembly. Be sure to do so. Then the new retractor assembly will be there to help protect you in a collision.

After a crash you may need to replace the driver and front passenger's safety belt retractor assemblies, even if the frontal air bags have not deployed. The driver and front passenger's safety belt retractor assemblies contain the safety belt pretensioners. Have your safety belt pretensioners checked if your vehicle has been in a collision, or if your air bag readiness light stays on after you start your vehicle or while you are driving. See *Air Bag Readiness Light on page 3-25*.

Section 2 Features and Controls

Keys 2-2
Remote Keyless Entry System 2-4
Remote Keyless Entry System Operation 2-5
Doors and Locks 2-7
Door Locks 2-7
Power Door Locks 2-8
Programmable Automatic Door Locks 2-8
Rear Door Security Locks (Crew Cab) 2-9
Lockout Protection 2-9
Leaving Your Vehicle 2-10
Rear Doors (Extended Cab) 2-10
Tailgate 2-10
Windows 2-12
Manual Windows 2-12
Power Windows 2-13
Sliding Rear Window 2-14
Sun Visors 2-14
Theft-Deterrent Systems 2-14
Content Theft-Deterrent 2-14
Passlock® 2-16
Starting and Operating Your Vehicle 2-16
New Vehicle Break-In 2-16
Ignition Positions 2-17
Starting Your Engine 2-18
Engine Coolant Heater 2-20
Automatic Transmission Operation 2-21
Manual Transmission Operation 2-24
Four-Wheel Drive 2-26
Parking Brake 2-29
Shifting Into Park (P) (Automatic Transmission) 2-30
Shifting Out of Park (P) (Automatic Transmission) 2-32
Parking Your Vehicle (Manual Transmission) 2-33
Parking Over Things That Burn 2-33
Engine Exhaust 2-34
Running Your Engine While You Are Parked 2-34
Mirrors 2-36
Manual Rearview Mirror 2-36
Manual Rearview Mirror with OnStar® 2-36
Automatic Dimming Rearview Mirror with Compass and Temperature Display 2-37
Outside Manual Mirrors 2-39
Outside Power Mirrors 2-40
Outside Convex Mirror 2-40
OnStar® System 2-41
Storage Areas 2-42
Glove Box 2-42
Cupholder(s) 2-42
Front Armrest Storage Area 2-43
Assist Handles 2-43
Rear Storage Area 2-43
Bed Rails 2-43

Keys

⚠ CAUTION:

Leaving children in a vehicle with the ignition key is dangerous for many reasons. They could operate the power windows or other controls or even make the vehicle move. The children or others could be badly injured or even killed. Do not leave the keys in a vehicle with children.

There is one double-sided key for the ignition, driver's door lock, and tailgate.

When a new vehicle is delivered, the dealer provides the owner with a pair of identical keys and a key code number.

The key code number tells your dealer or a qualified locksmith how to make extra keys. Keep this number in a safe place. If you lose your keys, you will be able to have new ones made easily using this number. Your dealer should also have this number.

Notice: **If you ever lock your keys in your vehicle, you may have to damage the vehicle to get in. Be sure you have spare keys.**

If you ever do get locked out of your vehicle call the GM Roadside Assistance Center. See *Roadside Assistance Program on page 7-6*.

If your vehicle is equipped with the OnStar system with an active subscription and you lock your keys inside the vehicle, OnStar may be able to send a command to unlock your vehicle. See *OnStar® System on page 2-41* for more information.

Remote Keyless Entry System

If equipped, the keyless entry system operates on a radio frequency subject to Federal Communications Commission (FCC) Rules and with Industry Canada.

This device complies with Part 15 of the FCC Rules. Operation is subject to the following two conditions:

1. This device may not cause interference, and
2. This device must accept any interference received, including interference that may cause undesired operation of the device.

This device complies with RSS-210 of Industry Canada. Operation is subject to the following two conditions:

1. This device may not cause interference, and
2. This device must accept any interference received, including interference that may cause undesired operation of the device.

Changes or modifications to this system by other than an authorized service facility could void authorization to use this equipment.

At times you may notice a decrease in range. This is normal for any remote keyless entry system. If the transmitter does not work or if you have to stand closer to your vehicle for the transmitter to work, try this:

- Check the distance. You may be too far from your vehicle. You may need to stand closer during rainy or snowy weather.
- Check the location. Other vehicles or objects may be blocking the signal. Take a few steps to the left or right, hold the transmitter higher, and try again.
- Check to determine if battery replacement is necessary. See “Battery Replacement” under *Remote Keyless Entry System Operation on page 2-5*.
- If you are still having trouble, see your dealer or a qualified technician for service.

Remote Keyless Entry System Operation

With this system you can lock and unlock your doors from about 3 feet (1 m) up to 30 feet (9 m) away using the remote keyless entry transmitter supplied with your vehicle.

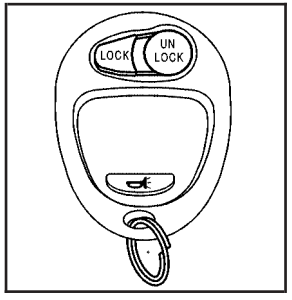

UNLOCK: Press this button to unlock the driver's door and turn on the interior lights. The parking lamps may also flash, and the horn may chirp, when this button is pressed.

Press the unlock button again within three seconds and all of the doors will unlock.

LOCK: Press this button to lock all the doors. The parking lamps may also flash and the horn may chirp when this button is pressed. Press the button again within three seconds and the horn may chirp.

You can program different feedback modes through the Driver Information Center (DIC). To program the modes, press and hold both the unlock and lock buttons for three approximately three seconds and the DIC will display the active mode. Then press and hold the trip odometer reset stem for approximately 2 seconds to select the modes. For more information see *DIC Controls and Displays on page 3-37*.

(Panic): Press this button to make the horn sound and the headlamps and taillamps flash for up to 30 seconds. To turn them off again, do one of these three things: wait for 30 seconds; press the panic button again; or start the vehicle.

Matching Transmitter(s) to Your Vehicle

Each remote keyless entry transmitter is coded to prevent another transmitter from unlocking your vehicle. If a transmitter is lost or stolen, a replacement can be purchased through your dealer. Remember to bring any remaining transmitters with you when you go to your dealer. When the dealer matches the replacement transmitter to your vehicle, any remaining transmitters must also be matched. Once your dealer has coded the new transmitter, the lost transmitter will not unlock your vehicle. Each vehicle can have a maximum of four transmitters matched to it.

Battery Replacement

Under normal use, the battery in your remote keyless entry transmitter should last about two years.

You can tell the battery is weak if the transmitter will not work at the normal range in any location. If you have to get close to your vehicle before the transmitter works, it is probably time to change the battery.

Notice: **When replacing the battery, use care not to touch any of the circuitry. Static from your body transferred to these surfaces may damage the transmitter.**

To replace the battery, do the following:

1. Insert a thin coin, or similar object, in the slot between the covers of the transmitter housing. Gently pry the transmitter apart.
2. Remove and replace the battery with a three-volt CR2032 or equivalent battery.
3. Align the covers and snap them together.
4. Check the operation of the transmitter.

Doors and Locks

Door Locks

⚠ CAUTION:

Unlocked doors can be dangerous.

- **Passengers — especially children — can easily open the doors and fall out of a moving vehicle. When a door is locked, the handle will not open it. You increase the chance of being thrown out of the vehicle in a crash if the doors are not locked. So, wear safety belts properly and lock the doors whenever you drive.**
- **Young children who get into unlocked vehicles may be unable to get out. A child can be overcome by extreme heat and can suffer permanent injuries or even death from heat stroke. Always lock your vehicle whenever you leave it.**
- **Outsiders can easily enter through an unlocked door when you slow down or stop your vehicle. Locking your doors can help prevent this from happening.**

There are several ways to lock and unlock your vehicle.

To unlock the door from the outside, use the key or the remote keyless entry transmitter (if equipped).

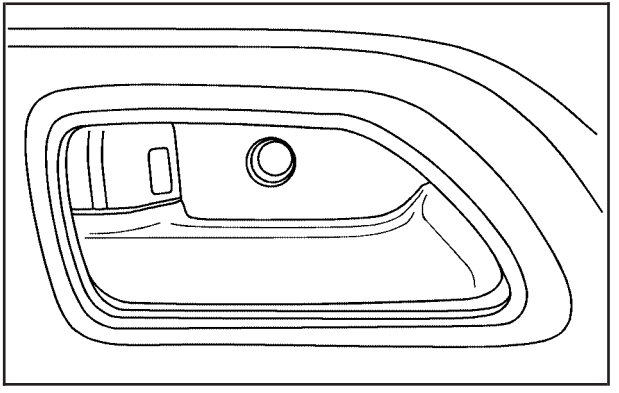

To lock a door from the inside, rotate the manual lever on your door forward. To unlock a door from the inside, rotate the lever on the door rearward.

You will see a colored area on the lever when the door is unlocked.

Power Door Locks

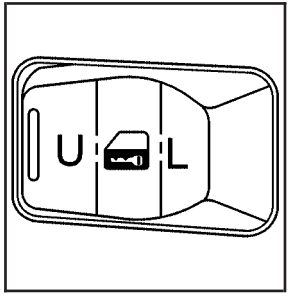

If your vehicle has power door locks, the switches are located on the driver's and the front passenger's armrests.

Remove the ignition key and press L (lock) to lock all the doors at once. To unlock all the doors, press U (Unlock).

On crew cab models, use the manual door lock lever on each rear door to lock or unlock the doors from the rear seating area.

Programmable Automatic Door Locks

If your vehicle has power door locks and the remote keyless entry system, it will be equipped with an auto lock/unlock feature which enables you to program your vehicle's power door locks from the driver's seating position.

If your vehicle has an automatic transmission it will be programmed to have all the doors lock automatically when the shift lever is moved out of PARK (P). All the doors will unlock when the shift lever is moved back into PARK (P).

If your vehicle has a manual transmission, it will be programmed to have all the doors lock when the vehicle speed is greater than 15 mph (24 km/h). The doors will unlock when the key is removed from the ignition.

To personalize the automatic door locks, see "Automatic Door Locks" under *DIC Controls and Displays on page 3-37*.

Rear Door Security Locks (Crew Cab)

If you have the crew cab model, your vehicle may be equipped with rear door security locks. With this feature, you can lock the rear doors so they cannot be opened from the inside by passengers.

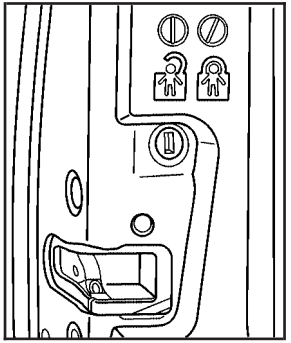

The security lock lever is located on the inside edge of each rear door.

To use the security locks, do the following:

1. Open one of the rear doors.
2. Using your ignition key, turn the lock clockwise on the driver's side rear door, and counterclockwise on the passenger's side rear door to engage the rear door security lock.
3. Close the door.
4. Repeat these steps on the opposite rear door.

If you want to open the rear door when the security lock is on, unlock the door and open the door from the outside. To return the rear doors to normal use, disengage the locks by inserting the ignition key and turning the lock counterclockwise for the driver's side rear door, and clockwise for the passenger's side rear door.

Lockout Protection

If you have power door locks, this feature protects you from locking your key in the vehicle when the key is in the ignition and a door is open.

If the power door lock switch is pressed when a door is open and the key is in the ignition, all of the doors will lock and then the driver's door will unlock.

Leaving Your Vehicle

If you are leaving the vehicle, take your keys, open your door and set the locks from inside. Then get out and close the door.

Rear Doors (Extended Cab)

If you have an extended cab, your vehicle has rear doors for convenience in loading and unloading cargo.

To open a rear door, open the front door. Then, use the handle located on the front edge of the rear door panel to open it. You must close the rear door before closing the front door.

Tailgate

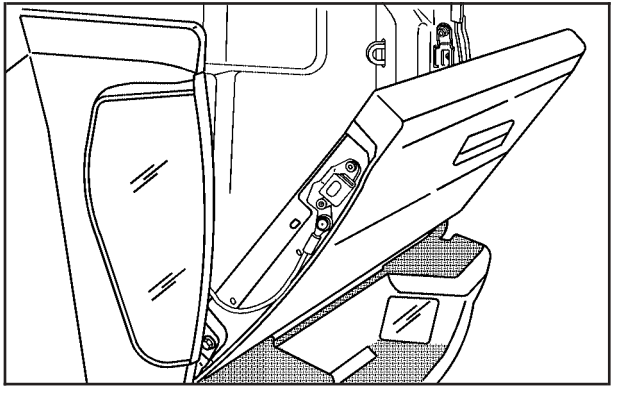

You can open the tailgate by pulling up on the handle while pulling the tailgate down.

When you put the tailgate back up, be sure it latches securely.

You can lock the tailgate using your ignition key. Turn the key counterclockwise to lock the tailgate. Turn the key clockwise to unlock the tailgate.

Removing the Tailgate

Follow these steps if you want to remove the tailgate:

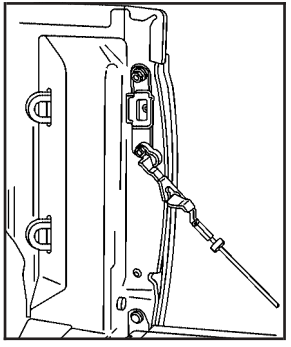

Tailgate Fully Down

1. Raise the tailgate slightly.
2. Remove the retaining cables from both ends of the tailgate by pulling upward on the clip. Then, push forward so the larger part of the hole on the bracket is over the bolt. Pull the end over the bolt.
3. With the tailgate halfway down, pull the tailgate toward you at the passenger's side and then move the tailgate to the right to release the passenger's side.

Reverse the procedure to reinstall the tailgate. Make sure it is secure.

To partially lower the tailgate do the following:

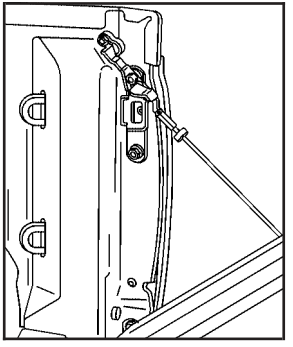

Tailgate Partially Down

1. Raise the tailgate slightly.
2. Pull upward on each clip. Then, push forward so the larger part of the hole on the bracket is over the bolt. Pull the end over the bolt.
3. Slide the end fitting off the bottom bolt and onto the top bolt.

If you would like to close the tailgate, the bracket cannot be in the partially open position and must be anchored on the bottom bolt, using the secondary position on the end fitting.

Windows

⚠ CAUTION:

Leaving children, helpless adults, or pets in a vehicle with the windows closed is dangerous. They can be overcome by the extreme heat and suffer permanent injuries or even death from heat stroke. Never leave a child, a helpless adult, or a pet alone in a vehicle, especially with the windows closed in warm or hot weather.

Manual Windows

On a vehicle with manual windows, use the handle on each door to open and close each window.

Power Windows

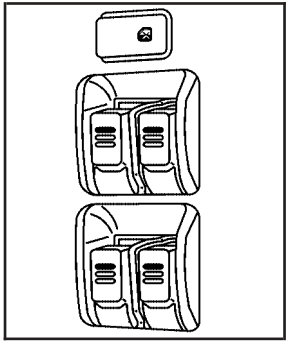

Crew cab switches shown

The power window controls are located on the armrest of each door.

The driver's door has switches for the passenger windows as well. Your power windows will work when the ignition has been turned to ACC (Accessory) or ON or when Retained Accessory Power (RAP) is active. See "Retained Accessory Power" under *Ignition Positions on page 2-17*.

Pull up the forward edge of the control with the power window symbol on it to raise the window.

Press the forward edge of the control down to lower the window.

Do not hold all four power window switches down for several seconds after the windows have been completely lowered or raised, because the vehicle may blow a fuse.

Express Down Windows

The driver's window also has an express down feature that allows the windows to be lowered without holding the switch. Press and hold the front edge of the window switch for one second to activate the express down mode. The express down mode can be canceled at any time by pulling up on the switch. To open the window partway, lightly tap the switch until the window is at the desired position.

Window Lockout

If you have a crew cab vehicle with power windows, you will also have a window lockout button located above the window switches. This feature disables the rear windows switches when the window lockout button is pressed. To turn the lockout feature on or off, press the window lockout button. When the feature is off, the power windows will operate normally.

Sliding Rear Window

If your vehicle has this feature, squeeze the latch in the center of the window and slide the glass to open it.

When you close the window, be sure the latch is engaged.

Sun Visors

To block glare, pull the visor down. It can also be detached from the center mount and moved to the side to block glare from that direction.

Visor Vanity Mirror

The passenger's side sun visor has a mirror on it. Pull down the visor to access the mirror.

Theft-Deterrent Systems

Vehicle theft is big business, especially in some cities. Although your vehicle has a number of theft-deterrent features, we know that nothing we put on it can make it impossible to steal. However, there are ways you can help.

Content Theft-Deterrent

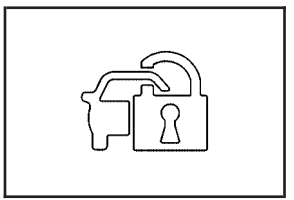

If your vehicle has the remote keyless entry system, the vehicle has a content theft-deterrent alarm system.

To activate the content theft-deterrent system, do the following:

1. Close all the doors.
2. Lock the door with the remote keyless entry transmitter. The security light flashes.

If the vehicle is equipped with OnStar®, and OnStar® locks the doors, with all the doors closed, it will activate the system.

If the lock button on the remote keyless entry transmitter is pressed, but a door is open, the horn will chirp six times. Close the open door and the system will be activated.

If a locked door is not opened with the remote keyless entry transmitter, or OnStar®, the alarm will go off. The front turn signal lamps will flash for two minutes, and the horn will sound for two minutes, then will turn off to save the battery power.

Remember, the theft-deterrent system won't activate if you lock the doors with a key, the manual door lock, or power door lock switch. The system can only be activated with the remote keyless entry transmitter, or OnStar®. You should also remember that you can start your vehicle with the correct ignition key if the alarm has been set off.

Here's how to avoid setting off the alarm by accident:

- If you don't want to activate the theft-deterrent system, the vehicle should be locked with the door key after the doors are closed.
- Always unlock a door with a the remote keyless entry transmitter. Unlocking a door any other way will set off the alarm.

If you set off the alarm by accident, you can turn off the alarm by pressing unlock on the remote keyless entry transmitter. The alarm won't stop if you try to unlock a door any other way.

Testing the Alarm

The alarm can be tested by following these steps:

1. From inside the vehicle, activate the system by locking the doors with the remote keyless entry transmitter.
2. Unlock the door with the manual door lock and open the door. This should set off the alarm.
3. To turn the alarm off, press the unlock button on the remote keyless entry transmitter or start the engine.

If the alarm does not sound when it should but the lights flash, check to see if the horn works. The horn fuse may be blown. To replace the fuse, see *Fuses and Circuit Breakers on page 5-104*.

If the alarm does not sound or the headlamps do not flash, see your dealer for service.

Passlock®

Your vehicle is equipped with the Passlock® theft-deterrent system.

Passlock® is a passive theft-deterrent system. Passlock® enables fuel if the ignition lock cylinder is turned with a valid key. If a correct key is not used or the ignition lock cylinder is tampered with, the fuel system is disabled and the vehicle will not start.

During normal operation, the security light will turn off approximately five seconds after the key is turned to RUN. See *Security Light on page 3-35*.

If the engine stalls and the security light flashes, wait about 10 minutes until the light stops flashing before trying to restart the engine. Remember to release the key from START as soon as the engine starts.

If the engine does not start after three tries, the vehicle needs service.

If the engine is running and the security light comes on, you will be able to restart the engine if you turn the engine off. However, your Passlock® system is not working properly and must be serviced by your dealer. Your vehicle is not protected by Passlock® at this time. You may also want to check the fuse see *Fuses and Circuit Breakers on page 5-104*. See your dealer for service.

In an emergency, call the GM Roadside Assistance Center. See *Roadside Assistance Program on page 7-6*.

Starting and Operating Your Vehicle

New Vehicle Break-In

Notice: **Your vehicle does not need an elaborate "break-in." But it will perform better in the long run if you follow these guidelines:**

- **Keep your speed at 55 mph (88 km/h) or less for the first 500 miles (805 km).**
- **Do not drive at any one speed — fast or slow — for the first 500 miles (805 km). Do not make full-throttle starts.**
- **Avoid making hard stops for the first 200 miles (322 km) or so. During this time your new brake linings are not yet broken in. Hard stops with new linings can mean premature wear and earlier replacement. Follow this breaking-in guideline every time you get new brake linings.**
- **Do not tow a trailer during break-in. See *Towing a Trailer on page 4-60* for more information.**

Ignition Positions

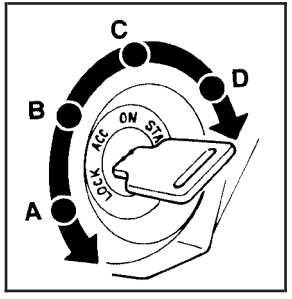

With the key in the ignition switch, you can turn to four different positions.

⚠ CAUTION:

On manual transmission vehicles, turning the key to LOCK will lock the steering column and result in a loss of ability to steer the vehicle. This could cause a collision. If you need to turn the engine off while the vehicle is moving, turn the key only to ACC. Do not push the key in while the vehicle is moving.

LOCK (A): This position locks your steering wheel, ignition and transmission on automatic transmission vehicles. If your vehicle has a manual transmission, this position locks your steering wheel. It is a theft-deterrent feature. You will only be able to remove your key when the ignition is turned to LOCK.

If you have an automatic transmission, the ignition switch cannot be turned to LOCK unless the shift lever is in PARK (P).

Notice: **Using a tool to force the key from the ignition switch could cause damage or break the key. Use the correct key and turn the key only with your hand. Make sure the key is all the way in. If it is, turn the steering wheel left and right while you turn the key hard. If none of this works, then your vehicle needs service.**

ACC (ACCESSORY) (B): This is the position in which you can operate your electrical accessories or items plugged into the accessory power outlets. It also unlocks the steering wheel and ignition. Use this position if your vehicle must be pushed or towed.

ON (C): This is the position that the switch returns to after you start your engine and release the switch. The switch stays in ON when the engine is running. But even when the engine is not running, you can use ON to operate your electrical accessories and to display some instrument panel cluster warning and indicator lights.

START (D): This is the position that starts the engine. When the engine starts, release the key. The ignition switch will return to ON for normal driving.

When the engine is not running, ACC and ON allow you to operate your electrical accessories, such as the radio or items plugged into the accessory power outlets.

A warning tone will sound if you open the driver's door when the ignition is in ACC or LOCK and the key is in the ignition.

Retained Accessory Power (RAP)

Your vehicle is equipped with Retained Accessory Power (RAP) which will allow certain features of your vehicle to continue working for up to 20 minutes after the ignition key is turned to LOCK.

Your radio and power windows will work when the ignition key is in ON or ACC. Once the key is turned from ON to OFF, these features will continue to work for up to 20 minutes or until a door is opened.

Starting Your Engine

Automatic Transmission

Move your shift lever to PARK (P) or NEUTRAL (N). Your engine will not start in any other position — that is a safety feature. To restart when you are already moving, use NEUTRAL (N) only.

Notice: **Do not try to shift to PARK (P) if your vehicle is moving. If you do, you could damage the transmission. Shift to PARK (P) only when your vehicle is stopped.**

Manual Transmission

The gear selector should be in NEUTRAL and the parking brake engaged. Hold the clutch pedal to the floor and start the engine. Your vehicle will not start if the clutch pedal is not all the way down — that is a safety feature.

Starting Your Engine

1. With your foot off the accelerator pedal, turn the ignition key to START. When the engine starts, let go of the key. The idle speed will go down as your engine gets warm.

Notice: **Holding your key in START for longer than 15 seconds at a time will cause your battery to be drained much sooner. And the excessive heat can damage your starter motor. Wait about 15 seconds between each try to help avoid draining your battery or damaging your starter.**

2. If the engine does not start within 10 seconds, push the accelerator pedal all the way to the floor, while you hold the ignition key in START. When the engine starts, let go of the key and let up on the accelerator pedal. Wait about 15 seconds between each try.

Depending on the outside temperature, the engine starter may continue cranking the engine up to approximately four seconds after you release the ignition key. This is normal.

When starting your engine in very cold weather (below 0°F or 18°C), do this:

1. With your foot off the accelerator pedal, turn the ignition key to START and hold it there up to 15 seconds. When the engine starts, let go of the key.
2. If your engine still will not start (or starts but then stops), it could be flooded with too much gasoline. Try pushing your accelerator pedal all the way to the floor and holding it there as you hold the key in START for about three seconds. When the engine starts, let go of the key and accelerator. If the vehicle starts briefly but then stops again, do the same thing, but this time keep the pedal down for five or six seconds. This clears the extra gasoline from the engine.

Notice: **Your engine is designed to work with the electronics in your vehicle. If you add electrical parts or accessories, you could change the way the engine operates. Before adding electrical equipment, check with your dealer. If you do not, your engine might not perform properly.**

Engine Coolant Heater

Your vehicle may be equipped with this feature.

In very cold weather, 0°F (–18°C) or colder, the engine coolant heater can help. You'll get easier starting and better fuel economy during engine warm-up. Usually, the coolant heater should be plugged in a minimum of four hours prior to starting your vehicle. At temperatures above 32°F (0°C), use of the coolant heater is not required.

To Use the Engine Coolant Heater

1. Turn off the engine.
2. Open the hood and unwrap the electrical cord. The cord is located in the engine compartment behind the underhood fuse block on the driver's side of the vehicle.
3. Plug it into a normal, grounded 110–volt AC outlet.

⚠ CAUTION:

Plugging the cord into an ungrounded outlet could cause an electrical shock. Also, the wrong kind of extension cord could overheat and cause a fire. You could be seriously injured. Plug the cord into a properly grounded three-prong 110-volt AC outlet. If the cord will not reach, use a heavy-duty three-prong extension cord rated for at least 15 amps.

4. Before starting the engine, be sure to unplug and store the cord as it was before to keep it away from moving engine parts. If you don't, it could be damaged.

How long should you keep the coolant heater plugged in? The answer depends on the outside temperature, the kind of oil you have, and some other things. Instead of trying to list everything here, we ask that you contact your dealer in the area where you'll be parking your vehicle. The dealer can give you the best advice for that particular area.

Automatic Transmission Operation

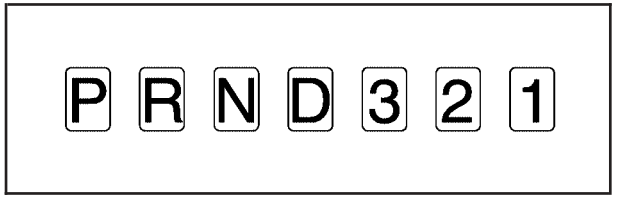

Your automatic transmission has a shift lever on the steering column.

It features an electronic shift position indicator within the instrument cluster. This display must be powered anytime the shift lever is capable of being moved out of PARK (P). This means that if your key is in OFF, but not locked, there will be a small current drain on your battery which could discharge your battery over a period of time. If you need to leave your key in the ignition in OFF for an extended period, it is recommended that you disconnect the battery cable from the battery to prevent discharging your battery.

There are several different positions for your shift lever.

PARK (P): This position locks your rear wheels. It is the best position to use when you start your engine because your vehicle cannot move easily.

⚠ CAUTION:

It is dangerous to get out of your vehicle if the shift lever is not fully in PARK (P) with the parking brake firmly set. Your vehicle can roll.

Do not leave your vehicle when the engine is running unless you have to. If you have left the engine running, the vehicle can move suddenly. You or others could be injured. To be sure your vehicle will not move, even when you are on fairly level ground, always set your parking brake and move the shift lever to PARK (P). See *Shifting Into Park (P) (Automatic Transmission) on page 2-30*. If you are pulling a trailer, see *Towing a Trailer on page 4-60*.

Make sure the shift lever is fully in PARK (P) before starting the engine. Your vehicle has an automatic transmission shift lock control system. You have to fully apply your regular brakes before you can shift from PARK (P) when the ignition key is in RUN.

If you cannot shift out of PARK (P), ease pressure on the shift lever by pushing the shift lever all the way into PARK (P) as you maintain brake application. Then move the shift lever into the gear you want. See *Shifting Out of Park (P) (Automatic Transmission) on page 2-32*.

REVERSE (R): Use this gear to back up.

Notice: **Shifting to REVERSE (R) while your vehicle is moving forward could damage the transmission. The repairs would not be covered by your warranty. Shift to REVERSE (R) only after your vehicle is stopped.**

To rock your vehicle back and forth to get out of snow, ice or sand without damaging your transmission, *see If You Are Stuck: In Sand, Mud, Ice or Snow on page 4-44*.

⚠ CAUTION:

If you have four-wheel drive, your vehicle will be free to roll — even if your shift lever is in PARK (P) — if your transfer case is in NEUTRAL. So, be sure the transfer case is in a drive gear, two-wheel high (2H) or four-wheel high (4H) or four-wheel low (4L) — not in NEUTRAL.
See *Shifting Into Park (P) on page 2-30.*

NEUTRAL (N): In this position, your engine does not connect with the wheels. To restart when you are already moving, use NEUTRAL (N) only.

⚠ CAUTION:

Shifting into a drive gear while your engine is running at high speed is dangerous. Unless your foot is firmly on the brake pedal, your vehicle could move very rapidly. You could lose control and hit people or objects. Do not shift into a drive gear while your engine is running at high speed.

Notice: **Shifting out of PARK (P) or NEUTRAL (N) with the engine running at high speed may damage the transmission. The repairs would not be covered by your warranty. Be sure the engine is not running at high speed when shifting your vehicle.**

DRIVE (D): This position is for normal driving. If you need more power for passing, and you are:

- Going less than about 35 mph (55 km/h), push your accelerator pedal about halfway down.
- Going about 35 mph (55 km/h) or more, push the accelerator all the way down.

You will shift down to the next gear and have more power.

DRIVE (D) should not be used when towing a trailer, carrying a heavy load, driving on steep hills, or for off-road driving. Select THIRD (3) when operating the vehicle under any of these conditions.

THIRD (3): This position is also used for normal driving. However, it offers more power and lower fuel economy than DRIVE (D). You should use THIRD (3) when towing a trailer, carrying a heavy load, driving on steep hills or winding roads or for off-road driving.

SECOND (2): This position gives you more power but lower fuel economy than THIRD (3). You can use SECOND (2) on hills. It can help control your speed as you go down steep mountain roads, but then you would also want to use your brakes off and on. You can also use SECOND (2) for starting your vehicle from a stop on slippery road surfaces.

FIRST (1): This position gives you even more power but lower fuel economy than SECOND (2). You can use it on very steep hills, or in deep snow or mud. If the shift lever is put in FIRST (1) while the vehicle is moving forward, the transmission will not shift into FIRST (1) until the vehicle is going slowly enough.

Notice: **Spinning the tires or holding the vehicle in one place on a hill using only the accelerator pedal may damage the transmission. If you are stuck, do not spin the tires. When stopping on a hill, use the brakes to hold the vehicle in place.**

Manual Transmission Operation

Five-Speed

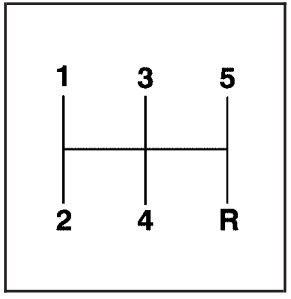

This is your shift pattern.

Here is how to operate your manual transmission:

FIRST (1): Press the clutch pedal and shift into FIRST (1). Then, slowly let up on the clutch pedal as you slowly press down on the accelerator pedal.

You can shift into FIRST (1) when you are going less than 20 mph (30 km/h). If you have come to a complete stop and it is hard to shift into FIRST (1), put the shift lever in NEUTRAL and let up on the clutch. Then press the clutch pedal back down and shift into FIRST (1).

SECOND (2): Press the clutch pedal as you let up on the accelerator pedal and shift into SECOND (2). Then, slowly let up on the clutch pedal as you press the accelerator pedal.

THIRD, FOURTH AND FIFTH (3, 4 and 5): Shift into THIRD (3), FOURTH (4) and FIFTH (5) the same way you do for SECOND (2). Slowly let up on the clutch pedal as you press the accelerator pedal.

To stop, let up on the accelerator pedal and press the brake pedal. Just before the vehicle stops, press the clutch pedal and the brake pedal, and shift to NEUTRAL.

NEUTRAL: Use this position when you start or idle your engine.

REVERSE (R): To back up, press the clutch pedal. After the vehicle stops, shift into REVERSE (R). Slowly let up on the clutch pedal as you press the accelerator pedal. If it is hard to shift, let the shift lever return to NEUTRAL and release the clutch pedal. Then press the clutch again and shift into REVERSE (R). Do not attempt to shift into the fift h gear position prior to shifting into REVERSE (R). Your transmission has a lock out feature which prevents a fifth gear to reverse gear shift.

Notice: **Shifting to REVERSE (R) while your vehicle is moving forward could damage the transmission. The repairs would not be covered by your warranty. Shift to REVERSE (R) only after your vehicle is stopped.**

Use REVERSE (R), along with the parking brake, for parking your vehicle.

Up-Shift Light

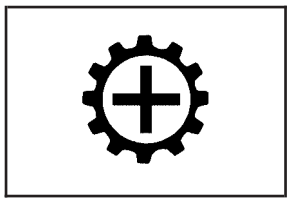

This light will show you when to shift to the next higher gear for best fuel economy.

When this light comes on, you can shift to the next higher gear if weather, road and traffic conditions permit. For the best fuel economy, accelerate slowly and shift when the light comes on.

While you accelerate, it is normal for the light to go on and off if you quickly change the position of the accelerator. Ignore the shift light when you downshift.

If your vehicle has four-wheel drive and is equipped with a manual transmission, disregard the shift light when the transfer case is in 4LO.

For more information, see *Up-Shift Light (Manual Transmission) on page 3-28*.

Shift Speeds

⚠ CAUTION:

If you skip a gear when you downshift, you could lose control of your vehicle. You could injure yourself or others. Don't shift down more than one gear at a time when you downshift.

Four-Wheel Drive

If your vehicle has four-wheel drive, you can send your engine's driving power to all four wheels for extra traction. To get the most satisfaction out of four-wheel drive, you must be familiar with its operation. Read the part that follows before using four-wheel drive. You should use two-wheel-drive high (2HI) for most normal driving conditions.

Notice: **Driving on pavement in four-wheel drive for an extended period of time may cause premature wear on your vehicle's powertrain. Do not drive in four-wheel drive on pavement for extended periods of time.**

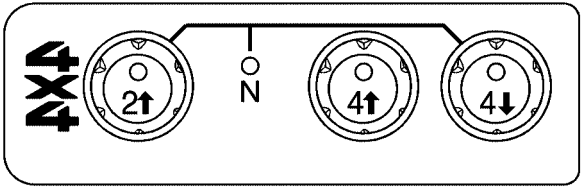

The transfer case buttons are located to the right of the steering wheel on the instrument panel.

Use these buttons to shift into and out of four-wheel drive. You can choose from the following:

2↑ (2HI): This setting is for driving in most street and highway situations. Your front axle is not engaged in two-wheel drive.

N (Neutral): Shift the vehicle's transfer case to NEUTRAL only when towing your vehicle.

⚠ CAUTION:

Shifting the transfer case to NEUTRAL can cause your vehicle to roll even if the transmission is in PARK (P). You or someone else could be seriously injured. Be sure to set the parking brake before placing the transfer case in NEUTRAL. See *Parking Brake on page 2-29*.

4↑ (4HI): This setting engages your front axle to help drive your vehicle. Use 4HI when you need extra traction, such as on snowy or icy roads, or in most off-road situations.

4↓ (4LO): This setting also engages your front axle to give you extra traction. It sends the maximum power to all four wheels. You might choose 4LO if you were driving off-road in sand, mud or deep snow and climbing or descending steep hills.

Indicator lights in the buttons show you which setting you are in. The indicator lights will come on briefly when you turn on the ignition and one will stay on. If the lights do not come on, you should take your vehicle in for service. An indicator light will flash while shifting. It will remain illuminated when the shift is completed.

If for some reason the transfer case cannot make a requested shift, it will return to the last chosen setting.

Shifting from 2HI to 4HI

Press and release the 4HI button. This can be done at any speed, and the front axle will lock automatically.

Shifting from 4HI to 2HI

Press and release the 2HI button. This can be done at any speed, and the front axle will unlock automatically.

Shifting from 2HI or 4HI to 4LO

To shift from 2HI or 4HI to 4LO, the vehicle must be stopped or moving less than 1.2 mph (2 km/h) with the transmission in NEUTRAL (N) in vehicles equipped with an automatic transmission or the clutch pedal engaged in vehicles equipped with a manual transmission. The preferred method for shifting into 4LO is to have your vehicle moving 1.2 mph (2 km/h). Press and release the 4LO button. You must wait for the 4LO indicator light to stop flashing and remain illuminated before shifting your transmission into gear or releasing the clutch pedal.

If the 4LO button is pressed when your vehicle is in gear and/or moving, the 4LO indicator light will flash for 30 seconds and not complete the shift.

On automatic transmission equipped vehicles, if your transfer case does not shift into 4LO, your transmission indicator switch may require adjustment. With your transmission in NEUTRAL (N), press and release the 4LO button. While the 4LO indicator light is flashing, shift your transmission into PARK (P). Press 4LO again. Wait until the 4LO indicator light remains illuminated before shifting your transmission into gear. Press the 4LO button again to complete the shift. This will get you into 4LO, but you should take your vehicle in for service to restore normal operation.

Shifting from 4LO to 2HI or 4HI

To shift from 4LO to 2HI or 4HI, your vehicle must be stopped or moving less than 1.2 mph (2 km/h) with the transmission in NEUTRAL (N) or the clutch pedal engaged. The preferred method for shifting out of 4LO is to have your vehicle moving 1.2 mph (2 km/h). Press and release the 4HI button. You must wait for the 4HI indicator light to stop flashing and remain illuminated before shifting your transmission into gear or releasing the clutch pedal.

If the 4HI button is pressed when your vehicle is in gear and/or moving, the 4HI indicator light will flash for 30 seconds but not complete the shift.

On vehicles with an automatic transmission, if your transfer case does not shift into 4HI, your transmission indicator switch may require adjustment. With your transmission in NEUTRAL (N), press and release the 4HI button. While the 4HI indicator light is flashing, shift your transmission into PARK (P). Wait until the 4HI indicator light remains illuminated before shifting your transmission into gear. Press the 4HI button again to complete the shift. This will get you into 4HI, but you should take your vehicle in for service to restore normal operation.

Shifting to NEUTRAL

Use NEUTRAL when you plan to tow your vehicle. See *Recreational Vehicle Towing on page 4-47* for towing instructions. To shift the transfer case into NEUTRAL, set the parking brake, then press and hold the 2HI and the 4LO buttons at the same time for 10 seconds.

Shifting out of NEUTRAL

After towing your vehicle, you will have to shift out of NEUTRAL in order to drive. To shift out of NEUTRAL, do the following:

1. Set the parking brake and apply the regular brake pedal. See *Parking Brake on page 2-29* for more information.
2. Start a vehicle with an automatic transmission in PARK (P). Use FIRST (1) for vehicles with a manual transmission.
3. Put an automatic transmission in NEUTRAL (N) or press the clutch pedal for vehicles with a manual transmission.
4. Press the button for the desired transfer case position (2HI, 4HI or 4LO).
5. Shift the transmission to the desired gear. After the transfer case has shifted out of NEUTRAL, the indicator light will go out.

   A re-engagement sound is normal when shifting out of NEUTRAL.

Parking Brake

The parking brake pedal is located to the left of the regular brake pedal, near the driver's door.

To set the parking brake, hold the regular brake pedal down with your right foot. Push down the parking brake pedal with your left foot.

A chime will activate and the warning light will flash when the parking brake is applied and the vehicle is moving at least 3 mph (5 km/h) for at least three seconds. The chime will deactivate and the light will turn off when the parking brake is set and the vehicle is moving below 3 mph (5 km/h). See *Brake System Warning Light on page 3-28*.

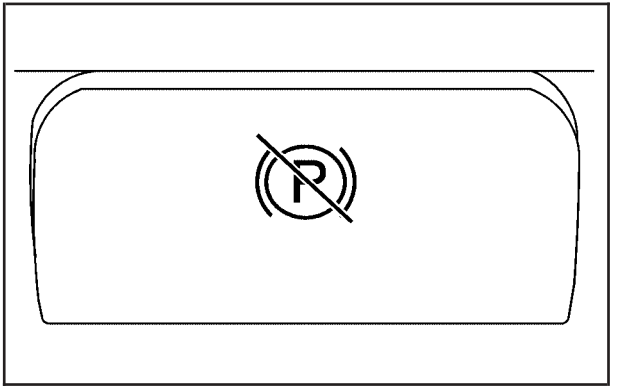

To release the parking brake, hold the regular brake pedal down. Pull the bottom edge of the lever, located above the parking brake pedal, with the parking brake symbol, to release the parking brake.

If the ignition is on when the parking brake is released, the brake system warning light will go off.

Notice: **Driving with the parking brake on can overheat the brake system and cause premature wear or damage to brake system parts. Verify that the parking brake is fully released and the brake warning light is off before driving.**

If you are towing a trailer and are parking on any hill, see *Towing a Trailer on page 4-60*.

Shifting Into Park (P) (Automatic Transmission)

⚠ CAUTION:

It can be dangerous to get out of your vehicle if the shift lever is not fully in PARK (P) with the parking brake firmly set. Your vehicle can roll. If you have left the engine running, the vehicle can move suddenly. You or others could be injured. To be sure your vehicle will not move, even when you are on fairly level ground, use the steps that follow. If you are pulling a trailer, see *Towing a Trailer on page 4-60*.

1. Hold the brake pedal down with your right foot and set the parking brake.
2. Move the shift lever into PARK (P) position like this:

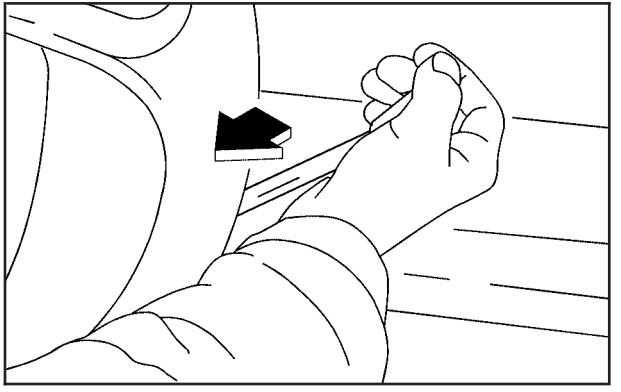

- Pull the lever toward you.

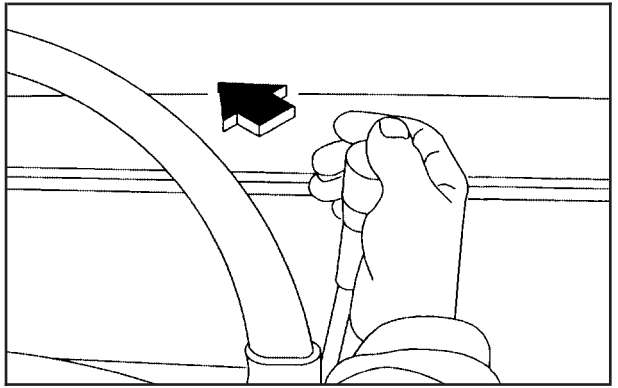

- Move the lever up as far as it will go.

3. Turn the ignition key to LOCK.
4. Remove the key and take it with you. If you can leave your vehicle with the key, your vehicle is in PARK (P).

Leaving Your Vehicle With the Engine Running

⚠ CAUTION:

It can be dangerous to leave your vehicle with the engine running. Your vehicle could move suddenly if the shift lever is not fully in PARK (P) with the parking brake firmly set. And, if you leave the vehicle with the engine running, it could overheat and even catch fire. You or others could be injured. Do not leave your vehicle with the engine running.

If you have to leave your vehicle with the engine running, be sure your vehicle is in PARK (P) and your parking brake is firmly set before you leave it. After you've moved the shift lever into PARK (P), hold the regular brake pedal down. Then, see if you can move the shift lever away from PARK (P) without first pulling it toward you. If you can, it means that the shift lever wasn't fully locked into PARK (P).

Torque Lock

If you are parking on a hill and you don't shift your transmission into PARK (P) properly, the weight of the vehicle may put too much force on the parking pawl in the transmission. You may find it difficult to pull the shift lever out of PARK (P). This is called "torque lock" To prevent torque lock, set the parking brake and then shift into PARK (P) properly before you leave the driver's seat. To find out how, see *Shifting Into Park (P) (Automatic Transmission) on page 2-30*.

When you are ready to drive, move the shift lever out of PARK (P) before you release the parking brake.

If torque lock does occur, you may need to have another vehicle push yours a little uphill to take some of the pressure from the parking pawl in the transmission, so you can pull the shift lever out of PARK (P).

Shifting Out of Park (P) (Automatic Transmission)

Your vehicle has an automatic transmission shift lock control system which locks the shift lever in PARK (P) when the ignition is in the LOCK position. In addition, you have to fully apply the regular brakes before you can shift from PARK (P) when the ignition is in ON. See *Automatic Transmission Operation on page 2-21*.

If you cannot shift out of PARK (P), ease pressure on the shift lever by pushing the shift lever all the way into PARK (P) as you maintain brake application. Then, press the shift lever button and move the shift lever into the gear you want.

If you ever hold the brake pedal down but still cannot shift out of PARK (P), try this:

1. Turn the key to ACC (Accessory). (There is no shift interlock in this key position.)
2. Apply and hold the brake until the end of Step 4.
3. Shift the transmission to NEUTRAL (N).
4. Start the vehicle and then shift to the gear you want.
5. Have the system fixed as soon as you can.

Parking Your Vehicle (Manual Transmission)

Your vehicle has a manual transmission. Before you get out of your vehicle, move the shift lever into REVERSE (R), and firmly apply the parking brake. Once the shift lever has been placed into REVERSE (R) with the clutch pedal pressed in, you can turn the ignition key to LOCK, remove the key and release the clutch.

If you are parking on a hill, or if your vehicle is pulling a trailer, see *Towing a Trailer on page 4-60*.

Parking Over Things That Burn

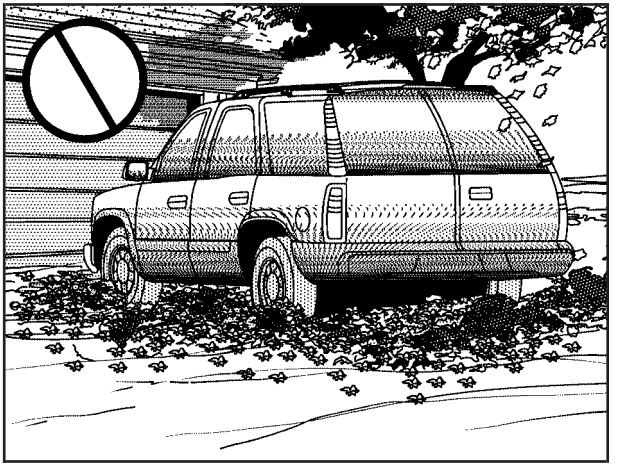

⚠ CAUTION:

Things that can burn could touch hot exhaust parts under your vehicle and ignite. Do not park over papers, leaves, dry grass or other things that can burn.

Engine Exhaust

⚠ CAUTION:

Engine exhaust can kill. It contains the gas carbon monoxide (CO), which you can not see or smell. It can cause unconsciousness and death.

You might have exhaust coming in if:

- **Your exhaust system sounds strange or different.**
- **Your vehicle gets rusty underneath.**
- **Your vehicle was damaged in a collision.**
- **Your vehicle was damaged when driving over high points on the road or over road debris.**
- **Repairs were not done correctly.**
- **Your vehicle or exhaust system had been modified improperly.**

If you ever suspect exhaust is coming into your vehicle:

- **Drive it only with all the windows down to blow out any CO; and**
- **Have your vehicle fixed immediately.**

Running Your Engine While You Are Parked

It is better not to park with the engine running. But if you ever have to, here are some things to know.

⚠ CAUTION:

Idling the engine with the climate control system off could allow dangerous exhaust into your vehicle. See the earlier Caution under *Engine Exhaust on page 2-34*.

Also, idling in a closed-in place can let deadly carbon monoxide (CO) into your vehicle even if the climate control fan is at the highest setting. One place this can happen is a garage. Exhaust — with CO — can come in easily. NEVER park in a garage with the engine running.

Another closed-in place can be a blizzard. See *Winter Driving on page 4-40*.

⚠ CAUTION:

It can be dangerous to get out of your vehicle if the shift lever is not fully in PARK (P) with the parking brake firmly set. Your vehicle can roll. Do not leave your vehicle when the engine is running unless you have to. If you have left the engine running, the vehicle can move suddenly. You or others could be injured.
To be sure your vehicle will not move, even when you are on fairly level ground, always set your parking brake and move the shift lever to PARK (P).

⚠ CAUTION:

If you have four-wheel drive, your vehicle will be free to roll — even if your shift lever is in PARK (P) — if your transfer case is in NEUTRAL. So be sure the transfer case is in a drive gear — not in NEUTRAL. See *Four-Wheel Drive on page 2-26*.

Follow the proper steps to be sure your vehicle will not move. See *Shifting Into Park (P) (Automatic Transmission) on page 2-30*.

If you are pulling a trailer, see *Towing a Trailer on page 4-60*.

Mirrors

Manual Rearview Mirror

You can adjust the mirror for day or night driving. Press the tab forward (away from you) for day driving. Pull the tab back (toward you) for night driving.

The mirror may have lamps. To manually turn the lamps on or off, press the button next to each lamp.

Manual Rearview Mirror with OnStar®

Your vehicle may have a manual rearview mirror with the OnStar® System and map lamps.

Mirror Operation

You can adjust the mirror for day or night driving. Press the tab forward (away from you) for day driving. Pull the tab back (toward you) for night driving.

There are also three OnStar® buttons located at the bottom of the mirror. See your dealer for more information on the system and how to subscribe to OnStar®. See *OnStar® System on page 2-41* for more information about the services OnStar® provides.

Map Lamps

The mirror has map lamps located at the bottom of the mirror. To manually turn the lamps on or off, press the button next to each lamp.

Cleaning the Mirror

When cleaning the mirror, use a paper towel or similar material dampened with glass cleaner. Do not spray glass cleaner directly on the mirror housing.

Automatic Dimming Rearview Mirror with Compass and Temperature Display

Your vehicle may have an automatic dimming rearview mirror with a compass, temperature display, and map lamps.

Mirror Operation

The mirror automatically changes to reduce glare from headlamps behind you. A time delay feature prevents rapid changing from the day to night positions while driving under lights and through traffic.

⏻ **(On/Off):** The automatic dimming feature is automatically activated when the vehicle is started. The automatic dimming feature is turned on or off by pressing this button located on the lower part of the mirror. Press and hold the button for up to three seconds to turn this feature on or off.

(Indicator Light): This light will turn on when the automatic dimming feature is active.

Map Lamps

The mirror has map lamps located at the bottom of the mirror. To manually turn the lamps on or off, press the button next to each lamp.

Compass Operation

The mirror has an eight-point compass display in the upper right corner of the mirror face. When on, the compass automatically calibrates as the vehicle is driven.

When the ignition and the compass feature are on, the compass will show two character boxes for approximately two seconds. After two seconds, the mirror will display the current compass heading. For example, NE is displayed for north-east.

Compass Calibration

If after two seconds the display does not show a compass heading, there may be a strong magnetic field interfering with the compass. Such interference may be caused by a magnetic antenna mount, note pad holder or similar object. If the letter C appears in the compass window, the compass needs calibration.

The mirror compass can be calibrated by driving the vehicle in circles at 5 mph (8 km/h) or less until the display reads a direction.

The compass can be placed in calibration mode by pressing and holding the on/off button until a C appears on the compass display.

Compass Variance

Compass variance is the difference between earth's magnetic north and true geographic north. If the mirror is not adjusted for compass variance, your compass could give false readings.

The mirror is set in zone eight upon leaving the factory. It will be necessary to adjust the compass to compensate for compass variance if you live outside zone eight. Under certain circumstances, such as a long distance, cross-country trip, it will be necessary to adjust the compass variance.

To adjust for compass variance, do the following:

1. Find your current location and variance zone number on the zone map that follows.

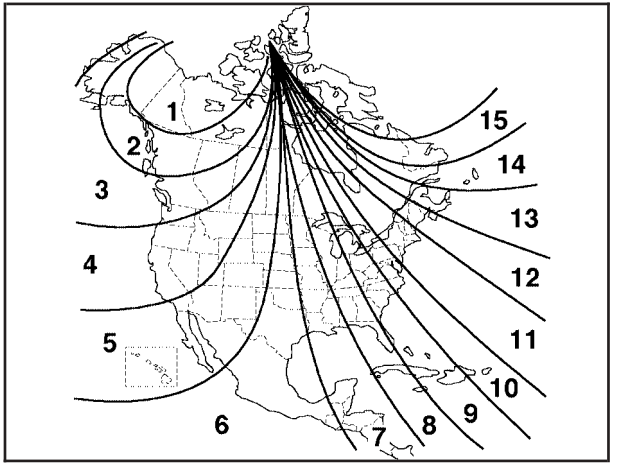

2. Press and hold the on/off button until a zone number appears on the display.
3. Once the zone number appears on the display, press the on/off button quickly until you reach the correct zone number. Stop pressing the button and the mirror will return to normal operation. If C appears in the compass window, the compass may need calibration. See "Compass Calibration" listed previously.

Temperature Display Operation

The outside air temperature is displayed in the window located at the lower center of the mirror face.

Press and hold the far right button for four seconds and release. This will change the temperature reading between degrees Fahrenheit, degrees Celsius, or turn the display off.

Cleaning the Mirror

When cleaning the mirror, use a paper towel or similar material dampened with glass cleaner. Do not spray glass cleaner directly on the mirror as that may cause the liquid cleaner to enter the mirror housing.

Outside Manual Mirrors

Adjust these mirrors by hand so that you can just see the side of your vehicle when you are sitting in a comfortable driving position.

The mirrors can be folded inward to prevent damage when going through an automatic car wash. To fold, push the mirror toward the vehicle. To return the mirror to its original position, push outward. Be sure to return both mirrors to the unfolded position before driving.

Outside Power Mirrors

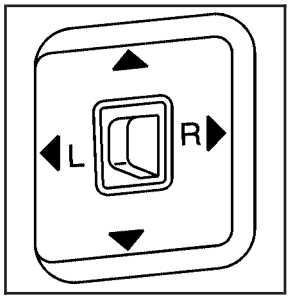

If your vehicle has this feature, the controls are located on the driver's door armrest.

To adjust the power mirrors, do the following:

1. Move the selector switch to the L (left) or R (right) to choose the driver's or passenger's mirror.
2. Use the arrows located on the four-way control pad to move the mirror in the direction you want the mirror to go.
3. Return the selector switch to the center position once the mirrors are adjusted.

If the mirror begins making a ratcheting sound, the mirror has reached the end of its travel and can go no farther in that direction. To stop the sound, reverse the mirror direction using the control pad.

The mirrors can be manually folded inward to prevent damage when going through an automatic car wash. To fold, push the mirror toward the vehicle. To return the mirror to its original position, push outward. Be sure to return both mirrors to the unfolded position before driving.

Outside Convex Mirror

Your passenger's outside rearview mirror is convex. A convex mirror's surface is curved so you can see more from the driver's seat.

⚠ CAUTION:

A convex mirror can make things (like other vehicles) look farther away than they really are. If you cut too sharply into the right lane, you could hit a vehicle on your right. Check your inside mirror or glance over your shoulder before changing lanes.

OnStar® System

Your vehicle may have this feature. OnStar® uses global positioning system (GPS) satellite technology, wireless communications, and state of the art call centers to provide you with a wide range of safety, security, information and convenience services.

A complete OnStar® user's guide and the terms and conditions of the OnStar® Subscription Service Agreement are included in your OnStar®-equipped vehicle's glove box literature. For more information, visit www.onstar.com, contact OnStar® at 1-888-4-ONSTAR (1-888-466-7827), or press the blue OnStar® button to speak to an OnStar® advisor 24 hours a day, 7 days a week.

A completed Subscription Service Agreement is required prior to delivery of OnStar® services and prepaid calling minutes are also required for OnStar® Personal Calling and OnStar® Virtual Advisor use. Terms and conditions of the Subscription Service Agreement can be found at www.onstar.com.

OnStar® Services

One of the following plans is normally included for a specific duration with each vehicle equipped with OnStar®. You can upgrade or extend your OnStar® service plan to meet your needs.

Safe and Sound Plan

- Automatic Notification of Air Bag Deployment
- Emergency Services
- Roadside Assistance
- Stolen Vehicle Assistance
- AccidentAssist
- Remote Door Unlock
- Remote Diagnostics
- Online Concierge

Directions and Connections Plan

- All Safe and Sound Plan services
- Route Support
- RideAssist
- Information and Convenience Services

Luxury and Leisure Plan

- All Directions and Connections Plan services
- Personal Concierge

OnStar® Personal Calling

With OnStar® Personal Calling, you have a safer way to stay connected while driving. It's a hands-free wireless phone that's integrated into your vehicle. You can place calls nationwide using voice-activated dialing with no contracts and no additional roaming charges. To find out more about OnStar® Personal Calling, refer to the OnStar® owner's guide in your vehicle's glove box, or call OnStar® at 1-888-4-ONSTAR (1-888-466-7827).

OnStar® Virtual Advisor

With OnStar® Virtual Advisor you can listen to your favorite news, entertainment and information topics, such as traffic and weather reports. You are able to listen and reply to your e-mail through your vehicle's speakers.

Storage Areas

Glove Box

To open the glove box, pull on the lever.

Cupholder(s)

Front Cupholders

Your vehicle may have two cupholders located on the lower part of the front doors as well as two cupholders located at the front end of the console. Vehicles with bench seats may have cupholders attached to the front of the center seat.

Rear Cupholders

If your vehicle is an extended cab or crew cab model, your vehicle also has two rear cupholders. On crew cab models, the cupholders are located at the front end of the rear center seat cushion. On extended cab models, the rear seat cupholders are located on top of the rear center console.

Front Armrest Storage Area

Your vehicle may have a two-tiered center armrest storage area. Lift up on the upper tab located at the front of the armrest to release the latch. Lift the lid to the top storage area. A second tab is located below the top one and allows you to access the bottom storage area. Lift up on the lower tab to release the latch. Then, raise the lid of the lower storage area. The upper storage area will lift up with the lid of the lower storage area.

To close the storage area(s), lower the lid(s) until you feel the latch close.

Assist Handles

Your vehicle may have assist handles to be used when getting out of your vehicle. If your vehicle has assist handles, they may be located above the front passenger door if you have a regular cab, or above the front and rear passenger doors if you have an extended cab or crew cab.

If your vehicle is equipped with roof-mounted side impact air bags, there will be assist handles located above both the driver's and front passenger's doors.

Rear Storage Area

If your vehicle is an extended cab model, it may be equipped with storage compartments under the rear seats.

Bed Rails

⚠ CAUTION:

If your vehicle has bed rails, they are there for appearance only. If you try to tie down a load with them, or to secure things in your truck, not only can it damage the bed rails, but the load can loosen. This could cause injury to you or others. Secure loads by using the cargo tie-down loops, inside the truck bed area.

NOTES

Section 3 Instrument Panel

Instrument Panel Overview 3-2
Hazard Warning Flashers 3-4
Other Warning Devices 3-4
Horn 3-4
Tilt Wheel 3-5
Turn Signal/Multifunction Lever 3-5
Exterior Lamps 3-12
Interior Lamps 3-15
Accessory Power Outlets 3-16
Ashtrays and Cigarette Lighter 3-17

Climate Controls 3-18
Climate Control System 3-18
Outlet Adjustment 3-21

Warning Lights, Gages, and Indicators 3-22
Instrument Panel Cluster 3-23
Speedometer and Odometer 3-24
Trip Odometer 3-24
Tachometer 3-24
Safety Belt Reminder Light 3-24
Air Bag Readiness Light 3-25
Air Bag Off Light 3-26
Battery Warning Light 3-27
Up-Shift Light (Manual Transmission) 3-28
Brake System Warning Light 3-28
Anti-Lock Brake System Warning Light 3-29
Engine Coolant Temperature Gage 3-30
Malfunction Indicator Lamp 3-30
Oil Pressure Light 3-34
Security Light 3-35
Cruise Control Light 3-35
Highbeam On Light 3-35
Daytime Running Lamps Indicator Light 3-36
Fuel Gage 3-36

Driver Information Center (DIC) 3-37
DIC Controls and Displays 3-37
DIC Warnings and Messages 3-39

Audio System(s) 3-42
Setting the Time for Radios without Radio Data Systems (RDS) 3-43
Setting the Time for Radios with Radio Data Systems (RDS) 3-43
AM-FM Radio 3-44
Radio with CD 3-47
Radio with Six-Disc CD 3-56
Theft-Deterrent Feature (Non-RDS Radios) 3-67
Theft-Deterrent Feature (RDS Radios) 3-67
Radio Reception 3-68
Care of Your CDs 3-68
Care of Your CD Player 3-68
Fixed Mast Antenna 3-68
Chime Level Adjustment 3-68

Instrument Panel Overview

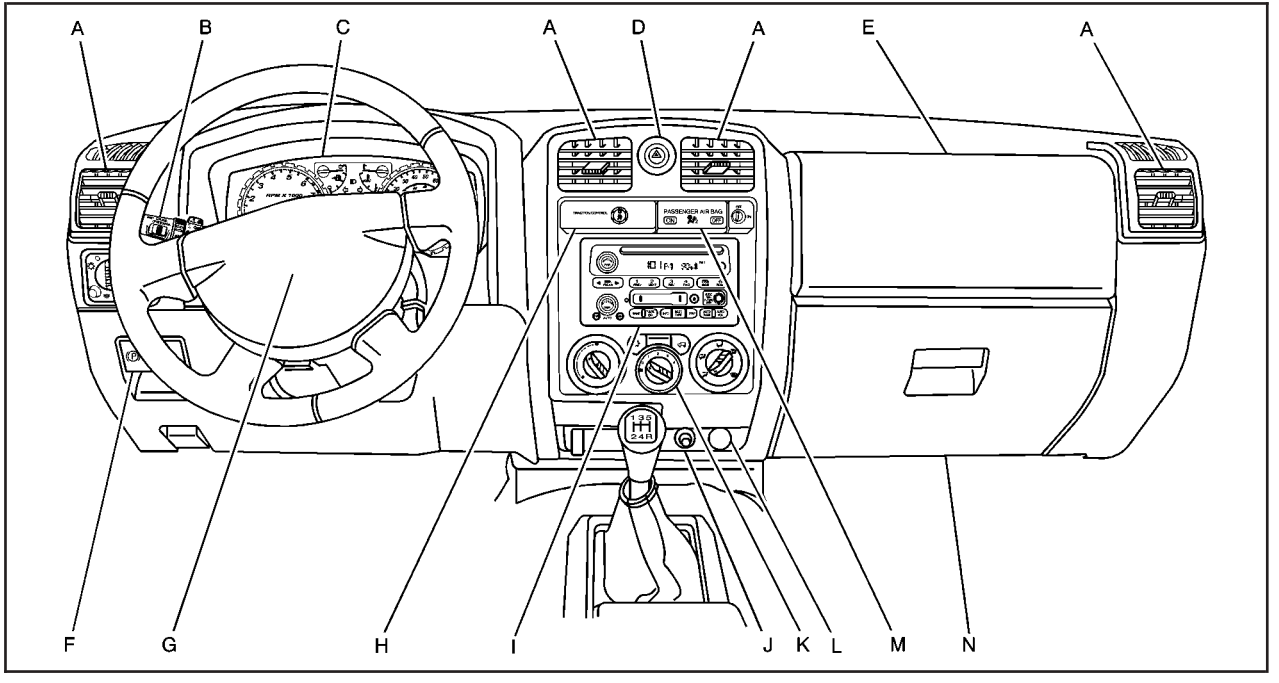

Manual transmission shown, automatic transmission similar

The main components of your vehicle's instrument panel are the following:

A. Air Outlets. See *Outlet Adjustment on page 3-21*.

B. Turn Signal/Multifunction Lever. See *Turn Signal/Multifunction Lever on page 3-5*.

C. Instrument Panel Cluster. See *Instrument Panel Cluster on page 3-23*.

D. Hazard Warning Flasher Button. See *Hazard Warning Flashers on page 3-4*.

E. Passenger Side Air Bag. See *Air Bag Systems on page 1-60*.

F. Park Brake Release. See *Parking Brake on page 2-29*.

G. Horn. See *Horn on page 3-4*.

H. Traction Control Button or Four-Wheel Drive Buttons. See *Traction Control System (TCS) on page 4-9* and *Four-Wheel Drive on page 2-26*.

I. Audio System. See *Audio System(s) on page 3-42*.

J. Cigarette Lighter (If Equipped). See *Ashtrays and Cigarette Lighter on page 3-17*.

K. Climate Control System. See *Climate Control System on page 3-18*.

L. Accessory Power Outlet. See *Accessory Power Outlets on page 3-16*.

M. Air Bag Off Switch (Regular cab and rear seat delete only). See "Air Bag Off Switch" under *Air Bag Systems on page 1-60*.

N. Glove Box. See *Glove Box on page 2-42*.

Hazard Warning Flashers

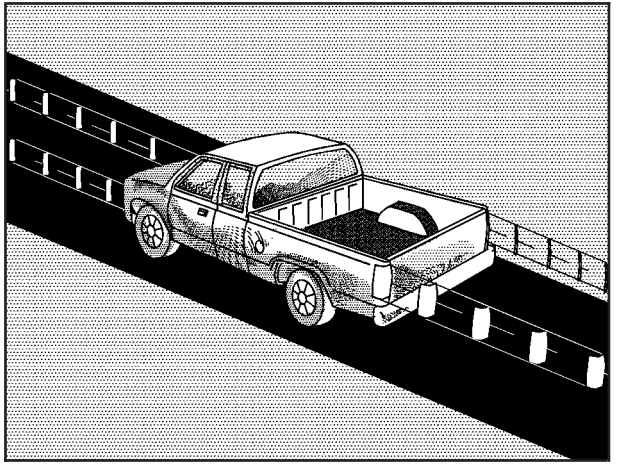

Your hazard warning flashers let you warn others. They also let police know you have a problem. Your front and rear turn signal lamps will flash on and off.

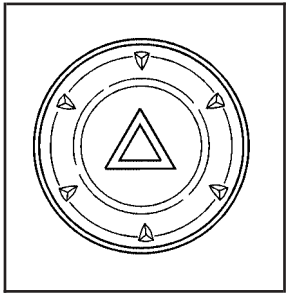

The hazard warning flasher button is located on the instrument panel, between the two air vents in the center.

Your hazard warning flashers work no matter what position your key is in, and even if the key isn't in.

Press the button to make the front and rear turn signal lamps flash on and off. Press the button again to turn the flashers off.

When the hazard warning flashers are on, your turn signals won't work.

Other Warning Devices

If you carry reflective triangles, you can set one up at the side of the road about 300 feet (100 m) behind your vehicle.

Horn

To sound the horn, press the horn symbol on the steering wheel pad.

Tilt Wheel

A tilt wheel allows you to adjust the steering wheel before you drive. If you have the tilt steering wheel, you can raise it to the highest level to allow more room for the driver to enter and exit the vehicle.

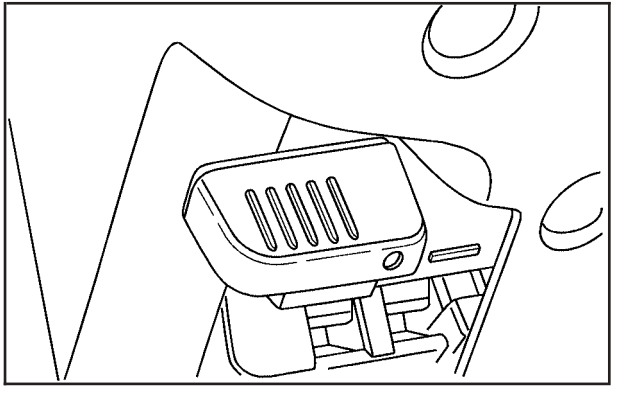

The tilt lever is located on the driver's side of the steering column, under the turn signal lever.

To tilt, hold the steering wheel and pull the tilt lever toward you. Move the wheel to a comfortable level, then release the tilt lever to lock the wheel in place.

Do not adjust the steering wheel while driving.

Turn Signal/Multifunction Lever

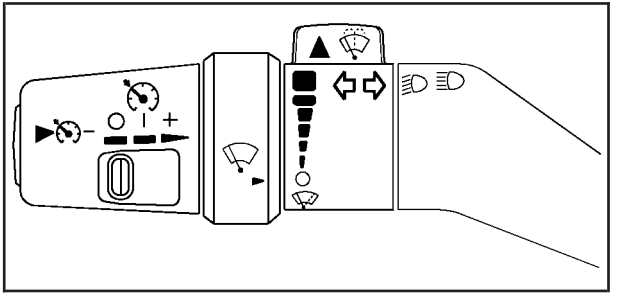

The lever on the left side of the steering column includes the following:

- Turn and Lane Change Signals
- Headlamp High/Low-Beam Changer
- Flash-to-Pass
- Windshield Wipers
- Windshield Washer
- Cruise Control

Turn and Lane Change Signals

The turn signal has two upward (for right) and two downward (for left) positions. These positions allow you to signal a turn or a lane change.

To signal a turn, move the lever all the way up or down. When the turn is finished, the lever will return automatically.

To signal a lane change, just raise or lower the lever until the arrow starts to flash. Hold it there until you complete your lane change. The lever will return by itself when you release it.

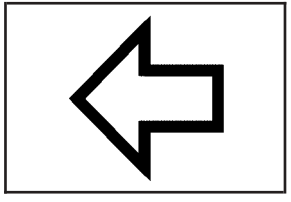

An arrow on the instrument panel cluster will flash in the direction of the turn or lane change.

As you signal a turn or a lane change, if the arrows flash more quickly than normal, a signal bulb may be burned out and other drivers won't see your turn signal.

If a bulb is burned out, replace it to help avoid an accident. If the arrows don't go on at all when you signal a turn, check for burned-out bulbs and a blown fuse. See *Fuses and Circuit Breakers on page 5-104*.

Turn Signal On Chime

If your turn signal is left on for more than 3/4 of a mile (1.2 km), a chime will sound at each flash of the turn signal and the message TURN SIGNAL will also appear in the DIC. To turn the chime and message off, move the turn signal lever to the off position.

See "TURN SIGNAL" under *DIC Warnings and Messages on page 3-39* for more information.

Headlamp High/Low-Beam Changer

(Headlamp High/Low Beam Changer):
To change the headlamps from low to high beam, push the lever toward the instrument panel. To return to low-beam headlamps, pull the multifunction lever toward you. Then release it.

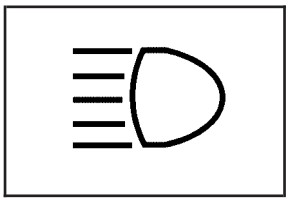

When the high beams are on, this indicator light on the instrument panel cluster will also be on.

Flash-to-Pass

This feature lets you use your high-beam headlamps to signal a driver in front of you that you want to pass. It works even if your headlamps are in the automatic position.

To use it, pull the turn signal lever toward you, then release it.

If your headlamps are in the automatic position or on low beam, your high-beam headlamps will turn on. They'll stay on as long as you hold the lever toward you. The high-beam indicator on the instrument panel cluster will come on. Release the lever to return to normal operation.

Windshield Wipers

You control the windshield wipers by turning the band with the wiper symbol on it.

(Mist): For a single wiping cycle, turn the band to mist. Hold it there until the wipers start. Then let go. The wipers will stop after one wipe. If you want more wipes, hold the band on mist longer.

(Delay): You can set the wiper speed for a long or short delay between wipes. This can be very useful in light rain or snow. Turn the band to choose the delay time. The closer to the top of the lever, the shorter the delay.

(Low Speed): For steady wiping at low speed, turn the band away from you to the first solid band past the delay settings.

(High Speed): For high-speed wiping, turn the band to the second solid band past the delay settings.

(Off): To stop the wipers, move the band to off.

Be sure to clear ice and snow from the wiper blades before using them. If they're frozen to the windshield, carefully loosen or thaw them. If your blades do become worn or damaged, get new blades or blade inserts.

Windshield Washer

⚠ CAUTION:

In freezing weather, do not use your washer until the windshield is warmed. Otherwise the washer fluid can form ice on the windshield, blocking your vision.

(Washer Fluid): There is a paddle marked with the windshield washer symbol at the top of the multifunction lever. To spray washer fluid on the windshield, push the paddle. The wipers will clear the window and then either stop or return to your preset speed.

Cruise Control

Your vehicle may be equipped with cruise control.

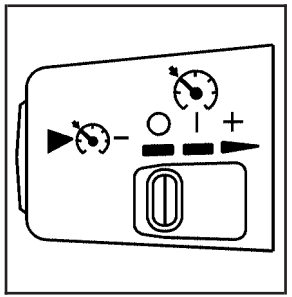

◯ **(Off):** This position turns the system off.

| **(On):** This position activates the system.

+ (Resume/Accelerate): Move the lever to this symbol to make the vehicle accelerate or resume to a previously set speed.

(Set): Press this button to set the speed.

With cruise control, you can maintain a speed of about 25 mph (40 km/h) or more without keeping your foot on the accelerator. This can really help on long trips. Cruise control does not work at speeds below about 25 mph (40 km/h).

Cruise control will not work if your parking brake is set, or if the master cylinder brake fluid level is low.

If you apply your brakes, the cruise control will shut off.

⚠ CAUTION:

Cruise control can be dangerous where you can not drive safely at a steady speed. So, do not use your cruise control on winding roads or in heavy traffic.

Cruise control can be dangerous on slippery roads. On such roads, fast changes in tire traction can cause needless wheel spinning, and you could lose control. Do not use cruise control on slippery roads.

If your vehicle is in cruise control when the traction control system (if equipped) begins to limit wheel spin, the cruise control will automatically disengage. See *Traction Control System (TCS) on page 4-9*. When road conditions allow you to safely use it again, you may turn cruise control back on.

Setting Cruise Control

⚠ CAUTION:

If you leave your cruise control on when you are not using cruise, you might hit a button and go into cruise when you do not want to. You could be startled and even lose control. Keep the cruise control switch off until you want to use cruise control.

1. Move the cruise control switch to on.
2. Get up to the speed you want.
3. Press in the set button at the end of the lever and release it.
4. Take your foot off the accelerator pedal.

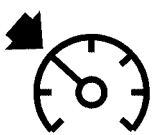

The cruise symbol on the instrument panel will illuminate when the cruise control is engaged.

Resuming a Set Speed

Suppose you set your cruise control at a desired speed and then you apply the brake. This, of course, disengages the cruise control. But you don't need to reset it.

Once you're going about 25 mph (40 km/h) or more, you can move the cruise control switch briefly from on to resume/accelerate.

You'll go right back up to your chosen speed and stay there.

If you hold the switch at resume/accelerate the vehicle will keep going faster until you release the switch or apply the brake. So unless you want to go faster, don't hold the switch at resume/accelerate.

Increasing Speed While Using Cruise Control

There are two ways to go to a higher speed:

- Use the accelerator pedal to get to the higher speed. Press the set button at the end of the lever, then release the button and the accelerator pedal. You'll now cruise at the higher speed. If the accelerator pedal is held longer than 60 seconds, cruise control will turn off.

- Move the cruise switch from on to resume/accelerate. Hold it there until you get up to the speed you want, and then release the switch. To increase your speed in very small amounts, move the switch briefly to resume/accelerate. Each time you do this, your vehicle will go about 1 mph (1.6 km/h) faster.

Reducing Speed While Using Cruise Control

- Press and hold the set button until you reach the lower speed you want, then release it.
- To slow down in very small amounts, briefly press the set button. Each time you do this, you'll go about 1 mph (1.6 km/h) slower.

Passing Another Vehicle While Using Cruise Control

Use the accelerator pedal to increase your speed. When you take your foot off the pedal, your vehicle will slow down to the cruise control speed you set earlier.

Using Cruise Control on Hills

How well your cruise control will work on hills depends upon your speed, load and the steepness of the hills. When going up steep hills, you may want to step on the accelerator pedal to maintain your speed. When going downhill, you may have to brake or shift to a lower gear to keep your speed down. Of course, applying the brake takes you out of cruise control. Many drivers find this to be too much trouble and don't use cruise control on steep hills.

Ending Cruise Control

There are two ways to turn off the cruise control:

- Step lightly on the brake pedal
- Move the cruise control switch to off

Erasing Speed Memory

When you turn off the cruise control or the ignition, your cruise control set speed memory is erased.

Exterior Lamps

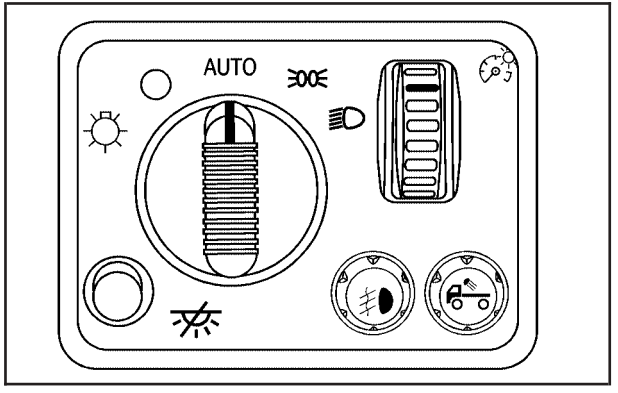

The control on the driver's side of your instrument panel operates the exterior lamps.

(Exterior Lamps): Turn the knob, located to the right of this symbol, to choose one of the four exterior lamp positions.

(Off): Turn the knob to this position to turn off all exterior lamps including the DRLs.

AUTO: Turn the knob to this position to automatically turn on the headlamps at normal brightness, together with the following:

- Sidemarker Lamps
- Taillamps
- Parking Lamps
- Instrument Panel Lights

See "Automatic Headlamp System" following, for more information.

(Parking Lamps): Turn the knob to this position to turn on the parking lamps, together with the following:

- Sidemarker Lamps
- Taillamps
- License Plate Lamps
- Instrument Panel Lights

(Headlamps): Turn the knob to this position to turn on the headlamps, together with the previously listed lamps and lights.

You can switch your headlamps from low to high beam by pushing the turn signal/multifunction lever toward the instrument panel.

Automatic Headlamp System

Your vehicle may be equipped with this feature. When it is dark enough outside, your automatic headlamp system will turn on your headlamps at the normal brightness along with other lamps such as the taillamps, sidemarker, parking lamps and the instrument panel lights. The radio lights may also be dim.

Your vehicle may have a light sensor located on the top of the instrument panel. Be sure it is not covered, or the system will be on whenever the ignition is on.

The system may also turn on your headlamps when driving through a parking garage, heavy overcast weather or a tunnel. This is normal.

There is a delay in the transition between the daytime and nighttime operation of the Daytime Running Lamps (DRL) and the automatic headlamp system so that driving under bridges or bright overhead street lights does not affect the system. The DRL and automatic headlamp system will only be affected when the light sensor sees a change in lighting lasting longer than the delay.

If you start your vehicle in a dark garage, the automatic headlamp system will come on immediately. Once you leave the garage, it will take approximately several seconds for the automatic headlamp system to change to DRL if it is light outside. During that delay, your instrument panel cluster may not be as bright as usual. Make sure your instrument panel brightness control is in the full bright position. See “Instrument Panel Brightness” under *Interior Lamps on page 3-15*.

Lamps On Reminder

If a door is open, a reminder chime will sound when your headlamps or parking lamps are manually turned on and your key is out of the ignition. To turn off the chime, turn the headlamp switch to off and then back on. In the automatic mode, the headlamps turn off once the ignition is in LOCK.

Daytime Running Lamps

Daytime Running Lamps (DRL) can make it easier for others to see the front of your vehicle during the day. DRL can be helpful in many different driving conditions, but they can be especially helpful in the short periods after dawn and before sunset. Fully functional daytime running lamps are required on all vehicles first sold in Canada.

The DRL system will come on when the following conditions are met:

- The ignition is on.
- The exterior lamps control is in AUTO.
- The automatic transmission is not in PARK (P).
- The light sensor determines it is daytime.

When the DRL are on, only your DRL lamps will be on. The taillamps, sidemarkers and other lamps will not be on. The instrument panel will not be lit up either.

When it begins to get dark, the automatic headlamp system will switch from DRL to the headlamps.

As with any vehicle, you should turn on the regular headlamp system when you need it.

Fog Lamps

If your vehicle has fog lamps you can use them for better vision in foggy or misty conditions. Your parking lamps and/or low-beam headlamps must be on for your fog lamps to work.

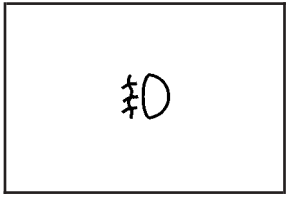

The fog lamp button is located near the exterior lamps control.

Press the button to turn the fog lamps on while the headlamps or parking lamps are on. Press the button again to turn them off. An indicator light will glow in the button when the fog lamps are on.

Remember, fog lamps alone will not give off as much light as your headlamps. Never use your fog lamps in the dark without turning on the headlamps.

The fog lamps will go off whenever your high-beam headlamps come on. When the high beams go off, the fog lamps will come on again.

The fog lamps will be cancelled after the ignition is turned off. If you still want to use the fog lamps after you restart the vehicle, you will need to press the fog lamp button again.

Cargo Lamps

If your vehicle is equipped with cargo lamps, you can use them if you need more light in the cargo area of your vehicle. The dome lamps must be on before you can turn on the cargo lamps.

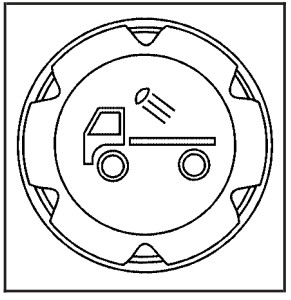

Press this button to turn the cargo lamps on and off.

Interior Lamps

Instrument Panel Brightness

The thumbwheel for this feature is located next to the exterior lamps control. See *Exterior Lamps on page 3-12*.

(Instrument Panel Lights): Turn the thumbwheel up or down to brighten or dim the instrument panel lights and the radio display. This will only work if the headlamps or parking lamps are on.

To turn on the dome lamp, with the vehicle doors closed, turn the thumbwheel all the way up.

Dome Lamp

The dome lamp will come on when you open a door.

You can also turn the dome lamp on by turning the thumbwheel all the way up. In this position, the dome lamp will remain on whether a door is opened or closed.

(Dome Override): Press this button, located below the exterior lamp control, to turn the dome lamp off even when a door is opened. To return the lamp to automatic operation, press the button again.

Exit Lighting

With exit lighting, the interior lamps will come on when you remove the key from the ignition. The lamps will not come on if the dome override button is pressed in.

Battery Run-Down Protection

This feature shuts off the dome lamp if it is left on for more than 20 minutes when the ignition is in LOCK. This will keep your battery from running down.

Accessory Power Outlets

Your vehicle may have an accessory power outlet.

With accessory power outlets you can plug in auxiliary electrical equipment such as a cellular telephone or CB radio.

Your vehicle may have two accessory power outlets located on the lower part of the instrument panel below the climate control system and there may be one located on the rear of the center console. A small cap must be pulled down to access an accessory power outlet. When not using an outlet be sure to cover it with the protective cap.

Notice: **Leaving electrical equipment on for extended periods will drain the battery. Always turn off electrical equipment when not in use and do not plug in equipment that exceeds the maximum amperage rating.**

Certain electrical accessories may not be compatible with the accessory power outlet and could result in blown vehicle or adapter fuses. If you experience a problem, see your dealer for additional information on accessory power outlets.

Notice: **Adding any electrical equipment to your vehicle may damage it or keep other components from working as they should. The repairs would not be covered by your warranty. Check with your dealer before adding electrical equipment.**

When adding electrical equipment, be sure to follow the proper installation instructions included with the equipment.

Notice: **Improper use of the power outlet can cause damage not covered by your warranty. Do not hang any type of accessory or accessory bracket from the plug because the power outlets are designed for accessory power plugs only.**

Ashtrays and Cigarette Lighter

Your vehicle may have an ashtray and cigarette lighter.

Your ashtray is located at the front of your center console area.

Notice: **If you put papers or other flammable items in the ashtray, hot cigarettes or other smoking materials could ignite them and possibly damage your vehicle. Never put flammable items in the ashtray.**

To use the lighter, press it in all the way, and let go. When it's ready, it will pop back out by itself.

Notice: **Holding a cigarette lighter in while it is heating will not allow the lighter to back away from the heating element when it is hot. Damage from overheating may occur to the lighter or heating element, or a fuse could be blown. Do not hold a cigarette lighter in while it is heating.**

Climate Controls

Climate Control System

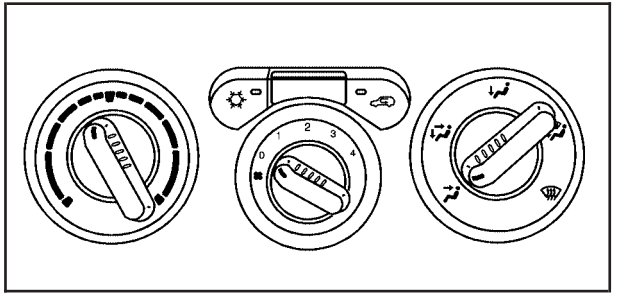

Uplevel climate controls shown, base similar

With this system you can control the heating, cooling, and ventilation for your vehicle.

Temperature Knob

The left knob on the control panel is used to adjust the temperature of the air in the vehicle. Turn the knob clockwise or counterclockwise to increase or decrease the temperature.

Fan Knob

(Fan): The center knob on the control panel is used to control the fan speed. Turn the knob clockwise or counterclockwise to increase or decrease the fan speed.

If the knob is set on “0” (zero), some outside air will still enter the vehicle and will be directed according to the position of the mode knob.

Mode Knob

The right knob on the control panel is used to direct the airflow inside your vehicle. Turn the knob to select one of the following modes:

(Vent): Select this mode to direct air to the instrument panel outlets.

(Bi-Level): Select this mode to direct approximately half of the air to the instrument panel outlets, and the remaining air to the floor outlets and the defroster and side window outlets. Cooler air is directed to the upper outlets and warmer air to the floor outlets.

(Floor): Select this mode to direct air to the floor outlets. Recirculation does not work in this mode.

Mode Buttons

(Recirculation): If your vehicle has air conditioning, you will have the recirculation feature. This mode recirculates air inside the cabin, and prevents outside air from coming in the vehicle. It can be used to prevent outside odors from entering your vehicle and cool the air inside your vehicle more quickly. Press this button to turn the recirculation mode on or off. An indicator light on the button will come on to let you know the recirculation mode is activated.

Recirculation is only available in the bi-level and vent modes. If you push the recirculation button while the system is in any other mode, the light on the button will flash to indicate that recirculation is not available.

(Air Conditioning): Your vehicle may have air conditioning. Press this button to turn the air-conditioning system on or off. An indicator light on the button will come on to let you know the air conditioning is activated. When the system is on, this setting cools and dehumidifies the air entering your vehicle.

The air conditioning will not function if the fan is turned off.

You may notice a slight change in engine performance when the air conditioning compressor shuts off and turns on again. This is normal. The system is designed to make adjustments to help with fuel economy while still maintaining the selected temperature.

The air conditioning system removes moisture from the air, so you may sometimes notice a small amount of water dripping underneath your vehicle while idling or after turning off the engine. This is normal.

Defogging and Defrosting

Fog on the inside of windows is a result of high humidity (moisture) condensing on the cool window glass. This can be minimized if the climate control system is used properly. There are two modes to clear fog or frost from your windshield and side windows. Use the defog mode to clear the windows of fog or moisture and warm the passengers. Use the defrost mode to remove fog or frost from the windshield more quickly. For best results, clear all snow and ice from the windshield before defrosting.

Turn the mode knob on the climate control panel clockwise to select the defog or defrost modes.

(Floor/Defog): This mode directs the air to the windshield, the side window outlets, and to the floor outlets. When you select this mode, the system runs the air conditioning compressor unless the outside temperature is near freezing or below. Recirculation is not available in this mode.

(Defrost): This mode directs most of the air to the windshield, and the side window outlets. When you select this mode, the system runs the air conditioning compressor unless the outside temperature is near, or below freezing. Recirculation is not available in this mode.

Do not drive the vehicle until all the windows are clear.

Outlet Adjustment

The flow-through outlets on your vehicle allow outside air to enter your vehicle while it is moving. Outside air will also enter your vehicle while the air conditioning compressor is running.

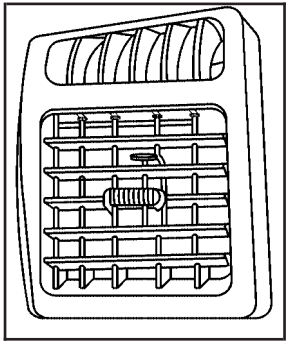

Use the thumbwheel on the outlets to change the direction of the air flow.

Lift up or push down on the thumbwheel located in the center of the outlet to direct the air up or down, or slide the thumbwheel to the left or right to direct the airflow from side-to-side.

Operation Tips

- Clear away any ice, snow or leaves from the air inlets at the base of the windshield that may block the flow of air into your vehicle.
- Use of non-GM approved hood deflectors may adversely affect the performance of the system.
- Keep the path under the front seats clear of objects to help circulate the air inside of your vehicle more effectively.

Warning Lights, Gages, and Indicators

This part describes the warning lights and gages that may be on your vehicle. The pictures will help you locate them.

Warning lights and gages can signal that something is wrong before it becomes serious enough to cause an expensive repair or replacement. Paying attention to your warning lights and gages could also save you or others from injury.

Warning lights come on when there may be or is a problem with one of your vehicle's functions. As you will see in the details on the next few pages, some warning lights come on briefly when you start the engine just to let you know they are working. If you are familiar with this section, you should not be alarmed when this happens.

Gages can indicate when there may be or is a problem with one of your vehicle's functions. Often gages and warning lights work together to let you know when there is a problem with your vehicle.

When one of the warning lights comes on and stays on when you are driving, or when one of the gages shows there may be a problem, check the section that tells you what to do about it. Please follow this manual's advice. Waiting to do repairs can be costly — and even dangerous. So please get to know your warning lights and gages. They are a big help.

Your vehicle may also have a DIC that works along with the warning lights and gages. See *Driver Information Center (DIC) on page 3-37* for more information.

Instrument Panel Cluster

Your instrument panel cluster is designed to let you know at a glance how your vehicle is running. You will know how fast you are going, about how much fuel you have used, and many other things you will need to know to drive safely and economically.

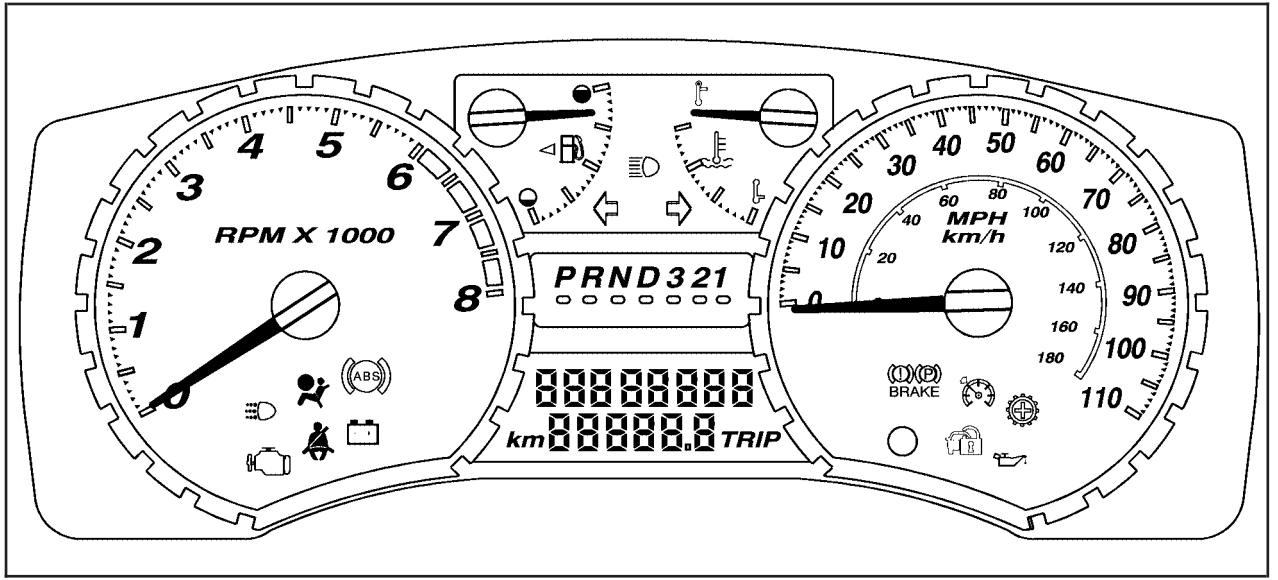

United States automatic transmission version shown, Canada similar

Speedometer and Odometer

Your speedometer lets you see your speed in both miles per hour (mph) and kilometers per hour (km/h).

Your odometer shows how far your vehicle has been driven, in either miles (used in the United States) or kilometers (used in Canada).

The odometer mileage can be checked without the vehicle running. Simply press the trip information stem. See “Odometer” under *DIC Controls and Displays on page 3-37* for more information.

You may wonder what happens if your vehicle needs a new odometer installed. If the new one can be set to the mileage total of the old odometer, then it must be. But if it cannot, then it is set at zero, and a label must be put on the driver’s door to show the old mileage reading when the new odometer was installed.

Trip Odometer

Your vehicle has a trip odometer that can tell you how far your vehicle has been driven since you last set the trip odometer to zero.

To view the trip odometer, press the trip odometer reset stem until TRIP is displayed. To reset the current trip odometer, hold the reset stem. See “Trip Odometer” under *DIC Controls and Displays on page 3-37* for more information.

Tachometer

The tachometer displays the engine speed in revolutions per minute (rpm).

Notice: **If you operate the engine with the tachometer in the shaded warning area, your vehicle could be damaged, and the damages would not be covered by your warranty. Do not operate the engine with the tachometer in the shaded warning area.**

Safety Belt Reminder Light

When the key is turned to ON or START, a chime will come on for several seconds to remind people to fasten their safety belts, unless the driver’s safety belt is already buckled.

The safety belt light will also come on and stay on for several seconds, then it will flash until the driver’s safety belt is buckled.

If the driver’s belt is already buckled, neither the chime nor the light will come on.

Air Bag Readiness Light

There is an air bag readiness light on the instrument panel, which shows the air bag symbol. The system checks the air bag's electrical system for malfunctions. The light tells you if there is an electrical problem. The system check includes the air bag sensors, the air bag modules, the wiring and the crash sensing and diagnostic module. For more information on the air bag systems, see *Air Bag Systems on page 1-60*.

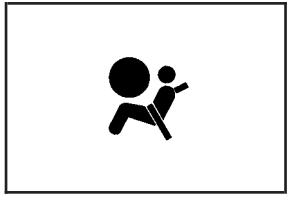

This light will come on when you start your vehicle, and it will flash for a few seconds. Then the light should go out. This means the system is ready.

If the air bag readiness light stays on after you start the vehicle or comes on when you are driving, your air bag system may not work properly. Have your vehicle serviced right away.

⚠ CAUTION:

If the air bag readiness light stays on after you start your vehicle, it means the air bag system may not be working properly. The air bags in your vehicle may not inflate in a crash, or they could even inflate without a crash. To help avoid injury to yourself or others, have your vehicle serviced right away if the air bag readiness light stays on after you start your vehicle.

The air bag readiness light should flash for a few seconds when you turn the ignition key to RUN. If the light doesn't come on then, have it fixed so it will be ready to warn you if there is a problem.

Air Bag Off Light

Regular Cab Models and Extended Cab Models without Rear Seats

When you turn the air bag off switch to the off position, the off indictor will come on and stay on to remind you that the air bag has been turned off. When you turn the air bag off switch to the auto position, the on indicator will come on. See *Air Bag Off Switch on page 1-70* for more on this, including important safety information.

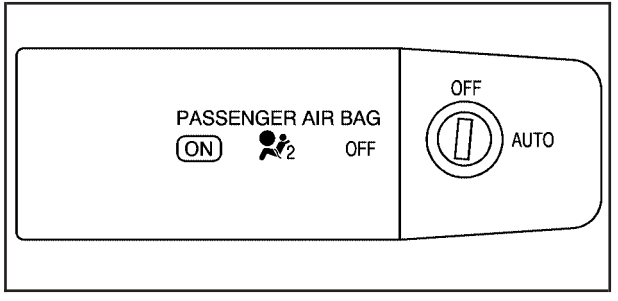

⚠ CAUTION:

If the right front passenger's frontal air bag is turned off for a person who is not in a risk group identified by the national government, that person will not have the extra protection of an air bag. In a crash, the frontal air bag would not be able to inflate and help protect the person sitting there.

Do not turn off the right front passenger's frontal air bag unless the person sitting there is in a risk group identified by the national government. See *Air Bag Off Switch on page 1-70* for more on this, including important safety information.

⚠ CAUTION:

If the air bag readiness light ever comes on when you have turned off the air bag, it means that something may be wrong with the air bag system. The right front passenger's frontal air bag could inflate even though the switch is off. If this ever happens, do not let anyone whom the national government has identified as a member of a passenger air bag risk group sit in the right front passenger's position (for example, do not secure a rear-facing child restraint in the right front passenger's seat) until you have your vehicle serviced.

Battery Warning Light

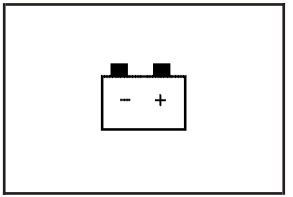

This light will come on briefly when you start the vehicle, as a check to show you it is working; then it should go out.

If it stays on, or comes on while you are driving, you may have a problem with the electrical charging system. Have it checked right away. Driving while this light is on could drain your battery and result in a vehicle that may stall.

If you must drive a short distance with the light on, be certain to turn off all your accessories, such as the radio and climate control system.

Up-Shift Light (Manual Transmission)

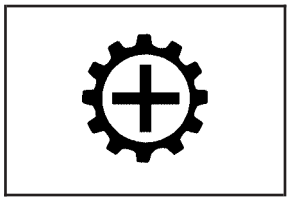

This light appears when you need to shift to the next higher gear on a manual transmission vehicle.

Shifting when the indicator light is on will help you get the best fuel economy. See “Up-Shift Light” under *Manual Transmission Operation on page 2-24* for more information.

Brake System Warning Light

Your vehicle’s hydraulic brake system is divided into two parts. If one part is not working, the other part can still work and stop you. For good braking, though, you need both parts working well.

If the warning light comes on, there could be a brake problem. Have your brake system inspected right away.

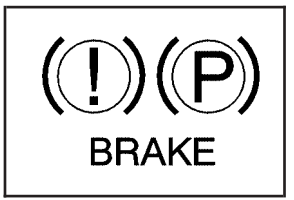

United States

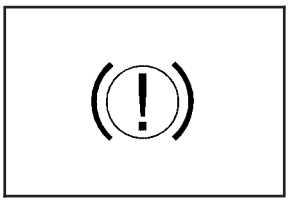

Canada

This light should come on briefly when you turn the ignition key to ON. If it does not come on then, have it fixed so it will be ready to warn you if there is a problem.

When the ignition is on, the brake system warning light will also come on when you set your parking brake. See *Parking Brake on page 2-29* for more information. The light will stay on if your parking brake does not release fully. If it stays on after your parking brake is fully released, it means you have a brake problem.

If the light comes on while you are driving, pull off the road and stop carefully. You may notice that the pedal is harder to push, or the pedal may go closer to the floor. It may take longer to stop. If the light is still on, have the vehicle towed for service. See *Towing Your Vehicle on page 4-47*.

⚠ CAUTION:

Your brake system may not be working properly if the brake system warning light is on. Driving with the brake system warning light on can lead to an accident. If the light is still on after you have pulled off the road and stopped carefully, have the vehicle towed for service.

Anti-Lock Brake System Warning Light

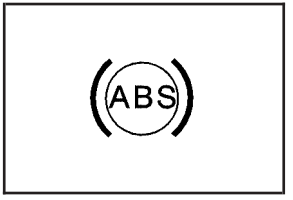

With the anti-lock brake system, this light will come on briefly when you start your engine to show it is working. Then it will turn off. This is normal.

If the light stays on, or comes on when you're driving, your vehicle needs service. If the regular brake system warning light isn't on, you still have brakes, but you don't have anti-lock brakes. If the regular brake system warning light is also on, you don't have anti-lock brakes and there's a problem with your regular brakes. See *Brake System Warning Light on page 3-28*.

The anti-lock brake system warning light should come on briefly when you turn the ignition key to ON. If the light doesn't come on then, have it fixed so it will be ready to warn you if there is a problem.

Engine Coolant Temperature Gage

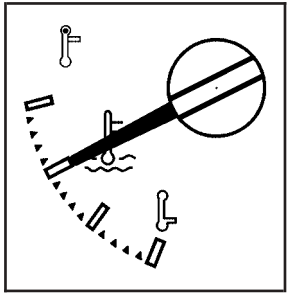

This gage shows the engine coolant temperature.

If the gage pointer is near the top of the gage, the engine is too hot. It means that your engine coolant has overheated. If you have been operating your vehicle under normal driving conditions, you should pull off the road, stop your vehicle and turn off the engine as soon as possible.

See *Engine Overheating on page 5-28* for more information.

Malfunction Indicator Lamp

Check Engine Light

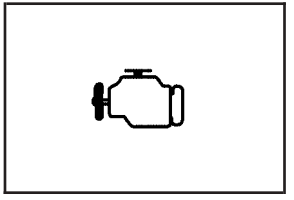

Your vehicle is equipped with a computer which monitors operation of the fuel, ignition and emission control systems.

This system is called OBD II (On-Board Diagnostics-Second Generation) and is intended to assure that emissions are at acceptable levels for the life of the vehicle, helping to produce a cleaner environment. The check engine light comes on to indicate that there is a problem and service is required. Malfunctions often will be indicated by the system before any problem is apparent. This may prevent more serious damage to your vehicle. This system is also designed to assist your service technician in correctly diagnosing any malfunction.

Notice: **If you keep driving your vehicle with this light on, after a while, your emission controls may not work as well, your fuel economy may not be as good and your engine may not run as smoothly. This could lead to costly repairs that may not be covered by your warranty.**

Notice: **Modifications made to the engine, transmission, exhaust, intake or fuel system of your vehicle or the replacement of the original tires with other than those of the same Tire Performance Criteria (TPC) can affect your vehicle's emission controls and may cause this light to come on. Modifications to these systems could lead to costly repairs not covered by your warranty. This may also result in a failure to pass a required Emission Inspection/Maintenance test.**

This light should come on, as a check to show you it is working, when the ignition is on and the engine is not running. If the light does not come on, have it repaired. This light will also come on during a malfunction in one of two ways:

- **Light Flashing** — A misfire condition has been detected. A misfire increases vehicle emissions and may damage the emission control system on your vehicle. Diagnosis and service may be required.
- **Light On Steady** — An emission control system malfunction has been detected on your vehicle. Diagnosis and service may be required.

If the Light is Flashing

The following may prevent more serious damage to your vehicle:

- Reducing vehicle speed.
- Avoiding hard accelerations.
- Avoiding steep uphill grades.
- If you are towing a trailer, reduce the amount of cargo being hauled as soon as it is possible.

If the light stops flashing and remains on steady, see “If the Light Is On Steady” following.

If the light continues to flash, when it is safe to do so, *stop the vehicle.* Find a safe place to park your vehicle. Turn the key off, wait at least 10 seconds and restart the engine. If the light remains on steady, see “If the Light Is On Steady” following. If the light is still flashing, follow the previous steps, and see your dealer for service as soon as possible.

If the Light Is On Steady

You may be able to correct the emission system malfunction by considering the following:

Did you recently put fuel into your vehicle?

If so, reinstall the fuel cap, making sure to fully install the cap. See *Filling Your Tank on page 5-7*. The diagnostic system can determine if the fuel cap has been left off or improperly installed. A loose or missing fuel cap will allow fuel to evaporate into the atmosphere. A few driving trips with the cap properly installed should turn the light off.

Did you just drive through a deep puddle of water?

If so, your electrical system may be wet. The condition will usually be corrected when the electrical system dries out. A few driving trips should turn the light off.

Have you recently changed brands of fuel?

If so, be sure to fuel your vehicle with quality fuel. See *Gasoline Octane on page 5-5*. Poor fuel quality will cause your engine not to run as efficiently as designed. You may notice this as stalling after start-up, stalling when you put the vehicle into gear, misfiring, hesitation on acceleration or stumbling on acceleration. (These conditions may go away once the engine is warmed up.) This will be detected by the system and cause the light to turn on.

If you experience one or more of these conditions, change the fuel brand you use. It will require at least one full tank of the proper fuel to turn the light off.

If none of the above steps have made the light turn off, your dealer can check the vehicle. Your dealer has the proper test equipment and diagnostic tools to fix any mechanical or electrical problems that may have developed.

Emissions Inspection and Maintenance Programs

Some state/provincial and local governments have or may begin programs to inspect the emission control equipment on your vehicle. Failure to pass this inspection could prevent you from getting a vehicle registration.

Here are some things you need to know to help your vehicle pass an inspection:

Your vehicle will not pass this inspection if the check engine light is on or not working properly.

Your vehicle will not pass this inspection if the OBD (on-board diagnostic) system determines that critical emission control systems have not been completely diagnosed by the system. The vehicle would be considered not ready for inspection. This can happen if you have recently replaced your battery or if your battery has run down. The diagnostic system is designed to evaluate critical emission control systems during normal driving. This may take several days of routine driving. If you have done this and your vehicle still does not pass the inspection for lack of OBD system readiness, your GM dealer can prepare the vehicle for inspection.

Oil Pressure Light

⚠ CAUTION:

Do not keep driving if the oil pressure is low. If you do, your engine can become so hot that it catches fire. You or others could be burned. Check your oil as soon as possible and have your vehicle serviced.

Notice: **Lack of proper engine oil maintenance may damage the engine. The repairs would not be covered by your warranty. Always follow the maintenance schedule in this manual for changing engine oil.**

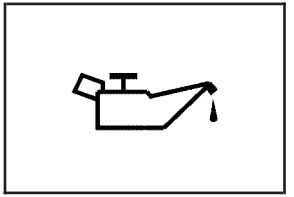

This light tells you if there could be a problem with your engine oil pressure.

The light goes on when you turn your key to ON or START. It goes off once you start your engine. That's a check to be sure the light works. If it doesn't come on, be sure to have it fixed so it will be there to warn you if something goes wrong.

When the light comes on and stays on, it means that oil isn't flowing through your engine properly. You could be low on oil and you might have some other system problem. See *Engine Oil on page 5-13* and "OIL" under *DIC Warnings and Messages on page 3-39* for more information.

Security Light

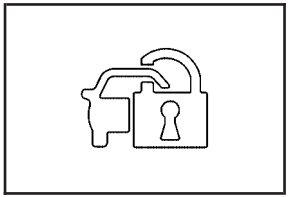

This light will come on briefly when you turn the key to START. The light will stay on until the engine starts.

If the ignition is turned on, and the light flashes, the Passlock® system has entered a tamper mode. If the vehicle fails to start, see *Passlock® on page 2-16*.

If the light comes on continuously while driving and stays on, there may be a problem with the Passlock® system. Your vehicle will not be protected by Passlock®, and you should see your dealer.

Also, see *Content Theft-Deterrent on page 2-14* for additional information regarding the security light.

Cruise Control Light

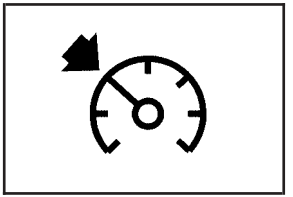

This symbol appears on your instrument panel whenever you set your cruise control. See “Cruise Control” under *Turn Signal/Multifunction Lever on page 3-5*.

Highbeam On Light

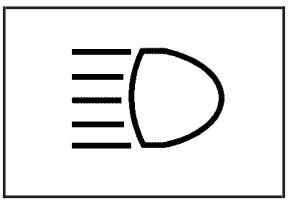

This light comes on whenever the high-beam headlamps are on.

Daytime Running Lamps Indicator Light

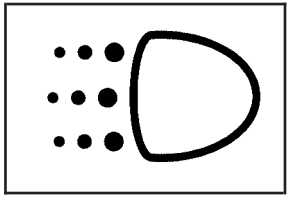

This light turns on whenever the Daytime Running Lamps are on.

See “Daytime Running Lamps (DRL)” under *Exterior Lamps on page 3-12* for more information.

Fuel Gage

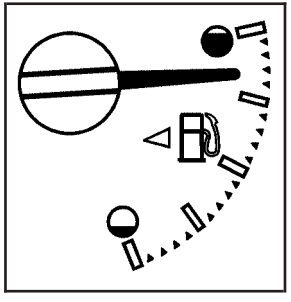

When the ignition is on, the fuel gage tells you about how much fuel you have remaining in the fuel tank.

Here are four things that some owners ask about. None of these indicate a problem with your fuel gage:

- At the gas station, the gas pump shuts off before the gage reads full.
- It takes a little more or less fuel to fill up than the gage indicated. For example, the gage may have indicated the tank was half full, but it actually took a little more or less than half the tank’s capacity to fill the tank.
- The gage moves a little when you turn a corner or speed up.
- The gage does not go back to empty when you turn off the ignition.

When the fuel in the fuel tank is low, you will see a LOW FUEL message on the Driver Information Center (DIC) display. See *DIC Warnings and Messages on page 3-39* for more information.

Driver Information Center (DIC)

The DIC display is located on the instrument panel cluster. The DIC can display information such as the trip odometer, and personalization features.

DIC Controls and Displays

The Driver Information Center (DIC) comes on when the ignition is on. After a short delay the DIC will display the current driver and the information that was last displayed before the engine was turned off.

If a problem is detected, a warning message will appear on the display. Pressing and releasing the trip odometer reset stem on the DIC will acknowledge any current warning or service messages.

The DIC has different modes which can be accessed by pressing the trip odometer reset stem on the DIC. These modes are explained following. The DIC trip odometer reset stem is located on the instrument panel cluster next to the DIC display. To scroll through the available functions, press and release the reset stem.

Trip Information

Odometer

The odometer is automatically displayed on the DIC when you start the vehicle. The odometer shows the total distance the vehicle has been driven in either miles or kilometers.

Trip Odometer

Press and release the reset stem until TRIP appears on the DIC display. This shows the current distance traveled since the last reset of the trip odometer in either miles or kilometers.

Press and hold the reset stem for approximately four seconds to reset the trip odometer.

GM Oil Life System™

Press the reset stem until OIL LIFE appears (flashing) on the display. The GM Oil Life System™ shows an estimate of the oil's remaining useful life. It will show 100% when the system is reset after an oil change. It will alert you to change your oil on a schedule consistent with your driving conditions.

Always reset the engine oil life after an oil change. To reset the oil life system press and hold the reset stem while OIL LIFE is displayed. The system will reset and a beep will sound.

The DIC does not replace the need to maintain your vehicle as recommended in the Maintenance Schedule in this manual. The oil change reminder will not detect dusty conditions or engine malfunctions that may affect the oil. Also, the oil change reminder does not measure how much oil you have in your engine. So, be sure to check your oil level often. See *Engine Oil on page 5-13* for more information.

Automatic Door Locks

With the vehicle's engine off, and the ignition in the LOCK position, press and hold the power door lock button for approximately 3 seconds until the DIC displays the current door lock mode. Then press the reset stem for approximately two seconds to switch modes. The following are the mode choices:

Mode 1 (default): Lock all doors when the vehicle is shifted out of PARK (P) with an automatic transmission, or when vehicle speed is greater than 15 mph (24km/h) with a manual transmission. Doors will unlock when the vehicle is shifted into PARK (P) with an automatic transmission, or when the ignition key is removed on a manual transmission.

Mode 2: Turns off the automatic door locks.

Mode 3: Lock all doors when the vehicle is shifted out of PARK (P) with an automatic transmission, or when vehicle speed is greater than 15 mph (24km/h) with a manual transmission. Driver's door will unlock when the vehicle is shifted into PARK (P) with an automatic transmission, or when the ignition key is removed on a manual transmission.

Mode 4: Lock all doors when the vehicle is shifted out of PARK (P) with an automatic transmission, or when the vehicle speed is greater than 15 mph (24km/h) with a manual transmission. No doors will unlock.

Language

You can choose the language in which the DIC information is displayed. Press the reset stem until LANGUAGE is displayed. While LANGUAGE is on the display, press and hold the reset stem until the language changes from ENGLISH to the language you desire. You can choose from English, Spanish, or French.

DIC Warnings and Messages

Warning messages are displayed on the DIC to notify the driver that the status of the vehicle has changed and that some action may be needed by the driver to correct the condition. More than one message may appear at one time. They will appear one after the other. The messages are displayed for three seconds each. Some messages may not require immediate action but you should press and release the trip odometer reset stem to acknowledge that you received the message and clear it from the display. Each message must be acknowledged individually. Some messages cannot be cleared from the display because they are more urgent. These messages require action before they can be removed from the DIC display. The following are the possible messages that can be displayed and some information about them.

AC (Air Conditioning) OFF

This message will be displayed when the engine coolant temperature is too high and the air conditioning in your vehicle needs to be turned off. See and *Engine Overheating on page 5-28* and *Climate Control System on page 3-18* for more information. It will be displayed along with the ENG HOT message.

ABS (Anti-Lock Brake System)

This message will be displayed on the DIC if there is a problem with your antilock brake system. Check your antilock brake system as soon as possible and have your vehicle serviced. See *Brakes on page 5-38* and *Anti-Lock Brake System Warning Light on page 3-29* for more information. Pressing the reset stem to acknowledge this message and clear it from the DIC display.

BATTERY

This message will be displayed when there is a problem with your vehicle's battery. See *Battery on page 5-41* and *Battery Warning Light on page 3-27* for more information.

BRAKES

This message will be displayed on the DIC if there is a problem with your brakes. Check your brakes as soon as possible and have your vehicle serviced. See *Brakes on page 5-38* and *Brake System Warning Light on page 3-28* for more information. Press and release the reset stem to acknowledge the message and clear it from the DIC display.

CHANGE OIL

This message will be displayed on your DIC when the oil needs to be changed. Check the oil in your vehicle as soon as possible and have your vehicle serviced. See *Engine Oil on page 5-13* and *Scheduled Maintenance on page 6-4* for more information. Press the reset stem to acknowledge the message and clear it from the display.

DOORS

This message will be displayed on your DIC when one of your doors is ajar. You should check all the doors on your vehicle to make sure they are closed. Press the reset stem to acknowledge the message and clear it from the display.

ENG (Engine) HOT

This message will be displayed on your DIC when your engine coolant temperature is hot. Check your engine coolant temperature gage. See *Engine Coolant Temperature Gage on page 3-30* for more information. You should have your vehicle serviced as soon as possible if you suspect your engine is overheating. See *Engine Overheating on page 5-28* for more information.

FLUID

This message will be displayed on the DIC if your brake fluid is low. Check the brake fluid as soon as possible and have your vehicle serviced. See *Brakes on page 5-38* for more information. Press the reset stem to acknowledge the message and clear it from the DIC display.

FUEL CAP

This message will be displayed if your vehicle's fuel cap is either off or loose. You should pull over and check to see if your vehicle's fuel cap is secure as soon as possible. You may also see the check engine light on the instrument panel cluster. See *Malfunction Indicator Lamp on page 3-30* for more information. Press the reset stem to acknowledge the message and clear it from the display.

LOW FUEL

This message will be displayed on your DIC if the level of fuel in your vehicle is low. You should also check your fuel gage. See *Fuel Gage on page 3-36* for more information. You should fill your vehicle's tank as soon as possible.

LOW TRAC (Traction)

If you have the Traction Control System (TCS), you will see this message when the TCS is active. See *Traction Control System (TCS) on page 4-9* for more information. Press and release the reset stem to acknowledge the message and clear it from the DIC display.

OIL

This message will be displayed when your oil pressure is low. See *Oil Pressure Light on page 3-34*, and *Engine Oil on page 5-13* for more information.

OIL LIFE

This message will be displayed when your GM Oil Life System needs to be checked. Press the reset stem to acknowledge the message. For more information, see "GM Oil Life System" under *DIC Controls and Displays on page 3-37*.

PARK BRK (Brake)

This message will be displayed when your vehicle's parking brake is active. See *Parking Brake on page 2-29* and *Brake System Warning Light on page 3-28* for more information. Press the reset stem to acknowledge the message and clear it from the display.

REDUCED POWER

This message will be displayed on your DIC when your vehicle's engine power is reduced. Press the reset stem to acknowledge the message and clear it from the display.

SERV (Service) 4WD (Four-Wheel Drive)

This message will be displayed on your DIC when there is a problem with your transfer case control system. Check the transfer case on your vehicle and have it serviced. See *Four-Wheel Drive on page 2-26* for more information about your transfer case. Press the reset stem to acknowledge the message and clear it from the display.

TRACTION FAULT

If you have the Traction Control System (TCS), you may see this message if there is a problem with your Traction Control System (TCS). Check your TCS as soon as possible and have your vehicle serviced. See *Traction Control System (TCS) on page 4-9* for more information. Press the reset stem to acknowledge the message and clear it from the display.

SERV VEH (Service Vehicle)

This message will be displayed on your DIC if your vehicle needs service. You should have your vehicle serviced as soon as possible.

TURN SIGNAL

This message will be displayed on your DIC when your turn signal is on for approximately 0.75 miles (1.2 km) of travel. Press the reset stem to acknowledge the message and clear it from the display.

Audio System(s)

Notice: **Before you add any sound equipment to your vehicle – like a tape player, CB radio, mobile telephone or two-way radio – be sure you can add what you want. If you can, it's very important to do it properly. Added sound equipment may interfere with the operation of your vehicle's engine, radio or other systems, and even damage them. Your vehicle's systems may interfere with the operation of sound equipment that has been added improperly.**

So, before adding sound equipment, check with your dealer and be sure to check federal rules covering mobile radio and telephone units.

Your audio system has been designed to operate easily and to give years of listening pleasure. You will get the most enjoyment out of it if you acquaint yourself with it first. Figure out which radio you have in your vehicle, find out what your audio system can do, and how to operate all of its controls to be sure you are getting the most out of the advanced engineering that went into it.

Setting the Time for Radios without Radio Data Systems (RDS)

Press and hold HR until the correct hour appears on the display. Press and hold MIN until the correct minute appears on the display. To display the time with the ignition off, press RCL, HR, or MIN and the time will appear on the display for a few seconds. There is an initial two-second delay before the clock goes into time-set mode.

Setting the Time for Radios with Radio Data Systems (RDS)

Your radio may have a button marked with an H or HR to represent hours and an M or MN to represent minutes.

Press and hold the hour button until the correct hour appears on the display. Press and hold the minute button until the correct minute appears on the display. The time may be set with the ignition on or off.

To synchronize the time with an FM station broadcasting Radio Data System (RDS) information, press and hold the hour and minute buttons at the same time until RDS TIME appears on the display. To accept this time, press and hold the hour and minute buttons, at the same time, for another 2 seconds. If the time is not available from the station, NO UPDAT will appear on the display.

RDS time is broadcast once a minute. Once you have tuned to an RDS broadcast station, it may take a few minutes for your time to update.

AM-FM Radio

Playing the Radio

PWR (Power): Press this knob to turn the system on and off.

VOL (Volume): Turn this knob to increase or to decrease volume.

RCL (Recall): Press this knob to switch the display between the radio station frequency and the time. Time display is available with the ignition turned off.

Finding a Station

AM FM: Press this button to switch between FM1, FM2, or AM. The display will show your selection.

TUNE: Turn this knob to select radio stations.

◁ **SEEK** ▷ **:** Press the right or the left arrow to go to the next or to the previous station and stay there.

To scan stations, press and hold either SEEK arrow for two seconds until you hear a beep. The radio will go to a station, play for a few seconds, then go on to the next station. Press either SEEK arrow again to stop scanning.

To scan preset stations, press and hold either SEEK arrow for more than four seconds until you hear two beeps. The radio will go to the first preset station stored on the pushbuttons, play for a few seconds, then go on to the next preset station. Press either SEEK arrow again to stop scanning presets.

The radio will seek and scan only to stations that are in the selected band and only to those with a strong signal.

Setting Preset Stations

The six numbered pushbuttons let you return to your favorite stations. You can set up to 18 stations (six FM1, six FM2, and six AM) by performing the following steps:

1. Turn the radio on.
2. Press AM FM to select FM1, FM2, or AM.
3. Tune in the desired station.
4. Press and hold one of the six numbered pushbuttons until you hear a beep. Whenever you press that numbered pushbutton, the station you set will return.
5. Repeat the steps for each pushbutton.

Setting the Tone (Bass/Treble)

AUDIO: To adjust bass and treble, press and release AUDIO until BAS or TRE appears on the display. Then press and hold the up or the down arrow to increase or to decrease. If a station is weak or noisy, you may want to decrease the treble.

To adjust bass or treble to the middle position, select BAS or TRE. Then press and hold AUDIO for more than two seconds until you hear a beep. B and a zero or T and a zero will appear on the display.

To adjust both tone controls and both speaker controls to the middle position, end out of audio by waiting for the display to change to the time display. Then press and hold AUDIO for more than two seconds until you hear a beep. CEN will appear on the display.

Adjusting the Speakers (Balance/Fade)

AUDIO: To adjust the balance between the right and the left speakers, press and release AUDIO until BAL appears on the display. Then press and hold the up or the down arrow to move the sound toward the right or the left speakers.

To adjust the fade between the front and the rear speakers, press and release AUDIO until FAD appears on the display. Then press and hold the up or the down arrow to move the sound toward the front or the rear speakers.

To adjust balance or fade to the middle position, select BAL or FAD. Then press and hold AUDIO for more than two seconds until you hear a beep. L and a zero or F and a zero will appear on the display.

To adjust both tone controls and both speaker controls to the middle position, end out of audio by waiting for the display to change to the time display. Then press and hold AUDIO for more than two seconds until you hear a beep. CEN will appear on the display.

Fade may not be available if you have a regular cab model.

Radio Messages

CAL (Calibrated): Your audio system has been calibrated for your vehicle from the factory. If CAL appears on the display it means that your radio has not been configured properly for your vehicle and must be returned to the dealer for service.

LOC (Locked): This message is displayed when the Theftlock® system has locked up. Your vehicle must be returned to the dealer for service.

Radio with CD

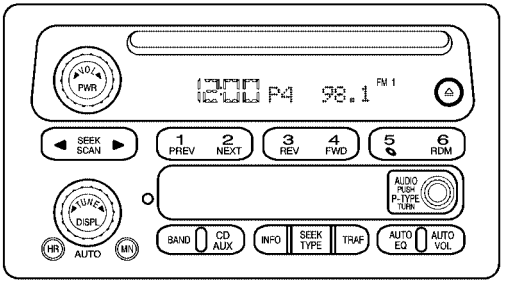

Playing the Radio

PWR (Power): Press this knob to turn the system on and off.

◀ VOL ▶ (Volume): Turn this knob to increase or to decrease volume.

AUTO VOL (Automatic Volume): With automatic volume, your audio system adjusts automatically to make up for road and wind noise as you drive. Set the volume at the desired level. Press this button to select LOW, MEDIUM, or HIGH. AVOL will appear on the display. Each higher setting will allow for more volume compensation at faster vehicle speeds. Then as you drive, automatic volume increases the volume, as necessary, to overcome noise at any speed. The volume level should always sound the same to you as you drive. NONE will appear on the display if the radio cannot determine the vehicle speed. If you do not want to use automatic volume, select OFF.

DISPL (Display): Press this knob to switch the display between the radio station frequency and the time.

For RDS, press the DISPL knob to change what appears on the display while using RDS. The display options are station name, RDS station frequency, PTY, and the name of the program (if available).

To change the default on the display, press the DISPL knob until you see the display you want, then hold the knob for two seconds. The radio will produce one beep and the selected display will now be the default.

Finding a Station

BAND: Press this button to switch between FM1, FM2, or AM. The display will show your selection.

◀ **TUNE** ▶ **:** Turn this knob to select radio stations.

◀ **SEEK** ▶ **:** Press the right or the left arrow to go to the next or to the previous station and stay there.

The radio will seek only to stations that are in the selected band and only to those with a strong signal.

◀ **SCAN** ▶ **:** Press and hold either arrow for more than two seconds. SCAN will appear on the display and you will hear one beep. The radio will go to a station, play for a few seconds, then go on to the next station. Press either arrow again to stop scanning.

To scan preset stations, press and hold either arrow for more than four seconds. PSCN will appear on the display and you will hear two beeps. The radio will go to the first preset station, play for a few seconds, then go on to the next preset station. Press either arrow again or one of the pushbuttons to stop scanning.

The radio will scan only to stations that are in the selected band and only to those with a strong signal.

Setting Preset Stations

The six numbered pushbuttons let you return to your favorite stations. You can set up to 18 stations (six FM1, six FM2, and six AM), by performing the following steps:

1. Turn the radio on.
2. Press BAND to select FM1, FM2, or AM.
3. Tune in the desired station.
4. Press AUTO EQ to select the equalization.
5. Press and hold one of the six numbered pushbuttons until you hear a beep. Whenever you press that numbered pushbutton, the station you set will return and the equalization that you selected will be automatically stored for that pushbutton.
6. Repeat the steps for each pushbutton.

Setting the Tone (Bass/Treble)

AUDIO: Push and release the AUDIO knob until BASS or TREB appears on the display. Turn the knob to increase or to decrease. The display will show the bass or treble level. If a station is weak or noisy, you may want to decrease the treble.

To adjust the bass and treble to the middle position, push and hold the AUDIO knob. The radio will produce one beep and adjust the display level to the middle position.

To adjust all tone and speaker controls to the middle position, push and hold the AUDIO knob when no tone or speaker control is displayed. All will appear on the display and you will hear a beep with the level display in the middle position.

AUTO EQ (Automatic Equalization): Press this button to select customized equalization settings designed for country/western, jazz, talk, pop, rock, and classical. Selecting CUSTOM or changing bass or treble, returns the EQ to the manual bass and treble settings.

The radio will save separate AUTO EQ settings for each preset and source.

Adjusting the Speakers (Balance/Fade)

AUDIO: To adjust the balance to the right and the left speakers, push and release the AUDIO knob until BAL appears on the display. Turn the knob to move the sound toward the right or the left speakers.

To adjust the fade to the front and the rear speakers, push and release the AUDIO knob until FADE appears on the display. Turn the knob to move the sound toward the front or the rear speakers.

To adjust the balance and fade to the middle position, push the AUDIO knob then push it again and hold it until the radio produces one beep. The balance and fade will be adjusted to the middle position and the display will show the speaker balance.

To adjust all tone and speaker controls to the middle position, push and hold the AUDIO knob when no tone or speaker control is displayed. All will appear on the display and you will hear a beep with the level display in the middle position.

Radio Data System (RDS)

Your audio system is equipped with a Radio Data System (RDS). RDS features are available for use only on FM stations that broadcast RDS information.

With RDS, your radio can do the following:

- Seek to stations broadcasting the selected type of programming
- Receive announcements concerning local and national emergencies
- Display messages from radio stations
- Seek to stations with traffic announcements

This system relies upon receiving specific information from these stations and will only work when the information is available. In rare cases, a radio station may broadcast incorrect information that will cause the radio features to work improperly. If this happens, contact the radio station.

While you are tuned to an RDS station, the station name or the call letters will appear on the display instead of the frequency. RDS stations may also provide the time of day, a program type (PTY) for current programming, and the name of the program being broadcast.

Finding a Program Type (PTY) Station

To select and find a desired PTY perform the following:

1. Turn the P-TYPE knob to activate program type select mode. TYPE and a PTY will appear on the display.
2. Turn the P-TYPE knob to select a PTY.
3. Once the desired PTY is displayed, press the SEEK TYPE button or either SEEK arrow to take you to the PTY's first station.
4. If you want to go to another station within that PTY and the PTY is displayed, press the SEEK TYPE button once. If the PTY is not displayed, press the SEEK TYPE button twice to display the PTY and then to go to another station.
5. Press P-TYPE to exit program type select mode.

   If PTY times out and is no longer on the display, go back to Step 1.

If both PTY and TRAF are on, the radio will search for stations with the selected PTY and traffic announcements.

If the radio cannot find the desired program type, NONE will appear on the display and the radio will return to the last station you were listening to.

SCAN: You can scan the stations within a PTY by performing the following:

1. Turn the P-TYPE knob to activate program type select mode. TYPE and a PTY will appear on the display.
2. Turn the P-TYPE knob to select a PTY.
3. Once the desired PTY is displayed, press either SCAN arrow, and the radio will begin scanning the stations in the PTY.
4. Press either SCAN arrow to stop at a station.

If both PTY and TRAF are on, the radio will scan for stations with the selected PTY and traffic announcements.

BAND (Alternate Frequency): Alternate frequency allows the radio to switch to a stronger station with the same program type. To turn alternate frequency on, press and hold BAND for two seconds. AF ON will appear on the display. The radio may switch to stronger stations.

To turn alternate frequency off, press and hold BAND again for two seconds. AF OFF will appear on the display. The radio will not switch to other stations.

Setting Preset PTYs

The six numbered pushbuttons let you return to your favorite PTYs. These pushbuttons have factory PTY presets. You can set up to 12 PTYs (six FM1 and six FM2) by performing the following steps:

1. Press BAND to select FM1 or FM2.
2. Turn the P-TYPE knob to activate program type select mode. TYPE and a PTY will appear on the display.
3. Turn the P-TYPE knob to select a PTY.
4. Press and hold one of the six numbered pushbuttons until you hear a beep. Whenever you press that numbered pushbutton, the PTY you set will return.
5. Repeat the steps for each pushbutton.

RDS Messages

ALERT!: Alert warns of local or national emergencies. When an alert announcement comes on the current radio station, ALERT! will appear on the display. You will hear the announcement, even if the volume is muted or a CD is playing. If a CD is playing, play will stop during the announcement. You will not be able to turn off alert announcements.

ALERT! will not be affected by tests of the emergency broadcast system. This feature is not supported by all RDS stations.

INFO (Information): If the current station has a message, the information symbol will appear on the display. Press this button to see the message. The message may display the artist, song title, call in phone numbers, etc.

If the whole message is not displayed, parts of the message will appear every three seconds. To scroll through the message at your own speed, press the INFO button repeatedly. A new group of words will appear on the display with each press. Once the complete message has been displayed, the information symbol will disappear from the display until another new message is received. The old message can be displayed by pressing the INFO button. You can view an old message until a new message is received or a different station is tuned to.

When a message is not available from a station, NO INFO will appear on the display.

TRAF (Traffic): If TRAF appears on the display, the tuned station broadcasts traffic announcements and when a traffic announcement comes on the tuned radio station you will hear it.

If the current tuned station does not broadcast traffic announcements, press this button and the radio will seek to a station that does. When the radio finds a station that broadcasts traffic announcements, the radio will stop and TRAF will be displayed. When a traffic announcement comes on the tuned radio station you will hear it. If no station is found, NO TRAFFIC will appear on the display.

If TRAF is on the display you can press the TRAF button to turn off the traffic announcements.

Your radio will play the traffic announcement even if the volume is low. Your radio will interrupt the play of a CD if the last tuned station broadcasts traffic announcements.

Radio Messages

CAL ERR (Calibration Error): Your audio system has been calibrated for your vehicle from the factory. If CAL ERR appears on the display, it means that your radio has not been configured properly for your vehicle and must be returned to the dealer for service.

LOCKED: This message is displayed when the THEFTLOCK® system has locked up. You must return to the dealer for service.

Playing a CD

Insert a CD partway into the slot, label side up. The player will pull it in and the CD should begin playing. The CD symbol will appear on the display. If you want to insert a CD with the ignition off, first press the eject button or the DISPL knob.

If you turn off the ignition or radio with a CD in the player, it will stay in the player. When you turn on the ignition or radio, the CD will start playing, where it stopped, if it was the last selected audio source.

As each new track starts to play, the track number will appear on the display.

The CD player can play the small 8 cm single CDs with an adapter ring. Full-size CDs and the smaller CDs are loaded in the same manner.

If playing a CD-R the sound quality may be reduced due to CD-R quality, the method of recording, the quality of the music that has been recorded, and the way the CD-R has been handled. You may experience an increase in skipping, difficulty in finding tracks and/or difficulty in loading and ejecting. If these problems occur try a known good CD.

Do not add paper labels to CDs, they could get caught in the CD player.

Do not play 3 inch CDs without a standard adapter CD.

If an error appears on the display, see “CD Messages” later in this section.

1 PREV (Previous): Press this pushbutton to go to the start of the current track if it has been playing for more than eight seconds. TRACK and the track number will appear on the display. If you hold this pushbutton or press it more than once, the player will continue moving backward through the CD.

2 NEXT: Press this pushbutton to go to the next track. TRACK and the track number will appear on the display. If you hold this pushbutton or press it more than once, the player will continue moving forward through the CD.

3 REV (Reverse): Press and hold this pushbutton to reverse quickly within a track. Press and hold this pushbutton for less than two seconds to reverse at six times the normal playing speed. Press and hold it for more than two seconds to reverse at 17 times the normal playing speed. Release it to play the passage. ET and the elapsed time of the track will appear on the display.

4 FWD (Forward): Press and hold this pushbutton to advance quickly within a track. Press and hold this pushbutton for less than two seconds to advance at six times the normal playing speed. Press and hold it for more than two seconds to advance at 17 times the normal playing speed. Release it to play the passage. ET and the elapsed time of the track will appear on the display.

6 RDM (Random): Press this pushbutton to hear the tracks in random, rather than sequential, order. RDM ON will appear on the display. RDM T and the track number will appear on the display when each track starts to play. Press this pushbutton again to turn off random play. RDM OFF will appear on the display.

◀ SEEK ▶ : Press the left arrow to go to the start of the current or to the previous track. Press the right arrow to go to the start of the next track. If you hold either arrow or press it more than once, the player will continue moving backward or forward through the CD.

◀ **SCAN** ▶ **:** Press and hold either SCAN arrow for more than two seconds until SCAN appears on the display and you hear a beep. Use this feature to listen to 10 seconds of each track of the CD. Press either SCAN arrow again, to stop scanning.

DISPL (Display): Press this knob to see how long the current track has been playing. ET and the elapsed time of the track will appear on the display. To change the default on the display (track or elapsed time), press this knob until you see the display you want, then hold the knob for two seconds. The radio will produce one beep and the selected display will now be the default.

BAND: Press this button to listen to the radio when a CD is playing. The inactive CD will remain safely inside the radio for future listening.

CD AUX (Auxiliary): Press this button to play a CD when listening to the radio. The CD symbol will appear on the display when a CD is loaded.

⏏ **(Eject):** Press this button to stop a CD when it is playing or to eject a CD when it is not playing. Eject may be activated with either the ignition or radio off. CDs may be loaded with the radio and ignition off if this button is pressed first.

CD Messages

If the CD comes out, it could be for one of the following reasons:

- It is very hot. When the temperature returns to normal, the CD should play.
- You are driving on a very rough road. When the road becomes smooth, the CD should play.
- The CD is dirty, scratched, wet, or upside down.
- The air is very humid. If so, wait about an hour and try again.
- There may have been a problem while burning the CD.
- The label may be caught in the CD player.

If the CD is not playing correctly, for any other reason, try a known good CD.

If any error occurs repeatedly or if an error cannot be corrected, contact your dealer. If your radio displays an error message, write it down and provide it to your dealer when reporting the problem.

Radio with Six-Disc CD

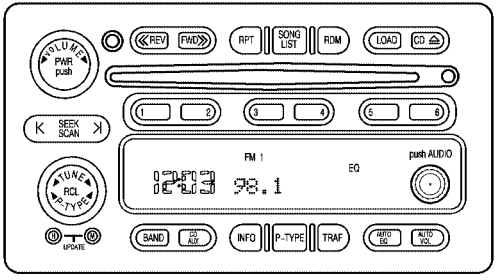

Playing the Radio

PWR (Power): Push this knob to turn the system on and off.

VOLUME: Turn this knob to increase or to decrease volume.

AUTO VOL (Automatic Volume): With automatic volume, your audio system will adjust automatically to make up for road and wind noise as you drive.

Set the volume at the desired level. Press this button to select MIN, MED, or MAX. Each higher setting will allow for more volume compensation at faster vehicle speeds. Then, as you drive, automatic volume increases the volume, as necessary, to overcome noise at any speed. The volume level should always sound the same to you as you drive. If you do not want to use automatic volume, select OFF.

RCL (Recall): Press this knob to switch the display between the radio station frequency and the time. Press this knob with the ignition off to display the time.

To change the default on the display, press the RCL knob until you see the display you want, then hold the knob until the display flashes. The selected display will now be the default.

Finding a Station

BAND: Press this button to switch between FM1, FM2, AM. The display will show your selection.

TUNE: Turn this knob to select radio stations.

⊲ **SEEK** ⊳ **:** Press the right or the left arrow to go to the next or to the previous station and stay there.

The radio will seek only to stations that are in the selected band and only to those with a strong signal.

⊲ **SCAN** ⊳ **:** Press and hold either SCAN arrow for two seconds until SC appears on the display and you hear a beep. The radio will go to a station, play for a few seconds, then go on to the next station. Press either SCAN arrow again to stop scanning.

To scan preset stations, press and hold either SCAN arrow for more than four seconds. PRESET SCAN will appear on the display and you will hear a double beep. The radio will go to a preset station stored on your pushbuttons, play for a few seconds, then go on to the next preset station. Press either SCAN arrow again to stop scanning presets.

The radio will scan only to stations that are in the selected band and only to those with a strong signal.

Setting Preset Stations

The six numbered pushbuttons let you return to your favorite stations. You can set up to 18 stations (six FM1, six FM2, and six AM), by performing the following steps:

1. Turn the radio on.
2. Press BAND to select FM1, FM2, or AM.
3. Tune in the desired station.
4. Press AUTO EQ to select the equalization.
5. Press and hold one of the six numbered pushbuttons until you hear a beep. Whenever you press that numbered pushbutton, the station you set will return and the equalization that you selected will be automatically stored for that pushbutton.
6. Repeat the steps for each pushbutton.

Setting the Tone (Bass/Treble)

AUDIO: Push and release the AUDIO knob until BASS, MID, or TREB appears on the display. Turn the knob to increase or to decrease. The display will show the bass, midrange, or treble level. If a station is weak or noisy, you may want to decrease the treble.

To adjust the bass, midrange, and treble to the middle position, push the AUDIO knob. The radio will produce one beep and adjust the display level to the middle position.

To adjust all tone and speaker controls to the middle position, push and hold the AUDIO knob when no tone or speaker control is displayed. CENTERED will appear on the display and you will hear a beep.

AUTO EQ (Automatic Equalization): Press this button to select customized equalization settings designed for country/western, jazz, talk, pop, rock, and classical.

To return the bass and treble to the custom mode, press and release the AUDIO knob, until CUSTOM appears on the display.

Adjusting the Speakers (Balance/Fade)

AUDIO: To adjust the balance to the right and the left speakers, push and release the AUDIO knob until BAL appears on the display. Turn the knob to move the sound toward the right or the left speakers.

To adjust the fade to the front and the rear speakers, push and release the AUDIO knob until FADE appears on the display. Turn the knob to move the sound toward the front or the rear speakers.

To adjust the balance and fade to the middle position, push and hold the AUDIO knob. The radio will produce one beep and adjust the display level to the middle position.

To adjust all tone and speaker controls to the middle position, push and hold the AUDIO knob when no tone or speaker control is displayed. CENTERED will appear on the display and you will hear a beep.

Radio Data System (RDS)

Your audio system is equipped with a Radio Data System (RDS). RDS features are available for use only on FM stations that broadcast RDS information.

With RDS, your radio can do the following:

- Seek to stations broadcasting the selected type of programming
- Receive announcements concerning local and national emergencies
- Display messages from radio stations
- Seek to stations with traffic announcements

This system relies upon receiving specific information from these stations and will only work when the information is available. In rare cases, a radio station may broadcast incorrect information that will cause the radio features to work improperly. If this happens, contact the radio station.

While you are tuned to an RDS station, the station name or the call letters will appear on the display instead of the frequency. RDS stations may also provide the time of day, a program type (PTY) for current programming, and the name of the program being broadcast.

Finding a Program Type (PTY) Station

To select and find a desired PTY perform the following:

1. Press the P-TYPE button to activate program type select mode. P-TYPE and the last selected PTY will appear on the display.
2. Turn the P-TYPE knob to select a PTY.
3. Once the desired PTY is displayed, press either SEEK arrow to take you to the PTY's first station.
4. If you want to go to another station within that PTY and the PTY is displayed, press either SEEK arrow once. If the PTY is not displayed, press either SEEK arrow twice to display the PTY and then to go to another station.
5. Press P-TYPE to exit program type select mode.

   If PTY times out and is no longer on the display, go back to Step 1.

If both P-TYPE and TRAF are on, the radio will search for stations with the selected PTY and traffic announcements.

To use the PTY interrupt feature, press and hold the P-TYPE button until you hear a beep on the PTY you want to interrupt with. When selected, an asterisk will appear beside that PTY on the display. You may select multiple interrupts if desired. When you are listening to a CD, the last selected RDS station will interrupt play if that selected program type format is broadcast.

SCAN: You can also scan through the stations within a PTY by performing the following:

1. Press the P-TYPE button to activate program type select mode. P-TYPE and the last selected PTY will appear on the display.
2. Turn the P-TYPE knob to select a PTY.
3. Once the desired PTY is displayed, press and hold either SCAN arrow, and the radio will begin scanning the stations in the PTY.
4. Press either SCAN arrow to stop at a station.

If both P-TYPE and TRAF are on, the radio will scan for stations with the selected PTY and traffic announcements.

BAND (Alternate Frequency): Alternate frequency allows the radio to switch to a stronger station with the same program type. To turn alternate frequency on, press and hold BAND for two seconds. AF ON will appear on the display. The radio may switch to stronger stations.

To turn alternate frequency off, press and hold BAND again for two seconds. AF OFF will appear on the display. The radio will not switch to other stations.

Setting Preset PTYs

The six numbered pushbuttons let you return to your favorite PTYs. These pushbuttons have factory PTY presets. You can set up to 12 PTYs (six FM1 and six FM2) by performing the following steps:

1. Press BAND to select FM1 or FM2.
2. Press the P-TYPE button to activate program type select mode. P-TYPE and the last selected PTY will appear on the display.
3. Turn the P-TYPE knob to select a PTY.
4. Press and hold one of the six numbered pushbuttons until you hear a beep. Whenever you press that numbered pushbutton, the PTY you set will return.
5. Repeat the steps for each pushbutton.

RDS Messages

ALERT!: Alert warns of local or national emergencies. When an alert announcement comes on the current radio station, ALERT! will appear on the display. You will hear the announcement, even if the volume is muted or a CD is playing. If a CD is playing, play will stop during the announcement. You will not be able to turn off alert announcements.

ALERT! will not be affected by tests of the emergency broadcast system. This feature is not supported by all RDS stations.

INFO (Information): If the current station has a message, INFO will appear on the display. Press this button to see the message. The message may display the artist, song title, call in phone numbers, etc.

If the whole message is not displayed, parts of the message will appear every three seconds. To scroll through the message at your own speed, press the INFO button repeatedly. A new group of words will appear on the display with each press. Once the complete message has been displayed, INFO will disappear from the display until another new message is received. The old message can be displayed by pressing the INFO button. You can view an old message until a new message is received or a different station is tuned to.

TRAF (Traffic): If TRAF appears on the display, the tuned station broadcasts traffic announcements. To receive the traffic announcement from the tuned station, press this button. Brackets will be displayed around TRAF and when a traffic announcement comes on the tuned radio station you will hear it.

If the current tuned station does not broadcast traffic announcements, press this button and the radio will seek to a station that does. When the radio finds a station that broadcasts traffic announcements, the radio will stop and brackets will be displayed around TRAF. When a traffic announcement comes on the tuned radio station you will hear it. If no station is found, NO TRAFFIC will appear on the display.

If the brackets are on the display and TRAF is not, you can then press the TRAF button to remove the brackets or use the TUNE knob or the SEEK arrows to go to a station that supports traffic announcements. If no station is found, NO TRAFFIC will appear on the display.

Your radio will play the traffic announcement even if the volume is low. Your radio will interrupt the play of a CD if the last tuned station broadcasts traffic announcements and the brackets are displayed.

Playing a CD

The CD player can play the smaller 8 cm single CDs with an adapter ring. Full-size CDs and the smaller CDs are loaded in the same manner.

If playing a CD-R the sound quality may be reduced due to CD-R quality, the method of recording, the quality of the music that has been recorded, and the way the CD-R has been handled. You may experience an increase in skipping, difficulty in finding tracks and/or difficulty in loading and ejecting. If these problems occur try a known good CD.

Do not add paper labels to CDs, they could get caught in the CD player.

Do not play 3 inch CDs without a standard adapter CD.

If an error appears on the display, see “CD Messages” later in this section.

LOAD: Press the LOAD button to load CDs into the CD player. This CD player will hold up to six CDs.

To insert one CD, do the following:

1. Turn the ignition on.
2. Press and release the LOAD button.
3. Wait for the light, located to the right of the slot, to turn green.
4. Load a CD. Insert the CD partway into the slot, label side up. The player will pull the CD in.

When a CD is inserted, the CD symbol will appear on the display. If you select an equalization setting for your CD, it will be activated each time you play a CD.

As each new track starts to play, the track number will appear on the display.

To insert multiple CDs, do the following:

1. Turn the ignition on.
2. Press and hold the LOAD button for two seconds.

   You will hear a beep and the light, located to the right of the slot, will begin to flash and LOAD ALL will appear on the display.
3. Once the light stops flashing and turns green, load a CD. Insert the CD partway into the slot, label side up. The player will pull the CD in.
4. Once the CD is loaded, the light will begin flashing again. Once the light stops flashing and turns green you can load another CD. The CD player takes up to six CDs. Do not try to load more than six.

To load more than one CD but less than six, complete Steps 1 through 3. When you have finished loading CDs, press the LOAD button to cancel the loading function. The radio will begin to play the last CD loaded.

When a CD is inserted, the CD symbol will appear on the display. If more than one CD has been loaded, a number for each CD will appear on the display. If you select an equalization setting for your CD, it will be activated each time you play a CD.

As each new track starts to play, the track number will appear on the display.

Playing a Specific Loaded CD

For every CD loaded, a number will appear on the display. To play a specific CD, first press the CD AUX button, then press the numbered pushbutton that corresponds to the CD you want to play. A small bar will appear under the CD number that is playing, and the track number will appear.

If an error appears on the display, see “CD Messages” later in this section.

CD ⏏ (Eject): Press the CD eject button to eject a single CD or multiple CDs. To eject the CD that is currently playing, press and release this button. To eject multiple CDs, press and hold this button for two seconds. You will hear a beep and the light will flash to let you know when a CD is being ejected.

REMOVE CD will appear on the display. You can now remove the CD. If the CD is not removed, after 25 seconds, the CD will be automatically pulled back into the receiver. If you try to push the CD back into the receiver, before the 25 second time period is complete, the receiver will sense an error and will try to eject the CD several times before stopping.

Do not repeatedly press the CD button to eject a CD after you have tried to push it in manually. The receivers 25-second eject timer will reset at each press of eject, which will cause the receiver to not eject the CD until the 25-second time period has elapsed.

Once the player stops and the CD is ejected, remove the CD. After removing the CD, push the PWR knob off and then on again. This will clear the CD-sensing feature and enable CDs to be loaded into the player again.

≪ **REV (Reverse):** Press and hold this button to reverse quickly within a track. You will hear sound at a reduced volume. Release this button to play the passage. The elapsed time of the track will appear on the display.

FWD ≫ (Forward): Press and hold this button to advance quickly within a track. You will hear sound at a reduced volume. Release this button to play the passage. The elapsed time of the track will appear on the display.

RPT (Repeat): With repeat, you can repeat one track or an entire CD. To use repeat, do the following:

- To repeat the track you are listening to, press and release the RPT button. RPT will appear on the display. Press RPT again to turn off repeat play.
- To repeat the CD you are listening to, press and hold the RPT button for two seconds. RPT will appear on the display. Press RPT again to turn off repeat play.

RDM (Random): With random, you can listen to the tracks in random, rather than sequential, order, on one CD or on all of the CDs. To use random, do one of the following:

- To play the tracks on the CD you are listening to in random order, press and release the RDM button. RANDOM ONE will appear on the display. Press RDM again to turn off random play.
- To play the tracks on all of the CDs that are loaded in random order, press and hold RDM for more than two seconds. You will hear a beep and RANDOM ALL will appear on the display. Press RDM again to turn off random play.

⊲ SEEK ⊳ : Press the left arrow to go to the start of the current track, if more than ten seconds have played. Press the right arrow to go to the next track. If you hold either arrow or press it more than once, the player will continue moving backward or forward through the CD.

⊲ SCAN ⊳ : To scan one CD, press and hold either SCAN arrow for more than two seconds until SCAN appears on the display and you hear a beep. Use this feature to listen to 10 seconds of each track of the currently selected CD. Press either SCAN arrow again, to stop scanning.

To scan all loaded CDs, press and hold either SCAN arrow for more than four seconds until CD SCAN appears on the display and you hear a beep. Use this feature to listen to 10 seconds of the first track of each CD loaded. Press either SCAN arrow again, to stop scanning.

RCL (Recall): Press this knob to see how long the current track has been playing. To change the default on the display (track or elapsed time), press this knob until you see the display you want, then hold the knob until the display flashes. The selected display will now be the default.

BAND: Press this button to play the radio when a CD(s) is in the player. The inactive CD(s) will remain safely inside the radio for future listening.

CD AUX (Auxiliary): Press this button to play a CD when listening to the radio.

Using Song List Mode

The six-disc CD changer has a feature called song list. This feature is capable of saving 20 track selections.

To save tracks into the song list feature, perform the following steps:

1. Turn the CD player on and load it with at least one CD. See “LOAD CD” listed previously in this section for more information.
2. Check to see that the CD changer is not in song list mode. S-LIST should not appear in the display. If S-LIST is present, press the SONG LIST button to turn it off.
3. Select the desired CD by pressing the numbered pushbutton and then use the SEEK SCAN right arrow button to locate the track that you want to save. The track will begin to play.
4. Press and hold the SONG LIST button for two or more seconds to save the track into memory. When SONG LIST is pressed a beep will be heard immediately. After two seconds of continuously pressing SONG LIST, two beeps will sound to confirm that the track has been saved.
5. Repeat Steps 3 and 4 for saving other selections.

S-LIST FULL will appear on the display, if you try to save more than 20 selections.

To play the song list, press the SONG LIST button. One beep will be heard and S-LIST will appear on the display. The recorded tracks will begin to play in the order that they were saved.

You may seek through the song list by using the SEEK SCAN arrows. Seeking past the last saved track will return you to the first saved track.

To delete tracks from the song list, perform the following steps:

1. Turn the CD player on.
2. Press the SONG LIST button to turn song list on. S-LIST will appear on the display.
3. Press the SEEK SCAN arrows to select the desired track to be deleted.
4. Press and hold the SONG LIST button for two seconds. When SONG LIST is pressed, one beep will be heard immediately. After two seconds of continuously pressing the SONG LIST button, two beeps will be heard to confirm that the track has been deleted.

After a track has been deleted, the remaining tracks are moved up the list. When another track is added to the song list, the track will be added to the end of the list.

To delete the entire song list, perform the following steps:

1. Turn the CD player on.
2. Press the SONG LIST button to turn song list on. S-LIST will appear on the display.
3. Press and hold the SONG LIST button for more than four seconds. A beep will be heard, followed by two beeps after two seconds and a final beep will be heard after four seconds. S-LIST EMPTY will appear on the display indicating that the song list has been deleted.

If a CD is ejected, and the song list contains saved tracks from that CD, those tracks are automatically deleted from the song list. Any tracks saved to the song list again are added to the bottom of the list.

To end song list mode, press the SONG LIST button. One beep will be heard and S-LIST will be removed from the display.

CD Messages

CHECK CD: If this message appears on the radio display, it could be for one of the following reasons:

- It is very hot. When the temperature returns to normal, the CD should play.
- You are driving on a very rough road. When the road becomes smooth, the CD should play.
- The CD is dirty, scratched, wet, or upside down.
- The air is very humid. If so, wait about an hour and try again.
- There may have been a problem while burning the CD.
- The label may be caught in the CD player.

If the CD is not playing correctly, for any other reason, try a known good CD.

If any error occurs repeatedly or if an error cannot be corrected, contact your dealer. If your radio displays an error message, write it down and provide it to your dealer when reporting the problem.

Theft-Deterrent Feature (Non-RDS Radios)

THEFTLOCK® is designed to discourage theft of your radio. The feature works automatically by learning a portion of the Vehicle Identification Number (VIN). If the radio is moved to a different vehicle, it will not operate and LOC will appear on the display.

With THEFTLOCK® activated, your radio will not operate if stolen.

Theft-Deterrent Feature (RDS Radios)

THEFTLOCK® is designed to discourage theft of your radio. The feature works automatically by learning a portion of the Vehicle Identification Number (VIN). If the radio is moved to a different vehicle, it will not operate and LOCKED will appear on the display.

When the radio and vehicle are turned off, the blinking red light indicates that THEFTLOCK® is armed.

With THEFTLOCK® activated, your radio will not operate if stolen.

Radio Reception

AM

The range for most AM stations is greater than for FM, especially at night. The longer range, however, can cause stations to interfere with each other. AM can pick up noise from things like storms and power lines. Try reducing the treble to reduce this noise.

FM

FM stereo will give you the best sound, but FM signals will reach only about 10 to 40 miles (16 to 65 km). Tall buildings or hills can interfere with FM signals, causing the sound to come and go.

Care of Your CDs

Handle CDs carefully. Store them in their original cases or other protective cases and away from direct sunlight and dust. If the surface of a CD is soiled, dampen a clean, soft cloth in a mild, neutral detergent solution and clean it, wiping from the center to the edge.

Be sure never to touch the side without writing when handling CDs. Pick up CDs by grasping the outer edges or the edge of the hole and the outer edge.

Care of Your CD Player

The use of CD lens cleaners for CD players is not advised, due to the risk of contaminating the lens of the CD optics with lubricants internal to the CD mechanism.

Fixed Mast Antenna

The fixed mast antenna can withstand most car washes without being damaged. If the mast should ever become slightly bent, you can straighten it out by hand. If the mast is badly bent, you should replace it.

Check occasionally to be sure the mast is still tightened to the fender. If tightening is required, tighten by hand, then with a wrench one quarter turn.

Chime Level Adjustment

The radio is the vehicle chime producer. To change the volume level, press and hold pushbutton 6 with the ignition on and the radio power off. The chime volume level will change from the normal level to loud, and LOUD will appear on the display. To change back to the default or normal setting, press and hold pushbutton 6 again. The chime level will change from the loud level to normal, and NORMAL will appear on the display. Each time the chime volume is changed, three chimes will sound as an example of the new volume selected. Removing the radio and not replacing it with a factory radio or chime module will disable vehicle chimes.

Section 4 Driving Your Vehicle

Your Driving, the Road, and Your Vehicle 4-2
Defensive Driving 4-2
Drunken Driving 4-3
Control of a Vehicle 4-6
Braking 4-6
Traction Control System (TCS) 4-9
Steering 4-10
Off-Road Recovery 4-12
Passing 4-13
Loss of Control 4-14
Off-Road Driving with Your Four-Wheel-Drive Vehicle 4-15
Driving at Night 4-29
Driving in Rain and on Wet Roads 4-31
City Driving 4-34
Freeway Driving 4-35
Before Leaving on a Long Trip 4-36
Highway Hypnosis 4-37
Hill and Mountain Roads 4-38
Winter Driving 4-40
If You Are Stuck: In Sand, Mud, Ice or Snow 4-44

Towing 4-47
Towing Your Vehicle 4-47
Recreational Vehicle Towing 4-47
Loading Your Vehicle 4-52
Truck-Camper Loading Information 4-59
Trailer Recommendations 4-59
Pickup Conversion to Chassis Cab 4-59
Towing a Trailer 4-60

Your Driving, the Road, and Your Vehicle

Defensive Driving

The best advice anyone can give about driving is: Drive defensively.

Please start with a very important safety device in your vehicle: Buckle up. See *Safety Belts: They Are for Everyone on page 1-11*.

Defensive driving really means “be ready for anything.” On city streets, rural roads or freeways, it means “always expect the unexpected.”

Assume that pedestrians or other drivers are going to be careless and make mistakes. Anticipate what they might do. Be ready for their mistakes.

Rear-end collisions are about the most preventable of accidents. Yet they are common. Allow enough following distance. It is the best defensive driving maneuver, in both city and rural driving. You never know when the vehicle in front of you is going to brake or turn suddenly.

Defensive driving requires that a driver concentrate on the driving task. Anything that distracts from the driving task — such as concentrating on a cellular telephone call, reading, or reaching for something on the floor — makes proper defensive driving more difficult and can even cause a collision, with resulting injury. Ask a passenger to help do things like this, or pull off the road in a safe place to do them yourself. These simple defensive driving techniques could save your life.

Drunken Driving

Death and injury associated with drinking and driving is a national tragedy. It is the number one contributor to the highway death toll, claiming thousands of victims every year.

Alcohol affects four things that anyone needs to drive a vehicle:

- Judgment
- Muscular Coordination
- Vision
- Attentiveness.

Police records show that almost half of all motor vehicle-related deaths involve alcohol. In most cases, these deaths are the result of someone who was drinking and driving. In recent years, more than 16,000 annual motor vehicle-related deaths have been associated with the use of alcohol, with more than 300,000 people injured.

Many adults — by some estimates, nearly half the adult population — choose never to drink alcohol, so they never drive after drinking. For persons under 21, it is against the law in every U.S. state to drink alcohol. There are good medical, psychological and developmental reasons for these laws.

The obvious way to eliminate the leading highway safety problem is for people never to drink alcohol and then drive. But what if people do? How much is “too much” if someone plans to drive? It is a lot less than many might think. Although it depends on each person and situation, here is some general information on the problem.

The Blood Alcohol Concentration (BAC) of someone who is drinking depends upon four things:

- The amount of alcohol consumed
- The drinker’s body weight
- The amount of food that is consumed before and during drinking
- The length of time it has taken the drinker to consume the alcohol.

According to the American Medical Association, a 180 lb (82 kg) person who drinks three 12 ounce (355 ml) bottles of beer in an hour will end up with a BAC of about 0.06 percent. The person would reach the same BAC by drinking three 4 ounce (120 ml) glasses of wine or three mixed drinks if each had 1-1/2 ounces (45 ml) of liquors like whiskey, gin or vodka.

It is the amount of alcohol that counts. For example, if the same person drank three double martinis (3 ounces or 90 ml of liquor each) within an hour, the person's BAC would be close to 0.12 percent. A person who consumes food just before or during drinking will have a somewhat lower BAC level.

There is a gender difference, too. Women generally have a lower relative percentage of body water than men. Since alcohol is carried in body water, this means that a woman generally will reach a higher BAC level than a man of her same body weight will when each has the same number of drinks.

The law in an increasing number of U.S. states, and throughout Canada, sets the legal limit at 0.08 percent. In some other countries, the limit is even lower. For example, it is 0.05 percent in both France and Germany. The BAC limit for all commercial drivers in the United States is 0.04 percent.

The BAC will be over 0.10 percent after three to six drinks (in one hour). Of course, as we have seen, it depends on how much alcohol is in the drinks, and how quickly the person drinks them.

But the ability to drive is affected well below a BAC of 0.10 percent. Research shows that the driving skills of many people are impaired at a BAC approaching 0.05 percent, and that the effects are worse at night. All drivers are impaired at BAC levels above 0.05 percent. Statistics show that the chance of being in a collision increases sharply for drivers who have a BAC of 0.05 percent or above. A driver with a BAC level of 0.06 percent has doubled his or her chance of having a collision. At a BAC level of 0.10 percent, the chance of this driver having a collision is 12 times greater; at a level of 0.15 percent, the chance is 25 times greater!

The body takes about an hour to rid itself of the alcohol in one drink. No amount of coffee or number of cold showers will speed that up. “I will be careful” is not the right answer. What if there is an emergency, a need to take sudden action, as when a child darts into the street? A person with even a moderate BAC might not be able to react quickly enough to avoid the collision.

There is something else about drinking and driving that many people do not know. Medical research shows that alcohol in a person’s system can make crash injuries worse, especially injuries to the brain, spinal cord or heart. This means that when anyone who has been drinking — driver or passenger — is in a crash, that person’s chance of being killed or permanently disabled is higher than if the person had not been drinking.

⚠ CAUTION:

Drinking and then driving is very dangerous. Your reflexes, perceptions, attentiveness and judgment can be affected by even a small amount of alcohol. You can have a serious — or even fatal — collision if you drive after drinking. Please do not drink and drive or ride with a driver who has been drinking. Ride home in a cab; or if you are with a group, designate a driver who will not drink.

Control of a Vehicle

You have three systems that make your vehicle go where you want it to go. They are the brakes, the steering and the accelerator. All three systems have to do their work at the places where the tires meet the road.

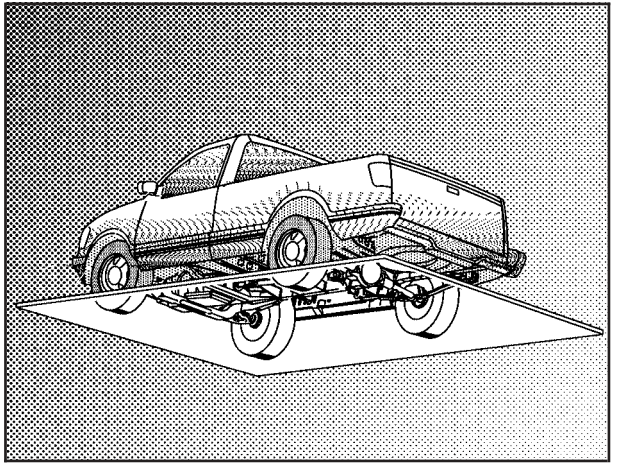

Sometimes, as when you are driving on snow or ice, it is easy to ask more of those control systems than the tires and road can provide. That means you can lose control of your vehicle.

Braking

Braking action involves *perception time* and *reaction time.*

First, you have to decide to push on the brake pedal. That is *perception time.* Then you have to bring up your foot and do it. That is *reaction time.*

Average *reaction time* is about 3/4 of a second. But that is only an average. It might be less with one driver and as long as two or three seconds or more with another. Age, physical condition, alertness, coordination and eyesight all play a part. So do alcohol, drugs and frustration. But even in 3/4 of a second, a vehicle moving at 60 mph (100 km/h) travels 66 feet (20 m). That could be a lot of distance in an emergency, so keeping enough space between your vehicle and others is important.

And, of course, actual stopping distances vary greatly with the surface of the road (whether it is pavement or gravel); the condition of the road (wet, dry, icy); tire tread; the condition of your brakes; the weight of the vehicle and the amount of brake force applied.

Avoid needless heavy braking. Some people drive in spurts — heavy acceleration followed by heavy braking — rather than keeping pace with traffic. This is a mistake. Your brakes may not have time to cool between hard stops. Your brakes will wear out much faster if you do a lot of heavy braking. If you keep pace with the traffic and allow realistic following distances, you will eliminate a lot of unnecessary braking. That means better braking and longer brake life.

If your engine ever stops while you are driving, brake normally but do not pump your brakes. If you do, the pedal may get harder to push down. If your engine stops, you will still have some power brake assist. But you will use it when you brake. Once the power assist is used up, it may take longer to stop and the brake pedal will be harder to push.

Anti-lock Brake System

Your vehicle has anti-lock brakes. ABS is an advanced electronic braking system that will help prevent a braking skid.

When you start your engine and begin to drive away, your anti-lock brake system will check itself. You may hear a momentary motor or clicking noise while this test is going on. This is normal.

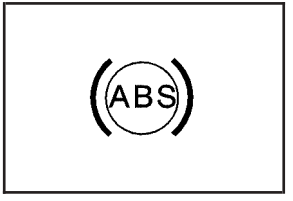

If there is a problem with the anti-lock brake system, this warning light will stay on. See *Anti-Lock Brake System Warning Light on page 3-29*.

Let us say the road is wet and you are driving safely. Suddenly, an animal jumps out in front of you. You slam on the brakes and continue braking. Here is what happens with ABS:

A computer senses that wheels are slowing down. If one of the wheels is about to stop rolling, the computer will separately work the brakes at each front wheel and at both rear wheels.

The anti-lock system can change the brake pressure faster than any driver could. The computer is programmed to make the most of available tire and road conditions. This can help you steer around the obstacle while braking hard.

As you brake, your computer keeps receiving updates on wheel speed and controls braking pressure accordingly.

Remember: Anti-lock does not change the time you need to get your foot up to the brake pedal or always decrease stopping distance. If you get too close to the vehicle in front of you, you will not have time to apply your brakes if that vehicle suddenly slows or stops. Always leave enough room up ahead to stop, even though you have anti-lock brakes.

Using Anti-Lock

Do not pump the brakes. Just hold the brake pedal down firmly and let anti-lock work for you. You may feel the brakes vibrate, or you may notice some noise, but this is normal.

Braking in Emergencies

With anti-lock, you can steer and brake at the same time. In many emergencies, steering can help you more than even the very best braking.

Traction Control System (TCS)

Your vehicle may have a Traction Control System (TCS) that limits wheel spin. This is especially useful in slippery road conditions. The system operates only if it senses that one or both of the rear wheels are spinning or beginning to lose traction. When this happens, the system reduces engine power and may also upshift the transmission to limit wheel spin.

You may feel or hear the system working, but this is normal.

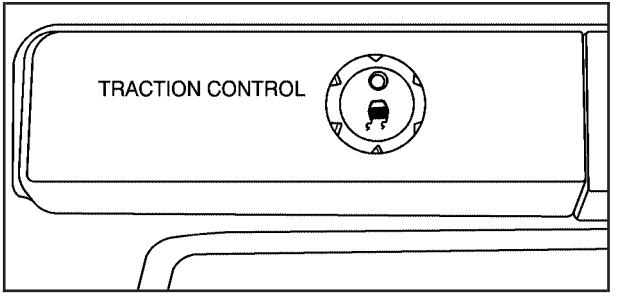

The TCS button is located on your instrument panel. Press this button to turn the TCS off and on.

When the traction control system is turned off, an indicator light on the button will illuminate.

If your vehicle is in cruise control when the traction control system begins to limit wheel spin, the cruise control will automatically disengage. When road conditions allow you to safely use it again, you may re-engage the cruise control. See “Cruise Control” under *Turn Signal/Multifunction Lever on page 3-5*.

TCS operates in all transmission shift lever positions. But the system can upshift the transmission only as high as the shift lever position you have chosen, so you should use the lower gears only when necessary. See *Automatic Transmission Operation on page 2-21* and/or *Manual Transmission Operation on page 2-24* for more information.

If there is a problem with TCS, TRACTION/FAULT will be displayed on your Driver Information Center (DIC). See *DIC Warnings and Messages on page 3-39* for more information.

When this warning is displayed, the system will not limit wheel spin. Adjust your driving accordingly.

To limit wheel spin, especially in slippery road conditions, you should always leave TCS on. But you can turn the system off if you ever need to. You should turn the system off if your vehicle ever gets stuck in sand, mud or snow and rocking the vehicle is required. See “Rocking Your Vehicle To Get It Out” under *If You Are Stuck: In Sand, Mud, Ice or Snow on page 4-44*.

Steering

Power Steering

If you lose power steering assist because the engine stops or the system is not functioning, you can steer but it will take much more effort.

Steering Tips

Driving on Curves

It is important to take curves at a reasonable speed.

A lot of the “driver lost control” accidents mentioned on the news happen on curves. Here is why:

Experienced driver or beginner, each of us is subject to the same laws of physics when driving on curves. The traction of the tires against the road surface makes it possible for the vehicle to change its path when you turn the front wheels. If there is no traction, inertia will keep the vehicle going in the same direction. If you have ever tried to steer a vehicle on wet ice, you will understand this.

The traction you can get in a curve depends on the condition of your tires and the road surface, the angle at which the curve is banked, and your speed. While you are in a curve, speed is the one factor you can control.

Suppose you are steering through a sharp curve. Then you suddenly accelerate. Both control systems — steering and acceleration — have to do their work where the tires meet the road. Adding the sudden acceleration can demand too much of those places. You can lose control.

What should you do if this ever happens? Ease up on the accelerator pedal, steer the vehicle the way you want it to go, and slow down.

Speed limit signs near curves warn that you should adjust your speed. Of course, the posted speeds are based on good weather and road conditions. Under less favorable conditions you will want to go slower.

If you need to reduce your speed as you approach a curve, do it before you enter the curve, while your front wheels are straight ahead.

Try to adjust your speed so you can “drive” through the curve. Maintain a reasonable, steady speed. Wait to accelerate until you are out of the curve, and then accelerate gently into the straightaway.

Steering in Emergencies

There are times when steering can be more effective than braking. For example, you come over a hill and find a truck stopped in your lane, or a car suddenly pulls out from nowhere, or a child darts out from between parked cars and stops right in front of you. You can avoid these problems by braking — if you can stop in time. But sometimes you can not; there is not room. That is the time for evasive action — steering around the problem.

Your vehicle can perform very well in emergencies like these. First apply your brakes.

See *Braking on page 4-6*. It is better to remove as much speed as you can from a possible collision. Then steer around the problem, to the left or right depending on the space available.

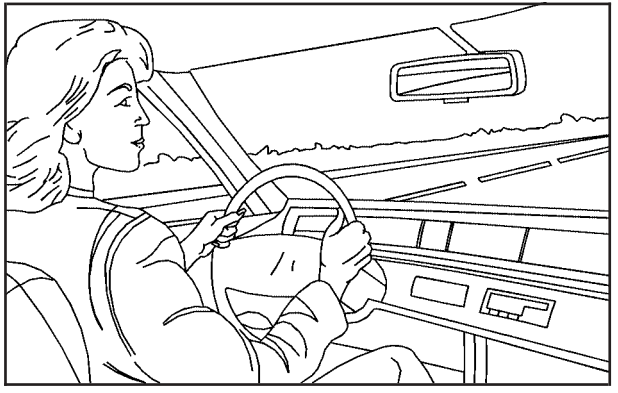

An emergency like this requires close attention and a quick decision. If you are holding the steering wheel at the recommended 9 and 3 o'clock positions, you can turn it a full 180 degrees very quickly without removing either hand. But you have to act fast, steer quickly, and just as quickly straighten the wheel once you have avoided the object.

The fact that such emergency situations are always possible is a good reason to practice defensive driving at all times and wear safety belts properly.

Off-Road Recovery

You may find that your right wheels have dropped off the edge of a road onto the shoulder while you are driving.

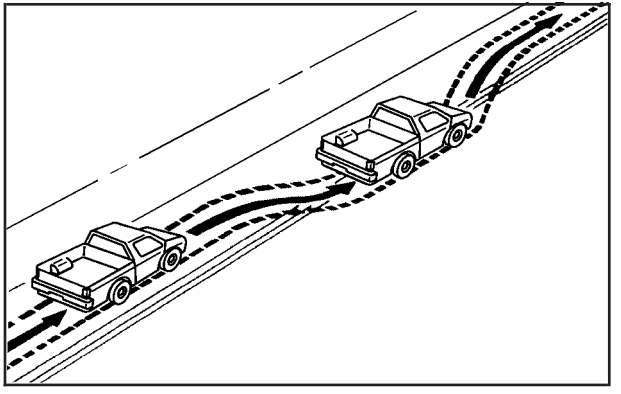

If the level of the shoulder is only slightly below the pavement, recovery should be fairly easy. Ease off the accelerator and then, if there is nothing in the way, steer so that your vehicle straddles the edge of the pavement. You can turn the steering wheel up to one-quarter turn until the right front tire contacts the pavement edge. Then turn your steering wheel to go straight down the roadway.

Passing

The driver of a vehicle about to pass another on a two-lane highway waits for just the right moment, accelerates, moves around the vehicle ahead, then goes back into the right lane again. A simple maneuver?

Not necessarily! Passing another vehicle on a two-lane highway is a potentially dangerous move, since the passing vehicle occupies the same lane as oncoming traffic for several seconds. A miscalculation, an error in judgment, or a brief surrender to frustration or anger can suddenly put the passing driver face to face with the worst of all traffic accidents — the head-on collision.

So here are some tips for passing:

- “Drive ahead.” Look down the road, to the sides and to crossroads for situations that might affect your passing patterns. If you have any doubt whatsoever about making a successful pass, wait for a better time.
- Watch for traffic signs, pavement markings and lines. If you can see a sign up ahead that might indicate a turn or an intersection, delay your pass. A broken center line usually indicates it is all right to pass (providing the road ahead is clear). Never cross a solid line on your side of the lane or a double solid line, even if the road seems empty of approaching traffic.
- Do not get too close to the vehicle you want to pass while you are awaiting an opportunity. For one thing, following too closely reduces your area of vision, especially if you are following a larger vehicle. Also, you will not have adequate space if the vehicle ahead suddenly slows or stops. Keep back a reasonable distance.
- When it looks like a chance to pass is coming up, start to accelerate but stay in the right lane and do not get too close. Time your move so you will be increasing speed as the time comes to move into the other lane. If the way is clear to pass, you will have a “running start” that more than makes up for the distance you would lose by dropping back. And if something happens to cause you to cancel your pass, you need only slow down and drop back again and wait for another opportunity.
- If other vehicles are lined up to pass a slow vehicle, wait your turn. But take care that someone is not trying to pass you as you pull out to pass the slow vehicle. Remember to glance over your shoulder and check the blind spot.

- Check your mirrors, glance over your shoulder, and start your left lane change signal before moving out of the right lane to pass. When you are far enough ahead of the passed vehicle to see its front in your inside mirror, activate your right lane change signal and move back into the right lane. (Remember that your right outside mirror is convex. The vehicle you just passed may seem to be farther away from you than it really is.)
- Try not to pass more than one vehicle at a time on two-lane roads. Reconsider before passing the next vehicle.
- Do not overtake a slowly moving vehicle too rapidly. Even though the brake lamps are not flashing, it may be slowing down or starting to turn.
- If you are being passed, make it easy for the following driver to get ahead of you. Perhaps you can ease a little to the right.

Loss of Control

Let us review what driving experts say about what happens when the three control systems (brakes, steering and acceleration) do not have enough friction where the tires meet the road to do what the driver has asked.

In any emergency, do not give up. Keep trying to steer and constantly seek an escape route or area of less danger.

Skidding

In a skid, a driver can lose control of the vehicle. Defensive drivers avoid most skids by taking reasonable care suited to existing conditions, and by not “overdriving” those conditions. But skids are always possible.

The three types of skids correspond to your vehicle’s three control systems. In the braking skid, your wheels are not rolling. In the steering or cornering skid, too much speed or steering in a curve causes tires to slip and lose cornering force. And in the acceleration skid, too much throttle causes the driving wheels to spin.

A cornering skid is best handled by easing your foot off the accelerator pedal.

If your vehicle starts to slide, ease your foot off the accelerator pedal and quickly steer the way you want the vehicle to go. If you start steering quickly enough, your vehicle may straighten out. Always be ready for a second skid if it occurs.

Of course, traction is reduced when water, snow, ice, gravel or other material is on the road. For safety, you will want to slow down and adjust your driving to these conditions. It is important to slow down on slippery surfaces because stopping distance will be longer and vehicle control more limited.

While driving on a surface with reduced traction, try your best to avoid sudden steering, acceleration or braking (including engine braking by shifting to a lower gear). Any sudden changes could cause the tires to slide. You may not realize the surface is slippery until your vehicle is skidding. Learn to recognize warning clues — such as enough water, ice or packed snow on the road to make a “mirrored surface” — and slow down when you have any doubt.

Remember: Any anti-lock brake system (ABS) helps avoid only the braking skid.

Off-Road Driving with Your Four-Wheel-Drive Vehicle

This off-road guide is for vehicles that have four-wheel drive.

Also, see *Anti-Lock Brakes* under *Braking on page 4-6*.

If your vehicle does not have four-wheel drive, you should not drive off-road unless you are on a level, solid surface.

Off-road driving can be great fun. But it does have some definite hazards. The greatest of these is the terrain itself.

“Off-roading” means you have left the great North American road system behind. Traffic lanes are not marked. Curves are not banked. There are no road signs. Surfaces can be slippery, rough, uphill or downhill. In short, you have gone right back to nature.

Off-road driving involves some new skills. And that is why it is very important that you read this guide. You will find many driving tips and suggestions. These will help make your off-road driving safer and more enjoyable.

Before You Go Off-Roading

There are some things to do before you go out. For example, be sure to have all necessary maintenance and service work done. Check to make sure all underbody shields (if so equipped) are properly attached. Be sure you read all the information about your four-wheel-drive vehicle in this manual. Is there enough fuel? Is the spare tire fully inflated? Are the fluid levels up where they should be? What are the local laws that apply to off-roading where you will be driving? If you do not know, you should check with law enforcement people in the area. Will you be on someone's private land? If so, be sure to get the necessary permission.

Loading Your Vehicle for Off-Road Driving

There are some important things to remember about how to load your vehicle.

- The heaviest things should be on the load floor and forward of your rear axle. Put heavier items as far forward as you can.
- Be sure the load is secured properly, so driving on the off-road terrain does not toss things around.

⚠ CAUTION:

- **Cargo on the load floor piled higher than the seatbacks can be thrown forward during a sudden stop. You or your passengers could be injured. Keep cargo below the top of the seatbacks.**
- **Unsecured cargo on the load floor can be tossed about when driving over rough terrain. You or your passengers can be struck by flying objects. Secure the cargo properly.**
- **Heavy loads on the roof raise the vehicle's center of gravity, making it more likely to roll over. You can be seriously or fatally injured if the vehicle rolls over. Put heavy loads inside the cargo area, not on the roof. Keep cargo in the cargo area as far forward and low as possible.**

You will find other important information in this manual. See *Loading Your Vehicle on page 4-52* and *Tires on page 5-57*.

Environmental Concerns

Off-road driving can provide wholesome and satisfying recreation. However, it also raises environmental concerns. GM recognize these concerns and urge every off-roader to follow these basic rules for protecting the environment:

- Always use established trails, roads and areas that have been specially set aside for public off-road recreational driving; obey all posted regulations.
- Avoid any driving practice that could damage the environment — shrubs, flowers, trees, grasses — or disturb wildlife (this includes wheel-spinning, breaking down trees or unnecessary driving through streams or over soft ground).
- Always carry a litter bag — make sure all refuse is removed from any campsite before leaving.
- Take extreme care with open fires (where permitted), camp stoves and lanterns.
- Never park your vehicle over dry grass or other combustible materials that could catch fire from the heat of the vehicle's exhaust system.

Traveling to Remote Areas

It makes sense to plan your trip, especially when going to a remote area. Know the terrain and plan your route. You are much less likely to get bad surprises. Get accurate maps of trails and terrain. Try to learn of any blocked or closed roads.

It is also a good idea to travel with at least one other vehicle. If something happens to one of them, the other can help quickly.

Does your vehicle have a winch? If so, be sure to read the winch instructions. In a remote area, a winch can be handy if you get stuck. But you will want to know how to use it properly.

Getting Familiar with Off-Road Driving

It is a good idea to practice in an area that is safe and close to home before you go into the wilderness. Off-road driving does require some new and different skills. Here is what we mean.

Tune your senses to different kinds of signals. Your eyes, for example, need to constantly sweep the terrain for unexpected obstacles. Your ears need to listen for unusual tire or engine sounds. With your arms, hands, feet and body, you will need to respond to vibrations and vehicle bounce.

Controlling your vehicle is the key to successful off-road driving. One of the best ways to control your vehicle is to control your speed. Here are some things to keep in mind. At higher speeds:

- you approach things faster and you have less time to scan the terrain for obstacles.
- you have less time to react.
- you have more vehicle bounce when you drive over obstacles.
- you will need more distance for braking, especially since you are on an unpaved surface.

⚠ CAUTION:

When you are driving off-road, bouncing and quick changes in direction can easily throw you out of position. This could cause you to lose control and crash. So, whether you're driving on or off the road, you and your passengers should wear safety belts.

Scanning the Terrain

Off-road driving can take you over many different kinds of terrain. You need to be familiar with the terrain and its many different features. Here are some things to consider.

Surface Conditions: Off-roading can take you over hard-packed dirt, gravel, rocks, grass, sand, mud, snow or ice. Each of these surfaces affects the steering, acceleration and braking of your vehicle in different ways. Depending upon the kind of surface you are on, you may experience slipping, sliding, wheel spinning, delayed acceleration, poor traction and longer braking distances.

Surface Obstacles: Unseen or hidden obstacles can be hazardous. A rock, log, hole, rut or bump can startle you if you are not prepared for them. Often these obstacles are hidden by grass, bushes, snow or even the rise and fall of the terrain itself. Here are some things to consider:

- Is the path ahead clear?
- Will the surface texture change abruptly up ahead?
- Does the travel take you uphill or downhill? (There is more discussion of these subjects later.)
- Will you have to stop suddenly or change direction quickly?

When you drive over obstacles or rough terrain, keep a firm grip on the steering wheel. Ruts, troughs or other surface features can jerk the wheel out of your hands if you are not prepared.

When you drive over bumps, rocks, or other obstacles, your wheels can leave the ground. If this happens, even with one or two wheels, you can not control the vehicle as well or at all.

Because you will be on an unpaved surface, it is especially important to avoid sudden acceleration, sudden turns or sudden braking.

In a way, off-road driving requires a different kind of alertness from driving on paved roads and highways. There are no road signs, posted speed limits or signal lights. You have to use your own good judgment about what is safe and what is not.

Drinking and driving can be very dangerous on any road. And this is certainly true for off-road driving. At the very time you need special alertness and driving skills, your reflexes, perceptions and judgment can be affected by even a small amount of alcohol. You could have a serious — or even fatal — accident if you drink and drive or ride with a driver who has been drinking. See *Drunken Driving on page 4-3*.

Driving on Off-Road Hills

Off-road driving often takes you up, down or across a hill. Driving safely on hills requires good judgment and an understanding of what your vehicle can and can not do. There are some hills that simply can not be driven, no matter how well built the vehicle.

⚠ CAUTION:

Many hills are simply too steep for any vehicle. If you drive up them, you will stall. If you drive down them, you can not control your speed. If you drive across them, you will roll over. You could be seriously injured or killed. If you have any doubt about the steepness, do not drive the hill.

Approaching a Hill

When you approach a hill, you need to decide if it is one of those hills that is just too steep to climb, descend or cross. Steepness can be hard to judge. On a very small hill, for example, there may be a smooth, constant incline with only a small change in elevation where you can easily see all the way to the top. On a large hill, the incline may get steeper as you near the top, but you may not see this because the crest of the hill is hidden by bushes, grass or shrubs.

Here are some other things to consider as you approach a hill.

- Is there a constant incline, or does the hill get sharply steeper in places?
- Is there good traction on the hillside, or will the surface cause tire slipping?
- Is there a straight path up or down the hill so you will not have to make turning maneuvers?
- Are there obstructions on the hill that can block your path (boulders, trees, logs or ruts)?
- What is beyond the hill? Is there a cliff, an embankment, a drop-off, a fence? Get out and walk the hill if you do not know. It is the smart way to find out.
- Is the hill simply too rough? Steep hills often have ruts, gullies, troughs and exposed rocks because they are more susceptible to the effects of erosion.

Driving Uphill

Once you decide you can safely drive up the hill, you need to take some special steps.

- Use a low gear and get a firm grip on the steering wheel.
- Get a smooth start up the hill and try to maintain your speed. Do not use more power than you need, because you do not want your wheels to start spinning or sliding.
- Try to drive straight up the hill if at all possible. If the path twists and turns, you might want to find another route.

⚠ CAUTION:

Turning or driving across steep hills can be dangerous. You could lose traction, slide sideways, and possibly roll over. You could be seriously injured or killed. When driving up hills, always try to go straight up.

- Ease up on your speed as you approach the top of the hill.
- Attach a flag to the vehicle to make you more visible to approaching traffic on trails or hills.
- Sound the horn as you approach the top of the hill to let opposing traffic know you are there.
- Use your headlamps even during the day. They make you more visible to oncoming traffic.

⚠ CAUTION:

Driving to the top (crest) of a hill at full speed can cause an accident. There could be a drop-off, embankment, cliff, or even another vehicle. You could be seriously injured or killed. As you near the top of a hill, slow down and stay alert.

Q: What should I do if my vehicle stalls, or is about to stall, and I can not make it up the hill?

A: If this happens, there are some things you should do, and there are some things you must not do. First, here is what you *should* do:

- Push the brake pedal to stop the vehicle and keep it from rolling backwards. Also, apply the parking brake.
- If your engine is still running, shift the transmission to REVERSE (R), release the parking brake, and slowly back down the hill in REVERSE (R).
- If your engine has stopped running, you will need to restart it. With the brake pedal pressed and the parking brake still applied, shift the transmission to PARK (P) (or shift to neutral if your vehicle has a manual transmission) and restart the engine. Then, shift to REVERSE (R), release the parking brake, and slowly back down the hill as straight as possible in REVERSE (R).
- As you are backing down the hill, put your left hand on the steering wheel at the 12 o'clock position. This way, you will be able to tell if your wheels are straight and maneuver as you back down. It is best that you back down the hill with your wheels straight rather than in the left or right direction. Turning the wheel too far to the left or right will increase the possibility of a rollover.

Here are some things you *must not* do if you stall, or are about to stall, when going up a hill.

- Never attempt to prevent a stall by shifting into NEUTRAL (N) (or pressing the clutch, if you have a manual transmission) to "rev-up" the engine and regain forward momentum. This will not work. Your vehicle will roll backwards very quickly and you could go out of control.

  Instead, apply the regular brake to stop the vehicle. Then apply the parking brake. Shift to REVERSE (R), release the parking brake, and slowly back straight down.
- Never attempt to turn around if you are about to stall when going up a hill. If the hill is steep enough to stall your vehicle, it is steep enough to cause you to roll over if you turn around. If you can not make it up the hill, you must back straight down the hill.

Q: Suppose, after stalling, I try to back down the hill and decide I just can not do it. What should I do?

A: Set the parking brake, put your transmission in PARK (P) (or the manual transmission in FIRST (1)) and turn off the engine. Leave the vehicle and go get some help. Exit on the uphill side and stay clear of the path the vehicle would take if it rolled downhill.

Driving Downhill

When off-roading takes you downhill, you will want to consider a number of things:

- How steep is the downhill? Will I be able to maintain vehicle control?
- What is the surface like? Smooth? Rough? Slippery? Hard-packed dirt? Gravel?
- Are there hidden surface obstacles? Ruts? Logs? Boulders?
- What is at the bottom of the hill? Is there a hidden creek bank or even a river bottom with large rocks?

If you decide you can go down a hill safely, then try to keep your vehicle headed straight down, and use a low gear. This way, engine drag can help your brakes and they will not have to do all the work. Descend slowly, keeping your vehicle under control at all times.

⚠ CAUTION:

Heavy braking when going down a hill can cause your brakes to overheat and fade. This could cause loss of control and a serious accident. Apply the brakes lightly when descending a hill and use a low gear to keep vehicle speed under control.

Q: Are there some things I should not do when driving down a hill?

A: Yes! These are important because if you ignore them you could lose control and have a serious accident.

- When driving downhill, avoid turns that take you across the incline of the hill. A hill that is not too steep to drive down may be too steep to drive across. You could roll over if you do not drive straight down.
- Never go downhill with the transmission in NEUTRAL (N), or with the clutch pedal pressed down with a manual transmission. This is called “free-wheeling.” Your brakes will have to do all the work and could overheat and fade.

Q: Am I likely to stall when going downhill?

A: It is much more likely to happen going uphill. But if it happens going downhill, here is what to do.

- Stop your vehicle by applying the regular brakes. Apply the parking brake.
- Shift to PARK (P) (or to neutral with the manual transmission) and, while still braking, restart the engine.
- Shift back to a low gear, release the parking brake, and drive straight down.
- If the engine will not start, get out and get help.

Driving Across an Incline

Sooner or later, an off-road trail will probably go across the incline of a hill. If this happens, you have to decide whether to try to drive across the incline. Here are some things to consider:

- A hill that can be driven straight up or down may be too steep to drive across. When you go straight up or down a hill, the length of the wheel base (the distance from the front wheels to the rear wheels) reduces the likelihood the vehicle will tumble end over end. But when you drive across an incline, the much more narrow track width (the distance between the left and right wheels) may not prevent the vehicle from tilting and rolling over. Also, driving across an incline puts more weight on the downhill wheels. This could cause a downhill slide or a rollover.
- Surface conditions can be a problem when you drive across a hill. Loose gravel, muddy spots, or even wet grass can cause your tires to slip sideways, downhill. If the vehicle slips sideways, it can hit something that will trip it (a rock, a rut, etc.) and roll over.

- Hidden obstacles can make the steepness of the incline even worse. If you drive across a rock with the uphill wheels, or if the downhill wheels drop into a rut or depression, your vehicle can tilt even more.

For reasons like these, you need to decide carefully whether to try to drive across an incline. Just because the trail goes across the incline does not mean you have to drive it. The last vehicle to try it might have rolled over.

⚠ CAUTION:

Driving across an incline that is too steep will make your vehicle roll over. You could be seriously injured or killed. If you have any doubt about the steepness of the incline, do not drive across it. Find another route instead.

Q: What if I am driving across an incline that is not too steep, but I hit some loose gravel and start to slide downhill. What should I do?

A: If you feel your vehicle starting to slide sideways, turn downhill. This should help straighten out the vehicle and prevent the side slipping. However, a much better way to prevent this is to get out and “walk the course” so you know what the surface is like before you drive it.

Stalling on an Incline

If your vehicle stalls when you are crossing an incline, be sure you (and your passengers) get out on the uphill side, even if the door there is harder to open. If you get out on the downhill side and the vehicle starts to roll over, you will be right in its path.

If you have to walk down the slope, stay out of the path the vehicle will take if it does roll over.

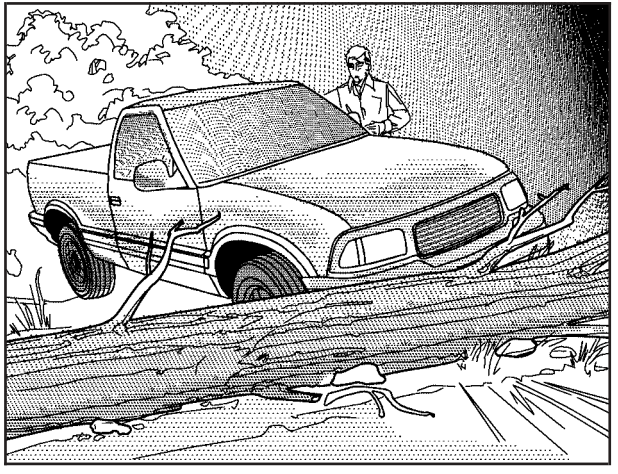

⚠ CAUTION:

Getting out on the downhill (low) side of a vehicle stopped across an incline is dangerous. If the vehicle rolls over, you could be crushed or killed. Always get out on the uphill (high) side of the vehicle and stay well clear of the rollover path.

Driving in Mud, Sand, Snow or Ice

When you drive in mud, snow or sand, your wheels will not get good traction. You can not accelerate as quickly, turning is more difficult, and you will need longer braking distances.

It is best to use a low gear when you are in mud — the deeper the mud, the lower the gear. In really deep mud, the idea is to keep your vehicle moving so you do not get stuck.

When you drive on sand, you will sense a change in wheel traction. But it will depend upon how loosely packed the sand is. On loosely packed sand (as on beaches or sand dunes) your tires will tend to sink into the sand. This has an effect on steering, accelerating and braking. Drive at a reduced speed and avoid sharp turns or abrupt maneuvers.

Hard packed snow and ice offer the worst tire traction. On these surfaces, it is very easy to lose control. On wet ice, for example, the traction is so poor that you will have difficulty accelerating. And if you do get moving, poor steering and difficult braking can cause you to slide out of control.

⚠ CAUTION:

Driving on frozen lakes, ponds or rivers can be dangerous. Underwater springs, currents under the ice, or sudden thaws can weaken the ice. Your vehicle could fall through the ice and you and your passengers could drown. Drive your vehicle on safe surfaces only.

Driving in Water

Heavy rain can mean flash flooding, and flood waters demand extreme caution.

Find out how deep the water is before you drive through it. If it is deep enough to cover your wheel hubs, axles or exhaust pipe, do not try it — you probably will not get through. Also, water that deep can damage your axle and other vehicle parts.

If the water is not too deep, drive slowly through it. At faster speeds, water splashes on your ignition system and your vehicle can stall. Stalling can also occur if you get your tailpipe under water. And, as long as your tailpipe is under water, you will never be able to start your engine. When you go through water, remember that when your brakes get wet, it may take you longer to stop.

⚠ CAUTION:

Driving through rushing water can be dangerous. Deep water can sweep your vehicle downstream and you and your passengers could drown. If it is only shallow water, it can still wash away the ground from under your tires, and you could lose traction and roll the vehicle over. Do not drive through rushing water.

See *Driving in Rain and on Wet Roads on page 4-31* for more information on driving through water.

After Off-Road Driving

Remove any brush or debris that has collected on the underbody, chassis or under the hood. These accumulations can be a fire hazard.

After operation in mud or sand, have the brake linings cleaned and checked. These substances can cause glazing and uneven braking. Check the body structure, steering, suspension, wheels, tires and exhaust system for damage. Also, check the fuel lines and cooling system for any leakage.

Your vehicle will require more frequent service due to off-road use. Refer to the maintenance schedule for additional information.

Driving at Night

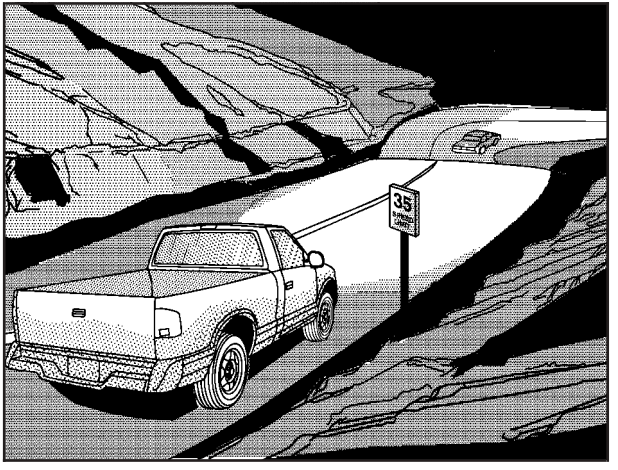

Night driving is more dangerous than day driving. One reason is that some drivers are likely to be impaired — by alcohol or drugs, with night vision problems, or by fatigue.

Here are some tips on night driving.

- Drive defensively.
- Do not drink and drive.
- Adjust your inside rearview mirror to reduce the glare from headlamps behind you.
- Since you can not see as well, you may need to slow down and keep more space between you and other vehicles.
- Slow down, especially on higher speed roads. Your headlamps can light up only so much road ahead.
- In remote areas, watch for animals.
- If you are tired, pull off the road in a safe place and rest.

No one can see as well at night as in the daytime. But as we get older these differences increase. A 50-year-old driver may require at least twice as much light to see the same thing at night as a 20-year-old.

What you do in the daytime can also affect your night vision. For example, if you spend the day in bright sunshine you are wise to wear sunglasses. Your eyes will have less trouble adjusting to night. But if you are driving, do not wear sunglasses at night. They may cut down on glare from headlamps, but they also make a lot of things invisible.

You can be temporarily blinded by approaching headlamps. It can take a second or two, or even several seconds, for your eyes to re-adjust to the dark. When you are faced with severe glare (as from a driver who does not lower the high beams, or a vehicle with misaimed headlamps), slow down a little. Avoid staring directly into the approaching headlamps.

Keep your windshield and all the glass on your vehicle clean — inside and out. Glare at night is made much worse by dirt on the glass. Even the inside of the glass can build up a film caused by dust. Dirty glass makes lights dazzle and flash more than clean glass would, making the pupils of your eyes contract repeatedly.

Remember that your headlamps light up far less of a roadway when you are in a turn or curve. Keep your eyes moving; that way, it is easier to pick out dimly lighted objects. Just as your headlamps should be checked regularly for proper aim, so should your eyes be examined regularly. Some drivers suffer from night blindness — the inability to see in dim light — and are not even aware of it.

Driving in Rain and on Wet Roads

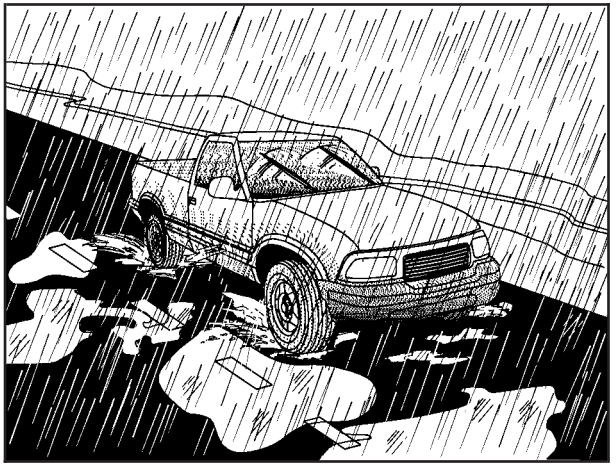

Rain and wet roads can mean driving trouble. On a wet road, you can not stop, accelerate or turn as well because your tire-to-road traction is not as good as on dry roads.

And, if your tires do not have much tread left, you will get even less traction. It is always wise to go slower and be cautious if rain starts to fall while you are driving. The surface may get wet suddenly when your reflexes are tuned for driving on dry pavement.

The heavier the rain, the harder it is to see. Even if your windshield wiper blades are in good shape, a heavy rain can make it harder to see road signs and traffic signals, pavement markings, the edge of the road and even people walking.

It is wise to keep your wiping equipment in good shape and keep your windshield washer tank filled with washer fluid. Replace your windshield wiper inserts when they show signs of streaking or missing areas on the windshield, or when strips of rubber start to separate from the inserts.

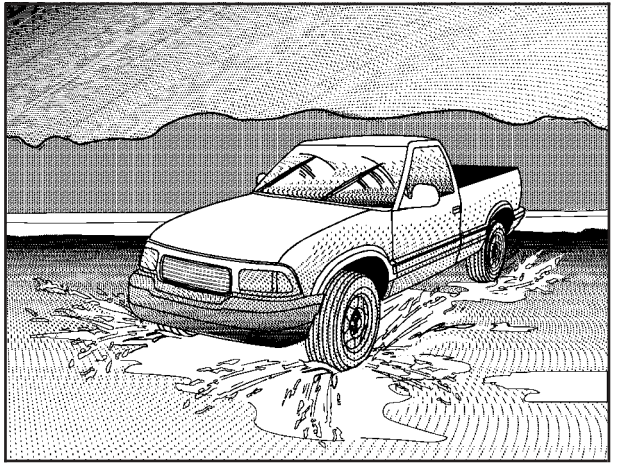

Driving too fast through large water puddles or even going through some car washes can cause problems, too. The water may affect your brakes. Try to avoid puddles. But if you can not, try to slow down before you hit them.

⚠ CAUTION:

Wet brakes can cause accidents. They will not work as well in a quick stop and may cause pulling to one side. You could lose control of the vehicle.

After driving through a large puddle of water or a car wash, apply your brake pedal lightly until your brakes work normally.

Hydroplaning

Hydroplaning is dangerous. So much water can build up under your tires that they can actually ride on the water. This can happen if the road is wet enough and you are going fast enough. When your vehicle is hydroplaning, it has little or no contact with the road.

Hydroplaning does not happen often. But it can if your tires do not have much tread or if the pressure in one or more is low. It can happen if a lot of water is standing on the road. If you can see reflections from trees, telephone poles or other vehicles, and raindrops “dimple” the water’s surface, there could be hydroplaning.

Hydroplaning usually happens at higher speeds. There just is not a hard and fast rule about hydroplaning. The best advice is to slow down when it is raining.

Driving Through Deep Standing Water

Notice: **If you drive too quickly through deep puddles or standing water, water can come in through your engine’s air intake and badly damage your engine. Never drive through water that is slightly lower than the underbody of your vehicle. If you can not avoid deep puddles or standing water, drive through them very slowly.**

Driving Through Flowing Water

⚠ CAUTION:

Flowing or rushing water creates strong forces. If you try to drive through flowing water, as you might at a low water crossing, your vehicle can be carried away. As little as six inches of flowing water can carry away a smaller vehicle. If this happens, you and other vehicle occupants could drown. Do not ignore police warning signs, and otherwise be very cautious about trying to drive through flowing water.

Some Other Rainy Weather Tips

- Besides slowing down, allow some extra following distance. And be especially careful when you pass another vehicle. Allow yourself more clear room ahead, and be prepared to have your view restricted by road spray.
- Have good tires with proper tread depth. See *Tires on page 5-57*.

City Driving

One of the biggest problems with city streets is the amount of traffic on them. You will want to watch out for what the other drivers are doing and pay attention to traffic signals.

Here are ways to increase your safety in city driving:

- Know the best way to get to where you are going. Get a city map and plan your trip into an unknown part of the city just as you would for a cross-country trip.
- Try to use the freeways that rim and crisscross most large cities. You will save time and energy. See *Freeway Driving on page 4-35*.
- Treat a green light as a warning signal. A traffic light is there because the corner is busy enough to need it. When a light turns green, and just before you start to move, check both ways for vehicles that have not cleared the intersection or may be running the red light.

Freeway Driving

Mile for mile, freeways (also called thruways, parkways, expressways, turnpikes or superhighways) are the safest of all roads. But they have their own special rules.

The most important advice on freeway driving is: Keep up with traffic and keep to the right. Drive at the same speed most of the other drivers are driving. Too-fast or too-slow driving breaks a smooth traffic flow. Treat the left lane on a freeway as a passing lane.

At the entrance, there is usually a ramp that leads to the freeway. If you have a clear view of the freeway as you drive along the entrance ramp, you should begin to check traffic. Try to determine where you expect to blend with the flow. Try to merge into the gap at close to the prevailing speed. Switch on your turn signal, check your mirrors and glance over your shoulder as often as necessary. Try to blend smoothly with the traffic flow.

Once you are on the freeway, adjust your speed to the posted limit or to the prevailing rate if it is slower. Stay in the right lane unless you want to pass.

Before changing lanes, check your mirrors. Then use your turn signal.

Just before you leave the lane, glance quickly over your shoulder to make sure there is not another vehicle in your “blind” spot.

Once you are moving on the freeway, make certain you allow a reasonable following distance. Expect to move slightly slower at night.

When you want to leave the freeway, move to the proper lane well in advance. If you miss your exit, do not, under any circumstances, stop and back up. Drive on to the next exit.

The exit ramp can be curved, sometimes quite sharply. The exit speed is usually posted.

Reduce your speed according to your speedometer, not to your sense of motion. After driving for any distance at higher speeds, you may tend to think you are going slower than you actually are.

Before Leaving on a Long Trip

Make sure you are ready. Try to be well rested. If you must start when you are not fresh — such as after a day's work — do not plan to make too many miles that first part of the journey. Wear comfortable clothing and shoes you can easily drive in.

Is your vehicle ready for a long trip? If you keep it serviced and maintained, it is ready to go. If it needs service, have it done before starting out. Of course, you will find experienced and able service experts in GM dealerships all across North America. They will be ready and willing to help if you need it.

Here are some things you can check before a trip:

- *Windshield Washer Fluid:* Is the reservoir full? Are all windows clean inside and outside?
- *Wiper Blades:* Are they in good shape?
- *Fuel, Engine Oil, Other Fluids:* Have you checked all levels?
- *Lamps:* Are they all working? Are the lenses clean?
- *Tires:* They are vitally important to a safe, trouble-free trip. Is the tread good enough for long-distance driving? Are the tires all inflated to the recommended pressure?
- *Weather Forecasts:* What is the weather outlook along your route? Should you delay your trip a short time to avoid a major storm system?
- *Maps:* Do you have up-to-date maps?

Highway Hypnosis

Is there actually such a condition as “highway hypnosis”? Or is it just plain falling asleep at the wheel? Call it highway hypnosis, lack of awareness, or whatever.

There is something about an easy stretch of road with the same scenery, along with the hum of the tires on the road, the drone of the engine, and the rush of the wind against the vehicle that can make you sleepy. Do not let it happen to you! If it does, your vehicle can leave the road in *less than a second,* and you could crash and be injured.

What can you do about highway hypnosis?
First, be aware that it can happen.

Then here are some tips:

- Make sure your vehicle is well ventilated, with a comfortably cool interior.
- Keep your eyes moving. Scan the road ahead and to the sides. Check your mirrors and your instruments frequently.
- If you get sleepy, pull off the road into a rest, service or parking area and take a nap, get some exercise, or both. For safety, treat drowsiness on the highway as an emergency.

Hill and Mountain Roads

Driving on steep hills or mountains is different from driving in flat or rolling terrain.

If you drive regularly in steep country, or if you are planning to visit there, here are some tips that can make your trips safer and more enjoyable. See *Off-Road Driving with Your Four-Wheel-Drive Vehicle on page 4-15* for information about driving off-road.

- Keep your vehicle in good shape. Check all fluid levels and also the brakes, tires, cooling system and transmission. These parts can work hard on mountain roads.
- Know how to go down hills. The most important thing to know is this: let your engine do some of the slowing down. Shift to a lower gear when you go down a steep or long hill.

⚠ CAUTION:

If you do not shift down, your brakes could get so hot that they would not work well. You would then have poor braking or even none going down a hill. You could crash. Shift down to let your engine assist your brakes on a steep downhill slope.

⚠ CAUTION:

Coasting downhill in NEUTRAL (N) or with the ignition off is dangerous. Your brakes will have to do all the work of slowing down. They could get so hot that they would not work well. You would then have poor braking or even none going down a hill. You could crash. Always have your engine running and your vehicle in gear when you go downhill.

- Know how to go uphill. You may want to shift down to a lower gear. The lower gears help cool your engine and transmission, and you can climb the hill better.
- Stay in your own lane when driving on two-lane roads in hills or mountains. Do not swing wide or cut across the center of the road. Drive at speeds that let you stay in your own lane.
- As you go over the top of a hill, be alert. There could be something in your lane, like a stalled car or an accident.
- You may see highway signs on mountains that warn of special problems. Examples are long grades, passing or no-passing zones, a falling rocks area or winding roads. Be alert to these and take appropriate action.

Winter Driving

Here are some tips for winter driving:

- Have your vehicle in good shape for winter.
- You may want to put winter emergency supplies in your vehicle.

Also see *Tires on page 5-57*.

Include an ice scraper, a small brush or broom, a supply of windshield washer fluid, a rag, some winter outer clothing, a small shovel, a flashlight, a red cloth and a couple of reflective warning triangles. And, if you will be driving under severe conditions, include a small bag of sand, a piece of old carpet or a couple of burlap bags to help provide traction. Be sure you properly secure these items in your vehicle.

Driving on Snow or Ice

Most of the time, those places where your tires meet the road probably have good traction.

However, if there is snow or ice between your tires and the road, you can have a very slippery situation. You will have a lot less traction or “grip” and will need to be very careful.

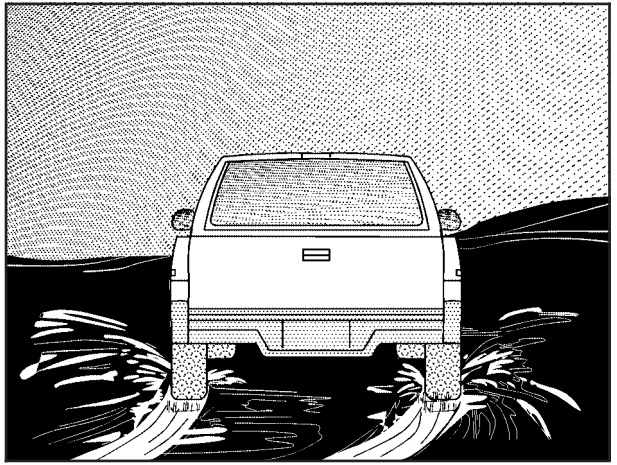

What is the worst time for this? “Wet ice.” Very cold snow or ice can be slick and hard to drive on. But wet ice can be even more trouble because it may offer the least traction of all. You can get wet ice when it is about freezing (32°F; 0°C) and freezing rain begins to fall. Try to avoid driving on wet ice until salt and sand crews can get there.

Whatever the condition — smooth ice, packed, blowing or loose snow — drive with caution.

Accelerate gently. Try not to break the fragile traction. If you accelerate too fast, the drive wheels will spin and polish the surface under the tires even more.

Your anti-lock brakes improve your vehicle’s stability when you make a hard stop on a slippery road. Even though you have an anti-lock braking system, you will want to begin stopping sooner than you would on dry pavement. See *Braking on page 4-6*.

- Allow greater following distance on any slippery road.
- Watch for slippery spots. The road might be fine until you hit a spot that is covered with ice. On an otherwise clear road, ice patches may appear in shaded areas where the sun can not reach: around clumps of trees, behind buildings or under bridges. Sometimes the surface of a curve or an overpass may remain icy when the surrounding roads are clear. If you see a patch of ice ahead of you, brake before you are on it. Try not to brake while you are actually on the ice, and avoid sudden steering maneuvers.

If You Are Caught in a Blizzard

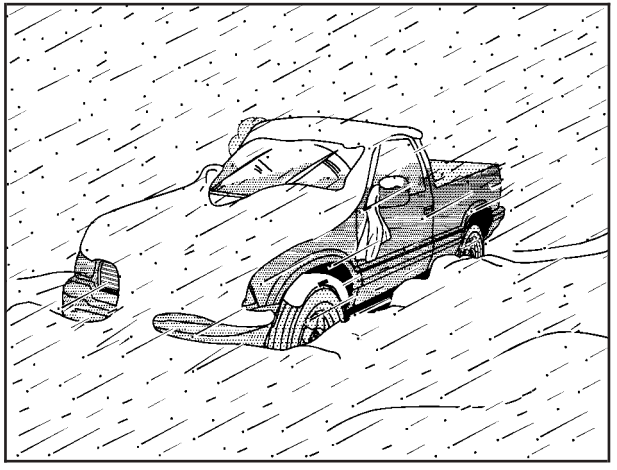

If you are stopped by heavy snow, you could be in a serious situation. You should probably stay with your vehicle unless you know for sure that you are near help and you can hike through the snow. Here are some things to do to summon help and keep yourself and your passengers safe:

- Turn on your hazard flashers.
- Tie a red cloth to your vehicle to alert police that you have been stopped by the snow.
- Put on extra clothing or wrap a blanket around you. If you have no blankets or extra clothing, make body insulators from newspapers, burlap bags, rags, floor mats — anything you can wrap around yourself or tuck under your clothing to keep warm.

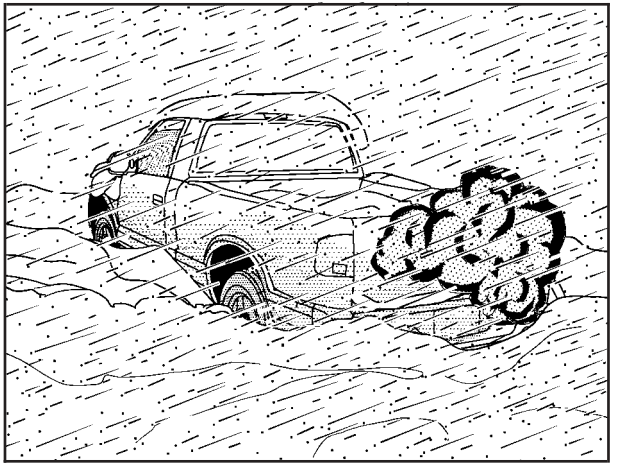

You can run the engine to keep warm, but be careful.

⚠ CAUTION:

Snow can trap exhaust gases under your vehicle. This can cause deadly CO (carbon monoxide) gas to get inside. CO could overcome you and kill you. You can not see it or smell it, so you might not know it is in your vehicle. Clear away snow from around the base of your vehicle, especially any that is blocking your exhaust pipe. And check around again from time to time to be sure snow does not collect there.

Open a window just a little on the side of the vehicle that is away from the wind. This will help keep CO out.

Run your engine only as long as you must. This saves fuel. When you run the engine, make it go a little faster than just idle. That is, push the accelerator slightly. This uses less fuel for the heat that you get and it keeps the battery charged. You will need a well-charged battery to restart the vehicle, and possibly for signaling later on with your headlamps. Let the heater run for a while.

Then, shut the engine off and close the window almost all the way to preserve the heat. Start the engine again and repeat this only when you feel really uncomfortable from the cold. But do it as little as possible. Preserve the fuel as long as you can.
To help keep warm, you can get out of the vehicle and do some fairly vigorous exercises every half hour or so until help comes.

If You Are Stuck: In Sand, Mud, Ice or Snow

In order to free your vehicle when it is stuck, you will need to spin the wheels, but you do not want to spin your wheels too fast. The method known as “rocking” can help you get out when you are stuck, but you must use caution.

⚠ CAUTION:

If you let your tires spin at high speed, they can explode, and you or others could be injured. And, the vehicle can overheat.

CAUTION: (Continued)

CAUTION: (Continued)

That could cause an engine compartment fire or other damage. When you are stuck, spin the wheels as little as possible. Do not spin the wheels above 35 mph (55 km/h) as shown on the speedometer.

Notice: **Spinning your wheels can destroy parts of your vehicle as well as the tires. If you spin the wheels too fast while shifting your transmission back and forth, you can destroy your transmission.**

For information about using tire chains on your vehicle, see *Tire Chains on page 5-72*.

Rocking Your Vehicle To Get It Out

First, turn your steering wheel left and right. That will clear the area around your front wheels. If you have a four-wheel-drive vehicle, shift into 4HI. If you have traction control, turn the traction control system off. See *Traction Control System (TCS) on page 4-9*.
Then shift back and forth between REVERSE (R) and a forward gear (or with a manual transmission, between FIRST (1) or SECOND (2) and REVERSE (R)), spinning the wheels as little as possible. Release the accelerator pedal while you shift, and press lightly on the accelerator pedal when the transmission is in gear.
By slowly spinning your wheels in the forward and reverse directions, you will cause a rocking motion that may free your vehicle. If that does not get you out after a few tries, you may need to be towed out.
Or, you can use your recovery hooks if your vehicle has them. If you do need to be towed out, see *Towing Your Vehicle on page 4-47*.

Using the Recovery Hooks

Your vehicle may be equipped with recovery hooks. The hooks are provided at the front of your vehicle. You may need to use them if you are stuck off-road and need to be pulled to some place where you can continue driving.

⚠ CAUTION:

These hooks, when used, are under a lot of force. Always pull the vehicle straight out. Never pull on the hooks at a sideways angle. The hooks could break off and you or others could be injured from the chain or cable snapping back.

Notice: **Never use recovery hooks to tow the vehicle. Your vehicle could be damaged and it would not be covered by warranty.**

Towing

Towing Your Vehicle

Consult your dealer or a professional towing service if you need to have your disabled vehicle towed. See *Roadside Assistance Program on page 7-6*.

If you want to tow your vehicle behind another vehicle for recreational purposes (such as behind a motorhome), see “Recreational Vehicle Towing” following.

Recreational Vehicle Towing

Recreational vehicle towing means towing your vehicle behind another vehicle — such as behind a motorhome. The two most common types of recreational vehicle towing are known as “dinghy (towing your vehicle with all four wheels on the ground) and “dolly (towing your vehicle with two wheels on the ground and two wheels up on a device known as a “dolly”).

With the proper preparation and equipment, many vehicles can be towed in these ways. See “Dinghy Towing” and “Dolly Towing” following.

Here are some important things to consider before you do recreational vehicle towing:

- What’s the towing capacity of the towing vehicle? Be sure you read the tow vehicle manufacturer’s recommendations.
- How far will you tow? Some vehicles have restrictions on how far and how long they can tow.
- Do you have the proper towing equipment? See your dealer or trailering professional for additional advice and equipment recommendations.
- Is your vehicle ready to be towed? Just as you would prepare your vehicle for a long trip, you’ll want to make sure your vehicle is prepared to be towed.

Dinghy Towing

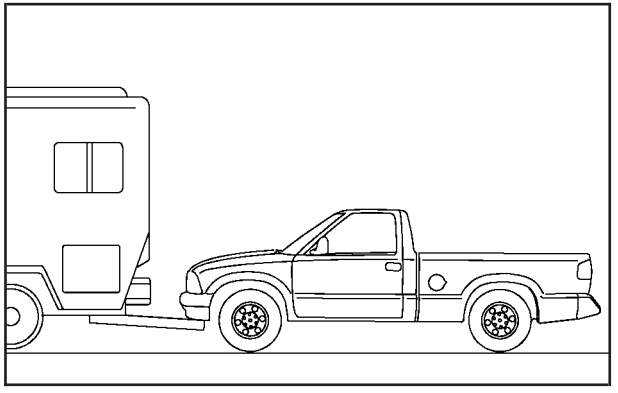

Two-Wheel Drive Vehicles

Notice: **If you tow your vehicle with all four wheels on the ground, the drivetrain components could be damaged. The repairs would not be covered by your warranty. Do not tow your vehicle with all four wheels on the ground.**

Two-wheel-drive vehicles should not be towed with all four wheels on the ground. Two-wheel-drive transmissions have no provisions for internal lubrication while being towed.

Four-Wheel Drive Vehicles

Use the following steps to tow your vehicle with all four wheels on the ground:

1. Drive the vehicle to be towed into position behind the tow vehicle.
2. Firmly set the parking brake. See *Parking Brake on page 2-29* for more information.
3. Put an automatic transmission in PARK (P) or a manual transmission in FIRST (1).
4. Securely attach the vehicle being towed to the tow vehicle.

⚠ CAUTION:

Shifting a four-wheel-drive vehicle's transfer case into NEUTRAL can cause your vehicle to roll even if the transmission is in Park (P) for an automatic transmission, or if your vehicle is in gear, for a manual transmission. You or others could be injured. Make sure the parking brake is firmly set before you shift the transfer case to NEUTRAL.

5. Shift the transfer case to NEUTRAL. See *Four-Wheel Drive on page 2-26* for more information.
6. Release the parking brake only after the vehicle being towed is firmly attached to the towing vehicle.

Notice: **If you exceed 55 mph (90 km/h) while towing your vehicle, it could be damaged. Never exceed 55 mph (90 km/h) while towing your vehicle.**

7. Turn the ignition to LOCK. To prevent your battery from draining while towing, remove the RDO BATT and CLSTR fuses from the instrument panel fuse block. Be sure to replace the fuse when you reach your destination. See *Fuses and Circuit Breakers on page 5-104* for more information.

After towing see “Shifting out of NEUTRAL” under *Four-Wheel Drive on page 2-26*.

Dolly Towing

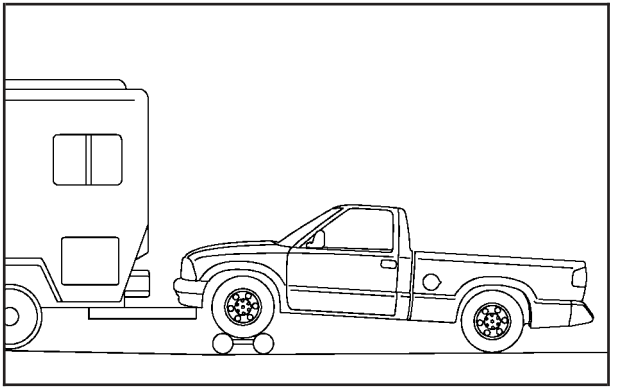

Two-Wheel-Drive Vehicles

Two-wheel drive vehicles should not be towed with the rear wheels on the ground. Two-wheel drive transmissions have no provisions for internal lubrication while being towed.

Four-Wheel-Drive Vehicles

Front Towing (Front Wheels Off the Ground)

Use the following steps to dolly tow your vehicle from the front:

1. Drive the vehicle up onto the dolly.
2. Firmly set the parking brake. See *Parking Brake on page 2-29* for more information.
3. Follow the dolly manufacturer's instructions to attach and secure the vehicle being towed to the dolly and then the loaded dolly to the tow vehicle.
4. Put an automatic transmission in PARK (P) or a manual transmission in FIRST (1).

⚠ CAUTION:

Shifting a four-wheel-drive vehicle's transfer case into NEUTRAL can cause your vehicle to roll even if the transmission is in Park (P) for

CAUTION: (Continued)

CAUTION: (Continued)

an automatic transmission, or if your vehicle is in gear, for a manual transmission. You or others could be injured. Make sure the parking brake is firmly set before you shift the transfer case to NEUTRAL.

5. Shift the transfer case to NEUTRAL. See *Four-Wheel Drive on page 2-26* for instructions.
6. Release the parking brake only after the vehicle being towed is firmly attached to the towing vehicle.

Notice: **If you exceed 55 mph (90 km/h) while towing your vehicle, it could be damaged. Never exceed 55 mph (90 km/h) while towing your vehicle.**

7. Turn the ignition to LOCK. To prevent your battery from draining while towing, remove the RDO BATT and CLSTR fuses from the instrument panel fuse block. Be sure to replace the fuse when you reach your destination See *Fuses and Circuit Breakers on page 5-104* for more information.

Rear Towing (Rear Wheels Off the Ground)

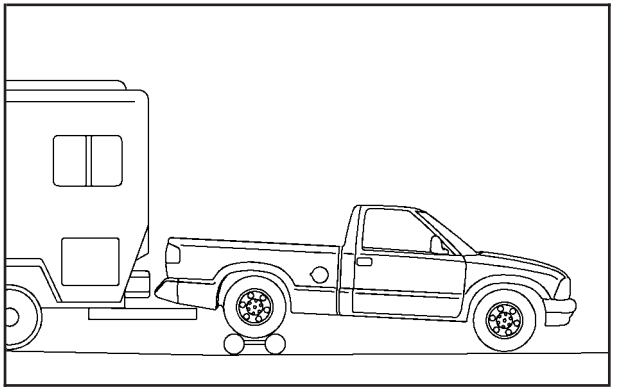

Four-Wheel-Drive Vehicles

Use the following steps to dolly tow your vehicle from the rear:

1. Drive the vehicle up onto the dolly.
2. Follow the dolly manufacturer's instructions to attach and secure the vehicle being towed to the dolly and then the loaded dolly to the tow vehicle.
3. Firmly set the parking brake. See *Parking Brake on page 2-29* for more information.
4. Put an automatic transmission in PARK (P) or a manual transmission in FIRST (1).

⚠ CAUTION:

Shifting a four-wheel-drive vehicle's transfer case into NEUTRAL can cause your vehicle to roll even if the transmission is in Park (P) for an automatic transmission, or if your vehicle is in gear, for a manual transmission. You or others could be injured. Make sure the parking brake is firmly set before you shift the transfer case to NEUTRAL.

5. Shift the transfer case to 2HI. See *Four-Wheel Drive on page 2-26* for instructions.

6. Release the parking brake only after the vehicle being towed is firmly attached to the towing vehicle.

Notice: **If you exceed 55 mph (90 km/h) while towing your vehicle, it could be damaged. Never exceed 55 mph (90 km/h) while towing your vehicle.**

7. Turn the ignition to LOCK. To prevent your battery from draining while towing, remove the RDO BATT and CLSTR fuses from the instrument panel fuse block. Be sure to replace the fuse when you reach your destination See *Fuses and Circuit Breakers on page 5-104* for more information.

After towing see “Shifting out of NEUTRAL” under *Four-Wheel Drive on page 2-26*.

Loading Your Vehicle

It is very important to know how much weight your vehicle can carry. This weight is called the vehicle capacity weight and includes the weight of all occupants, cargo and all nonfactory-installed options. Two labels on your vehicle show how much weight it may properly carry, the Tire and Loading Information label and the Certification/Tire label.

⚠ CAUTION:

Do not load your vehicle any heavier than the GVWR, or either the maximum front or rear GAWR. If you do, parts on your vehicle can break, and it can change the way your vehicle handles. These could cause you to lose control and crash. Also, overloading can shorten the life of your vehicle.

Tire and Loading Information Label

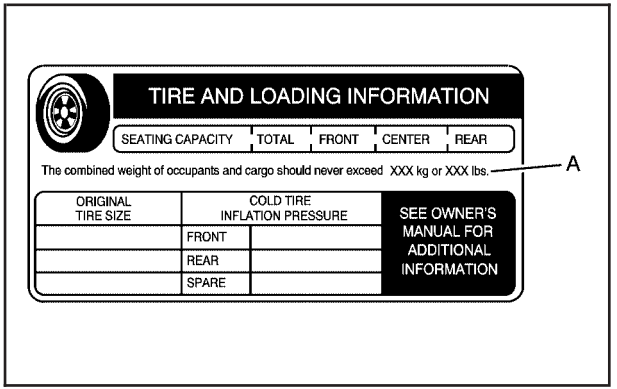

A. Vehicle Capacity Weight

The Tire and Loading Information is attached to the driver's side center pillar, below the door latch post. Vehicle's without a center pillar, extended cab models, will have the Tire and Loading Information label attached to the edge of the driver's side third door, above the door latch post. This label lists the number of people that can be in your vehicle and the total weight it can carry. This weight is called the vehicle capacity weight.

The Tire and Loading Information label also tells you the size and recommended inflation pressure for the original equipment tires on your vehicle. For more information on tires and inflation see *Tires on page 5-57* and *Inflation - Tire Pressure on page 5-64*.

If your vehicle does not have the Tire and Loading Information label, the Certification/Tire label shows the tire size and recommended inflation pressures needed to obtain the Gross Vehicle Weight Rating (GVWR) and the Gross Axle Weight Rating (GAWR) for the front and rear axles. See "Certification/Tire Label" later in this section.

Steps for Determining Correct Load Limit

1. Locate the statement “The combined weight of occupants and cargo should never exceed XXX pounds” on your vehicle placard.
2. Determine the combined weight of the driver and passengers that will be riding in your vehicle.
3. Subtract the combined weight of the driver and passengers from XXX kilograms or XXX pounds.
4. The resulting figure equals the available amount of cargo and luggage load capacity. For example, if the “XXX” amount equals 1400 lbs. and there will be five 150 lb. passengers in your vehicle, the amount of available cargo and luggage load capacity is 650 lbs. (1400 – 750 (5 x 150) = 650 lbs).
5. Determine the combined weight of luggage and cargo being loaded on the vehicle. That weight may not safely exceed the available cargo and luggage load capacity calculated in Step 4.
6. If your vehicle will be towing a trailer, the load from your trailer will be transferred to your vehicle. Consult this manual to determine how this reduces the available cargo and luggage load capacity of your vehicle.

   See *Towing a Trailer on page 4-60* for important information on towing a trailer, towing safety, and trailering tips.

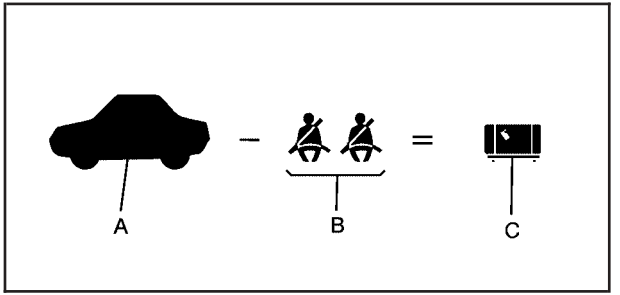

Example 1

Loading Your Vehicle

Item	Description	Total
A	Vehicle Capacity Weight for Example 1 =	1,000 lbs (453 kg)
B	Subtract Occupant Weight 150 lbs (68 kg) x 2 =	300 lbs (136 kg)
C	Available Cargo Weight =	700 lbs. (317 kg)

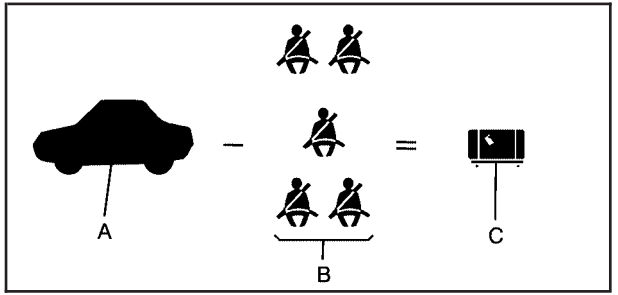

Example 2

Loading Your Vehicle

Item	Description	Total
A	Vehicle Capacity Weight for Example 2 =	1,000 lbs (453 kg)
B	Subtract Occupant Weight 150 lbs (68 kg) x 5 =	750 lbs (340 kg)
C	Available Cargo Weight =	250 lbs (113 kg)

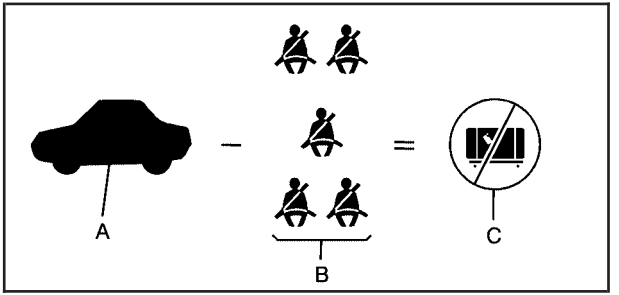

Example 3

Loading Your Vehicle

Item	Description	Total
A	Vehicle Capacity Weight for Example 3 =	1,000 lbs (453 kg)
B	Subtract Occupant Weight 200 lbs (91 kg) x 5 =	1,000 lbs (453 kg)
C	Available Cargo Weight =	0 lbs (0 kg)

Refer to your vehicle's tire and loading information label for specific information about your vehicle's capacity weight and seating positions. The combined weight of the driver, passengers, and cargo should never exceed your vehicle's capacity weight.

Certification/Tire Label

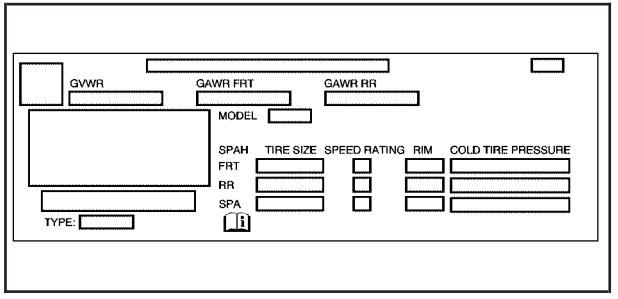

The Certification/Tire label is attached to the bottom section of the center pillar, on the driver's side of the vehicle. Vehicles without a center pillar, extended cab models, will have the Certification/Tire label attached to the edge of the driver's side, third door, below the door latch post. The label shows the size of your original tires and the inflation pressures needed to obtain the gross weight capacity of your vehicle. This is called the Gross Vehicle Weight Rating (GVWR). The GVWR includes the weight of the vehicle, all occupants, fuel, cargo and trailer tongue weight, if pulling a trailer.

The Certification/Tire label also tells you the maximum weights for the front and rear axles, called Gross Axle Weight Rating (GAWR). To find out the actual loads on your front and rear axles, you need to go to a weigh station and weigh your vehicle. Your dealer can help you with this. Be sure to spread out your load equally on both sides of the centerline.

Never exceed the GVWR for your vehicle, or the GAWR for either the front or rear axle.

If you do have a heavy load, you should spread it out.

Similar appearing vehicles may have different GVWRs and payloads. Please note your vehicle's Certification/ Tire label or consult your dealer for additional details.

⚠ CAUTION:

Do not load your vehicle any heavier than the GVWR, or either the maximum front or rear GAWR. If you do, parts on your vehicle can break, and it can change the way your vehicle handles. These could cause you to lose control and crash. Also, overloading can shorten the life of your vehicle.

Using heavier suspension components to get added durability might not change your weight ratings. Ask your dealer to help you load your vehicle the right way.

Notice: **Overloading your vehicle may cause damage. Repairs would not be covered by your warranty. Do not overload your vehicle.**

If you put things inside your vehicle–like suitcases, tools, packages, or anything else–they will go as fast as the vehicle goes. If you have to stop or turn quickly, or if there is a crash, they'll keep going.

⚠ CAUTION:

Things you put inside your vehicle can strike and injure people in a sudden stop or turn, or in a crash.

- **Put things in the cargo area of your vehicle. Try to spread the weight evenly.**
- **Never stack heavier things, like suitcases, inside the vehicle so that some of them are above the tops of the seats.**

CAUTION: (Continued)

CAUTION: (Continued)

- **Do not leave an unsecured child restraint in your vehicle.**
- **When you carry something inside the vehicle, secure it whenever you can.**
- **Do not leave a seat folded down unless you need to.**

There's also important loading information for off-road driving in this manual. See *"Loading Your Vehicle for Off-Road Driving"* under *Off-Road Driving with Your Four-Wheel-Drive Vehicle on page 4-15*.

Payload

This is the maximum load capacity that your vehicle can carry. Be sure to include the weight of the occupants as part of your load. If you added any accessories or equipment after your vehicle left the factory, remember to subtract the weight of these things from the payload. Your dealer can help you with this.

Remember not to exceed the Gross Axle Weight rating (GAWR) of the front or rear axle.

Two-Tiered Loading

By positioning four 2” X 6” wooden planks across the width of the pickup box, you can create an upper load platform. The planks must be inserted in the pickup box depressions. The length of the planks must allow for at least a 3/4 inch (2 cm) bearing surface on each end of the plank.

When using this upper load platform, be sure the load is securely tied down to prevent it from shifting. The load’s center of gravity should be positioned in a zone over the rear axle.

Any load that extends beyond the vehicle’s taillamp area must be properly marked according to local laws and regulations.

Remember not to exceed the Gross Axle Weight Rating (GAWR) of the rear axle.

Add-On Equipment

When you carry removable items, you may need to put a limit on how many people you carry inside your vehicle. Be sure to weigh your vehicle before you buy and install the new equipment.

Notice: **Overloading your vehicle may cause damage. Repairs would not be covered by your warranty. Do not overload your vehicle.**

Remember not to exceed the Gross Axle Weight Rating (GAWR) of the rear axle.

Truck-Camper Loading Information

Your vehicle was not designed to carry a slide-in camper.

Trailer Recommendations

You must subtract your hitch load from the CWR for your vehicle. Weigh your vehicle with your trailer attached, so that you won't go over the GVWR or the GAWR.

You'll get the best performance if you spread out the weight of your load the right way, and if you choose the correct hitch and trailer brakes.

For more information, see *Towing a Trailer on page 4-60* later in this section.

Pickup Conversion to Chassis Cab

General Motors is aware that some vehicle owners may consider having the pickup box removed and a commercial or recreational body installed. However, we recommend that conversions of this type not be done to pickups. Owners should be aware that, as manufactured, there are differences between a chassis cab and a pickup with the box removed which may affect vehicle safety. For specific information on this pickup, contact GM Customer Assistance. See *Customer Assistance Offices on page 7-4*.

Towing a Trailer

⚠ CAUTION:

If you do not use the correct equipment and drive properly, you can lose control when you pull a trailer. For example, if the trailer is too heavy, the brakes may not work well — or even at all. You and your passengers could be seriously injured. Pull a trailer only if you have followed all the steps in this section. Ask your dealer for advice and information about towing a trailer with your vehicle.

Notice: **Pulling a trailer improperly can damage your vehicle and result in costly repairs that would not be covered by your warranty. Always follow the instructions in this section and check with your dealer for more information about towing a trailer with your vehicle.**

To identify what the vehicle trailering capacity is for your vehicle, you should read the information in “Weight of the Trailer” that appears later in this section.

If yours was built with trailering options, as many are, it’s ready for heavier trailers. But trailering is different than just driving your vehicle by itself. Trailering means changes in handling, acceleration, braking, durability and fuel economy. Successful, safe trailering takes correct equipment, and it has to be used properly.

That’s the reason for this part. In it are many time-tested, important trailering tips and safety rules. Many of these are important for your safety and that of your passengers. So please read this section carefully before you pull a trailer.

If You Do Decide To Pull A Trailer

If you do, here are some important points:

- There are many different laws, including speed limit restrictions, having to do with trailering. Make sure your rig will be legal, not only where you live but also where you'll be driving. A good source for this information can be state or provincial police.
- Consider using a sway control. You can ask a hitch dealer about sway controls.
- Don't tow a trailer at all during the first 500 miles (800 km) your new vehicle is driven. Your engine, axle or other parts could be damaged.
- Then, during the first 500 miles (800 km) that you tow a trailer, don't drive over 50 mph (80 km/h) and don't make starts at full throttle. This helps your engine and other parts of your vehicle wear in at the heavier loads.
- You may want to shift the transmission to THIRD (3) or, if necessary, a lower gear selection if the transmission shifts too often (e.g., under heavy loads and/or hilly conditions). If you have a manual transmission and you are towing a trailer, it's better not to use the highest gear.

Three important considerations have to do with weight:

- the weight of the trailer,
- the weight of the trailer tongue
- and the weight on your vehicle's tires.

Weight of the Trailer

How heavy can a trailer safely be?

It depends on how you plan to use your rig. For example, speed, altitude, road grades, outside temperature and how much your vehicle is used to pull a trailer are all important. And, it can also depend on any special equipment that you have on your vehicle.

The following chart shows how much your trailer can weigh, based upon your vehicle model and options.

Maximum trailer weight is calculated assuming only the driver is in the tow vehicle and it has all the required trailering equipment. The weight of additional optional equipment, passengers and cargo in the tow vehicle must be subtracted from the maximum trailer weight. The weight of the trailer tongue also affects trailering capacity. See "Weight of the Trailer Tongue" next.

Vehicle*	Axle Ratio	Maximum Trailer Weight	GCWR**
2WD Regular Cab			
Automatic Transmission, 2.8 L Engine	3.73	3,500 lbs. (1 587 kg)	7 000 lbs. (3 175 kg)
Automatic Transmission, 3.5 L Engine	3.42	4,000 lbs. (1 814 kg)	8,500 lbs. (3 856 kg)
Automatic Transmission, 3.5 L Engine	3.73	4,000 lbs. (1 814 kg)	8,500 lbs. (3 855 kg)
Manual Transmission, 2.8 L Engine	3.42	2,000 lbs. (907 kg)	5,500 lbs. (2 495 kg)
Manual Transmission, 2.8 L Engine	3.73	2,500 lbs. (1 133 kg)	6,000 lbs. (2 722 kg)
Manual Transmission, 3.5 L Engine	3.42	3,500 lbs. (1 587 kg)	7,000 lbs. (3 175 kg)
Manual Transmission, 3.5 L Engine	3.73	3,900 lbs. (1 769 kg)	7,500 lbs. (3 402 kg)

Vehicle*	Axle Ratio	Maximum Trailer Weight	GCWR**
2WD Extended Cab			
Automatic Transmission, 2.8 L Engine	3.73	3,200 lbs. (1 451 kg)	7 000 lbs. (3 175 kg)
Automatic Transmission, 3.5 L Engine	3.42	4,000 lbs. (1 814 kg)	8,500 lbs. (3 856 kg)

Vehicle*	Axle Ratio	Maximum Trailer Weight	GCWR**
Automatic Transmission, 3.5 L Engine	3.73	4,000 lbs. (1 814 kg)	9,000 lbs. (4 082 kg)
Manual Transmission, 2.8 L Engine	3.42	1,700 lbs. (771 kg)	5,500 lbs. (2 495 kg)
Manual Transmission, 2.8 L Engine	3.73	2,200 lbs. (997 kg)	6,000 lbs. (2 722 kg)
Manual Transmission, 3.5 L Engine	3.42	3,200 lbs. (1 451 kg)	7,000 lbs. (3 175 kg)
Manual Transmission, 3.5 L Engine	3.73	3,600 lbs. (1 633 kg)	7,500 lbs. (3 402 kg)

Vehicle*	Axle Ratio	Maximum Trailer Weight	GCWR**
2WD Crew Cab®			
Automatic Transmission, 2.8 L Engine	3.73	3,100 lbs. (1 406 kg)	7,000 lbs. (3 175 kg)
Automatic Transmission, 3.5 L Engine	3.42	4,000 lbs. (1 814 kg)	8,500 lbs. (3 856 kg)
Automatic Transmission, 3.5 L Engine	3.73	4,000 lbs. (1 814 kg)	9,000 lbs. (4 082 kg)
Manual Transmission, 2.8 L Engine	3.42	1,600 lbs. (725 kg)	5,500 lbs. (2 495 kg)
Manual Transmission, 2.8 L Engine	3.73	2,100 lbs. (952 kg)	6,000 lbs. (2 722 kg)

Vehicle*	Axle Ratio	Maximum Trailer Weight	GCWR**
4WD Regular Cab			
Automatic Transmission, 2.8 L Engine	3.73	3,100 lbs. (1 406 kg)	7 000 lbs. (3 175 kg)
Automatic Transmission, 2.8 L Engine	4.10	3,100 lbs. (1 406 kg)	7 000 lbs. (3 175 kg)
Automatic Transmission, 3.5 L Engine	3.42	4,000 lbs. (1 814 kg)	8,500 lbs. (3 856 kg)
Automatic Transmission, 3.5 L Engine	3.73	4,000 lbs. (1 814 kg)	9,000 lbs. (4 082 kg)
Automatic Transmission, 3.5 L Engine	4.10	4,000 lbs. (1 814 kg)	9,000 lbs. (4 082 kg)
Manual Transmission, 2.8 L Engine	3.73	2,100 lbs. (952 kg)	6,000 lbs. (2 722 kg)
Manual Transmission, 2.8 L Engine	4.10	2,100 lbs. (952 kg)	6,000 lbs. (2 722 kg)
Manual Transmission, 3.5 L Engine	3.42	3,100 lbs. (1 406 kg)	7,000 lbs. (3 175 kg)
Manual Transmission, 3.5 L Engine	3.73	3,600 lbs. (1 632 kg)	7,500 lbs. (3 402 kg)
Manual Transmission, 3.5 L Engine	4.10	3,500 lbs. (1 587 kg)	7,500 lbs. (3 402 kg)

Vehicle*	Axle Ratio	Maximum Trailer Weight	GCWR**
4WD Extended Cab			
Automatic Transmission, 2.8 L Engine	3.73	2,900 lbs. (1 315 kg)	7 000 lbs. (3 175 kg)
Automatic Transmission, 2.8 L Engine	4.10	2,900 lbs. (1 315 kg)	7 000 lbs. (3 175 kg)
Automatic Transmission, 3.5 L Engine	3.42	4,000 lbs. (1 814 kg)	8,500 lbs. (3 856 kg)
Automatic Transmission, 3.5 L Engine	3.73	4,000 lbs. (1 814 kg)	9,000 lbs. (4 082 kg)
Automatic Transmission, 3.5 L Engine	4.10	4,000 lbs. (1 814 kg)	9,000 lbs. (4 082 kg)
Manual Transmission, 2.8 L Engine	4.10	1,900 lbs. (861 kg)	6,000 lbs. (2 722 kg)
Manual Transmission, 3.5 L Engine	3.42	2,900 lbs. (1 315 kg)	7,000 lbs. (3 175 kg)
Manual Transmission, 3.5 L Engine	3.73	3,400 lbs. (1 542 kg)	7,500 lbs. (3 402 kg)
Manual Transmission, 3.5 L Engine	4.10	3,300 lbs. (1 496 kg)	7,500 lbs. (3 402 kg)

Vehicle*	Axle Ratio	Maximum Trailer Weight	GCWR**
4WD Crew Cab®			
Automatic Transmission, 2.8 L Engine	3.73	2,800 lbs. (1 270 kg)	7 000 lbs. (3 175 kg)
Automatic Transmission, 2.8 L Engine	4.10	2,800 lbs. (1 270 kg)	7 000 lbs. (3 175 kg)
Automatic Transmission, 3.5 L Engine	3.42	4,000 lbs. (1 814 kg)	8,500 lbs. (3 856 kg)
Automatic Transmission, 3.5 L Engine	3.73	4,000 lbs. (1 814 kg)	9,000 lbs. (4 082 kg)
Automatic Transmission, 3.5 L Engine	4.10	4,000 lbs. (1 814 kg)	9,000 lbs. (4 082 kg)
Manual Transmission, 2.8 L Engine	4.10	1,800 lbs. (816 kg)	6,000 lbs. (2 721 kg)

**The Gross Combination Weight Rating (GCWR) is the total allowable weight of the completely loaded vehicle and trailer including any passengers, cargo, equipment and conversions. The GCWR for your vehicle should not be exceeded.

You can ask your dealer for our trailering information or advice, or you can write us at the address listed in your Warranty and Owner Assistance Information Booklet.

In Canada, write to:

General Motors of Canada Limited
Customer Communication Centre, 163-005
1908 Colonel Sam Drive
Oshawa, Ontario L1H 8P7

Weight of the Trailer Tongue

The tongue load (A) of any trailer is an important weight to measure because it affects the total or gross weight of your vehicle. The Gross Vehicle Weight (GVW) includes the curb weight of the vehicle, any cargo you may carry in it, and the people who will be riding in the vehicle. If you have a lot of options, equipment, passengers or cargo in your vehicle, it will reduce the tongue weight your vehicle can carry, which will also reduce the trailer weight your vehicle can tow. And if you will tow a trailer, you must add the tongue load to the GVW because your vehicle will be carrying that weight, too. See *Loading Your Vehicle on page 4-52* for more information about your vehicle's maximum load capacity.

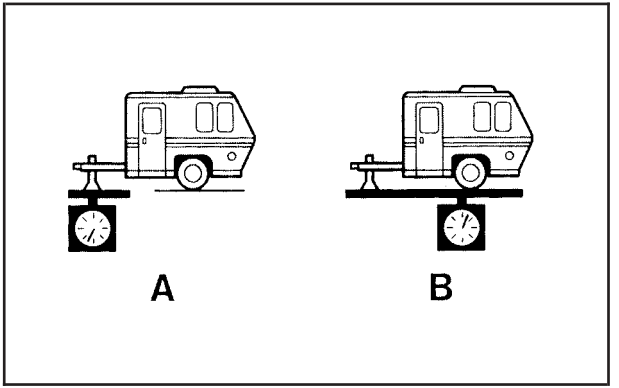

The trailer tongue weight (A) should be 10 percent to 15 percent of the total loaded trailer weight, up to a maximum of 500 lbs (226 kg) with a weight carrying hitch.

Do not exceed the maximum allowable tongue weight for your vehicle. Choose the shortest hitch extension that will position the hitch ball closest to the vehicle. This will help reduce the effect of trailer tongue weight on the rear axle.

After you've loaded your trailer, weigh the trailer and then the tongue, separately, to see if the weights are proper. If they aren't you may be able to get them right simply by moving some of the items around in the trailer.

Total Weight on Your Vehicle's Tires

Be sure your vehicle's tires are inflated to the upper limit for cold tires. You'll find these numbers on the Certification label at the rear edge of the driver's door above the door latch, or see *Loading Your Vehicle on page 4-52*. Then be sure you don't go over the GVW limit for your vehicle, including the weight of the trailer tongue.

Hitches

It's important to have the correct hitch equipment. Crosswinds, large trucks going by and rough roads are a few reasons why you'll need the right hitch.

Weight-Distributing Hitches and Weight Carrying Hitches

You can use your step bumper hitch for trailers up to 2,000 lbs (907 kg) total weight, and 200 lbs (90 kg) tongue weight.

Notice: **If you use a step-bumper hitch, your bumper could be damaged in sharp turns. Make sure you have ample room when turning to avoid contact between the trailer and the bumper.**

Safety Chains

You should always attach chains between your vehicle and your trailer. Cross the safety chains under the tongue of the trailer to help prevent the tongue from contacting the road if it becomes separated from the hitch. Instructions about safety chains may be provided by the hitch manufacturer or by the trailer manufacturer. For trailers up to 2,000 lbs. (907 kg) you may attach the safety chains to the attaching points on the bumper. For heavier trailers, follow the trailer or hitch manufacturer's recommendation for attaching safety chains. Always leave just enough slack so you can turn with your rig. Never allow safety chains to drag on the ground.

Trailer Brakes

If your trailer weighs more than 1,000 lbs. (450 kg) loaded, then it needs its own brake – and they must be adequate. Be sure to read and follow the instructions for the trailer brakes so you'll be able to install, adjust and maintain them properly.

Your trailer's brake system can tap into the vehicle's hydraulic brake system only if:

- The trailer parts can withstand 3,000 psi (20 650 kPa) of pressure.
- The trailer's brake system will use less than 0.02 cubic inch (0.3 cc) of fluid from your vehicle's master cylinder. Otherwise, both braking systems won't work well. You could even lose your brakes.

If everything checks out this far, then make the brake fluid tap at the port on the master cylinder that sends fluid to the rear brakes. But don't use copper tubing for this. If you do, it will bend and finally break off. Use steel brake tubing.

Driving with a Trailer

Towing a trailer requires a certain amount of experience. Before setting out for the open road, you'll want to get to know your rig. Acquaint yourself with the feel of handling and braking with the added weight of the trailer. And always keep in mind that the vehicle you are driving is now a good deal longer and not nearly as responsive as your vehicle is by itself.

Before you start, check all trailer hitch parts and attachments, safety chains, electrical connector, lamps, tires and mirror adjustment. If the trailer has electric brakes, start your vehicle and trailer moving and then apply the trailer brake controller by hand to be sure the brakes are working. This lets you check your electrical connection at the same time.

During your trip, check occasionally to be sure that the load is secure, and that the lamps and any trailer brakes are still working.

Following Distance

Stay at least twice as far behind the vehicle ahead as you would when driving your vehicle without a trailer. This can help you avoid situations that require heavy braking and sudden turns.

Passing

You'll need more passing distance up ahead when you're towing a trailer. And, because you're a good deal longer, you'll need to go much farther beyond the passed vehicle before you can return to your lane.

Backing Up

Hold the bottom of the steering wheel with one hand. Then, to move the trailer to the left, just move that hand to the left. To move the trailer to the right, move your hand to the right. Always back up slowly and, if possible, have someone guide you.

Making Turns

Notice: **Making very sharp turns while trailering could cause the trailer to come in contact with the vehicle. Your vehicle could be damaged. Avoid making very sharp turns while trailering.**

When you're turning with a trailer, make wider turns than normal. Do this so your trailer won't strike soft shoulders, curbs, road signs, trees or other objects. Avoid jerky or sudden maneuvers. Signal well in advance.

Turn Signals When Towing a Trailer

When you tow a trailer, your vehicle has to have extra wiring and a heavy-duty turn signal flasher.

The arrows on your instrument panel will flash whenever you signal a turn or lane change. Properly hooked up, the trailer lamps will also flash, telling other drivers you're about to turn, change lanes or stop.

When towing a trailer, the arrows on your instrument panel will flash for turns even if the bulbs on the trailer are burned out. Thus, you may think drivers behind you are seeing your signal when they are not. It's important to check occasionally to be sure the trailer bulbs are still working.

Driving On Grades

Reduce speed and shift to a lower gear before you start down a long or steep downgrade. If you don't shift down, you might have to use your brakes so much that they would get hot and no longer work well.

When towing at high altitude on steep uphill grades, consider the following: Engine coolant will boil at a lower temperature than at normal altitudes. If you turn your engine off immediately after towing at high altitude on steep uphill grades, your vehicle may show signs similar to engine overheating. To avoid this, let the engine run while parked (preferably on level ground) with the automatic transmission in PARK (P) (or the manual transmission out of gear and the parking brake applied) for a few minutes before turning the engine off. If you do get the overheat warning, see *Engine Overheating on page 5-28*.

Parking on Hills

⚠ CAUTION:

You really should not park your vehicle, with a trailer attached, on a hill. If something goes wrong, your rig could start to move. People can be injured, and both your vehicle and the trailer can be damaged.

But if you ever have to park your rig on a hill, here's how to do it:

1. Apply your regular brakes, but don't shift into PARK (P) yet, or into gear for a manual transmission. When parking uphill, turn your wheels away from the curb. When parking downhill, turn your wheels into the curb.
2. Have someone place chocks under the trailer wheels.
3. When the wheel chocks are in place, release the regular brakes until the chocks absorb the load.

4. Reapply the regular brakes. Then apply your parking brake, and then shift into PARK (P), or REVERSE (R) for a manual transmission. See *Parking Brake on page 2-29* for more information.
5. If you have a four-wheel-drive vehicle, be sure the transfer case is in a drive gear and not in NEUTRAL. See *Four-Wheel Drive on page 2-26* for more information.
6. Release the regular brakes.

When You Are Ready to Leave After Parking on a Hill

1. Apply your regular brakes and hold the pedal down while you:
   - start your engine,
   - shift into a gear, and
   - release the parking brake.
2. Let up on the brake pedal.
3. Drive slowly until the trailer is clear of the chocks.
4. Stop and have someone pick up and store the chocks.

Maintenance When Trailer Towing

Your vehicle will need service more often when you're pulling a trailer. See *Scheduled Maintenance on page 6-4* for more on this. Things that are especially important in trailer operation are automatic transmission fluid (don't overfill), engine oil, axle lubricant, belt, cooling system and brake system. Each of these is covered in this manual, and the Index will help you find them quickly. If you're trailering, it's a good idea to review these sections before you start your trip.

Check periodically to see that all hitch nuts and bolts are tight.

Section 5 Service and Appearance Care

Service 5-3
Doing Your Own Service Work 5-4
Adding Equipment to the Outside of Your Vehicle 5-4

Fuel 5-5
Gasoline Octane 5-5
Gasoline Specifications 5-5
California Fuel 5-6
Additives 5-6
Fuels in Foreign Countries 5-7
Filling Your Tank 5-7
Filling a Portable Fuel Container 5-10

Checking Things Under the Hood 5-10
Hood Release 5-11
Engine Compartment Overview 5-12
Engine Oil 5-13
Engine Air Cleaner/Filter 5-18
Automatic Transmission Fluid 5-19
Manual Transmission Fluid 5-22
Hydraulic Clutch (Manual Transmission) 5-24
Engine Coolant 5-25
Radiator Pressure Cap 5-28
Engine Overheating 5-28
Cooling System 5-30
Engine Fan Noise 5-35
Power Steering Fluid 5-36
Windshield Washer Fluid 5-37
Brakes 5-38
Battery 5-41
Jump Starting 5-42

Rear Axle 5-47

Four-Wheel Drive 5-48

Front Axle 5-49

Bulb Replacement 5-50
Halogen Bulbs 5-50
Headlamps 5-50
Front Turn Signal, Sidemarker and Daytime Running Lamps 5-52
Center High-Mounted Stoplamp (CHMSL) 5-53
Taillamps, Turn Signal, Stoplamps and Back-up Lamps 5-53
Replacement Bulbs 5-54

Windshield Wiper Blade Replacement 5-55

Section 5 Service and Appearance Care

Tires 5-57
Inflation - Tire Pressure 5-64
Tire Inspection and Rotation 5-65
When It Is Time for New Tires 5-67
Buying New Tires 5-68
Uniform Tire Quality Grading 5-69
Wheel Alignment and Tire Balance 5-70
Wheel Replacement 5-70
Tire Chains 5-72
If a Tire Goes Flat 5-73
Changing a Flat Tire 5-74
Spare Tire 5-93

Appearance Care 5-94
Cleaning the Inside of Your Vehicle 5-95
Care of Safety Belts 5-97
Weatherstrips 5-97
Cleaning the Outside of Your Vehicle 5-98
Sheet Metal Damage 5-100
Finish Damage 5-100
Underbody Maintenance 5-101
Chemical Paint Spotting 5-101
Vehicle Care/Appearance Materials 5-102

Vehicle Identification 5-103
Vehicle Identification Number (VIN) 5-103
Service Parts Identification Label 5-103

Electrical System 5-103
Add-On Electrical Equipment 5-103
Windshield Wiper Fuses 5-104
Power Windows and Other Power Options 5-104
Fuses and Circuit Breakers 5-104

Capacities and Specifications 5-108

Service

Your dealer knows your vehicle best and wants you to be happy with it. We hope you will go to your dealer for all your service needs. You will get genuine GM parts and GM-trained and supported service people.

We hope you will want to keep your GM vehicle all GM. Genuine GM parts have one of these marks:

California Proposition 65 Warning

Most motor vehicles, including this one, contain and/or emit chemicals known to the State of California to cause cancer and birth defects or other reproductive harm. Engine exhaust, many parts and systems (including some inside the vehicle), many fluids, and some component wear by-products contain and/or emit these chemicals.

Doing Your Own Service Work

If you want to do some of your own service work, you will want to use the proper service manual. It tells you much more about how to service your vehicle than this manual can. To order the proper service manual, see *Service Publications Ordering Information on page 7-11*.

Your vehicle has an air bag system. Before attempting to do your own service work, see *Servicing Your Air Bag-Equipped Vehicle on page 1-72*.

You should keep a record with all parts receipts and list the mileage and the date of any service work you perform. See *Maintenance Record on page 6-17*.

⚠ CAUTION:

You can be injured and your vehicle could be damaged if you try to do service work on a vehicle without knowing enough about it.

CAUTION: (Continued)

CAUTION: (Continued)

- **Be sure you have sufficient knowledge, experience, the proper replacement parts and tools before you attempt any vehicle maintenance task.**
- **Be sure to use the proper nuts, bolts and other fasteners. “English” and “metric” fasteners can be easily confused. If you use the wrong fasteners, parts can later break or fall off. You could be hurt.**

Adding Equipment to the Outside of Your Vehicle

Things you might add to the outside of your vehicle can affect the airflow around it. This may cause wind noise and affect windshield washer performance. Check with your dealer before adding equipment to the outside of your vehicle.

Fuel

Use of the recommended fuel is an important part of the proper maintenance of your vehicle.

Gasoline Octane

Use regular unleaded gasoline with a posted octane of 87 or higher. If the octane is less than 87, you may get a heavy knocking noise when you drive. If this occurs, use a gasoline rated at 87 octane or higher as soon as possible. Otherwise, you might damage your engine. A little pinging noise when you accelerate or drive uphill is considered normal. This does not indicate a problem exists or that a higher-octane fuel is necessary. If you are using 87 octane or higher-octane fuel and hear heavy knocking, your engine needs service.

Gasoline Specifications

It is recommended that gasoline meet specifications which were developed by automobile manufacturers around the world and contained in the World-Wide Fuel Charter which is available from the Alliance of Automobile Manufacturers at www.autoalliance.org. Gasoline meeting these specifications could provide improved driveability and emission control system performance compared to other gasoline.

Canada Only

In Canada, look for the “Auto Makers’ Choice” label on the pump.

California Fuel

If your vehicle is certified to meet California Emission Standards (see the underhood emission control label), it is designed to operate on fuels that meet California specifications. If this fuel is not available in states adopting California emissions standards, your vehicle will operate satisfactorily on fuels meeting federal specifications, but emission control system performance may be affected. The malfunction indicator lamp may turn on (see *Malfunction Indicator Lamp on page 3-30*) and your vehicle may fail a smog-check test. If this occurs, return to your authorized GM dealer for diagnosis. If it is determined that the condition is caused by the type of fuel used, repairs may not be covered by your warranty.

Additives

To provide cleaner air, all gasolines in the United States are now required to contain additives that will help prevent engine and fuel system deposits from forming, allowing your emission control system to work properly. You should not have to add anything to your fuel. However, some gasolines contain only the minimum amount of additive required to meet U.S. Environmental Protection Agency regulations. General Motors recommends that you buy gasolines that are advertised to help keep fuel injectors and intake valves clean. If your vehicle experiences problems due to dirty injectors or valves, try a different brand of gasoline.

Gasolines containing oxygenates, such as ethers and ethanol, and reformulated gasolines may be available in your area to contribute to clean air. General Motors recommends that you use these gasolines, particularly if they comply with the specifications described earlier.

Notice: **Your vehicle was not designed for fuel that contains methanol. Do not use fuel containing methanol. It can corrode metal parts in your fuel system and also damage the plastic and rubber parts. That damage would not be covered under your warranty.**

Some gasolines that are not reformulated for low emissions may contain an octane-enhancing additive called methylcyclopentadienyl manganese tricarbonyl (MMT); ask the attendant where you buy gasoline whether the fuel contains MMT. General Motors does not recommend the use of such gasolines. Fuels containing MMT can reduce the life of spark plugs and the performance of the emission control system may be affected. The malfunction indicator lamp may turn on. If this occurs, return to your authorized GM dealer for service.

Fuels in Foreign Countries

If you plan on driving in another country outside the United States or Canada, the proper fuel may be hard to find. Never use leaded gasoline or any other fuel not recommended in the previous text on fuel. Costly repairs caused by use of improper fuel would not be covered by your warranty.

To check the fuel availability, ask an auto club, or contact a major oil company that does business in the country where you will be driving.

Filling Your Tank

⚠ CAUTION:

Fuel vapor burns violently and a fuel fire can cause bad injuries. To help avoid injuries to you and others, read and follow all the instructions on the pump island. Turn off your engine when you are refueling. Do not smoke if you are near fuel or refueling your vehicle. Keep sparks, flames and smoking materials away from fuel. Do not leave the fuel pump unattended when refueling your vehicle — this is against the law in some places. Keep children away from the fuel pump; never let children pump fuel.

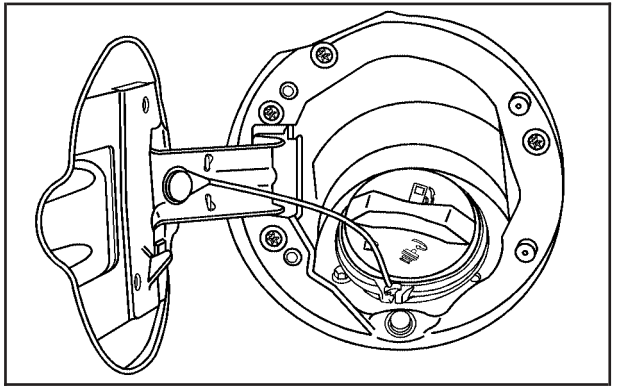

The tethered fuel cap is located behind a hinged door on the driver's side of your vehicle.

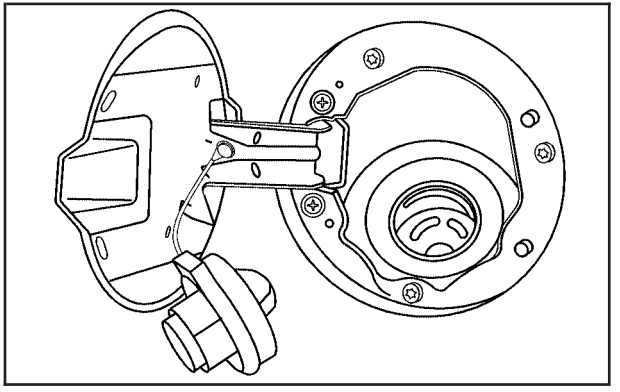

While refueling, hang the cap by the tether from the hook on the fuel filler door.

To remove the fuel cap, turn it slowly to the left (counterclockwise).

⚠ CAUTION:

If you spill fuel and then something ignites it, you could be badly burned. Fuel can spray out on you if you open the fuel cap too quickly. This spray can happen if your tank is nearly full, and is more likely in hot weather. Open the fuel cap slowly and wait for any "hiss" noise to stop. Then unscrew the cap all the way.

⚠ CAUTION:

If a fire starts while you are refueling, do not remove the nozzle. Shut off the flow of fuel by shutting off the pump or by notifying the station attendant. Leave the area immediately.

Be careful not to spill fuel. Do not top off or overfill your tank and wait a few seconds after you have finished pumping before you remove the nozzle.

Clean fuel from painted surfaces as soon as possible. See *Cleaning the Outside of Your Vehicle on page 5-98* Cleaning the Outside of Your Vehicle. When filling the tank do not overfill by squeezing in much more fuel after the pump shuts off.

When you put the fuel cap back on, turn it to the right (clockwise) until you hear a clicking sound. Make sure you fully install the cap. The diagnostic system can determine if the fuel cap has been left off or improperly installed. This would allow fuel to evaporate into the atmosphere. If the fuel cap is not properly installed, FUEL CAP will appear on the DIC and the check engine light will be lit on instrument panel cluster. See *DIC Warnings and Messages on page 3-39* and *Malfunction Indicator Lamp on page 3-30* for more information.

Notice: **If you need a new fuel cap, be sure to get the right type. Your dealer can get one for you. If you get the wrong type, it may not fit properly. This may cause your malfunction indicator lamp to light and may damage your fuel tank and emissions system. See *Malfunction Indicator Lamp on page 3-30*.**

Filling a Portable Fuel Container

⚠ CAUTION:

Never fill a portable fuel container while it is in your vehicle. Static electricity discharge from the container can ignite the gasoline vapor. You can be badly burned and your vehicle damaged if this occurs. To help avoid injury to you and others:

- **Dispense gasoline only into approved containers.**
- **Do not fill a container while it is inside a vehicle, in a vehicle's trunk, pickup bed or on any surface other than the ground.**
- **Bring the fill nozzle in contact with the inside of the fill opening before operating the nozzle. Contact should be maintained until the filling is complete.**
- **Do not smoke while pumping gasoline.**

Checking Things Under the Hood

⚠ CAUTION:

Things that burn can get on hot engine parts and start a fire. These include liquids like fuel, oil, coolant, brake fluid, windshield washer and other fluids, and plastic or rubber. You or others could be burned. Be careful not to drop or spill things that will burn onto a hot engine.

Hood Release

To open the hood, do the following:

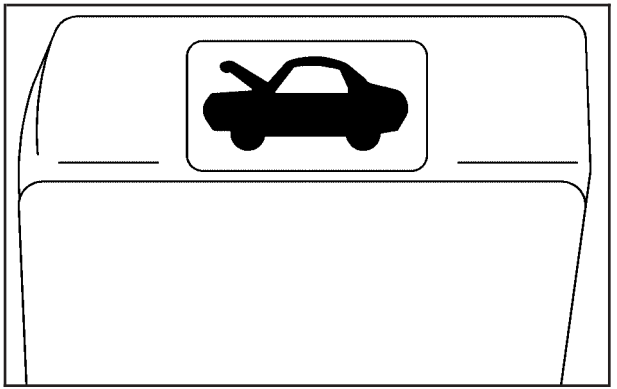

1. Pull the handle located inside the vehicle on the lower left side of the instrument panel.
2. Release the secondary latch on the hood. The secondary latch is located below the front center of the hood.
3. Lift the hood.

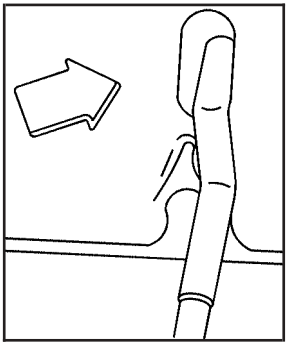

4. Release the hood prop from its retainer and put the hood prop into the slot in the hood.

Before closing the hood, be sure all the filler caps are on properly. Then lift the hood to relieve pressure on the hood prop.

Remove the hood prop from the slot in the hood and return the prop to its retainer.

Then, lower the hood down to close. It will latch when dropped from about 10 to 12 inches (25 to 30 cm) without pressing on the hood.

Engine Compartment Overview

When you open the hood on the 2.8 L engine, you'll see:

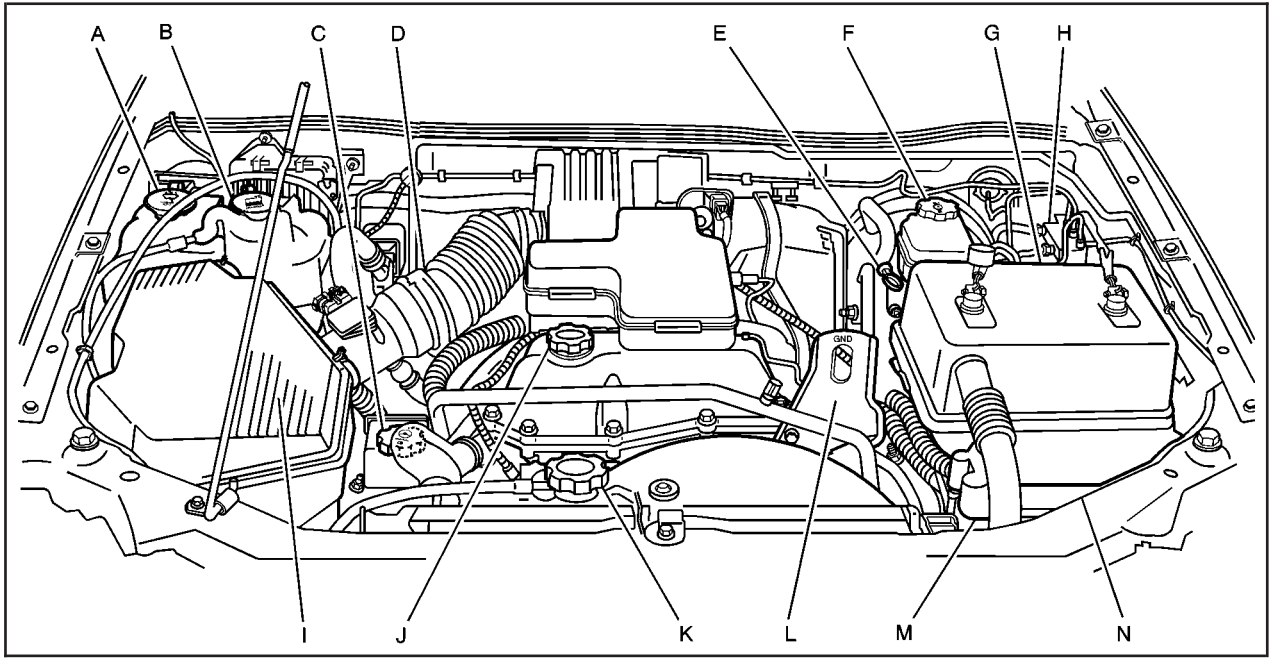

2.8 L engine shown. 3.5 L engine similar

A. Windshield Washer Fluid. See *Windshield Washer Fluid on page 5-37*.
B. Coolant Recovery Tank. See *Engine Coolant on page 5-25*.
C. Power Steering Fluid Reservoir (low in engine compartment). See *Power Steering Fluid on page 5-36*.
D. Transmission Fluid Dipstick. See *Automatic Transmission Fluid on page 5-19* and *Manual Transmission Fluid on page 5-22*.
E. Engine Oil Dipstick. See *Engine Oil on page 5-13*.
F. Brake Fluid Reservoir. See *Brakes on page 5-38*.
G. Battery. See *Battery on page 5-41*.
H. Hydraulic Clutch Fluid Reservoir (If Equipped). See *Hydraulic Clutch (Manual Transmission) on page 5-24*.
I. Engine Air Cleaner/Filter. See *Engine Air Cleaner/ Filter on page 5-18*.
J. Engine Oil Fill Cap. See *Engine Oil on page 5-13*.
K. Radiator Pressure Cap. See *Cooling System on page 5-30*.
L. Remote Negative (–) Terminal. See *Jump Starting on page 5-42*.
M. Remote Positive (+) Terminal. See *Jump Starting on page 5-42*.
N. Engine Compartment Fuse Block. See *Fuses and Circuit Breakers on page 5-104*.

Engine Oil

Checking Engine Oil

It is a good idea to check your engine oil every time you get fuel. In order to get an accurate reading, the oil must be warm and the vehicle must be on level ground.

The engine oil dipstick handle is a yellow loop. See *Engine Compartment Overview on page 5-12* for the location of the engine oil dipstick.

Turn off the engine and give the oil several minutes to drain back into the oil pan. If you don't, the oil dipstick might not show the actual level.

Pull out the dipstick and clean it with a paper towel or cloth, then push it back in all the way. Remove it again, keeping the tip down, and check the level.

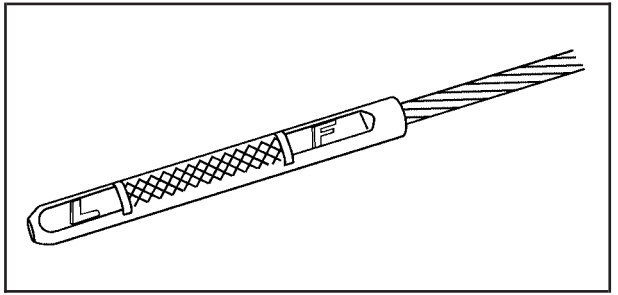

See *Engine Compartment Overview on page 5-12* for the location of the engine oil fill cap.

When to Add Engine Oil

If the oil is at or below the cross-hatched area (L), then you will need to add at least one quart of oil. But you must use the right kind. This section explains what kind of oil to use. For engine oil crankcase capacity, see *Capacities and Specifications on page 5-108*.

Notice: **Do not add too much oil. If your engine has so much oil that the oil level gets above the cross-hatched area that shows the proper operating range, your engine could be damaged.**

Be sure to add enough oil to put the level somewhere in the proper operating range. Push the dipstick all the way back in when you are through.

What Kind of Engine Oil to Use

Look for two things:

- GM6094M

  Your vehicle's engine requires oil meeting GM Standard GM6094M. You should look for and use only an oil that meets GM Standard GM6094M.

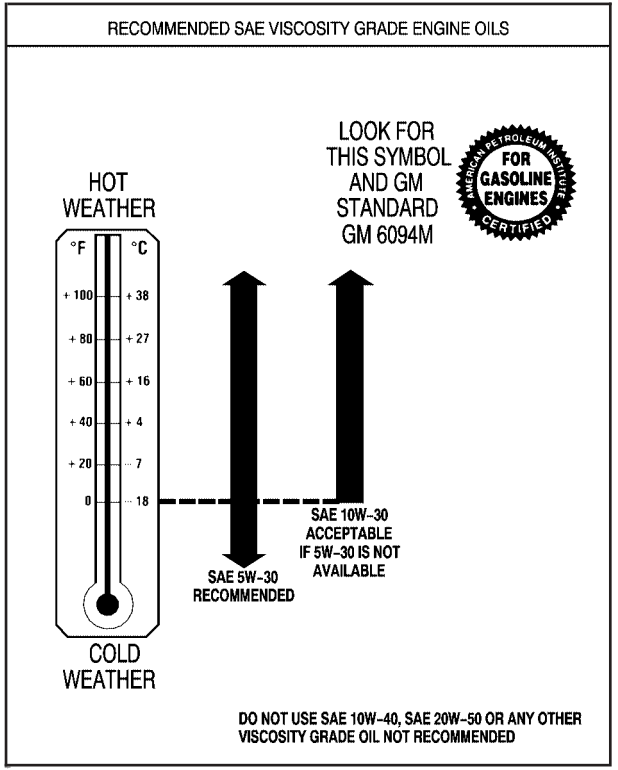

- SAE 5W-30

  As shown in the viscosity chart, SAE 5W-30 is best for your vehicle. However, if it is going to be 0°F (–18°C) or above and SAE 5W-30 is not available, you may use SAE 10W-30.

  These numbers on an oil container show its viscosity, or thickness. Do not use other viscosity oils such as SAE 20W-50.

Oils meeting these requirements should also have the starburst symbol on the container. This symbol indicates that the oil has been certified by the American Petroleum Institute (API).

You should look for this information on the oil container, and use *only* those oils that are identified as meeting GM Standard GM6094M and have the starburst symbol on the front of the oil container.

Notice: **Use only engine oil identified as meeting GM Standard GM6094M and showing the American Petroleum Institute Certified For Gasoline Engines starburst symbol. Failure to use the recommended oil can result in engine damage not covered by your warranty.**

GM Goodwrench® oil meets all the requirements for your vehicle.

If you are in an area of extreme cold, where the temperature falls below –20°F (–29°C), it is recommended that you use either an SAE 5W-30 synthetic oil or an SAE 0W-30 oil. Both will provide easier cold starting and better protection for your engine at extremely low temperatures.

Engine Oil Additives

Do not add anything to your oil. The recommended oils with the starburst symbol that meet GM Standard GM6094M are all you will need for good performance and engine protection.

When to Change Engine Oil (GM Oil Life System)

Your vehicle has a computer system that lets you know when to change the engine oil and filter. This is based on engine revolutions and engine temperature, and not on mileage. Based on driving conditions, the mileage at which an oil change will be indicated can vary considerably. For the oil life system to work properly, you must reset the system every time the oil is changed.

When the system has calculated that oil life has been diminished, it will indicate that an oil change is necessary. A CHANGE OIL message will come on. Change your oil as soon as possible within the next two times you stop for fuel. It is possible that, if you are driving under the best conditions, the oil life system may not indicate that an oil change is necessary for over a year. However, your engine oil and filter must be changed at least once a year and at this time the system must be reset. Your dealer has GM-trained people who will perform this work using genuine GM parts and reset the system. It is also important to check your oil regularly and keep it at the proper level.

If the system is ever reset accidentally, you must change your oil at 3,000 miles (5 000 km) since your last oil change. Remember to reset the oil life system whenever the oil is changed.

How to Reset the CHANGE OIL Message

The GM Oil Life System calculates when to change your engine oil and filter based on vehicle use. Anytime your oil is changed, reset the system so it can calculate when the next oil change is required. If a situation occurs where you change your oil prior to a CHANGE OIL message being turned on, reset the system.

Always reset the engine oil life to 100% after every oil change. It will not reset itself. To reset the CHANGE OIL message, do the following:

1. Display OIL LIFE on the DIC.
2. Press and hold the reset stem. The oil life will change to 100% and a beep will sound.
3. Turn the key to LOCK.

If the CHANGE OIL message comes back on when you start your vehicle, the engine oil life system has not reset. Repeat the procedure.

What to Do with Used Oil

Used engine oil contains certain elements that may be unhealthy for your skin and could even cause cancer. Do not let used oil stay on your skin for very long. Clean your skin and nails with soap and water, or a good hand cleaner. Wash or properly dispose of clothing or rags containing used engine oil. See the manufacturer's warnings about the use and disposal of oil products.

Used oil can be a threat to the environment. If you change your own oil, be sure to drain all the oil from the filter before disposal. Never dispose of oil by putting it in the trash, pouring it on the ground, into sewers, or into streams or bodies of water. Instead, recycle it by taking it to a place that collects used oil. If you have a problem properly disposing of your used oil, ask your dealer, a service station or a local recycling center for help.

Engine Air Cleaner/Filter

The engine air cleaner/filter is located on the passenger's side of the engine compartment. See *Engine Compartment Overview on page 5-12* for more information on location.

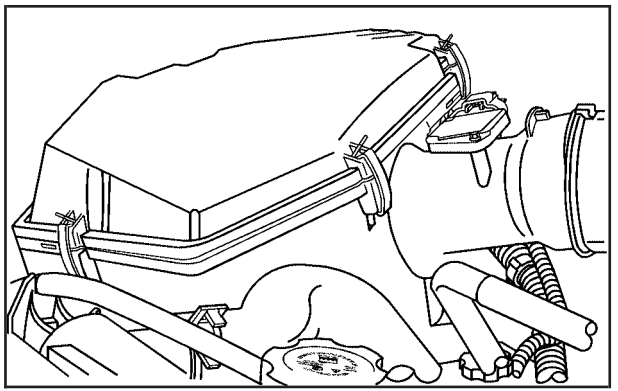

When to Inspect the Engine Air Cleaner/Filter

Inspect the air cleaner/filter every 15,000 miles (24 140 km), and replace at 25,000 miles (40 000 km).

How to Inspect the Engine Air Cleaner/Filter

To remove the engine air cleaner/filter, do the following:

1. Unfasten the clips that hold the cover on and remove the cover.
2. Lift out the engine air cleaner/filter.
3. Inspect or replace the air filter. See *Normal Maintenance Replacement Parts on page 6-15* to determine which filter to use.
4. Reinstall the engine air cleaner/filter cover. Fasten the clips to hold the cover in place.

⚠ CAUTION:

Operating the engine with the air cleaner/filter off can cause you or others to be burned. The air cleaner not only cleans the air, it helps to stop flame if the engine backfires. If it is not there and the engine backfires, you could be burned. Do not drive with it off, and be careful working on the engine with the air cleaner/filter off.

Notice: **If the air cleaner/filter is off, a backfire can cause a damaging engine fire. And, dirt can easily get into your engine, which will damage it. Always have the air cleaner/filter in place when you are driving.**

Automatic Transmission Fluid

When to Check and Change

A good time to check your automatic transmission fluid level is when the engine oil is changed.

Change both the fluid and filter every 50,000 miles (83 000 km) if the vehicle is mainly driven under one or more of these conditions:

- In heavy city traffic where the outside temperature regularly reaches 90°F (32°C) or higher.
- In hilly or mountainous terrain.
- When doing frequent trailer towing.
- Uses such as found in taxi, police or delivery service.

If you do not use your vehicle under any of these conditions, change the fluid and filter every 100,000 miles (166 000 km).

See *Scheduled Maintenance on page 6-4*.

How to Check

Because this operation can be a little difficult, you may choose to have this done at the dealership service department.

If you do it yourself, be sure to follow all the instructions here, or you could get a false reading on the dipstick.

Notice: **Too much or too little fluid can damage your transmission. Too little fluid could cause the transmission to overheat. Be sure to get an accurate reading if you check your transmission fluid.**

Wait at least 30 minutes before checking the transmission fluid level if you have been driving:

- When outside temperatures are above 90°F (32°C).
- At high speed for quite a while.
- In heavy traffic—especially in hot weather.
- While pulling a trailer.

To get the right reading, the fluid should be at normal operating temperature, which is 180°F to 200°F (82°C to 93°C).

Get the vehicle warmed up by driving about 15 miles (24 km) when outside temperatures are above 50°F (10°C). If it's colder than 50°F (10°C), drive the vehicle in THIRD (3) until the engine temperature gage moves and then remains steady for 10 minutes.

A cold fluid check can be made after the vehicle has been sitting for eight hours or more with the engine off, but this is used only as a reference. Let the engine run at idle for five minutes if outside temperatures are 50°F (10°C) or more. If it's colder than 50°F (10°C), you may have to idle the engine longer. Should the fluid level be low during this cold check, you must check the fluid hot before adding fluid. Checking the fluid hot will give you a more accurate reading of the fluid level.

Checking the Fluid Level

Prepare your vehicle as follows:

- Park your vehicle on a level place. Keep the engine running.
- With the parking brake applied, place the shift lever in PARK (P).
- With your foot on the brake pedal, move the shift lever through each gear range, pausing for about three seconds in each range. Then, position the shift lever in PARK (P).
- Let the engine run at idle for three minutes or more.

Then, without shutting off the engine, follow these steps:

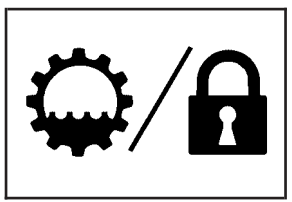

The transmission dipstick handle has this symbol on it.

The transmission dipstick is located toward the rear of the engine compartment on the passenger's side of the vehicle. See *Engine Compartment Overview on page 5-12* for more information on location.

1. Flip the handle up and then pull out the dipstick and wipe it with a clean rag or paper towel.
2. Push it back in all the way, wait three seconds and then pull it back out again.

3. Check both sides of the dipstick, and read the lower level. The fluid level must be in the COLD area, below the cross-hatched area, for a cold check or in the HOT area or cross-hatched area for a hot check.
4. If the fluid level is in the acceptable range, push the dipstick back in all the way; then flip the handle down to lock the dipstick in place.

How to Add Fluid

Refer to the Maintenance Schedule to determine what kind of transmission fluid to use. See *Recommended Fluids and Lubricants on page 6-13*.

Add fluid only after checking the transmission fluid while it is hot. (A cold check is used only as a reference.) If the fluid level is low, add only enough of the proper fluid to bring the level up to the HOT area for a hot check. It doesn't take much fluid, generally less than one pint (0.5 L). Don't overfill.

Notice: **We recommend you use only fluid labeled DEXRON®-III, because fluid with that label is made especially for your automatic transmission. Damage caused by fluid other than DEXRON®-III is not covered by your new vehicle warranty.**

- After adding fluid, recheck the fluid level as described under "How to Check" listed previously.
- When the correct fluid level is obtained, push the dipstick back in all the way; then flip the handle down to lock the dipstick in place.

Manual Transmission Fluid

When to Check

A good time to have it checked is when the engine oil is changed. However, the fluid in your manual transmission doesn't require changing.

How to Check

Because this operation can be a little difficult, you may choose to have this done at your GM dealership service department.

If you do it yourself, be sure to follow all the instructions here, or you could get a false reading.

Notice: **Too much or too little fluid can damage your transmission. Too little fluid could cause the transmission to overheat. Be sure to get an accurate reading if you check your transmission fluid.**

Check the fluid level only when your engine is off, the vehicle is parked on a level place and the transmission is cool enough for you to rest your fingers on the transmission case.

Then, follow these steps:

1. Remove the filler plug.
2. Check that the lubricant level is up to the bottom of the filler plug hole.
3. If the fluid level is good, install the plug and be sure it is fully seated. If the fluid level is low, add more fluid as described in the next steps.

How to Add Fluid

Here's how to add fluid. Refer to the Maintenance Schedule to determine what kind of fluid to use. See *Recommended Fluids and Lubricants on page 6-13*.

1. Remove the filler plug.
2. Add fluid at the filler plug hole. Add only enough fluid to bring the fluid level up to the bottom of the filler plug hole.
3. Install the filler plug. Be sure the plug is fully seated.

Hydraulic Clutch (Manual Transmission)

The hydraulic clutch linkage in your vehicle is self-adjusting. The clutch master cylinder reservoir is filled with hydraulic clutch fluid.

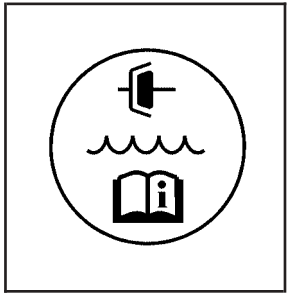

The hydraulic clutch fluid reservoir cap has this symbol on it.

It is not necessary to regularly check clutch fluid unless you suspect there is a leak in the system. Adding fluid won't correct a leak.

A fluid loss in this system could indicate a problem. Have the system inspected and repaired.

When to Check and What to Use

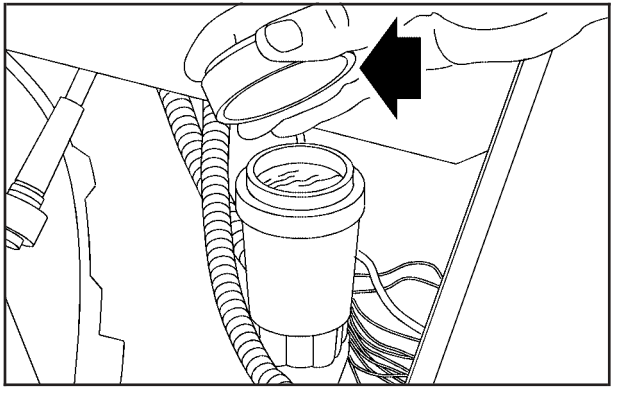

Refer to the Maintenance Schedule to determine how often you should check the fluid level in your clutch master cylinder reservoir and for the proper fluid. See *Owner Checks and Services on page 6-9* and *Recommended Fluids and Lubricants on page 6-13*.

How to Check and Add Fluid

The proper fluid should be added if the level does not reach the bottom of the diaphragm when it's in place in the reservoir. See the instructions on the reservoir cap.

Engine Coolant

The cooling system in your vehicle is filled with DEX-COOL® engine coolant. This coolant is designed to remain in your vehicle for 5 years or 150,000 miles (240 000 km), whichever occurs first, if you add only DEX-COOL® extended life coolant.

The following explains your cooling system and how to add coolant when it is low. If you have a problem with engine overheating, see *Engine Overheating on page 5-28*.

A 50/50 mixture of clean, drinkable water and DEX-COOL® coolant will:

- Give freezing protection down to –34°F (–37°C).
- Give boiling protection up to 265°F (129°C).
- Protect against rust and corrosion.
- Help keep the proper engine temperature.
- Let the warning lights and gages work as they should.

Notice: **Using coolant other than DEX-COOL® may cause premature engine, heater core or radiator corrosion. In addition, the engine coolant may require changing sooner, at 30,000 miles (50 000 km) or 24 months, whichever occurs first. Any repairs would not be covered by your warranty. Always use DEX-COOL®(silicate-free) coolant in your vehicle.**

What to Use

Use a mixture of one-half clean, drinkable water and one-half DEX-COOL® coolant which won't damage aluminum parts. If you use this coolant mixture, you don't need to add anything else.

⚠ CAUTION:

Adding only plain water to your cooling system can be dangerous. Plain water, or some other liquid such as alcohol, can boil before the proper coolant mixture will. Your vehicle's coolant warning system is set for the proper coolant mixture. With plain water or the wrong mixture, your engine could get too hot but you would not get the overheat warning. Your engine could catch fire and you or others could be burned. Use a 50/50 mixture of clean, drinkable water and the proper coolant.

Notice: **If you use an improper coolant mixture, your engine could overheat and be badly damaged. The repair cost would not be covered by your warranty. Too much water in the mixture can freeze and crack the engine, radiator, heater core and other parts.**

Notice: **If you use the proper coolant, you do not have to add extra inhibitors or additives which claim to improve the system. These can be harmful.**

Checking Coolant

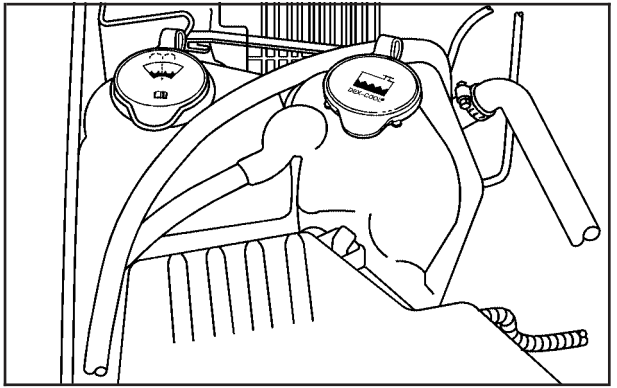

The coolant recovery tank is located toward the rear of the engine compartment on the passenger's side. See *Engine Compartment Overview on page 5-12* for more information on location.

The vehicle must be on a level surface. When your engine is cold, the coolant level should be at FULL COLD, or a little higher. When your engine is warm, the level should be above the FULL COLD level.

Adding Coolant

If you need more coolant, add the proper DEX-COOL® coolant mixture at the coolant recovery tank.

⚠ CAUTION:

Turning the radiator pressure cap when the engine and radiator are hot can allow steam and scalding liquids to blow out and burn you badly. With the coolant recovery tank, you will almost never have to add coolant at the radiator. Never turn the radiator pressure cap — even a little — when the engine and radiator are hot.

Add coolant mixture at the recovery tank, but be careful not to spill it.

⚠ CAUTION:

You can be burned if you spill coolant on hot engine parts. Coolant contains ethylene glycol, and it will burn if the engine parts are hot enough. Do not spill coolant on a hot engine.

Occasionally check the coolant level in the radiator. For information on how to add coolant to the radiator, see *Cooling System on page 5-30*.

Radiator Pressure Cap

Notice: **If the pressure cap is not tightly installed, coolant loss and possible engine damage may occur. Be sure the cap is properly and tightly secured.**

Engine Overheating

You will find a coolant temperature gage on your vehicle's instrument panel. See *Engine Coolant Temperature Gage on page 3-30*.

Your air conditioning may stop working if your engine is too hot. This is normal and helps cool the engine.

If Steam Is Coming From Your Engine

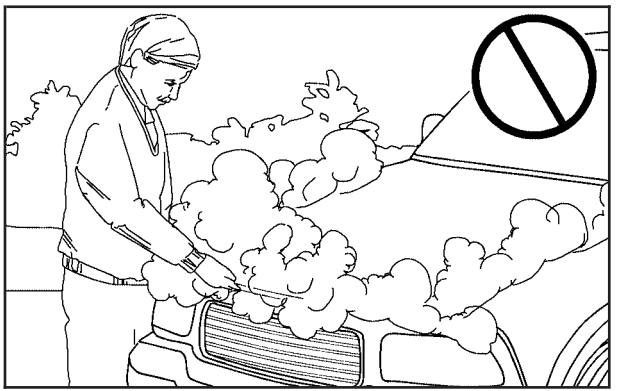

⚠ CAUTION:

Steam from an overheated engine can burn you badly, even if you just open the hood. Stay away from the engine if you see or hear steam coming from it. Just turn it off and get everyone away from the vehicle until it cools down. Wait until there is no sign of steam or coolant before you open the hood.

If you keep driving when your engine is overheated, the liquids in it can catch fire. You or others could be badly burned. Stop your engine if it overheats, and get out of the vehicle until the engine is cool.

Notice: **If your engine catches fire because you keep driving with no coolant, your vehicle can be badly damaged. The costly repairs would not be covered by your warranty.**

If No Steam Is Coming From Your Engine

If you get an engine overheat warning but see or hear no steam, the problem may not be too serious. Sometimes the engine can get a little too hot when you:

- Climb a long hill on a hot day.
- Stop after high-speed driving.
- Idle for long periods in traffic.
- Tow a trailer. See “Driving on Grades” under *Towing a Trailer on page 4-60*.

If you get the overheat warning with no sign of steam, try this for a minute or so:

1. In heavy traffic, let the engine idle in NEUTRAL while stopped. If it is safe to do so, pull off the road, shift to PARK (P) or NEUTRAL and let the engine idle.
2. Turn off the air conditioning.
3. Turn on your heater to full hot at the highest fan speed and open the window as necessary.

If you no longer have the overheat warning, you can drive. Just to be safe, drive slower for about 10 minutes. If the warning doesn't come back on, you can drive normally.

If the warning continues, pull over, stop, and park your vehicle right away.

If there's still no sign of steam, idle the engine for three minutes while you're parked. Push down the accelerator until the engine speed is about twice as fast as normal idle speed for at least three minutes while you're parked. If you still have the warning, *turn off the engine and get everyone out of the vehicle* until it cools down.

You may decide not to lift the hood but to get service help right away.

Cooling System

When you decide it's safe to lift the hood, here's what you'll see:

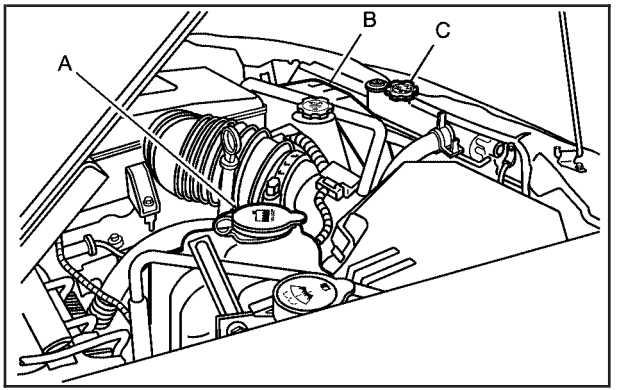

A. Coolant Recovery Tank

B. Engine Cooling Fan

C. Radiator Pressure Cap

If the coolant inside the coolant recovery tank is boiling, don't do anything else until it cools down. The vehicle should be parked on a level surface.

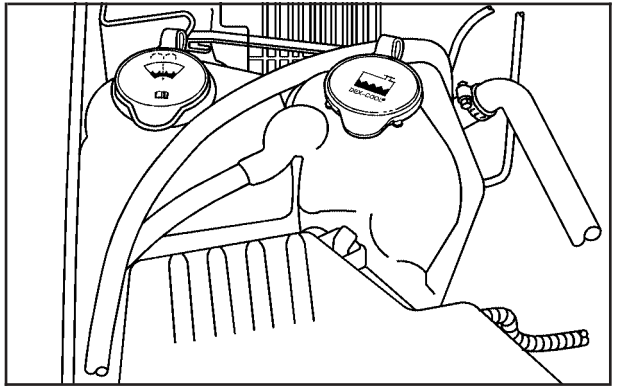

When the engine is cold, the coolant level should be at least up to the FULL COLD mark. If it isn't, you may have a leak at the pressure cap or in the radiator hoses, heater hoses, radiator, water pump or somewhere else in the cooling system.

⚠ CAUTION:

Heater and radiator hoses, and other engine parts, can be very hot. Do not touch them. If you do, you can be burned.

CAUTION: (Continued)

CAUTION: (Continued)

Do not run the engine if there is a leak. If you run the engine, it could lose all coolant. That could cause an engine fire, and you could be burned. Get any leak fixed before you drive the vehicle.

If there seems to be no leak, start the engine again. The engine cooling fan speed should increase when idle speed is doubled by pushing the accelerator pedal down. If it doesn't, your vehicle needs service. Turn off the engine.

Notice: **Engine damage from running your engine without coolant is not covered by your warranty.**

Notice: **Using coolant other than DEX-COOL® may cause premature engine, heater core or radiator corrosion. In addition, the engine coolant may require changing sooner, at 30,000 miles (50 000 km) or 24 months, whichever occurs first. Any repairs would not be covered by your warranty. Always use DEX-COOL®(silicate-free) coolant in your vehicle.**

How to Add Coolant to the Coolant Recovery Tank

If you haven't found a problem yet, but the coolant level isn't at the FULL COLD mark, add a 50/50 mixture of clean, drinkable water and DEX-COOL® engine coolant at the coolant recovery tank. See *Engine Coolant on page 5-25* for more information.

⚠ CAUTION:

Adding only plain water to your cooling system can be dangerous. Plain water, or some other liquid such as alcohol, can boil before the proper coolant mixture will. Your vehicle's coolant warning system is set for the proper coolant mixture. With plain water or the wrong mixture, your engine could get too hot but you would not get the overheat warning. Your engine could catch fire and you or others could be burned. Use a 50/50 mixture of clean, drinkable water and DEX-COOL® coolant.

Notice: **In cold weather, water can freeze and crack the engine, radiator, heater core and other parts. Use the recommended coolant and the proper coolant mixture.**

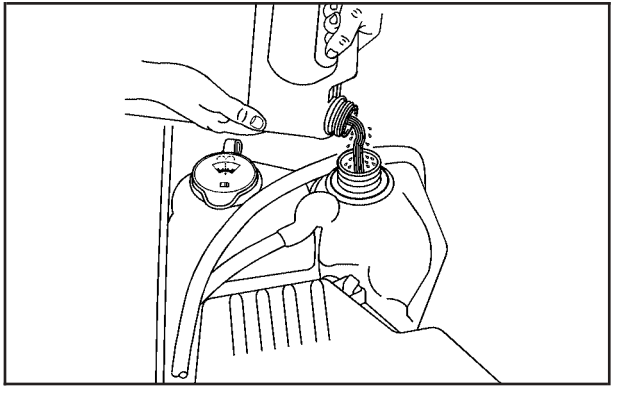

⚠ CAUTION:

You can be burned if you spill coolant on hot engine parts. Coolant contains ethylene glycol and it will burn if the engine parts are hot enough. Do not spill coolant on a hot engine.

When the coolant in the coolant recovery tank is at the FULL COLD mark, start your vehicle.

If the overheat warning continues, there's one more thing you can try. You can add the proper mixture directly to the radiator, but be sure the cooling system is cool before you do it.

⚠ CAUTION:

Steam and scalding liquids from a hot cooling system can blow out and burn you badly. They are under pressure, and if you turn the radiator pressure cap — even a little — they can come out at high speed. Never turn the cap when the cooling system, including the radiator pressure cap, is hot. Wait for the cooling system and radiator pressure cap to cool if you ever have to turn the pressure cap.

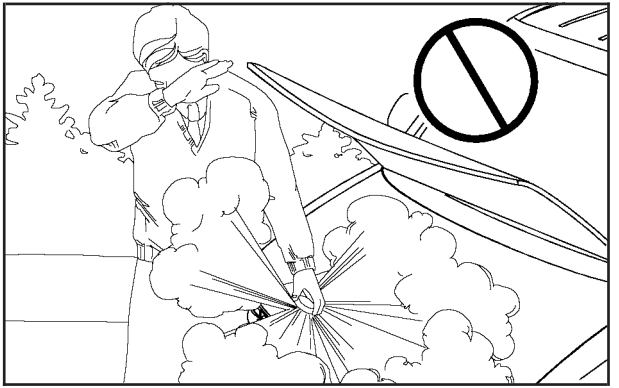

How to Add Coolant to the Radiator

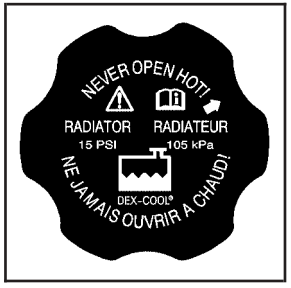

You can remove the radiator pressure cap when the cooling system, including the upper radiator hose, is no longer hot.

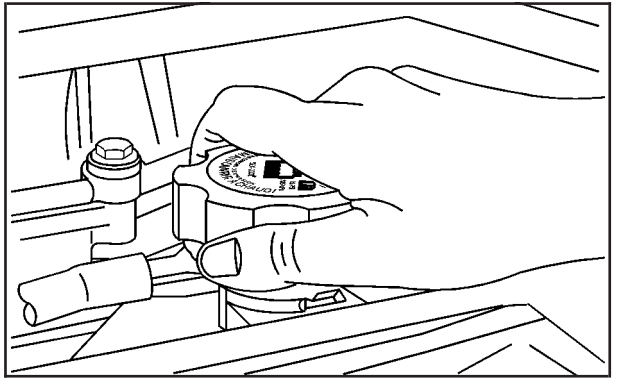

1. Turn the pressure cap slowly counterclockwise about one full turn.

   If you hear a hiss, wait for that to stop. A hiss means there is still some pressure left.
2. Then keep turning the cap to remove it.
3. Fill the radiator with the proper DEX-COOL® coolant mixture, up to the base of the filler neck. See *Engine Coolant on page 5-25* for more information about the proper coolant mixture.

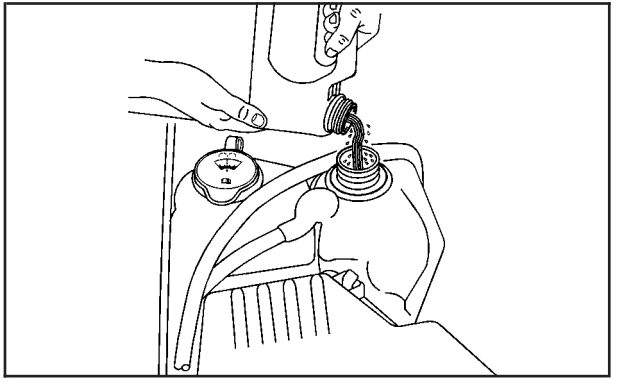

4. Then fill the coolant recovery tank to the FULL COLD mark.
5. Reinstall the cap on the coolant recovery tank, but leave the radiator pressure cap off.

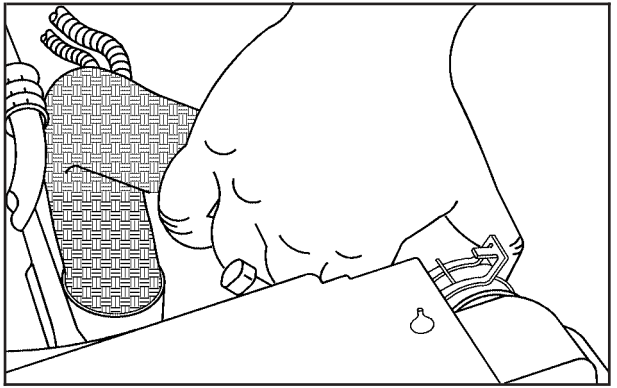

6. Start the engine and let it run until you can feel the upper radiator hose getting hot. Watch out for the engine cooling fan.
7. By this time, the coolant level inside the radiator filler neck may be lower. If the level is lower, add more of the proper DEX-COOL® coolant mixture through the filler neck until the level reaches the base of the filler neck.

   Then replace the pressure cap. At any time during this procedure if coolant begins to flow out of the filler neck, reinstall the pressure cap. Be sure to secure it tightly.

Engine Fan Noise

This vehicle has a clutched engine cooling fan. When the clutch is engaged, the fan spins faster to provide more air to cool the engine. In most everyday driving conditions, the clutch is not engaged. This improves fuel economy and reduces fan noise. Under heavy vehicle loading, trailer towing and/or high outside temperatures, the fan speed increases when the clutch engages. So you may hear an increase in fan noise. This is normal and should not be mistaken as the transmission slipping or making extra shifts. It is merely the cooling system functioning properly. The fan will slow down when additional cooling is not required and the clutch disengages.

You may also hear this fan noise when you start the engine. It will go away as the fan clutch disengages.

Power Steering Fluid

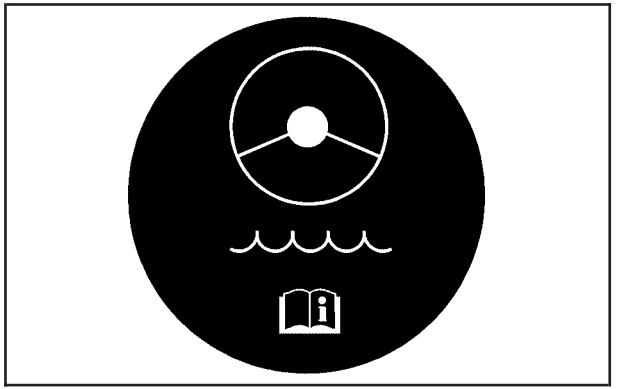

The power steering fluid reservoir is located near the front of the engine compartment, behind the radiator. See *Engine Compartment Overview on page 5-12* for power steering fluid reservoir location.

When to Check Power Steering Fluid

It is not necessary to regularly check power steering fluid unless you suspect there is a leak in the system or you hear an unusual noise. A fluid loss in this system could indicate a problem. Have the system inspected and repaired.

How to Check Power Steering Fluid

1. Turn the key off and let the engine compartment cool down.
2. Wipe the cap and the top of the reservoir clean.
3. Unscrew the cap and wipe the dipstick with a clean rag.
4. Replace the cap and completely tighten it.
5. Then remove the cap again and look at the fluid level on the dipstick.

The level should be between the ADD and FULL marks. If necessary, add only enough fluid to bring the level up to the proper range.

What to Use

To determine what kind of fluid to use, see *Recommended Fluids and Lubricants on page 6-13*. Always use the proper fluid. Failure to use the proper fluid can cause leaks and damage hoses and seals.

Windshield Washer Fluid

What to Use

When you need windshield washer fluid, be sure to read the manufacturer's instructions before use. If you will be operating your vehicle in an area where the temperature may fall below freezing, use a fluid that has sufficient protection against freezing.

Adding Washer Fluid

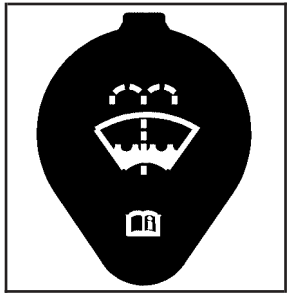

Open the cap with the washer symbol on it. Add washer fluid until the tank is full. See *Engine Compartment Overview on page 5-12* for reservoir location.

Notice:

- **When using concentrated washer fluid, follow the manufacturer's instructions for adding water.**
- **Do not mix water with ready-to-use washer fluid. Water can cause the solution to freeze and damage your washer fluid tank and other parts of the washer system. Also, water does not clean as well as washer fluid.**
- **Fill your washer fluid tank only three-quarters full when it is very cold. This allows for expansion if freezing occurs, which could damage the tank if it is completely full.**
- **Do not use engine coolant (antifreeze) in your windshield washer. It can damage your washer system and paint.**

Brakes

Brake Fluid

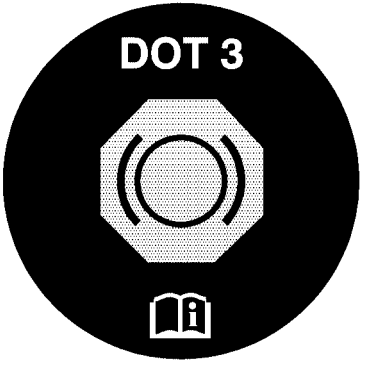

Your brake master cylinder reservoir is filled with DOT-3 brake fluid. See *Engine Compartment Overview on page 5-12* for the location of the reservoir.

There are only two reasons why the brake fluid level in the reservoir might go down. The first is that the brake fluid goes down to an acceptable level during normal brake lining wear. When new linings are put in, the fluid level goes back up. The other reason is that fluid is leaking out of the brake system. If it is, you should have your brake system fixed, since a leak means that sooner or later your brakes will not work well, or will not work at all.

So, it is not a good idea to “top off” your brake fluid. Adding brake fluid will not correct a leak. If you add fluid when your linings are worn, then you will have too much fluid when you get new brake linings. You should add (or remove) brake fluid, as necessary, only when work is done on the brake hydraulic system.

⚠ CAUTION:

If you have too much brake fluid, it can spill on the engine. The fluid will burn if the engine is hot enough. You or others could be burned, and your vehicle could be damaged. Add brake fluid only when work is done on the brake hydraulic system. See “Checking Brake Fluid” in this section.

Refer to the Maintenance Schedule to determine when to check your brake fluid. See *Scheduled Maintenance on page 6-4*.

Checking Brake Fluid

You can check the brake fluid without taking off the cap.

Just look at the brake fluid reservoir. The fluid level should be above MIN. If it is not have your brake system checked to see if there is a leak.

After work is done on the brake hydraulic system, make sure the level is above the MIN but not over the MAX mark.

What to Add

When you do need brake fluid, use only DOT-3 brake fluid. Use new brake fluid from a sealed container only. See *Recommended Fluids and Lubricants on page 6-13*.

Always clean the brake fluid reservoir cap and the area around the cap before removing it. This will help keep dirt from entering the reservoir.

⚠ CAUTION:

With the wrong kind of fluid in your brake system, your brakes may not work well, or they may not even work at all. This could cause a crash. Always use the proper brake fluid.

Notice:

- **Using the wrong fluid can badly damage brake system parts. For example, just a few drops of mineral-based oil, such as engine oil, in your brake system can damage brake system parts so badly that they will have to be replaced. Do not let someone put in the wrong kind of fluid.**
- **If you spill brake fluid on your vehicle's painted surfaces, the paint finish can be damaged. Be careful not to spill brake fluid on your vehicle. If you do, wash it off immediately. See *Appearance Care on page 5-94*.**

Brake Wear

Your vehicle has front disc brakes and rear drum brakes.

Disc brake pads have built-in wear indicators that make a high-pitched warning sound when the brake pads are worn and new pads are needed. The sound may come and go or be heard all the time your vehicle is moving (except when you are pushing on the brake pedal firmly).

⚠ CAUTION:

The brake wear warning sound means that soon your brakes will not work well. That could lead to an accident. When you hear the brake wear warning sound, have your vehicle serviced.

Notice: **Continuing to drive with worn-out brake pads could result in costly brake repair.**

Some driving conditions or climates may cause a brake squeal when the brakes are first applied or lightly applied. This does not mean something is wrong with your brakes.

Properly torqued wheel nuts are necessary to help prevent brake pulsation. When tires are rotated, inspect brake pads for wear and evenly tighten wheel nuts in the proper sequence to GM torque specifications.

Rear drum brakes do not have wear indicators, but if you ever hear a rear brake rubbing noise, have the rear brake linings inspected immediately. Also, the rear brake drums should be removed and inspected each time the tires are removed for rotation or changing. When you have the front brake pads replaced, have the rear brakes inspected, too.

Brake linings should always be replaced as complete axle sets.

Brake Pedal Travel

See your dealer if the brake pedal does not return to normal height, or if there is a rapid increase in pedal travel. This could be a sign of brake trouble.

Brake Adjustment

Every time you make a brake stop, your brakes adjust for wear.

Replacing Brake System Parts

The braking system on a vehicle is complex. Its many parts have to be of top quality and work well together if the vehicle is to have really good braking. Your vehicle was designed and tested with top-quality GM brake parts. When you replace parts of your braking system — for example, when your brake linings wear down and you need new ones put in — be sure you get new approved GM replacement parts. If you do not, your brakes may no longer work properly. For example, if someone puts in brake linings that are wrong for your vehicle, the balance between your front and rear brakes can change — for the worse. The braking performance you have come to expect can change in many other ways if someone puts in the wrong replacement brake parts.

Battery

Your new vehicle comes with a maintenance free ACDelco® battery. When it is time for a new battery, get one that has the replacement number shown on the original battery's label. We recommend an ACDelco® battery. See *Engine Compartment Overview on page 5-12* for battery location.

Warning: Battery posts, terminals and related accessories contain lead and lead compounds, chemicals known to the State of California to cause cancer and reproductive harm. Wash hands after handling.

Vehicle Storage

If you are not going to drive your vehicle for 25 days or more, remove the black, negative (–) cable from the battery. This will help keep your battery from running down.

⚠ CAUTION:

Batteries have acid that can burn you and gas that can explode. You can be badly hurt if you are not careful. See *Jump Starting on page 5-42* for tips on working around a battery without getting hurt.

Contact your dealer to learn how to prepare your vehicle for longer storage periods.

Also, for your audio system, see *Theft-Deterrent Feature (Non-RDS Radios) on page 3-67* or *Theft-Deterrent Feature (RDS Radios) on page 3-67*.

Jump Starting

If your battery has run down, you may want to use another vehicle and some jumper cables to start your vehicle. Be sure to follow the steps below to do it safely.

⚠ CAUTION:

Batteries can hurt you. They can be dangerous because:

- **They contain acid that can burn you.**
- **They contain gas that can explode or ignite.**
- **They contain enough electricity to burn you.**

If you do not follow these steps exactly, some or all of these things can hurt you.

Notice: **Ignoring these steps could result in costly damage to your vehicle that would not be covered by your warranty.**

Trying to start your vehicle by pushing or pulling it will not work, and it could damage your vehicle.

1. Check the other vehicle. It must have a 12-volt battery with a negative ground system.

Notice: **If the other vehicle's system is not a 12-volt system with a negative ground, both vehicles can be damaged. Only use vehicles with 12-volt systems with negative grounds to jump start your vehicle.**

2. Get the vehicles close enough so the jumper cables can reach, but be sure the vehicles aren't touching each other. If they are, it could cause a ground connection you don't want. You wouldn't be able to start your vehicle, and the bad grounding could damage the electrical systems.

   To avoid the possibility of the vehicles rolling, set the parking brake firmly on both vehicles involved in the jump start procedure. Put an automatic transmission in PARK (P) or a manual transmission in NEUTRAL before setting the parking brake. If you have a four-wheel-drive vehicle, be sure the transfer case is not in NEUTRAL (N).

Notice: **If you leave your radio or other accessories on during the jump starting procedure, they could be damaged. The repairs would not be covered by your warranty. Always turn off your radio and other accessories when jump starting your vehicle.**

3. Turn off the ignition on both vehicles. Unplug unnecessary accessories plugged into the cigarette lighter or in the accessory power outlets. Turn off the radio and all lamps that aren't needed. This will avoid sparks and help save both batteries. And it could save your radio!

4. Open the hoods and locate the batteries. Find the positive (+) and negative (-) terminal locations on each vehicle. See *Engine Compartment Overview on page 5-12* for more information on location of the battery.

⚠ CAUTION:

Using a match near a battery can cause battery gas to explode. People have been hurt doing this, and some have been blinded. Use a flashlight if you need more light.

Be sure the batteries have enough water. You do not need to add water to the ACDelco® battery (or batteries) installed in your new vehicle. But if a battery has filler caps, be sure the right amount of fluid is there. If it is low, add water to take care of that first. If you do not, explosive gas could be present.

Battery fluid contains acid that can burn you. Do not get it on you. If you accidentally get it in your eyes or on your skin, flush the place with water and get medical help immediately.

⚠ CAUTION:

Fans or other moving engine parts can injure you badly. Keep your hands away from moving parts once the engine is running.

5. Check that the jumper cables don't have loose or missing insulation. If they do, you could get a shock. The vehicles could be damaged too.

   Before you connect the cables, here are some basic things you should know. Positive (+) will go to positive (+) or to a remote positive (+) terminal if the vehicle has one. Negative (-) will go to a heavy, unpainted metal engine part or to a remote negative (-) terminal if the vehicle has one.

   Don't connect positive (+) to negative (-) or you'll get a short that would damage the battery and maybe other parts too. And don't connect the negative (-) cable to the negative (-) terminal on the dead battery because this can cause sparks.

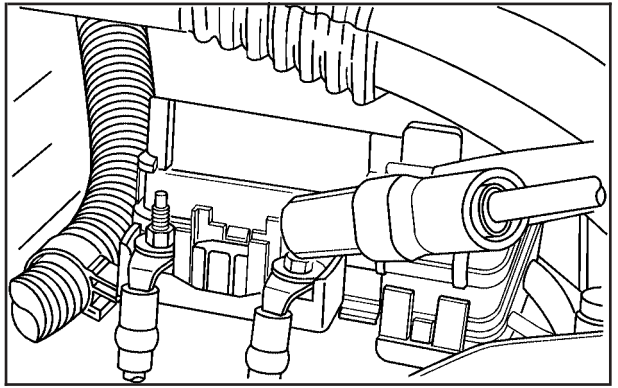

6. Connect the red positive (+) cable to the positive (+) terminal of the dead battery. Use a remote positive (+) terminal if the vehicle has one.

7. Don't let the other end touch metal. Connect it to the positive (+) terminal of the good battery. Use a remote positive (+) terminal if the vehicle has one.

8. Now connect the black negative (-) cable to the negative (-) terminal of the good battery. Use a remote negative (-) terminal if the vehicle has one.

Don't let the other end touch anything until the next step. The other end of the negative (-) cable *doesn't* go to the dead battery. It goes to a heavy, unpainted metal engine part, or to a remote negative (-) terminal on the vehicle with the dead battery.

9. Connect the other end of the negative (-) cable at least 18 inches (45 cm) away from the dead battery, but not near engine parts that move. The electrical connection is just as good there, and the chance of sparks getting back to the battery is much less.
10. Now start the vehicle with the good battery and run the engine for awhile.
11. Try to start the vehicle that had the dead battery. If it won't start after a few tries, it probably needs service.

Notice: **If the jumper cables are removed in the wrong order, electrical shorting may occur and damage the vehicle. The repairs would not be covered by your warranty. Remove the jumper cables in the correct order, making sure that the cables do not touch each other or other metal.**

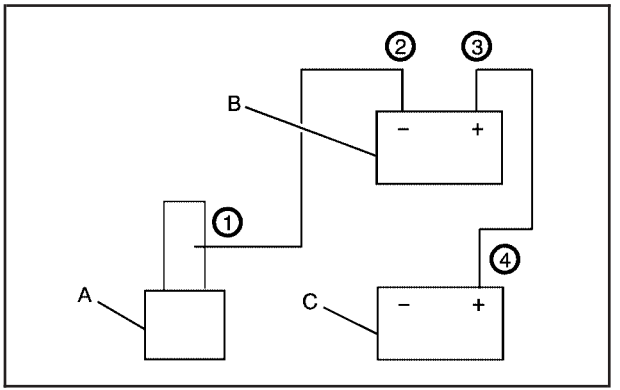

A. Heavy, Unpainted Metal Engine Part
B. Good Battery
C. Dead Battery

To disconnect the jumper cables from both vehicles, do the following:

1. Disconnect the black negative (-) cable from the vehicle that had the dead battery.
2. Disconnect the black negative (-) cable from the vehicle with the good battery.
3. Disconnect the red positive (+) cable from the vehicle with the good battery.
4. Disconnect the red positive (+) cable from the other vehicle.

Rear Axle

When to Check and Change Lubricant

It is not necessary to regularly check rear axle fluid unless you suspect there is a leak or you hear an unusual noise. A fluid loss could indicate a problem. Have it inspected and repaired.

How to Check Lubricant

To get an accurate reading, the vehicle should be on a level surface.

If the level is below the bottom of the filler plug hole, you will need to add some lubricant. Add enough lubricant to raise the level to the bottom of the filler plug hole.

What to Use

See *Recommended Fluids and Lubricants on page 6-13* to determine which kind of lubricant to use.

Four-Wheel Drive

Lubricant checks in this section also apply to these vehicles. However, there are two additional systems that need lubrication.

Transfer Case

When to Check Lubricant

Refer to the Maintenance Schedule to determine how often to check the lubricant. See *Additional Required Services on page 6-6*.

How to Check Lubricant

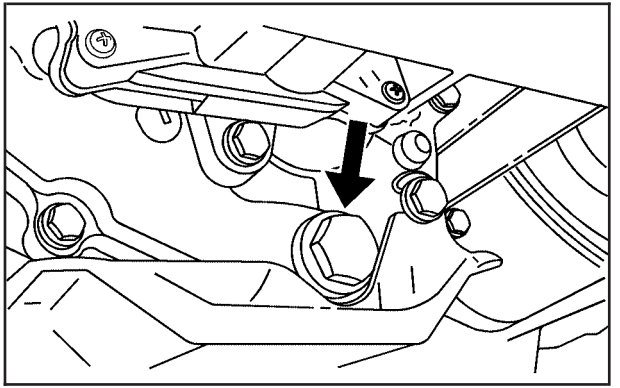

To get and accurate reading, the vehicle should be on a level service.

If the level is below the bottom of the filler plug hole, you'll need to add some lubricant. Remove the plug and add enough lubricant to raise the level to the bottom of the filler plug hole. Use care not to overtighten the plug.

What to Use

Refer to the Maintenance Schedule to determine what kind of lubricant to use. See *Recommended Fluids and Lubricants on page 6-13*.

Front Axle

When to Check and Change Lubricant

It is not necessary to regularly check front axle fluid unless you suspect there is a leak or you hear an unusual noise. A fluid loss could indicate a problem. Have it inspected and repaired.

How to Check Lubricant

To get an accurate reading, the vehicle should be on a level surface.

If the level is below the bottom of the filler plug hole, you may need to add some lubricant.

When the differential is cold, add enough lubricant to raise the level to 1/2 inch (12 mm) below the filler plug hole.

When the differential is at operating temperature (warm), add enough lubricant to raise the level to the bottom of the filler plug hole.

What to Use

See *Recommended Fluids and Lubricants on page 6-13* to determine what kind of lubricant to use.

Bulb Replacement

See *Replacement Bulbs on page 5-54* for the proper types of bulbs to use. For any bulb changing procedure not listed in this section, contact your dealer's service department.

Halogen Bulbs

⚠ CAUTION:

Halogen bulbs have pressurized gas inside and can burst if you drop or scratch the bulb. You or others could be injured. Be sure to read and follow the instructions on the bulb package.

Headlamps

Composite Headlamp System

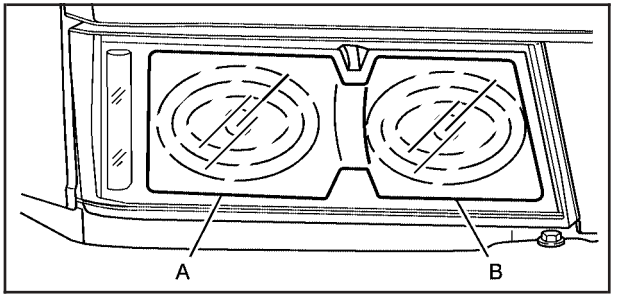

A. Low-Beam Headlamp

B. High-Beam Headlamp

To replace the bulbs, do the following:

1. Open and support the hood. See *Hood Release on page 5-11*.
2. Access the bulb/sockets from the engine compartment.

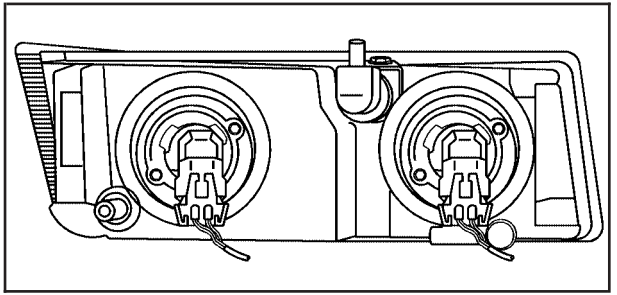

3. Turn the bulb socket counterclockwise and pull it straight out of the headlamp housing.
4. Unplug the electrical connector from the old bulb.
5. Plug in the electrical connector to the new bulb. Use care not to touch the new bulb with your bare hand or anything damp or oily.
6. Place the connector with the new bulb into the headlamp housing and turn it clockwise until it is tight.

Sealed Beam Headlamps

To replace the headlamp capsule, do the following:

1. Remove the four retainer screws and the retainer.
2. Pull the headlamp capsule toward you and unplug the electrical connector.
3. Plug the electrical connector into the new headlamp capsule.
4. Reverse Steps 1 and 2 to reinstall the headlamp.

Front Turn Signal, Sidemarker and Daytime Running Lamps

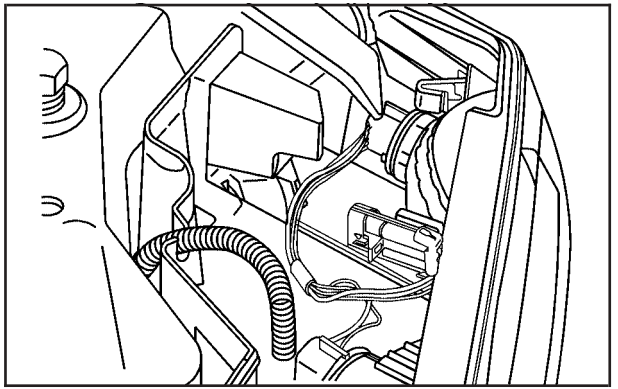

1. Remove the turn signal/parking lamp/daytime running lamp (DRL) assembly by pressing on the release clip on the outboard side of the housing and pulling the outboard end of the lamp toward you.
2. Pull the inboard side of the lamp out from the small post in the grille.
3. Turn the bulb socket counterclockwise and remove it from the lamp housing.
4. Remove the old bulb from the bulb socket.
5. Insert the new bulb into the bulb socket.
6. Insert the bulb socket into the lamp housing and turn it clockwise until it is tight.

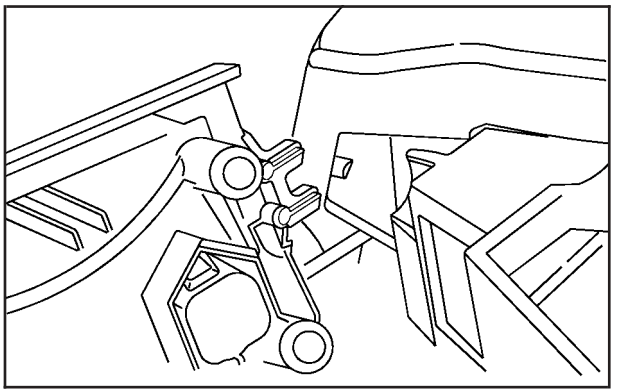

7. Place the inboard end of the turn signal/parking lamp/DRL housing over the small post in the grille.
8. Align the release clip of the lamp assembly with the square opening in the grille, and push the outboard side of the lamp assembly in, until the release clip snaps into place.

Center High-Mounted Stoplamp (CHMSL)

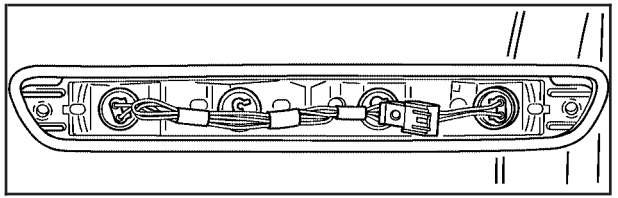

1. Remove the screws and lift off the lamp assembly.
2. Turn the bulb socket counterclockwise and remove it from the housing.
3. Pull the bulb straight out of the socket.
4. Insert the new bulb into the socket and press it in until tight.
5. Insert the bulb socket into the housing and turn until tight.
6. Reinstall the lamp assembly and tighten the screws.

Taillamps, Turn Signal, Stoplamps and Back-up Lamps

1. Open the tailgate. See *Tailgate on page 2-10*.

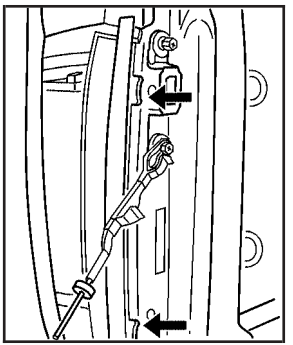

2. Remove the two rear lamp assembly screws near the tailgate latch and pull out the lamp assembly.

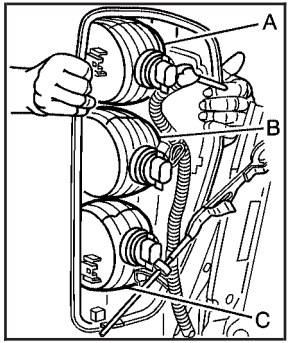

A. Stoplamp/Taillamp
B. Turn Signal
C. Back-up Lamp

3. Turn the bulb socket counterclockwise to remove it from the taillamp housing.
4. Pull the old bulb straight out from the socket.
5. Press a new bulb into the socket and turn the socket clockwise into the taillamp housing until it is tight.
6. Reinstall the rear lamp assembly and tighten the screws.
7. Close the tailgate.

Replacement Bulbs

Exterior Lamp	Bulb Number
Center High-Mounted Stoplamp (CHMSL)	912
Composite Headlamps Low-Beam High-Beam	 9006 9005
Headlamps, Sealed-Beam	H6054
Park/ Front Turn Signal/Daytime Running Lamps (DRL)	7157A
Parking Lamps (Inboard)	3157A
Stoplamps, Rear Turn Signals, Taillamps, and Back-Up Lamps	3057
For any bulb not listed here, contact your dealer.	

Windshield Wiper Blade Replacement

Windshield wiper blades should be inspected at least twice a year for wear and cracking. See “Wiper Blade Check” under *Cleaning the Outside of Your Vehicle on page 5-98* for more information.

Replacement blades come in different types and are removed in different ways. For proper type and length, see *Normal Maintenance Replacement Parts on page 6-15*.

Notice: **Allowing the wiper blade arm to touch the windshield when no wiper blade is installed could damage the windshield. Any damage that occurs would not be covered by your warranty. Do not allow the wiper blade arm to touch the windshield.**

1. To remove the old wiper blades, lift the wiper arm until it locks into a vertical position.

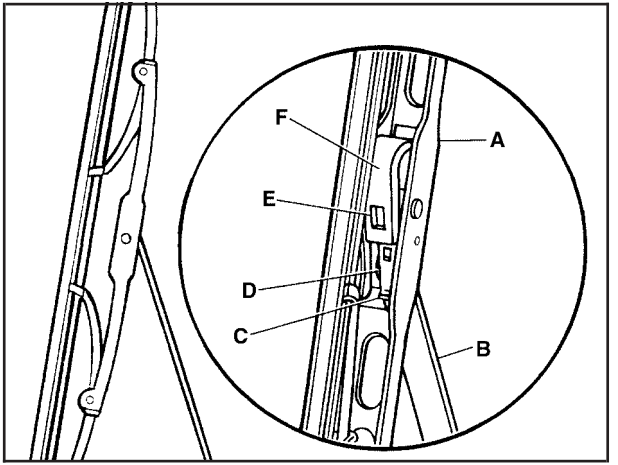

A. Blade Assembly
B. Arm Assembly
C. Locking Tab
D. Blade Pivot
E. Hook Slot
F. Arm Hook

2. Press down on the blade assembly pivot locking tab. Pull down on the blade assembly to release it from the wiper arm hook.

3. Remove the insert from the blade assembly. The insert has two notches at one end that are locked by bottom claws of the blade assembly. At the notched end, pull the insert from the blade assembly.

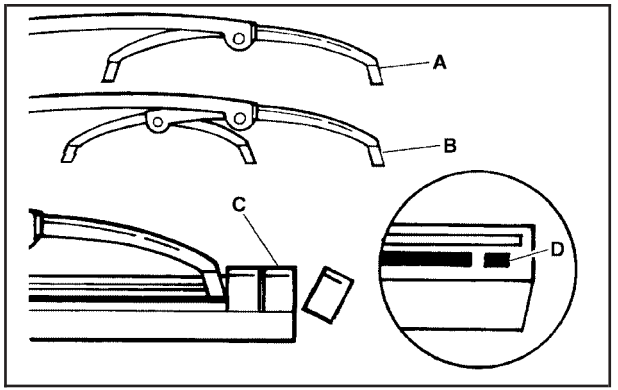

4. To install the new wiper insert, slide the insert (D), notched end last, into the end with two blade claws (A). Slide the insert all the way through the blade claws at the opposite end (B). The plastic caps (C) will be forced off as the insert is fully inserted.
5. Be sure that the notches are locked by the bottom claws. Make sure that all other claws are properly locked on both sides of the insert slots.

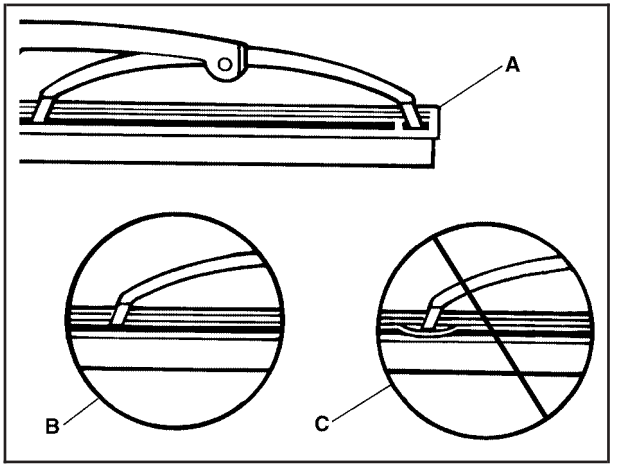

A. Claw in Notch
B. Correct Installation
C. Incorrect Installation

6. Put the blade assembly pivot in the wiper arm hook. Pull up until the pivot locking tab locks in the hook slot.
7. Carefully lower the wiper arm and blade assembly onto the windshield.

Tires

Your new vehicle comes with high-quality tires made by a leading tire manufacturer. If you ever have questions about your tire warranty and where to obtain service, see your GM Warranty booklet for details. For additional information refer to the tire manufacturer's booklet included with your vehicle's Owner's Manual.

⚠ CAUTION:

Poorly maintained and improperly used tires are dangerous.

- **Overloading your tires can cause overheating as a result of too much friction. You could have an air-out and a serious accident. See "Loading Your Vehicle" in the Index.**

CAUTION: (Continued)

CAUTION: (Continued)

- **Underinflated tires pose the same danger as overloaded tires. The resulting accident could cause serious injury. Check all tires frequently to maintain the recommended pressure. Tire pressure should be checked when your tires are cold.**
- **Overinflated tires are more likely to be cut, punctured or broken by a sudden impact — such as when you hit a pothole. Keep tires at the recommended pressure.**
- **Worn, old tires can cause accidents. If your tread is badly worn, or if your tires have been damaged, replace them.**

Tire Sidewall Labeling

Useful information about a tire is molded into its sidewall. The following illustrations are examples of a typical P-Metric and a compact spare tire sidewall.

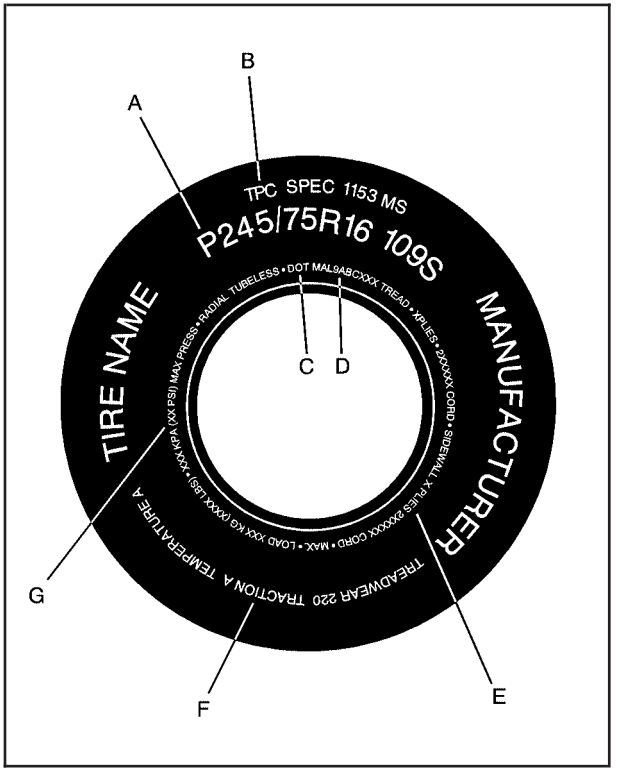

P-Metric Tire Example

(A) Tire Size Code: The tire size code is a combination of letters and numbers used to define a particular tire's width, height, aspect ratio, construction type and service description. See the "Tire Size Code" illustration later in this section for more detail.

(B) TPC Spec (Tire Performance Criteria Specification): Original equipment tires designed to GM's specific tire performance criteria have a TPC specification code molded onto the sidewall. GM's TPC specifications meet or exceed all federal safety guidelines.

(C) DOT (Department of Transportation): The Department of Transportation (DOT) code indicates that the tire is in compliance with the U.S. Department of Transportation Motor Vehicle Safety Standards.

(D) TIN (Tire Identification Number): The letters and numbers following DOT code are the Tire Identification Number (TIN). The TIN shows the manufacturer and plant code, tire size, and date the tire was manufactured. The TIN is molded onto both sides of the tire, although only one side may have the date of manufacture.

(E) Tire Ply Material: The type of cord and number of plies in the sidewall and under the tread.

(F) UTQG (Uniform Tire Quality Grading): Tire manufacturers are required to grade tires based on three performance factors: treadwear, traction and temperature resistance. For more information, see *Uniform Tire Quality Grading on page 5-69*.

(G) Maximum Cold Inflation Load Limit: Maximum load that can be carried and the maximum pressure needed to support that load. For information on recommended tire pressure see *Inflation - Tire Pressure on page 5-64* and *Loading Your Vehicle on page 4-52*.

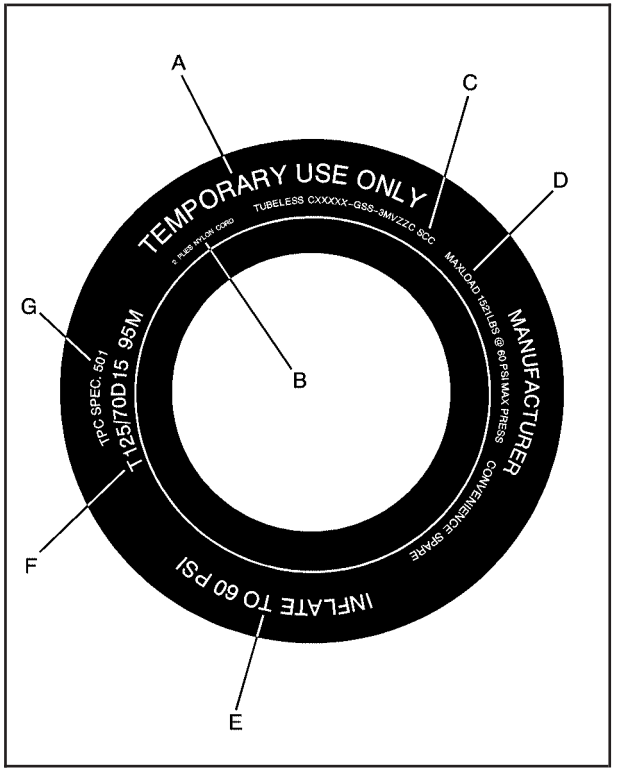

Compact Spare Tire Example

(A) Temporary Use Only: The compact spare tire or temporary use tire has a tread life of approximately 3,000 miles (5 000 km) and should not be driven at speeds over 65 mph (105 km/h). The compact spare tire is for emergency use when a regular road tire has lost air and gone flat. See “Compact Spare Tire” under *Spare Tire on page 5-93* and *If a Tire Goes Flat on page 5-73*.

(B) Tire Ply Material: The type of cord and number of plies in the sidewall and under the tread.

(C) TIN (Tire Identification Number): The Tire Identification Number (TIN). The TIN shows the manufacturer and plant code, tire size, and date the tire was manufactured. The TIN is molded onto both sides of the tire, although only one side may have the date of manufacture.

(D) Maximum Cold Inflation Load Limit: Maximum load that can be carried and the maximum pressure needed to support that load. See *Loading Your Vehicle on page 4-52*.

(E) Tire Inflation: The temporary use tire or compact spare tire should be inflated to 60 psi (420 kPa). For more information on tire pressure and inflation see *Inflation - Tire Pressure on page 5-64*.

(F) Tire Size: A combination of letters and numbers define a tire's width, height, aspect ratio, construction type and service description. The letter "T" as the first character in the tire size means the tire is for temporary use only.

(G) TPC Spec (Tire Performance Criteria Specification): Original equipment tires designed to GM's specific tire performance criteria have a TPC specification code molded onto the sidewall. GM's TPC specifications meet or exceed all federal safety guidelines.

Tire Size

The following examples show the different parts of a tire size.

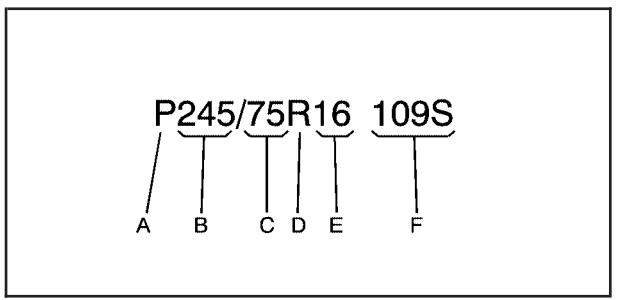

Passenger (P-Metric) Tire

(A) Passenger (P-Metric) Tire: The United States version of a metric tire sizing system. The letter P as the first character in the tire size means a passenger vehicle tire engineered to standards set by the U.S. Tire and Rim Association.

(B) Tire Width: The three-digit number indicates the tire section width in millimeters from sidewall to sidewall.

(C) Aspect Ratio: A two-digit number that indicates the tire height-to-width measurements. For example, if the tire size aspect ratio is 75, as shown in item C of the illustration, it would mean that the tire's sidewall is 75% as high as it is wide.

(D) Construction Code: A letter code is used to indicate the type of ply construction in the tire. The letter R means radial ply construction; the letter D means diagonal or bias ply construction; and the letter B means belted-bias ply construction.

(E) Rim Diameter: Diameter of the wheel in inches.

(F) Service Description: The service description indicates the load range and speed rating of a tire. The load index can range from 1 to 279. Speed ratings range from A to Z.

Tire Terminology and Definitions

Air Pressure: The amount of air inside the tire pressing outward on each square inch of the tire. Air pressure is expressed in pounds per square inch (psi) or kilopascal (kPa).

Accessory Weight: This means the combined weight of optional accessories. Some examples of optional accessories are, automatic transmission, power steering, power brakes, power windows, power seats, and air conditioning.

Aspect Ratio: The relationship of a tire's height to its width.

Belt: A rubber coated layer of cords that is located between the plies and the tread. Cords may be made from steel or other reinforcing materials.

Bead: The tire bead contains steel wires wrapped by steel cords that hold the tire onto the rim.

Bias Ply Tire: A pneumatic tire in which the plies are laid at alternate angles less than 90 degrees to the centerline of the tread.

Cold Inflation Pressure: The amount of air pressure in a tire, measured in pounds per square inch (psi) or kilopascals (kPa) before a tire has built up heat from driving. See *Inflation - Tire Pressure on page 5-64*.

Curb Weight: This means the weight of a motor vehicle with standard and optional equipment including the maximum capacity of fuel, oil and coolant, but without passengers and cargo.

DOT Markings: A code molded into the sidewall of a tire signifying that the tire is in compliance with the U.S. Department of Transportation motor vehicle safety standards. The DOT code includes the Tire Identification Number (TIN), an alphanumeric designator which can also identify the tire manufacturer, production plant, brand and date of production.

GVWR: Gross Vehicle Weight Rating, see *Loading Your Vehicle on page 4-52*.

GAWR FRT: Gross Axle Weight Rating for the front axle, see *Loading Your Vehicle on page 4-52*.

GAWR RR: Gross Axle Weight Rating for the rear axle, see *Loading Your Vehicle on page 4-52*.

Intended Outboard Sidewall: The side of an asymmetrical tire, that must always face outward when mounted on a vehicle.

Kilopascal (kPa): The metric unit for air pressure. There are 6.9 kPa's to one psi.

Light Truck (LT-Metric) Tire: A tire used on light duty trucks and some multipurpose passenger vehicles.

Load Index: An assigned number ranging from 1 to 279 that corresponds to the load carrying capacity of a tire.

Maximum Inflation Pressure: The maximum air pressure to which a cold tire may be inflated. The maximum air pressure is molded onto the sidewall.

Maximum Load Rating: The load rating for a tire at the maximum permissible inflation pressure for that tire.

Maximum Loaded Vehicle Weight: The sum of curb weight; accessory weight; vehicle capacity weight; and production options weight.

Normal Occupant Weight: The number of occupants a vehicle is designed to seat multiplied by 150 pounds (68 kg). See *Loading Your Vehicle on page 4-52*.

Occupant Distribution: Designated seating positions.

Outward Facing Sidewall: The side of a asymmetrical tire that has a particular side that faces outward when mounted on a vehicle. The side of the tire that contains a whitewall, bears white lettering or bears manufacturer, brand and or model name molding that is higher or deeper than the same moldings on the other sidewall of the tire.

Passenger (P-Metric) Tire: A tire used on passenger cars and some light duty trucks and multipurpose vehicles.

Recommended Inflation Pressure: Vehicle manufacturer's recommended tire inflation pressure and shown on the tire placard. See *Inflation - Tire Pressure on page 5-64* and *Loading Your Vehicle on page 4-52*.

Radial Ply tire: A pneumatic tire in which the ply cords that extend to the beads are laid at 90 degrees to the centerline of the tread.

Rim: A metal support for a tire and upon which the tire beads are seated.

Sidewall: The portion of a tire between the tread and the bead.

Speed Rating: An alphanumeric code assigned to a tire indicating the maximum speed at which a tire can operate.

Traction: The friction between the tire and the road surface. The amount of grip provided.

Tread: The portion of a tire that comes into contact with the road.

Treadwear Indicators: Narrow bands, sometimes called “wear bars,” that show across the tread of a tire when only 1/16 inch (1.6 mm) of tread remains. See *When It Is Time for New Tires on page 5-67*.

UTQGS: Uniform Tire Quality Grading Standards, a tire information system that provides consumers with ratings for a tire’s traction, temperature and treadwear. Ratings are determined by tire manufacturers using government testing procedures. The ratings are molded into the sidewall of the tire. See *Uniform Tire Quality Grading on page 5-69*.

Vehicle Capacity Weight: The number of designated seating positions multiplied by 150 lbs. (68 kg) plus the rated cargo load. See *Loading Your Vehicle on page 4-52*.

Vehicle Maximum Load on the Tire: Load on an individual tire due to curb weight, accessory weight, occupant weight and cargo weight.

Vehicle Placard: A label permanently attached to a vehicle showing the original equipment tire size and recommended inflation pressure. See *Loading Your Vehicle on page 4-52*.

Inflation - Tire Pressure

The tire and loading information label, shows the correct inflation pressures for your tires when they’re cold. “Cold” means your vehicle has been sitting for at least three hours or driven no more than 1 mile (1.6 km). See *Loading Your Vehicle on page 4-52*, for the location of your vehicle’s tire and loading information label.

Notice: **Don’t let anyone tell you that underinflation or overinflation is all right. It’s not. If your tires don’t have enough air (underinflation), you can get the following:**

- **Too much flexing**
- **Too much heat**
- **Tire overloading**
- **Bad wear**
- **Bad handling**
- **Bad fuel economy**

If your tires have too much air (overinflation), you can get the following:

- **Unusual wear**
- **Bad handling**
- **Rough ride**
- **Needless damage from road hazards**

When to Check

Check your tires once a month or more.

Also, check the tire pressure of the spare tire.

If you have a compact spare tire, it should be at 60 psi (420 kPa).

How to Check

Use a good quality pocket-type gage to check tire pressure. You can't tell if your tires are properly inflated simply by looking at them. Radial tires may look properly inflated even when they're underinflated. Check the tire's inflation pressure when the tires are cold. cold means your vehicle has been sitting for at least three hours or driven no more than 1 mile (1.6 km).

Remove the valve cap from the tire valve stem. Press the tire gage firmly onto the valve to get a pressure measurement. If the cold tire inflation pressure matches the recommended pressure on the tire and loading information label, no further adjustment is necessary. If the pressure is low, add air until you reach the recommended amount.

If you overfill the tire, release air by pushing on the metal stem in the center of the tire valve. Recheck the tire pressure with the tire gage.

Be sure to put the valve caps back on the valve stems. They help prevent leaks by keeping out dirt and moisture.

Tire Inspection and Rotation

Tires should be rotated every 5,000 to 8,000 miles (8 000 to 13 000 km).

Any time you notice unusual wear, rotate your tires as soon as possible and check wheel alignment. Also check for damaged tires or wheels. See *When It Is Time for New Tires on page 5-67* and *Wheel Replacement on page 5-70* for more information.

Make sure the spare tire is stored securely. Push, pull, and then try to rotate or turn the tire. If it moves, use the wheel wrench to tighten the cable. See *Changing a Flat Tire on page 5-74*.

The purpose of regular rotation is to achieve more uniform wear for all tires on the vehicle. The first rotation is the most important, see *Scheduled Maintenance on page 6-4*.

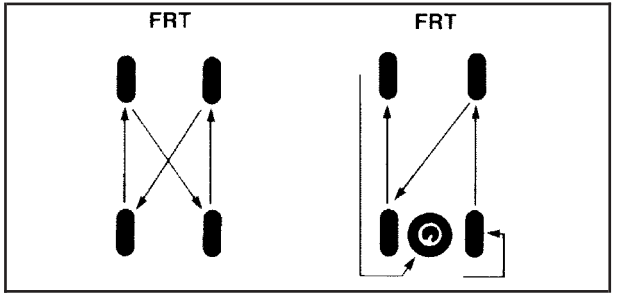

When rotating your tires, always use one of the correct rotation patterns shown here.

If your vehicle has a compact spare tire or a spare tire that does not match your vehicle's road tires and wheels, in size and type, do not include the spare in the tire rotation.

After the tires have been rotated, adjust the front and rear inflation pressures as shown on the Tire and Loading Information label. For the location of the tire and loading information label see *Loading Your Vehicle on page 4-52*. Make certain that all wheel nuts are properly tightened, see "Wheel Nut Torque" under *Capacities and Specifications on page 5-108* for the proper wheel nut torque specification.

⚠ CAUTION:

Rust or dirt on a wheel, or on the parts to which it is fastened, can make wheel nuts become loose after a time. The wheel could come off and cause an accident. When you change a wheel, remove any rust or dirt from places where the wheel attaches to the vehicle. In an emergency, you can use a cloth or a paper towel to do this; but be sure to use a scraper or wire brush later, if you need to, to get all the rust or dirt off. See "Changing a Flat Tire" in the Index.

When It Is Time for New Tires

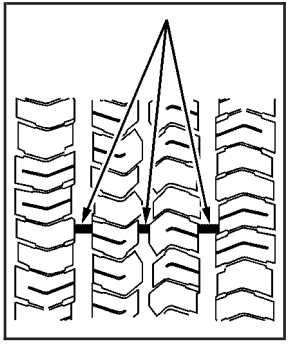

One way to tell when it's time for new tires is to check the treadwear indicators, which will appear when your tires have only 1/16 inch (1.6 mm) or less of tread remaining. Some commercial truck tires may not have treadwear indicators.

You need a new tire if any of the following statements are true:

- You can see the indicators at three or more places around the tire.
- You can see cord or fabric showing through the tire's rubber.
- The tread or sidewall is cracked, cut or snagged deep enough to show cord or fabric.
- The tire has a bump, bulge or split.
- The tire has a puncture, cut or other damage that can't be repaired well because of the size or location of the damage.

Buying New Tires

To find out what kind and size of tires you need, look at the Certification/Tire label or the Tire and Loading Information label. See *Loading Your Vehicle on page 4-52*, for examples of these labels and where they can be found on your vehicle.

The tires installed on your vehicle when it was new had a Tire Performance Criteria Specification (TPC Spec) number on each tire's sidewall. When you get new tires, GM recommends that you get tires with that same TPC Spec number. That way your vehicle will continue to have tires that are designed to give proper endurance, handling, speed rating, traction, ride and other things during normal service on your vehicle. If your tires have an all-season tread design, the TPC number will be followed by an "MS" (for mud and snow).

If you ever replace your tires with those not having a TPC Spec number, make sure they are the same size, load range, speed rating and construction type (bias, bias-belted or radial) as your original tires.

⚠ CAUTION:

Mixing tires could cause you to lose control while driving. If you mix tires of different sizes or types (radial and bias-belted tires), the vehicle may not handle properly, and you could have a crash. Using tires of different sizes may also cause damage to your vehicle. Be sure to use the same size and type tires on all wheels. It's all right to drive with your compact spare (if you have one). It was developed for use on your vehicle.

⚠ CAUTION:

If you use bias-ply tires on your vehicle, the wheel rim flanges could develop cracks after many miles of driving. A tire and/or wheel could fail suddenly, causing a crash. Use only radial-ply tires with the wheels on your vehicle.

Uniform Tire Quality Grading

Quality grades can be found where applicable on the tire sidewall between tread shoulder and maximum section width. For example:

Treadwear 200 Traction AA Temperature A

The following information relates to the system developed by the United States National Highway Traffic Safety Administration, which grades tires by treadwear, traction and temperature performance. (This applies only to vehicles sold in the United States.) The grades are molded on the sidewalls of most passenger car tires. The Uniform Tire Quality Grading system does not apply to deep tread, winter-type snow tires, space-saver or temporary use spare tires, tires with nominal rim diameters of 10 to 12 inches (25 to 30 cm), or to some limited-production tires.

While the tires available on General Motors passenger cars and light trucks may vary with respect to these grades, they must also conform to federal safety requirements and additional General Motors Tire Performance Criteria (TPC) standards.

Treadwear

The treadwear grade is a comparative rating based on the wear rate of the tire when tested under controlled conditions on a specified government test course. For example, a tire graded 150 would wear one and a half (1.5) times as well on the government course as a tire graded 100. The relative performance of tires depends upon the actual conditions of their use, however, and may depart significantly from the norm due to variations in driving habits, service practices and differences in road characteristics and climate.

Traction – AA, A, B, C

The traction grades, from highest to lowest, are AA, A, B, and C. Those grades represent the tire's ability to stop on wet pavement as measured under controlled conditions on specified government test surfaces of asphalt and concrete. A tire marked C may have poor traction performance. Warning: The traction grade assigned to this tire is based on straight-ahead braking traction tests, and does not include acceleration, cornering, hydroplaning, or peak traction characteristics.

Temperature – A, B, C

The temperature grades are A (the highest), B, and C, representing the tire's resistance to the generation of heat and its ability to dissipate heat when tested under controlled conditions on a specified indoor laboratory test wheel. Sustained high temperature can cause the material of the tire to degenerate and reduce tire life, and excessive temperature can lead to sudden tire failure. The grade C corresponds to a level of performance which all passenger car tires must meet under the Federal Motor Vehicle Safety Standard No. 109. Grades B and A represent higher levels of performance on the laboratory test wheel than the minimum required by law.

Warning: The temperature grade for this tire is established for a tire that is properly inflated and not overloaded. Excessive speed, underinflation, or excessive loading, either separately or in combination, can cause heat buildup and possible tire failure.

Wheel Alignment and Tire Balance

The wheels on your vehicle were aligned and balanced carefully at the factory to give you the longest tire life and best overall performance.

Scheduled wheel alignment and wheel balancing are not needed. However, if you notice unusual tire wear or your vehicle pulling one way or the other, the alignment may need to be reset. If you notice your vehicle vibrating when driving on a smooth road, your wheels may need to be rebalanced.

Wheel Replacement

Replace any wheel that is bent, cracked or badly rusted or corroded. If wheel nuts keep coming loose, the wheel, wheel bolts and wheel nuts should be replaced. If the wheel leaks air, replace it (except some aluminum wheels, which can sometimes be repaired). See your dealer if any of these conditions exist.

Your dealer will know the kind of wheel you need.

Each new wheel should have the same load-carrying capacity, diameter, width, offset and be mounted the same way as the one it replaces.

If you need to replace any of your wheels, wheel bolts or wheel nuts, replace them only with new GM original equipment parts. This way, you will be sure to have the right wheel, wheel bolts and wheel nuts for your vehicle.

⚠ CAUTION:

Using the wrong replacement wheels, wheel bolts or wheel nuts on your vehicle can be dangerous. It could affect the braking and handling of your vehicle, make your tires lose air and make you lose control. You could have a collision in which you or others could be injured. Always use the correct wheel, wheel bolts and wheel nuts for replacement.

Notice: **The wrong wheel can also cause problems with bearing life, brake cooling, speedometer or odometer calibration, headlamp aim, bumper height, vehicle ground clearance and tire or tire chain clearance to the body and chassis.**

See *Changing a Flat Tire on page 5-74* for more information.

Used Replacement Wheels

⚠ CAUTION:

Putting a used wheel on your vehicle is dangerous. You can't know how it's been used or how far it's been driven. It could fail suddenly and cause a crash. If you have to replace a wheel, use a new GM original equipment wheel.

Tire Chains

⚠ CAUTION:

If your vehicle has P225/75R15, P265/75R15 or P235/50R17 size tires, do not use tire chains. They can damage your vehicle because there is not enough clearance. Tire chains used on a vehicle without the proper amount of clearance can cause damage to the brakes, suspension or other vehicle parts. The area damaged by the tire chains could cause you to lose control of your vehicle and you or others may be injured in a crash.

Use another type of traction device only if its manufacturer recommends it for use on your vehicle and tire size combination and road conditions. Follow that manufacturer's instructions. To help avoid damage to your

CAUTION: (Continued)

CAUTION: (Continued)

vehicle, drive slowly, readjust or remove the device if it is contacting your vehicle, and don't spin your wheels.

If you do find traction devices that will fit, install them on the rear tires.

Notice: **If your vehicle has a tire size other than P225/75R15, P265/75R15 or P235/50R17, use tire chains only where legal and only when you must. Use chains that are the proper size for your tires. Install them on the tires of the rear axle. Do not use chains on the tires of the front axle. Tighten them as tightly as possible with the ends securely fastened. Drive slowly and follow the chain manufacturer's instructions. If you can hear the chains contacting your vehicle, stop and retighten them. If the contact continues, slow down until it stops. Driving too fast or spinning the wheels with chains on will damage your vehicle.**

If a Tire Goes Flat

It's unusual for a tire to "blowout" while you're driving, especially if you maintain your tires properly. If air goes out of a tire, it's much more likely to leak out slowly. But if you should ever have a "blowout," here are a few tips about what to expect and what to do:

If a front tire fails, the flat tire will create a drag that pulls the vehicle toward that side. Take your foot off the accelerator pedal and grip the steering wheel firmly. Steer to maintain lane position, and then gently brake to a stop well out of the traffic lane.

A rear blowout, particularly on a curve, acts much like a skid and may require the same correction you'd use in a skid. In any rear blowout, remove your foot from the accelerator pedal. Get the vehicle under control by steering the way you want the vehicle to go. It may be very bumpy and noisy, but you can still steer. Gently brake to a stop, well off the road if possible.

⚠ CAUTION:

Lifting a vehicle and getting under it to do maintenance or repairs is dangerous without the appropriate safety equipment and training. The jack provided with your vehicle is designed only for changing a flat tire. If it is used for anything else, you or others could be badly injured or killed if the vehicle slips off the jack. Use the jack provided with your vehicle only for changing a flat tire.

If a tire goes flat, the next part shows how to use your jacking equipment to change a flat tire safely.

Changing a Flat Tire

If a tire goes flat, avoid further tire and wheel damage by driving slowly to a level place. Turn on your hazard warning flashers. See *Hazard Warning Flashers on page 3-4* for more information.

⚠ CAUTION:

Changing a tire can be dangerous. The vehicle can slip off the jack and roll over or fall on you or other people. You and they could be badly injured or even killed. Find a level place to change your tire. To help prevent the vehicle from moving:

1. **Set the parking brake firmly.**
2. **Put an automatic transmission shift lever in PARK (P), or shift a manual transmission to FIRST (1) or REVERSE (R).**
3. **Turn off the engine and do not restart while the vehicle is raised.**
4. **Do not allow passengers to remain in the vehicle.**

CAUTION: (Continued)

CAUTION: (Continued)

Put the wheel blocks at the front and rear of the tire farthest away from the one being changed. That would be the tire on the other side, at the opposite end of the vehicle.

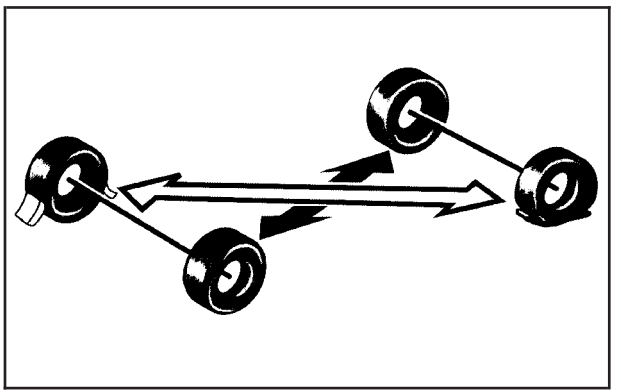

The following steps will tell you how to use the jack and change a tire.

Removing the Spare Tire and Tools

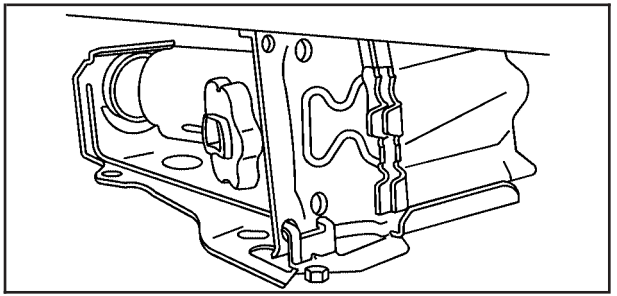

Crew Cab

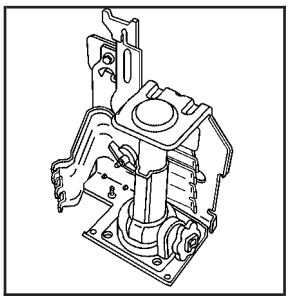

Regular and Extended Cab

The tools you will need are under the passenger's seat. For crew cab models, the jack and wheel blocks are under the driver's side rear seat. For regular and extended cab vehicles the jack and wheel blocks are located under the cover at the center of the vehicle behind the front seats.

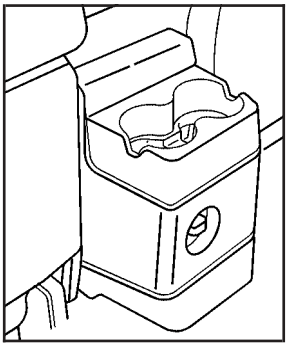

1. The vehicle will have a cover if it is an extended or regular cab.

2. Move the seats forward and turn the wing nut on the cover counterclockwise to remove it. For crew cab models, reach under the rear seat to access the jack and wheel blocks. To reinstall the jack and wheel block assembly in the mounting bracket, insert the tabs into the jack base by pushing the blocks up into the assembly. The outer hole in the jack base aligns with the tab on the bracket. When reinstalling, make sure the jack is secure, but do not overtighten the jack in the bracket.
3. The wheel blocks and the wheel block retainer can be removed by turning the wing nut counterclockwise.

   Put the wheel blocks at the front and rear of the tire farthest away from the one being changed. That would be the tire on the other side, at the opposite end of the vehicle.
4. There is also a wing nut used to retain the storage bag and tools located under the front passenger's seat. To remove it, turn the wing nut counterclockwise.

You will use the jack handle extensions and the wheel wrench to remove the underbody-mounted spare tire.

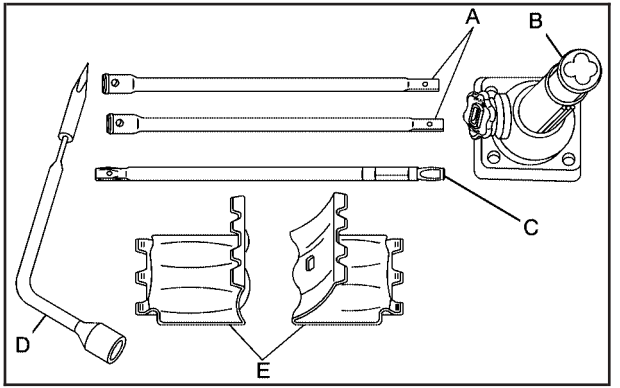

A. Jack Handle Extensions
B. Bottle Jack
C. Extension Tool
D. Wheel Wrench
E. Wheel Blocks

1. Assemble the wheel wrench (D) and the jack handle extensions (A) as shown.

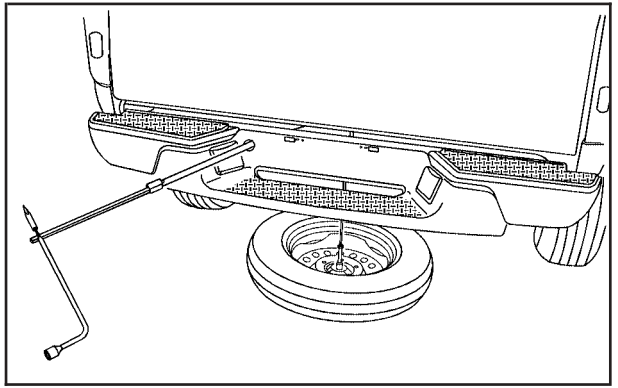

2. Insert the hoist end (chiseled end) of the extension tool through the hole in the rear bumper and into the funnel-shaped guide. The chiseled end of the extension is used to lower the spare tire.
3. Turn the wheel wrench (D) counterclockwise to lower the spare tire to the ground. Continue to turn the wheel wrench until the spare tire can be pulled out from under the vehicle.

   If the spare tire does not lower to the ground, the secondary latch is engaged causing the tire not to lower. See “Secondary Latch System” later in this section.

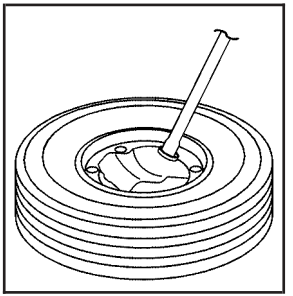

4. When the tire has been lowered, tilt the retainer and slide it up the cable so it can be pulled up through the wheel opening.
5. Put the spare tire near the flat tire.

Removing the Flat Tire and Installing the Spare Tire

Use the following pictures and instructions to remove the flat tire and raise the vehicle.

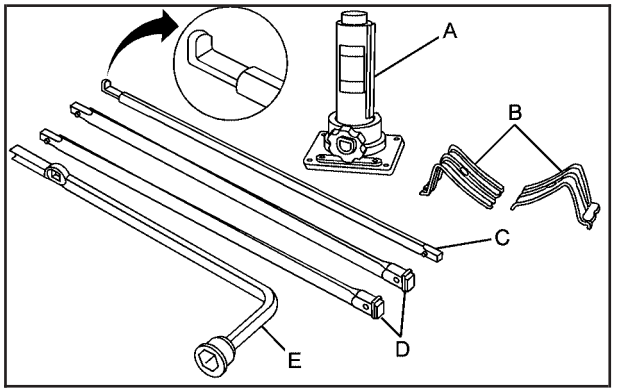

The tools you will be using include the bottle jack (A), the wheel blocks (B), the extension tool (C), the jack handle extensions (D), and the wheel wrench (E).

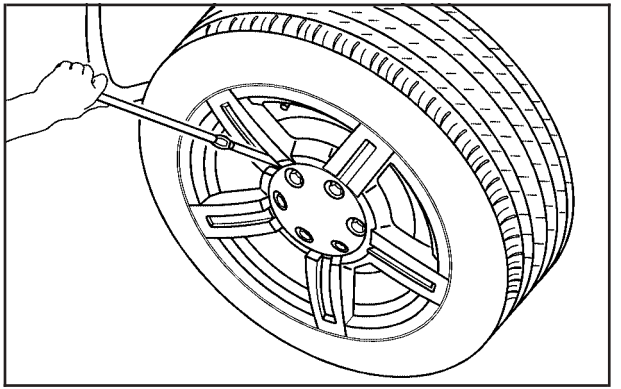

1. Remove the center cap by placing the chisel end of the wheel wrench (E) in the slot on the wheel and gently prying the cap out.

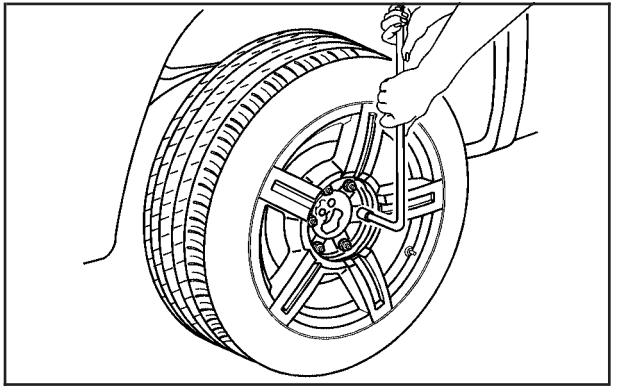

2. Use the wheel wrench to loosen all the wheel nuts. Turn the wheel wrench counterclockwise to loosen the wheel nuts. Do not remove the wheel nuts yet.

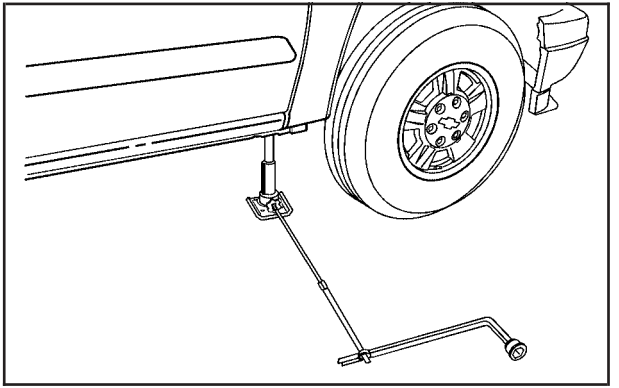

Front Location

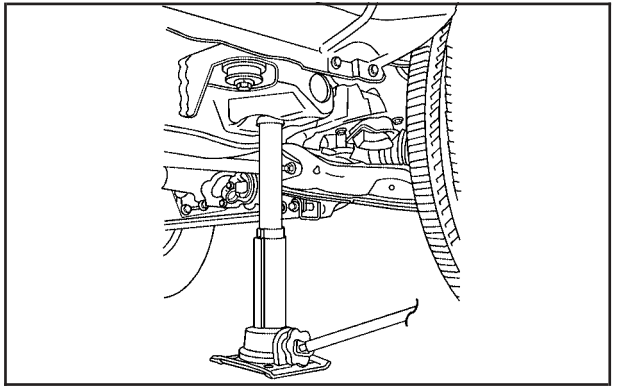

Front Location

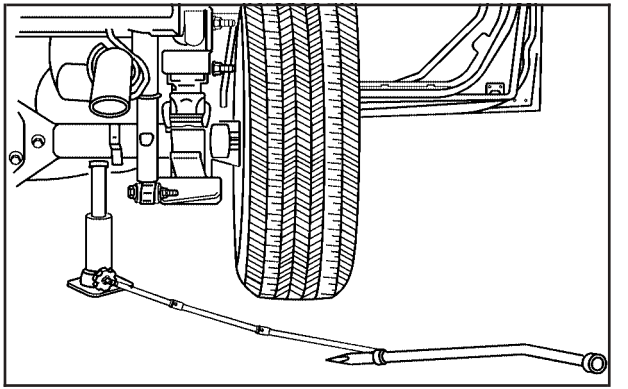

Rear Location

3. Position the jack (A) under the vehicle as shown.

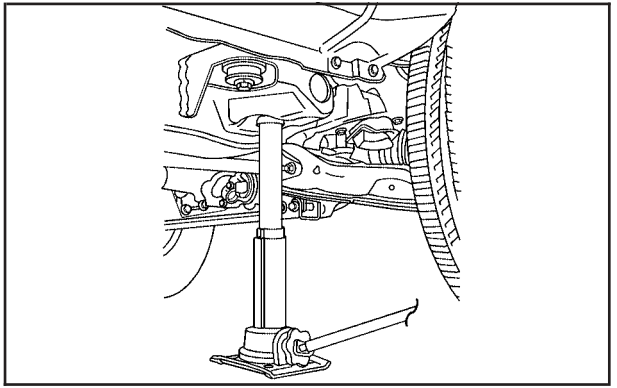

Front Location

If the flat tire is on the front of the vehicle, position the jack to the rear of the front tire in the pocket off of the frame.

If the flat tire is on the rear, position the jack under the rear axle and get as close as possible to the shock absorber.

⚠ CAUTION:

Getting under a vehicle when it is jacked up is dangerous. If the vehicle slips off the jack you could be badly injured or killed. Never get under a vehicle when it is supported only by a jack.

⚠ CAUTION:

Raising your vehicle with the jack improperly positioned can damage the vehicle and even make the vehicle fall. To help avoid personal injury and vehicle damage, be sure to fit the jack lift head into the proper location before raising the vehicle.

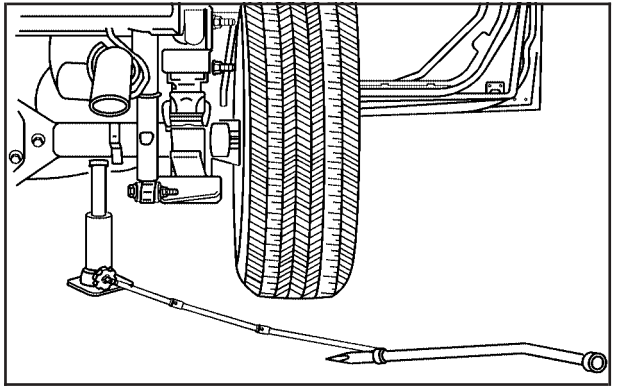

Rear Position

4. Make sure the jack head is positioned so that the rear axle is resting securely between the grooves that are on the jack head.
5. Turn the wheel wrench clockwise to raise the vehicle. Raise the vehicle far enough off the ground so there is enough room for the spare tire to fit under the wheel well.

6. Remove all the wheel nuts and take off the flat tire.

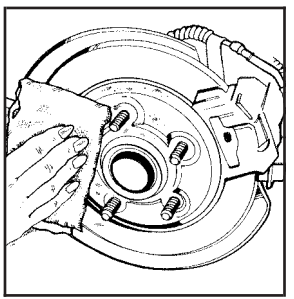

7. Remove any rust or dirt from the wheel bolts, mounting surfaces and spare wheel.

⚠ CAUTION:

Rust or dirt on the wheel, or on the parts to which it is fastened, can make the wheel nuts become loose after a time. The wheel could come off and cause an accident. When you change a wheel, remove any rust or dirt from the places where the wheel attaches to the vehicle. In an emergency, you can use a cloth or a paper towel to do this; but be sure to use a scraper or wire brush later, if you need to, to get all the rust or dirt off.

⚠ CAUTION:

Never use oil or grease on studs or nuts. If you do, the nuts might come loose. Your wheel could fall off, causing a serious accident.

8. After mounting the spare, put the wheel nuts back on with the rounded end of the nuts toward the wheel. Tighten each wheel nut by hand. Then use the wheel wrench to tighten the nuts until the wheel is held against the hub.

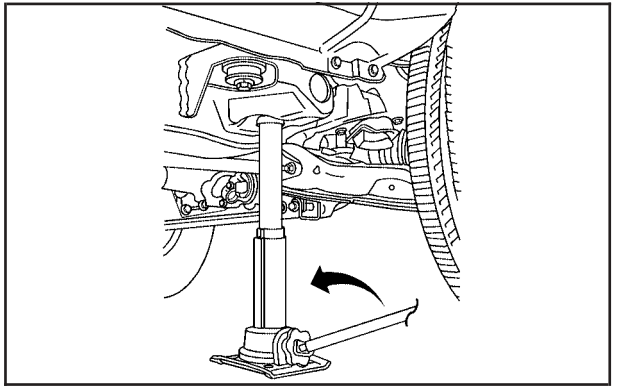

Front Position

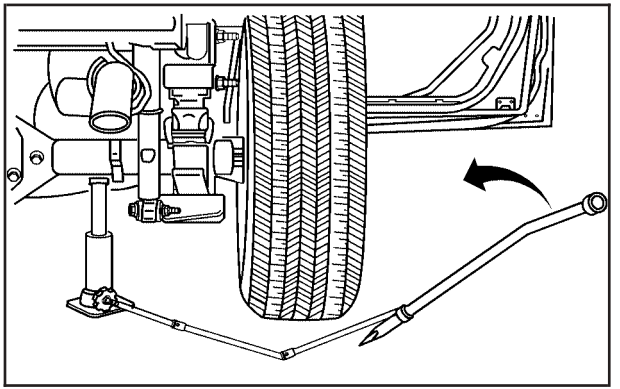

Rear Position

9. Turn the wheel wrench counterclockwise to lower the vehicle. Lower the jack completely.

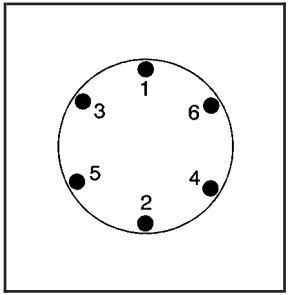

10. Tighten the wheel nuts firmly in a crisscross sequence as shown by turning the wheel wrench clockwise.

⚠ CAUTION:

Incorrect wheel nuts or improperly tightened wheel nuts can cause the wheel to come loose and even come off. This could lead to an accident. Be sure to use the correct wheel nuts. If you have to replace them, be sure to get new GM original equipment wheel nuts.

CAUTION: (Continued)

CAUTION: (Continued)

Stop somewhere as soon as you can and have the nuts tightened with a torque wrench to the proper torque specification. See “Capacities and Specifications” in the Index for wheel nut torque specification.

Notice: **Improperly tightened wheel nuts can lead to brake pulsation and rotor damage. To avoid expensive brake repairs, evenly tighten the wheel nuts in the proper sequence and to the proper torque specification. See “Capacities and Specifications” in the index for the wheel nut torque specification.**

When you reinstall the regular wheel and tire, you must also reinstall the center cap. Place the cap on the wheel and tap it into place until it seats flush with the wheel. The cap only goes on one way. Be sure to line up the tab on the center cap with the indentation on the wheel.

Storing a Flat or Spare Tire, Jack and Tools

⚠ CAUTION:

Storing a jack, a tire, or other equipment in the passenger compartment of the vehicle could cause injury. In a sudden stop or collision, loose equipment could strike someone. Store all these in the proper place.

Notice: **Storing an aluminum wheel with a flat tire under your vehicle for an extended period of time or with the valve stem pointing up may damage the wheel. Always stow the wheel with the valve stem pointing down and have the wheel/tire repaired as soon as possible.**

Store the tire under the rear of the vehicle in the spare tire carrier. Use the art and text following to help you.

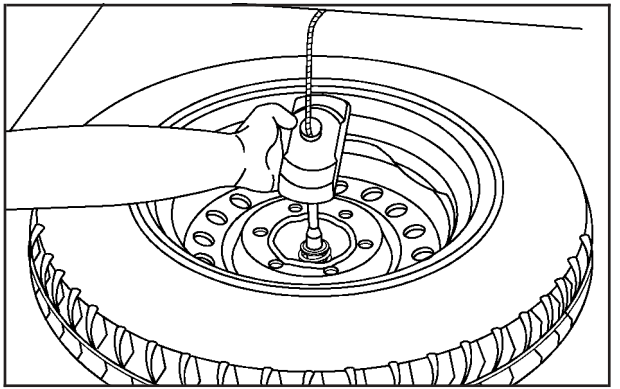

1. Put the tire on the ground at the rear of the vehicle with the valve stem pointed down.

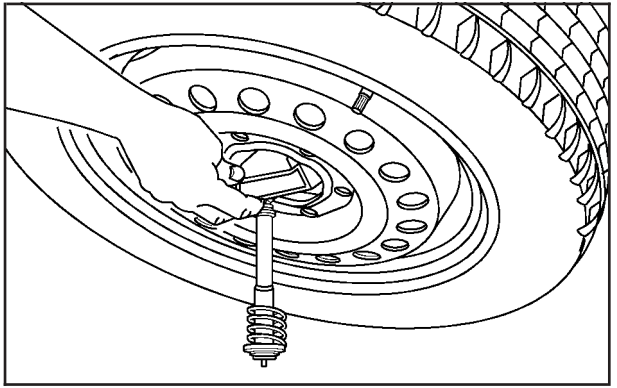

2. Tilt the retainer downward and through the wheel opening. Make sure the retainer is fully seated across the underside of the wheel.

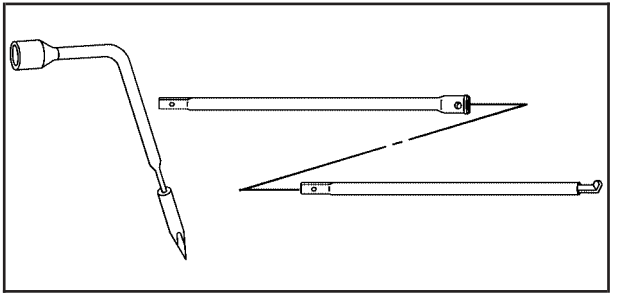

3. Attach the wheel wrench and extensions together.

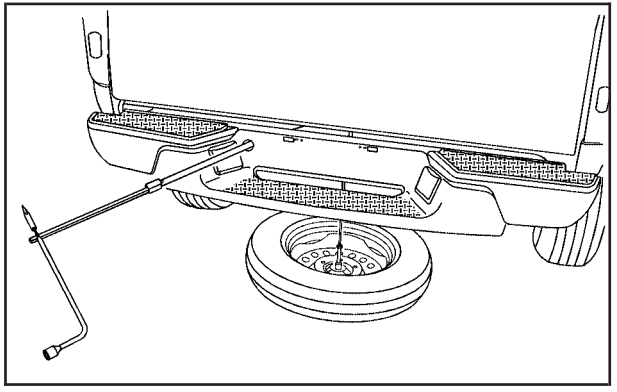

4. Insert the hoist end through the hole in the rear bumper and into the funnel-shaped guide.
5. Turn the wheel wrench clockwise to raise the tire part way up. Make sure the retainer is seated in the wheel opening and the valve stem is pointed down.
6. Raise the tire fully against the underside of the vehicle by turning the wheel wrench clockwise until you feel it skip twice. You cannot overtighten the cable.

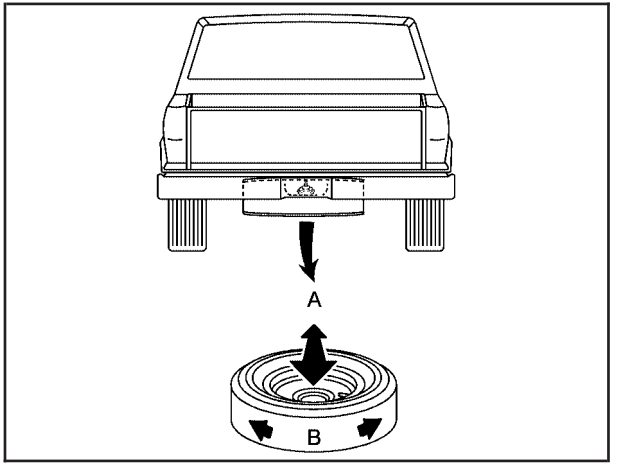

A. Push and Pull on Tire
B. Turn Tire

7. Make sure the tire is stored securely. Push, pull, and then try to turn the tire. If the tire moves, check to make sure the tire valve stem is pointing down, then use the wheel wrench to loosen and then tighten the cable.

Return the wheel wrench and jack extensions and the storage bag to the location under the front passenger's seat. Reinstall the jack and wheel blocks, be sure to install the wheel blocks first. Secure the items in the vehicle as shown.

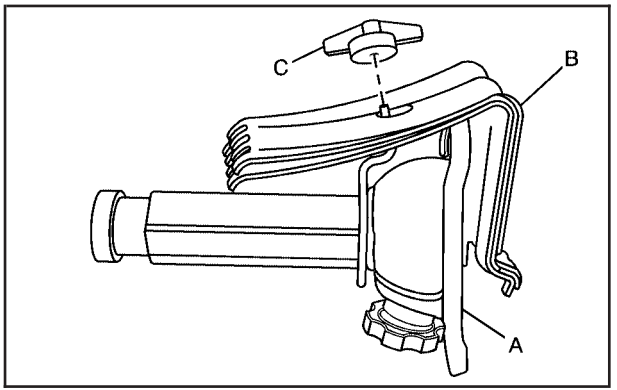

Crew Cab

A. Bottle Jack
B. Wheel Blocks
C. Wing Nut

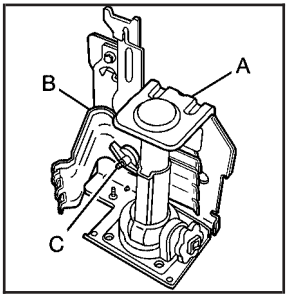

Regular and Extended Cab

A. Bottle Jack
B. Wheel Blocks
C. Wing Nut

Secondary Latch System

Your vehicle has an underbody mounted tire hoist assembly equipped with a secondary latch system. It is designed to stop the spare tire from suddenly falling off your vehicle. For the secondary latch to work, the spare must be installed with the valve stem pointing down. See “Storing a Flat or Spare Tire, Jack and Tools” earlier in this section.

⚠ CAUTION:

Before beginning this procedure read all the instructions. Failure to read and follow the instructions could damage the hoist assembly and you and others could get hurt. Read and follow the instructions listed below.

To release the spare tire from the secondary latch do the following:

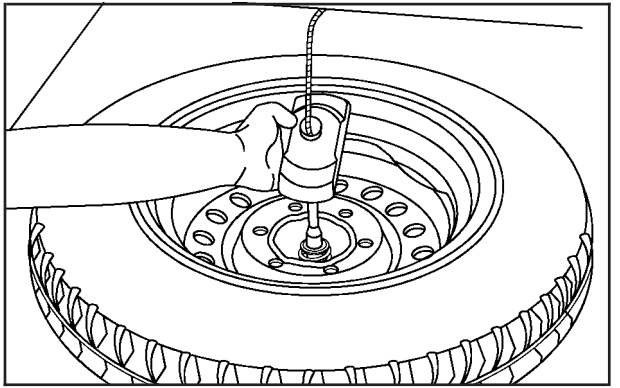

1. Check under the vehicle to see if the cable end fitting is visible.
2. If the cable end fitting is not visible proceed to Step 6.

   If it is visible, first try to tighten the cable by turning the wheel wrench clockwise until you hear two clicks or feel it skip twice. You cannot overtighten the cable.
3. Loosen the cable by turning the wheel wrench counterclockwise three or four turns.

4. Repeat this procedure at least two times. If the spare tire lowers to the ground, continue with Step 5 of “Removing the Spare Tire and Tools” earlier in this section.
5. Turn the wrench counterclockwise until approximately six inches (15 cm) of cable is exposed.

6. Stand the wheel blocks on their shortest ends, with the backs facing each other.
7. Place the bottom edge of the jack on the wheel blocks, separating them so that the jack is balanced securely.

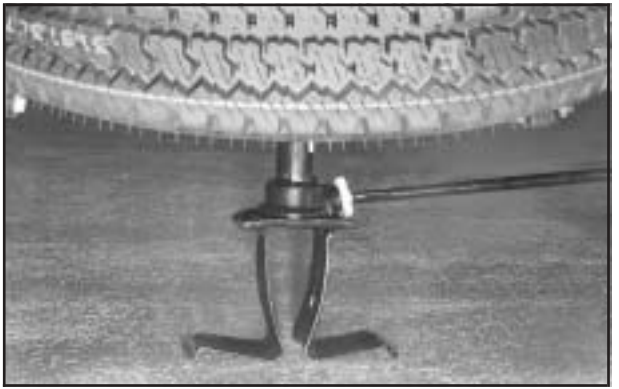

8. Attach the jack handle, extension, and wheel wrench to the jack and place it (with the wheel blocks) under the vehicle towards the front of the rear bumper. Position the center lift point of the jack under the wheel.
9. Turn the wrench clockwise to raise the jack until it lifts the tire.
10. Continue raising the jack until the tire stops moving upward and is held firmly in place. The secondary latch has released and the tire is balancing on the jack.

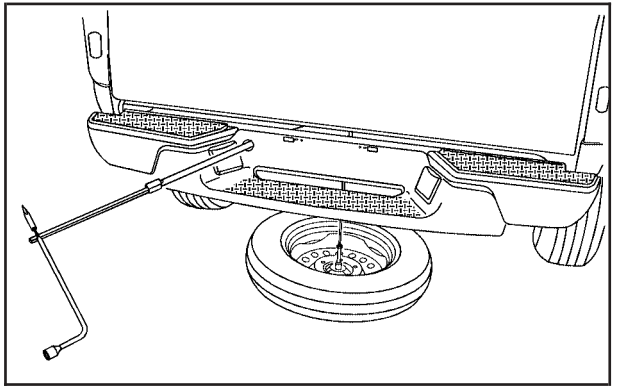

11. Remove the jack handle and insert the hoist end of the extension through the hole in the rear bumper.

    Turn the wheel counterclockwise one turn or until the wheel retainer assembly falls out.

12. Reinsert the jack handle into the jack. Lower the jack by turning the wheel wrench counterclockwise. Keep lowering the jack until the spare tire slides off the jack or is hanging by the cable.

⚠ CAUTION:

Someone standing too close during the procedure could be injured by the jack. If the spare tire does not slide off the jack completely, make sure no one is behind you or on either side of you as you pull the jack out from the spare.

13. Disconnect the jack handle from the jack and carefully remove the jack. Use one hand to push against the spare while firmly pulling the jack out from under the spare tire with the other hand.

    If the spare tire is hanging from the cable, insert the hoist handle, extension and wheel wrench into the hoist shaft hole in the bumper and turn the wheel wrench counterclockwise to lower the spare the rest of the way.

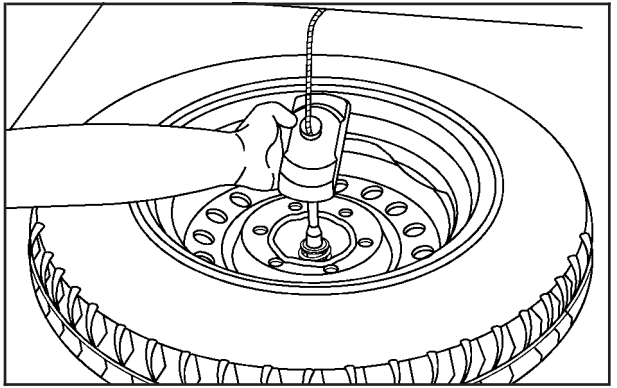

14. Tilt the tire retainer at the end of the cable and pull it through the wheel opening. Pull the tire out from under the vehicle.
15. If the cable is hanging under the vehicle, turn the wheel wrench clockwise to raise the cable back up.

Have the hoist assembly inspected as soon as you can. You will not be able to store a spare or flat tire using the hoist assembly until it has been replaced.

To continue changing the flat tire, see “Removing the Flat Tire and Installing the Spare Tire” earlier in this section.

Spare Tire

Compact Spare Tire

Your vehicle may be equipped with a compact spare tire. Although the compact spare tire was fully inflated when your vehicle was new, it can lose air after a time. Check the inflation pressure regularly. It should be 60 psi (420 kPa).

After installing the compact spare on your vehicle, you should stop as soon as possible and make sure your spare tire is correctly inflated. The compact spare is made to perform well at speeds up to 65 mph (105 km/h) for distances up to 3,000 miles (5 000 km), so you can finish your trip and have your full-size tire repaired or replaced where you want. For heavy payloads or towing, and for low traction or four-wheel-drive conditions, repair or replace the full-size tire, and reinstall for best performance. Of course, it’s best to replace your spare with a full-size tire as soon as you can. Your spare will last longer and be in good shape in case you need it again.

Notice: **When the compact spare is installed, don’t take your vehicle through an automatic car wash with guide rails. The compact spare can get caught on the rails. That can damage the tire and wheel, and maybe other parts of your vehicle.**

Don't use your compact spare on other vehicles.

And don't mix your compact spare tire or wheel with other wheels or tires. They won't fit. Keep your spare tire and its wheel together.

Notice: **Tire chains won't fit your compact spare. Using them can damage your vehicle and can damage the chains too. Don't use tire chains on your compact spare.**

Full-Size Spare Tire

Your vehicle may be equipped with a full-size spare tire, which, when new, was fully inflated. A spare tire, whether compact-size or full-size, may lose air over time, so check its inflation pressure regularly. See *Inflation - Tire Pressure on page 5-64* and *Loading Your Vehicle on page 4-52* for information regarding proper tire inflation and loading your vehicle. For instruction on how to remove, install or store a spare tire, see *Changing a Flat Tire on page 5-74*.

After installing the spare tire on your vehicle, you should stop as soon as possible and make sure the spare is correctly inflated. Have the damaged or flat road tire repaired or replaced as soon as you can and installed back onto your vehicle. This way, a spare tire will be available in case you need it again.

Don't mix tires and wheels of different sizes, because they won't fit. Keep your spare tire and its wheel together.

Appearance Care

Remember, cleaning products can be hazardous. Some are toxic. Others can burst into flames if you strike a match or get them on a hot part of the vehicle. Some are dangerous if you breathe their fumes in a closed space. When you use anything from a container to clean your vehicle, be sure to follow the manufacturer's warnings and instructions. And always open your doors or windows when you are cleaning the inside.

Never use these to clean your vehicle:

- Gasoline
- Benzene
- Naphtha
- Carbon Tetrachloride
- Acetone
- Paint Thinner
- Turpentine
- Lacquer Thinner
- Nail Polish Remover

They can all be hazardous — some more than others — and they can all damage your vehicle, too.

Do not use any of these unless this manual says you can. In many uses, these will damage your vehicle:

- Alcohol
- Laundry Soap
- Bleach
- Reducing Agents

Cleaning the Inside of Your Vehicle

Use a vacuum cleaner often to get rid of dust and loose dirt. Wipe vinyl, leather, plastic and painted surfaces with a clean, damp cloth.

Cleaning Fabric/Carpet

Your dealer has cleaners for the cleaning of fabric and carpet. They will clean normal spots and stains very well. You can get GM- approved cleaning products from your dealer. See *Vehicle Care/Appearance Materials on page 5-102*.

Here are some cleaning tips:

- Always read the instructions on the cleaner label.
- Clean up stains as soon as you can – before they set.
- Carefully scrape off any excess stain.
- Use a clean cloth or sponge, and change to a clean area often. A soft brush may be used if stains are stubborn.
- If a ring forms on fabric after spot cleaning, clean the entire area immediately or it will set.

Using Cleaner on Fabric

1. Vacuum and brush the area to remove any loose dirt.
2. Always clean a whole trim panel or section. Mask surrounding trim along stitch or welt lines.
3. Follow the directions on the container label.
4. Apply cleaner with a clean sponge. Don't saturate the material and don't rub it roughly.
5. As soon as you've cleaned the section, use a sponge to remove any excess cleaner.
6. Wipe cleaned area with a clean, water-dampened towel or cloth.
7. Wipe with a clean cloth and let dry.

Special Fabric Cleaning Problems

Stains caused by such things as catsup, coffee (black), egg, fruit, fruit juice, milk, soft drinks, vomit, urine and blood can be removed as follows:

1. Carefully scrape off excess stain, then sponge the soiled area with cool water.
2. If a stain remains, follow the cleaner instructions described earlier.
3. If an odor lingers after cleaning vomit or urine, treat the area with a water/baking soda solution: 1 teaspoon (5 ml) of baking sold to 1 cup (250 ml) of lukewarm water.
4. Let dry.

Stains caused by candy, ice cream, mayonnaise, chili sauce and unknown stains can be removed as follows:

1. Carefully scrape off excess stain.
2. First, clean with cool water and allow to dry completely.
3. If a stain remains, follow the cleaner instructions described earlier.

Cleaning Vinyl

Use warm water and a clean cloth.

- Rub with a clean, damp cloth to remove dirt. You may have to do this more than once.
- Things like tar, asphalt and shoe polish will stain if you don't get them off quickly. Use a clean cloth and vinyl cleaner. See your dealer for this product.

Cleaning Leather

Use a soft cloth with lukewarm water and a mild soap or saddle soap and wipe dry with a soft cloth. Then, let the leather dry naturally. Do not use heat to dry.

- For stubborn stains, use a leather cleaner.
- *Never* use oils, varnishes, solvent-based or abrasive cleaners, furniture polish or shoe polish on leather.
- Soiled or stained leather should be cleaned immediately. If dirt is allowed to work into the finish, it can harm the leather.

Cleaning the Top of the Instrument Panel

Use only mild soap and water to clean the top surfaces of the instrument panel. Sprays containing silicones or waxes may cause annoying reflections in the windshield and even make it difficult to see through the windshield under certain conditions.

Cleaning Interior Plastic Components

Use only a mild soap and water solution on a soft cloth or sponge. Commercial cleaners may affect the surface finish.

Cleaning Glass Surfaces

Glass should be cleaned often. GM Glass Cleaner or a liquid household glass cleaner will remove normal tobacco smoke and dust films on interior glass. See *Vehicle Care/Appearance Materials on page 5-102*.

Notice: **If you use abrasive cleaners when cleaning glass surfaces on your vehicle, you could scratch the glass and/or cause damage to the rear window defogger and the integrated radio antenna. When cleaning the glass on your vehicle, use only a soft cloth and glass cleaner.**

Care of Safety Belts

Keep belts clean and dry.

⚠ CAUTION:

Do not bleach or dye safety belts. If you do, it may severely weaken them. In a crash, they might not be able to provide adequate protection. Clean safety belts only with mild soap and lukewarm water.

Weatherstrips

Silicone grease on weatherstrips will make them last longer, seal better, and not stick or squeak. Apply silicone grease with a clean cloth at least every six months. During very cold, damp weather more frequent application may be required. See *Recommended Fluids and Lubricants on page 6-13*.

Cleaning the Outside of Your Vehicle

The paint finish on your vehicle provides beauty, depth of color, gloss retention and durability.

Washing Your Vehicle

The best way to preserve your vehicle's finish is to keep it clean by washing it often with lukewarm or cold water.

Do not wash your vehicle in the direct rays of the sun. Use a car washing soap. Do not use strong soaps or chemical detergents. Be sure to rinse the vehicle well, removing all soap residue completely. You can get GM-approved cleaning products from your dealer. See *Vehicle Care/Appearance Materials on page 5-102*. Do not use cleaning agents that are petroleum based, or that contain acid or abrasives. All cleaning agents should be flushed promptly and not allowed to dry on the surface, or they could stain. Dry the finish with a soft, clean chamois or an all-cotton towel to avoid surface scratches and water spotting.

High pressure car washes may cause water to enter your vehicle.

Cleaning Exterior Lamps/Lenses

Use only lukewarm or cold water, a soft cloth and a car washing soap to clean exterior lamps and lenses. Follow instructions under "Washing Your Vehicle."

Finish Care

Occasional waxing or mild polishing of your vehicle by hand may be necessary to remove residue from the paint finish. You can get GM-approved cleaning products from your dealer. See *Vehicle Care/Appearance Materials on page 5-102*.

Your vehicle has a "basecoat/clearcoat" paint finish. The clearcoat gives more depth and gloss to the colored basecoat. Always use waxes and polishes that are non-abrasive and made for a basecoat/clearcoat paint finish.

Notice: **Machine compounding or aggressive polishing on a basecoat/clearcoat paint finish may damage it. Use only non-abrasive waxes and polishes that are made for a basecoat/clearcoat paint finish on your vehicle.**

Foreign materials such as calcium chloride and other salts, ice melting agents, road oil and tar, tree sap, bird droppings, chemicals from industrial chimneys, etc., can damage your vehicle's finish if they remain on painted surfaces. Wash the vehicle as soon as possible. If necessary, use non-abrasive cleaners that are marked safe for painted surfaces to remove foreign matter.

Exterior painted surfaces are subject to aging, weather and chemical fallout that can take their toll over a period of years. You can help to keep the paint finish looking new by keeping your vehicle garaged or covered whenever possible.

Protecting Exterior Bright Metal Parts

Bright metal parts should be cleaned regularly to keep their luster. Washing with water is all that is usually needed. However, you may use chrome polish on chrome or stainless steel trim, if necessary.

Use special care with aluminum trim. To avoid damaging protective trim, never use auto or chrome polish, steam or caustic soap to clean aluminum. A coating of wax, rubbed to high polish, is recommended for all bright metal parts.

Cleaning the Windshield and Wiper Blades

If the windshield is not clear after using the windshield washer, or if the wiper blade chatters when running, wax, sap or other material may be on the blade or windshield.

Clean the outside of the windshield with a full-strength glass cleaning liquid. The windshield is clean if beads do not form when you rinse it with water.

Grime from the windshield will stick to the wiper blades and affect their performance. Clean the blade by wiping vigorously with a cloth soaked in full-strength windshield washer solvent. Then rinse the blade with water.

Check the wiper blades and clean them as necessary; replace blades that look worn.

Cleaning Aluminum Wheels

Keep your wheels clean using a soft clean cloth with mild soap and water. Rinse with clean water. After rinsing thoroughly, dry with a soft clean towel. A wax may then be applied.

The surface of these wheels is similar to the painted surface of your vehicle. Do not use strong soaps, chemicals, abrasive polishes, abrasive cleaners, cleaners with acid, or abrasive cleaning brushes on them because you could damage the surface. Do not use chrome polish on aluminum wheels.

Do not take your vehicle through an automatic car wash that has silicone carbide tire cleaning brushes. These brushes can also damage the surface of these wheels.

Cleaning Tires

To clean your tires, use a stiff brush with tire cleaner.

Notice: **Using petroleum-based tire dressing products on your vehicle may damage the paint finish and/or tires. When applying a tire dressing, always wipe off any overspray from all painted surfaces on your vehicle.**

Sheet Metal Damage

If your vehicle is damaged and requires sheet metal repair or replacement, make sure the body repair shop applies anti-corrosion material to parts repaired or replaced to restore corrosion protection.

Original manufacturer replacement parts will provide the corrosion protection while maintaining the warranty.

Finish Damage

Any stone chips, fractures or deep scratches in the finish should be repaired right away. Bare metal will corrode quickly and may develop into major repair expense.

Minor chips and scratches can be repaired with touch-up materials avaliable from your dealer. Larger areas of finish damage can be corrected in your dealer's body and paint shop.

Underbody Maintenance

Chemicals used for ice and snow removal and dust control can collect on the underbody. If these are not removed, corrosion and rust can develop on the underbody parts such as fuel lines, frame, floor pan and exhaust system even though they have corrosion protection.

At least every spring, flush these materials from the underbody with plain water. Clean any areas where mud and debris can collect. Dirt packed in close areas of the frame should be loosened before being flushed. Your dealer or an underbody car washing system can do this for you.

Chemical Paint Spotting

Some weather and atmospheric conditions can create a chemical fallout. Airborne pollutants can fall upon and attack painted surfaces on your vehicle. This damage can take two forms: blotchy, ring-shaped discolorations, and small, irregular dark spots etched into the paint surface.

Although no defect in the paint job causes this, GM will repair, at no charge to the owner, the surfaces of new vehicles damaged by this fallout condition within 12 months or 12,000 miles (20 000 km) of purchase, whichever occurs first.

Vehicle Care/Appearance Materials

See your GM dealer for more information on purchasing the following products.

Description	Usage
Polishing Cloth Wax-Treated	Interior and exterior polishing cloth.
Tar and Road Oil Remover	Removes tar, road oil and asphalt.
Chrome Cleaner and Polish	Use on chrome or stainless steel.
White Sidewall Tire Cleaner	Removes soil and black marks from whitewalls.
Vinyl Cleaner	Cleans vinyl tops, upholstery and convertible tops.
Glass Cleaner	Removes dirt, grime, smoke and fingerprints.
Chrome and Wire Wheel Cleaner	Removes dirt and grime from chrome wheels and wire wheel covers.
Finish Enhancer	Removes dust, fingerprints, and surface contaminants. Spray on wipe off.
Swirl Remover Polish	Removes swirl marks, fine scratches and other light surface contamination.
Cleaner Wax	Removes light scratches and protects finish.
Foaming Tire Shine Low Gloss	Cleans, shines and protects in one easy step, no wiping necessary.
Wash Wax Concentrate	Medium foaming shampoo. Cleans and lightly waxes. Biodegradable and phosphate free.
Spot Lifter	Quickly and easily removes spots and stains from carpets, vinyl and cloth upholstery.
Odor Eliminator	Odorless spray odor eliminator used on fabrics, vinyl, leather and carpet.
See your General Motors parts department for these products. See *Recommended Fluids and Lubricants on page 6-13*.	

Vehicle Identification

Vehicle Identification Number (VIN)

This is the legal identifier for your vehicle. It appears on a plate in the front corner of the instrument panel, on the driver's side. You can see it if you look through the windshield from outside your vehicle. The VIN also appears on the Vehicle Certification and Service Parts labels and the certificates of title and registration.

Engine Identification

The 8th character in your VIN is the engine code. This code will help you identify your engine, specifications and replacement parts.

Service Parts Identification Label

You will find this label on the inside of the glove box. It is very helpful if you ever need to order parts. On this label, you will find the following:

- VIN
- Model designation
- Paint information
- Production options and special equipment

Be sure that this label is not removed from the vehicle.

Electrical System

Add-On Electrical Equipment

Notice: **Don't add anything electrical to your vehicle unless you check with your dealer first. Some electrical equipment can damage your vehicle and the damage wouldn't be covered by your warranty. Some add-on electrical equipment can keep other components from working as they should.**

Your vehicle has an air bag system. Before attempting to add anything electrical to your vehicle, see *Servicing Your Air Bag-Equipped Vehicle on page 1-72*.

Windshield Wiper Fuses

The windshield wiper motor is protected by a circuit breaker and a fuse. If the motor overheats due to heavy snow or ice, the wiper will stop until the motor cools. If the overload is caused by some electrical problem, be sure to get it fixed.

Power Windows and Other Power Options

Circuit breakers protect the power windows and other power accessories. When the current load is too heavy, the circuit breaker opens and closes, protecting the circuit until the problem is fixed or goes away.

Power and Heated Seat Circuit Breakers

There is a circuit breaker located underneath the driver's side front seat that controls the power and heated seat functions.

Fuses and Circuit Breakers

The wiring circuits in your vehicle are protected from short circuits by a combination of fuses and circuit breakers. This greatly reduces the chance of fires caused by electrical problems.

Look at the silver-colored band inside the fuse. If the band is broken or melted, replace the fuse. Be sure you replace a bad fuse with a new one of the identical size and rating.

If you ever have a problem on the road and do not have a spare fuse, you can borrow one that has the same amperage. Just pick some feature of your vehicle that you can get along without — like the radio or cigarette lighter — and use its fuse, if it is the correct amperage. Replace it as soon as you can.

Engine Compartment Fuse Block

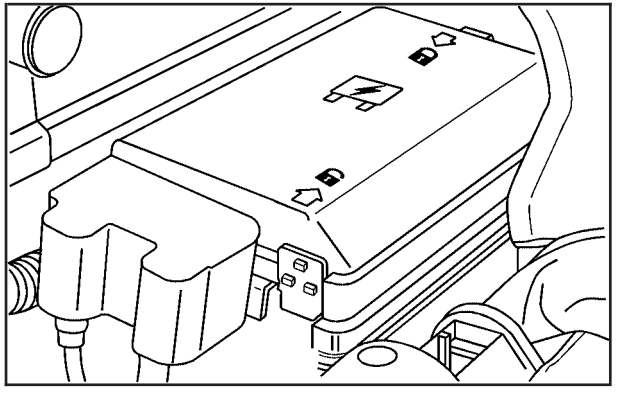

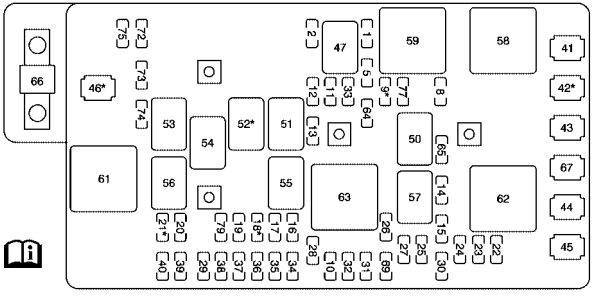

The engine compartment fuse block is located on the driver's side of the engine compartment. See *Engine Compartment Overview on page 5-12* for more information on location of the engine compartment fuse block.

To remove the cover, push in on the tab on the end of the cover and lift. To reinstall the cover, line up the tab and push down on the cover until the tab clicks into place.

Fuse	Usage
1	Brake Switch, Stoplamps
2	Auxiliary Power 1
5	Air Conditioning Control Head
8	Wiper/Washer Switch
9	Fog Lamps
10	Ignition Transducers
11	Driver's Side Headlamp
12	Passenger's Side Headlamp
13	Fuel Pump
14	Wiper

Fuse	Usage
15	Front Axle Actuator
16	Antilock Brake System (ABS), ABS module, Four-Wheel Drive, Gravity Sensor
17	Supplemental Inflatable Restraint System, Sensing and Diagnostic Module, Air Bag Off Switch
18	Heated Seat
19	Cruise Control Switch, Inside Rearview Mirror, Transfer Case Control Module, Brake Switch, Clutch Disable
20	Electronic Throttle Control (ETC)
21	Power Door Locks
22	Injectors
23	Ignition, Clutch Starter Switch, Neutral Safety Back-Up Switch, Ignition Coils 1-5, Air Conditioning Relay
24	Transmission Solenoid
25	Powertrain Control Module (PCM)
26	Back-up Lights
27	ERLS, Map Sensor, Can Purge Solenoid

Fuse	Usage
28	Rear Turn/Hazard Lights
29	Driver's Side RearTaillamp, Passenger Side Air Bag Indicator Lighting, Instrument Panel Dimming Power (2WD/4WD switch lighting)
30	Powertrain Control Module (PCM) B
31	OnStar
32	Radio
33	Auxiliary Power 2
34	Truck Body Controller
35	Horn
36	Transfer Case Control Module
37	Turn/Hazard/Courtesy/Cargo Lamps/ Mirrors
38	Cluster
39	Rear Parking Lamp 1, Passenger's Side Taillamp, License Plate Lamps
40	Front Park/Turn Lamps, Driver and Passenger's Side Power Window Switches Lighting
41	Climate Control Fan
42	Power Windows

Fuse	Usage
43	Starter Solenoid Relay
44	Antilock Brake System 2 (ABS Pump)
45	Antilock Brake System 1 (ABS Logic)
46	Power Seat Circuit Breaker/POA Seat
69	Fuel Canister Vent Solenoid
72	Not Used
73	Not Used
74	Not Used
75	Not Used
77	Air Conditioning Compressor
79	Oxygen Sensors

Relays	Usage
47	Beam Selection
50	Air Conditioning Compressor
51	Fuel Pump, Fuel Pump Fuse
52	Fog Lamps
53	Front Parking Lamp Fuse, Driver and Passenger's Taillamp Fuse, Rear Parking Lamps

Relays	Usage
54	Driver and Passenger's Headlamps Fuse
55	Horn
56	Electronic Throttle Control Fuse, Oxygen Sensor Fuse
57	Wipers (On/Off)
58	Power Window Fuse, Wiper/Washer Switch Fuse, (Retained Accessory Power Mode)
59	Ignition 3, Climate Control, Climate Control Head Fuse
61	Run/Crank, Air Bag System Fuse, Cruise Control Fuse, Ignition Fuse, Back-Up Lamps, ABS Fuse, ERLS, Front Axle, PCM-1, Injectors Fuse
62	Starter Relay (PCM Relay)
63	Wiper 2 (High/Low)

Miscellaneous	Usage
64	Diode — Wiper
65	Diode — Air Conditioning, Clutch
66	Mega Fuse
67	Not Used

Capacities and Specifications

The following approximate conversion capacities are given in English and metric conversions. See *Recommended Fluids and Lubricants on page 6-13* for more information.

Capacities and Specifications

Application	Capacities	
	English	Metric
Air Conditioning Capacity Refrigerant R-134a	1.6 lbs	1.73 kg
Cooling System		
2.8 L Engine	10.4 quarts	9.8 L
3.5 L Engine	10.6 quarts	10.0 L
Differential Fluid		
Rear Axle	3.4-3.8 pints	1.6-1.8 L
Front Axle	3.2 pints	1.5 L
Engine Oil with Filter		
2.8L	5 quarts	4.7 L
3.5L	6 quarts	5.6 L
Fuel Tank	19.5 gallons	76 L

Capacities and Specifications (cont'd)

Application	Capacities	
	English	Metric
Transmission (Drain and Refill)		
Automatic	5.0 quarts	4.7 L
Manual	2.5 quarts	2.4 L
Wheel Nut Torque	100 lb-ft	140 N•m
All capacities are approximate. When adding, be sure to fill to the appropriate level or as recommended in this manual. Recheck fluid level after filling.		

Engine Specifications

Type	VIN Code	Transmission	Spark Plug Gap
2.8L LK5	8	4L60E Automatic AR5 Manual	0.042 inches (1.07 mm)
3.5L L52	6	4L60E Automatic AR5 Manual	0.042 inches (1.07 mm)

NOTES

Section 6 Maintenance Schedule

Maintenance Schedule 6-2
Introduction 6-2
Maintenance Requirements 6-2
Your Vehicle and the Environment 6-2
Using Your Maintenance Schedule 6-3
Scheduled Maintenance 6-4
Additional Required Services 6-6
Maintenance Footnotes 6-7
Owner Checks and Services 6-9
At Each Fuel Fill 6-9
At Least Once a Month 6-9
At Least Once a Year 6-10
Recommended Fluids and Lubricants 6-13
Normal Maintenance Replacement Parts 6-15
Engine Drive Belt Routing 6-16
Maintenance Record 6-17

Maintenance Schedule

Introduction

Important: Keep engine oil at the proper level and change as recommended.

Have you purchased the GM Protection Plan? The Plan supplements your new vehicle warranties. See your Warranty and Owner Assistance booklet or your dealer for details.

Maintenance Requirements

Notice: **Maintenance intervals, checks, inspections, replacement parts and recommended fluids and lubricants as prescribed in this manual are necessary to keep your vehicle in good working condition. Any damage caused by failure to follow scheduled maintenance may not be covered by warranty.**

Your Vehicle and the Environment

Proper vehicle maintenance not only helps to keep your vehicle in good working condition, but also helps the environment. All recommended maintenance is important. Improper vehicle maintenance can even affect the quality of the air we breathe. Improper fluid levels or the wrong tire inflation can increase the level of emissions from your vehicle. To help protect our environment, and to keep your vehicle in good condition, be sure to maintain your vehicle properly.

Using Your Maintenance Schedule

We at General Motors want to help you keep your vehicle in good working condition. But we do not know exactly how you will drive it. You may drive very short distances only a few times a week. Or you may drive long distances all the time in very hot, dusty weather. You may use your vehicle in making deliveries. Or you may drive it to work, to do errands or in many other ways.

Because of all the different ways people use their vehicles, maintenance needs vary. You may need more frequent checks and replacements. So please read the following and note how you drive. If you have any questions on how to keep your vehicle in good condition, see your GM Goodwrench dealer.

This schedule is for vehicles that:

- carry passengers and cargo within recommended limits. You will find these limits on the tire and loading information label. See *Loading Your Vehicle on page 4-52*.
- are driven on reasonable road surfaces within legal driving limits.
- are driven off-road in the recommended manner. See *Off-Road Driving with Your Four-Wheel-Drive Vehicle on page 4-15*.
- use the recommended fuel. See *Gasoline Octane on page 5-5*.

The services in *Scheduled Maintenance on page 6-4* should be performed when indicated. See *Additional Required Services on page 6-6* and *Maintenance Footnotes on page 6-7* for further information.

⚠ CAUTION:

Performing maintenance work on a vehicle can be dangerous. In trying to do some jobs, you can be seriously injured. Do your own maintenance work only if you have the required know-how and the proper tools and equipment for the job. If you have any doubt, see your GM Goodwrench dealer to have a qualified technician do the work.

Some maintenance services can be complex. So, unless you are technically qualified and have the necessary equipment, you should have your GM Goodwrench dealer do these jobs.

When you go to your GM Goodwrench dealer for your service needs, you will know that GM-trained and supported service technicians will perform the work using genuine GM parts.

If you want to get service information, see *Service Publications Ordering Information on page 7-11*.

Owner Checks and Services on page 6-9 tells you what should be checked, when to check it and what you can easily do to help keep your vehicle in good condition.

The proper replacement parts, fluids and lubricants to use are listed in *Recommended Fluids and Lubricants on page 6-13* and *Normal Maintenance Replacement Parts on page 6-15*. When your vehicle is serviced, make sure these are used. All parts should be replaced and all necessary repairs done before you or anyone else drives the vehicle. We recommend the use of genuine GM parts.

Scheduled Maintenance

When the CHANGE OIL light comes on, it means that service is required for your vehicle. Have your vehicle serviced as soon as possible within the next 600 miles (1 000 km). It is possible that, if you are driving under the best conditions, the engine oil life system may not indicate that vehicle service is necessary for over a year. However, your engine oil and filter must be changed at least once a year and at this time the system must be reset. Your GM Goodwrench dealer has GM-trained service technicians who will perform this work using genuine GM parts and reset the system.

If the engine oil life system is ever reset accidentally, you must service your vehicle within 3,000 miles (5 000 km) since your last service. Remember to reset the oil life system whenever the oil is changed. See *Engine Oil on page 5-13* for information on the Engine Oil Life System and resetting the system.

When the CHANGE OIL light appears, certain services, checks and inspections are required. Required services are described in the following for “Maintenance I” and “Maintenance II.” Generally, it is recommended that your first service be Maintenance I, your second service be Maintenance II and that you alternate Maintenance I and Maintenance II thereafter. However, in some cases, Maintenance II may be required more often.

Maintenance I — Use Maintenance I if the CHANGE OIL light comes on within ten months since vehicle was purchased or Maintenance II was performed.

Maintenance II — Use Maintenance II if the previous service performed was Maintenance I. Always use Maintenance II whenever the light comes on ten months or more since the last service or if the light has not come on at all for one year.

Scheduled Maintenance

Service	Maintenance I	Maintenance II
Change engine oil and filter. Reset oil life system. See *Engine Oil on page 5-13. An Emission Control Service.*	•	•
Visually check for any leaks or damage. *See footnote (g).*	•	•
Inspect engine air cleaner filter. If necessary, replace filter. See *Engine Air Cleaner/Filter on page 5-18. An Emission Control Service. See footnote †.*	•	•
Rotate tires and check inflation pressures and wear. See *Tires on page 5-57*.	•	•
Inspect brake system. *See footnote (a).*	•	•
Check engine coolant and windshield washer fluid levels and add fluid as needed.	•	•
Perform any needed additional services. See “Additional Required Services” in this section.	•	•
Inspect suspension and steering components. *See footnote (b).*		•
Inspect engine cooling system. *See footnote (c).*		•
Inspect wiper blades. *See footnote (d).*		•
Inspect restraint system components. *See footnote (e).*		•
Lubricate body components. *See footnote (f).*		•
Check transmission fluid level and add fluid as needed.		•

Additional Required Services

The following services should be performed at the first maintenance service (I or II) after the indicated miles (kilometers) shown for each item.

Additional Required Services

Service and Miles (Kilometers)	25,000 (41 500)	50,000 (83 000)	75,000 (125 000)	100,000 (166 000)	125,000 (207 500)	150,000 (240 000)
Inspect fuel system for damage or leaks.	•	•	•	•	•	•
Replace fuel filter.	•	•	•	•	•	•
Replace engine air cleaner filter. See *Engine Air Cleaner/Filter on page 5-18*. *An Emission Control Service.*	•	•	•	•	•	•
Inspect exhaust system for loose or damaged components.	•	•	•	•	•	•
Change automatic transmission fluid and filter (severe service). *See footnote (h).*		•		•		•
Change automatic transmission fluid and filter (normal service).				•		
Replace spark plugs. *An Emission Control Service.*				•		
Engine cooling system service (or every 5 years, whichever occurs first). *An Emission Control Service.* *See footnote (i).*						•
Inspect engine accessory drive belt. *An Emission Control Service.*						•

Maintenance Footnotes

† *The U.S. Environmental Protection Agency or the California Air Resources Board has determined that the failure to perform this maintenance item will not nullify the emission warranty or limit recall liability prior to the completion of the vehicle's useful life. We, however, urge that all recommended maintenance services be performed at the indicated intervals and the maintenance be recorded.*

(a) *Visually inspect brake lines and hoses for proper hook-up, binding, leaks, cracks, chafing, etc. Inspect drum brake linings for wear or cracks. Inspect disc brake pads for wear and rotors for surface condition. Inspect other brake parts, including drums, wheel cylinders, calipers, parking brake, etc. Check parking brake adjustment.*

(b) *Visually inspect front and rear suspension and steering system for damaged, loose or missing parts or signs of wear. Inspect power steering lines and hoses for proper hook-up, binding, leaks, cracks, chafing, etc. Visually check constant velocity joints, rubber boots and axle seals for leaks.*

(c) *Visually inspect hoses and have them replaced if they are cracked, swollen or deteriorated. Inspect all pipes, fittings and clamps; replace with genuine GM parts as needed. To help ensure proper operation, a pressure test of the cooling system and pressure cap and cleaning the outside of the radiator and air conditioning condenser is recommended at least once a year.*

(d) *Visually inspect wiper blades for wear or cracking. Replace blade inserts that appear worn or damaged or that streak or miss areas of the windshield.*

(e) *Make sure the safety belt reminder light and all your belts, buckles, latch plates, retractors and anchorages are working properly. Look for any other loose or damaged safety belt system parts. If you see anything that might keep a safety belt system from doing its job, have it repaired. Have any torn or frayed safety belts replaced. Also look for any opened or broken air bag coverings, and have them repaired or replaced. (The air bag system does not need regular maintenance.)*

(f) *Lubricate all key lock cylinders, body door and fuel door hinges, latches and locks (including glove box and console doors), hood latch assembly, secondary latch, pivots, spring anchor, release pawl and any moving seat hardware. Lubricate hood safety lever pivot and prop rod pivot and tailgate latch bolt, handle assembly pivot points and hinges. More frequent lubrication may be required when exposed to a corrosive environment. Applying silicone grease on weatherstrips with a clean cloth will make them last longer, seal better and not stick or squeak.*

(g) *A fluid loss in any vehicle system could indicate a problem. Have the system inspected and repaired and the fluid level checked. Add fluid if needed.*

(h) *Change automatic transmission fluid and filter if the vehicle is mainly driven under one or more of these conditions:*

- *In heavy city traffic where the outside temperature regularly reaches 90°F (32°C) or higher.*
- *In hilly or mountainous terrain.*
- *When doing frequent trailer towing.*
- *Uses such as found in taxi, police or delivery service.*

(i) *Drain, flush and refill cooling system. See Engine Coolant on page 5-25* for what to use. Inspect hoses. Clean radiator, condenser, pressure cap and filler neck. Pressure test the cooling system and pressure cap.

Owner Checks and Services

These owner checks and services should be performed at the intervals specified to help ensure the safety, dependability and emission control performance of your vehicle. Your GM Goodwrench dealer can assist you with these checks and services.

Be sure any necessary repairs are completed at once. Whenever any fluids or lubricants are added to your vehicle, make sure they are the proper ones, as shown in *Recommended Fluids and Lubricants on page 6-13*.

At Each Fuel Fill

It is important to perform these underhood checks at each fuel fill.

Engine Oil Level Check

Check the engine oil level and add the proper oil if necessary. See *Engine Oil on page 5-13* for further details.

Notice: **It is important to check your oil regularly and keep it at the proper level. Failure to keep your engine oil at the proper level can cause damage to your engine not covered by your warranty.**

Engine Coolant Level Check

Check the engine coolant level and add DEX-COOL® coolant mixture if necessary. See *Engine Coolant on page 5-25* for further details.

Windshield Washer Fluid Level Check

Check the windshield washer fluid level in the windshield washer tank and add the proper fluid if necessary.

At Least Once a Month

Tire Inflation Check

Visually inspect your tires and make sure tires are inflated to the correct pressures. Do not forget to check your spare tire. See *Tires on page 5-57* for further details. Check to make sure the spare tire is stored securely. Push, pull and then try to rotate or turn the spare tire. If it moves, tighten it. See *Changing a Flat Tire on page 5-74*.

At Least Once a Year

Starter Switch Check

⚠ CAUTION:

When you are doing this inspection, the vehicle could move suddenly. If the vehicle moves, you or others could be injured.

1. Before you start, be sure you have enough room around the vehicle.
2. Firmly apply both the parking brake and the regular brake. See *Parking Brake on page 2-29* if necessary.

   Do not use the accelerator pedal, and be ready to turn off the engine immediately if it starts.
3. On automatic transmission vehicles, try to start the engine in each gear. The starter should work only in PARK (P) or NEUTRAL (N). If the starter works in any other position, contact your GM Goodwrench dealer for service.

   On manual transmission vehicles, put the shift lever in NEUTRAL (N), push the clutch down halfway and try to start the engine. The starter should work only when the clutch is pushed down all the way to the floor. If the starter works when the clutch is not pushed all the way down, contact your GM Goodwrench dealer for service.

Automatic Transmission Shift Lock Control System Check

⚠ CAUTION:

When you are doing this inspection, the vehicle could move suddenly. If the vehicle moves, you or others could be injured.

1. Before you start, be sure you have enough room around the vehicle. It should be parked on a level surface.
2. Firmly apply the parking brake. See *Parking Brake on page 2-29* if necessary.

   Be ready to apply the regular brake immediately if the vehicle begins to move.
3. With the engine off, turn the key to the ON position, but do not start the engine. Without applying the regular brake, try to move the shift lever out of PARK (P) with normal effort. If the shift lever moves out of PARK (P), contact your GM Goodwrench dealer for service.

Ignition Transmission Lock Check

While parked, and with the parking brake set, try to turn the ignition key to LOCK in each shift lever position.

- With an automatic transmission, the key should turn to LOCK only when the shift lever is in PARK (P). The key should come out only in LOCK.
- With a manual transmission, the key should come out only in LOCK.

Contact your GM Goodwrench dealer if service is required.

Parking Brake and Automatic Transmission Park (P) Mechanism Check

⚠ CAUTION:

When you are doing this check, your vehicle could begin to move. You or others could be injured and property could be damaged. Make sure there is room in front of your vehicle in case it begins to roll. Be ready to apply the regular brake at once should the vehicle begin to move.

Park on a fairly steep hill, with the vehicle facing downhill. Keeping your foot on the regular brake, set the parking brake.

- To check the parking brake's holding ability: With the engine running and transmission in NEUTRAL (N), slowly remove foot pressure from the regular brake pedal. Do this until the vehicle is held by the parking brake only.
- To check the PARK (P) mechanism's holding ability: With the engine running, shift to PARK (P). Then release the parking brake followed by the regular brake.

Contact your GM Goodwrench dealer if service is required.

Underbody Flushing Service

At least every spring, use plain water to flush any corrosive materials from the underbody. Take care to clean thoroughly any areas where mud and other debris can collect.

Recommended Fluids and Lubricants

Fluids and lubricants identified below by name, part number or specification may be obtained from your dealer.

Usage	Fluid/Lubricant
Engine Oil	Engine oil which meets GM Standard GM6094M and displays the American Petroleum Institute Certified for Gasoline Engines starburst symbol. To determine the proper viscosity for your vehicle's engine, see *Engine Oil on page 5-13*.
Engine Coolant	50/50 mixture of clean, drinkable water and use only DEX-COOL® Coolant. See *Engine Coolant on page 5-25*.
Hydraulic Brake System	Delco Supreme 11 Brake Fluid or equivalent DOT-3 brake fluid.
Windshield Washer Solvent	GM Optikleen® Washer Solvent.

Usage	Fluid/Lubricant
Parking Brake Cable Guides	Chassis Lubricant (GM Part No. U.S. 12377985, in Canada 88901242) or lubricant meeting requirements of NLGI #2, Category LB or GC-LB.
Power Steering System	GM Power Steering Fluid (GM Part No. U.S. 89021184, in Canada 89021186).
Automatic Transmission	DEXRON®-III Automatic Transmission Fluid.
Manual Transmission	Manual Transmission Fluid (GM Part No. U.S. 89021806, in Canada 89021807).
Hydraulic Clutch System	Hydraulic Clutch Fluid (GM Part No. U.S. 12345347, in Canada 10953517) or equivalent DOT-3 brake fluid.
Key Lock Cylinders	Multi-Purpose Lubricant, Superlube (GM Part No. U.S. 12346241, in Canada 10953474).
Chassis Lubrication	Chassis Lubricant (GM Part No. U.S. 12377985, in Canada 88901242) or lubricant meeting requirements of NLGI #2, Category LB or GC-LB.

Usage	Fluid/Lubricant
Front and Rear Axle	SAE 75W-90 Synthetic Axle Lubricant (GM Part No. U.S. 12378261, in Canada 10953455) meeting GM Specification 9986115.
Transfer Case	Synchromesh Transmission Fluid (GM Part No. U.S. 12345349, in Canada 10953465).
Rear Driveline Center Spline and Universal Joints	Chassis Lubricant (GM Part No. U.S. 12377985, in Canada 88901242) or lubricant meeting requirements of NLGI #2, Category LB or GC-LB.
Constant Velocity Universal Joint	Chassis Lubricant (GM Part No. U.S. 12377985, in Canada 88901242) or lubricant meeting requirements of NLGI #2, Category LB or GC-LB.
Hood Latch Assembly, Secondary Latch, Pivots, Spring Anchor and Release Pawl	Lubriplate Lubricant Aerosol (GM Part No. U.S. 12346293, in Canada 992723) or lubricant meeting requirements of NLGI #2, Category LB or GC-LB.

Usage	Fluid/Lubricant
Hood and Door Hinges, Body Door Hinge Pins, Liftgate Hinge and Linkage, Folding Seats and Fuel Door Hinge	Multi-Purpose Lubricant, Superlube (GM Part No. U.S. 12346241, in Canada 10953474).
Outer Tailgate Handle Pivot Points and Hinges	Multi-Purpose Lubricant, Superlube (GM Part No. U.S. 12346241, in Canada 10953474).
Weatherstrip Conditioning	Dielectric Silicone Grease (GM Part No. U.S. 12345579, in Canada 992887).
Weatherstrip Squeaks	Synthetic Grease with Teflon, Superlube (GM Part No. U.S. 12371287, in Canada 10953437).

Normal Maintenance Replacement Parts

Replacement parts identified below by name, part number, or specification can be obtained from your dealer.

Part	GM Part Number	ACDelco® Part Number
Transmission Filter Kit Automatic	24225323	—
Engine Air Cleaner/Filter	15202408	—
Engine Oil Filter 2.8 L Engine 3.5 L Engine	88984215 89017342	PF46 PF61
Fuel Filter	25121468	GF580
Spark Plugs	25337472	41-981

Windshield Wiper Blades	GM Part Number
Driver's Side	15169017
Passenger's Side	15169018
Wiper Blade Length – Driver's	22 inches (55 cm)
Wiper Blade Length – Passenger's	19 inches (48 cm)

Engine Drive Belt Routing

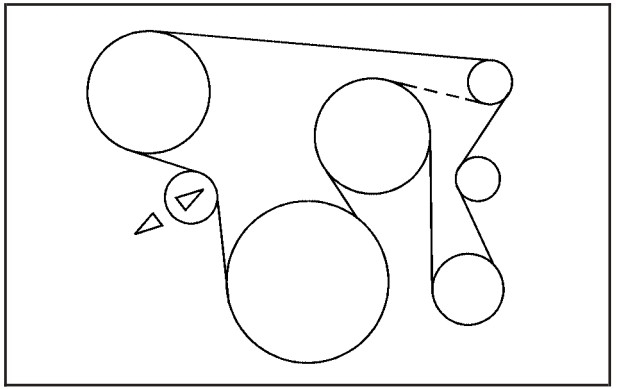

Maintenance Record

After the scheduled services are performed, record the date, odometer reading, who performed the service and the type of services performed in the boxes provided. See *Maintenance Requirements on page 6-2* in this section. Any additional information from *Owner Checks and Services on page 6-9* can be added on the following record pages. Also, you should retain all maintenance receipts.

Maintenance Record

Date	Odometer Reading	Serviced By	Maintenance I or Maintenance II	Services Performed

Maintenance Record (cont'd)

Date	Odometer Reading	Serviced By	Maintenance I or Maintenance II	Services Performed

Section 7 Customer Assistance and Information

Customer Assistance and Information 7-2
Customer Satisfaction Procedure 7-2
Online Owner Center 7-3
Customer Assistance for Text Telephone (TTY) Users 7-4
Customer Assistance Offices 7-4
GM Mobility Program for Persons with Disabilities 7-5
Roadside Assistance Program 7-6
Courtesy Transportation 7-7
Vehicle Data Collection and Event Data Recorders 7-9
Reporting Safety Defects 7-10
Reporting Safety Defects to the United States Government 7-10
Reporting Safety Defects to the Canadian Government 7-11
Reporting Safety Defects to General Motors 7-11
Service Publications Ordering Information 7-11

Customer Assistance and Information

Customer Satisfaction Procedure

Your satisfaction and goodwill are important to your dealer and to GMC. Normally, any concerns with the sales transaction or the operation of your vehicle will be resolved by your dealer's sales or service departments. Sometimes, however, despite the best intentions of all concerned, misunderstandings can occur. If your concern has not been resolved to your satisfaction, the following steps should be taken:

STEP ONE: Discuss your concern with a member of dealership management. Normally, concerns can be quickly resolved at that level. If the matter has already been reviewed with the sales, service or parts manager, contact the owner of the dealership or the general manager.

STEP TWO: If after contacting a member of dealership management, it appears your concern cannot be resolved by the dealership without further help, contact the GMC Consumer Relations Manager by calling 1-800-GMC-8782 (1-800-462-8782, Customer Assistance prompt). In Canada, contact GM of Canada Customer Communication Centre in Oshawa by calling 1-800-263-3777 (English) or 1-800-263-7854 (French).

We encourage you to call the toll-free number in order to give your inquiry prompt attention. Please have the following information available to give the Customer Assistance Representative:

- Vehicle Identification Number (This is available from the vehicle registration or title, or the plate at the top left of the instrument panel and visible through the windshield.)
- Dealership name and location
- Vehicle delivery date and present mileage

When contacting GMC, please remember that your concern will likely be resolved at a dealer's facility. That is why we suggest you follow Step One first if you have a concern.

STEP THREE: Both General Motors and your dealer are committed to making sure you are completely satisfied with your new vehicle. However, if you continue to remain unsatisfied after following the procedure outlined in Steps One and Two, you should file with the BBB Auto Line Program to enforce any additional rights you may have. Canadian owners refer to your Warranty and Owner Assistance Information booklet for information on the Canadian Motor Vehicle Arbitration Plan (CAMVAP).

The BBB Auto Line Program is an out of court program administered by the Council of Better Business Bureaus to settle automotive disputes regarding vehicle repairs or the interpretation of the New Vehicle Limited Warranty. Although you may be required to resort to this informal dispute resolution program prior to filling out a court action, use of the program is free of charge and your case will generally be heard within 40 days. If you do not agree with the decision given in your case, you may reject it and proceed with any other venue for relief available to you.

You may contact the BBB Auto Line Program using the toll-free telephone number or write them at the following address:

BBB Auto Line Program
Council of Better Business Bureaus, Inc.
4200 Wilson Boulevard
Suite 800
Arlington, VA 22203-1804

Telephone: 1-800-955-5100

This program is available in all 50 states and the District of Columbia. Eligibility is limited by vehicle age, mileage and other factors. General Motors reserves the right to change eligibility limitations and/or discontinue its participation in this program.

Online Owner Center

The Owner Center is a resource for your GM ownership needs. You can find your specific vehicle information all in one place.

The Owner Center allows you to:

- Get e-mail service reminders.
- Access information about your specific vehicle, including tips and videos and an electronic version of this owner's manual. (United States only)
- Keep track of your vehicle's service history and maintenance schedule.
- Find GM dealers for service nationwide.
- Receive special promotions and privileges only available to members. (United States only)

Refer to the web for updated information.

To register your vehicle, visit www.MyGMLink.com. (United States) or My GM Canada within www.gmcanada.com (Canada).

Customer Assistance for Text Telephone (TTY) Users

To assist customers who are deaf, hard of hearing, or speech-impaired and who use the Text Telephones (TTYs), GMC has TTY equipment available at its Customer Assistance Center. Any TTY user can communicate with GMC by dialing: 1-800-GMC-8583 (462-8583). (TTY users in Canada can dial 1-800-263-3830.)

Customer Assistance Offices

GMC encourages customers to call the toll-free number for assistance. If a U.S. customer wishes to write to GMC, the letter should be addressed to GMC's Customer Assistance Center.

United States

Pontiac-GMC Customer Assistance Center
P.O. Box 33172
Detroit, MI 48232-5172

1-800-GMC-8782 (462-8782)
1-800-GMC-8583 (462-8583) (For Text Telephone devices (TTYs))
Roadside Assistance: 1-800-GMC-8782 (462-8782)
Fax Number: 313-381-0022

From Puerto Rico
1-800-496-9992 (English)
1-800-496-9993 (Spanish)
Fax Number: 313-381-0022

U.S. Virgin Islands:
1-800-496-9994
Fax Number: 313-381-0022

Canada

General Motors of Canada Limited
Customer Communication Centre, 163-005
1908 Colonel Sam Drive
Oshawa, Ontario L1H 8P7

1-800-263-3777 (English)
1-800-263-7854 (French)
1-800-263-3830 (For Text Telephone devices (TTYs))
Roadside Assistance: 1-800-268-6800

All Overseas Locations

Please contact the local General Motors Business Unit.

Mexico, Central America and Caribbean Islands/Countries (Except Puerto Rico and U.S. Virgin Islands)

General Motors de Mexico, S. de R.L. de C.V.
Customer Assistance Center
Paseo de la Reforma # 2740
Col. Lomas de Bezares
C.P. 11910, Mexico, D.F.
01-800-508-0000
Long Distance: 011-52-53 29 0 800

GM Mobility Program for Persons with Disabilities

This program, available to qualified applicants, can reimburse you up to $1,000 toward eligible aftermarket driver or passenger adaptive equipment you may require for your vehicle (hand controls, wheelchair/scooter lifts, etc.).

This program can also provide you with free resource information, such as area driver assessment centers and mobility equipment installers. The offer is available for a limited period of time from the date of vehicle purchase/lease. For more details, or to determine your vehicle's eligibility, see your GM dealer or call the GM Mobility Assistance Center at 1-800-323-9935. Text telephone (TTY) users, call 1-800-833-9935.

GM of Canada also has a Mobility Program. Call 1-800-GM-DRIVE (463-7483) for details. All TTY users call 1-800-263-3830.

Roadside Assistance Program

Security While You Travel

1-800-GMC-8782 (1-800-462-8782, Roadside Assistance prompt)

As the proud owner of a new GMC vehicle, you are automatically enrolled in the GMC Roadside Assistance program. This value-added service is intended to provide you with peace of mind as you drive in the city or travel the open road. GMC's Roadside Assistance toll-free number is staffed by courteous and capable Roadside Assistance Representatives who are available 24 hours a day, 365 days a year.

We will provide the following services during the Bumper-to-Bumper warranty period, at no expense to you:

- **Fuel Delivery:** Delivery of enough fuel ($5 maximum) for the customer to get to the nearest service station.
- **Lock-out Service (identification required):** Replacement keys or locksmith service will be covered at no charge if you are unable to gain entry into your vehicle. Delivery of the replacement key will be covered within 10 miles.
- **Emergency Tow:** Tow to the nearest dealership for warranty service or in the event of a vehicle-disabling accident. Assistance when the vehicle is mired in sand, mud or snow.
- **Flat Tire Change:** Installation of a spare tire will be covered at no charge. (The customer is responsible for the repair or replacement of the tire if not covered by a warrantable failure.)
- **Jump Start:** No-start occurrences which require a battery jump start will be covered at no charge.
- **Dealer Locator Service**
- **Trip Routing:** Your Roadside Assistance Representative can provide you with specific information regarding this feature.
- **Trip Interruption Expense Benefits:** Your Roadside Assistance Representative can provide you with specific information regarding this feature.

In many instances, mechanical failures are covered under GMC's Bumper-to-Bumper warranty. However, when other services are utilized, our Roadside Assistance Representatives will explain any payment obligations you might incur.

For prompt and efficient assistance when calling, please provide the following to the Roadside Assistance Representative:

- Your name, home address, and home telephone number
- Telephone number of your location
- Location of the vehicle
- Model, year, color, and license plate number
- Mileage, Vehicle Identification Number, and delivery date of the vehicle
- Description of the problem

While we hope you never have the occasion to use our service, it is added security while traveling for you and your family. Remember, we are only a phone call away. GMC Roadside Assistance: 1-800-462-8782, text telephone (TTY) users, call 1-888-889-2438.

GMC reserves the right to limit services or reimbursement to an owner or driver when, in GMC's judgement, the claims become excessive in frequency or type of occurrence.

Roadside Assistance is not part of or included in the coverage provided by the New Vehicle Limited Warranty. GMC reserves the right to make any changes or discontinue the Roadside Assistance program at any time without notification.

Canadian Roadside Assistance

Vehicles purchased in Canada have an extensive roadside assistance program accessible from anywhere in Canada or the United States. Please refer to the Warranty and Owner Assistance Information book.

Courtesy Transportation

GMC has always exemplified quality and value in its offering of motor vehicles. To enhance your ownership experience, we and our participating dealers are proud to offer Courtesy Transportation, a customer support program for new vehicles.

The Courtesy Transportation program is offered to retail purchase/lease customers in conjunction with the Bumper-to-Bumper coverage provided by the New Vehicle Limited Warranty. Several transportation options are available when warranty repairs are required. This will reduce your inconvenience during warranty repairs.

Plan Ahead When Possible

When your vehicle requires warranty service, you should contact your dealer and request an appointment. By scheduling a service appointment and advising your service consultant of your transportation needs, your dealer can help minimize your inconvenience.

If your vehicle cannot be scheduled into the service department immediately, keep driving it until it can be scheduled for service, unless, of course, the problem is safety-related. If it is, please call your dealership, let them know this, and ask for instructions.

If the dealer requests that you simply drop the vehicle off for service, you are urged to do so as early in the work day as possible to allow for the same day repair.

Transportation Options

Warranty service can generally be completed while you wait. However, if you are unable to wait, GMC helps minimize your inconvenience by providing several transportation options. Depending on the circumstances, your dealer can offer you one of the following:

Shuttle Service

Participating dealers can provide you with shuttle service to get you to your destination with minimal interruption of your daily schedule. This includes a one way or round trip shuttle ride to a destination up to 10 miles from the dealership.

Public Transportation or Fuel Reimbursement

If your vehicle requires overnight warranty repairs, reimbursement (five days maximum) may be available for the use of public transportation such as taxi or bus. In addition, should you arrange transportation through a friend or relative, reimbursement for reasonable fuel expenses (five day maximum) may be available. Claim amounts should reflect actual costs and be supported by original receipts.

Courtesy Rental Vehicle

Your dealer may arrange to provide you with a courtesy rental vehicle or reimburse you for a rental vehicle you obrtained if your vehicle is kept for a warranty repair. Reimbursement will be limited to a maximum of $30.00 a day and must be supported by receipts. This requires that you sign and complete a rental agreement and meet state, local and rental vehicle provider requirements. Requirements vary and may include minimum age requirements, insurance coverage, credit card, etc. You are responsible for fuel usage charges and may also be responsible for taxes, levies, usage fees, excessive mileage or rental usage beyond the completion of the repair.

Generally it is not possible to provide a like-vehicle as a courtesy rental.

Additional Program Information

Courtesy Transportation is available during the Bumper-to-Bumper warranty coverage period, but it *is not* part of the New Vehicle Limited Warranty. A separate booklet entitled *Warranty and Owner Assistance Information* furnished with each new vehicle provides detailed warranty coverage information.

Courtesy Transportation is available only at participating dealers and all program options, such as shuttle service, may not be available at every dealer. Please contact your dealer for specific information about availability. All Courtesy Transportation arrangements will be administered by appropriate dealer personnel.

Canadian Vehicles: For warranty repairs during the Complete Vehicle Coverage period of the General Motors of Canada New Vehicle Limited Warranty, alternative transportation may be available under the Courtesy Transportation Program. Please consult your dealer for details.

General Motors reserves the right to unilaterally modify, change or discontinue Courtesy Transportation at any time and to resolve all questions of claim eligibility pursuant to the terms and conditions described herein at its sole discretion.

Vehicle Data Collection and Event Data Recorders

Your vehicle, like other modern motor vehicles, has a number of sophisticated computer systems that monitor and control several aspects of the vehicle's performance. Your vehicle uses on-board vehicle computers to monitor emission control components to optimize fuel economy, to monitor conditions for air bag deployment and, if so equipped, to provide anti-lock braking and to help the driver control the vehicle in difficult driving situations. Some information may be stored during regular operations to facilitate repair of detected malfunctions; other information is stored only in a crash or near crash event by computer systems commonly called event data recorders (EDR).

In a crash or near crash event, computer systems, such as the Air Bag Sensing and Diagnostic Module (SDM) in your vehicle may record information about the condition of the vehicle and how it was operated, such as engine speed, brake applications, throttle position, vehicle speed, safety belt usage, air bag readiness, air bag performance data, and the severity of a collision. This information has been used to improve vehicle crash performance and may be used to improve crash performance of future vehicles and driving safety. Unlike the data recorders on many airplanes, these on-board systems do not record sounds, such as conversation of vehicle occupants.

To read this information, special equipment is needed and access to the vehicle or the SDM is required. GM will not access information about a crash event or share it with others other than

- with the consent of the vehicle owner or, if the vehicle is leased, with the consent of the lessee,
- in response to an official request of police or similar government office,
- as part of GM's defense of litigation through the discovery process, or
- as required by law.

In addition, once GM collects or receives data, GM may

- use the data for GM research needs,
- make it available for research where appropriate confidentiality is to be maintained and need is shown, or
- share summary data which is not tied to a specific vehicle with non-GM organizations for research purposes.

Others, such as law enforcement, may have access to the special equipment that can read the information if they have access to the vehicle or SDM.

If your vehicle is equipped with OnStar®, please check the OnStar® subscription service agreement or manual for information on its operations and data collection.

Reporting Safety Defects

Reporting Safety Defects to the United States Government

If you believe that your vehicle has a defect which could cause a crash or could cause injury or death, you should immediately inform the National Highway Traffic Safety Administration (NHTSA), in addition to notifying General Motors.

If NHTSA receives similar complaints, it may open an investigation, and if it finds that a safety defect exists in a group of vehicles, it may order a recall and remedy campaign. However, NHTSA cannot become involved in individual problems between you, your dealer or General Motors.

To contact NHTSA, you may either call the Auto Safety Hotline toll-free at 1-800-424-9393 (or 366-0123 in the Washington, D.C. area) or write to:

NHTSA, U.S. Department of Transportation
Washington, D.C. 20590

You can also obtain other information about motor vehicle safety from the hotline.

Reporting Safety Defects to the Canadian Government

If you live in Canada, and you believe that your vehicle has a safety defect, you should immediately notify Transport Canada, in addition to notifying General Motors of Canada Limited. You may write to:

Transport Canada
330 Sparks Street
Tower C
Ottawa, Ontario K1A 0N5

Reporting Safety Defects to General Motors

In addition to notifying NHTSA (or Transport Canada) in a situation like this, we certainly hope you'll notify us. Please call us at 1-800-GMC-8782 (1-800-462-8782), or write:

Pontiac-GMC Customer Assistance Center
P.O. Box 33172
Detroit, MI 48232-5172

In Canada, please call us at 1-800-263-3777 (English) or 1-800-263-7854 (French). Or, write:

General Motors of Canada Limited
Customer Communication Centre, 163-005
1908 Colonel Sam Drive
Oshawa, Ontario L1H 8P7

Service Publications Ordering Information

Service Manuals

Service Manuals have the diagnosis and repair information on engines, transmission, axle, suspension, brakes, electrical, steering, body, etc.

RETAIL SELL PRICE: $120.00

Transmission, Transaxle, Transfer Case Unit Repair Manual

This manual provides information on unit repair service procedures, adjustments, and specifications for GM transmissions, transaxles, and transfer cases.

RETAIL SELL PRICE: $50.00

Service Bulletins

Service Bulletins give technical service information needed to knowledgeably service General Motors cars and trucks. Each bulletin contains instructions to assist in the diagnosis and service of your vehicle.

In Canada, information pertaining to Product Service Bulletins can be obtained by contacting your General Motors dealer or by calling 1-800-GM-DRIVE (1-800-463-7483).

Owner's Information

Owner publications are written specifically for owners and intended to provide basic operational information about the vehicle. The owner's manual will include the Maintenance Schedule for all models.

In-Portfolio: Includes a Portfolio, Owner's Manual, and Warranty Booklet.

RETAIL SELL PRICE: $35.00

Without Portfolio: Owner's Manual only.

RETAIL SELL PRICE: $25.00

Current and Past Model Order Forms

Service Publications are available for current and past model GM vehicles. To request an order form, please specify year and model name of the vehicle.

ORDER TOLL FREE: 1-800-551-4123
Monday-Friday 8:00 AM - 6:00 PM
Eastern Time

For Credit Card Orders Only
(VISA-MasterCard-Discover), visit Helm, Inc. on the World Wide Web at: www.helminc.com

Or you can write to:

Helm, Incorporated
P. O. Box 07130
Detroit, MI 48207

Prices are subject to change without notice and without incurring obligation. Allow ample time for delivery.

Note to Canadian Customers: All listed prices are quoted in U.S. funds. Canadian residents are to make checks payable in U.S. funds.

A

ABS (Anti-Lock Brake System) 3-39
AC (Air Conditioning) OFF 3-39
Accessory Power Outlets 3-16
Adding Washer Fluid 5-37
Additional Program Information 7-9
Additives, Fuel 5-6
Add-On Electrical Equipment 5-103
Add-On Equipment 4-58
Adjusting the Speakers
(Balance/Fade) 3-46, 3-49, 3-58
After Off-Road Driving 4-29
Air Bag
Off Light 3-26
Readiness Light 3-25
Air Bag Systems 1-60
Adding Equipment to Your
Air Bag-Equipped Vehicle 1-73
Air Bag Off Switch 1-70
How Does an Air Bag Restrain? 1-67
Servicing Your Air Bag-Equipped Vehicle 1-72
What Makes an Air Bag Inflate? 1-67
What Will You See After an
Air Bag Inflates? 1-68
When Should an Air Bag Inflate? 1-66
Where Are the Air Bags? 1-63
Air Cleaner/Filter, Engine 5-18
Airbag Sensing and Diagnostic Module (SDM) 7-9
All Overseas Locations 7-5
AM 3-68
AM-FM Radio 3-44
Antenna, Fixed Mast 3-68
Anti-lock Brake System 4-7
Anti-Lock Brake, System Warning Light 3-29
Appearance Care 5-94
Care of Safety Belts 5-97
Chemical Paint Spotting 5-101
Cleaning the Inside of Your Vehicle 5-95
Cleaning the Outside of Your Vehicle 5-98
Finish Damage 5-100
Sheet Metal Damage 5-100
Underbody Maintenance 5-101
Vehicle Care/Appearance Materials 5-102
Weatherstrips 5-97
Approaching a Hill 4-20
Ashtrays 3-17
Assist Handles 2-43
Audio System(s) 3-42
AM-FM Radio 3-44
Care of Your CD Player 3-68
Care of Your CDs 3-68
Chime Level Adjustment 3-68
Fixed Mast Antenna 3-68
Radio with CD 3-47
Radio with Six-Disc CD 3-56

Audio System(s) (cont.)
Setting the Time for Radios with Radio Data Systems (RDS) 3-43
Setting the Time for Radios without Radio Data Systems (RDS) 3-43
Theft-Deterrent Feature 3-67
Understanding Radio Reception 3-68
Automatic Door Locks 3-38
Automatic Headlamp System 3-13
Automatic Transmission 2-18
Fluid 5-19
Operation 2-21

B

Backing Up 4-70
BATTERY 3-39
Battery 5-41
Battery Replacement 2-6
Battery Run-Down Protection 3-16
Battery Warning Light 3-27
Bed Rails 2-43
Before Leaving on a Long Trip 4-36
Before You Go Off-Roading 4-16
Brake
Parking 2-29
System Warning Light 3-28
Brake Adjustment 5-40
Brake Fluid 5-38
Brake Pedal Travel 5-40
Brake Wear 5-40
BRAKES 3-40
Brakes 5-38
Braking 4-6
Braking in Emergencies 4-9
Break-In, New Vehicle 2-16
Bulb Replacement 5-50
Center High-Mounted Stoplamp (CHMSL) 5-53
Front Turn Signal, Sidemarker and Daytime Running Lamps 5-52
Halogen Bulbs 5-50
Headlamps 5-50
Replacement Bulbs 5-54
Taillamps, Turn Signal, Stoplamps and Back-up Lamps 5-53
Buying New Tires 5-68

C

California Fuel 5-6
Canada 7-4
Canadian Owners ii
Canadian Roadside Assistance 7-7
Capacities and Specifications 5-108
Carbon Monoxide 4-40, 4-60, 2-10, 2-34

Care of
Safety Belts 5-97
Your CD Player 3-68
Your CDs 3-68
Cargo Lamps 3-15
CD Messages 3-55, 3-67
Center Front Passenger Position,
Safety Belts 1-24
Center High-Mounted Stoplamp (CHMSL) 5-53
Certification/Tire Label 4-56
Chains, Tires 5-72
CHANGE OIL 3-40
Check
Engine Light 3-30
Check Engine Light 3-30
Checking Brake Fluid 5-39
Checking Coolant 5-27
Checking Engine Oil 5-13
Checking the Fluid Level 5-21
Checking Things Under the Hood 5-10
Checking Your Restraint Systems 1-73
Chemical Paint Spotting 5-101
Child Restraints
Child Restraint Systems 1-37
Infants and Young Children 1-34
Lower Anchorages and Top Tethers for
Children (LATCH System) 1-46
Older Children 1-31
Child Restraints (cont.)
Securing a Child Restraint Designed for
the LATCH System 1-48, 1-51
Securing a Child Restraint in a Rear
Seat Position 1-51
Securing a Child Restraint in the Center
Front Seat Position 1-53
Securing a Child Restraint in the Right
Front Seat Position 1-54, 1-58
Top Strap 1-42
Top Strap Anchor Location 1-44
Where to Put the Restraint 1-40
Chime Level Adjustment 3-68
Cigarette Lighter 3-17
Cleaning
Inside of Your Vehicle 5-95
Outside of Your Vehicle 5-98
Underbody Maintenance 5-101
Weatherstrips 5-97
Cleaning Aluminum Wheels 5-100
Cleaning Exterior Lamps/Lenses 5-98
Cleaning Fabric/Carpet 5-95
Cleaning Glass Surfaces 5-97
Cleaning Interior Plastic Components 5-97
Cleaning Leather 5-96
Cleaning the Mirror 2-39
Cleaning the Top of the Instrument Panel 5-97
Cleaning the Windshield and Wiper Blades 5-99

Cleaning Tires 5-100
Cleaning Vinyl 5-96
Climate Control System 3-18
  Outlet Adjustment 3-21
Clutch, Hydraulic 5-24
Compass Calibration 2-37
Compass Operation 2-37
Compass Variance 2-38
Composite Headlamp System 5-50
Content Theft-Deferrent 2-14
Control of a Vehicle 4-6
Coolant
  Engine Temperature Gage 3-30
  Heater, Engine 2-20
Cooling System 5-30
Crew Cab Models and Extended Cab
  Models with Rear Seats 1-51, 1-58
Cruise Control 3-9
Cruise Control Light 3-35
Cupholder(s) 2-42
Current and Past Model Order Forms 7-12
Customer Assistance Information
  Courtesy Transportation 7-7
  Customer Assistance for Text Telephone
    (TTY) Users 7-4
  Customer Assistance Offices 7-4
  Customer Satisfaction Procedure 7-2
Customer Assistance Information (cont.)
  GM Mobility Program for Persons with
    Disabilities 7-5
  Reporting Safety Defects to General Motors 7-11
  Reporting Safety Defects to the
    Canadian Government 7-11
  Reporting Safety Defects to the
    United States Government 7-10
  Roadside Assistance Program 7-6
  Service Publications Ordering Information 7-11

D

Daytime Running Lamps 3-14
Daytime Running Lamps Indicator Light 3-36
Defensive Driving 4-2
Defogging and Defrosting 3-20
Dinghy Towing 4-48
Doing Your Own Service Work 5-4
Dolly Towing 4-49
Dome Lamp 3-16
Door
  Locks 2-7
  Power Door Locks 2-8
  Programmable Automatic Door Locks 2-8
  Rear Door Security Locks 2-9
  Rear Doors 2-10

DOORS 3-40
Driver
Position, Safety Belt 1-16
Driver Information Center (DIC) 3-37
DIC Controls and Displays 3-37
DIC Warnings and Messages 3-39
Driving
At Night 4-29
City 4-34
Defensive 4-2
Drunken 4-3
Freeway 4-35
Hill and Mountain Roads 4-38
In Rain and on Wet Roads 4-31
Winter 4-40
Driving Across an Incline 4-24
Driving Downhill 4-23
Driving in Mud, Sand, Snow or Ice 4-27
Driving in Water 4-28
Driving On Grades 4-71
Driving on Off-Road Hills 4-20
Driving on Snow or Ice 4-40
Driving Through Deep Standing Water 4-33
Driving Through Flowing Water 4-33
Driving Uphill 4-21
Driving with a Trailer 4-69

E

Electrical System
Add-On Equipment 5-103
Fuses and Circuit Breakers 5-104
Power Windows and Other Power Options 5-104
Windshield Wiper Fuses 5-104
Emissions Inspection and Maintenance
Programs 3-33
ENG (Engine) HOT 3-40
Engine
Air Cleaner/Filter 5-18
Battery 5-41
Check and Service Engine Soon Light 3-30
Coolant 5-25
Coolant Heater 2-20
Coolant Temperature Gage 3-30
Drive Belt Routing 6-16
Engine Compartment Overview 5-12
Exhaust 2-34
Fan Noise 5-35
Oil 5-13
Overheating 5-28
Starting 2-18
Engine Compartment Fuse Block 5-105
Engine Oil Additives 5-16
Environmental Concerns 4-17

Event Data Recorders (EDR) 7-9
Exit Lighting 3-16
Express Down Windows 2-13
Extender, Safety Belt 1-30
Exterior Lamps 3-12

F

Fan Knob 3-18
Filter
  Engine Air Cleaner 5-18
Finding a Program Type (PTY) Station 3-50, 3-59
Finding a Station 3-44, 3-48, 3-57
Finish Care 5-98
Finish Damage 5-100
Five-Speed 2-24
Fixed Mast Antenna 3-68
Flash-to-Pass 3-7
Flat Tire 5-73
Flat Tire, Changing 5-74
FLUID 3-40
Fluid
  Automatic Transmission 5-19
  Manual Transmission 5-22
  Power Steering 5-36
  Windshield Washer 5-37
FM 3-68
Fog Lamps 3-14
Following Distance 4-70
Four-Wheel Drive 2-26, 5-48
Front Armrest Storage Area 2-43
Front Axle 5-49
Fuel 5-5
  Additives 5-6
  California Fuel 5-6
  Filling a Portable Fuel Container 5-10
  Filling Your Tank 5-7
  Fuels in Foreign Countries 5-7
  Gage 3-36
  Gasoline Octane 5-5
  Gasoline Specifications 5-5
FUEL CAP 3-40
Fuses
  Fuses and Circuit Breakers 5-104
  Windshield Wiper 5-104

G

Gage
  Engine Coolant Temperature 3-30
  Fuel 3-36
  Speedometer 3-24
  Tachometer 3-24
Gasoline
  Octane 5-5
  Specifications 5-5

Getting Familiar with Off-Road Driving 4-18
Glove Box 2-42
GM Mobility Program for Persons with
Disabilities 7-5
GM Oil Life System™ 3-38

H

Hazard Warning Flashers 3-4
Head Restraints 1-7
Headlamp High/Low-Beam Changer 3-7
Headlamps 5-50
Bulb Replacement 5-50
Front Turn Signal, Sidemarker and
Daytime Running Lamps 5-52
Halogen Bulbs 5-50
Heated Seats 1-5
Highbeam On Light 3-35
Highway Hypnosis 4-37
Hill and Mountain Roads 4-38
Hitches 4-68
Hood
Checking Things Under 5-10
Release 5-11
Horn 3-4
How to Add Coolant to the Coolant
Recovery Tank 5-32
How to Add Coolant to the Radiator 5-34
How to Add Fluid 5-22, 5-23
How to Check 5-20, 5-22, 5-65
How to Check and Add Fluid 5-24
How to Check Lubricant 5-47, 5-49
How to Check Power Steering Fluid 5-36
How to Inspect the Engine Air Cleaner/Filter 5-18
How to Use This Manual ii
How to Wear Safety Belts Properly 1-16
Hydraulic Clutch 5-24
Hydroplaning 4-33

I

If No Steam Is Coming From Your Engine 5-29
If Steam Is Coming From Your Engine 5-28
If the Light is Flashing 3-32
If the Light Is On Steady 3-32
If You Are Caught in a Blizzard 4-42
If You Are Stuck in Sand, Mud, Ice or Snow 4-44
If You Do Decide To Pull A Trailer 4-61
Ignition Positions 2-17
Infants and Young Children, Restraints 1-34
Inflation - Tire Pressure 5-64
Instrument Panel
Cluster 3-23
Overview 3-2
Instrument Panel Brightness 3-15
Interior Lamps 3-15

J

Jump Starting 5-42

K

Keyless Entry System 2-4
Keys 2-2

L

Lamps
  Exterior 3-12
  Interior 3-15
Lamps On Reminder 3-13
Language 3-39
Lap Belt 1-24
Lap-Shoulder Belt 1-16
LATCH System
  Child Restraints 1-46
  Securing a Child Restraint Designed for
    the LATCH System 1-48, 1-51
Latches, Seatback 1-8
Leaving Your Vehicle 2-10
Leaving Your Vehicle With the
  Engine Running 2-31
Light
  Air Bag Off 3-26
  Air Bag Readiness 3-25
Light (cont.)
  Anti-Lock Brake System Warning 3-29
  Battery Warning 3-27
  Brake System Warning 3-28
  Cruise Control 3-35
  Daytime Running Lamps Indicator 3-36
  Highbeam On 3-35
  Malfunction Indicator 3-30
  Oil Pressure 3-34
  Safety Belt Reminder 3-24
  Security 3-35
  Up-Shift 3-28
Loading Your Vehicle 4-52
Loading Your Vehicle for Off-Road Driving 4-16
Lockout Protection 2-9
Locks
  Door 2-7
  Leaving Your Vehicle 2-10
  Lockout Protection 2-9
  Power Door 2-8
  Programmable Automatic Door Locks 2-8
  Rear Door Security Locks 2-9
Loss of Control 4-14
LOW FUEL 3-41
LOW TRAC (Traction) 3-41
Lumbar
  Manual Controls 1-5

M

Maintenance Schedule
Additional Required Services 6-6
At Each Fuel Fill 6-9
At Least Once a Month 6-9
At Least Once a Year 6-10
Introduction 6-2
Maintenance Footnotes 6-7
Maintenance Record 6-17
Maintenance Requirements 6-2
Normal Maintenance Replacement Parts 6-15
Owner Checks and Services 6-9
Recommended Fluids and Lubricants 6-13
Scheduled Maintenance 6-4
Using Your 6-3
Your Vehicle and the Environment 6-2
Maintenance When Trailer Towing 4-72
Making Turns 4-70
Malfunction Indicator Light 3-30
Manual Lumbar Controls 1-5
Manual Seats 1-3
Manual Transmission 2-18
Fluid 5-22
Operation 2-24
Manual Windows 2-12
Map Lamps 2-37
Matching Transmitter(s) to Your Vehicle 2-6
Message
DIC Warnings and Messages 3-39
Mexico, Central America and Caribbean
Islands/Countries (Except Puerto Rico and
U.S. Virgin Islands) 7-5
Mirror Operation 2-37
Mirrors
Automatic Dimming Rearview with Compass
and Temperature Display 2-37
Manual Rearview Mirror 2-36
Manual Rearview Mirror with OnStar® 2-36
Outside Convex Mirror 2-40
Outside Manual Mirrors 2-39
Outside Power Mirrors 2-40
Mode Buttons 3-19
Mode Knob 3-19
MyGMLink.com 7-3

N

New Vehicle Break-In 2-16
Normal Maintenance Replacement Parts 6-15

O

Odometer 3-24
Odometer, Trip 3-24
Off-Road Recovery 4-12
OIL 3-41
Oil
  Engine 5-13
  Pressure Light 3-34
OIL LIFE 3-41
Older Children, Restraints 1-31
Online Owner Center 7-3
OnStar® Personal Calling 2-42
OnStar® Services 2-41
OnStar® System 2-41
OnStar® Virtual Advisor 2-42
Operating Your All-Wheel-Drive Vehicle
  Off Paved Roads 4-15
Other Warning Devices 3-4
Outlet Adjustment 3-21
Outside
  Convex Mirror 2-40
  Manual Mirrors 2-39
  Power Mirrors 2-40
Owner Checks and Services 6-9
Owners, Canadian ii
Owner's Information 7-12

P

PARK BRK (Brake) 3-41
Park (P)
  Shifting Into 2-30
  Shifting Out of 2-32
Parking
  Brake 2-29
  Over Things That Burn 2-33
Parking on Hills 4-71
Parking Your Vehicle 2-33
Passing 4-13, 4-70
Passlock® 2-16
Payload 4-57
Pickup Conversion to Chassis Cab 4-59
Plan Ahead When Possible 7-7
Playing a CD 3-53, 3-62
Playing a Specific Loaded CD 3-63
Playing the Radio 3-44, 3-47, 3-56
Power
  Accessory Outlets 3-16
  Door Locks 2-8
  Electrical System 5-104
  Seat 1-4
  Steering Fluid 5-36
  Windows 2-13

Power and Heated Seat Circuit Breakers 5-104
Power Steering 4-10
Pretensioners, Safety Belt 1-30
Programmable Automatic Door Locks 2-8

Q

Questions and Answers About Safety Belts 1-15

R

Radiator Pressure Cap 5-28
Radio Data System (RDS) 3-50, 3-59
Radio Messages 3-46, 3-53
Radios 3-42
AM-FM Radio 3-44
Care of Your CD Player 3-68
Care of Your CDs 3-68
Radio with CD 3-47
Radio with Six-Disc CD 3-56
Setting the Time for Radios with Radio Data Systems (RDS) 3-43
Setting the Time for Radios without Radio Data Systems (RDS) 3-43
Theft-Deterrent 3-67
Understanding Reception 3-68
RDS Messages 3-52, 3-61
Rear Axle 5-47
Rear Door Security Locks 2-9
Rear Doors 2-10
Rear Safety Belt Comfort Guides 1-28
Rear Seat Operation 1-9, 1-10
Rear Seat Passengers, Safety Belts 1-26
Rear Storage Area 2-43
Rearview Mirror, Automatic Dimming with Compass and Temperature Display 2-37
Rearview Mirror with OnStar® 2-36
Rearview Mirrors 2-36
Reclining Seatbacks 1-6
Recommended Fluids and Lubricants 6-13
Recreational Vehicle Towing 4-47
REDUCED POWER 3-41
Regular Cab Models and Extended Cab Models without Rear Seats 3-26, 1-48, 1-54, 1-70
Remote Keyless Entry System 2-4
Remote Keyless Entry System, Operation 2-5
Removing the Flat Tire and Installing the Spare Tire 5-78
Removing the Spare Tire and Tools 5-75
Replacement Bulbs 5-54
Replacing Brake System Parts 5-41
Replacing Restraint System Parts After a Crash 1-74

Reporting Safety Defects
Canadian Government 7-11
General Motors 7-11
United States Government 7-10
Restraint System Check
Checking Your Restraint Systems 1-73
Replacing Restraint System Parts
After a Crash 1-74
Restraint Systems
Checking 1-73
Replacing Parts 1-74
Retained Accessory Power (RAP) 2-18
Right Front Passenger Position, Safety Belts 1-24
Roadside
Assistance Program 7-6
Rocking Your Vehicle To Get It Out 4-45
Routing, Engine Drive Belt 6-16
Running Your Engine While You Are Parked 2-34

S

Safety Belt
Pretensioners 1-30
Reminder Light 3-24
Safety Belts
Care of 5-97
Center Front Passenger Position 1-24
Safety Belts (cont.)
Driver Position 1-16
How to Wear Safety Belts Properly 1-16
Questions and Answers About Safety Belts 1-15
Rear Safety Belt Comfort Guides for
Children and Small Adults 1-28
Rear Seat Passengers 1-26
Right Front Passenger Position 1-24
Safety Belt Extender 1-30
Safety Belt Use During Pregnancy 1-23
Safety Belts Are for Everyone 1-11
Safety Chains 4-68
Safety Warnings and Symbols iii
Scanning the Terrain 4-19
Scheduled Maintenance 6-4
Sealed Beam Headlamps 5-51
Seatback Latches 1-8
Seats
Head Restraints 1-7
Heated Seats 1-5
Manual 1-3
Manual Lumbar 1-5
Power Seats 1-4
Rear Seat Operation 1-9, 1-10
Reclining Seatbacks 1-6
Seatback Latches 1-8
Secondary Latch System 5-90

Securing a Child Restraint
Center Front Seat Position 1-53
Designed for the LATCH System 1-48, 1-51
Rear Seat Position 1-51
Right Front Seat Position 1-54, 1-58
Security Light 3-35
Security While You Travel 7-6
SERV (Service) 4WD (Four-Wheel Drive) 3-41
SERV VEH (Service Vehicle) 3-42
Service 5-3
Adding Equipment to the Outside of Your Vehicle 5-4
Doing Your Own Work 5-4
Engine Soon Light 3-30
Publications Ordering Information 7-11
Service Bulletins 7-11
Service Manuals 7-11
Setting Preset PTYs 3-51, 3-60
Setting Preset Stations 3-45, 3-48, 3-57
Setting the Time
Radios with Radio Data Systems (RDS) 3-43
Radios without Radio Data Systems (RDS) 3-43
Setting the Tone (Bass/Treble) 3-45, 3-49, 3-58
Sheet Metal Damage 5-100
Shift Speeds 2-25
Shifting Into Park (P) 2-30
Shifting Out of Park (P) 2-32
Shoulder Belt Height Adjuster 1-18
Skidding 4-14
Sliding Rear Windows 2-14
Some Other Rainy Weather Tips 4-33
Spare Tire 5-93
Special Fabric Cleaning Problems 5-96
Specifications, Capacities 5-108
Speedometer 3-24
Stalling on an Incline 4-26
Starting Your Engine 2-18, 2-19
Steering 4-10
Steering in Emergencies 4-11
Steering Tips 4-10
Steering Wheel, Tilt Wheel 3-5
Storage Areas
Cupholder(s) 2-42
Front Armrest Storage Area 2-43
Glove Box 2-42
Rear Storage Area 2-43
Storing a Flat or Spare Tire, Jack and Tools 5-86
Stuck in Sand, Mud, Ice or Snow 4-44
Sun Visors 2-14

T

Tachometer 3-24
Tailgate 2-10
Taillamps
  Turn Signal, Stoplamps and
    Back-up Lamps 5-53
Temperature Display Operation 2-39
Temperature Knob 3-18
Testing the Alarm 2-15
Theft-Deterrent, Radio 3-67
Theft-Deterrent Systems 2-14
  Content Theft-Deterrent 2-14
  Passlock® 2-16
Tilt Wheel 3-5
Tire Sidewall Labeling 5-58
Tire Size 5-61
Tire Terminology and Definitions 5-62
Tires 5-57
  Buying New Tires 5-68
  Chains 5-72
  Changing a Flat Tire 5-74
  If a Tire Goes Flat 5-73
  Inflation - Tire Pressure 5-64
  Inspection and Rotation 5-65
  Spare Tire 5-93
  Uniform Tire Quality Grading 5-69
  Wheel Alignment and Tire Balance 5-70
Tires (cont.)
  Wheel Replacement 5-70
  When It Is Time for New Tires 5-67
To Use the Engine Coolant Heater 2-20
Top Strap 1-42
Top Strap Anchor Location 1-44
Torque Lock 2-32
Total Weight on Your Vehicle's Tires 4-68
Towing
  Recreational Vehicle 4-47
  Towing a Trailer 4-60
  Your Vehicle 4-47
Traction
  Control System (TCS) 4-9
TRACTION FAULT 3-42
Trailer
  Recommendations 4-59
Trailer Brakes 4-69
Transfer Case 5-48
Transmission
  Fluid, Automatic 5-19
  Fluid, Manual 5-22
  Up-Shift Light 3-28
Transmission Operation, Automatic 2-21
Transmission Operation, Manual 2-24
Transmission, Transaxle, Transfer Case Unit
  Repair Manual 7-11
Transportation Options 7-8

Traveling to Remote Areas 4-17
Trip Information 3-37
Trip Odometer 3-24
Truck-Camper Loading Information 4-59
Turn and Lane Change Signals 3-6
TURN SIGNAL 3-42
Turn Signal/Multifunction Lever 3-5
Turn Signals When Towing a Trailer 4-70
Two-Tiered Loading 4-58

U

Understanding Radio Reception 3-68
Uniform Tire Quality Grading 5-69
United States 7-4
Up-Shift Light 2-25, 3-28
Used Replacement Wheels 5-71
Using Cleaner on Fabric 5-95
Using Song List Mode 3-65
Using the Recovery Hooks 4-45

V

Vehicle
  Control 4-6
  Damage Warnings iv
  Loading 4-52
Vehicle (cont.)
  Parking Your 2-33
  Symbols iv
Vehicle Data Collection and Event Data
  Recorders 7-9
Vehicle Identification
  Number (VIN) 5-103
  Service Parts Identification Label 5-103
Vehicle Storage 5-42
Ventilation Adjustment 3-21
Visors 2-14

W

Warning Lights, Gages and Indicators 3-22
Warnings
  DIC Warnings and Messages 3-39
  Hazard Warning Flashers 3-4
  Other Warning Devices 3-4
  Safety and Symbols iii
  Vehicle Damage iv
Washing Your Vehicle 5-98
Weight of the Trailer 4-61
Weight of the Trailer Tongue 4-67
Weight-Distributing Hitches and Weight
  Carrying Hitches 4-68
What Kind of Engine Oil to Use 5-14

What to Add 5-39
What to Do with Used Oil 5-17
What to Use 5-26, 5-36, 5-37, 5-47, 5-49
Wheels
  Alignment and Tire Balance 5-70
  Replacement 5-70
When to Add Engine Oil 5-14
When to Change Engine Oil
  (GM Oil Life System) 5-16
When to Check 5-22, 5-65
When to Check and Change 5-19
When to Check and Change Lubricant 5-47, 5-49
When to Check and What to Use 5-24
When to Check Power Steering Fluid 5-36
When to Inspect the Engine Air Cleaner/Filter 5-18
When You Are Ready to Leave After
  Parking on a Hill 4-72
Where to Put the Restraint 1-40
Why Safety Belts Work 1-12
Window Lockout 2-13
Windows 2-12
  Manual 2-12
  Power 2-13
  Sliding Rear 2-14
Windshield Washer 3-8
  Fluid 5-37
Windshield Wiper
  Blade Replacement 5-55
  Fuses 5-104
Windshield Wipers 3-8
Winter Driving 4-40

Y

Your Vehicle and the Environment 6-2