Owner's Manual
for Vehicle

Contents
From A to Z

CarManuals2.com

Online Edition for Part No. 01 41 0 156 416 - © 10/01 BMW AG

CarManuals2.com

X5 3.0i
X5 4.4i
X5 4.6is

Online Edition for Part No. 01 41 0 156 416 - © 10/01 BMW AG

Congratulations, and thank you for choosing a BMW.

CarManuals2.com

Thorough familiarity with your vehicle will provide you with enhanced control and security when you drive it. We therefore have this request:

Please take the time to read this Owner's Manual and familiarize yourself with the information that we have compiled for you before starting off in your new vehicle. It contains important data and instructions intended to assist you in gaining maximum use and satisfaction from the unique range of technical features on your BMW. The manual also contains information on vehicle maintenance designed to enhance operating safety and contribute to maintaining the value of your BMW throughout an extended service life.

For additional information refer to the supplemental manuals.

This Owner's Manual should be considered a permanent part of this vehicle. It should stay with the vehicle when sold to provide the next owner with important operating, safety and maintenance information.

This manual is supplemented by a Service and Warranty Information Booklet (US models) or a Warranty and Service Guide Booklet (Canadian models).
We recommend that you read this publication thoroughly.

Your BMW is covered by the following warranties:

– New Vehicle Limited Warranty

– Limited Rust Perforation Warranty

– Federal Emissions System Defect Warranty

– Federal Emissions Performance Warranty

– California Emission Control System Limited Warranty

Detailed information about these warranties is listed in the Service and Warranty Information Booklet (US models) or in the Warranty and Service Guide Booklet (Canadian models).

We wish you an enjoyable driving experience.

BMW AG

Contents

Overview

Cockpit 14
Instrument cluster 15
Indicator and warning lamps 18
Steering wheel with multifunction buttons 22
Warning triangle 23
First-aid kit 23
Refueling 24
Fuel specifications 25
Tire inflation pressures 26

Controls and features

Locks and security systems:
Keys 30
Central locking system 30
Opening and closing – via the door lock 31
Opening and closing – via the remote control 32
Opening and closing – from the inside 35
Liftgate 36
Tailgate 37
Alarm system 39
Electric power windows 40
Sliding/tilt sunroof with glass moonroof 42

Adjustments:
Correct sitting posture 44
Seats 44
Mechanical seat 45
Power seat 46
Head restraints 47
Power rear-seat backrest adjustment 48
Safety belt 49
Seat, mirror and steering wheel memory 50
Seat heating 51
Adjusting steering wheel 52
Steering wheel heating 53
Mirrors 53

Passenger safety systems:
Airbags 55
Transporting children safely 58
Vehicle Memory, Key Memory 61

Driving:
Ignition lock 62
Starting the engine 62
Switching off the engine 64
Parking brake 64
Manual transmission 65
Automatic transmission with Steptronic 66
Indicator/Headlamp flasher 68
Washer/Wiper system/Rain sensor 69
Cruise control 71

Everything under control:
Odometer, outside temperature display 74
Tachometer 75
Energy control 75
Fuel gauge 75
Coolant temperature gauge 76
Service Interval Display 76
Check Control 77
Computer 80
Multi-Information Display (MID) 82
Digital clock in the MID 83
Computer in the MID 86

CarManuals2.com

© 2001 Bayerische Motoren Werke Aktiengesellschaft
Munich, Germany
Reprinting, including excerpts, only with the written consent of BMW AG, Munich.
Order no. 01 41 0 156 416
US English IX/2001
Printed in Germany
Printed on environmentally friendly paper (bleached without chlorine, suitable for recycling).

Technology for safety and driving convenience:
Park Distance Control (PDC) 91
Dynamic Stability Control (DSC) 92
Hill Descent Control (HDC) 94
Variable Ride Height 95
Variable Ride Height on both axles 95
Tire Pressure Monitor (RDC) 98
Adaptive brake light 99

Lamps:
Parking lamps/Low beams 100
Instrument lighting 101
High beams/Standing lamps 101
Fog lamps 101
Interior lamps 102
Reading lamps 102

Controlling the climate for pleasant driving:
Air conditioner 103
Automatic climate control 106
Sunshades
Independent ventilation system 112

Cabin convenience:
BMW Universal Transmitter 113
Glove compartment 116
Storage compartments 116
Cellular phone 117
Beverage holder 117
Glasses compartment 118
Ashtray, front 118
Cigarette lighter, front 118
Ashtray, rear 119
Cigarette lighter, rear 119

Loading and transporting:
Ski bag 120
Cargo area
Fold the rear backrests down 122
Cargo area cover 122
Partition net 123
Cover panels in the cargo area 124
Power outlets 125
Pull-out cargo floor 126
Stowing cargo 127
Roof-mounted luggage rack 128

Special operating instructions:
Break-in procedures 132
Driving your BMW X5 133
General driving notes 134
Antilock Brake System (ABS) 134
Brake system 135

Wheels and tires:
Tire inflation pressures 136
Tire condition 136
Tire replacement 137
Wheel and tire combinations 139
Winter tires 140
Snow chains 140

CarManuals2.com

Contents

Operation, maintenance

Under the hood:
Hood 141
Engine compartment essentials 142
Washer fluid 143
Engine oil 143
Coolant 145
Brake fluid 146

Care and maintenance:
The BMW Maintenance System 147

Laws and regulations:
Technical modifications 148
California Proposition 65 Warning 148
OBD interface socket 149

Owner service procedures

Replacement procedures:
Onboard tool kit 152
Windshield wiper blades 152
Lamps and bulbs 153
Changing a wheel 156
Battery 162
Fuses 163

Assistance, giving and receiving:
Jump-starting 164
Towing the vehicle 166

Technical data

Engine specifications 170
Dimensions 171
Weights 172
Capacities 173

CarManuals2.com

Everything from A to Z 176

CarManuals2.com

Notes on the Owner's Manual

We have made every effort to ensure that you are able to find what you need in this Owner's Manual as quickly as possible. The fastest way to find certain topics is by using the detailed index at the end. If you desire an initial overview of your vehicle, this can be found in the first chapter. The detailed table of contents on the preceeding pages is intended to stimulate your curiosity regarding your BMW and to encourage you to read the Owner's Manual.

Should you wish to sell your BMW at some time in the future, please remember to hand over the Owner's Manual to the new owner; it is legal part of the vehicle.

If you have any questions, your BMW Sports Activity Vehicle center will be glad to advise you.

Symbols used

Indicates precautions that must be followed precisely in order to avoid the possibility of personal injury and serious damage to the vehicle.◀

Contains information that will assist you in gaining the optimum benefit from your vehicle and enable you to care more effectively for your vehicle.◀

Refers to measures that can be taken to help protect the environment.◀

◀ Marks the end of a specific item of information.

* Indicates special equipment, country-specific equipment and optional extras.

Identifies index entries that refer to owner service procedures or topics on vehicle maintenance.

Identifies systems or components, which can either be activated or adapted to suit an individual driver's requirements ("Vehicle Memory", "Key Memory"), refer to page 61.
Remember that activation and adjustments on some of these systems can only be performed at your BMW Sports Activity Vehicle center.◀

CarManuals2.com

The individual vehicle

On buying your BMW, you have decided in favor of a model with individualized equipment and features. This Owner's Manual describes all models and equipment that BMW offers within the same group.

We hope you will understand that equipment and features are included that you might not have chosen for your vehicle. Any differences can easily be identified, since all optional accessories and special equipment are marked with an asterisk *.

If your BMW features equipment which is not described in this Owner's Manual (car radio or telephone, for instance), Supplementary Owner's Manuals are enclosed. We ask you to read these manuals as well.

Status at time of printing

BMW pursues a policy of continuous, ongoing development that is conceived to ensure that our vehicles continue to embody the highest quality and safety standards combined with advanced, state-of-the-art technology. For this reason, it is possible that the features described in this Owner's Manual could differ from those on your vehicle. Nor can errors and omissions be entirely ruled out. You are therefore asked to appreciate that no legal claims can be entertained on the basis of the data, illustrations or descriptions in this manual.

CarManuals2.com

For your own safety

Use unleaded gasoline only. Fuels containing up to and including 10% ethanol or other oxygenates with up to 2.8% oxygen by weight (that is, 15% MTBE or 3% methanol plus an equivalent amount of co-solvent) will not void the applicable warranties respecting defects in materials or workmanship. Field experience has indicated significant differences in fuel quality (volatility, composition, additives, etc.) among gasolines offered for sale in the United States and Canada. The use of poor-quality fuels may result in driveability, starting and stalling problems especially under certain environmental conditions such as high ambient temperature and high altitude. Should you encounter driveability problems which you suspect could be related to the fuel you are using, we recommend that you respond by switching to a recognized high-quality brand.
Failure to comply with these recommendations may result in unscheduled maintenance.
Follow the relevant safety rules when you are handling gasoline.◀

Important safety information.

For your own safety, use genuine parts and accessories approved by BMW.

When you purchase accessories tested and approved by BMW and Original BMW Parts, you simultaneously acquire the assurance that they have been thoroughly tested by BMW to ensure optimum performance when installed on your vehicle.

BMW warrants these parts to be free from defects in material and workmanship.

BMW will not accept any liability for damage resulting from installation of parts and accessories not approved by BMW.

CarManuals2.com

BMW cannot test every product from other manufacturers to verify if it can be used on a BMW safely and without risk to either the vehicle, its operation, or its occupants.

Original BMW Parts, BMW Accessories and other products approved by BMW, together with professional advice on using these items, are available from all BMW Sports Activity Vehicle centers.

Installation and operation of non-BMW approved accessories such as alarms, radios, amplifiers, radar detectors, wheels, suspension components, brake dust shields, telephones (including operation of any portable cellular phone from within the vehicle without using an externally mounted antenna) or transceiver equipment (for instance, CBs, walkie-talkie, ham radio or similar accessories) may cause extensive damage to the vehicle, compromise its safety, interfere with the vehicle's electrical system or affect the validity of the BMW Limited Warranty. Contact your BMW Sports Activity Vehicle center for additional information.◀

Maintenance, replacement, or repair of the emission control devices and systems may be performed by any automotive repair establishment or individual using any certified automotive part.◀

Symbol on vehicle parts

Indicates that you should consult the relevant section of this Owner's Manual for information on a particular part or assembly.

The following only applies to vehicles owned and operated in the US.

REPORTING SAFETY DEFECTS

If you believe that your vehicle has a defect which could cause a crash or could cause injury or death, you should immediately inform the National Highway Traffic Safety Administration (NHTSA) in addition to notifying BMW of North America, LLC, P.O. Box 1227, Westwood, New Jersey 07675-1227, Telephone (201) 307-4000.

If NHTSA receives similar complaints, it may open an investigation, and if it finds that a safety defect exists in a group of vehicles, it may order a recall and remedy campaign. However, NHTSA cannot become involved in individual problems between you, your dealer or BMW of North America, LLC.

CarManuals2.com

To contact NHTSA, you may either call the Auto Safety Hotline toll-free at 1-800-424-9393 (or 366-0123 in Washington, D.C. area) or write to: NHTSA, U.S. Department of Transportation, Washington, D.C. 20590. You can also obtain other information about motor vehicle safety from the Hotline.

CarManuals2.com

Overview

Controls and features

Operation, maintenance

Owner service procedures

Technical data

Index

CarManuals2.com

Cockpit

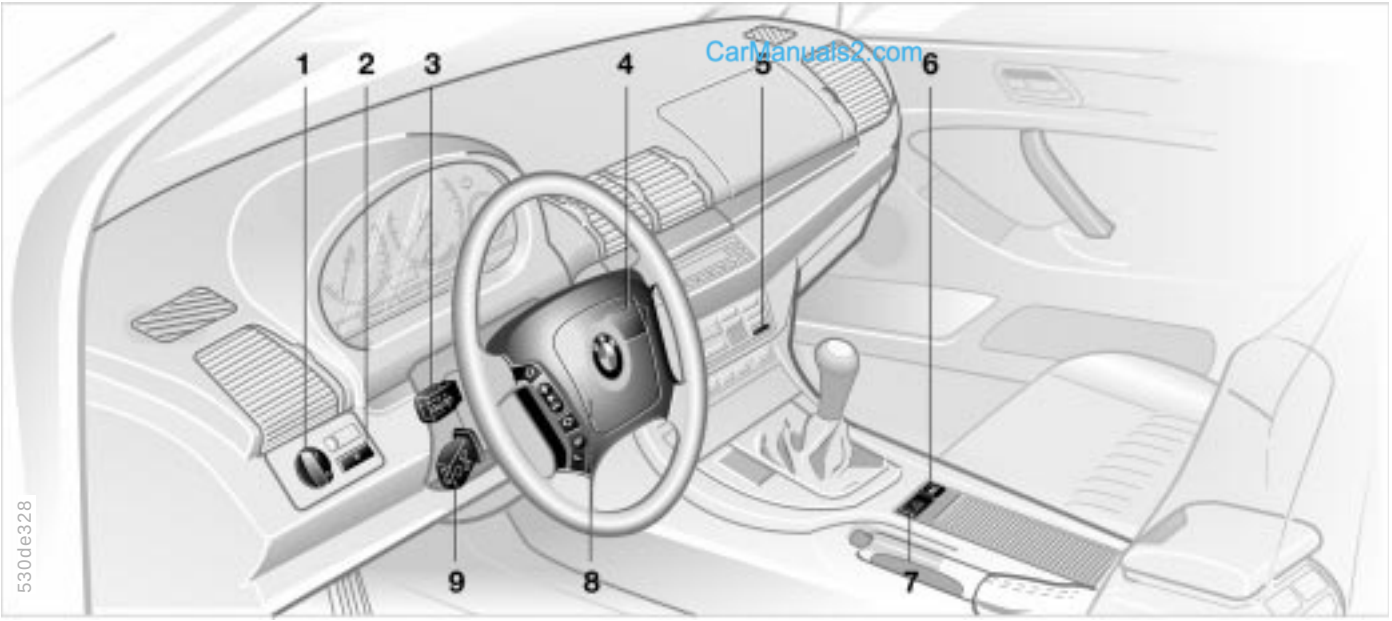

CarManuals2.com

1 Parking lamps/Low beams 100

2 Fog lamps 101

3 ▷ Turn signal indicator 69
▷ Standing lamps 101
▷ High beams 101
▷ Headlamp flasher 68
▷ Computer 80

4 Wiper/Washer system 69

5 Rear window defroster 104, 109

6 Central locking system 30

7 Hazard warning flashers

8 Horn, the entire surface

9 Adjusting steering wheel 52

1 Fuel gauge 75

2 Indicator lamp for turn signals 21

3 Speedometer

4 Indicator lamp for high beams 21

5 Tachometer and Energy Control 75

6 Coolant temperature gauge 76

7 Indicator and warning lamps 18 to 21

8 Selector lever and program display for automatic transmission* 66

9 Service Interval Display 76

10 Computer display – operation via the turn signal lever, refer to page 80:
- ▷ Outside temperature
- ▷ Average fuel consumption
- ▷ Cruising range
- ▷ Average speed

CarManuals2.com

Instrument cluster

11 Indicator lamp for Dynamic Stability Control (DSC) 20

12 Variable Ride Height* 95

13 Odometer and trip odometer 74

14 Indicator for Check Control 77

15 Reset button for trip odometer 74

16 Indicator and warning lamps 18 to 21

CarManuals2.com

Instrument cluster*

1 Fuel gauge 75
2 Indicator lamp for turn signals 21
3 Speedometer
4 Indicator lamp for high beams 21
5 Tachometer and Energy Control 75
6 Coolant temperature gauge 76
7 Indicator and warning lamps 18 to 21
8 CHECK button 77
9 Selector lever and program display for automatic transmission* 66
10 Outside temperature display 74
11 Indicator lamp for Dynamic Stability Control (DSC) 20
12 Trip odometer 74
13 Indicator for Check Control 77
14 Odometer 74
15 Service Interval Display 76
16 Reset button for trip odometer 74
17 Indicator and warning lamps 18 to 21

Indicator and warning lamps

Technology that monitors itself

Indicator and warning lamps that are identified by "●" are tested for proper functioning whenever the ignition key is turned. They each light up once for different periods of time.

If a fault should occur in one of these systems, the corresponding lamp does not go out after the engine is started or it lights up while the vehicle is moving. You will see how to react to this in the following section.

Red: stop immediately

Battery charge current ●
The battery is no longer being charged. There is a malfunction of the alternator drive belt or in the charging circuit of the alternator. Please contact the nearest BMW Sports Activity Vehicle center.

If the drive belt is defective, do not continue driving. The engine could be damaged due to overheating. If the drive belt is defective, increased steering effort is also required.◀

Engine oil pressure ●
Stop the vehicle immediately and switch off the engine. Check the engine oil level; top off as required. If the oil level is correct: please contact the nearest BMW Sports Activity Vehicle center.

CarManuals2.com

Do not continue driving. The engine could be damaged because of inadequate lubrication.◀

Parking brake*/
Brake hydraulic system ●
Comes on when you engage the parking brake. For additional information: refer to page 64.

Comes on although the parking brake is released: have the brake fluid level checked. Before continuing your journey, be sure to read the notes on pages 135 and 146.

Also comes on in the Check Control with the message "CHECK BRAKE LININGS".

Parking brake warning lamp*/
Brake hydraulic system warning lamp for Canadian models.

Tire Pressure Monitor (RDC)* ●
In addition, an acoustic signal is sounded: a flat tire has occurred. Reduce vehicle speed immediately and stop the vehicle. Avoid hard brake applications. As you steer the vehicle, use caution and avoid overcorrecting.
For additional information: refer to page 98

Red or yellow: continue to drive; drive cautiously

If the brake warning lamp comes on red together with the yellow warning lamps for ABS and DSC:
Continue to drive; drive cautiously and defensively and avoid full brake applications.
Have the system checked by the nearest BMW Sports Activity Vehicle center.
For additional information: refer to pages 92 and 134.

If all three warning lamps come on yellow:
Continue to drive; drive cautiously and defensively and avoid full brake applications.
Have the system checked by your BMW Sports Activity Vehicle center as soon as possible.

Warning lamps for Canadian models.

Red: an important reminder

CarManuals2.com

Parking brake*
Comes on when the parking brake is engaged.
For additional information: refer to page 64.

Parking brake warning lamp* for Canadian models.

Please fasten safety belts ●
Together with an acoustic signal or a message* in the Check Control. Comes on until the safety belts are fastened. For additional information on safety belts: refer to page 49.

Airbags ●
Please have the system inspected by your BMW Sports Activity Vehicle center.
For additional information: refer to page 55.

Yellow: check as soon as possible

Antilock Brake System (ABS) ●
ABS has been deactivated in response to system malfunction. Conventional braking performance remains available with no loss of efficiency. Please have the system inspected by your BMW Sports Activity Vehicle center.
For additional information: refer to page 134

ABS warning lamp for Canadian models.

Engine oil level
Comes on while driving:
The oil level is at the absolute minimum; refill as soon as possible. Do not drive more than approx. 30 miles (50 km) until you do.
For additional information: refer to page 143.

Engine oil level
Comes on after the engine has been switched off: add engine oil at your earliest opportunity (when you stop to refuel).
For additional information: refer to page 143.

Indicator and warning lamps

Automatic transmission*
Because of a malfunction, the automatic transmission shifts only in the emergency program. Please consult the nearest BMW Sports Activity Vehicle center.
For additional information: refer to page 68.

Brake pads* ●
Have the brake pads checked.
For additional information: refer to page 135.

Variable Ride Height* ●
Variable Ride Height is inactive. Please consult the nearest BMW Sports Activity Vehicle center.
For additional information: refer to page 95

BRAKE

Dynamic Brake Control (DBC) ●
Fault in the DBC system. Conventional braking performance remains available with no loss of efficiency. Please have the system checked and repaired by your BMW Sports Activity Vehicle center.
For additional information: refer to page 93

Dynamic Brake Control (DBC) warning lamp for Canadian models

Dynamic Stability Control (DSC) ●
Indicator lamp flashes:
The system is active and governs drive and braking force.
The warning lamp comes on and stays on while driving:
DSC has been switched off with the button. If, after repeatedly pressing the DSC button, the warning lamp still does not go off, then that means that the DSC, HDC and the vehicle's road-holding ability are defective.
Please have the system checked by the nearest BMW Sports Activity Vehicle center.
For additional information: refer to pages 92 and 94.

CarManuals2.com

EML

Engine electronics*
There is a fault in the engine's electronic control system. You can continue to drive with reduced engine output or engine speed. Please have the system inspected by your BMW Sports Activity Vehicle center.

Tire Pressure Monitor (RDC)* ●
Check tire inflation pressures, refer to pages 26, 98

SERVICE ENGINE SOON

Service Engine Soon ●
If the indicator lamp comes on either continuously or intermittently, this indicates a fault in the emissions-related electronic systems. Although the vehicle remains operational, you should have the systems checked by your BMW Sports Activity Vehicle center at the earliest possible opportunity.
For additional information: refer to page 149.

Service Engine Soon warning lamp for Canadian models.

CHECK FILLER CAP

Check Filler Cap* ●
If the indicator lamp comes on although the fuel cap is secured correctly: this indicates a malfunction in the fuel system. Have the system inspected by your BMW Sports Activity Vehicle center at the earliest opportunity.
Additional information: refer to page 25

Green: for your information

Turn signal indicators
Flashes when the turn signal indicators are operated. Rapid flashing indicates a system malfunction.
For additional information: refer to page 68.

Cruise control
Comes on when the cruise control is activated: available for operation via the steering wheel with multifunction buttons.
For additional information: refer to page 71.

Fog lamps
Lights up whenever you switch on the fog lamps.
For additional information: refer to page 101.

Blue: for your information

High beams
Lights up when the high beams are on or the headlamp flasher is actuated.
For additional information: refer to pages 68 and 101.

CarManuals2.com

Steering wheel with multifunction buttons

The buttons integrated in the steering wheel are provided so that you can operate a number of accessories quickly and without being distracted from traffic conditions. You may operate:

- ▷ Selected control functions for the radio along with CD and cassette player
- ▷ The recirculated-air mode of the air conditioner or the steering-wheel heating*
- ▷ The cruise control,
- ▷ Selected phone functions* and
- ▷ The voice entry*

▷ In order to operate a system, the corresponding system must be switched on.◀

Press briefly:
Accept incoming call, start dialing, terminate call.
Extended pressure:
Activate/deactivate voice entry.

R/T

Switch between phone and radio, cassette and CD.

Forward:

- ▷ Radio
  Press briefly: scans for stations in FM band
  Extended pressure: search function
- ▷ CD
  Press briefly: jump to next track
  Extended pressure: fast forward in track
- ▷ Cassette
  Press briefly: stop track scan or fast forward
  Extended pressure: fast forward
- ▷ Phone
  Scan personal phone book.

Rewind: functions as for fast forward.

Volume

Cruise control: calling up.

Cruise control: store and accelerate (+); decelerate and store (–).

I/0

Cruise control: activate/interrupt/deactivate.

Recirculated-air mode and automatic recirculated-air control (AUC) or heated steering wheel: switch on/off.

CarManuals2.com

Warning triangle*

1. Open the cover on the left in the cargo area: lift the handle on the cover
2. Pull the tab of the retaining strap (arrow) and remove the hazard warning triangle from the support bracket
3. To install: slide the hazard warning triangle into the support bracket and press on the retaining strap.

Always observe all legal regulations requiring a warning triangle to be carried in the vehicle.◀

First-aid kit*

The first-aid kit is located under the front passenger's seat.

To open: pull the handle and fold the cover down.

To close: fold the cover up.

CarManuals2.com

Some of the articles in the first-aid kit may be used within a limited time only. For this reason, check the expiration dates of each of the items regularly, and replace any whose expiration dates have passed. You can acquire replacements in any drugstore or pharmacy.
Always observe all legal regulations requiring a first-aid kit to be carried in the vehicle.◀

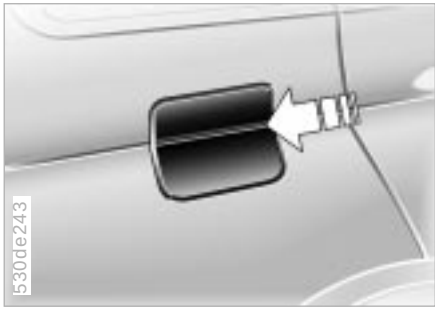

When handling fuels, comply with all of the applicable safety precautions and regulations pertaining to fuels. Never carry spare fuel containers in your vehicle. Whether empty or full, these containers can leak, cause an explosion, or lead to fire in the event of a collision.◀

CarManuals2.com

Fuel filler door

Before filling the tank, switch off the engine. If you do not, fuel cannot be filled into the tank and the "Service Engine Soon" lamp may come on.◀

To open the fuel filler door, press on the front edge.

In the event of an electrical malfunction, you can also open the fuel filler door manually:

1. Open the cover on the right in the cargo area: lift the handle on the cover
2. Pull the knob with the fuel pump symbol.

Simple and environmentally friendly

Open the filler cap carefully to prevent fuel from spraying out. Fuel spray may cause injury.
Do not top off. Topping off may cause fuel spillage.◀

Keep the filler cap in the bracket attached to the fuel filler door.

When refueling, insert the filler nozzle completely into the filler pipe. Pulling the nozzle out of the pipe during refueling

▷ results in premature pump shutoff
▷ and will reduce the effect of the vapor recovery system on the pump.

Refueling

As long as the filler nozzle is used properly, the fuel tank is full whenever the nozzle shuts off the first time.

To prevent damage to the catalytic converter, do not drive until the fuel tank is empty.◀

Tank capacity: approx. 24.6 gal. (approx. 93 liters), with a reserve capacity of

- ▷ 6-cylinder engine: approx. 2.0 gal. (approx. 8 liters)
- ▷ 8-cylinder engine: approx. 2.5 gal. (approx. 10 liters).

Close the filler cap carefully after refueling until a "click" is heard. While closing, be sure not to squeeze the strap which is fastened to the cap. A loose or missing cap will activate the message "CHECK FILLER CAP" in the Check Control* or the "Check Filler Cap" lamp*.◀

Fuel specifications

The engine uses lead-free gasoline only.

CarManuals2.com

Required fuel:

- ▷ Premium Unleaded Gasoline, min. 91 AKI.

AKI = Anti Knock Index

Do not use leaded fuels. The use of leaded fuels will cause permanent damage to the system's oxygen sensor and the catalytic converter.◀

Tire inflation pressures

You will find tire inflation pressures on the inside door pillar.

Check tire pressures

All pressure specifications are indicated in psi (kilopascal) for tires at ambient temperature (refer also to the next page).

Vehicles with Tire Pressure Monitor (RDC)*:
After correcting the inflation pressures, reactivate the system, refer to page 98.

Check tire inflation pressures regularly – at least every two weeks and before beginning a longer trip. Incorrect tire pressure can otherwise lead to tire damage and accidents. Check the tire inflation pressure of the spare tire. Inflate the spare tire to the highest inflation of any tire on your vehicle.◀

CarManuals2.com

Comply with tire approval specifications

The inflation pressures in the table apply to tire sizes and tires from BMW-approved manufacturers. Your BMW Sports Activity Vehicle center is familiar with these pressures. Higher pressures may be specified for tires from other manufacturers.

Your vehicle is equipped with tires that not only meet US standards, but also European standards. We recommend the exclusive use of BMW-approved tires.

Tire inflation pressures

BMW	Tires All pressure specifications in the table are indicated in psi (kilopascal) with cold tires (cold = ambient temperature)				
X5	All sizes	32 (220)	32 (220)	32 (220)	39 (270)

CarManuals2.com

CarManuals2.com

Overview

Controls and features

Operation, maintenance

Owner service procedures

Technical data

Index

CarManuals2.com

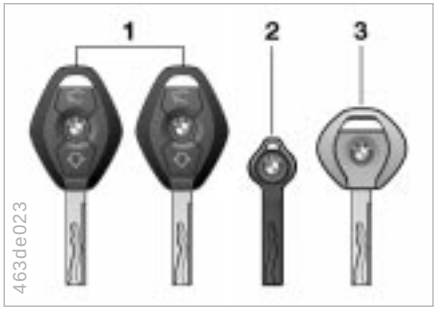

The key set

1 The master keys with remote control determine the functions of the Key Memory, refer to page 61.
You can mark individual keys for subsequent identification by applying the colored decals that you received when accepting delivery of your vehicle.

▷ There is an extended-life battery in every master key which is charged automatically in the ignition lock as you drive.
For this reason, if you have a master key that is otherwise not used, use that key approx. once every year while driving for an extended period. This will charge the battery, refer also to page 32.◀

2 Spare key for storage in a safe place, such as in your wallet. This key is not intended for continuous use

3 Door and ignition key
The lock for the glove compartment cannot be operated with this key. This is recommended for valet parking, for instance.

CarManuals2.com

Central locking system

The concept

The central locking system is ready for operation as soon as you close the front doors. The system engages and releases the locks on the

▷ doors
▷ liftgate/tailgate
▷ fuel filler door.

The central locking system can be operated

▷ from outside via the driver's door lock as well as via the remote control
▷ from inside via the button for the central locking system.

If the system is locked from inside, the fuel filler door remains unlocked, refer to page 35.

When the system is actuated from outside of the vehicle, the anti-theft system is actuated simultaneously. The alarm system is also armed or disarmed.

In the event of an accident, the central locking system unlocks automatically (only those doors which were not locked separately with the safety lock buttons), refer to page 35. In addition, the hazard warning flashers and interior lamps come on.

Opening and closing – via the door lock

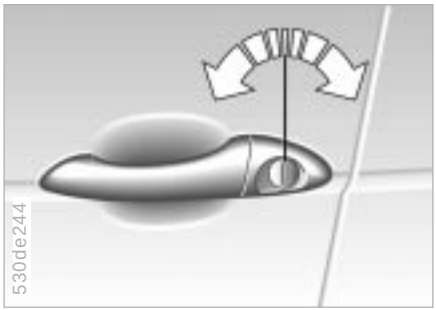

Using the key

One turn of the key in the driver's door lock unlocks the driver's door only. Turning the key a second time unlocks all of the remaining doors, the liftgate/ tailgate and the fuel filler door.

You can have an acknowledgment signal set to confirm that the vehicle is correctly closed.◀

Convenience operation

You can also operate the windows and sliding/tilt sunroof via the door lock.

▷ To open: with the door closed, turn the key to the "Unlock" position and hold it

▷ To close: with the door closed, turn the key to the "Lock" position and hold it.

Watch during the closing process to be sure that no one is inadvertently injured. Releasing the key stops the operation.◀

Manual operation

(in the event of an electrical malfunction)

Turn the key to the extreme left or right to unlock/lock the door.

CarManuals2.com

Opening and closing – via the remote control

The concept

The remote control offers you optimal convenience in using your vehicle's locking system while also providing three exclusive supplementary features:

- ▷ Switch on the interior lamps, refer to page 33.
  With this function, you can also "search for" your vehicle — when parked in an underground garage, for instance
- ▷ Open the liftgate, refer to page 33.
  The liftgate will open slightly, regardless of whether it was previously locked or unlocked
- ▷ Panic mode, refer to page 33.
  In case of danger, you can trigger an alarm.

Whenever you unlock (lock) the vehicle, you simultaneously deactivate (activate) the anti-theft system, disarm (arm) the alarm system and switch the interior lamps on (off).

You can have an acknowledgment signal set to confirm that the vehicle is correctly closed.◀

1 Unlock, convenience opening and alarm system

2 Lock and secure, interior lamp activation, switching off tilt alarm sensor and interior motion sensor

3 Open the liftgate, panic mode

Master keys with remote control unit

Children might be able to lock the doors from the inside. For this reason, always take the vehicle's keys with you so that the vehicle can be opened again from the outside at any time.◀

Master keys that are used repeatedly are always ready for operation since the battery in the key is charged automatically in the ignition lock as you drive.
If it is no longer possible to lock the vehicle via the remote control, the battery is discharged. Use this key while driving for an extended period in order to charge the battery, refer also to page 30.
To prevent unauthorized use of the remote control, surrender only the door and ignition key 3 or the spare key 2 (refer to page 30) when leaving the vehicle for valet parking, for example.
In the event of a system malfunction, please contact your BMW Sports Activity Vehicle center. You can also obtain replacement keys there.◀

CarManuals2.com

Opening and closing – via the remote control

To unlock

Press button.

Press the button once to unlock the driver's door only; press a second time to unlock all remaining doors as well as the tailgate/liftgate and fuel filler door.

Convenience opening mode

Press and hold button. The power windows and sliding/tilt sunroof are opened.

To lock and secure

Press button.

To switch on the interior lamps

After locking the vehicle, press button again.

To switch off the tilt sensor alarm and interior motion sensor

Press button a second time immediately after locking.
For additional information: refer to page 40.

To open the liftgate

Press button.

Before and after a trip, be sure that the tailgate/liftgate was not opened unintentionally.◀

Panic mode

By pressing and holding the button for more than two seconds, you can trigger an alarm via the alarm system if there is an impending danger (the alarm system must be armed).

To switch off the alarm

Press button.

CarManuals2.com

System interference

The remote control system may be affected by other units or equipment operating in the immediate vicinity of your vehicle.
If this should occur, you can unlock and lock the vehicle via the door lock with a master key.

For US owners only

CarManuals2.com

The transmitter and receiver units comply with part 15 of the FCC (Federal Communication Commission) regulations. Operation is governed by the following:

FCC ID: LX8EWS
LX8FZVS
LX8FZVE

Compliance statement:
This device complies with part 15 of the FCC Rules. Operation is subject to the following two conditions:

▷ This device may not cause harmful interference, and
▷ this device must accept any interference received, including interference that may cause undesired operation.

▷ Any unauthorized modifications or changes to these devices could void the user's authority to operate this equipment.◀

You can operate the central locking system with this button when the driver's door is closed. The doors and liftgate are unlocked or locked only. However, the anti-theft system is not activated. Also, the fuel filler door remains unlocked to allow refueling.

If only the driver's door was unlocked from the outside and you press the button

- ▷ all other doors, the tailgate/liftgate and the fuel filler door will be unlocked when the driver's door is opened
- ▷ the driver's door will be locked again when it is closed.◀

To unlock and open the doors

CarManuals2.com

- ▷ Either unlock the doors together with the button for the central locking system and then pull the door handle above the armrest
  or
- ▷ pull the release handle for each door twice: the first pull unlocks the door, and the second one opens it.

To engage the locks

- ▷ Use the central locking button to lock all of the doors simultaneously,
  or
- ▷ press down the individual safety lock buttons. The fuel filler door remains unlocked. As an added design feature to prevent the driver from being inadvertently locked out of the vehicle, the driver's safety lock button will not engage as long as the door is open.

When the vehicle is moving, do not lock the doors with the safety lock buttons. Doors locked in this manner would not unlock automatically in the event of an accident.
Since passengers or animals remaining in the vehicle might be able to lock the doors from the inside, take the vehicle's keys with you so that the vehicle can be opened again from the outside at any time.◀

To open from the outside

Press the button (arrow):
The liftgate opens slightly.

The cargo area is illuminated whenever the liftgate is opened, refer also to page 102.

When the liftgate is opened, the clearance from the ground to the upper edge is more than 6.6 ft (2 m). Please keep this in mind when opening the tailgate (in a garage, for example).◀

Opening from inside the vehicle

Press this button to open the liftgate when the vehicle is stationary.

If pointed or sharp-edged objects could strike the rear window while driving, be sure to provide protection around all edges. If you do not do this, the heating conductors of the rear window could be damaged.◀

For information on the cargo area cover and on other details in the cargo area, refer to "Cargo area", beginning on page 122.

Manual release

In the event of an electrical malfunction, you can release the liftgate manually:

1. Remove the plastic plug from inside the cargo area and pull toward the interior (arrow). The liftgate will be released
2. Reinstall the plug.

CarManuals2.com

Liftgate

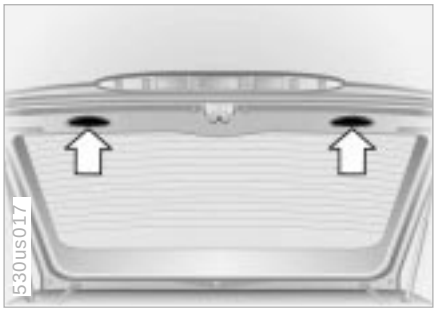

To close

You can pull the liftgate down by placing both hands in the handle recesses (arrows).

To avoid injuries, be sure that the travel path of the liftgate is clear when it is closed, as with all closing procedures.◀

Operate the vehicle only when both gates are completely closed. Otherwise, exhaust fumes could penetrate the interior of the vehicle. Should it be absolutely necessary to operate the vehicle with an open gate:

▷ Close all windows. Shut the sliding/tilt sunroof

▷ Increase the air supply for the air conditioner or automatic climate control to a high level, refer to page 104 or 108.◀

Tailgate

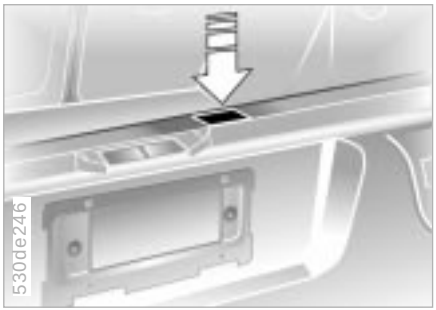

To open

Press the button:
You can fold the tailgate down.

When opened, the tailgate can accept loads of up to 440 lbs (200 kg). When the vehicle is parked, you may utilize the tailgate as a seat or as a loading platform for luggage or recreation gear, for example.◀

CarManuals2.com

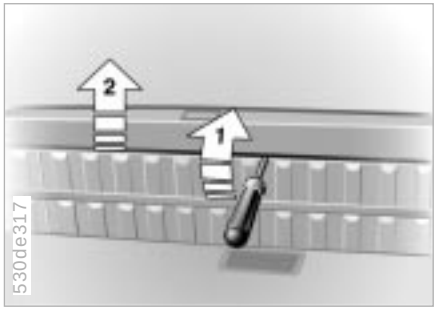

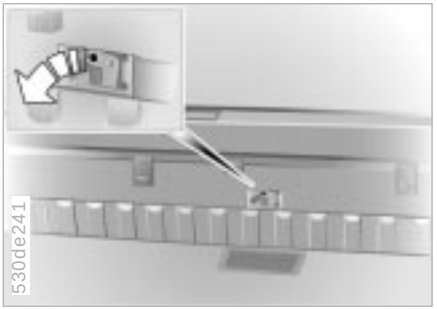

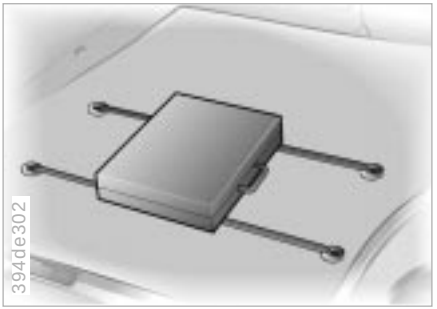

Manual release

In the event of an electrical malfunction, you can release the tailgate manually:

1. Unfasten the trim panel clip with the vehicle key or with a screwdriver (arrow 1) and remove it toward the top (arrow 2)
2. Using the same tool, press the latch in the direction of the arrow; the tailgate is released
3. Reinstall the trim panel.

CarManuals2.com

Luggage straps

Use the retaining straps on the cargo area floor to secure smaller items of luggage.

Movement is reduced when objects are placed on the straps.

The lashing eyes located at the corners of the cargo area provide you with a convenient means of attaching luggage nets* or flexible straps for securing luggage.

Refer also to "Stowing cargo" on page 127.

The concept

The vehicle alarm system responds:

- ▷ When a door, the hood, or the liftgate is opened
- ▷ To movement inside the vehicle (interior motion sensor)
- ▷ To variations in the vehicle tilt angle such as occur during attempts to steal the wheels or tow the vehicle
- ▷ To interruption of battery voltage.

The system responds to unauthorized vehicle entry and attempted theft by simultaneously activating the following:

- ▷ Sounding an acoustical alarm for 30 seconds
- ▷ The hazard warning flashers are activated for approx. five minutes
- ▷ The high beams flash on and off in the same rhythm.

To arm and disarm the alarm system

When the vehicle is locked or unlocked with the key or the remote control, the alarm system is also simultaneously armed or disarmed.

You can have different acknowledgment signals set to confirm system arming and disarming.◀

You can still open the liftgate after the system has been armed by pressing the button of the remote control, refer to page 33. When you close the liftgate, it is secured again.

Indicator lamp displays

- ▷ The indicator lamp below the interior rearview mirror flashes continuously: the system is armed
- ▷ The indicator lamp flashes during arming: the door(s), the hood or liftgate are not completely closed. Even if you do not close the alerted area, the system begins to monitor the remaining areas, and the indicator lamp flashes continuously after 10 seconds. However, the interior motion sensor is not activated
- ▷ If the indicator lamp goes out when the system is disarmed: no manipulation or attempted intrusions have been detected in the period since the system was armed

CarManuals2.com

▷ If the indicator lamp flashes for 10 seconds when the system is disarmed: an attempted entry has been detected in the period since the system was armed.

Following triggering of an alarm, the indicator lamp will flash continuously.

Avoiding unintentional alarms

The tilt alarm sensor and interior motion sensor may be switched off at the same time. To prevent a false alarm from being triggered (in garages with elevator ramps, for instance), or when the vehicle is transported by trailer or train:

Actuate (= arm the system) the lock twice; in other words, press button 2 of the remote control twice in succession, refer to page 33. You may also actuate the locks twice with the key, refer to page 31.
The indicator lamp lights up briefly and then flashes continuously. The tilt alarm sensor and the interior motion sensor are deactivated as long as the system is armed.

Interior motion sensor

CarManuals2.com

In order for the interior motion sensor to function properly, the windows and sliding/tilt sunroof must be completely closed.

However, be sure to switch off the interior motion sensor (see the previous column) when you

▷ leave children or animals in the vehicle
▷ intend to leave the windows or sliding/tilt sunroof open.

Electric power windows

Open and close windows

From ignition key position 1:

▷ Press the switch up to the pressure point:
The window continues to move as long as you continue to hold the switch
▷ Press the switch beyond the pressure point:
The window moves downward automatically. Touch the switch again to stop the opening movement.

You can close the windows in the same manner by pulling the switch.

After the ignition has been switched off:

▷ You can still operate the windows as long as neither of the front doors has been opened. To open the windows, press the switch beyond the pressure point.

⚠ Remove the key from the ignition lock and close the doors when you leave the vehicle so that children cannot operate the power windows and possibly injure themselves.◀

For the convenience mode via the door lock or the remote control, refer to page 31 or page 33.

Safety feature

A contact strip is integrated into the inner side of each of the upper window frame sections. If pressure is exerted against this contact strip while a window is being raised, the system will respond by stopping the window and then retracting it a small distance.

⚠ Despite this safety feature, be extremely careful that the closing path of the window is not obstructed whenever it is closed. Otherwise, an object might not touch the contact strip in some situations (with very thin objects, for instance).
You can override this safety feature by pulling the switch beyond the pressure point and holding it.
Because the power windows are sealed at high pressure to prevent wind noise when closed, a powerful motor is required for efficient closing. When closing the windows, always ensure that they are not obstructed in any way. Unsupervised use of these systems can result in serious personal injury.
Remove the ignition key to deactivate the electric power windows whenever you leave the vehicle. Never leave the keys in the vehicle with unsupervised children. Never place anything that could obstruct the driver's vision on or next to the windows.◀

CarManuals2.com

Safety switch

With the safety switch, you can prevent the rear windows from being opened or closed via the switches in the rear passenger area (by children, for example). You can also prevent adjustments of the power rear-seat backrests from the rear passenger area, refer to page 48.

⚠ Press the safety switch whenever children are riding in the rear of the vehicle. Careless use of the power windows can lead to injury.◀

Sliding/tilt sunroof with glass moonroof*

To prevent injuries, exercise care when closing the sliding/tilt sunroof and keep it in your field of vision until it is shut.
Before leaving the vehicle, switch off the electric sunroof mechanism by removing the ignition key. Do not leave children unattended in the vehicle with access to vehicle keys. Use of the key can result in starting of the engine and operation of vehicle systems such as the power sunroof, etc. Unsupervised use of these systems can result in serious personal injury.◀

For the convenience mode via the door lock or the remote control, refer to page 31 or 33.

Lifting – Opening – Closing

With the ignition key in position 1 or higher, press the switch or slide it in the desired direction until you feel resistance.

The headliner slides back somewhat when you raise the sunroof. When the sunroof is opened the headliner retracts with it. It remains open, and it is possible to slide it back and forth as long as the sunroof is not completely open.

The headliner insert cannot be closed with the sliding/tilt sunroof in its raised position.◀

After the ignition has been switched off, you can still operate the sliding/tilt sunroof as long as neither of the front doors has been opened.

Carmanuals2.com

Automatic* opening and closing

Press the switch briefly past the pressure point and then release it.

Other automatic operations are:

▷ With the sunroof open, press the switch briefly toward "Lift": the sunroof automatically extends to its fully raised position.

Pressing the switch again briefly stops the motion.

▷ With the sunroof raised, hold the switch toward "Open" until the roof has reached the desired position.

Safety feature

If the sliding/tilt sunroof encounters resistance at a point roughly past the middle of its travel when it is closing, the closing cycle is interrupted and the sliding/tilt sunroof will open again slightly.

Despite this safety feature, be extremely careful that the closing path of the sunroof is not obstructed whenever it is closed. Otherwise, triggering the closing-force limitation may not be ensured in some situations (with very thin objects, for instance). You can disable this safety feature by pressing the switch beyond the pressure point and holding it.◀

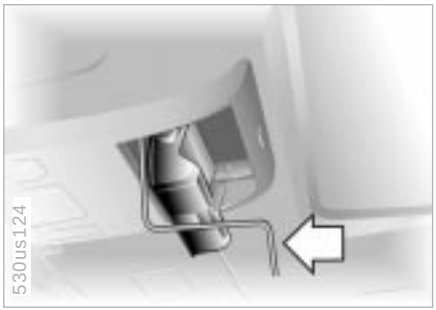

Power loss

After interruptions in the electrical supply (when the battery is disconnected, for instance), the sunroof may only lift. To reinitialize the mechanism:

1. Raise the sliding/tilt sunroof fully
2. Press and hold the switch for approx. twenty seconds.

CarManuals2.com

Manual operation

In the event of an electrical malfunction, you can operate the sliding/tilt sunroof manually:

1. Open the glasses compartment, refer to page 118
2. Insert the Allen wrench from the vehicle tool kit (refer to page 152) in the opening provided and turn the sliding/tilt sunroof in the desired direction.

Correct sitting posture

The condition for relaxed, fatigue-free driving is a seating position adjusted to your needs. Together with the safety belts and the airbags, the correct seating position increases the passive safety of the occupants in the case of an accident. Therefore, observe the following instructions, as otherwise the protective function of the safety systems may be impaired.

For additional information on transporting children, refer to page 58.

Sitting correctly with airbags

Maintain a distance to the airbags. Always hold the steering wheel by the rim to keep any chance of injury to hands or arms to an absolute minimum, should the airbag be deployed. No one and nothing is to come between the airbags and the seat occupant. Do not use the cover of the front airbag on the front passenger side as a storage area for objects, or as a rest for feet or legs.◀

For the location of the airbags and additional information, refer to page 55.

Safe with safety belts

Carmanuals2.com

Never allow more than one person to wear a single safety belt. Never allow infants or small children to ride in a passenger's lap. Avoid twisting the belt while routing it firmly across the pelvis and shoulder, wear it as snugly against your body as possible. Do not allow the belt to rest against hard or fragile objects in your pockets. Never route the belt across your neck, do not run it across sharp edges and ensure that the belt does not become caught or jammed. Avoid wearing bulky clothing and pull on the lap belt periodically to retension it over your shoulders. In the event of a frontal impact, a loose lap belt could slide over your hips, leading to abdominal injury. In addition, the safety belt's restraint effectiveness is reduced if the belt is worn loosely. Expectant mothers should always wear their safety belts, taking care to position the lap belt against the lower hips, where it will not exert pressure against the abdominal area.◀

For instructions on operating the safety belts, refer to page 49.

Seats

Observe the following before adjusting

Never try to adjust your seat while operating the vehicle. The seat could respond with unexpected movement, and the ensuing loss of vehicle control could lead to an accident. Never ride with the backrest reclined to an extreme horizontal angle (especially important for front passengers to remember). Keep the backrest relatively upright to minimize the risk of "sliding under" the safety belt and sustaining injury in an accident.◀

Seat adjustment

- ▷ Mechanical seat adjustment, refer to page 45
- ▷ Power seat adjustment, refer to page 46
- ▷ Head restraints, refer to page 47
- ▷ Power rear backrest adjustment, refer to page 48

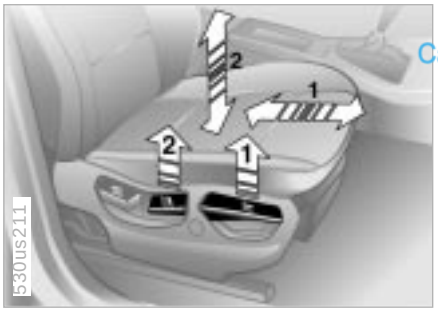

CarManuals2.com

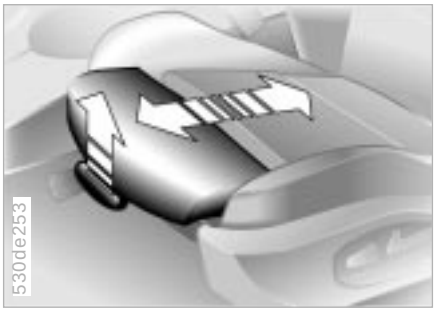

Seat adjustment

1 Backward/forward adjustment
Pull the lever and slide the seat to the desired position.
After you release the lever, move the seat forward or backward slightly so that it engages fully

2 Cushion height
Pull the lever and apply weight to or remove weight from the seat as required

3 Backrest angle
Pull the lever and apply weight to or remove weight from the backrest as required.

Comply with the adjustment instructions on page 44. Failure to do so could result in diminished personal safety.◀

Adjusting the BMW sports seat*

You can adjust the thigh support additionally:

Pull the lever and adjust the position of the thigh support for your personal comfort.

1 Tilt angle (driver's seat only)

2 Backward/forward adjustment

3 Cushion height

4 Backrest angle

Adjust the head restraint manually.

Comply with the adjustment instructions on page 44. Failure to do so could result in diminished personal safety.◀

Adjusting the BMW comfort seat*

This seat allows you to make additional adjustments for:

1 Lumbar support

2 Shoulder support

3 Head restraint height

Lumbar support:

You can adjust the backrest's contour for additional support in the curvature of your spine's lumbar region.

The upper hips and spinal column receive supplementary support to help you maintain a relaxed, upright posture.

▷ Press the front/rear of the switch:
Increase/decrease curvature

▷ Press the upper/lower end of the switch:
Increase the upper/lower curvature.

Shoulder support:

Move the switch in the direction of the arrow to adjust the tilt angle of the shoulder support.

You can use the adjustable upper backrest for supplementary support in the shoulder region. This provides a relaxed driving position and helps relieve stress on the shoulder muscles.

To obtain the optimal shoulder support position, we recommend:

Driver and front passenger:

1. Adjust the upper backrest section to its extreme rear position
2. Adjust for the optimal sitting position as described on page 44
3. Bring the upper backrest section further forward until your shoulders are well supported.

Front passenger's seat adjusted for relaxed traveling:

1. Adjust the upper backrest section to its extreme rear position
2. Tilt the backrest down to a slightly more horizontal angle
3. Bring the upper backrest section forward until your shoulders are well supported.

Make corrections in the forward/backward adjustment of the seat to ensure that the safety belt still fits firmly against your body. If you do not do this, the protection provided by the safety belt may be reduced.◀

Head restraint height:

Move the switch in the desired direction.

CarManuals2.com

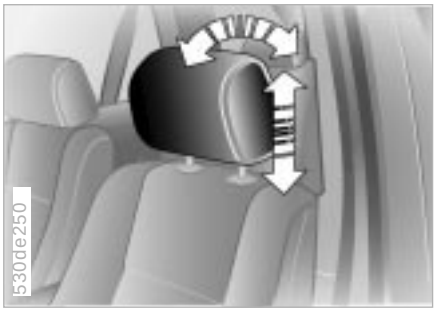

Adjustments

To adjust the angle of the front head restraints, tilt the head restraint to the desired angle.

To adjust the height of the front or rear head restraints, pull the head restraint up or push it down.
Power electric height adjustment, refer to page 46.

Head restraints reduce the risk of spinal injury in the event of an accident. Adjust the head restraint so that its center is approximately level with your ears.◀

Head restraints

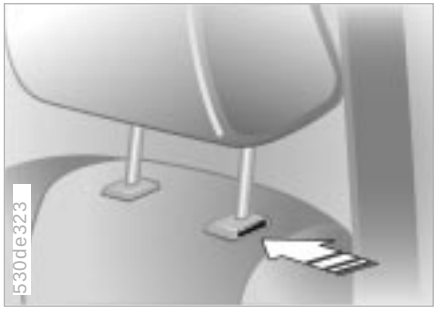

Removal – front

1. Pull the head restraint upward to the stop
2. Press the button (arrow) and remove the head restraint.

Installation – front

1. Press the button (arrow) and insert the head restraint into the guides
2. Adjust the head restraint for your personal comfort.

Removal and installation – rear

To remove the head restraint, pull it outward with a firm movement. To install it, press it down firmly.

Power rear-seat backrest adjustment*

CarManuals2.com

You can make separate adjustments of the backrest tilt angle on the right and left sides.
You can select a comfortable sitting position and also increase the capacity of the cargo area by moving the backrests into their most upright position.

From the rear seats: press the corresponding switch.

▷ You can prevent adjustments of the power rear-seat backrest from the rear passenger area with the safety switch for the power windows, refer to page 41.◀

From the cargo area: the switches are located on both sides of the cargo area.

Drive with your safety belt on

Even though there is an airbag, wear a safety belt every time you get in the vehicle, because airbags enhance safety by providing added protection.

To close

Make sure you hear the lock engage in the belt buckle.

To open

1. Press the red button in the buckle
2. Hold the belt
3. Guide the belt back into its reel.

In the rear, the belt buckle with the word "CENTER" is intended exclusively for passengers sitting in the middle. If it is not possible to extract the center belt, this indicates that the larger backrest is not securely locked, refer to page 122.◀

CarManuals2.com

Safety belt height adjustment

You can adjust the safety belts to fit your own physical dimensions by using the safety belt height adjustment.

Slide the button up or down as required.

Also observe the instructions on adjusting the seats on page 44.

If the safety belt system has been subjected to the stresses involved in an accident or otherwise damaged: Have the entire safety belt system replaced by your BMW Sports Activity Vehicle center. In addition, have your BMW Sports Activity Vehicle center inspect the safety belt anchors. Otherwise, the safety function can no longer be ensured.◀

Seat, mirror and steering wheel memory*

You can store and call up three different seat, exterior mirror and steering wheel positions. The illustration shows the buttons on the seat for making these position adjustments.

The adjustment of the lumbar support is not stored in the memory.

To store

1. Turn the ignition key to position 1 or 2
2. Adjust the desired positions for the seat, exterior mirror and steering wheel
3. Press the MEMORY button: the indicator lamp in the button comes on
4. Press memory button 1, 2 or 3, as desired: the indicator lamp goes out.

CarManuals2.com

To call up a stored setting

Convenience function:

1. Open the driver's door after unlocking the vehicle or place the ignition key in position 1
2. Briefly press memory button 1, 2 or 3, as desired.
   Movement stops immediately when one of the seat-adjustment or memory buttons is activated during the adjustment process.

Security function:

1. With the driver's door closed and the ignition key either removed or in position 0 or 2
2. Maintain pressure on the desired memory button (1, 2 or 3) until the adjustment process is completed.

If you press the MEMORY button accidentally: press the button a second time – the indicator lamp goes out.

Do not call up a position from the memory while the vehicle is moving. There is a risk of accident from unexpected movement of the seat or steering wheel.◀

Seat, mirror and steering wheel memory*

Your BMW Sports Activity Vehicle center can adjust your vehicle's systems in such a manner that your personalized settings are automatically called up for the seat, mirror and steering wheel positions when you unlock the vehicle with your personal remote control key.◀

If you make use of the Key Memory, be sure that the footwell behind the driver's seat is unobstructed before unlocking the vehicle. If you fail to do so, persons or objects could be injured or damaged if the seat should move backward.◀

Passenger side exterior mirror tilt function

(automatic curb monitor)

1. Move the mirror selector switch (arrow) to the "driver's mirror" position
2. When the gearshift lever or the selector lever is placed in "Reverse", the passenger-side mirror tilts downward to help the driver monitor the area directly adjacent to the vehicle during parking (curbs, etc.).

You can deactivate this automatic feature by setting the mirror selector switch to the "passenger side" position.

CarManuals2.com

Seat heating*

Front

The seat cushion and backrest can be heated when the ignition key is in position 2.

You can call up different heating modes by repeatedly pressing the button.

You can also switch the higher heating modes off directly:
Press the button and hold it slightly longer.

Seat heating*

Rear

The function is the same as for front seat heating. You can select between two heating modes.

Adjusting steering wheel

The steering wheel can be moved in any of four directions. Adjust the wheel by moving the control lever in the desired direction.

CarManuals2.com

Do not adjust the steering wheel while the vehicle is moving. If you do so, there is a risk of accident from unexpected movement.◀

To store the steering wheel setting, refer to "Seat, mirror and steering wheel memory" on page 50.

Automatic steering wheel adjustment

(only in conjunction with seat, mirror and steering wheel memory)

In order to make it easier to get into and out of the vehicle, the steering wheel automatically moves into the top position and returns to the driving (memory) position.

This automatic feature is controlled by the position of the ignition key and by the driver's door.

Steering wheel heating*

Steering wheel heating functions in ignition key position 2.

Press the button to activate or deactivate this system.

The lamp within the button lights up when the steering wheel heating is in operation.

If you have a steering wheel with multifunction buttons without steering wheel heating, the button for the recirculated-air mode is in this location, refer to page 22.

Mirrors

CarManuals2.com

Exterior mirrors

1 Mirror switch for 4-way adjustment

2 Left/right selector switch

Before going through a car wash, manually fold the exterior mirrors inward, otherwise they could be damaged, depending on the width of the car wash system.◀

Adjusting manually

You can also adjust the mirrors manually:
Press on the outer edges of their lenses.

To store the mirror settings, refer to "Seat, mirror and steering wheel memory" on page 50.

Convex mirror

The passenger-side mirror features a convex lens. When estimating the distance between yourself and other traffic, bear in mind that the objects reflected in the mirror are closer than they appear. This means that estimations of the distance to following traffic should not be regarded as precise.◀

Self-defrosting mirrors

Both mirrors are defrosted automatically when the ignition key is in position 2.

Interior rearview mirror

To reduce glare from vehicles behind you when you are driving at night, tilt the mirror by turning the button.

Interior and exterior rearview mirror with automatic dimmer*

These mirrors automatically dim through an infinitely-variable range. They automatically revert to their undimmed mode whenever the transmission is placed in reverse gear or selector lever in "Reverse".

There are two photocells located in the interior rearview mirror for this purpose. One photocell (arrow) is in the mirror glass, while the other is offset somewhat on the back of the mirror.

For trouble-free operation, keep the photocells clean and do not cover the area between the interior rearview mirror and the windshield. Do not attach any kind of stickers on the windshield in front of the mirror, either.

CarManuals2.com

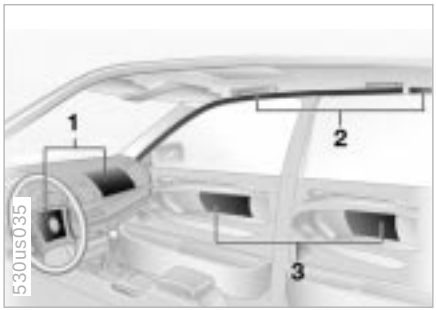

1 Front airbag for driver and front passenger
2 Side Impact Head Protection System for driver and passenger sides (front and rear*)
3 Side airbags for driver and passenger sides (front and rear*)

Protective effect

The front airbags supplement the safety belts by providing additional protection for the front-seat occupants in the event of a severe frontal impact in which the protection afforded by the safety belts alone may no longer be sufficient. The Side Impact Head Protection System and the side airbags help provide protection in the event of a side impact. Each of the side airbags is designed to help support the upper body.

The side airbags in the rear passenger area* of your vehicle may already have been deactivated either at the time of manufacture or by a BMW Sports Activity Vehicle center. You may have them activated if you desire to do so. Please contact your BMW Sports Activity Vehicle center for additional information.◀

For information on the correct sitting posture, refer to page 44.

The airbags will not be triggered in the event of a minor accident, a vehicle roll-over, or collisions from the rear.◀

CarManuals2.com

Do not apply adhesive materials to the cover panels of the airbags, cover them or modify them in any other way. Do not attempt to remove the airbag restraint system from the vehicle. In the event of a malfunction, deactivation, or triggered actuation (as a response to an accident) of the airbag restraint system, consult your BMW Sports Activity Vehicle center for testing, repairs or service operations. Do not modify or tamper with either the wiring or the individual components in the airbag system. These include the padded steering wheel hub, the instrument cluster, the side trim panels of the front or rear doors and the roof pillars or the sides of the headliner. Do not remove or dismantle the steering wheel yourself. To ensure compliance with official safety regulations, entrust disposal of airbag generators to a BMW Sports Activity Vehicle center. Unprofessional attempts to service the system could lead to failure in an emergency or undesired airbag activation, either of which could result in personal injury. Do not touch the individual components directly after the system has been triggered, as otherwise there is a danger of burns.◀

At all times, occupants should sit upright and be properly restrained (infants and small children in appropriate child-restraint systems; larger children and adults using the safety belts).
Never let an occupant's head rest near or on a side airbag because the inflating airbag could cause a serious or fatal injury. Please note that the word "Airbag" imprinted on the door trim panel indicates the airbag's location.
Accident research shows that the safest place for children in an automobile is in the rear seat. However, a child sitting in the rear seat and not properly restrained may place his or her head on or near the airbag, if so equipped.
For example, a child – even though belted – may fall asleep with his or her head against the side airbag. It may be difficult for a driver to ensure that children in the rear seat will remain properly positioned at all times and do not place their heads on or near the side airbag. Therefore, we recommend that the rear side airbags, if provided, be deactivated if you plan to transport children in the rear seat.

The rear seat side airbags may already have been deactivated, either at the time of manufacture or by a BMW Sports Activity Vehicle center. Labels in the rear door opening should indicate the status of your rear seat side airbags. If you are uncertain of their status, or wish to have the airbags activated or deactivated, please contact your BMW Sports Activity Vehicle center.◀

Even when all these guidelines are observed, there is still a small residual risk of injuries to the face, hands and arms occurring from airbag deployment in isolated instances. The ignition and inflation noise may provoke a mild temporary hearing loss in extremely sensitive individuals.

Airbag warning information is also provided on both sun visors.

CarManuals2.com

This is the right way a child should sit in a child-restraint device when rear side airbags (arrow) are provided.

This is the right way a larger child should sit wearing the safety belt when rear side airbags (arrow) are provided.

Indicator lamp

The indicator lamp in the instrument cluster shows the operational status of the airbag system from ignition key position 1 and up.

System operational:

▷ The indicator lamp comes on briefly then goes out.

System malfunction:

▷ The indicator lamp fails to come on
▷ The indicator lamp comes on briefly before going out and then lighting up again.

If there is a system malfunction, have your BMW Sports Activity Vehicle center inspect the system immediately. If you do not, there is a risk that the airbags will not be triggered within their normal response range, even if the level of impact would normally have triggered them.

CarManuals2.com

Transporting children safely

Commercially-available child-restraint systems are designed to be secured with a lap belt or with the lap belt portion of a combination lap/shoulder belt. Improperly or inadequately installed restraint systems can increase the risk of injury to children. Always read and follow the instructions that come with the system.

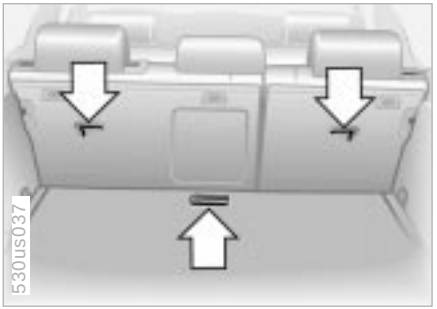

If you use a child-restraint system with a tether strap, three additional tether anchorage points (refer to the arrows in the illustration) have been provided. Depending on the location selected for seating in the rear passenger area, attach the tether strap to the corresponding anchorage point to secure the child-restraint system. Remove the cover first on the middle location.

CarManuals2.com

If the respective seating position is fitted with a head restraint lift the head restraint and pass the tether strap between the head restraint and the seat back.

Adjust the tether strap according to the child restraint manufacturer's instructions.

Before installing any child-restraint device or child seat, please read the following:
Never install a rear-facing child-restraint system in the front passenger seat of this vehicle.
Your vehicle is equipped with an airbag supplemental restraint system for the front passenger. Because the backrest on any rear-facing child-restraint system (of the kind designed for infants under 1 year and 20 lbs/9 kg) would be within the airbag's deployment range, you should never mount such a device in the front passenger seat, since the impact of the airbag against the child restraint's backrest could lead to serious or fatal injuries.
If it is necessary for a child (not an infant) to ride in the front seat, certain precautions should be taken. First, move the passenger seat as far away from the instrument panel as possible. This important precaution is intended to maximize the distance between the airbag and the child. Older children should be tightly secured with a safety belt.

Younger children should be secured in an appropriate forward-facing child-restraint system that has first been properly secured with a safety belt.
Never install a rear-facing child-restraint system in the front passenger seat.
We strongly urge you to carefully read and comply with the instructions for installation and use provided by the child restraint's manufacturer whenever you use such a device.
Be sure that all occupants (of all ages) remain properly and securely restrained at all times.◀

All rear seating positions in your vehicle meet the recommendations of SAE J1819, an industry-recommended practice for securing child-restraint systems in motor vehicles.

Child-restraint system security

All of the rear belt retractors and the front passenger's safety belt can be locked for mounting and securing child-restraint systems.

Information regarding this is located near the buckle latch of each safety belt.

To lock the belt

Pull the entire length of the belt from the belt retractor. Allow the reel to retract the belt somewhat and engage the buckle, then tighten the belt against the child-restraint system. The retraction mechanism is now locked.

To release the belt

Release the buckle, remove the child-restraint device and allow the belt retractor to reel the belt completely in.

CarManuals2.com

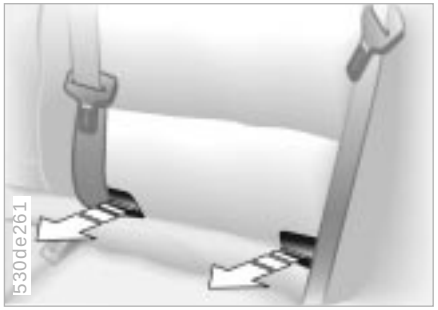

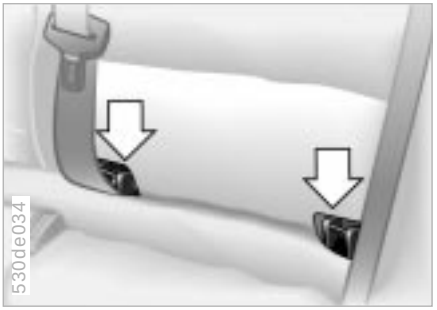

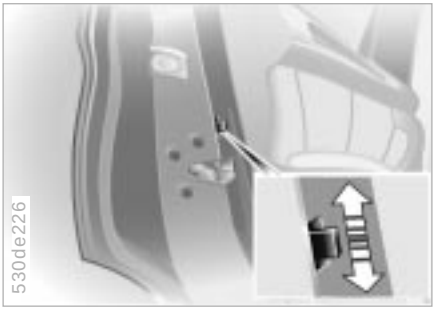

LATCH child-restraint system

Remove cover panel by pulling it off toward the front.
Simply put it back on to reattach it.

The illustration shows the mounts for a LATCH child-restraint system in the left rear seat.

To install a LATCH child-restraint system, please follow the manufacturer's operating instructions and safety precautions.

Child-safety locks

Slide the safety lever on the rear doors downward:

The door can now be opened from the outside only.

CarManuals2.com

How the system functions

You have probably frequently wished that you could configure individual functions of your vehicles to reflect your own personal requirements. In engineering your vehicle, BMW has included several user-defined functions in the vehicle's design. Your BMW Sports Activity Vehicle center can make these settings for you.

There are settings related to the vehicle ("Vehicle Memory") and settings related to individuals ("Key Memory"). You can configure up to four different basic positions for four different persons. The only requirement is that each person uses his or her own remote control key.

When your vehicle is unlocked with the remote control, the vehicle recognizes the individual user by means of a data exchange with the key, and makes adjustments accordingly.

In order for you to distinguish between different keys, colored decals are supplied together with the keys.

What the system can do

Your BMW Sports Activity Vehicle center can provide you with details on the capabilities of the "Vehicle Memory" and "Key Memory" systems. A few examples follow below:

Examples for Vehicle Memory:

CarManuals2.com

- ▷ Various signals that can serve as acknowledgment for locking and unlocking the vehicle
- ▷ Deactivating/activating the "Follow me home" lamps function.

Examples for Key Memory:

- ▷ Automatically moving the driver's seat, outside mirror and steering wheel into position for the respective person when unlocking the vehicle
- ▷ Calling up customized settings for the automatic climate control when unlocking the vehicle.

You will see this symbol throughout the Owner's Manual. It is to remind you at appropriate places of the settings that are available to you.◀

Ignition lock

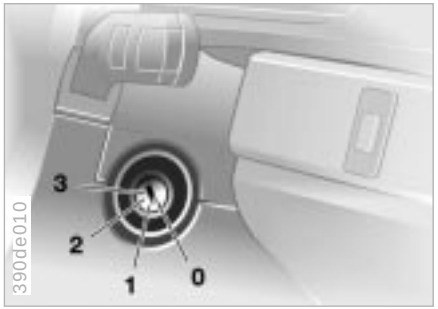

0 Steering lock engaged

1 Steering lock disengaged

2 Ignition on

3 Starting the engine

Steering lock engaged

The key can only be inserted and removed in this position.

After removing the key, turn the steering wheel slightly to the left or right until you hear the lock engage.

Once the ignition has been switched off (ignition key in position 0 or removed), the radio functions are still available for approx. 20 minutes. Turn the radio back on to use it.

An acoustic warning is sounded when you fail to remove the ignition key after opening the driver's door.

Vehicles with automatic transmission:
Do not move the selector lever from the "Park" position until the engine is running (ignition key in position 2).
In order to turn the key to position 0 or to remove it, first move the selector lever to the "Park" position (Interlock).◀

Steering lock disengaged

You will find that it is often easier to turn the ignition key from position 0 to position 1 when you move the steering wheel slightly to help disengage the lock.
Individual electrical devices are ready for operation.

Starting the engine

Vehicles with manual transmission: depress the clutch when starting the engine. If you do not, a lock prevents the engine from starting.◀

CarManuals2.com

Starting the engine

Before starting

▷ Engage the parking brake
▷ Be sure that the gearshift lever is in "Neutral" (or the selector lever in "Park" if the vehicle is equipped with an automatic transmission)
▷ Depress the clutch pedal.

Do not allow the engine to run in enclosed spaces. The exhaust gases contain carbon monoxide, an odorless and colorless, but highly toxic gas. Breathing the exhaust gases poses an extreme health risk, and can lead to unconsciousness and death.
Do not leave the vehicle unattended with the engine running. An unattended vehicle with a running engine represents a potential safety hazard.◀

Do not press the accelerator pedal while starting the engine.

BMW X5 3.0i:
Do not actuate the starter for too short a time. Do not turn it for more than approx. 20 seconds. Release the ignition key immediately as soon as the engine starts.
BMW X5 4.4i, 4.6is:
Your BMW is equipped with the convenience starting feature. Simply turn the key to position 3 (starter) and then release it immediately.
The starter actuation continues to operate automatically for a certain period of time and is stopped automatically as soon as the engine has started.
The automatic starting mode will not operate if the battery voltage is low.
The engine can be started by means of jump-starting, refer to page 164.◀

Do not allow the engine to warm up by leaving it running while the vehicle remains stationary. Instead, begin to drive immediately at a moderate engine speed.

CarManuals2.com

Should the engine fail to start on the first attempt (if it is very hot or cold, for instance):

▷ Press the accelerator pedal halfway down while engaging the starter.

Cold starts at very low temperatures, from approx. +5 °F (–15 °C) and at altitudes above 3,300 ft (1,000 meters):

▷ For the initial start attempt, allow the starter to remain engaged somewhat longer (approx. 10 seconds).

Engine idle speed is controlled by the engine computer system. Increased speeds at start-up are normal and should decrease as the engine warms up. If engine speed does not decrease, service is required.

To prevent the battery from discharging, always switch off electrical devices that are not in use. Switch the ignition off when the vehicle is not being driven.

Extended starting attempts, characterized by excessively frequent or long periods with the starter engaged, can lead to damage of the catalytic converter.◀

When driving, standing at idle, and parking the vehicle, take care to avoid contact between the hot exhaust system and flammable materials (grass, hay, leaves, etc.). Such contact could lead to a fire, resulting in serious personal injury and property damage.◀

Switching off the engine

Turn the ignition key to position 1 or 0.

Do not remove the ignition key while the vehicle is still moving. If you do so, the steering will lock.
Always remove the ignition key and engage the steering lock before leaving the vehicle.
Vehicles with manual transmission:
Always engage the parking brake when parking on slopes and inclined surfaces. Even placing the gearshift lever in 1st gear or reverse may not provide adequate resistance to rolling.
Vehicles with automatic transmission:
Place the selector lever in "Park".◀

Vehicles with automatic transmission:

The vehicle must be stationary and the selector lever in "Park" before you can remove the ignition key.

Parking brake

The parking brake is primarily designed to prevent the vehicle from rolling while parked. It operates against the rear wheels.

To engage

The lever engages automatically when you pull it up and the "PARK BRAKE" or "BRAKE" (in Canada "P") indicator lamp comes on in the instrument panel in ignition key position 2, refer to pages 18 and 19.

To release

Pull up slightly on the lever, press the button and lower the lever.

If, in exceptional circumstances, it should be necessary to engage the parking brake while the vehicle is in motion, do not pull it with excessive pressure. Keep your thumb pressed against the release button while carefully pulling up the lever to apply moderate pressure.
Excessive pressure can lead to overbraking and loss of traction (fishtailing) at the rear axle.
The brake lamps do not come on when the parking brake is engaged.
Vehicles with manual transmission:
Always engage the parking brake when parking on slopes and inclined surfaces. Even placing the gearshift lever in 1st gear or reverse may not provide adequate resistance to rolling.
Vehicles with automatic transmission:
Place the selector lever in "Park".◀

To avoid corrosion, apply the parking brake lightly from time to time when coasting to a standstill (at a traffic signal, for instance), provided that it is safe to do so.

CarManuals2.com

Press the clutch pedal all the way down each time you shift, pressing the gear-shift lever into its proper end position.

Depress the clutch when starting the vehicle, too, otherwise, lockout will prevent the engine from starting if the clutch is not depressed.

Reverse

Select "Reverse" only when the vehicle is completely stopped. Press the gear-shift lever to the left to overcome the resistance.

As you do this, the backup lamps will turn on automatically when the ignition key is in position 2.

Do not hold the vehicle in place on slopes by slipping or "riding" the clutch. Use the parking brake instead. A slipping clutch increases clutch wear.◀

CarManuals2.com

Automatic transmission with Steptronic*

You can drive as with a normal automatic transmission. In addition, you can also shift manually.

When you move the selector lever from the "D" position to the left into the M/S range, the performance-oriented shift programs of the automatic transmission are engaged. As soon as you tap the selector lever in the "+" or "–" direction, Steptronic changes the gear. The manual mode is engaged. When you wish to use the automatic transmission mode again, move the selector lever to the right into the "D" position.

Selector lever positions

P R N D M/S

The transmission range display varies according to the equipment of your vehicle (refer to the illustrations).

Starting the engine

The engine can only be started in selector lever positions P ("Park") or N ("Neutral").

Range selection

A detent prevents inadvertent shifts to the "Reverse" or "Park" selector lever positions. To disengage the detent, press the button on the front side of the selector lever knob (arrow).

▷ While the vehicle is stationary and before shifting out of "Park" or "Neutral", depress the footbrake in order to disengage the selector lever's lock mechanism (Shiftlock).
Hold the footbrake down until starting off. The vehicle will otherwise "creep" when a drive position is engaged.◀

CarManuals2.com

If you leave the vehicle with the engine running, move the selector lever to the "Park" or "Neutral" position and apply the parking brake. If you fail to do this, the vehicle could move.
Do not leave the vehicle unattended with the engine running. An unattended vehicle with a running engine represents a potential safety hazard.◀

P – Park

Select only when the vehicle is stationary. The transmission locks to prevent the rear wheels from turning.

R – Reverse

Select only when the vehicle is stationary.

N – Neutral

Select only if your journey is interrupted for a longer period.

D – Drive (automatic shift program)

This position is designed for driving under all normal operating conditions. All forward gears are available.

Kickdown

In the kickdown mode, you achieve maximum acceleration and in position D top speed.
Depress the accelerator pedal past the increased resistance point at the full-throttle position.

CarManuals2.com

M/S Manual mode and Sport Program

When you change from D to M/S, the Sport Program is activated. This is indicated by "D S" in the transmission range display. The Sport Program is designed for performance-oriented driving.

With the first brief touch, the automatic transmission shifts from the Sport Program to the manual mode.
Whenever you tap the selector lever in the "+" direction, the transmission shifts up, and when you tap it in the "–" direction, the transmission will shift down.
Depending on the equipment version, 1 to 5 or M1 to M5 is indicated in the transmission range display.

Upshifts or downshifts will only be carried out at appropriate engine speeds and road speeds. If the engine speed is too high, for instance, the downshift will not be executed. The gear selected will appear briefly in the instrument cluster followed by the current gear.

If you are driving in the manual mode and wish to accelerate rapidly – to pass another vehicle, for example – shift down manually or with the kickdown function.◀

You can only change from M/S to selector lever positions "P", "R" and "N" via the "D" position.

Electronic transmission control module

If the indicator lamp comes on or the message "TRANS.FAIL-SAFE PROG" appears in the Check Control*, there is a fault in the transmission system.

Bring the vehicle to a stop. Move the transmission selector lever to "P". Set the parking brake and switch the engine off (ignition key to position 0).

Wait a few seconds, then start the engine.
If the indicator lamp goes out after a few seconds, normal transmission performance has been restored. You may continue to drive as usual. If the indicator lamp does not go out, you can place the selector lever in all positions. However, the vehicle will now only drive forward with limited gear selection.

If this happens, avoid extreme engine loads and consult the nearest BMW Sports Activity Vehicle center.

Do not work in the engine compartment when a drive gear (forward or reverse) is engaged. If you do this, the vehicle could move.◀

CarManuals2.com

Indicator/Headlamp flasher

Information on jump-starting, tow-starting and towing begins on page 164.

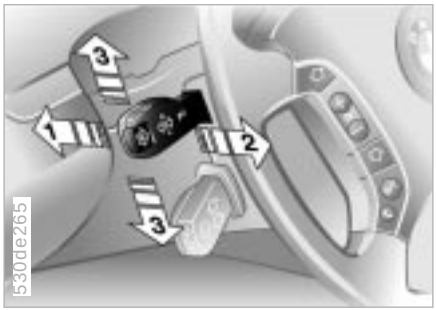

1 High beams (blue indicator)

2 Headlamp flasher (blue indicator)

3 Turn signal indicators (green indicator accompanied by periodic clicking sound from the relay)

To signal briefly

Press the lever up to but not beyond the pressure point. It then returns to the center position when released.

▷ If the indicator lamp and the clicking from the relay are both faster than normal, one of the turn signal indicators has failed.◀

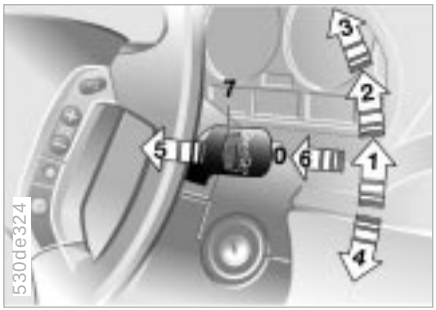

0 Wipers retracted

1 Intermittent mode or rain sensor*

2 Normal wipe

3 Fast wipe

4 Brief wipe

5 Clean the windshield

6 Special wash program*

7 Rotary dial for control of the wipe interval or the sensitivity of the rain sensor*

CarManuals2.com

Wipers retracted (home position)

The left wiper is partially concealed by the hood. In order to bring the wipers to roughly a vertical position (this is important for changing the wiper blades or to fold the wipers out during frosty weather, for example):

▷ With the lever in position 1, switch off the ignition as soon as the wipers come to a stop.

If equipped with a rain sensor*:

1. Switch on the wipers with the lever in position 1, 2 or 4
2. When the wipers are approx. vertical, switch the ignition off.

For changing the wiper blades, refer to page 152.

⚠ Fold the wipers back down onto the windshield before you turn the ignition key to position 1 or 2 again. If you do not, they could be damaged.◀

Intermittent mode or rain sensor*

Intermittent mode:

You can set the wipe interval to four stages with rotary dial 7.
In addition, the wipe interval is varied automatically depending on road speed.

Rain sensor:

The rain sensor is positioned on the windshield, directly in front of the interior rearview mirror.

To activate the rain sensor:
Move the lever to position 1 with the ignition key in position 1 or higher. The wipers travel once across the windshield, regardless of the weather conditions.

You can leave the lever permanently in position 1. It is then only necessary to activate the rain sensor from ignition key position 1 and up. To do this, turn rotary dial 7 briefly.

To adjust the sensitivity of the rain sensor:
Turn rotary dial 7.

Deactivating the rain sensor:
Move lever to position 0.

Switch the rain sensor off in automatic car washes. If you do not, damage may occur if the wipers switch on unintentionally.◀

Normal wipe

The system switches automatically to intermittent mode when the vehicle is not moving (not on vehicles with rain sensor*).

Fast wipe

The wipers operate at normal speed when the vehicle is not moving (not on vehicles with rain sensor*).

CarManuals2.com

Clean the windshield

The system sprays washer fluid against the windshield and activates the wipers for a brief period.

Special wash program*

As at 5; there are also several additional wash cycles, and the headlamps are cleaned*.
This program is recommended after you have driven on extremely dirty roads.

Clean the headlamps*

▷ With the special wash program 6
▷ With every fifth actuation of clean the windshield 5 when the vehicle's lighting is switched on.

Do not use the washers if there is any danger that the fluid will freeze on the windshield. If you do so, your vision could be obscured. For this reason, use an antifreeze agent, refer to page 143.
Do not use the washers when the reservoir is empty. This could cause damage to the washer pump.◀

Windshield washer jets

The windshield washer jets are warmed automatically when the ignition key is in position 2.

Rear window wiper

0 Retracted (home) position of the rear window wiper

1 Rear window wiper in intermittent mode. When reverse gear is engaged, continuous operation is switched on automatically

2 Clean the rear window

You can also program the interval:

▷ Switch briefly from position 0 to position 1

▷ The time until reactivation (from position 0 to 1) is the programmed interval (max. 30 seconds).

Cruise control*

Programming is deleted:

▷ Approx. 10 seconds after the lever is placed in position 0 or

▷ after the engine is switched off.

For changing the wiper blade, refer to page 152.

You can automatically maintain and store any desired vehicle speed above approx. 20 mph (30 km/h).

You can use cruise control whenever the system is active while the engine is running.

CarManuals2.com

Cruise control*

To activate the system

From ignition key position 2:
Press button; the indicator lamp in the instrument cluster (refer to page 21) comes on. You can now use the cruise control.

Do not use cruise control on twisting roads, when high traffic density prevents driving at a constant speed, when the road surface is slick (snow, rain, ice), or when the road surface is loose (rocks or gravel, sand).◀

To deactivate the system

Press the button repeatedly until the indicator lamp in the instrument cluster goes out.

The cruise control is also deactivated when the ignition key is turned into position 0.

The speed stored in the memory is deleted.

To maintain and store speed or to accelerate

Press button (+) briefly:
The system maintains and stores the current vehicle speed. Every time you briefly touch the button, the speed increases by approx. 0.6 mph (1 km/h).

Press and hold button (+):
The vehicle accelerates without pressure on the accelerator pedal. When you release the button, the system maintains and stores the current speed.

If, on a downhill gradient, the engine's braking effect is not sufficient, the controlled speed can be exceeded. Speed can drop on uphill grades if the engine output is insufficient.◀

To decelerate

Press button (–) briefly:
When cruise control is active, every brief touch of the button reduces the speed by approx. 0.6 mph (1 km/h).

Press and hold button (–):
With the cruise control active, the system automatically reduces the throttle opening to slow the vehicle. When you release the button, the system maintains and stores the current speed.

CarManuals2.com

To interrupt the cruise control

CarManuals2.com

When the system is activated, press button 1. The indicator lamp stays on. You can use the cruise control again whenever required by calling up the speed that was stored last.

In addition, the system is automatically deactivated in response to the following conditions:

- ▷ When you apply pressure to the brake pedal
- ▷ When you apply pressure to the clutch pedal or when you move the automatic transmission selector lever from "Drive" to "Neutral"
- ▷ If you exceed or fall below the controlled speed for an extended period (by depressing the accelerator, for example).

To recall the stored setting

Press button:
The vehicle accelerates to and maintains the last speed stored.

Odometer, outside temperature display

1 Odometer

2 Trip odometer

3 Outside temperature display

Odometer

You can activate the displays shown in the illustration with the ignition key in position 0 by pressing the button in the instrument cluster (arrow).

The range of available displays varies according to your individual vehicle's equipment.

Trip odometer

To reset the trip odometer to zero, press the button (arrow) with the ignition key in position 1 or 2.

Outside temperature display

The outside temperature appears in the display from ignition key position 1 and higher.

You can change the units of measurement (°C/°F) by

1. pressing and holding down the button (arrow) with the ignition key in position 1
2. and then turning the ignition key to 0.

Refer also to page 80.

Ice warning

If the outside temperature drops to approx. +37.5 °F (+3 °C), a signal sounds as a warning and the display flashes for a brief period.

The ice warning does not alter the fact that surface ice can form at temperatures above +37.5 °F (+3 °C), on bridges or shaded road surfaces, for instance.◀

CarManuals2.com

Tachometer

Do not operate the engine with the needle in the red overspeed zone of the gauge.

To protect the engine, the engine management system automatically interrupts the fuel supply in this range.

Energy control

Indicates the current fuel consumption in mpg (in liters/100 km on Canadian vehicles). This allows you to see whether your current driving style is conducive to fuel economy with minimum exhaust emissions.

When the vehicle is stationary, the display goes to "Maximum" (zero on Canadian models).

Fuel gauge

If the indicator lamp comes on and stays on, there are approx.

▷ 2.0 gal. (8 liter) – 6-cylinder engine
▷ 2.5 gal. (10 liter) – 8-cylinder engine

of fuel still in the tank.

Tank capacity: refer to page 173.

Certain operating conditions (such as those encountered in mountainous areas) may cause the needle to fluctuate slightly.

⚠ Please refuel early, as driving to the last drop of fuel can result in damage to the engine and/or catalytic converter.◀

When you switch on the ignition, the indicator lamp comes on briefly to confirm that the system is operational.

CarManuals2.com

Coolant temperature gauge

Blue

The engine is still cold. Drive at moderate engine and vehicle speeds.

Red

When you switch on the ignition, the warning lamp comes on briefly to confirm that the system is operational.

If the warning lamp comes on while driving or the message "COOLANT TEMPERATURE" appears in the Check Control*: the engine is overheated. Switch off the engine immediately and allow it to cool down.

Checking coolant level: refer to page 145.

Between the blue and red zones

Normal operating range. It is not unusual for the needle to rise as far as the edge of the red zone.

CarManuals2.com

Service Interval Display

The range of available displays varies according to your individual vehicle's equipment.

Green lamps

The number of illuminated lamps decreases as the time for your next maintenance visit approaches.

Yellow lamp

This field appears together with OILSERVICE or INSPECTION.

Maintenance is due. Please contact your BMW Sports Activity Vehicle center for an appointment.

Red lamp

The maintenance deadline has been passed.

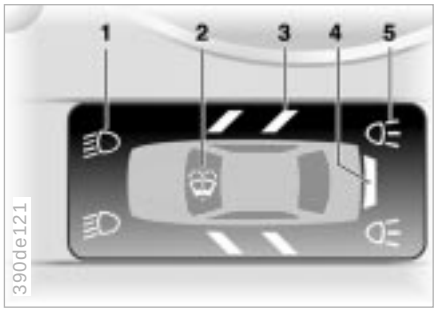

Graphic display*

The following alerts or status messages are displayed with icons from ignition key position 2 and up until the defects are corrected:

1 Check low beams

2 Add washer fluid (goes out after approx. 1 minute)

3 Door open

4 Tailgate open

5 Check brake and tail lamps.
A defective center brake lamp is indicated by the upper symbol.

When you open the door after stopping, a warning signal sounds without a visual indicator for:

▷ LIGHTS ON and
▷ KEY IN IGNITION LOCK.

Alphanumeric display*

Text messages are used to alert the driver to system malfunctions when the ignition key is turned to position 2. The alert is accompanied by a gong.

CarManuals2.com

1 Status messages symbol

2 Display

3 CHECK button

Messages concerning system faults are differentiated based on two priorities:

Priority 1

These defects are immediately indicated by a gong and a flashing warning symbol 1. Simultaneous defects will be displayed consecutively. These status messages remain in the display until the defects are corrected. They cannot be deleted by pressing the CHECK button 3:

▷ RELEASE PARKINGBRAKE
▷ COOLANT TEMPERATURE
The coolant is overheated. Stop the vehicle immediately and switch off the engine, refer to pages 76 and 145
▷ STOP!ENGINE OILPRESS
The oil pressure is too low. Stop the vehicle immediately and switch off the engine, refer to pages 18 and 143

▷ CHECK BRAKE FLUID
Indicates that brake fluid is down to approximately the minimum level. Top off the brake fluid at the next opportunity, refer to page 146. Have the cause of the brake fluid loss diagnosed and corrected by your BMW Sports Activity Vehicle center

▷ TIRE DEFECTIVE*
Reduce vehicle speed immediately and stop the vehicle. Avoid hard brake applications. Do not oversteer, refer to page 99

▷ SELFLEVEL SUSP.INACT*
Please consult the nearest BMW Sports Activity Vehicle center

▷ SELFLEVEL SUSP.INACT*
"max. 35 mph/max. 60 km/h*"
These displays appear consecutively. Do not exceed a maximum speed of 35 mph (60 km/h).
Please consult the nearest BMW Sports Activity Vehicle center

▷ SPEED LIMIT*
You will see this message if the programmed speed limit has been exceeded, refer to page 86.

Priority 2

These displays appear for 20 seconds when the ignition key is turned to position 2. The warning symbols remain after the message disappears. You can call up the messages again for display by pressing the CHECK button.

▷ TRUNKLID OPEN
This message appears only at the start of a trip

▷ DOOR OPEN
This message appears after a minimal defined road speed has been exceeded

▷ FASTEN SEAT BELTS*
In addition to this message, an indicator lamp with the safety belt icon appears and an acoustical signal is sounded

▷ WASHER FLUID LOW
The fluid level is too low; top off at the next opportunity, refer to page 143

▷ CHECK ENGINE OIL LEV
The oil level is at the absolute minimum; refill as soon as possible, refer to page 143. Do not drive more than approx. 30 miles (50 km) until you add oil

▷ CHECK FILLER CAP
Check to see whether the fuel filler cap has been closed properly, refer to page 24. A fuel filler cap that has not been closed all the way will set off the Service Engine Soon lamp

▷ OUTSIDE TEMP. +23 °F (–5 °C)
This display is only an example. The current temperature is displayed at outside temperatures of +37.5 °F (+3 °C) and below, refer also to page 74

▷ SET TIRE PRESSURE*
The RDC has imported the current inflation pressure in the tires as the target values which the system will monitor, refer to page 98

▷ CHECK TIRE PRESSURE*
Check and correct the tire inflation pressure to specifications at the earliest opportunity (next stop to refuel), refer to page 99

▷ TIRECONTROL INACTIVE*
A temporary interference of the RDC or a system fault, refer to page 99

▷ CHECK BRAKE LIGHTS
A lamp has failed or the electrical circuit has a fault, refer to pages 155 and 156 or consult a BMW Sports Activity Vehicle center.

CarManuals2.com

▷ CHECK LOWBEAM LIGHTS
CHECK SIDE LIGHTS
CHECK REAR LIGHTS
CHECK FRONT FOGLAMPS
CHECK LICPLATE LIGHT
CHECK HIGHBEAM LIGHT
CHECK BACK UP LIGHTS
Defective bulb or circuit, refer to page 153 or consult a BMW Sports Activity Vehicle center

▷ TRANS. FAILSAFE PROG
Please consult the nearest BMW Sports Activity Vehicle center, refer to page 68

▷ CHECK BRAKE LININGS
Have the brake pads inspected by your BMW Sports Activity Vehicle center, refer to page 135

▷ CHECK COOLANT LEVEL
Coolant too low, top off at the next opportunity, refer to page 145

▷ ENGINE FAILSAFE PROG
There is a fault in the engine's electronic control system.
You can continue to drive with reduced engine output or engine speed. Have the system checked by your BMW Sports Activity Vehicle center.

CarManuals2.com

Displays after completion of trip

All of the malfunctions registered during the trip appear consecutively when the ignition key is turned to position 0.

The following displays will appear when appropriate:

▷ LIGHTS ON

▷ KEY IN IGNITION LOCK

▷ CHECK ENGINE OIL LEV
Add engine oil at the next opportunity (next stop to refuel), refer to page 143.

This display appears when you open the driver's door after parking the vehicle. A supplementary gong is also heard.

Status messages remain available for a period of approx. three minutes after the display goes out and the key is removed from the ignition lock. Press the CHECK button 3. If there were multiple messages, press the CHECK button repeatedly to view them all in sequence.

To check the Check Control

Press the CHECK button 3 with the ignition key in position 2:
CHECK CONTROL OK appears in the display.

No malfunctions are present in the monitored systems.

Computer

You can find a description of the computer on pages 80 and 86 as well as in the Owner's Manual for the Onboard Computer.

You can have the Check Control and computer messages displayed in a different language.◀

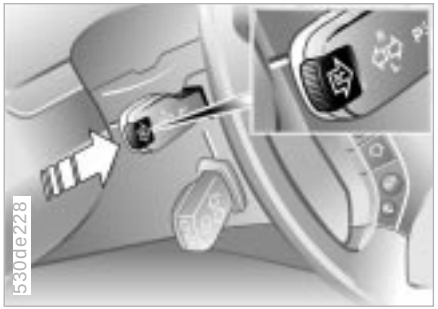

Mode selection

From ignition key position 1 and up, you can call up information from the computer using the button in the turn signal lever. By pressing the button briefly in the direction of the steering column, you can call up a new function for display.

The displays appear in the following order: outside temperature, average fuel consumption, cruising range, average speed.

Starting with ignition key position 1, the last active setting is displayed.

The range of available displays varies according to your individual vehicle's equipment.

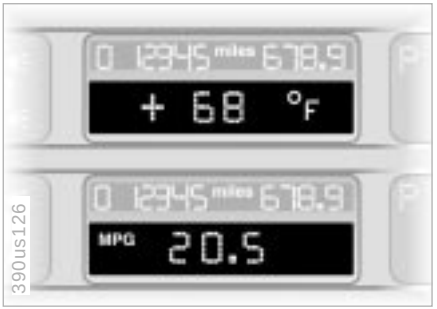

Outside temperature and average fuel consumption

You can change the units of measurement (°C/°F) for the outside temperature display by

CarManuals2.com

1. pressing and holding the trip odometer reset button (in ignition key position 1)
2. and then turning the ignition key to 0.

Refer also to page 74.

Cruising range and average speed

The computer bases its calculations of the cruising range on the previous driving style and conditions.

The computer ignores any time spent with the vehicle stationary and the engine switched off in its average speed calculations.

To cancel the display

If the button in the turn signal lever is pressed briefly while the average speed is displayed, the computer display can be masked out.

To restart calculations

If you continue to press the button in the turn signal lever, the average values which were just displayed for fuel consumption and speed will be recalculated from that point. The engine must be running for this calculation.

Computer with alphanumeric display*

If your vehicle has Check Control with alphanumeric display, the system's computer is described beginning on page 86 and in the Owner's Manual for the Onboard Computer.

CarManuals2.com

Central display

The MID serves as the central display and operation for the following onboard systems:

▷ Digital clock (e.g. time display, date)
▷ Audio systems (radio, cassette, CD)
▷ Computer* (e.g. fuel consumption, cruising range)
▷ Cellular phone (e.g. dialing).

You will find explanations and notes for operating the digital clock and the computer on the following pages. Please refer to the separate Owner's Manuals for operating the audio systems, the cellular phone and the onboard computer.

▷ Any unrealistic numerical entries will not be accepted.
All stored data will be lost if the power supply is interrupted. Time display, switch-on times for independent heating and ventilation, distance and cruise control speed limit may have to be reset once the power supply has been re-established.◀

1 Function button for audio systems
2 Function button for the cellular phone*
3 Indicator lamp for independent ventilation*
  ▷ remains on if switch-on time is active
  ▷ flashes while operating
4 Function button for the digital clock and computer*
5 Indicator display for the various onboard systems
6 Display for the entry and query buttons. Depending on the operating mode, the functions and alternatives that can be selected at the buttons are displayed here
7 Entry and query buttons for operating the various onboard systems

CarManuals2.com

Digital clock in the MID

Only make entries when the vehicle is stationary – to avoid endangering yourself or other road users.◀

To call up time or date

Press the left side of the button.

Display shows:

You can have the time displayed in 12 or 24 hours.

To change the display:

Press the left side of the button.

If the 12-hour time display is in use, AM or PM appears after the time.

To change the time

Press the left side of the button.

Press the right side of the button: The dots flash in the display.

To alter the setting:

Press on the left or right, or hold the button down.

To store the entry:

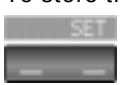

Press the right side of the button.

To change the date

Press the left side of the button.

Press.

Press the right side of the button: The dots and the DATE display flash.

To alter the setting:

Press on left or right, or hold the button down.

To store the entry:

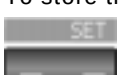

Press the right side of the button.

The clock takes leap years into account and therefore does not have to be reset manually.

CarManuals2.com

Reminder signal

You can program a reminder signal (Memo) to be heard every hour, so that you are sure not to miss a news broadcast.

Press the left side of the button.

Press.
MEMO OFF appears in the display for entry and query buttons, and the tone symbol will appear in the upper right of the display.

A signal is then heard 15 seconds before each hour.

Stopwatch

CarManuals2.com

Press the left side of the button.

Press.

Display shows:

To start the stopwatch function:

Press the right side of the button.

To take an intermediate time reading:

Press.

Press.
The stopwatch display can be seen counting up; the stopwatch continues to run.

To halt the stopwatch:

Press the right side of the button.

▷ The stopwatch is halted when the ignition switch is turned back to 0, but starts to run again when the ignition key is turned to 1.◀

Enter the switch-on times for the independent ventilation*

You can enter two different switch-on times.
The ventilation will shut off automatically after 30 minutes.

Please follow the instructions for operating the independent ventilation that start on page 112.◀

Press the left side of the button.

Press on the left/right.

Display shows:

Press the right side of the button:
Display flashes, e.g. TIMER 1.

To enter the time:

Press on the left/right, or hold the button down.

To confirm the entry:

Press the right side of the button.

The activated time is marked with an asterisk.

The switch-on times remain stored until new entries are made.

You can change switch-on times that have already been stored by making a new time entry as described above.

When the switch-on time is active, the LED comes on in the MID. During actual operation of the ventilation, the LED flashes. The LED goes out when the system is switched off.

To activate/deactivate the time:

Press twice.

Directly switching the independent ventilation* on and off

The independent ventilation function can only be called up in ignition key position 1.◀

Press the left side of the button.

Press.

CarManuals2.com

Only make entries when the vehicle is stationary – to avoid endangering yourself or other road users.◀

Computer calculations begin at the start of the journey.
Information can also be called up in the display by remote control, refer to page 90.

Speed limit

Speed limit entry:

CarManuals2.com

You can enter the road speed here at which you wish to hear and see a reminder signal: a signal will sound, the word LIMIT will flash, and with the Check Control with alphanumeric display*, the speed limit warning stored in the memory will appear on the instrument cluster briefly.

The speed limit reminder is only repeated if road speed has fallen at least 3 mph (approx. 5 km/h) below the preset speed limit.

Press the right side of the button.

Press.

Press the right side of the button.

Display shows:

Enter the limit by pressing the function buttons.

To correct an entry:

Press the left side of the button and repeat the entry.

To store the entry:

Press the right side of the button.

Adopting the current speed as the speed limit:

Press the right side of the button.

Press.

Press twice at right.

Deactivating the speed limit:

Press the right side of the button.

Press.

The LIMIT display goes out, but the stored value is not lost and can be reactivated by pressing the LIMIT button.

Distance to destination

The remaining distance to the destination will be displayed on the screen. Enter the entire distance before starting the journey.

Enter:

Press the right side of the button.

Press the left side of the button.

CarManuals2.com

Press the right side of the button.

Display shows:

You can enter the distance by pressing the function buttons.

To correct an entry:

Press the left side of the button and repeat the entry.

To store the entry:

Press the right side of the button.

Checking stored value:

Press the right side of the button.

Press the left side of the button.

Estimated time of arrival

When you have entered the distance to your destination, you can obtain an estimated time of arrival display which is continuously updated by the computer as your average driving period varies.

Press the right side of the button.

Press the right side of the button:
The estimated time of arrival is displayed.

Cruising range

The distance which the vehicle should cover on the remaining fuel in the tank is displayed.

Press the right side of the button.

Press.
The display shows the probable range.

When you have only enough fuel left to drive fewer than 30 miles (50 km), then refuel, as otherwise the engine or the catalytic converter could be damaged.◀

The computer will only register fuel amounts over 1.8 gal (6 liters).

Fuel consumption

You can have the average fuel consumption displayed for two different distances, for example a complete journey and part of the journey.

To start the calculation, select the CONS function with the engine running.

Press the right side of the button.

Press on the left or right:
The display will show the average fuel consumption.

To restart the fuel consumption calculation:

Press on the left or right.

Press the right side of the button.

CarManuals2.com

Speed

You can call up a display of the vehicle's average speed.

To start the calculation, select the SPEED function with the engine running.

Press the right side of the button.

Press.
The display shows the average speed.

To recalculate the speed:

Press the right side of the button.

Extended immobilizer function

You can establish a code that will prevent the engine from being started unless the code is entered.

If you do not have access to the code, the emergency deactivation procedure will have to be carried out, refer to next page.

Establishing and activating the code:

Press the right side of the button.

Press the left side of the button.

Display shows:

Enter the code with the function buttons.

To correct an entry:

Press on the left side of the button and repeat the entry.

To store the entry:

Press the right side of the button.
Turn the ignition key to position 0.

Deactivate the code:

When you are asked to enter the code (ignition key in position 1 or 2):

▷ Enter the code at the function buttons.

Press the right side of the button.

After the code has been entered correctly and confirmed with the SET button, the time display appears.

CarManuals2.com

After three incorrect code entries, or three attempts to start the engine without a code entry, the alarm will sound for 30 seconds on vehicles fitted with an alarm system.

Deactivating the alarm in an emergency:

If you have forgotten the code, proceed as follows:

1. Disconnect the battery, wait approx. 2 minutes, then reconnect it. Note that on vehicles with an alarm system, the alarm will sound
2. Set the ignition key to position 1: The time display will count down for the next ten minutes
3. After ten minutes, start the engine.

▷ If the code becomes available again in the meantime, it can be entered during the waiting period after pressing the CODE button.◀

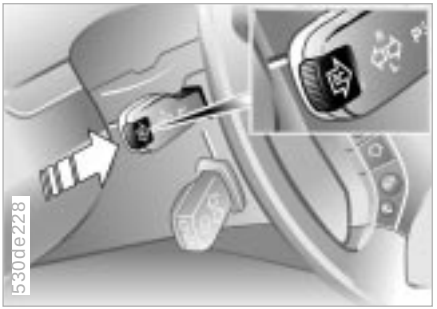

Remote control

The button on the turn signal indicator lever can be used to select the items of computer information which are to be displayed.

CarManuals2.com

To do this, press:

▷ the button on the lever until PROG 1 shows on the display
▷ the MID buttons in the order in which you wish the information to be displayed.
Each time an entry is stored, the program number appears on the display.

To terminate the selection procedure:

Press the right side of the button.

To have all the available information displayed, press:

▷ the button on the lever until the display shows PROG
▷ the SET button.

To obtain individual items of information, press the button in briefly as often as necessary.

The concept

The PDC assists you when you are parking. Acoustical signals inform you of the distance to an obstacle. To do this, four ultrasonic sensors in the front and rear bumpers each measure the distance to the nearest object. The detection range of the front sensors and the two sensors located at the ends of the rear bumper is approximately 2 ft (60 cm), while the rear center sensors can detect objects to a distance of roughly 5 ft (1.50 m).

Automatic function

The system starts to operate automatically about one second after you select reverse with the ignition key in position 2.

Manual activation

Press the button; the indicator lamp comes on.

After driving a distance of more than approx. 160 ft (50 m) or exceeding a speed of approx. 20 mph (30 km/h), the system switches off and the indicator lamp goes out. Switch the system on again as required.

Manual deactivation

Press the button again.

Acoustical signals

The distance from an obstacle is indicated in front with a higher intermittent tone, and at the rear with a lower intermittent tone. As the distance between vehicle and object decreases, the intervals between the tones become shorter.
A continuous tone indicates the presence of an object less than approx. 1 ft (30 cm) away.

The warning signal is canceled after approx. 3 seconds if you are moving parallel to a wall.

If there is a malfunction of the system: The indicator lamp flashes and a short steady signal tone is sounded

- ▷ if you activate PDC with the button
- ▷ when you select reverse for the first time after switching on the ignition
- ▷ if a malfunction occurs while the PDC system is active.

Switch the system off and have the cause of the malfunction corrected by your BMW Sports Activity Vehicle center.

CarManuals2.com

The PDC system does not remove the driver's personal responsibility for evaluating the distance between the vehicle and any obstacles. Even when sensors are involved, there is a blind spot in which objects cannot be detected. This applies especially in those cases where the system approaches the physical constraints of ultrasonic measurement, as occurs with tow bars and trailer couplings, and in the vicinity of thin or wedge-shaped objects.
Certain sources of sound, such as a loud radio, could drown out the PDC signal tone.◀

Keep the sensors clean and free of ice or snow in order to ensure that they continue to operate effectively. Do not apply high pressure spray to the sensors for a prolonged period of time. Maintain an adequate distance of more than 4 in (10 cm).◀

Dynamic Stability Control (DSC)

The concept

Carmanuals2.com

DSC maintains vehicle stability, even in critical driving situations.

The system optimizes vehicle stability during acceleration and when starting from a full stop, as well as optimizing traction. In addition, it recognizes unstable vehicle conditions, such as understeering or oversteering, and, as far as is possible within the laws of physics, keeps the vehicle on a steady course by adapting the rpms and brake applications to the individual wheels.

The system starts up automatically each time you start the engine.

Indicator lamp

The indicator lamp in the instrument cluster goes out shortly after you switch on the ignition, refer to page 20.

Indicator lamp flashes:
The system is active and governs drive and braking force.

If the indicator lamp fails to go out after the engine is started, or comes on during normal driving and stays on:
The system is either defective or was switched off with the button: the stabilizing applications described to the left are no longer available. The vehicle will remain completely operational, however, without DSC.

Consult your BMW Sports Activity Vehicle center to have the system repaired.

To switch the system off

Press the button; the indicator lamp comes on and stays on.

Traction intervention remains active; that is, braking intervention will continue.

In the following exceptional circumstances, it may be effective to switch off the DSC for a short period:

- When rocking the vehicle or starting off in deep snow or on loose surfaces
- On sandy road surfaces
- On poor surfaces with deep ruts
- If the wheels "churn" on muddy surfaces
- When driving with snow chains.

As a result of the traction intervention, the brakes may be subjected to additional loads when the system is switched off. For this reason, it is possible that the braking intervention will be disabled automatically for a brief period in order to limit brake temperature.
To maintain vehicle stability, always drive with the system switched on when possible.◀

CarManuals2.com

To switch the system on again

Press the button again; the indicator lamp goes out.

The laws of physics cannot be repealed, even with DSC. An appropriate driving style always remains the responsibility of the driver. We therefore urge you to avoid using the additional safety margin of the system as an excuse for taking risks. Do not make any modifications to the DSC system. Service procedures on the system are to be performed by authorized technicians only.◀

Dynamic Brake Control (DBC)

DBC is an integral component of the DSC system.

The system responds to sudden, high-intensity applications of force to the brake pedal by automatically braking the vehicle with maximum boost to achieve the shortest-possible braking distances during "panic stops." This system exploits all the benefits of ABS.

Do not reduce the pressure exerted against the brake pedal until the braking maneuver has been completed. DBC is deactivated when you release the brake pedal.

Hill Descent Control (HDC)

The concept

HDC is a system for driving downhill in steep terrain. This system reduces vehicle speed on steep downhill gradients, thus allowing you to maintain control of your BMW under these conditions.
The vehicle moves at slightly more than walking speed without active intervention from the driver.

HDC is available for activation at vehicle speeds below approx. 20 mph (35 km/h). When driving down steep hills with a speed below approx. 20 mph (35 km/h), the vehicle reduces speed automatically down to slightly more than walking speed (approx. 5 mph/8 km/h) and then maintains this speed at a constant.

You can use the accelerator or brakes to vary this automatically controlled speed within a range extending from approx. 3 mph (5 km/h) to 15 mph (25 km/h).
You can use the +/– button to set the cruise control to a target speed in the range from approx. 3 mph (5 km/h) to 15 mph (25 km/h).

HDC is automatically deactivated once vehicle speed again exceeds approx. 35 mph (60 km/h).

To switch the system on

Press the button. The indicator lamp comes on.

The indicator lamp flashes when the brakes are applied automatically.

To switch the system off

Press the button again; the indicator lamp goes out.

HDC is deactivated automatically above a road speed of approx. 35 mph (60 km/h) and when the ignition is switched off.

To use HDC

With manual transmission:
Use HDC in first gear and in Reverse since the engine's braking effect is diminished in the higher gears.

With automatic transmission:
You can use HDC in every drive position.

In the event of a fault

The indicator lamp goes out in the HDC mode or does not come on when HDC is switched on:
HDC is temporarily not available if brake temperature is too high.

If the DSC indicator lamp also lights up:
There is a fault in the HDC and DSC systems. Have your BMW Sports Activity Vehicle center inspect this system as soon as possible.

Online Edition for Part No. 01 41 0 156 416 - © 10/01 BMW AG

Variable Ride Height*

The warning lamp for the Variable Ride Height comes on, or the message "SELFLEVEL SUSP.INACT" appears in the Check Control: there is a malfunction in the Variable Ride Height.

Stop and inspect the vehicle. If it is riding significantly lower in the rear than in the front, or if it is sitting at an incline (left rear compared to right rear), consult the nearest BMW Sports Activity Vehicle center. Drive with appropriate caution in the meantime. The vehicle has reduced ground clearance or driving comfort is noticeably reduced.

Even if the attitude of the vehicle is normal, you should consult the nearest BMW Sports Activity Vehicle center if the warning lamp indicates a system malfunction.

Variable Ride Height on both axles*

The concept

Your vehicle is equipped with Variable Ride Height acting on both the front and rear suspension. This system combines automatic self-leveling, which compensates for variations in front-to-rear load-distribution patterns, with a selection feature allowing drivers to choose from among several ride-height options.

You may choose from among the following ride heights:

▷ Standard
The "standard" setting is intended for most operating conditions, including trailer towing

▷ Off-Road
Higher ride height for increased ground clearance

▷ Access
Lowers vehicle for more convenient cargo handling and easier passenger ingress and exits

Changes in ride height are initiated either manually, using the control button (refer to page 96), or automatically in response to specific speeds. When the ride height is selected manually, the driver has the additional option of revising the ride-height selection by entering a new command during the adjustment process.
When the vehicle is stationary, the system executes ride-height changes in both directions (up and down) whenever the doors are closed. The tailgate/liftgate may be open. The system raises the vehicle only when the engine is running.

The system's automatic self-leveling feature automatically compensates for variations in the vehicle's load.

Frequent changes in ride height initiated at short intervals can overheat the compressor, causing the system to briefly suspend active operation.◀

CarManuals2.com

Variable Ride Height on both axles*

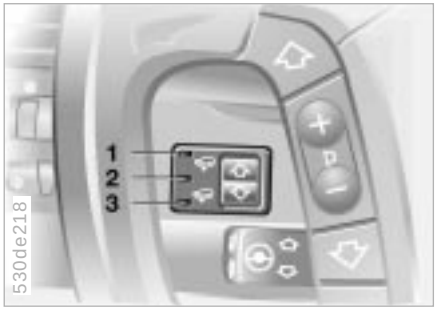

Ride-height display

1 Off-Road

2 Standard

3 Access

The LEDs not only show the current ride height, but also indicate changes:

▷ LED on: indicates the vehicle's current ride height

▷ Ride-height LED flashes while the LED for the earlier level remains on: the ride height is being adjusted to a new level, either automatically or in response to driver input at the button.

When the suspension reaches the new ride height the flashing LED reverts to continuous operation, and the LED for the earlier level goes out

▷ LED for current ride height flashes for roughly 3 seconds when you press the button: change in ride height is not possible.

Raising

Available only when the engine is running.

From "Standard" to "Off-Road":

Press button 1 while traveling at a speed of less than approx. 30 mph (50 km/h).

From "Access" to "Standard":

▷ Press button 1 or

▷ The setting automatically reverts to the "standard" setting once the vehicle exceeds a speed of roughly 20 mph (35 km/h).

CarManuals2.com

Variable Ride Height on both axles*

Lowering

Available with key in position 2.

From "Standard" to "Access":

1. Press button 2 while traveling at less than approx. 50 mph (80 km/h). The system enters its preselection mode. The preselection mode is canceled
   - ▷ by pressing button 1
   - ▷ automatically once the vehicle exceeds a speed of approx. 50 mph (80 km/h) or roughly 60 seconds after button 2 is pressed
2. Reduce speed to below approx. 15 mph (25 km/h) within roughly 60 seconds after pressing button 2.

▷ When you press button 2 at speeds below approx. 15 mph (25 km/h) the system automatically lowers the vehicle to the "Access" level.◀

From "Off-Road" to "Standard":

▷ Press button 2 or

▷ automatically once you exceed a speed of approx. 30 mph (50 km/h).

CarManuals2.com

Tire Pressure Monitor (RDC)*

The concept

RDC monitors the tire pressures at all four wheels, even when the vehicle is moving. The system provides an alert whenever the inflation pressure drops significantly below the specified pressure in one or more tires.

In order for the system to "learn" the correct tire inflation pressure, check the inflation pressures in all tires, refer to the table on page 27 and make any necessary corrections. Then activate the system.

This indicator lamp in the instrument cluster or the Check Control will inform you if the tire pressure is not correct.

CarManuals2.com

To switch the system on

1. Turn the ignition key to position 2 (do not start the engine)
2. Maintain pressure on the button until the yellow indicator lamp in the instrument cluster comes on for several seconds or the message "SET TIRE PRESSURE" appears in the Check Control
3. After you have driven for a few minutes, the RDC will import the current inflation pressure in the tires as the reference values which the system will monitor.

You will only have to repeat this procedure if the tire inflation pressure must be corrected. Otherwise, the RDC functions automatically when the ignition key is in position 2, and thus operates whenever the vehicle is driven.

Loss of tire pressure

If, after a certain period of time, the inflation pressure has gone down significantly (which is normal for any tire), the yellow indicator lamp comes on or the message "CHECK TIRE PRESSURE" appears in the Check Control.

This alerts you that you should have the tires inflated to the specified pressures as soon as possible.

▷ If you are prompted to check the tire pressure shortly after a correction has been made, this indicates that the corrected values were not accurate. Please check the inflation pressure again and make corrections according to the inflation pressure table.◀

Flat tire

If there is a tire failure with a loss of inflation pressure, the red indicator lamp comes on or the message "TIRE DEFECTIVE" appears in the Check Control. In addition, a gong sounds.

If this occurs, reduce vehicle speed immediately and stop the vehicle in a safe location. Avoid hard brake applications. Do not oversteer. Replace the flat tire.

The spare tire which is available in your vehicle as standard equipment is equipped with the electronics required for RDC and, following activation of the system, is also monitored after it is mounted.◀

RDC cannot alert you to severe and sudden tire damage caused by external factors.◀

Have the tires changed at your BMW Sports Activity Vehicle center.
Your BMW Sports Activity Vehicle center has the information needed for working with RDC and is equipped with the necessary special tools.◀

System malfunction

CarManuals2.com

During the period of the malfunction, the yellow indicator lamp comes on or the message "TIRECONTROL INACTIVE" appears in the Check Control.

You will also see the same message

- ▷ in the event of a system malfunction
- ▷ if a wheel is mounted without the RDC electronics
- ▷ if, in addition to the spare tire, additional wheels with RDC electronics are on board.

Please contact your BMW Sports Activity Vehicle center for additional information.

Adaptive brake light

The adaptive brake light (in preparation) provides drivers of following vehicles with an indication of the intensity with which the brakes are being applied in your own vehicle.

The display occurs in two stages:

- ▷ Normal braking:
  The brake light units within the taillight clusters and the high-mount brake light integrated within the rear spoiler both light up with normal intensity
- ▷ Hard braking or braking with ABS active:
  The taillights also come on, lighting up with the same intensity as the brake lights to provide a larger a more conspicuous warning.

Parking lamps (side marker lamps)

With the switch in this position, the front, rear and side vehicle lighting is switched on.
For lighting on one side for parking as an additional feature, refer to page 101.

Low beams

When the ignition is switched off and the low beams are on, only the parking lamps (side marker lamps) remain on.

"Follow me home" lamps:
When you activate the headlamp flasher after parking the vehicle and switching off the lamps, the low beams will come on for a brief period. You may also have this function deactivated if you wish.◀

CarManuals2.com

LIGHTS ON warning

Whenever you open the driver's door, after having turned the ignition key to position 0, you will hear a buzzing sound for a few seconds to remind you that the lamps have not been switched off.

On vehicles with alphanumeric Check Control*:
The reminder is given through the Check Control.

Daytime driving lamps*

The headlamps are automatically switched on for daylight driving at ignition key position 2.

Automatic headlamp control*

When the switch is set to this position the system automatically activates or deactivates the low beams in response to changes in ambient light (in tunnels, at dusk, etc.) as well as rain and snow.

The vehicle's external lamps remain on constantly when you switch on the fog lamps after the headlamps have come on automatically.◀

Automatic headlamp control cannot serve as a substitute for the driver's judgement in determining when the vehicle lamps should be switched on. For example, the sensors are not able to detect fog. To avoid safety risks, you should respond to these kinds of low-visibility situations by switching the headlamps on manually.◀

You can have the sensitivity of your vehicle's automatic headlamp control adjusted.◀

Turn the rotary dial to adjust the illumination intensity.

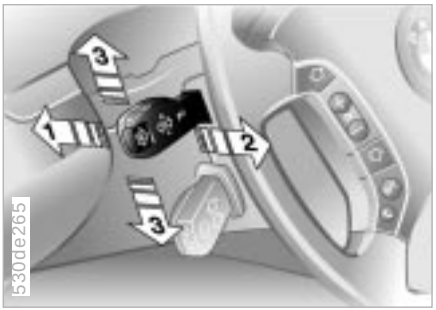

1 High beams (blue indicator lamp)

2 Headlamp flasher (blue indicator lamp)

3 Standing lamps

Standing lamps, left or right*

As an additional feature, you can illuminate your vehicle on either side for parking, if you wish to do so:

With the ignition key in position 0, engage the lever in the appropriate turn signal position.

Fog lamps

A green indicator lamp appears in the instrument cluster to indicate that the front fog lamps are on.

If the high beams are switched on, the fog lamps go out.

If the automatic headlamp control is activated, the low beams will automatically be switched on when the front fog lamps are switched on.◀

CarManuals2.com

Interior lamps

The interior lamps operate automatically.

Switching the interior lamps on and off manually

Press the button (arrow) briefly.

If you want the interior lamps to remain off all the time, press and hold the button for approx. 3 seconds.

Press the button briefly to revert to normal operation.

The button for the interior lamps in the rear passenger area only switches these lamps on and off.

Footwell and cargo area lamps

The lamps are controlled in the same manner as the front interior lamps.

Front area lighting*

This lighting system in the two exterior mirrors illuminates the ground in the area near the two front doors. It is also controlled in the same manner as the front interior lamps, but it does not function while the vehicle is moving.

CarManuals2.com

Reading lamps*

Reading lamps are provided in the front and rear* near the interior lamp. They can be switched on and off with the button (arrows) next to each lamp.

▷ In order to prevent battery discharge, all of the lamps in the vehicle are switched off automatically approx. 15 minutes after the ignition key is turned to position 0.◀

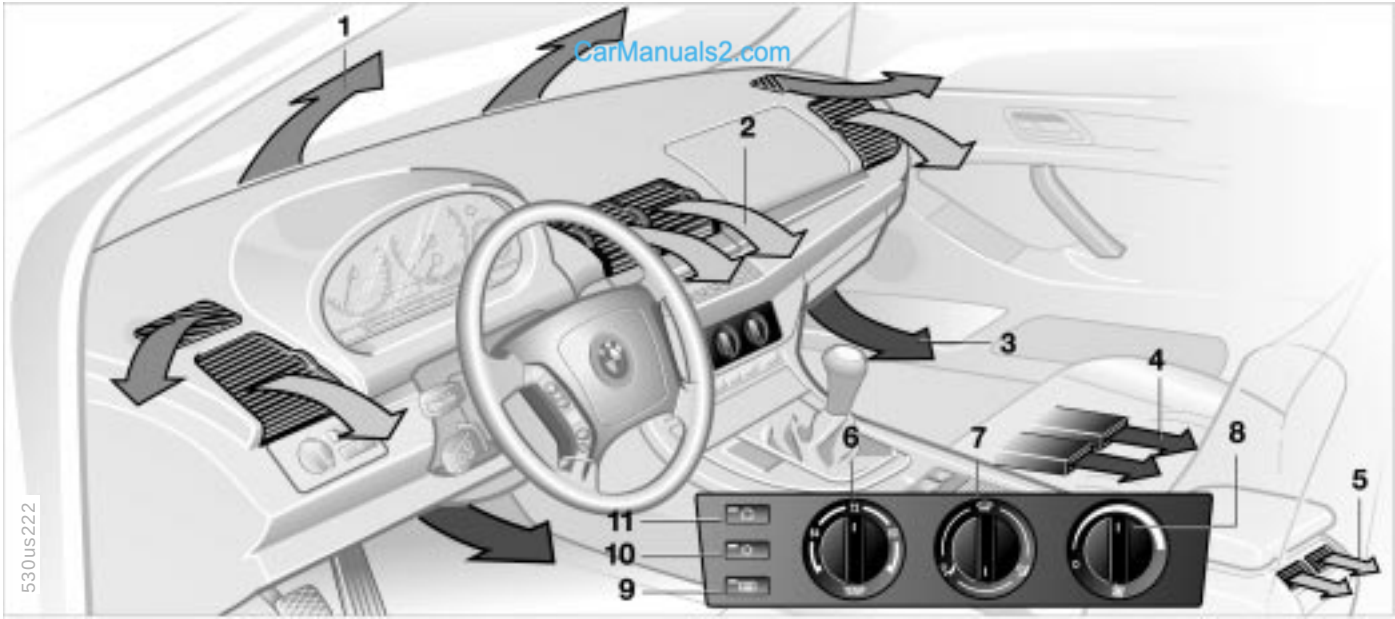

CarManuals2.com

1 Airflow directed toward the windshield and side windows
2 Airflow for the upper body 105
3 Front footwell ventilation
4 Rear footwell ventilation
5 Airflow for the upper body in the rear seat 105
6 Temperature 104
7 Air distribution 104
8 Air supply 104
9 Rear window defroster 104
10 Cooling 104
11 Recirculated-air mode 104

Temperature

The graduations on the dial provide general reference values for the interior temperature. We recommend +72 °F (+22 °C) as a comfortable setting. When you start the vehicle, the system adjusts the air to the selected temperature as quickly as possible, and then maintains that temperature constantly.

Air distribution

You can direct air to flow onto the windows, toward the upper body and into the footwell. All intermediate settings are possible. In the setting, there is a low flow of air onto the windows to keep them free of condensation.

Air supply

You can adjust the air supply through an infinitely-variable range. The heating and ventilation become more and more effective as the air supply settings are increased. In the "0" setting, the blower and climate control are switched off and the outside air supply is blocked.

Rear window defroster

CarManuals2.com

When the rear window defroster is activated, the indicator lamp comes on. The rear window defroster switches off automatically.

Cooling

The air is cooled and dehumidified and – depending on the temperature setting – warmed again when the air conditioner system is switched on. Depending on the weather, the windshield may fog over briefly when the engine is started. You can reduce condensation forming on the windows by switching on the air conditioner.

Condensation forms in the air conditioner system during operation, which then exits under the vehicle. Traces of condensed water of this kind are thus normal.◀

Recirculated-air mode

You can respond to unpleasant odors outside the vehicle by temporarily switching off the outside air supply. The system then recirculates the air currently within the vehicle.

If you have a steering wheel with multifunction buttons with the button for the recirculated-air mode, you can also use this button to switch to the recirculated-air mode, refer to page 22.

If the windows fog over in the recirculated-air mode, switch the recirculated-air mode off and increase the air supply as required.◀

Draft-free ventilation

You can adjust the vent outlets for the upper body area completely for your personal comfort:

1 Rotary dials for opening and closing the vent outlets through an infinitely-variable range

2 Levers for adjusting airflow direction

3 With the rotary dial you can adjust the temperature of the incoming air:
▷ Turn toward blue – colder
▷ Turn toward red – warmer.

Rear passenger area ventilation

1 Rotary dial for opening and closing the vent outlets through an infinitely-variable range

2 Levers for adjusting airflow direction.

The air that flows out here is somewhat cooler than the air delivered to the foot-well.

Microfilter

The microfilter removes dust and pollen from the incoming air. It is replaced by your BMW Sports Activity Vehicle center during regular maintenance. A substantial reduction in air supply indicates that the filter must be replaced before normal maintenance.

CarManuals2.com

To defrost windows and remove condensation

1. You can specify an interior temperature that is comfortable for you with the rotary temperature dial. A good starting point is +72 °F (+22 °C)
2. Set the air distribution rotary dial to
3. Set the blower/air supply rotary dial completely to the right
4. Close the vent outlets in the rear seating area
5. Switch on the rear window defroster to defrost the rear window.

Automatic climate control*

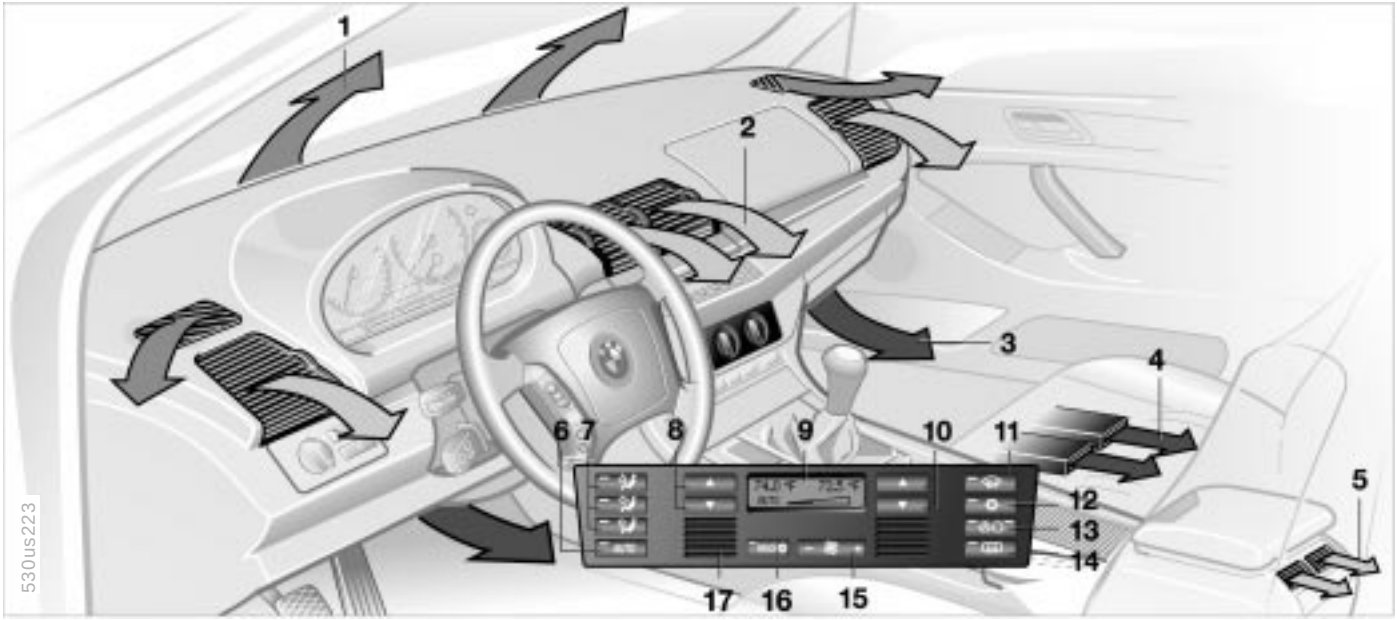

1 Airflow directed toward the windshield and side windows

2 Airflow for the upper body 110

3 Front footwell ventilation

4 Rear footwell ventilation

5 Airflow for the upper body in the rear seat 110

6 Automatic air distribution 108

7 Individual air distribution 108

8 Temperature control – left-hand side 108

9 Display for temperature and air supply 108

CarManuals2.com

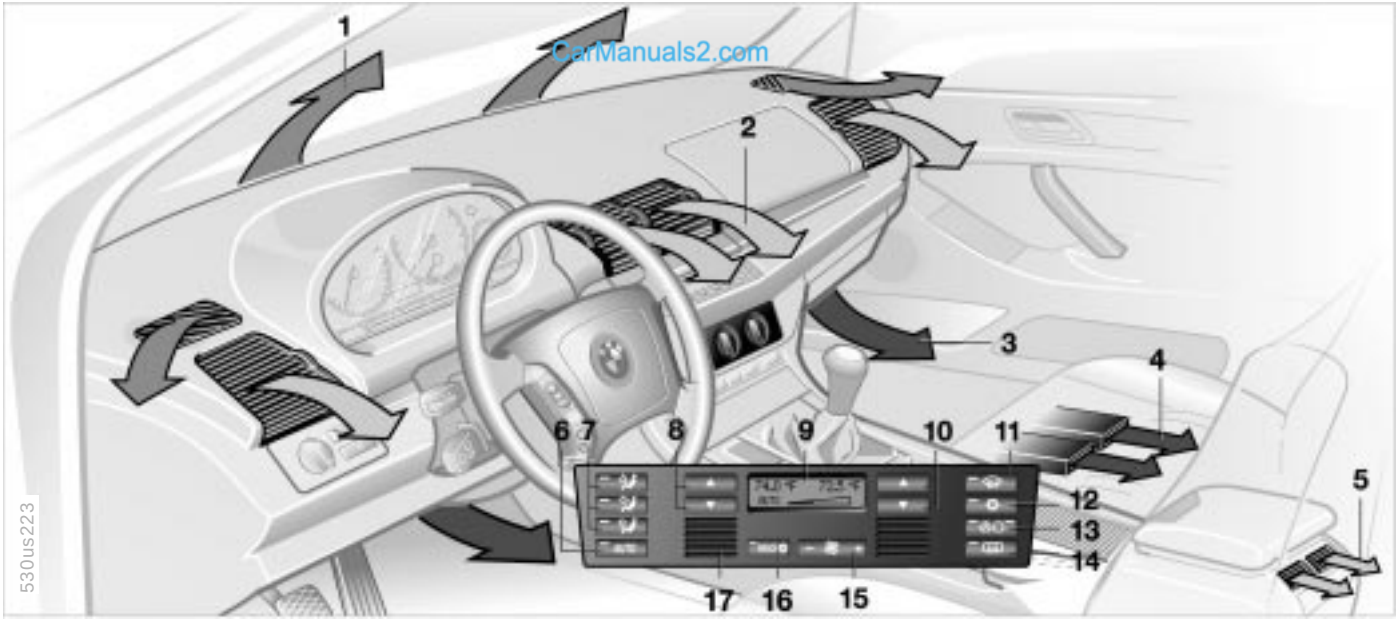

CarManuals2.com

10 Temperature control – right-hand side 108

11 To defrost windows and remove condensation 109

12 Air conditioner 109

13 Automatic recirculated-air control (AUC) 109

14 Rear window defroster 109

15 Air supply 108

16 Maximum cooling 109 or using up residual heat 110

17 Air grille for interior temperature sensor – please keep clear and unobstructed

Tips for pleasant driving

Use the automatic system; that is press AUTO button 6. Select an interior temperature that is comfortable for you.

Detailed setting options are described for you in the following section.

Your vehicle is set in such a manner that, when you unlock the vehicle via remote control with your personalized key, your own setting for the automatic climate control is initiated.◀

Automatic air distribution

The AUTO program assumes the adjustment of the air distribution and the air supply for you and also adapts the temperature to external influences (summer, winter) to meet preferences you can specify.

Individual air distribution

You can cancel the AUTO program by selecting specific air distribution patterns for your personal comfort, the automatic air supply remains in operation. You can direct air to flow onto the windows, toward the upper body, and into the footwell. You can reactivate the automatic air distribution mode by selecting the AUTO button.

Temperature

You can make individual temperature settings on the driver's side or the front passenger side. Your settings will be shown in the display 9. The displayed temperatures are reference values for the interior temperature. We recommend +72 °F (+22 °C) as a comfortable setting, whether the air conditioner is operating or not. When you start the vehicle, this system ensures that the selected temperature is achieved as quickly as possible. It then maintains this temperature, regardless of the season.

Air supply

In the AUTO program, the air supply is controlled automatically. AUTO will appear in the display 9, refer to the overview on page 106. Use "+" and "–" to vary the air supply. When your setting is displayed by bars, the automatic air supply is switched off. Automatic air distribution maintains its setting. You can reactivate the automatic air supply by pressing the AUTO button.

When you press "–" during operation at minimum blower speed all displays are canceled: the blower, heating and air conditioner are switched off. The outside air supply is closed. You can switch the system back on by pressing any button of the automatic climate control.

To defrost windows and remove condensation

This program quickly removes ice and condensation from the windshield and the side windows.

CarManuals2.com

Air conditioner

The air is cooled and dehumidified and – depending on the temperature setting – warmed again when the air conditioner system is switched on. Depending on the weather, the windshield may fog over briefly when the engine is started. You can reduce condensation forming on the windows by switching on the air conditioner.

▷ Condensation forms in the air conditioner system during operation, which then exits under the vehicle. Traces of condensed water of this kind are thus normal.◀

Maximum cooling

You will get maximum cooling capacity using this program if the engine is running and the outside temperature is above approx. +41 °F (+5 °C).

The temperature display 9 jumps to +60 °F (+16 °C), the system switches over to the recirculated-air mode, and the air streams out of the ventilation grill with the maximum amount of flow. That is why you need to keep these open if you select this program.

Automatic recirculated-air control (AUC)

If there are unpleasant odors or pollutants in the outside air, you can temporarily block the airflow from the outside. The system then recirculates the air currently within the vehicle.

Press the button repeatedly to run through the following control sequence:

- ▷ Indicator lamps off: outside air supply operational
- ▷ Left-hand indicator lamp on – AUC mode: the system recognizes pollutants in the outside air and blocks the flow of air when necessary. The system then recirculates the air currently within the vehicle. Depending on the air quality, the automatic system then switches back and forth between outside air supply and recirculation of the air within the vehicle
- ▷ Right-hand indicator lamp on: the outside air supply into the vehicle is completely blocked. The system then recirculates the air currently within the vehicle.

CarManuals2.com

If you have a steering wheel with multi-function buttons with the button for recirculated-air mode (refer to page 22), you can also use this button to switch between "Off" and the recirculated-air mode or AUC and the recirculated-air mode.

If the windows fog over in the recirculated-air mode, switch the recirculated-air mode off and increase the air supply as required.◀

Rear window defroster

When the rear window defroster is activated, the indicator lamp comes on. The rear window defroster switches off automatically.

Residual heat mode

The heat which is stored in the engine is utilized for heating the interior when the engine has been switched off (while waiting at a railroad crossing, for instance). In ignition key position 1, you can alter the settings of the automatic climate control. With the ignition key in position 0, the system automatically directs heated air to the windshield, side windows and footwells.

This function may be activated when the outside temperature is below approx. +59 °F (+15 °C), the engine is at operating temperature, and the battery is adequately charged. The LED on the button will light up when all conditions have been met.◀

Draft-free ventilation

You can adjust the vent outlets for the upper body area to select the optimum airflow rates and directions for your personal comfort:

CarManuals2.com

1 Rotary dials for opening and closing the vent outlets through an infinitely-variable range

2 Selector levers for airflow direction

3 With the rotary dial you can adjust the temperature of the incoming air.
▷ Turn toward blue – colder
▷ Turn toward red – warmer.

Rear passenger area climate control

1 Air supply

2 Temperature

3 Adjusting the direction of the airflow

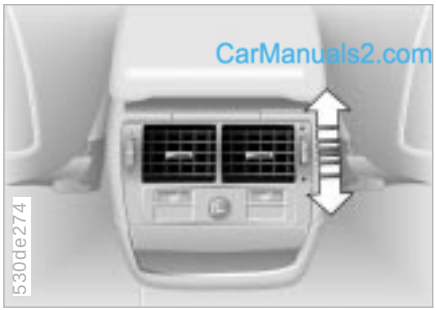

Air supply

0 Blower off

I Maximum blower speed

You can adjust the air supply for the vent outlets through an infinitely-variable range between the "0" and "I" settings.

In the "0" setting, the blower is switched off and the supply of air through the vent outlets is blocked.

Individual adjustments on the front-seat control elements influence the air supply for rear passenger area climate control.

Temperature

Passengers in the rear seating area can adjust their own temperature for the vent outlets:

▷ Turn toward blue – colder
▷ Turn toward red – warmer

When you start the vehicle, this system ensures that the selected temperature is achieved as quickly as possible. It then maintains this temperature, regardless of the season.

▷ A temperature setting is only possible when the blower is switched on (not in the "0" setting).◀

Microfilter, activated-charcoal filter

The microfilter removes dust and pollen from the incoming air. The activated-charcoal filter provides additional protection by filtering gaseous pollutants from the outside air. Your BMW Sports Activity Vehicle center replaces this combined filter as a standard part of your scheduled maintenance. A substantial reduction in air supply indicates that the filter must be replaced before normal maintenance.

Sunshades*

Sunshades for rear side windows*

Use the strap to pull out the shades, then hook them in the provided attachment.

Independent ventilation system*

CarManuals2.com

You can use this system to ventilate the interior and lower its temperature, using the blower of the automatic climate control.

The independent ventilation system is operated via the Multi-Information display (MID), refer to page 85 or via the onboard computer, refer to the separate Owner's Manual.

You can set two different times for the system to start; it will remain active for 30 minutes. You can also switch it on and off directly. Since the system uses a substantial amount of electrical current, you should refrain from switching it on twice in succession without allowing the battery to be recharged in normal operation between use.

When a preselected activation time is set, the independent ventilation system is operational at outside temperatures above +60 °F (+16 °C), or by direct switch activation. It cannot be switched on when the vehicle is moving.

The air emerges via the vent outlets for the upper body. Therefore, the vent outlets must be open for the system to operate.

The concept

The BMW Universal Transmitter replaces up to three hand-held transmitters of different devices such as garage door openers, alarm systems, or door locking systems. The BMW Universal Transmitter recognizes and "learns" the transmitted signal of each of the original hand-held transmitters.

The signal of an original hand-held transmitter can be programmed on one of the three channel keys. Following that, each of the devices can be actuated with the appropriately-programmed channel key. The indicator lamp flashes to confirm transmission of the signal.

If the vehicle is sold, the memory of the channel keys should be cleared as described on page 115.

During programming and before every remote actuation of a programmed device by the BMW Universal Transmitter, check to be sure that there are no persons, animals or objects within the actuation range of the device in order to prevent possible injuries or damage. Also, comply with the safety precautions of the original hand-held transmitter.◀

To Canadian residents:
During programming, your hand-held transmitter may automatically stop transmitting after two seconds. This may not be long enough to program the BMW Universal Transmitter. If you are programming from one of these hand-held transmitters, the Universal Transmitter's light may begin to flash in a series of double-blinks. If this occurs, continue to hold the button of the Universal Transmitter while you reactivate your hand-held transmitter. You may have to repeat this function several times while programming.◀

CarManuals2.com

Before programming, read the "User information" section on page 115.◀

Original hand-held transmitter

If this symbol is present on the packaging or in the instructions of the original hand-held transmitter, it may be assumed that this hand-held transmitter is compatible with the BMW Universal Transmitter.

Checking for the conversion code

To determine whether the original hand-held transmitter is provided with a conversion-code system, you may either read the instructions for the original hand-held transmitter or program a channel key as described on the next page (left-hand column under "Programming").

Then press and hold the programmed channel key of the BMW Universal Transmitter. If the indicator lamp of the BMW Universal Transmitter flashes for two seconds and then comes on steadily, the original hand-held transmitter is provided with a conversion-code system. With a conversion-code system, program the channel keys as described on the next page (right-hand column under "Programming a hand-held transmitter with conversion code").

If you have additional questions, please consult your BMW Sports Activity Vehicle center or call 1-800-355-3515.
You can also visit this website: www.bmwusa.com.◀

Programming

1 Channel keys

2 Indicator lamp

3 Receiver for programming

Read and comply with the safety precautions on the previous page.◀

1. Turn the ignition key to position 2
2. For initial use:
   Press and hold both outside keys 1 until the indicator lamp 2 flashes, and then release them. The three channel keys are cleared
3. Hold the original hand-held transmitter toward the receiver 3 a maximum of 2 in (5 cm) away
4. Press the transmission key of the original hand-held transmitter (arrow 2) and the desired channel key of the Integrated Universal Remote Control (arrow 1) simultaneously. Release both keys as soon as the indicator lamp flashes rapidly
5. To program other original hand-held transmitters, repeat steps 3 and 4.

The corresponding channel key is now programmed with the signal of the original hand-held transmitter.

CarManuals2.com

Programming a hand-held transmitter with conversion code

Read and comply with the safety precautions on the previous page.◀

When programming the BMW Universal Transmitter, consult the instructions for the specific device. For using the BMW Universal Transmitter with a conversion-code system, note the following supplemental programming instructions:

A second person facilitates programming of the BMW Universal Transmitter.◀

1. Program the BMW Universal Transmitter as described previously under "Programming"
2. Press and hold the programming key on the receiver of the device for approx. two seconds until the programming lamp on the device comes on
3. Press the desired channel key of the BMW Universal Transmitter three times.

If you have additional questions, please consult your BMW Sports Activity Vehicle center.◀

Clearing the channel keys

Read and comply with the safety precautions on page 113.◀

The memory of individual channel keys cannot be cleared. However, the three channel keys can be cleared together as follows:

▷ Press and hold both outside keys of the BMW Universal Transmitter until the indicator lamp flashes, and then release them.

All of the channel keys are cleared.

User information

CarManuals2.com

Do not use this BMW Universal Transmitter with any garage door opener that lacks safety "stop" and "reverse" features as required by federal safety standards (this includes any garage door opener model manufactured before April 1, 1982).

This device complies with Section 15 of the FCC Rules. Operation is subject to the following two conditions: as defined in the regulations, this device must not emit harmful interference, and must be shielded against interference from external sources to prevent unauthorized or inadvertent activation.

Glove compartment

To open

Pull the handle. The lamp inside the glove compartment comes on.

To close

Fold the cover up.

To prevent injury in the event of an accident, close the glove compartment immediately after use.◀

To lock

Use one of the master keys. A master key is also required for unlocking.

If you turn over only your door and ignition key for valet parking (refer to page 30), for example, access to the glove compartment is not possible.◀

Rechargeable flashlight*

Located on the left-hand side of the glove compartment.
Features integral overload-protection, so it can be left in its holder continuously.

CarManuals2.com

To avoid completely discharging and possibly damaging the lamp, always ensure that it is switched off before inserting it in the socket.◀

Storage compartments

You will find two storage compartments in the armrest between the front seats.

To open the top compartment:
Press the button (arrow 1).
You will find a cellular phone* in this compartment.

To move the armrest or open the lower compartment:
Pull the handle (arrow 2).
In this compartment, you will find a coin tray and a storage compartment* for cassettes or CDs.

You will find additional storage compartments in all of the doors as well as on the backrests of the front seats.

Cellular phone*

Hands-free system

On vehicles with telephone preparation*, the hands-free microphone is positioned in the headliner.

For further information on the cellular phone, refer to the separate Owner's Manual.

Beverage holder

Front

Below the sliding cover (illustration). Remove the insert which is a compartment for storing pens.

CarManuals2.com

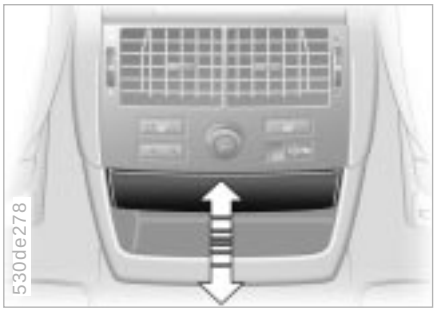

Rear

At the end of the center console under the lighter.

Press briefly to open; push back inward to close.

Glasses compartment

Press the button to open; fold upward to close.

Ashtray, front

To empty

Press the edge of the lid (arrow): The ashtray moves up and can be removed.

Cigarette lighter, front

Press the lighter in.
The lighter can be removed as soon as it retracts.

⚠ Hold or touch the hot cigarette lighter by the knob only. Holding or touching it in other areas could result in burns.
The cigarette lighter remains operational when the ignition key has been removed.
For this reason, do not leave unsupervised children in the vehicle.◀

CarManuals2.com

Cigarette lighter, front

Cigarette lighter socket

This socket is suitable for attaching power supplies for flashlights, car vacuum cleaners and other appliances up to a rating of approx. 200 watts at 12 volts. Avoid damage to the socket caused by inserting plugs of a different shape or size.

You will find additional power outlets in the cargo area, refer to page 125.

Ashtray, rear

To empty

Remove the insert tray.

Cigarette lighter, rear

Press the lighter in.
The lighter can be removed as soon as it retracts.

⚠ Hold or touch the hot cigarette lighter by the knob only. Holding or touching it in other areas could result in burns.
The cigarette lighter remains operational when the ignition key has been removed.
For this reason, do not leave unsupervised children in the vehicle.◀

CarManuals2.com

Ski bag*

The ski bag allows the safe and clean transport of up to 4 pairs of standard skis or up to two snowboards.

With the length of the ski bag and the additional space in the cargo area, you can store skis with a length of up to 6.8 ft (2.1 m). Because of the tapered shape of the bag, the ski bag can only accommodate two pairs of skis with a length of 6.8 ft (2.1 m).

CarManuals2.com

Loading

1. Fold the center armrest outward. Loosen the trim from the upper Velcro® fastener and place it on the armrest
2. Press button 1 downward and swing the cover forward
3. Press button 2: the cover in the cargo area is unlocked. Together with the pull-out cargo floor* (refer to page 126): pull the floor out, release the cover and slide the floor back in – the floor then conceals the cover
4. Extend the ski bag between the front seats. The zipper provides convenient access to the inside of the bag, and can also be left open to promote drying.

To store the ski bag, perform the above steps in reverse sequence.

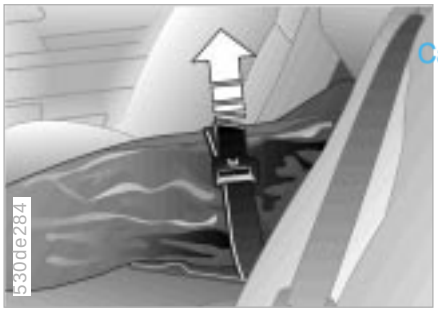

CarManuals2.com

Securing the load

Secure the bag's contents by tightening down the retaining strap at the buckle.◀

Please be sure that the skis are clean before loading them into the bag. Be careful to avoid damage from sharp edges.

If the cover is concealed in the cargo area by the pull-out cargo floor, do not fold the larger rear back-rest down. If you do so, it will damage the cover.◀

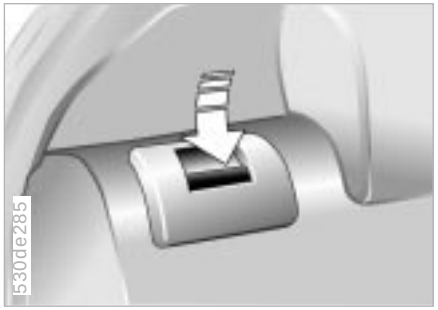

Fold the rear backrests down

Reach into the recess and pull forward (arrow).

When you fold back the backrest, be sure that the catch engages securely. The red warning indicator disappears in the recess when the catch is engaged.
The center safety belt can be retracted only when the larger backrest is engaged.◀

Cargo area cover

Pull the cover out by the handle and hook it in the rear holders.

You can carry light objects such as articles of clothing on the cover.

CarManuals2.com

Do not place heavy or hard objects on the cover. If you do so, they could pose a danger to vehicle occupants during braking or evasive maneuvers.◀

Before you slide it back into position, place the grip in the rear fold of the cover.

When the cover is pulled out, it can be opened behind the rear-seat backrest to gain access to the cargo area from the rear seats during a trip, for example.

For removing the cover, refer to the next page.

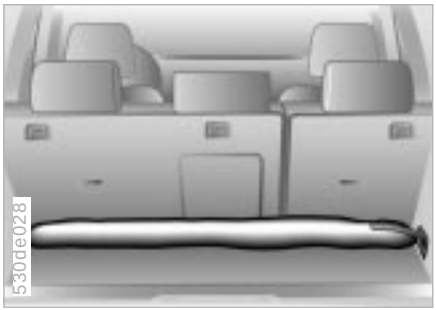

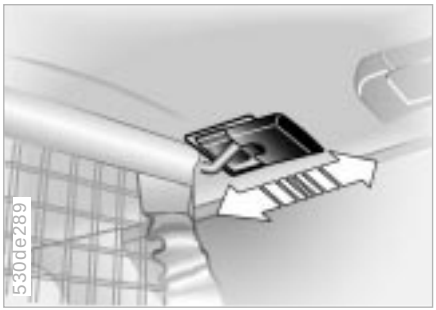

Removing the cover

1. Use both hands to press the cover together on both sides and slide it forward (arrow 1)
2. Lift the cover upward from the rear on both sides (arrow 2) and remove it.

Installation

Slide the cover into the retainers on both sides and then press it down at the rear until it engages.

Partition net*

1. Remove the bag with the partition net from the retainer by releasing the hooks from the lashing eyes on both sides
2. Remove the partition net from the bag and unroll it half way

CarManuals2.com

▷ Note how the bag with the partition net is secured in the vehicle and how the partition net is rolled up and stored in the bag so that you can return everything to its place after use. If your vehicle is equiped with a pull-out cargo floor* be sure to read the note on page 126.◀

3. Slide back the covers on the retainers for the partition net on both sides of the roof (arrow)
4. Insert the curved ends of the partition net rod in the retainers on both sides
5. Now you can slide the covers toward the front again (arrow)

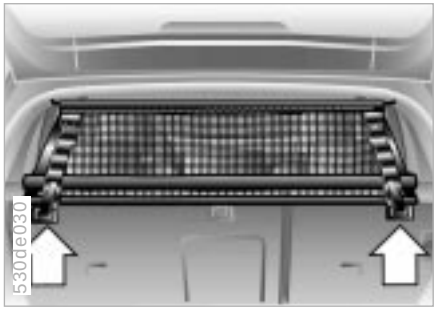

6. Attach the hooks on the bottom of the partition net into the eyes on both sides

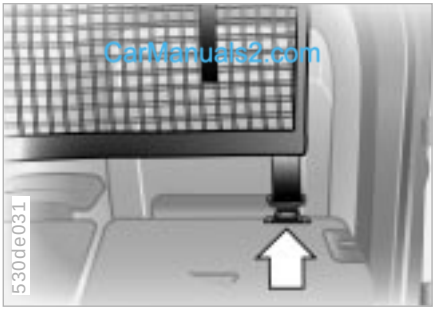

CarManuals2.com

7. When the rear backrests are folded down, you can open the Velcro® strips, completely unroll the partition net, insert it in the front retainers on the roof and attach the three hooks into the eyes.
   The illustration shows securing at the bottom right as an example.

Side covers

Pull the handle to open the side covers.

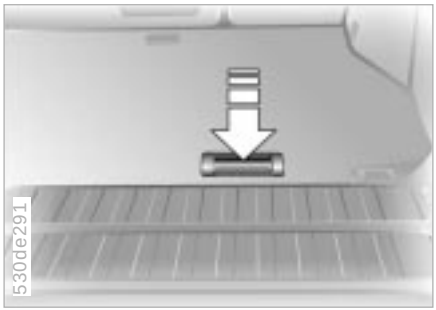

Floor cover

To access the spare wheel.

To release: press the recess in the handle (arrow) and raise the cover with the handle.

Fold the floor cover up

Lift up the black retainer on the lower side of the floor cover and hook it into the upper frame of the liftgate cutout.

Before you fold the floor cover down, return the retainer to its original position.

Power outlets

When you fold the cover cap up, you have access to additional power outlets.

You can use the power outlets for flashlights, car vacuum cleaners or other automotive appliances with up to approx. 200 watts at 12 volts. Avoid damage to the socket caused by inserting plugs of a different shape or size.

Refer also to page 119.

CarManuals2.com

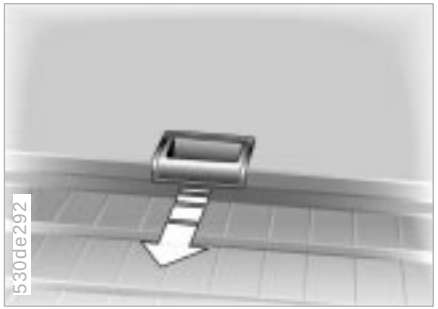

Pull-out cargo floor*

To release, pull the handle recess upward. Then pull the floor out.

Do not drive when the cargo floor is pulled out.
Do not release the cargo floor on steep grades. If you do, it could extend automatically and cause personal injuries.
A load which is not properly secured could begin to slide if the floor extends automatically and then drop to the ground as a result of the rapid braking of the cargo floor at the limit stop.◀

When it is extended, you can load the cargo floor:

▷ With up to 990 lbs (450 kg), distributed evenly across the entire surface
▷ With up to 330 lbs (150 kg) on the rear edge.

Do not overload the cargo floor when it is extended. If you do so, it could cause damage.
When you slide the cargo floor back in, do not grasp it on the bottom. If you do so, there is a risk of personal injury.◀

Raise the cargo floor

For access to the spare wheel or other stored items:

Swing the cargo floor up and secure it with the rod (see detail).

If your vehicle has a partition net*: Take the bag with the partition net out of the retainer (refer to page 123), before you raise the cargo floor panel. Otherwise, the bag could slide downward.◀

CarManuals2.com

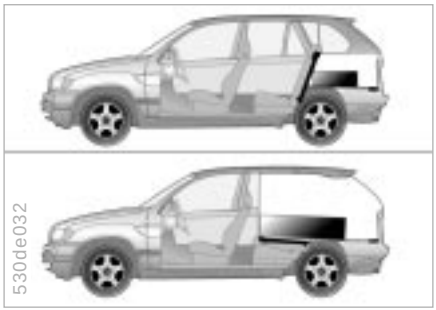

Stowing cargo

When transporting cargo in your BMW:

- ▷ Load heavy cargo as far forward as possible – directly behind the backrests – and as low as possible
- ▷ Cover sharp edges and corners
- ▷ Do not pile objects higher than the top edge of the backrest
- ▷ Fasten the partition net* (refer to page 123) and ensure that carried items cannot pass through the partition net
- ▷ If you are transporting very heavy loads when the rear seat is not occupied, secure the outer safety belts in the opposite buckles.

Securing the load

- ▷ Secure smaller, light pieces with the retaining straps or a luggage net*, or use elastic straps, refer to page 38
- ▷ For large, heavy pieces, see your BMW Sports Activity Vehicle center for load-securing devices*. The lashing eyes provided at the corners of the cargo area serve for mounting these load-securing devices
- ▷ Read and comply with the information enclosed with the load-securing devices.

⚠ Always position and secure the load correctly. If you do not, it can endanger the passengers during braking or evasive maneuvers.
Do not exceed the permissible gross vehicle weight and the permissible axle loads, refer to page 172. If you do, the operating safety of the vehicle is no longer ensured and you are in violation of the law.
Do not carry hard or heavy objects unsecured in the passenger compartment. If you do so, they may be projected through the air during braking and evasive maneuvers, thus endangering vehicle occupants.◀

Roof-mounted luggage rack*

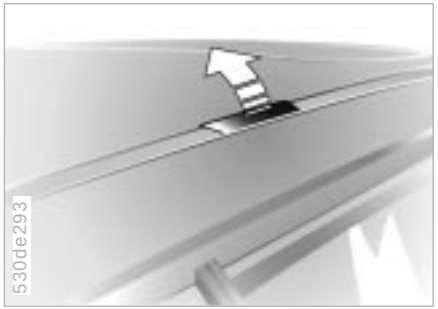

A special rack system is available as an option for your BMW. Please comply with the precautions included with the installation instructions.

Mounting points

Access to the mounting points:
To fold up the cover (arrow), please use the tool which is provided with the rack system.

Cargo loading and driving hints

Carmanuals2.com

Roof-mounted luggage racks raise the center of gravity of the vehicle when they are loaded. For this reason, they exercise a major effect on the vehicle's handling and steering response.

You should therefore always remember not to exceed the approved roof weight, the approved gross vehicle weight or the axle loads when loading the rack.

You will find the specifications under "Technical Data" on page 172.

Make sure that the load is not too heavy, and attempt to distribute it evenly. Always load the heaviest pieces first (on the bottom). Be sure that adequate clearance is maintained for raising the sliding/tilt sunroof, and that objects do not project into the opening path of the liftgate.

⚠ Always ensure that roof-mounted loads are tightly secured, as loose loads can shift or even fly off the roof, posing a serious hazard for following traffic.◀

Drive smoothly. Avoid sudden acceleration and braking maneuvers. Take corners gently.

CarManuals2.com

CarManuals2.com

Overview

Controls and features

Operation, maintenance

Owner service procedures

Technical data

Index

CarManuals2.com

Break-in procedures

To ensure that your vehicle provides maximum economy throughout a long service life, we request that you observe the following instructions:

Engine and axle drive

Up to 1,200 miles (2,000 km):
Drive at varying engine speeds and road speeds, but do not exceed 4,500 rpm and the following road speeds during this initial period:

6-cylinder engines: 100 mph (160 km/h)
8-cylinder engines: 106 mph (170 km/h)

Obey your local and state maximum speed limits.

Refrain from using full throttle and avoid pressing the accelerator beyond the kickdown point.

Once you have driven 1,200 miles (2,000 km), engine and vehicle speeds can gradually be increased.

You should also comply with these break-in procedures if the engine or one of the axle drives is replaced later in the course of the vehicle service life.

Tires

Due to technical factors associated with their manufacture, tires do not achieve their full traction potential until an initial break-in period has elapsed. For this reason, drive with extra care during the initial 200 miles (300 km).

Obey your local and state maximum speed limits.

When the vehicle is operated on wet or slushy roads, a wedge of water may form between the tire and the road surface. This phenomenon is referred to as aquaplaning, or hydroplaning, and can lead to partial or complete loss of traction, vehicle control and braking effectiveness. Reduce your speed on wet roads.◀

Brake system

Approx. 300 miles (500 km) must elapse before the brake pads and rotors achieve the optimal pad-surface and wear patterns required for trouble-free operation and long service life later on.

To break in the separate parking brake drums, apply the parking brake lightly when coasting to a standstill (at a traffic signal, for instance), provided that traffic conditions allow you to do so. To avoid corrosion, repeat this procedure from time to time.

The brake lamps do not light up when the parking brake is applied. Vacuum for the brake system servo unit on your BMW is available only when the engine is running. When you move the vehicle with the engine switched off – when towing, for instance – substantially higher levels of pedal force will be required to brake the vehicle.◀

CarManuals2.com

Your BMW is right at home on all roads and byways – even where the pavement ends. It combines permanent four-wheel drive with the agility of a typical passenger vehicle.

On bad roads

When you are driving on bad roads, there are a few points which you should strictly heed – for your own safety, for that of your passengers, and for the safekeeping of the vehicle:

- ▷ Familiarize yourself with the vehicle before you begin driving. Do not take risks with the vehicle under any circumstances
- ▷ Always adapt vehicle speed to road conditions – the steeper and more uneven the road surface is, the slower the vehicle's speed should be
- ▷ You can operate your vehicle on uphill and downhill gradients with a maximum slope of 50 %. If you intend to drive on either an uphill or downhill gradient of this steepness, check to be sure in advance that the engine oil and coolant levels are both near the "MAX" mark, refer to pages 143 and 145.
  When driving down steep slopes, use the Hill Descent Control (HDC), refer to page 94.
  Starting from a full stop is possible on uphill gradients of up to 32 %.
  The permitted side tilt is also 50 %
- ▷ While driving, watch carefully for obstacles such as rocks or holes. Try to avoid these obstacles whenever possible
- ▷ On hill crests and bumpy roads, for example, be careful to prevent the body from "bottoming" (contact between the body and the ground).
  The ground clearance of the vehicle is:
  8 in (200 mm) with up to four passengers
  7 in (180 mm) fully loaded (without Variable Ride Height)
- ▷ Do not drive in water that is deeper than 20 inches (50 cm). If you must drive through water up to that depth, drive at a walking speed and do not stop.
  After leaving the water, press on the footbrake gently several times while driving at a low speed. The brake applications will help to dry the brakes, thus preventing a reduction in braking performance caused by the moisture.

CarManuals2.com

Back onto the paved road

In recommending that you observe the following points after driving on adverse road surfaces, it is not as a "beauty treatment" for your BMW. Instead, it is intended for the maintenance of driving safety:

- ▷ Clean accumulations of dirt from the body and check the undercarriage for damage
- ▷ Clean mud, snow, ice and other materials from the wheels and tires. Check the tires for damage
- ▷ Check to determine whether rocks, gravel or accumulations of dirt on the brake rotors and calipers could influence braking performance. Remove all such foreign objects
- ▷ In order to clean the brake rotors, apply the footbrake gently several times while driving at a low speed. Be sure that following traffic is not endangered by this
- ▷ For cleaning the parking brake, apply the lever slightly at approx. 25 mph (40 km/h) and continue to drive for approx. 200 yards (200 meters), provided that traffic conditions allow you to do so.

Brakes:
Do not drive with your foot resting on the brake pedal. Even light but consistent pedal pressure can lead to high temperatures, brake wear and possibly even brake failure.
Aquaplaning:
When driving on wet or slushy roads, reduce vehicle speed. If you do not, a wedge of water may form between the tires and the road surface. This phenomenon is referred to as aquaplaning or hydroplaning. It is characterized by a partial or complete loss of contact between the tires and the road surface. The ultimate results are loss of steering and braking control.

Cargo area cover:
Do not place heavy or hard objects on the cargo area cover. These objects could endanger vehicle occupants during heavy brake applications or evasive maneuvers.
Clothes hooks:
When suspending articles of clothing from the hooks, be sure that they will not obstruct the driver's vision. Do not hang heavy objects on the hooks. If you do so, they could cause personal injury during braking or evasive maneuvers.◀

CarManuals2.com

Antilock Brake System (ABS)

The concept

The Antilock Brake System (ABS) keeps the wheels from locking during braking, thereby enhancing active driving safety.

Braking with ABS

If you are in a situation that requires full braking, you will exploit the full benefits of the ABS system if you apply maximum pedal pressure ("panic stop"). Since the vehicle maintains steering responsiveness, you can avoid possible obstacles with a minimum of steering effort, despite the full brake application.

Pulsation at the brake pedal combined with sounds from the hydraulic circuits indicates to the driver that ABS is in its active mode.

Brake fluid level

If the brake fluid level is too low and brake pedal travel has become longer, there may be a defect in one of the two brake system's hydraulic circuits.

Proceed to the nearest BMW Sports Activity Vehicle center. Here increased pressure on the brake pedal may be required, and slight pulling to the side and longer braking distances may result. Please remember to adapt your driving style accordingly.◀

Disc brakes

Carmanuals2.com

When the vehicle is driven only occasionally, during extended periods when the vehicle is not used at all, and in operating conditions where brake applications are less frequent, there is an increased tendency for corrosion of the rotors and accumulation of contamination on the brake pads. This occurs because the minimal pressure which must be exerted by the pads to clean the discs by brake applications is not reached.

If the brake rotors are corroded, they will tend to respond to braking with a pulsating effect which even extended application will fail to cure.

When driving in wet conditions and in heavy rain, it is advisable to apply light pressure to the brake pedal from time to time. Watch traffic conditions to ensure that this maneuver does not endanger other road users. The heat which is generated by the brake applications helps to dry the brake pads and rotors. The braking force is then immediately available when required.

Extended or steep mountain descents should be driven in the gear in which only minimal periodic brake application is required. This avoids excessive strain on the brakes and possible impairment of the braking effect.

Do not coast with the clutch depressed or with the transmission or selector lever in neutral. Do not drive with the engine switched off. The engine provides no braking effect when the clutch is depressed or the transmission is in neutral, and there is no power-assist for braking or steering when the engine is not running.
Have brake inspections performed at a BMW Sports Activity Vehicle center only. If you do not, parts of the four-wheel drive system could be damaged.
Never allow floor mats, carpets or any other objects to protrude into the area around the accelerator, clutch and brake pedals and obstruct their movement.◀

Brake pads

For your own safety: use only brake pads that BMW has released for your particular vehicle model. BMW cannot evaluate non-approved brake pads to determine if they are suited for use, and therefore cannot ensure the operating safety of the vehicle if they are installed.◀

Information for your safety

The factory-approved radial tires are matched to the vehicle and have been selected to provide optimum safety and driving comfort on your vehicle.

It is not merely the tire's service life, but also driving comfort and – above all else – driving safety which depend on the condition of the tires and the maintenance of the specified tire pressure.

Incorrect inflation pressure is a frequent cause of tire damage. It also significantly influences the roadholding ability of your BMW.

Check tire inflation pressures – including the spare wheel – regularly (refer to page 26), at least every two weeks and before beginning a longer trip. If this is not done, incorrect tire pressures can cause driving instability and tire damage, ultimately resulting in an accident.◀

Tire condition

Tire tread – Tire damage

Inspect your tires frequently for tread wear, signs of damage and for foreign objects lodged in the tread. Check the tread pattern depth.

Tread depth should not be allowed to go below 0.12 in (3 mm), even though the legally specified minimum tread depth is 0.063 in (1.6 mm). Tread wear indicators (arrow) are embedded in the base of the tire's tread. Their locations are indicated by the legend TWI – Tread Wear Indicator – at various points on the tire's shoulder. When the tread reaches a depth of 0.063 in (1.6 mm), these indicators appear to signal that the tires have worn to the minimum legal level. Below 0.12 in (3 mm) tread depth, there is an increased risk of aquaplaning, even at relatively moderate speeds and with only small amounts of water on the road.

CarManuals2.com

Do not drive on a deflated (flat) tire. A flat tire greatly impairs steering and braking response, and can lead to complete loss of control over the vehicle.
Avoid overloading the vehicle so that the permitted load on the tires is not exceeded. Overloading leads to overheating and causes damage inside the tires. The ultimate result can assume the form of a sudden air loss.
Unusual vibrations encountered during normal vehicle operation can indicate a flat tire or some other vehicle malfunction. The type of problem can be caused by contact with curbs, etc. This is also true for irregularities in the vehicle's handling characteristics, such as a pronounced tendency to pull to the left or right. Should this occur, respond by immediately reducing your speed.

Tire condition

Proceed carefully to the nearest BMW Sports Activity Vehicle center or professional tire center, or have the vehicle towed in to have it, its wheels and tires inspected.
Tire damage (up to and including blow-outs) can endanger the lives of both the vehicle occupants and other road users.◀

Tire replacement

To maintain good handling and vehicle response, use only tires of a single tread configuration from a single manufacturer. BMW tests and approves wheel/tire combinations.

DOT Quality Grades

Tread wear
Traction AA A B C
Temperature A B C

All passenger vehicle tires must conform to Federal Safety Requirements in addition to these grades.◀

Tread wear

The tread wear grade is a comparative rating based on the wear rate of the tire when tested under controlled conditions on a specified government test course.
For example, a tire graded 150 would wear one and one-half (1 ½) times as well on the government course as a tire graded 100. The relative performance of tires depends upon the actual conditions of their use, however, and may depart significantly from the norm due to variations in driving habits, service practices and differences in road characteristics and climate.

CarManuals2.com

Traction

The traction grades, from highest to lowest, are AA, A, B, and C.
Those grades represent the tire's ability to stop on wet pavement as measured under controlled conditions on specified government test surfaces of asphalt and concrete. A tire marked C may have poor traction performance.

The traction grade assigned to this tire is based on straight-ahead braking traction tests, and does not include acceleration, cornering, aquaplaning, or peak traction characteristics.◀

Temperature

The temperature grades are A (the highest), B, and C, representing the tire's resistance to the generation of heat and its ability to dissipate heat when tested under controlled conditions on a specified indoor laboratory test wheel.
Sustained high temperature can cause the material of the tire to degenerate and reduce tire life, and excessive temperature can lead to a sudden flat tire. The grade C corresponds to a level of performance which all passenger vehicle tires must meet under the Federal Motor Vehicle Safety Standard No. 109. Grades B and A represent higher levels of performance on the laboratory test wheel than the minimum required by law.

The temperature grade for this tire is established for a tire that is properly inflated and not overloaded. Excessive speed, underinflation, or excessive loading, either separately or in combination, can cause heat buildup and possible a tire failure.◀

Uniform Tire Quality Grading

Quality grades can be found where applicable on the tire sidewall between tread shoulder and maximum section width. For example:

Tread wear 200
Traction AA
Temperature A

Do not use retreaded tires, since driving safety may be impaired by their use. This is due to the possible variations in casing structures and, in some cases, to their extreme age, which can lead to a decrease in their durability.◀

Tire age

The date on which the tire was manufactured is indicated by the code on the sidewall:
DOT ... 4101 indicates that the tire was manufactured in week 41 of 2001.

BMW recommends the replacement of all tires when the tires are no more than 6 years old, even if a tire life of 10 years is possible.

CarManuals2.com

The right choice

Use only wheels and tires approved by BMW for the corresponding vehicle model, as otherwise the tires may make contact with the body as the result of tolerances despite the same nominal size being used, resulting in serious accidents. If non-approved wheels and tires are used, BMW cannot evaluate their suitability, and therefore cannot be held liable for driving safety.◀

BMW tests certain tire brands for each tire size, classifies them as road-safe and approves them. Consult your BMW Sports Activity Vehicle center for more information. Observe any regulations applicable in the country of use, e.g. requiring entry in the vehicle documents.

The correct wheel and tire combination affects different systems such as ABS, ATC and DSC. The function of these systems is impaired if improper wheel and tire combinations are used.
For this reason, use only tires of the same brand and tread pattern on the vehicle and, for example, restore the approved wheel and tire combination following a flat tire as soon as possible.◀

The use of rims and lug bolts that do not meet the specifications of the original factory-installed equipment will affect the safe operation of your vehicle and may cause an accident and personal injury.
Never mix tires of different design, such as steel-belted radials with radial bias belted or bias-ply tires, etc. Mixing tire types will adversely affect roadholding and can lead to loss of vehicle control.◀

Storage

Store tires in a cool, dry place, protecting them against light whenever possible. Protect the tires against contact with oil, grease and fuel.

CarManuals2.com

Choosing the right tire

BMW recommends winter tires (M+S radial tires) for operation under inclement winter driving conditions. While so-called all-season tires (M+S designation) provide better winter traction than summer tires with the load ratings H, V, W, Y and ZR, they generally do not achieve the performance of winter tires.

In the interests of safe tracking and steering response, install radial tires made by the same manufacturer and with the same tread configuration on all four wheels if you elect to mount winter tires.

Do not exceed specified maximum speeds

CarManuals2.com

Never exceed the maximum speed for which the tires are rated. Unprofessional attempts by laymen to service tires can lead to damage and accidents.
Have this work performed by skilled professionals only. Your BMW Sports Activity Vehicle center will be glad to assist you with both their expertise and the proper equipment for your vehicle.◀

Tire condition, tire pressure

Winter tires display a perceptible loss in their ability to cope with winter driving conditions once the tread wears to below 0.16 in (4 mm), and should thus be replaced.

Comply with the specified tire inflation pressures – and be sure to have the wheel and tire assemblies balanced every time you change the tires.

Snow chains*

The use of narrow-link BMW snow chains is approved only in pairs on the rear wheels and only with tire size 235/65 R 17. Comply with all manufacturer's safety precautions when mounting the chains. Do not exceed a maximum speed of 30 mph (50 km/h).

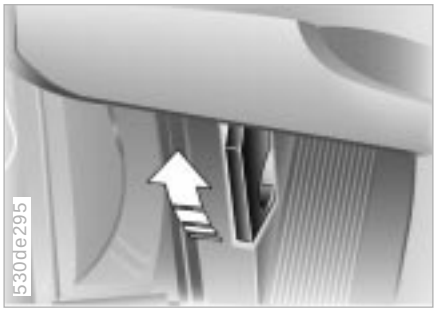

To unlock

Pull the lever located under the left-hand side of the instrument panel.

Do not work on your vehicle without appropriate skills. Failure to work in an informed, professional manner when servicing components and materials constitutes a safety hazard for vehicle occupants and other road users. If you are not familiar with the guidelines, please have the operations performed by your BMW Sports Activity Vehicle center.◀

To open

Pull the release handle and open the hood.

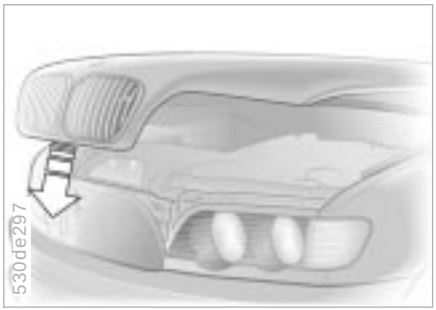

To close

Allow the hood to fall from a height of about 12 in (30 cm) so that it audibly engages.

To avoid injuries, be sure that the travel path of the hood is clear when it is closed, as with all closing procedures.
If it is determined that the hood is not completely closed while driving, stop immediately and close it securely.◀

CarManuals2.com

Engine compartment essentials

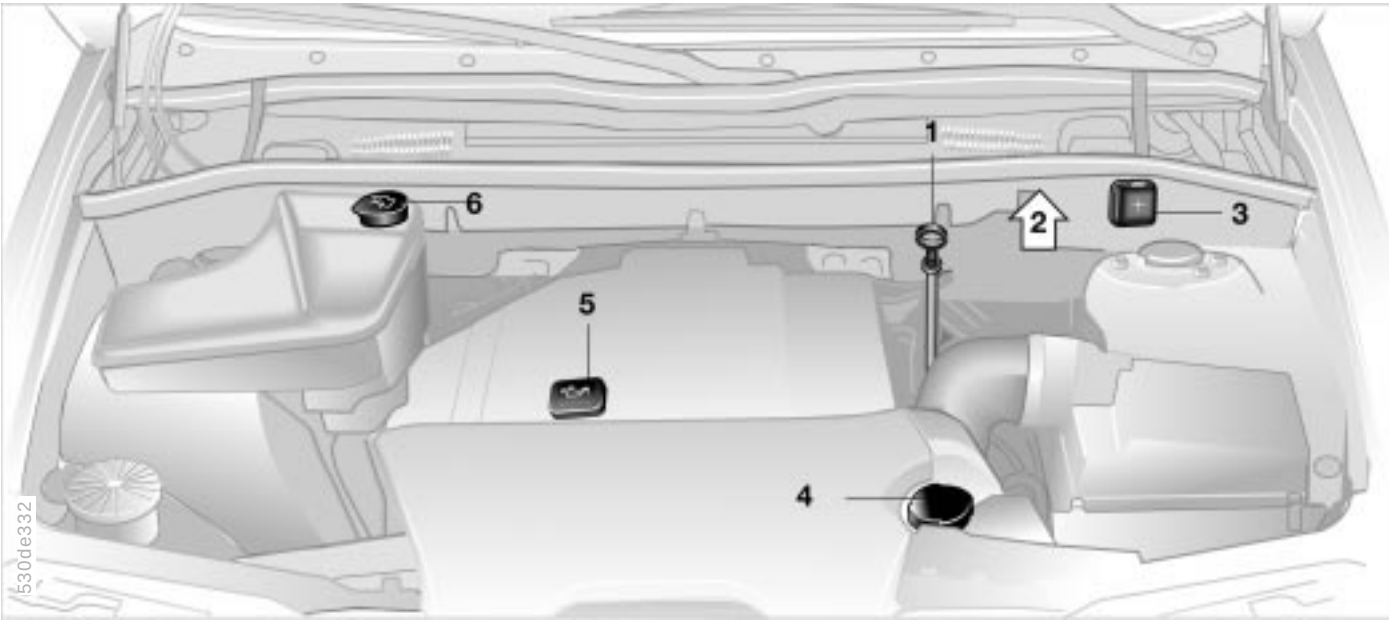

1 Engine oil dipstick 143

2 Reservoir for brake fluid (under the microfilter trim panel) 146

3 Auxiliary terminal for jump starting 164

4 Coolant expansion tank 145

5 Engine oil filler neck 143

6 Reservoir for windshield and headlamp washer system* 143

CarManuals2.com

Washer fluid

530de298

Headlamp* and windshield washer system

Approximate capacity is 8.2 US quarts (7.8 liters).

Fill with water and – if required – with a washer antifreeze (according to manufacturer's recommendations).

It is more convenient to mix the washer fluid before adding it to the reservoir.◀

Antifreeze agent for the washer systems is inflammable. For this reason, keep it away from sources of flame and store it only in its original containers. Store it so that it is inaccessible to children. Comply with the instructions on the containers.◀

Engine oil

530us100

Checking oil level

1. Park the vehicle on a level surface
2. Switch the engine off after it has reached normal operating temperature
3. After approx. 5 minutes, pull the dipstick out and wipe it off with a clean lint-free cloth, paper towel, or similar material
4. Push the dipstick carefully all the way into the guide tube and pull it out again
5. The oil level should be in between the two marks on the dipstick.

As with fuel economy, oil consumption is directly influenced by your driving style and vehicle operating conditions.

CarManuals2.com

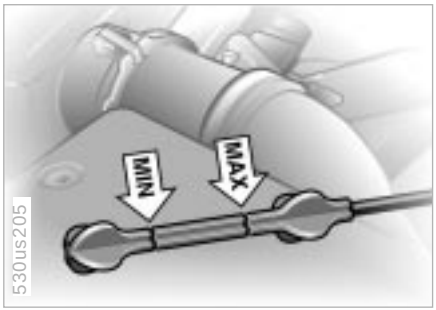

530us205

The oil volume between the two marks on the dipstick corresponds to approx. 1.1 US quarts (1 liter). Do not fill beyond the upper mark on the dipstick. Excess oil will damage the engine

BMW X5 4.6is:
If the vehicle's performance reserves are used extensively (high-performance driving) the oil level should be maintained at the upper graduation on the dipstick.

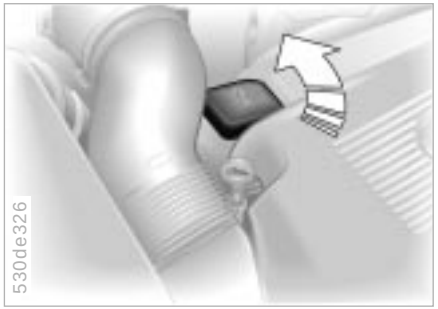

To add oil

While you should wait until the level has dropped to just above the lower mark before adding oil, you should never allow the oil level to fall below this marking.

BMW engines are designed to operate without oil additives; the use of additives could lead to damage in some cases. This is also true for the manual transmission, the automatic transmission, the differential, and the power steering system.◀

Recommendation: have the oil changed by your BMW Sports Activity Vehicle center.

Continuous exposure to used oil has caused cancer in laboratory testing. For this reason, any skin areas that come into contact with oil should be thoroughly washed with soap and water.
Always store oils, grease and similar materials so that they are inaccessible to children. Comply with warning labels and information on containers.◀

CarManuals2.com

Comply with the applicable environmental laws regulating the disposal of used oil.◀

Specified engine oils

The quality of the engine oil selected has critical significance for the operation and service life of an engine. Based on extensive testing, BMW has approved only certain engine oils.

Use only approved "BMW High Performance Synthetic Oil."

If you are unable to obtain "BMW High Performance Synthetic Oil," you can add small amounts of synthetic oil in between oil changes. Use only oils with the API SH specification or higher.

Ask your BMW Sports Activity Vehicle center for details concerning the specific "BMW High Performance Synthetic Oil" or "synthetic oils" which have been approved.◀

You can also call BMW of North America at 1-800-831-1117 or visit this website: www.bmwusa.com to obtain this information.

Viscosity ratings

Viscosity is the oil flow rating as established in SAE classes.

The selection of the correct SAE class depends on the climatic conditions in the area where you typically drive your BMW.

Approved oils are in SAE classes 5W-40 and 5W-30.◀

These oils may be used for driving in all ambient temperatures.

Do not add coolant to the cooling system when the engine is hot. If you attempt to do so, escaping coolant can cause burns.
To avoid the possibility of damage later on, never use anything other than factory-approved, nitrite and amino-free extended-duty antifreeze with corrosion inhibitor. Your BMW Sports Activity Vehicle center is familiar with the factory specifications.
Antifreeze and anticorrosion agents are hazardous to health. You should always store them in their original container and in a location which is inaccessible to children.
Extended-duty antifreeze with corrosion inhibitor contains the flammable substance ethylene–glycol. For this reason, do not spill antifreeze with corrosion inhibitor on hot engine parts. It could ignite and cause serious burns.◀

Checking coolant level and adding coolant

Correct coolant level when the engine is cold approx. +68 °F (+20 °C):

1. Start by turning the cap of the expansion tank counterclockwise. Pause to allow any accumulated pressure to escape, then open
2. The coolant level is correct when the end of the red float is aligned with the upper edge of the filler opening (refer to the arrow in the illustration), or max. 0.8 in (2 cm) higher, i. e. up to the mark on the float (refer also to the schematic diagram, next to the cap)
3. If necessary, add coolant. Slowly add coolant until the correct level is reached – do not overfill.

Comply with the applicable environmental laws regulating the disposal of extended-duty antifreeze with corrosion inhibitor.◀

CarManuals2.com

If the indicator lamp for the brake hydraulic system appears or if the CHECK BRAKE FLUID warning appears in the Check Control: the brake fluid level is too low.

Add brake fluid

The brake fluid reservoir is located under the microfilter housing trim panel on the driver's side of the vehicle. For adding brake fluid or for determining and correcting the cause of brake fluid loss, consult your BMW Sports Activity Vehicle center. Your BMW Sports Activity Vehicle center is familiar with the specifications for factory-approved brake fluids (DOT 4).

Brake fluid loss may result in extended brake pedal travel. For this situation, refer to the notes on page 135.

Brake fluid is hygroscopic, that is, it absorbs moisture from the air over time.
In order to ensure the safety and reliability of the brake system, have the brake fluid changed every two years by a BMW Sports Activity Vehicle center. Refer also to the Service and Warranty Information Booklet (US models) or the Warranty and Service Guide Booklet (Canadian models).
Brake fluid is toxic and damages the vehicle's paint. You should always store it in its original container and in a location which is out of reach of children. Do not spill the fluid and do not fill the brake fluid reservoir beyond the "MAX" mark. The brake fluid could ignite upon contact with hot engine parts and cause serious burns.◀

CarManuals2.com

Comply with the applicable environmental laws regulating the disposal of brake fluid.◀

The BMW Maintenance System has been designed as a reliable means of providing maximum driving and operating safety – and as cost-effectively as possible for you.

Please keep in mind that regular maintenance is not only necessary for the safety of your vehicle, but also plays a significant role in maintaining the resale value of the vehicle.

Service Interval Display

Carmanuals2.com

Conventional systems rely solely on distance traveled to determine when service is due. The BMW Maintenance System, on the other hand, began many years ago to take the actual conditions under which the vehicle is driven into consideration. After all, different drivers can accumulate mileage in very different ways.

From the point of view of maintenance, 62,000 miles (100,000 km) accumulated in short-distance urban driving are not the equivalent of the same distance covered at moderate speeds in long-distance highway travel.

The BMW Maintenance System includes the Engine Oil Service and Inspections I and II.

Determining the maintenance intervals according to the actual loads on the vehicle covers every kind of operating situation. However, even those who drive only short distances – significantly less than 6,000 miles (10,000 km) annually – should have the engine oil changed at least every 2 years since oil deteriorates over time, regardless of use.

Service and Warranty Information Booklet (US models)/Warranty and Service Guide Booklet (Canadian models)

For additional information on maintenance intervals and procedures, please refer to the Service and Warranty Information Booklet (US models) or the Warranty and Service Guide Booklet (Canadian models).

As a precaution against corrosion, it is advisable to have the body checked for damage from rocks or gravel at the same time, depending upon operating conditions.

▷ Have your BMW Sports Activity Vehicle center do the maintenance and repair.

Be sure that all maintenance work is confirmed in the Service and Warranty Information Booklet (US models) or the Warranty and Service Guide Booklet (Canadian models).
These entries will constitute your proof that the vehicle has received regular maintenance. They are also required for warranty claims.◀

Light-emitting diodes (LEDs)

Light-emitting diodes installed behind translucent lenses serve as the light source for many of the controls and displays in your vehicle. The concept behind their operation is related to that employed for lasers, and they are formally designated as Class 1 light-emitting diodes.

Do not remove the protective lens and avoid staring directly at the unfiltered beam for extended periods (several hours), as inflammation of the iris could result.◀

California Proposition 65 Warning

California laws require us to state the following warning:

Engine exhaust, some of its constituents, and certain vehicle components contain or emit chemicals known to the State of California to cause cancer and birth defects or other reproductive harm.◀

CarManuals2.com

OBD interface socket

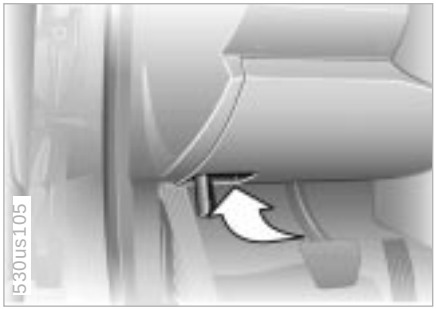

The Onboard Diagnostic (OBD) interface socket is located on the left of the driver's side at the bottom of the instrument panel and under a cover. The cover has the letters "OBD" on it.

The purpose of the OBD system is to ensure proper operation of the emission control system for the vehicle's lifetime. The system monitors emission-related components and systems for deterioration and malfunction.

An illuminated lamp informs you of the need for service, not of the need to stop the vehicle. However, the systems should be checked by your BMW Sports Activity Vehicle center at the earliest possible opportunity.

Under certain conditions, the indicator will blink or flash. This indicates a rather severe level of engine misfire. When this occurs, you should reduce speed and consult the nearest BMW Sports Activity Vehicle center as soon as possible. Severe engine misfire over only a short period of time can seriously damage emission control components, especially the catalytic converter.

OnlyManuals2.com

Service Engine Soon warning lamp for Canadian models.

When the filler cap is not properly tightened, the OBD system can detect the vapor leak and the indicator will light up. If the filler cap is subsequently tightened, the indicator should go out within a few days.◀

CarManuals2.com

CarManuals2.com

Overview

Controls and features

Operation, maintenance

Owner service procedures

Technical data

Index

Under the cargo area floor in a pocket.

Windshield wiper blades

Front

1. Move the wiper to a fold-out position (refer to page 69)
2. Lift the wiper arm and press the securing spring (arrow)
3. Pull the wiper blade off toward the wiper arm
4. Insert the new blade and snap it into place.

Fold the wipers back down onto the windshield before you turn the ignition key to position 1 or 2 again. If you do not, they could be damaged.◀

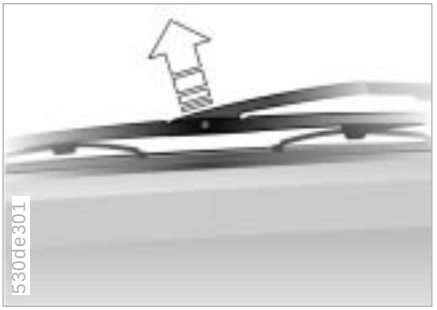

Rear

1. Hold the wiper blade on the window and remove/unclip the wiper arm at the articulated joint (arrow)
2. Insert a new wiper blade and press it on/clip it into the wiper arm.

Use only wiper blades approved by BMW.◀

CarManuals2.com

The lamps and bulbs make essential contributions to the safety of your vehicle. For this reason, follow the instructions below carefully when replacing a bulb. If you are not familiar with any of the procedures, consult your BMW Sports Activity Vehicle center.

Do not touch the glass portion of a new bulb with your bare hands since even small amounts of impurities burn into the surface and reduce the service life of the bulb. Use a clean cloth, paper napkin, or a similar material, or hold the bulb by its metallic base.◀

A replacement bulb set is available from your BMW Sports Activity Vehicle center.

Whenever working on the electrical system, switch off the electrical accessory you are working on or disconnect the cable from the negative terminal of the battery. Failure to do this could result in short circuits.
To prevent injuries and damage, comply with any instructions provided by the bulb manufacturer.◀

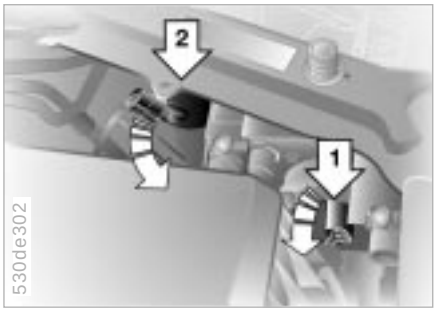

The right side of the engine compartment.

1 Low beams

2 High beams

For checking and adjusting headlamp aim, please contact your BMW Sports Activity Vehicle center.◀

Low beams

H7 bulb, 55 watts

The bulb is pressurized. Therefore, wear safety glasses and protective gloves. Failure to comply with this precaution could lead to injury if the bulb is accidentally damaged during replacement.◀

CarManuals2.com

1. Turn the bulb holder to the left (arrow) and remove
2. Remove and replace the bulb.

High beams

HB3 bulb, 60 watts

The bulb is pressurized. Therefore, wear safety glasses and protective gloves. Failure to comply with this precaution could lead to injury if the bulb is accidentally damaged during replacement.◀

1. Turn the bulb holder to the left and remove
2. Disconnect the plug
3. Plug the new bulb into the plug connector. Be sure that it is securely engaged
4. Install in the opposite order.

When cleaning the headlamps, please observe the following:

- ▷ Do not wipe dry (scratches). Never use abrasives or strong solvents to clean the covers
- ▷ Remove dirt and contamination (such as insects) by soaking with BMW Car Shampoo and then rinsing with plenty of water
- ▷ Always use a deicer spray to remove accumulated ice and snow – never use a scraper.◀

Xenon lamps*

The operating life of these lamp units is extremely long and the likelihood of failure very low, provided that they are not switched on and off a very great number of times. If one of these bulbs should nevertheless fail, it is possible to continue driving with great caution using the fog lamps, provided traffic laws in your area do not prohibit this.

Because of the extremely high voltages involved, any work on the xenon lighting system should be carried out by technically-qualified personnel only. Failure to comply with this creates a risk of fatal injury.◀

Turn signal indicators/Standing lamps (side marker lamps), front

Dual-filament bulb, 28/8 watts

Please contact a BMW Sports Activity Vehicle center in case of a malfunction.

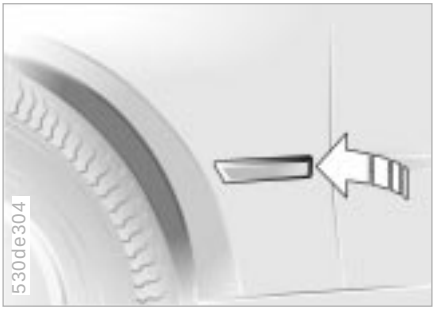

Side turn signal indicators

5 watt bulb

1. Use finger pressure against the rear end of the lamp (arrow) to press it forward for removal
2. Press gently on the bulb and turn it to the left to remove it
3. Replace the bulb.

CarManuals2.com

Front fog lamps

H3 bulb, 55 watts

The bulb is pressurized. Therefore, wear safety glasses and protective gloves. Failure to comply with this precaution could lead to injury if the bulb is damaged during replacement.◀

1. Pull the cover in front of the fog lamp forward
2. Loosen the two screws (arrows) and remove the fog lamp
3. Turn the cover cap on the rear of the fog lamp to the left and remove
4. Unhook the wire clamp, remove the contact base and replace the bulb.

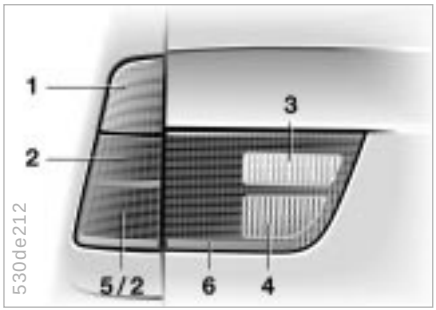

Tail lamp assembly

Tail lamp 2: 21/5 watt bulb
Remaining bulbs: 21 watts

1	Turn signal indicator	yellow or white
2	Rear lamps/ Side marker lamps	red
3	Backup lamps	white
4	Brake lamps	red
5	Reflector	red

CarManuals2.com

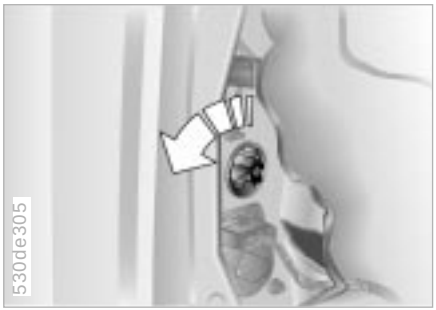

Lamps in the side panel:

1. Open the cover in the side panel
2. Lift the side panel if necessary
3. Press gently on the bulb holder and turn it to the left to remove it
4. Remove the bulb.

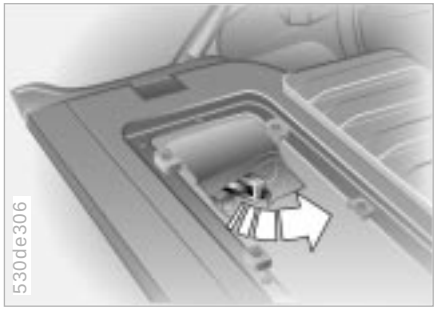

Lamps in the tailgate:

1. Unclip the trim panel in the tailgate with a screwdriver
2. Press gently on the bulb holder and turn it to the left to remove it
3. Remove the bulb.

Center (high-mount) brake lamp

LED strip in the rear spoiler: please contact a BMW Sports Activity Vehicle center in case of a malfunction.

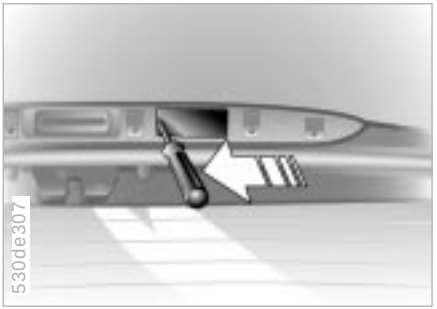

License plate lamps

5 watt bulb

1. Press the lamp out to the side with a screwdriver
2. Remove the lamp and replace the bulb.

Changing a wheel

Safety measures in the event of a flat tire or wheel change: stop the vehicle as far as possible from passing traffic. Park on a firm, flat, surface. Switch on the hazard warning flashers. Turn the steering wheel to the straight-ahead position, remove the key and engage the steering lock. Shift into 1st or reverse (selector lever in "Park" with automatic transmission) and engage the parking brake.
All passengers should be outside the vehicle and well away from your immediate working area (behind a guardrail, for instance).
If a warning triangle or portable hazard warning lamp is required, set it up on the roadside at an appropriate distance from the rear of the vehicle.
Comply with all safety guidelines and regulations.
Change the wheel only on a level, firm surface which is not slippery. Avoid jacking the vehicle up on a soft or slippery surface (snow, ice, very smooth surfaces, etc.), since it could slide sideways.

CarManuals2.com

Position the jack on a firm support surface.
Do not place wooden blocks or similar objects under the jack. If this is done, the jack might not be able to reach its full support capacity because of the limited height.
Do not lie under the vehicle or start the engine when the vehicle is supported by the jack. Failure to comply with this creates a risk of fatal injury.◀

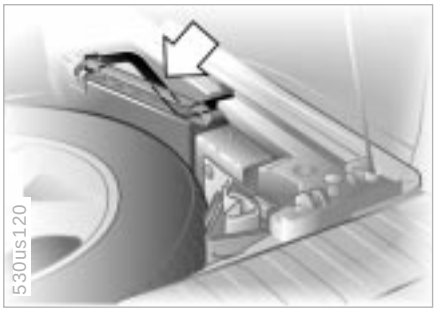

What you will need

In order to avoid rattling noises later, note the position of the tools when you remove them and return them to their original position when you are through using them.

▷ Two wedges (wheel chocks)
Open the liftgate and tailgate.
In the cargo area, fold up the floor cover or pull-out cargo floor, refer to page 125 or 126.
Take out the wedges (arrow) next to the spare wheel

▷ Lug wrench
Is located next to the spare wheel

CarManuals2.com

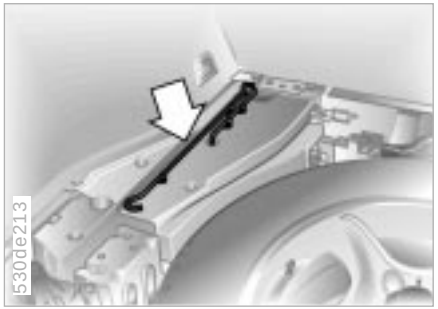

▷ Handle for the jack
Remove from its holder

▷ Jack
Remove the rubber band from the holder (arrow) and take out the jack. When you have completed work, screw the jack all the way back down, remove the handle and insert it into its holder.

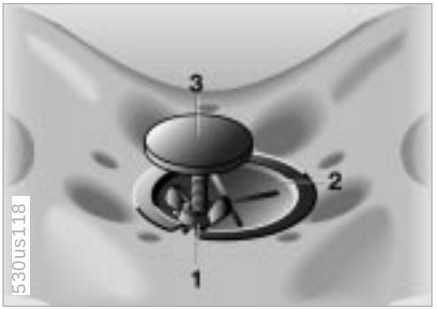

Spare wheel

1. Loosen the wing nut 1
2. Remove the plate 2 to the side
3. Unscrew the threaded rod 3 completely.

CarManuals2.com

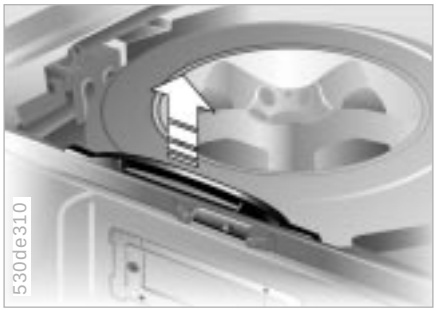

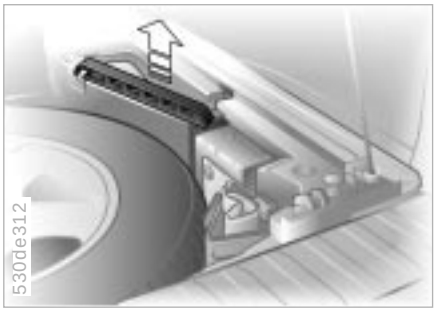

Removal aid for the spare wheel

By using this device, you do not have to lift the spare wheel out of the recess by hand.
Its task is to help you to move the wheel onto the tailgate, from where you can easily lift it off.

1. Close the tailgate again
2. Grasp the handle of the removal aid behind the spare wheel with both hands and pull upward over the tailgate (arrow)
3. Hook both buckles into the latch of the tailgate (arrow); the tailgate is released
4. Remove the support rod from the bracket

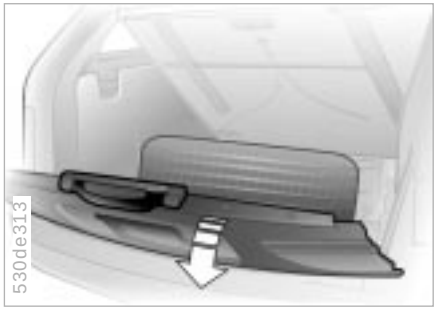

5. Press the tailgate down and hold it there. The spare wheel is now pulled by means of the removal aid onto the tailgate

Hold the tailgate in the opened position and do not allow it to retract sharply upward. If you do so, there is a risk of personal injury and vehicle damage.◀

6. Insert the support rod in the tailgate lock and press down until it engages (arrow 1); then lock hook of rod in striker (arrow 2)

CarManuals2.com

Be sure that the support rod is locked firmly in place. If you fail to do so, it could retract sharply upward and cause personal injury and vehicle damage.◀

7. You can now release the locked tailgate and take the spare wheel down from the tailgate. It is recommended that you leave the tailgate locked into place until you have completed the wheel change and placed the wheel with the defective tire into the removal aid.

Procedure

1. Read carefully and comply with the safety precautions on page 156
2. Secure the vehicle to prevent it from rolling:
   Place the wedges (chocks) behind the wheels on the side opposite the side you are lifting. If the vehicle is parked on a downward slope, place the wedges securely in front of the wheels. If the wheel must be changed on a surface with a more severe slope, take additional precautions to secure the vehicle from rolling
3. Loosen the lug bolts 1/2-turn
4. Insert the jack handle into the jack (refer to the illustration in the next column)

CarManuals2.com

5. Position the jack at the jacking point closest to the flat tire so that the jack base is vertically below the jacking point and the entire surface of the head of the jack will move into the square recess of the jacking point (refer to the illustration detail) when the jack is cranked
6. Jack the vehicle up until the wheel you are changing is raised from the ground
7. Unscrew the lug bolts and remove the wheel
8. Remove accumulations of mud or dirt from the mounting surfaces of the wheel and hub. Clean the lug bolts
9. Position the spare wheel. Secure the wheel by turning at least two lug bolts into opposite bolt holes
10. Screw in the remaining lug bolts. Tighten all the bolts securely
11. Lower the jack and remove it from beneath the vehicle
12. Tighten the lug bolts in a diagonal pattern
13. Check and correct the tire inflation pressure at the earliest opportunity. Vehicles with Tire Pressure Monitor (RDC):
    After mounting the spare tire or correcting the tire inflation pressure, reactivate the system, refer to page 98.

The vehicle jack is designed for changing wheels only. Do not attempt to raise another vehicle model with it or to raise any load of any kind. To do so could cause accidents and personal injury.
To ensure continued safety, have the tightness of the lug bolts checked with a calibrated lug wrench [torque specification: 101 lb-ft (140 Nm)] at the earliest opportunity.◀

Store the wheel and the tools in the order opposite that for removal.

Before removing the support rod, be sure that the tailgate is held down firmly. If you fail to do so, it could retract sharply upward and cause personal injury and vehicle damage. After you remove the rod, close the tailgate carefully. Continue to hold it firmly until it is completely closed.◀

If light-alloy wheels other than original BMW light-alloy wheels have been mounted, it may be necessary to use different lug bolts for those wheels.

Replace the defective tire as soon as possible and have the new wheel/tire balanced.

The spare wheel has a size 235/65 R 17 tire. If you have mounted tires on your vehicle with a different size, have wheels and tires of the same size and specification reinstalled as soon as possible.
When the spare wheel is mounted, the maximum speed rating is 130 mph (210 km/h).◀

Protect valve stems and valves from dirt using screw-on valve stem caps. Dirt in the valve stems frequently leads to slow leaks.

Battery

Battery posts, terminals and related accessories contain lead and lead compounds. Wash hands after handling.◀

Maintenance

The battery is maintenance-free, that is, the original electrolyte will normally last for the service life of the battery under moderate climatic conditions.

For all questions that regard the battery, please consult your BMW Sports Activity Vehicle center. Since the battery is maintenance-free, the following is for your information only.◀

Do not disconnect the battery when the engine is running. If you do so, the ensuing voltage surge will damage the vehicle's onboard electronics.◀

Charging the battery

Charge the battery in the vehicle only when the engine is not running. Use the connections provided in the engine compartment (for correct connections, refer to "Jump-starting" on page 164).

Return used batteries to a recycling point or your BMW Sports Activity Vehicle center. Maintain the battery in an upright position for transport and storage. Secure the battery against tilting during transport.◀

CarManuals2.com

In the glove compartment

Open the glove compartment and turn the two quick-release fasteners to the left.

In the cargo area

Open the right cover by pulling the handle.

CarManuals2.com

Do not attempt to repair a burned fuse or replace it with a fuse having a different color or ampere rating. To do this could cause a fire in the vehicle resulting from a circuit overload.◀

Jump-starting

Do not use spray starter fluids to start the engine.

When your battery is discharged you can used two jumper cables to start your vehicle with power from the battery in a second vehicle. You can also use the same method to help start another vehicle. Always use jumper cables with fully insulated handles on the terminal clamps.

Do not touch the parts conducting current while the engine is running. Failure to comply with this creates a risk of fatal injury. Carefully observe the following instructions to avoid personal injury and/or damage to one or both vehicles.◀

CarManuals2.com

1. Be sure that the battery on the support vehicle is also rated at 12 volts. This information is provided on the top of the battery casing
2. Do not disconnect your battery from your vehicle's electrical system. Switch off all electrical accessories in both vehicles
3. Make absolutely certain that there is no contact between the bodywork of the two vehicles – short circuit hazard
4. Start the engine on the support vehicle and allow it to run

5. Use one jumper cable (+) to connect the positive terminal of the battery in the support vehicle with the auxiliary positive terminal provided in the engine compartment of your BMW specifically for jump starting. The cover on this auxiliary terminal is identified by a "+" symbol, refer to the illustration. To remove the cover, tip up the cap (arrow)

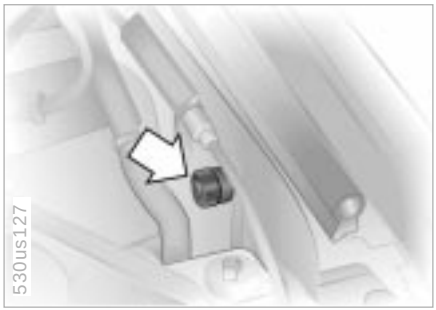

6. Next, connect one end of the other jumper cable (–) to either the support vehicle's negative battery terminal or a suitable ground on its engine or bodywork. Connect the other end to the negative battery terminal or a suitable ground on the vehicle being started. There is a special nut for this on the left side panel of your BMW. Refer to the arrow in the illustration

Always adhere to this sequence when connecting jumper cables; failure to observe this procedure can lead to sparks at the battery terminals and pose an injury hazard.◀

7. Start the support vehicle's engine and let it run at an increased idling speed for a few minutes. Start the engine on the vehicle needing the jump-start, and allow it to run as usual. If the first start attempt is not successful, wait a few minutes before another attempt in order to allow the discharged battery to recharge
8. Before disconnecting the jumper cables let the engines run for a few minutes
9. Then disconnect the jumper cables in reverse sequence.

Depending on the cause of the fault, have the battery recharged by your BMW Sports Activity Vehicle center.

CarManuals2.com

Tow fitting

The screw-in tow fitting is stored beneath the cargo area floor. Carry it with you at all times. This fitting is designed for installation in the tow sockets located at the front and rear of the vehicle, and is intended for towing on paved road surfaces only.
It should not be used to pull a vehicle out of deep snow, mud, sand, etc.
Always observe all applicable towing laws and regulations.

Access to tow sockets

Front:
Use a screwdriver on the left or right side (arrows) to press the cover out.

Rear: Pull the cover off.

Screw the tow fittings in until they are tight. If you do not, the threads could be damaged.
Do not tow the vehicle by any components of the running gear, or lash them down in any way. If you do so, the components could be damaged, leading to possible accidents.◀

Use only a nylon towing strap to tow the vehicle, since the inherent resilience of this material helps protect both vehicles from sudden jerking movements.

Avoid "off-center" towing. Be sure that the tow rope is pulled tightly when the towing vehicle begins to move.◀

The towed vehicle should always be the lighter of the two vehicles. If this is not the case, it is no longer possible to control vehicle response.◀

Tow-starting

It is not possible to start the engine of a vehicle equipped with an automatic transmission by towing or pushing.

For instructions on jump starting refer to page 164.

Never attempt to use your vehicle to push another vehicle. If you do so, damage to the energy-absorbing bumpers could result.

CarManuals2.com

Towing a vehicle with automatic transmission

1. Place the selector lever in position N
2. Towing speed:
   Max. 45 mph (70 km/h)
3. Towing distance:
   Max. 95 miles (150 km)
4. Leave the ignition key at position 1 to ensure that the brake lamps, turn signals, horn and windshield wipers remain operative, and to prevent the steering lock from engaging
5. Switch on the hazard warning flashers (comply with country-specific regulations).

Find some means of identifying the vehicle in tow, for instance, place a sign or warning triangle in the rear window.

Make sure that the ignition key remains in position 1 even when the electrical system has failed. This will prevent the steering lock from engaging. The steering and brakes are without power assist when the engine is not running. This means that increased effort is required for steering and braking.◀

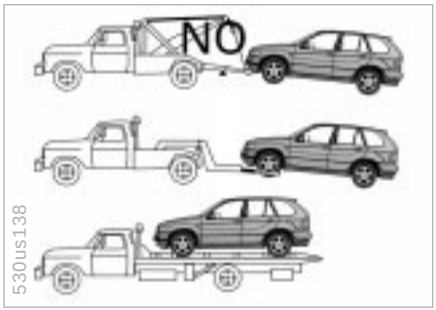

Towing with a commercial tow truck

▷ Do not tow with sling-type equipment
▷ Use a wheel-lift or flatbed carrier
▷ Please comply with applicable towing laws.

CarManuals2.com

Never allow passengers to ride in a towed vehicle for any reason.◀

Towing with a raised axle

1. Place the gearshift lever or selector lever in "Neutral"
2. Turn the ignition key to position 0 or take it out
3. Towing speed:
   Maximum 30 mph (50 km/h)
4. Towing distance:
   Maximum 95 miles (150 km).

Remove the rear driveshaft for longer towing distances with the front axle lifted; remove the front drive-shaft for towing over longer distances with the rear axle lifted. Failure to comply with this will result in damage to the transfer box.◀

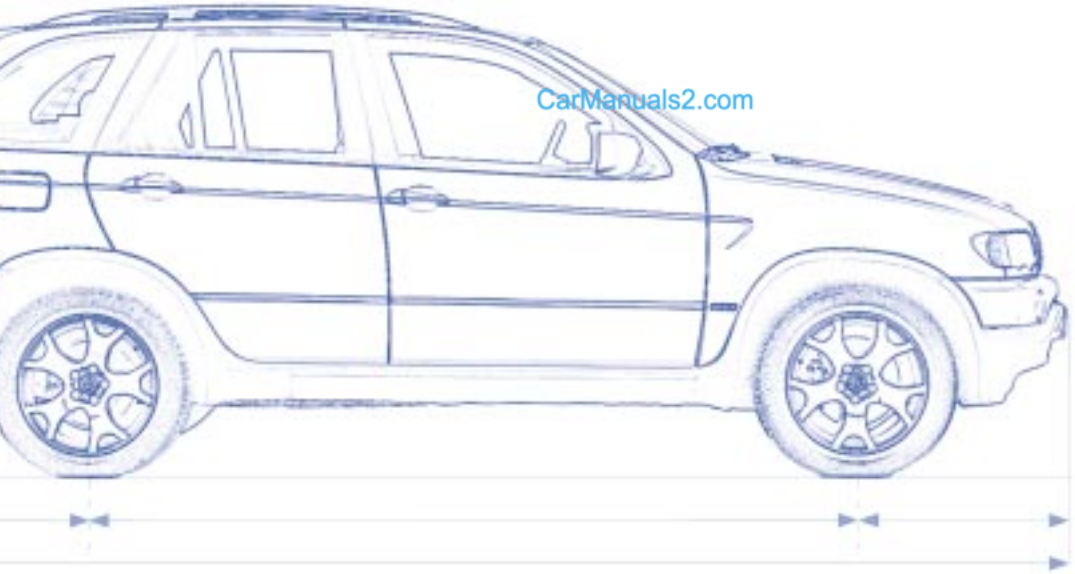

CarManuals2.com

CarManuals2.com

Overview

Controls and features

Operation, maintenance

Owner service procedures

Technical data

Index

Engine specifications

		BMW X5 3.0i	BMW X5 4.4i	BMW X5 4.6is
Displacement Number of cylinders	cu in (cm^3)	181.8 (2979) 6	268.4 (4398) 8	281.9 (4619) 8
Maximum output at engine speed	hp rpm	225 5900	290 5400	340 5700
Maximum torque at engine speed	lb-ft (Nm) rpm	214 (290) 3500	324 (440) 3600	350 (475) 3700
Compression ratio		10.2	10.0	10.5
Stroke Bore	in (mm) in (mm)	3.53 (89.6) 3.31 (84)	3.26 (82.7) 3.62 (92.0)	3.35 (85.0) 3.66 (93.0)
Fuel-injection system		Digital electronic engine-management system		

An engine performance test is authorized only on an appropriate chassis dynamometer.

CarManuals2.com

Dimensions

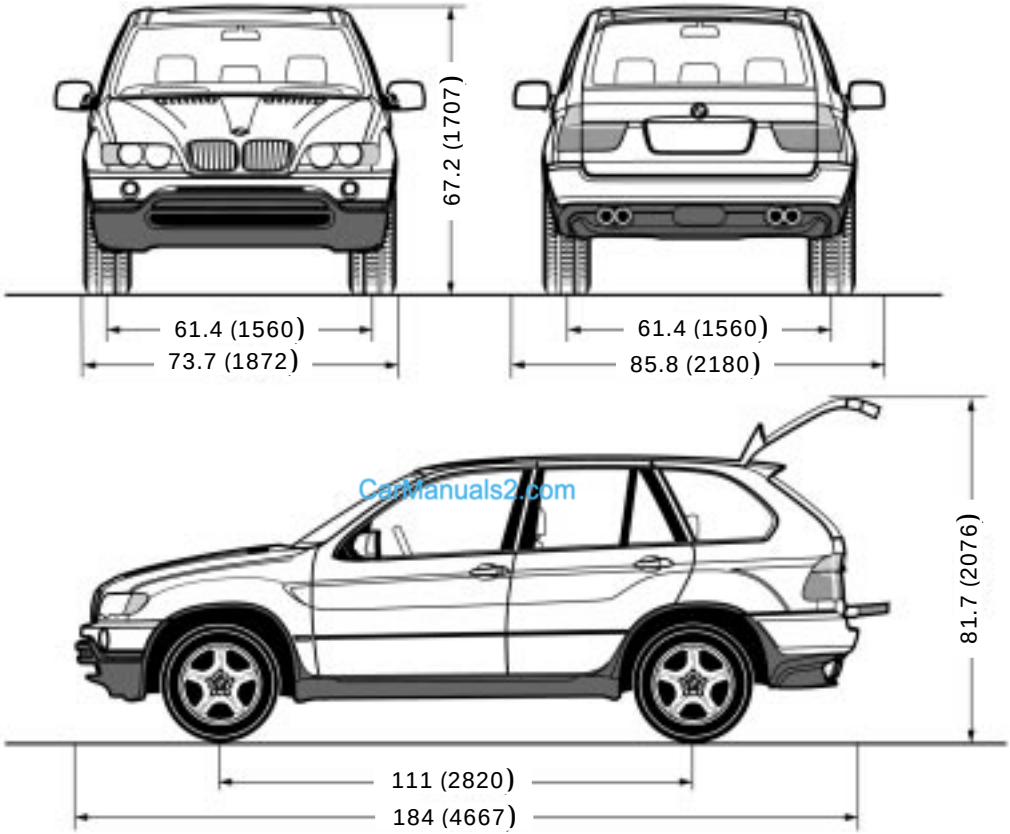

CarManuals2.com

530de210

All dimensions are given in inch (mm). Height: with Variable Ride Height: 67.2 (1,707); without Variable Ride Height: 67.5 (1,715). Height with roof-mounted luggage rack: with Variable Ride Height: 68.5 (1,740); without Variable Ride Height system: 68.8 (1,748). Track width X5 3.0i: 62.0 (1,576); X5 4.6is: front 61.7 (1,566), rear 62.8 (1,596). Min. turning circle dia.: 39.7 ft (12.1 meters)

Weights

		BMW X5 3.0i	BMW X5 4.4i	BMW X5 4.6is
Curb weight (with one person, ready for operation, full tank of fuel, options not included)				
with manual transmission	lbs (kg)	4533 (2056)	–	–
with automatic transmission	lbs (kg)	4586 (2080)	4824 (2188)	4824 (2188)
Approved gross vehicle weight				
with manual transmission	lbs (kg)	6005 (2724)	–	–
with automatic transmission	lbs (kg)	6005 (2724)	6005 (2724)	6005 (2724)
Approved front axle load	lbs (kg)	2787 (1264)	2787 (1264)	2787 (1264)
Approved rear axle load	lbs (kg)	3307 (1500)	3307 (1500)	3307 (1500)
Approved roof load capacity	lbs (kg)	220 (100)		
Never exceed either the approved axle loads or the gross vehicle weight.				
Cargo area capacity	cu ft (l)	16.4 – 54.4 (465 – 1540) – according to DIN 69.04 (1955) – according to SAE		

CarManuals2.com

			Notes
Fuel tank Reserve	gal. (liters) gal. (liters)	approx. 24.6 (approx. 93) approx. 2.0 (approx. 8) – BMW X5 3.0i approx. 2.5 (approx. 10) – BMW X5 4.4i, 4.6is	Fuel specification: page 25
Windshield washer system with headlamp washer system	quarts (liters)	approx. 8.2 (approx. 7.8)	For details: page 143
Cooling system including heater circuit	quarts (liters)	11.1 (10.5) – BMW X5 3.0i 13.7 (13.0) – BMW X5 4.4i, 4.6is	For details: page 145
Engine oil and filter change	quarts (liters)	8.0 (7.5) – BMW X5 3.0i 8.5 (8.0) – BMW X5 4.4i, 4.6is	"BMW High Performance Synthetic Oil" For details: page 144
Manual and automatic transmission, transfer box and differential	–	–	Lifetime fluid, no fluid change required

CarManuals2.com

CarManuals2.com

Online Edition for Part No. 01 41 0 156 416 - © 10/01 BMW AG

CarManuals2.com

Overview

Controls and features

Operation, maintenance

Owner service procedures

Technical data

Index

Everything from A to Z

A

ABS (Antilock Brake System) 19, 134
Accessories 10
Activated-charcoal filter 111
Adaptive brake light 99
Adding
  brake fluid 146
  coolant 145
  engine oil 143
  washer fluid 143
Adjusting
  head restraints 47
  mirrors 53
  seats 44
  steering wheel 52
  thigh support 45
Air conditioner 103
Air distribution 104, 108
Air outlets 103, 106
Air supply 104, 108
Airbags 19, 55
Alarm system 39
Antifreeze 145
Antilock Brake System (ABS) 19, 134
Anti-theft system 32
Approved gross vehicle weight 172
Aquaplaning 134, 136
Arrival time 88
Ashtray
  front 118
  rear 119
AUC (Automatic recirculated-air control) 109
Automatic climate control 106
  removing condensation from the windows 108
Automatic cruise control 71
Automatic curb monitor 51
Automatic dimming
  exterior rearview mirrors 54
  interior rearview mirror 54
Automatic headlight control 100
Automatic recirculated-air control (AUC) 109
Automatic steering wheel adjustment 52
Automatic transmission with Steptronic 66
Average fuel consumption 80
Average speed 80, 89
Avoiding unintentional alarms 40
Axle loads 172

B

Backup lamps 65
  bulb replacement 155
Battery 162
  charge 162
  discharged 164
Battery charge indicator lamp 18
Belts 49
Beverage holder 117
Blower 104, 108
BMW comfort seat 46
BMW High Performance Synthetic Oil 144
BMW Maintenance System 147
BMW sports seat 45
BMW Universal Transmitter 113
Brake fluid 146
Brake lamps
  bulb replacement 155
Brake light, adaptive 99
Brake system 135
  brake fluid 146
  brake fluid level 135
  brake pads indicator 20
  disc brakes 135
  hydraulic system indicator 18
  malfunctions 135
Break-in procedures 132
Bulbs and lamps 153

C

California Proposition 65 Warning 148
Can holder, refer to beverage holder 117
Capacities 173
Car care, refer to the "Caring for your vehicle" manual
Car wash systems, refer to the "Caring for your vehicle" manual
Care of upholstery materials, refer to the "Caring for your vehicle" manual
Cargo area 38, 122
  capacity 172
  cover 122
  lamps 102
Cargo floor, pull-out 126
Cargo loading 127
Cellular phone 117
Center (high-mount) brake lamp 156
Central locking system 30
  button 35
Changing a wheel 157
CHECK button 77

CarManuals2.com

Check Control 77
Check tire pressures 26
Checking
engine oil level 144
Child's seat 58
Child-restraint systems 58
Child-safety locks 60
Cigarette lighter
front 118
rear 119
socket 119
Clean the windshield 70
Climate control in the rear passenger area 110
Clock 83
refer also to the Owner's Manual for the Onboard Computer
Cockpit 14
Code 89
activating 89
deactivating 89
selecting 89
Comfort seat 46
Compartments 116
Computer 80, 82, 86
refer also to the Owner's Manual for the Onboard Computer
remote control 90
Configuring individual settings via Vehicle and Key Memory 61
Consumption, fuel 88
Convenience operation of windows and sliding/tilt sunroof 31
Convenience starting feature 63
Coolant 145
temperature gauge 76
Copyright notice 4
Correct sitting posture 44
seat adjustment 44
Cruise control 71
Cruising range 80, 88
Cup holder 117
Curb weight 172

D

Data link connector for On-board Diagnostics 149
Date
calling up 83
changing 83
refer also to the Owner's Manual for the Onboard Computer
Daytime driving lamp 100
DBC (Dynamic Brake Control) 20, 93
Deactivating the interior motion sensor 33, 40
Deep water 133
Defrosting the windows 105, 108
Digital clock 83
refer also to the Owner's Manual for the Onboard Computer
Dimensions 171
Dipstick, engine oil 144
Disc brakes 135
Displacement 170
Display lighting 101
Displays 15, 17
Disposal
used batteries 162
used oil 144
Distance from destination 87
Distance warning 91
Divided rear backrest 122
Door keys 30
Doors
manual operation 31
remote control 33
unlocking and locking 31
DOT Quality Grades 137
Drink holder, refer to beverage holder 117
Driving notes 134
Driving through water 133
Driving your BMW X5 133
DSC (Dynamic Stability Control) 20, 92
Dynamic Brake Control (DBC) 20, 93
Dynamic Stability Control (DSC) 20, 92

E

Electric power seat 46
Electric power windows 40
Electrical malfunction
liftgate 36
sliding/tilt sunroof 43
tailgate 38
Elements of operation 14
Emergency operation
doors 31
liftgate 36
sliding/tilt sunroof 43
tailgate 38
Energy Control 75
Engine
output 170
power rating 170
specifications 170
Engine compartment essentials 142
Engine coolant 145

CarManuals2.com

Engine oil 143, 144
consumption 143
grades 144
level 19
pressure 18
Estimated time of arrival 88
Exterior mirrors 53
Exterior rearview mirrors, automatic dimming feature 54

F
Failure of an electrical accessory 163
Filling the windshield washer reservoir 143
First-aid kit 23
Fittings, tow-starting and towing 166
Flashlight 116
Flat tire 99, 136, 157
Fog lamps 101
bulb replacement 155
Folding rear backrest 122
Footbrake 135
Front area lighting 102
Front fog lamps 101
Front seat adjustment 44
Frost protection, radiator 145
Fuel 25
capacity 173
display 75
gauge 75
quality 25
specifications 25
Fuel consumption 88
average 88
Fuel filler door 24
electrical malfunction 24
Fuses 163

G
Garage-door opener 113
Gasoline 25
General driving notes 134
Glasses compartment 118
Glove compartment 116
Gross vehicle weight 172
Ground clearance 133

H
Handbrake 64
Hands-free system 117
Hazard warning flashers 14
Hazard warning triangle 23
HDC (Hill Descent Control) 94
Head restraints 47
Headlamp covers, care 154
Headlamp flasher 69
Headlamp washer system 70, 143
Heated seats 51
Heated steering wheel 53
Heating and ventilation 103, 106
Heating while stopped 110
Heavy cargo 127
Height 171
Height adjustment
seats 46
steering wheel 52
High beams 21, 101
bulb replacement 153
High-mount brake lamp 156
Hill Descent Control (HDC) 94
Holder for cans, refer to beverage holder 117
Hood 141
Hood release 141
Hydraulic Brake Assistant refer to DBC 20

I
Ice warning 74
Identification, tires 139
Ignition key 30
Ignition lock 62
Imprint 4
Independent ventilation system 85, 112
switching on and off 85
Indicator lamps 18
Inflation pressures, tires 136
monitoring 98
INSPECTION 76
Instrument cluster 15, 17
Instrument lighting 101
Instrument panel 15, 17
Intensive cleaning system 70
Interior lamps 102
remote control 33
Interior mirror 54
Interior motion sensor 40
Interior rearview mirror, automatic dimming feature 54
Interlock 62
Intermittent wipe 69

CarManuals2.com

J
Jack 157, 158, 160
Jump-starting 164

K
Key Memory 61
Keys 30
Keys with radio remote control 30
Kickdown mode 67

L
Lamps and bulbs 153
Lashing eyes 38, 127
LATCH child-restraint system 60
Lead-free gasoline 25
Length 171
License plate lamps
bulb replacement 156
Liftgate 36
opening from the inside 36
radio control operation 33
release following an electrical malfunction 36, 38
Lighter 118
LIGHTS ON warning 100
Load-securing devices 127
Louvers 103, 106
Low beams 100
automatic 100
bulb replacement 153
Low-fuel warning lamp 75
Lug bolts 160
Lug wrench 157
Luggage net 38
Luggage straps 38
Lumbar support 46

M
M+S radial tires 140
Maintenance 76, 147
Maintenance System 147
Malfunction displays 77
Manual operation
doors 31
fuel filler door 24
liftgate 36
sliding/tilt sunroof 43
tailgate 38
Manual transmission 65
Master key 30
Maximum cooling 109
Mechanical seat 45
Memory 50
driver's seat 50
mirrors 50
steering wheel 50
Messages concerning system malfunctions 77
Microfilter 105, 111
MID (Multi-Information Display) 82
digital clock 83
Mirror defrosting 53
Mirror memory 50
Mirrors 53
Modifications, technical 10, 148
Monitoring inflation pressure, tires 98
Moonroof 42
Multifunction buttons, steering wheel 22
Multi-Information Display (MID) 82
digital clock 83

N
Navigation system, refer to the separate Owner's Manual

O
OBD interface socket 149
Odometer 74
Oil
additives 144
consumption 144
dipstick 144
grades 144
Oil change interval, refer to the Service and Warranty Information Booklet (US models) or to the Warranty and Service Guide Booklet (Canadian models)
Oil level 19
indicator lamp 19
Oil pressure, indicator lamp 18
OILSERVICE 76
Onboard computer, refer to the separate Owner's Manual
Onboard Diagnostic (OBD) system 149
Onboard tool kit 152
Opening and closing
from the inside 35
from the outside 31
using the key 31
using the remote control 32
Outlets, ventilation 103, 106
Outside temperature display 74
in the computer 80

CarManuals2.com

P

Park Distance Control (PDC) 91
Parking aid 91
Parking brake 19, 64
Parking lamps 100
Passenger side mirror tilt function 51
PDC (Park Distance Control) 91
"Please fasten safety belt" warning lamp 19
Poor driving conditions 133
Power loss
sliding/tilt sunroof 43
Power outlets
flashlight 125
other appliances 125
vacuum cleaner 125
Power rating 170
Power rear-seat backrests 48
Power windows 40
safety switch 41
Pull-out cargo floor 126

R

Rain sensor 69
RDC (Tire Pressure Monitor) 98
warning lamp 18, 20
Reading lamps 102
Rear backrests, folding down 122
Rear lamps 155
Rear passenger area climate control 110
Rear seats, power 48
Rear window defroster 104, 109
Rear window wiper 71
blade replacement 152
Rear-seat backrest, folding down 122
Rear-seat backrests, power 48
Rearview mirror 53
Rechargeable flashlight 116
Recirculated-air mode 104, 109
Reclining seat 44
Refueling 24, 183
Releasing
hood 141
tailgate following an electrical malfunction 38
Reminder signal (Memo) 84
Remote control 32
computer 90
Removal aid for the spare wheel 159
Removing condensation from the windows 105, 108
Replacing
antifreeze, radiator 145
bulbs 153
fuses 163
tires 137
windshield wiper blades 152
Reporting Safety Defects 11
Reservoir, washer system 143
Residual heat 107, 110
Restraint systems 58
Reverse 65
Rims 139
Roof load capacity 172
Roof-mounted luggage rack 128

S

Safety belts 49
height adjustment 49
Safety Defects, reporting 11
Safety lock buttons 35
Seat adjustment 44
Seat belts 49
Seat, electric power 46
Seat heating 51
Seat, mechanical 45
Seat memory 50
Seat, mirror and steering wheel memory 50
Securing cargo 38, 127
Selector lever, automatic transmission 66
Service and Warranty Information Booklet (US models) 147
Service Engine Soon indicator lamp 20
Service Interval Display 76, 147
Set temperature 108
Shiftlock 66
Shoulder support 47
Side airbags 55
Side Impact Head Protection System 55
Side lamps 100
bulb replacement 154
Sitting correctly 44
Ski bag 120
Sliding/tilt sunroof 42
closing following an electrical malfunction 43
convenience operation 31
power loss 43
remote control 33
Snow chains 140

CarManuals2.com

Socket
power supplies 119
vacuum cleaner 119
Spare key 30
Spare tire 158
Spare wheel 158
removal aid 159
Speaker 117
Special features of winter tires 140
Special wash program 70
Speed 89
Speed control 71
Speed limit 86, 87
Speedometer 15, 17
Sports seat 45
Standing lamps 101
Starting assistance 164
Starting
problems 63, 164
Starting the engine 62, 63
Steering wheel
adjustment 52
adjustment, automatic 52
heating 53
lock 62
memory 50
Steering wheel with multifunction buttons 22
Steptronic 66
Stopwatch 84
Storage compartments 116
in the cargo area 124
Summer tires 139
Sunroof 42
Sunshades 112
Switching off the engine 64
Switching off the vehicle 64
Switch-on times
input 85
Symbols 8
Synthetic oils 144
System malfunction indicators 77

T

Tachometer 75
Tail lamps 155
bulb replacement 155
Tailgate 37
opening from the outside 36
radio control operation 33
release following an electrical malfunction 38
Tank capacity 173
Technical modifications 10, 148
Telephone preparation 117
Temperature display, outside
temperature 74, 80
Temperature gauge 76
Temperature
layering 105, 110
Temperature setting 108
Thigh support
adjustment 45
Third brake lamp 156
Tilt alarm 33
Tilt alarm sensor 40
Tilt function, passenger side mirror 51
Time
calling up 83
changing 83
of arrival, estimated 88
Timer
refer to Stopwatch
refer also to the Owner's Manual for the Onboard Computer
Tire 136
damage 136
pressure monitoring 98
renewal 137
tread 136
Tire inflation
pressures 26, 136
monitoring 98
table 27
Tire Pressure Monitor (RDC) 98
warning lamp 18, 20
Tire Quality Grading 138
Tools 152
Torque 170
Tow fittings 166
Towing the vehicle 166
Tow-starting 166
Track width 171
Traction Control System, refer to DSC 92
Transmission 65, 66
Transporting children safely 58
Tread depth, tires 136
Trip odometer 74
Turn signal indicator 69
bulb replacement 154
Turning circle 171

U

Uniform Tire Quality Grading (UTQR) 138
Universal Transmitter 113
Used batteries, disposal 162
Used oil, disposal 144

CarManuals2.com

V

Vacuum cleaner
power outlet 125
socket 119
Valve caps 162
Variable Ride
Height 95, 133
inactive 95
Variable Ride Height on both
axles 95
display 96
lowering 97
raising 96
Vehicle battery 162
Vehicle jack 157
Vehicle keys 30
Vehicle Memory 61
Vehicle vacuum cleaner
power outlet 125
socket 119
Ventilation 103, 105, 110
draft-free 105, 110
in the rear 105, 110
while parked 112
Viscosity 144
Voice entry 22

W

Warm feet – cool head 105
Warning lamps 18
Warning messages 77
Warning triangle 23
Warranty and Service Guide
Booklet (Canadian
models) 147
Washer fluid 143
Washer reservoir,
filling 143
Washer/wiper system 69
Washing your vehicle, refer
to the "Caring for your
vehicle" manual
Weights 172
Wheel and tire
combinations 139
Wheelbase 171
Wheels and tires 139
Width 171
Windows 40
convenience operation 31
remote control 33
Windshield
intensive cleaning
program 69
special wash program 69
Windshield washer
filling reservoir 143
Windshield wiper 69
blade replacement 152
Winter tires 140
Wiper blade
replacement 152
Wipers 69
Work in the engine
compartment 141

X

Xenon lamps 154

CarManuals2.com

Refueling

BMW recommends Castrol

So that you will have important specifications available when you stop to refuel, we recommend that you supplement this table with data which apply to your vehicle.
Consult the index for individual specifications.

Fuel

CarManuals2.com

Designation	

Please enter your preferred fuel here.

Engine oil

Quality	

The oil volume between the two marks on the oil dipstick corresponds to approx. 1.1 US quarts (1 liter).

Tire inflation pressures	Summer		Winter	
	Front	Rear	Front	Rear
4 persons				
5 persons or 4 plus luggage				

More about BMW

bmwusa.com

The Ultimate
Driving Machine

01 41 0 156 416 ue

CarManuals2.com

Online Edition for Part No. 01 41 0 156 416 - © 10/01 BMW AG

X5 US-En

CarManuals2.com

Online Edition for Part No. 01 41 0 156 416 - © 10/01 BMW AG