GUIDE TO CONTENTS

1. MODELS COVERED & CHARACTERISTICS ····· 2～3
2. MARK & ABBREVIATION ····· 4～6
3. INDEX
    ILLUSTRATED INDEX ····· 7～14
    FIGURE NUMBER INDEX ····· 15～17
    PART NAME INDEX ····· 18～41
    PART NUMBER INDEX ····· 42～67
    REVISION REFERENCE CODE TABLE ····· 68
    EACH MONTH END PRODUCTION FRAME NO. LIST ····· 69
4. ILLUSTRATION & TEXT ····· 70～674
TOOL, ENGINE, FUEL, POWER TRAIN & CHASSIS, BODY, ELECTRICAL

MODELS COVERED & CHARACTERISTICS

MODELS COVERED & CHARACTERISTICS

Production Period	Model	Engine	Characteristics						
1111-1607	F650RV-GMDFJ	EJVE	VAN	LO	MTM	5F	RHD	WVVT	IDN
1111-1607	F650RV-GMRFJ	EJVE	VAN	STD	MTM	5F	RHD	WVVT	IDN
1111-1507	F651RV-GMDFJ	K3VE	VAN	LO	MTM	5F	RHD	WVVT	IDN
1111-1507	F651RV-GMRFJ	K3VE	VAN	STD	MTM	5F	RHD	WVVT	IDN
1111-1507	F651RV-GQDFJ	K3VE	VAN	LO	ATM	E4AT	RHD	WVVT	IDN
1507-	F653RV-GMDFJ	1NRVE	VAN	STD	MTM	5F	RHD	WVVT	IDN
1507-	F653RV-GMRFJ	1NRVE	VAN	LO	MTM	5F	RHD	WVVT	IDN
1507-	F653RV-GQDFJ	1NRVE	VAN	STD	ATM	E4AT	RHD	WVVT	IDN
1507-	F653RV-GQRFJ	1NRVE	VAN	LO	ATM	E4AT	RHD	WVVT	IDN
1901-	F654RV-GMDFJ	2NRVE	VAN	STD	MTM	5F	RHD	WVVT	IDN
1901-	F654RV-GQDFJ	2NRVE	VAN	STD	ATM	E4AT	RHD	WVVT	IDN

EJVE ····· EJ-EFI-DOHC-DVVT-Engine (1,000cc)
K3VE ····· K3-EFI-DOHC-DVVT-Engine (1,300cc)
1NRVE ····· NR-EFI-DOHC-DVVT-Engine (1,300cc)
2NRVE ····· NR-EFI-DOHC-DVVT-Engine (1,500cc)
VAN ····· Van
LO ····· Low grade
STD ····· Standard type
MTM ····· Manual transmission
ATM ····· Automatic transmission
5F ····· MTM. 5-speed floor shift
E4AT ····· 4-speed automatic transmission
RHD ····· Right-hand drive vehicle
WVVT ····· With VVT

MARK & ABBREVIATION LIST (1/3)

Mark	Definition	Mark	Definition	Mark	Definition	Mark	Definition
..	Among	AFT	After	CR-PLTD	Chrome Plated	F-	For
..+	Among	AI	Air Injection	CRPT	Carpet	FAB	Fabric
,	And	AISIN	Aishin Seiki Company	CST	Cassette	F-CONS	For Console
+	Plus	AKEBONO	Akebono Brake Industry Co., Ltd.	CTR	Center	F-FAB	Full Fabric
-	Except	AL	Aluminium	D	Daihatsu	FICB	Fast-Idle Cam Breaker
*	All Series	AM	AM Radio	DAIDO	Daido Metal Co., Ltd.	FIG	Figure Number
#	All Series	A/P	Air Pump	DC	Degree Centigrade	FIN	Finland
Ⓑ	Bolt	ARC	Arctic	D-CT	Direct Control	FL	Full
Ⓓ	Only for Domestic Vehicle	ARG	Argentina	DDK	Daihatsu Diesel Mfg. Co., Ltd.	FLCP	Floor Carpet
Ⓔ	For EU Market	A-RST	Arm Rest	DECS	Daihatsu Economical Clean-Up System	FLMT	Floor Mat
Ⓖ	For General Market	AS	Air Suction System	DENSO	Nippon Denso Co., Ltd.	FLO	Fuel Lid Opener
Ⓝ	Nut	ASB	Anti Spin Brake System	DF	Degree Fahrenheit	FR	Front
Ⓢ	Screw	AS-F	Asbestos-Free	DFG	Defogger	FREQ-CT	Frequency Control Shock Absorber
Ⓦ	Washer	ASH	Ash Tray	DIFF	Differential	FRN	France
&	And	ASSIST	Assistant	DISC	Disk Brake	F-TANK	Fuel Tank
1ST	First	ASSY	Assembly	DMP	Dump Series	FWH	Free Wheel Hub
2D	2 Door	ASV	Air Switching Valve	DOHC	Double Over Head Cam Shaft	G-BLT	Guard Belt
2FC	2 Speed Floor Automatic	A-TANK	Auxiliary Tank	D&P	Both Side (Driver & Passenger)	G-C	Gate Chain
2ND	Second	ATM	Automatic Transmission	DP	Dash Pot	GEN	For General Countries
2S	2 Seater	AUS	For Australia	DR	Door	G-FRM	Guard Frame
2WD	2 Wheel Drive	BC	Bucket	DRS	Daihatsu Racing Service	GG	Gage
33	Qty. as Required	BCS (BUKT)	Bucket Seat	DRUM	Drum Brake	G-PCK	Grade Package
3AT	3 Speed Automatic Transmission	BDO	Back Door Opener	D-SD	Driver Side	Gr	Grams
3D	3 Door	BLG	Belgium	D-SHAFT	Drive Shaft	GR	Gear Ratio
3FC	3 Speed Floor Automatic	BLK	Black	DSPV	Deceleration Sensing	GRN	Green
3RD	Third	BLT	Belt		Proportioning Valve	GS	Japan Storage Battery Co., Ltd.
3S	3 Seater	BMP	Bumper	DTM	Daimatic Transmission	H	High (Millimeter)
4AT	4 Speed Automatic Transmission	BOOS	Booster	DX	DX Grade	HAC	High Altitude Compensator
4ATE	Electronic 4 Speed Automatic	BS	Bridgestone Corp	DX-OPT	Deluxe Option	HIC	Hot Idle Compensator
	Transmission	B-SD	Both Sides	E-	Europe	HIR	High Roof
4D	4 Door	B.T.D.C	Before Top Dead Center	(E)	EC Certification	HK	Hong Kong
4F	4 Speed Floor Manual	BTR	Battery	E4AT	Electronic 4 Speed Automatic	H-L	Head Lamp
4H	4 Speed Column	BVSV	Bimetal Vacuum Switching Valve		Transmission	H-L-CNR	Head Lamp Cleaner
4S	4 Seater	B-VTL	Boost Ventilator	EB	Exhaust Brake	HLG	Halogen
4TH	Fourth	C/#	Chassis Number	EDIC	Electronic Diesel Injection Control	H-MT-B-LMP	High-mounted Brake Lamp
4WD	4 Wheel Drive	CA	Center Arm-rest	EGR	Exhaust Gas Recirculation System	HOUSEI	Advics Co., Ltd.
5D	5 Door	CC	Capacity or Engine Displacement	EGR-VM	Exhaust Gas Recirculation	H-PAD	Heal-pad
5F	5 Speed Floor Manual	C-CAP	Center Cap		Vacuum Modulator	H-R	Head restraint
5TH	Fifth	CCO	Catalitic Converter Oxidation	EIS	Vacuum Car	HR-SPR	Head-Restraint Separate Type
A	Ampere	CG-LT	Cigarette Lighter	EL	Electric	HSR	High and Sun Roof
AAB	Anti Afterburn	CH	Chile	ELCD	Evaporative Loss Control Device	HTR	Heater
AAP	Auxiliary Accelerating Pump	Ch.B	Choke Breaker	ELR	Emergency Locking Retractor	I-CL	Instrument Cluster
AB	Absorber	Ch.O	Choke Opener	E-M	Electro Magnetic	ID	Inside Diameter
A/B	Air Bag	CHUO	Chuo Seiki Co., Ltd.	ENG	England	IDNT	Identification
ABS	Anti-skid Braking System	CL	Clock	EPS	Electornic power steering	IKEDA	IKEDA Plant (DMC)
ABV	Air By-pass Valve	CLP	Collapsible Steering Column	ESS	Engine Speed Sensor	IKI	Ichikoh Industry Co., Ltd.
A-C	Air Conditioner	CM	Centimeter	ETR	Electronic tuning radio	IN	Inch
ACC	Accessory	CNG	Natural Gas	EUR	For Europe	IND	Indicator
ACL	Auto Clutch	CONR (CNR)	Corner	EXC	Except	INDN	Indonesia
A/D	Added	CONS	Console	EXPORT	Export Only	INN	Inner
ADR	Australian Design Rule	CONSTANT	Constant Gear Ratio Type	EXT	Extreme	INS	Insert

MARK & ABBREVIATION LIST (2/3)

Mark	Definition	Mark	Definition	Mark	Definition	Mark	Definition
INSTR	Instrument	NACHI	Fujikoshi Co., Ltd.	PTC	Power Take Off	SPD	Speed
INT-ARC	Intermit Arctic	NBK	Nisshin Brake Sales Co., Ltd.	P-VL	Printed Vinyl Leatherette	SPEC (SPC)	Specification
ISO	International Organization for Standardization	NDL	Needle	PV (P-VALVE)	Proportioning Valve	SPK	Speaker
		NGK	NGK Spark Plug Co., Ltd.	PW	Power Window	SPR	Separate
ITC	Impact Sensing Release System Controller	NHK	NHK Spring Co., Ltd.	QSI	Quick Start Igniter	SP-ST	Sparate Seat
		NIKKI	Nippon Carburetor Co., Ltd.	QTR	Quarter	SQ	Square
ITK	Intake	NL	Netherlands	QTY	Quantity	SR	Sport Bumper
JECO	Jeco Co., Ltd.	NO	Number	R	Resistance	S/S	Semi Size
JKC	Bosch Braking Systems Co., Ltd.	NOK	Nippon Oil Seal Industry Co., Ltd.	RBS	Recirculating Ball System	ST	Single Tire
KANBISHI	Kanbishi Corporation	N-P	Needle-punch	R/C	Release Cylinder	STBL	Stabilizer
K-FAB	Knit Fabric	N-PB	Non Protuberance	R-CT	Remote Control	STD	Standard
KIT	Kit Parts	NPR	Nippon Piston Ring Co., Ltd.	RD	Round	STL	Steel
KM/H	Kilometer an Hour	NR (NLR)	Non-Locking Retractor	RDO	Radio	STR	Standard Roof
KOBE	Shin Kobe Electric Machinery Co., Ltd.	NSK	Nippon Seiko co., Ltd.	RECL	Recliner	SUB ASSY	Sub Assembly
KOITO	Koito Manufacturing Co., Ltd.	NTBO	Non-turbo	REV	Reverse	SUMITOMO	Sumitomo Electric Industries, Ltd.
KOYO	Koyo Seiko Industry Co., Ltd.	NTN	NTN	REV.REF	Revision Reference	SUPPLY	Spare Parts Only
KW	Kilowatt	OD	Outside Diameter (Millimeter)	RH	Right Hand	SUSP (SUS)	Suspension
KYB	Kayaba Industry Co., Ltd.	OHTSU	The Ohtsu Tire & Rubber Co., Ltd.	RHD	Right Hand Drive	SW	Switch
KYOKUTO	Kyokuto Development Co., Ltd.	OLD	Discontinued Vehicles	R/M	Remarks	SWD	Sweden
L	Length (Millimeter)	OPT	Option	R-MLD	Roof Drip Moulding	SWTZ	Switzerland
L/	Less	O/S	Over Size	R-P	Rocker Panel	T	Thickness (Millimeter)
LH	Left Hand	P	Pitch	R&P	Rack and Pinion	TACHO	Tachometer
LHD	Left Hand Drive	PACK	Package	R/P	Replacement Parts	TAIHO	Taiho Kogyo Co., Ltd.
LMN	Laminated	P&B	Proportioning and By-pass Valve	RR	Rear	TBO	Turbo
LMP	Lamp	PCE	1 Piece	RSB	Roll Side Bar	T/C	Turbo Charger
LRG	Large	PCS	2 or More	R/T	Resin Top	TCS	Transmission Controlled Spark
LSD	Limited Slip Differential	PCV	Positive Crank-case Ventilation	RW	Rear Wiper	TEN	Fujitsu Ten Co., Ltd.
LSPV	Load Sensing Proportioning Valve	PD	Diameter of the pitch	S	Width (Millimeter)	TK	Toyoda Machine Works, Ltd.
LT	Leading Trailing Brake	PF □	Model Code of the Vehicle Discontinued Production as of YY/MM	S-	Semi	T/L	Tubeless Tire
LTHR	Leatherette			S.AFRICA	South Africa	TLT	Tilt
LTL	Long Taper Leaf Spring			SAKURA	Sakura Kogyo Co., Ltd.	T/M	Transmission
LWR	Lower	P-HOOK	Pintle Hook	S.ARB	Saudi Arabia	TMP	Temperature
-M	-Metallic	PKT	Pakistan	SB	Seat Back	TOKAIRIKA	Tokairika Electronics Maker Co.
M4AT	Mechanical 4 Speed Automatic Transmission	PL	Plastic	S/B	Sealed Beam	TOSHIBA	Toshiba Electronics Co.
		PLT	Plated	SCAB	Single Cab	TOYO	Toyo Tire & Rubber Co., Ltd.
MATSUSHITA	Matsushita Electric Ind. Co., Ltd.	P-M	Protection Moulding	SCHNOR (SCHN)	Schnorchel	TP	Throttle Positioner
MB	Metal Back	PNC	Part Name Code (Fig.no.+ Key No.)	SCV	Spark Control Valve	TPL-B	Tarpaulin Bow
M/C	Master Cylinder	PNCH	Punch	SD	Spark Delay	TR	Truck
MCL	Manual Clutch	PNT	Painted	SDX	SDX Grade	TRT	Turn
MCV	Mixture Control Valve	POST	Van for the Ministry of Posts and Telecommunications	SED	Sedan	TRP	Tropical
META	Metallic			SET	Set Parts	TSK	Nippon Cable System Inc.
M-HOLE	Mirror Hole	POT	Pocket	S-FAB	Semi-fabric	TTD	Tinted
MIN	Minimum	PP	Poly Propylen	SHIGA	SIGA Plant (DMC)	TVSV	Thermostatic Vacuum Switching Valve
MIX	Mixer Truck	PRMBLE	Permeable Foram	SHOWA	Showa Corp.		
ML	Mechanical	PRV-RUST	Prevent from Rust	SLD	Sealed	TYP	Type
MLY	Malaysia	PS	Power Steering	SMG	Speedometer Gear	UB	Utility Box
MM	Millimeter	PS □	Model Code of the Vehicle Production Started from YY/MM.	SML	Small	UPR	Upper
MPH (MILE/H)	Mile Per Hour			S-MTL	Silver Metallic	U/S	Under Size
MT-CT	Metallic Coat	P-SD	Passenger Side	SNGL	Single	V	Volts
MTG	Mounting	PSNG	Passenger	SNGP	Singapore	VAN	Van or Station Wagon Type
MTM	Manual Transmission	PT	Point(S)	SPCFY	For Specified Countries	VARIABLE	Variable Gear Ratio Type

MARK & ABBREVIATION LIST (3/3)

Mark	Definition	Mark	Definition	Mark	Definition	Mark	Definition
VCV	Vacuum Control Valve						
VISCOUS	Viscous Coupling System						
VL (V-LTHR)	Vinyl Leatherette						
VS	Vertical Stack						
VSV	Vacuum Switching Valve						
VTV	Vacuum Transmitting Valve						
W	Watts						
W/...	With						
W/C	Wheel Cylinder						
WCAB	Double Cab						
WD	Window						
WDN	Wooden						
WDS	Windshield						
W/E-MARK	With European Attested Mark						
WG	Wagon						
W.GRM (WG-)	West Germany						
WNG	Warning						
W-P	Water Proof						
WS	Double Spring						
WT	Double Tire						
W/T	Tube Tire						
WTW	Wall to Wall						
WV-FB	Woven Fabric						
YLW	Yellow						
YOKOHAMA	The Yokohama Rubber Co., Ltd.						
Z	Gear Number						
(¥)	Part supplied by two makers						

	Mark	Definition
R/P	* # . + =	Replacement (old) Replacement (new) Last replacement (new) New minor part number to be replaced along with main part Pat number to be replaced under some condition
QTY	33	Qty. as required
R/M	A K	Supply only during car producing Local procurement parts

ENGINE, FUEL GROUP (1/2) A10373	09-01 **STANDARD TOOL**	11-01 **PARTIAL ENGINE**	11-02 **SHORT BLOCK**	11-03 **OVERHAUL GASKET KIT**	11-04 **CYLINDER HEAD**
11-05 **CYLINDER BLOCK**	11-06 **TIMING CHAIN COVER**	11-07 **MOUNTING**	12-01 **VENTILATION HOSE**	13-01 **CRANKSHAFT & PISTON**	13-02 **CAMSHAFT & VALVE**
15-01 **OIL PUMP**	15-02 **OIL FILTER**	16-01 **WATER PUMP**	16-03 **RADIATOR & WATER OUTLET**	16-05 **V- BELT**	17-01 **MANIFOLD**
17-02 **EXHAUST PIPE**	17-03 **AIR CLEANER**	17-08 **VACUUM PIPING**	17-09 **CAUTION PLATE**	19-01 **IGNITION COIL & SPARK PLUG**	19-03 **ALTERNATOR**

ENGINE, FUEL GROUP (2/2) A20175	19-04 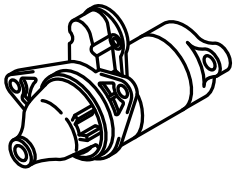 **STARTER**	22-11 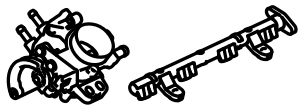 **FUEL INJECTION SYSTEM**			

(31-01) CLUTCH & RELEASE FORK	(31-02) CLUTCH PEDAL	(31-03) CLUTCH MASTER CYLINDER	(31-05) CLUTCH RELEASE CYLINDER	(33-01) TRANSAXLE ASSY (MTM)	(33-02) TRANSMISSION CASE (MTM)
(33-03) EXTENSION HOUSING (MTM)	(33-04) SPEEDOMETER DRIVEN GEAR (MTM)	(33-05) TRANSMISSION GEAR (MTM)	(33-07) GEAR SHIFT FORK & SHAFT (MTM)	(33-12) SHIFT LEVER & RETAINER	(35-01) TRANSAXLE ASSY (ATM)
(35-02) TORQUE CONVERTER (ATM)	(35-03) TRANSMISSION CASE (ATM)	(35-04) EXTENSION HOUSING (ATM)	(35-07) MULTIPLE DISC CLUTCH (ATM)	(35-09) BRAKE DISC (ATM)	(35-10) PLANETARY GEAR & REVERSE PISTON (ATM)
(35-12) VALVE BODY & OIL STRAINER (ATM)	(35-13) THROTTLE LINK (ATM)	(35-14) OIL COOLER & TUBE (ATM)	(37-01) PROPELLER SHAFT	(41-01) REAR AXLE HOUSING & DIFFERENTIAL	(41-02) REAR AXLE SHAFT & HUB

C10420-B

(41-03) DISC WHEEL	(43-03) FRONT AXLE HUB	(45-01) STEERING COLUMN & SHAFT	(45-04) STEERING WHEEL	(45-05) STEERING GEAR & LINK	(46-01) PARKING BRAKE & CABLE
(47-01) BRAKE PEDAL & BRACKET	(47-02) BRAKE MASTER CYLINDER	(47-03) BRAKE BOOSTER & VACUUM TUBE	(47-05) FRONT DISC BRAKE	(47-06) REAR DRUM BRAKE	(47-08) BRAKE TUBE
(48-02) FRONT AXLE ARM	(48-03) FRONT SPRING & SHOCK ABSORBER	(48-04) REAR SPRING & SHOCK ABSORBER			

C20161-B

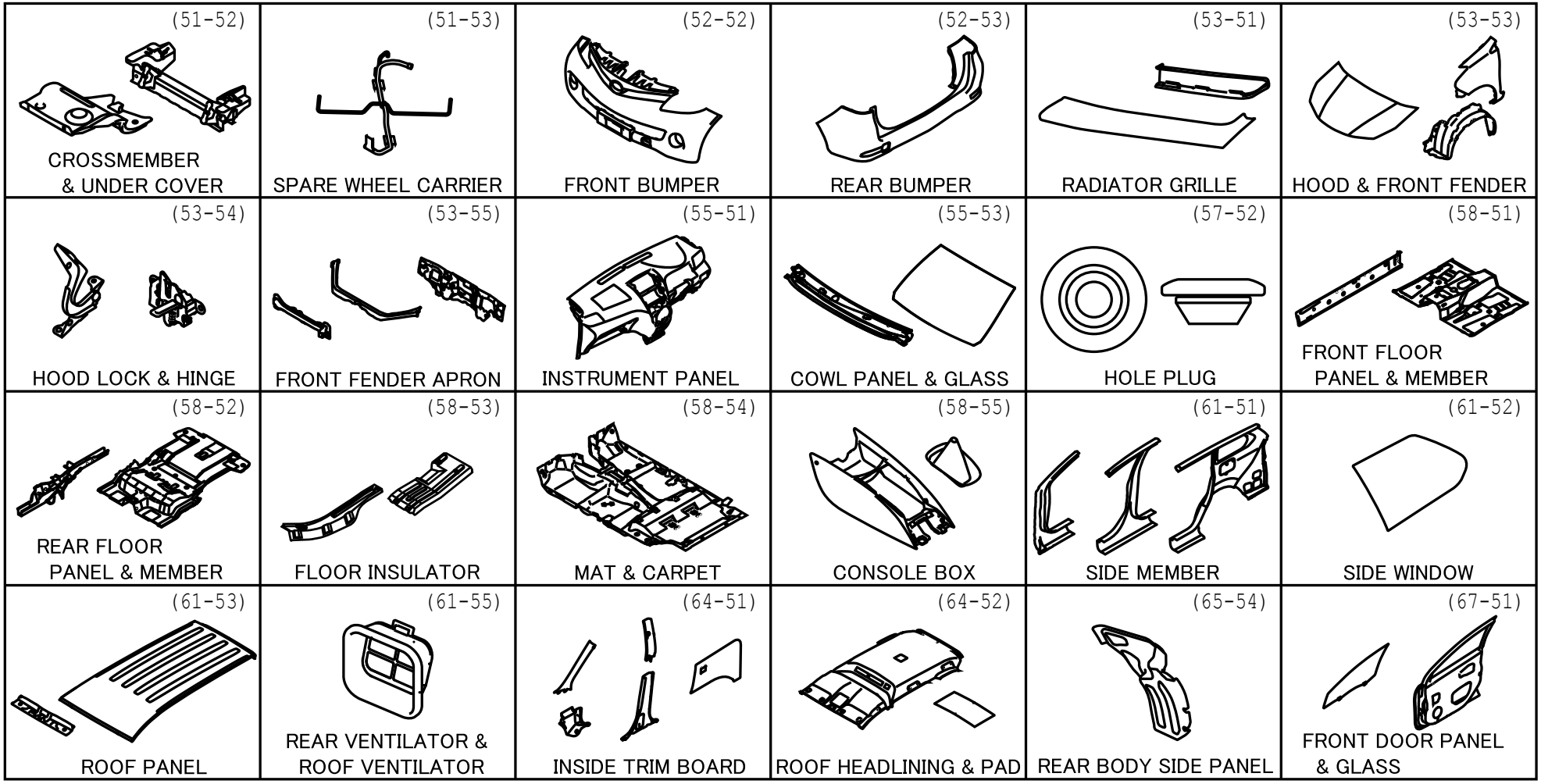
(51-52)
CROSSMEMBER & UNDER COVER
(51-53)
SPARE WHEEL CARRIER
(52-52)
FRONT BUMPER
(52-53)
REAR BUMPER
(53-51)
RADIATOR GRILLE
(53-53)
HOOD & FRONT FENDER
(53-54)
HOOD LOCK & HINGE
(53-55)
FRONT FENDER APRON
(55-51)
INSTRUMENT PANEL
(55-53)
COWL PANEL & GLASS
(57-52)
HOLE PLUG
(58-51)
FRONT FLOOR PANEL & MEMBER
(58-52)
REAR FLOOR PANEL & MEMBER
(58-53)
FLOOR INSULATOR
(58-54)
MAT & CARPET
(58-55)
CONSOLE BOX
(61-51)
SIDE MEMBER
(61-52)
SIDE WINDOW
(61-53)
ROOF PANEL
(61-55)
REAR VENTILATOR & ROOF VENTILATOR
(64-51)
INSIDE TRIM BOARD
(64-52)
ROOF HEADLINING & PAD
(65-54)
REAR BODY SIDE PANEL
(67-51)
FRONT DOOR PANEL & GLASS

B10564-B

(67-53) FRONT DOOR LOCK & HANDLE	(67-54) FRONT DOOR REGULATOR & HINGE	(67-55) REAR DOOR PANEL & GLASS	(67-56) REAR DOOR LOCK & HANDLE	(67-57) REAR DOOR REGULATOR & HINGE	(67-61) BACK DOOR PANEL & GLASS
(67-62) BACK DOOR LOCK & HANDLE	(67-65) LOCK CYLINDER SET	(71-51) SEAT & SEAT TRACK	(71-52) SEAT BELT	(74-51) ARMREST & VISOR	(74-54) BATTERY CARRIER
(74-55) CAUTION PLATE	(74-56) ASH RECEPTACLE	(75-51) EMBLEM & NAME PLATE	(75-52) MOULDING	(77-51) FUEL TANK	(78-51) ACCELERATOR LINK

B20560-B

(81-01) HEAD LAMP	(81-02) FOG LAMP	(81-11) REAR COMBINATION LAMP	(81-13) REAR LICENSE PLATE LAMP	(81-15) REFLEX REFLECTOR	(81-21) INTERIOR LAMP
(82-01) BATTERY & BATTERY CABLE	(82-02) WIRING & CLAMP	(83-01) METER	(84-01) SWITCH & RELAY	(84-04) EFI SYSTEM	(84-10) OVERDRIVE & ECT
(84-14) ABS & VSC	(84-20) WIRELESS DOOR LOCK	(84-21) AIR BAG	(84-24) ANTI-THEFT DEVICE	(85-01) WINDSHIELD WIPER	(85-02) REAR WIPER
(85-03) WINDSHIELD WASHER	(85-04) REAR WASHER	(86-01) RADIO & RECEIVER & CONDENSER	(86-02) SPEAKER	(86-04) ANTENNA	(86-11) HORN

E10522-E

(87-01) 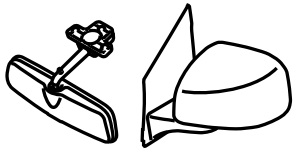 MIRROR	(87-14) 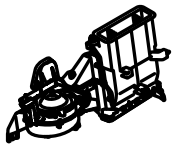 AIR CONDITIONER - COOLER UNIT	(87-15) AIR CONDITIONER - CONTROL & AIR DUCT	(87-18) 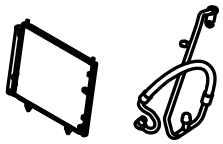 AIR CONDITIONER - COOLER PIPING	(87-19) AIR CONDITIONER - COMPRESSOR	

E20231-B

FIGURE NUMBER INDEX

PAGE	FIG. NO.	TITLE
		TOOL GROUP
70	09-01	STANDARD TOOL
		ENGINE GROUP
73	11-01	PARTIAL ENGINE ASSEMBLY
74	11-02	SHORT BLOCK ASSEMBLY
76	11-03	ENGINE OVERHAUL GASKET KIT
80	11-04	CYLINDER HEAD
91	11-05	CYLINDER BLOCK
100	11-06	TIMING GEAR COVER & REAR END PLATE
103	11-07	MOUNTING
106	12-01	VENTILATION HOSE
109	13-01	CRANKSHAFT & PISTON
115	13-02	CAMSHAFT & VALVE
123	15-01	ENGINE OIL PUMP
126	15-02	OIL FILTER
129	16-01	WATER PUMP
133	16-03	RADIATOR & WATER OUTLET
149	16-05	V-BELT
150	17-01	MANIFOLD
155	17-02	EXHAUST PIPE
161	17-03	AIR CLEANER
165	17-08	VACUUM PIPING
169	17-09	CAUTION PLATE & NAME PLATE (ENGINE)
170	19-01	IGNITION COIL & SPARK PLUG / GLOW PLUG
173	19-03	ALTERNATOR
178	19-04	STARTER
		FUEL GROUP
185	22-11	FUEL INJECTION SYSTEM
		POWER TRAIN & CHASSIS GROUP
191	31-01	CLUTCH & RELEASE FORK
194	31-02	CLUTCH PEDAL & FLEXIBLE HOSE
199	31-03	CLUTCH MASTER CYLINDER
200	31-05	CLUTCH RELEASE CYLINDER
201	33-01	TRANSAXLE OR TRANSMISSION ASSY & GASKET KIT (MTM)
203	33-02	CLUTCH HOUSING & TRANSMISSION CASE (MTM)
210	33-03	EXTENSION HOUSING (MTM)
212	33-04	SPEEDOMETER DRIVEN GEAR (MTM)
213	33-05	TRANSMISSION GEAR (MTM)
225	33-07	GEAR SHIFT FORK & LEVER SHAFT (MTM)
232	33-12	SHIFT LEVER & RETAINER
237	35-01	TRANSAXLE OR TRANSMISSION ASSY & GASKET KIT (ATM)
238	35-02	TORQUE CONVERTER, FRONT OIL PUMP & CHAIN (ATM)
241	35-03	TRANSMISSION CASE & OIL PAN (ATM)
247	35-04	EXTENSION HOUSING (ATM)
249	35-07	BRAKE BAND & MULTIPLE DISC CLUTCH (ATM)
254	35-09	BRAKE NO.3, 1ST & REVERSE BRAKE (ATM)
256	35-10	PLANETARY GEAR, REVERSE PISTON & COUNTER GEAR(ATM)
259	35-12	VALVE BODY & OIL STRAINER (ATM)
262	35-13	THROTTLE LINK & VALVE LEVER (ATM)
265	35-14	OIL COOLER & TUBE (ATM)
267	37-01	PROPELLER SHAFT & UNIVERSAL JOINT
270	41-01	REAR AXLE HOUSING & DIFFERENTIAL
281	41-02	REAR AXLE SHAFT & HUB
283	41-03	DISC WHEEL & WHEEL CAP
286	43-03	FRONT AXLE HUB
288	45-01	STEERING COLUMN & SHAFT
290	45-04	STEERING WHEEL
292	45-05	FRONT STEERING GEAR & LINK
294	46-01	PARKING BRAKE & CABLE
298	47-01	BRAKE PEDAL & BRACKET
301	47-02	BRAKE MASTER CYLINDER
303	47-03	BRAKE BOOSTER & VACUUM TUBE
306	47-05	FRONT DISC BRAKE CALIPER & DUST COVER
310	47-06	REAR DRUM BRAKE WHEEL CYLINDER & BACKING PLATE
314	47-08	BRAKE TUBE & CLAMP
321	48-02	FRONT AXLE ARM & STEERING KNUCKLE
324	48-03	FRONT SPRING & SHOCK ABSORBER
329	48-04	REAR SPRING & SHOCK ABSORBER

FIGURE NUMBER INDEX

PAGE	FIG. NO.	TITLE
	BODY GROUP	
335	51-52	SUSPENSION CROSSMEMBER & UNDER COVER
340	51-53	SPARE WHEEL CARRIER
341	52-52	FRONT BUMPER & BUMPER STAY
344	52-53	REAR BUMPER & BUMPER STAY
348	53-51	RADIATOR GRILLE
351	53-53	HOOD & FRONT FENDER
354	53-54	HOOD LOCK & HINGE
357	53-55	FRONT FENDER APRON & DASH PANEL
366	55-51	INSTRUMENT PANEL & GLOVE COMPARTMENT
380	55-53	COWL PANEL & WINDSHIELD GLASS
383	57-52	HOLE PLUG
385	58-51	FRONT FLOOR PANEL & FRONT FLOOR MEMBER
393	58-52	REAR FLOOR PANEL & REAR FLOOR MEMBER
399	58-53	FLOOR INSULATOR
400	58-54	FLOOR MAT & SILENCER PAD
406	58-55	CONSOLE BOX & BRACKET
410	61-51	SIDE MEMBER
421	61-52	SIDE WINDOW
423	61-53	ROOF PANEL & BACK PANEL
425	61-55	REAR VENTILATOR & ROOF VENTILATOR
426	64-51	INSIDE TRIM BOARD
433	64-52	ROOF HEADLINING & SILENCER PAD
436	65-54	REAR BODY SIDE PANEL
437	67-51	FRONT DOOR PANEL & GLASS
444	67-53	FRONT DOOR LOCK & HANDLE
448	67-54	FRONT DOOR WINDOW REGULATOR & HINGE
450	67-55	REAR DOOR PANEL & GLASS
457	67-56	REAR DOOR LOCK & HANDLE
461	67-57	REAR DOOR WINDOW REGULATOR & HINGE
463	67-61	BACK DOOR PANEL & GLASS
472	67-62	BACK DOOR LOCK & HINGE
474	67-65	LOCK CYLINDER SET
480	71-51	SEAT & SEAT TRACK
520	71-52	SEAT BELT
527	74-51	ARMREST & VISOR
530	74-54	BATTERY CARRIER
532	74-55	CAUTION PLATE
534	74-56	ASH RECEPTACLE
535	75-51	EMBLEM & NAME PLATE
537	75-52	MOULDING
539	77-51	FUEL TANK & TUBE
551	78-51	ACCELERATOR LINK
	ELECTRICAL GROUP	
553	81-01	HEADLAMP
558	81-02	FOG LAMP
559	81-11	REAR COMBINATION LAMP
562	81-13	REAR LICENSE PLATE LAMP
563	81-15	REFLEX REFLECTOR
564	81-21	INTERIOR LAMP
566	82-01	BATTERY & BATTERY CABLE
567	82-02	WIRING & CLAMP
585	83-01	METER
586	84-01	SWITCH & RELAY & COMPUTER
609	84-04	ELECTRONIC FUEL INJECTION SYSTEM
611	84-10	OVERDRIVE & ELECTRONIC CONTROLLED TRANSM ISSION
612	84-14	ABS & VSC
614	84-20	WIRELESS DOOR LOCK
615	84-21	AIR BAG
618	84-24	ANTI-THEFT DEVICE
619	85-01	WINDSHIELD WIPER
622	85-02	REAR WIPER
624	85-03	WINDSHIELD WASHER
627	85-04	REAR WASHER
631	86-01	RADIO RECEIVER & AMPLIFIER & CONDENSER
633	86-02	SPEAKER
634	86-04	ANTENNA
637	86-11	HORN
638	87-01	MIRROR
643	87-14	HEATING & AIR CONDITIONING - COOLER UNIT
658	87-15	HEATING & AIR CONDITIONING - CONTROL & A IR DUCT
664	87-18	HEATING & AIR CONDITIONING - COOLER PIPI NG

FIGURE NUMBER INDEX

PAGE	FIG. NO.	TITLE	PAGE	FIG. NO.	TITLE	PAGE	FIG. NO.	TITLE
671	87-19	HEATING & AIR CONDITIONING - COMPRESSOR						

PART NAME INDEX

ABSORBER	-	BEARING	18
BEARING	-	BOLT(FOR	19
BOLT(FOR	-	BRACKET,	20
BRACKET,	-	BUSH,	21
BUSH,	-	CLAMP,	22
CLAMP,	-	CLIP(FOR	23
CLIP(FOR	-	COVER,	24
COVER,	-	CUSHION,	25
CUSHION,	-	FORK,	26
FORK,	-	GEAR	27
GEAR	-	HEADLAMP	28
HEADLINING	-	HOUSING	29
HOUSING	-	LEVER	30
LEVER	-	MOUNTING,	31
MOUNTING,	-	PANEL	32
PANEL	-	PIPE,	33
PIPE,	-	PLUG,	34
PLUG,	-	REINFORCEMENT,	35
REINFORCEMENT,	-	RING,	36
RING,	-	SEAT,	37
SEAT,	-	SPRING	38
SPRING	-	SWITCH	39
SWITCH,	-	VISOR	40
VISOR	-	YOKE,	41

PART NAME	PAGE
ABSORBER ASSY, SHOCK, FRONT LH	326
ABSORBER ASSY, SHOCK, FRONT RH	325
ABSORBER ASSY, SHOCK, REAR LH	331
ABSORBER ASSY, SHOCK, REAR RH	330
ABSORBER, INNER REAR VIEW MIRROR	641
ACTUATOR ASSY, BRAKE	317
ACTUATOR ASSY, IDLE SPEED CONTROL	190
ADJUSTER ASSY, VALVE LASH	119
ADJUSTER, STOP LAMP SWITCH MOUNTING	604
ADJUSTER, STOP LAMP SWITCH MOUNTING	605
AIR BAG ASSY, INSTRUMENT PANEL PASSENGER	379
ALTERNATOR ASSY	176
ANTENNA ASSY, AMPLIFIER, NO.1	636
ANTENNA ASSY, W/HOLDER	636
APRON SUB-ASSY, FRONT FENDER, LH	362
APRON SUB-ASSY, FRONT FENDER, RH	362
APRON, FENDER SIDE, RH	362
APRON, FENDER SIDE, RH	363
APRON, FRONT FENDER NO.2 SIDE, LH	363
APRON, FRONT FENDER NO.2 SIDE, RH	363
APRON, FRONT FENDER, FRONT LH	362
APRON, FRONT FENDER, FRONT RH	362
APRON, FRONT FENDER, REAR LH	362
ARM ASSY, LOWER CONTROL, LH	332
ARM ASSY, LOWER CONTROL, RH	331
ARM ASSY, LOWER CONTROL, RH	332
ARM ASSY, UPPER CONTROL, REAR LH	334
ARM ASSY, UPPER CONTROL, REAR RH	333
ARM SUB-ASSY, FRONT SUSPENSION, LOWER NO.1 LH	322
ARM SUB-ASSY, FRONT SUSPENSION, LOWER NO.1 RH	322
ARM SUB-ASSY, VALVE ROCKER, NO.1	121
ARM, FRONT BUMPER, INNER LH	343
ARM, FRONT BUMPER, INNER RH	343
ARM, FRONT WIPER, LH	620
ARM, FRONT WIPER, RH	620
ARM, REAR WIPER	623
ARM, REVERSE SHIFT	227
ARM, TIMING CHAIN TENSION	118
ARMATURE ASSY, STARTER	183
ATTACHMENT, COMPRESSOR	674
BALL BEARING, OUTPUT SHAFT	257
BALL, SHAFT DETENT	230
BAND, REAR SEAT CUSHION	504
BAND, TOOL BAG	71
BAR, FAN BELT ADJUSTING	145
BAR, STABILIZER, FRONT	327
BASE, GRILLE	435
BASE, RADIATOR GRILLE EMBLEM	535
BASE, SWITCH	606
BEARING (FOR FRONT AXLE HUB LH)	287

PART NAME	PAGE
BEARING (FOR FRONT AXLE HUB RH)	287
BEARING (FOR INPUT SHAFT FRONT)	215
BEARING (FOR OUTPUT SHAFT CENTER)	217
BEARING (FOR OUTPUT SHAFT FRONT)	217
BEARING (FOR OUTPUT SHAFT REAR)	216
BEARING (FOR REAR AXLE SHAFT)	281
BEARING (FOR REAR DRIVE PINION FRONT)	273
BEARING (FOR REAR DRIVE PINION REAR)	273
BEARING ASSY, CENTER SUPPORT, NO.1	268
BEARING ASSY, CLUTCH RELEASE	192
BEARING SET, CONNECTING ROD	112
BEARING SET, CRANKSHAFT	110
BEARING(FOR ALTERNATOR DRIVE END FRAME)	176
BEARING(FOR ALTERNATOR ROTOR)	176
BEARING(FOR REAR DIFFERENTIAL CASE)	277
BEARING(FOR STARTER HOUSING)	182
BEARING, CONNECTING ROD	111
BEARING, CRANKSHAFT	110
BEARING, CRANKSHAFT	111
BEARING, FRONT CLUTCH THRUST	252
BEARING, INPUT SHAFT	216
BEARING, NEEDLE ROLLER (FOR 2ND GEAR)	219
BEARING, NEEDLE ROLLER (FOR 3RD GEAR)	219
BEARING, NEEDLE ROLLER(FOR 1ST GEAR)	221
BEARING, NEEDLE ROLLER(FOR INTERMEDIATE SHAFT)	257
BEARING, RADIAL BALL(FOR COUNTER GEAR REAR)	224
BEARING, RADIAL BOLL	257
BEARING, STARTER CENTER & SHOCK ABSORBER, NO.1	182
BEARING, STARTER FLANGE	182
BEARING, THRUST NEEDLE ROLLER (FOR FRONT PLANETARY GEAR)	257
BEARING, THRUST NEEDLE ROLLER (FOR INTERMEDIATE SHAFT)	257
BELT ASSY, FRONT SEAT INNER, LH	523
BELT ASSY, FRONT SEAT INNER, LH	524
BELT ASSY, FRONT SEAT INNER, RH	523
BELT ASSY, FRONT SEAT OUTER, LH	523
BELT ASSY, FRONT SEAT OUTER, RH	523
BELT ASSY, REAR NO.1 SEAT, OUTER LH	524
BELT ASSY, REAR NO.1 SEAT, OUTER LH	525
BELT ASSY, REAR NO.1 SEAT, OUTER RH	524
BELT ASSY, REAR NO.2 SEAT LAP TYPE, LH	525
BELT ASSY, REAR NO.2 SEAT LAP TYPE, RH	525
BELT ASSY, REAR NO.2 SEAT, OUTER LH	525
BELT ASSY, REAR NO.2 SEAT, OUTER LH	526
BELT ASSY, REAR NO.2 SEAT, OUTER RH	525
BELT ASSY, REAR SEAT LAP TYPE, CENTER	524
BELT ASSY, REAR SEAT LAP TYPE, CENTER LH	524
BELT ASSY, REAR SEAT LAP TYPE, CENTER RH	524
BELT, TIMING	117
BELT, V (COOLER COMPRESSOR TO CRANKSHAFT PULLEY), NO.1	149
BELT, V(FOR FAN & ALTERNATOR)	149

PART NAME	PAGE
BEZEL, SHIFTING HOLE	409
BLADE, FR WIPER, LH	620
BLADE, FR WIPER, RH	620
BLADE, RR WIPER	623
BLOCK ASSY, FUSE	602
BLOCK ASSY, SHORT	75
BLOCK SUB-ASSY, CYLINDER	97
BOARD SUB-ASSY, FRONT DOOR TRIM, LH	439
BOARD SUB-ASSY, FRONT DOOR TRIM, LH	440
BOARD SUB-ASSY, FRONT DOOR TRIM, RH	439
BOARD SUB-ASSY, REAR DOOR TRIM, LH	453
BOARD SUB-ASSY, REAR DOOR TRIM, RH	452
BOARD SUB-ASSY, REAR DOOR TRIM, RH	453
BOARD, COWL SIDE TRIM, LH	428
BOARD, COWL SIDE TRIM, RH	428
BODY ASSY, THROTTLE	188
BODY ASSY, THROTTLE W/THROTTLE POSITION SENSOR	188
BODY ASSY, TRANSMISSION VALVE	261
BODY SUB-ASSY, FRONT OIL PUMP	239
BOLT	545
BOLT (FOR AUTOMATIC TRANSMISSION OIL PAN)	245
BOLT (FOR CONTROL SHAFT COVER)	230
BOLT (FOR FRONT OIL PUMP SETTING)	239
BOLT (FOR PAWL STOPPER PLATE)	264
BOLT (FOR PROPELLER SHAFT)	268
BOLT (FOR REAR DIFFERENTIAL CARRIER)	272
BOLT (FOR STEERING KNUCKLE LH)	322
BOLT (FOR STEERING KNUCKLE RH)	321
BOLT (FOR TRANSAXLE CASE)	245
BOLT (FOR TRANSMISSION CONTROL CABLE BRACKET)	236
BOLT(FOR BACKING PLATE TO REAR AXLE HOUSING SETTING)	311
BOLT(FOR BACKING PLATE TO REAR AXLE HOUSING SETTING)	312
BOLT(FOR CAMSHAFT HOUSING SET)	87
BOLT(FOR CLUTCH MASTER CYLINDER SETTING)	199
BOLT(FOR CLUTCH PEDAL STOPPER)	196
BOLT(FOR CLUTCH PEDAL STOPPER)	197
BOLT(FOR COOLER EXPANSION VALVE)	654
BOLT(FOR CRANKSHAFT BEARING CAP SET)	97
BOLT(FOR CRANKSHAFT PULLEY SET)	113
BOLT(FOR CYLINDER HEAD COVER)	89
BOLT(FOR CYLINDER HEAD SET SUB)	86
BOLT(FOR CYLINDER HEAD SET)	86
BOLT(FOR DRIVE PLATE & TORQUE CONVERTER SETTING)	239
BOLT(FOR FLYWHEEL)	113
BOLT(FOR FRONT DISC BRAKE CYLINDER SLIDE)	307
BOLT(FOR FRONT STABILIZER)	327
BOLT(FOR FRONT SUSPENSION LOWER ARM NO.1 LH)	323
BOLT(FOR FRONT SUSPENSION LOWER ARM NO.1 RH)	322
BOLT(FOR FRONT SUSPENSION LOWER ARM NO.2 LH)	323
BOLT(FOR FRONT SUSPENSION LOWER ARM NO.2 RH)	322

PART NAME	PAGE
BOLT(FOR HEAD TO CAMSHAFT BEARING CAP)	88
BOLT(FOR HEAD TO CAMSHAFT BEARING CAP)	88
BOLT(FOR LOWER CONTROL ARM)	332
BOLT(FOR MANUAL DETENT SPRING)	263
BOLT(FOR REAR LOWER CONTROL ARM)	331
BOLT(FOR REAR UPPER CONTROL ARM LH)	334
BOLT(FOR REAR UPPER CONTROL ARM RH)	333
BOLT(FOR REAR UPPER CONTROL ARM)	333
BOLT(FOR REVERSE SHIFT HEAD)	228
BOLT(FOR SPARE WHEEL CARRIER LOCK)	340
BOLT(FOR WATER PUMP COVER)	132
BOLT, BACK DOOR STAY	473
BOLT, BATTERY CLAMP	531
BOLT, BRAKE ACTUATOR BRACKET	317
BOLT, BRAKE PEDAL STOP, NO.1	299
BOLT, CENTER SUPPORT BEARING BRACKET	268
BOLT, COMPRESSOR, NO.1	672
BOLT, COMPRESSOR, NO.1	673
BOLT, COMPRESSOR, NO.2	673
BOLT, COMPRESSOR, NO.3	673
BOLT, COMPRESSOR, NO.4	673
BOLT, CONNECTING ROD	112
BOLT, EXHAUST PIPE SUPPORT	160
BOLT, FILTER	128
BOLT, FRONT STABILIZER	327
BOLT, FRONT SUSPENSION MEMBER MOUNTING	338
BOLT, FRONT SUSPENSION MEMBER MOUNTING	338
BOLT, FUEL TANK	550
BOLT, HEXAGON(FOR DRIVE PLATE SETTING)	239
BOLT, HEXAGON(FOR FRONT DISC BRAKE CALIPER)	307
BOLT, HEXAGON(FOR LATERAL CONTROL ROD)	332
BOLT, HEXAGON(FOR LATERAL CONTROL ROD)	333
BOLT, HOOD LOCK	355
BOLT, HOUSING SET	182
BOLT, HUB (FOR FRONT AXLE LH)	286
BOLT, HUB (FOR FRONT AXLE RH)	286
BOLT, HUB (FOR REAR AXLE)	282
BOLT, INSTRUMENT PANEL	374
BOLT, MAGNET CLUTCH SETTING	674
BOLT, NO.1 (FOR PROPELLER SHAFT & DIFFERENTIAL SETTING)	267
BOLT, OIL NOZZLE UNION	99
BOLT, REAR DIFFERENTIAL BEARING CAP	272
BOLT, REAR SEAT HINGE	504
BOLT, ROUND HEAD SQUARE NECK(FOR FRONT BUMPER)	342
BOLT, ROUND HEAD SQUARE NECK(FOR REAR BUMPER)	346
BOLT, SHIFT LEVER	235
BOLT, SHIFT LEVER HOUSING SET	234
BOLT, STARTER	183
BOLT, STEERING LOCK SET	289
BOLT, STUD	153

PART NAME	PAGE
BOLT, STUD(FOR EXHAUST MANIFOLD TO CYLINDER HEAD)	153
BOLT, STUD(FOR INTAKE MANIFOLD TO CYLINDER HEAD)	153
BOLT, THROUGH	672
BOLT, UNION(FOR FRONT FLEXIBLE HOSE)	318
BOLT, UNION(FOR OIL COOLER)	266
BOLT, UNION(FOR OIL FILTER BRACKET)	127
BOLT, UNION(FOR REAR SHOCK ABSORBER LH)	331
BOLT, UNION(FOR REAR SHOCK ABSORBER RH)	330
BOLT, UNION(FOR REAR SHOCK ABSORBER RH)	331
BOLT, W/WASHER (FOR FLOOR SHIFT)	235
BOLT, WASHER BASED HEAD HEXAGON	229
BOLT,STUD(FOR OIL PUMP)	124
BOOSTER ASSY, BRAKE	304
BOOT, BUSH DUST(FOR FRONT DISC BRAKE)	308
BOOT, CLUTCH RELEASE FORK	192
BOOT, CONTROL SHAFT DUST	230
BOOT, FRONT DISC BRAKE CYLINDER	308
BOOT, STEERING RACK, NO.1	293
BOX ASSY, CONSOLE, REAR	409
BOX SUB-ASSY, CONSOLE, REAR	409
BOX SUB-ASSY, FRONT ASH RECEPTACLE	534
BOX, CONSOLE CUP HOLDER	408
BOX, FUEL INLET	418
BOX, REAR CONSOLE	409
BRACE SUB-ASSY, INSTRUMENT PANEL, NO.1	373
BRACE SUB-ASSY, REAR FLOOR SIDE MEMBER	395
BRACE, INSTRUMENT PANEL TO FLOOR, NO.2	374
BRACKET	148
BRACKET	545
BRACKET ASSY, FRONT BUMPER SIDE MOUNTING, RH	343
BRACKET ASSY, STEERING COLUMN UPPER W/SWITCH	288
BRACKET SUB-ASSY, CENTER SUPPORT BEARING	268
BRACKET SUB-ASSY, ENGINE REAR MOUNTING, LH	390
BRACKET SUB-ASSY, ENGINE REAR MOUNTING, RH	390
BRACKET SUB-ASSY, OIL FILTER	127
BRACKET SUB-ASSY, SHIFT LEVER HOUSING	234
BRACKET, ACCELERATOR CONTROL CABLE	552
BRACKET, ACCELERATOR CONTROL CABLE	552
BRACKET, ACCELERATOR PEDAL ROD	552
BRACKET, AIR CLEANER	163
BRACKET, AIR CLEANER	164
BRACKET, AIR CLEANER INLET DUCT	164
BRACKET, AIR CLEANER PIPE, NO.3	164
BRACKET, AIR CONDITIONER CONTROL	663
BRACKET, BATTERY CARRIER	531
BRACKET, BOX SUPPORT	409
BRACKET, BRAKE ACTUATOR, NO.1	317
BRACKET, CHARCOAL CANISTER MOUNTING	364
BRACKET, CLUTCH CABLE	197
BRACKET, CLUTCH TUBE, NO.1	198

PART NAME	PAGE
BRACKET, CLUTCH TUBE, NO.2	198
BRACKET, COMPRESSOR MOUNTING, NO.1	674
BRACKET, COMPUTER	610
BRACKET, COMPUTER UNIT	617
BRACKET, COOLER	674
BRACKET, COOLER CONDENSER, NO.1	667
BRACKET, COOLER CONDENSER, NO.2	667
BRACKET, DASH PANEL	364
BRACKET, DOME LAMP, NO.2	423
BRACKET, ENGINE MOUNTIMG, REAR	237
BRACKET, ENGINE MOUNTING, FRONT NO.1 LH	105
BRACKET, ENGINE MOUNTING, FRONT NO.1 RH	105
BRACKET, ENGINE MOUNTING, FRONT NO.2	105
BRACKET, ENGINE MOUNTING, REAR	202
BRACKET, FLEXIBLE HOSE(FOR CLUTCH)	198
BRACKET, FLEXIBLE HOSE, FRONT LH	390
BRACKET, FLEXIBLE HOSE, FRONT RH	389
BRACKET, FRONT BUMPER SIDE MOUNTING, LH	361
BRACKET, FRONT BUMPER SIDE MOUNTING, RH	361
BRACKET, FRONT FENDER LINER, LH	352
BRACKET, FRONT FENDER LINER, RH	352
BRACKET, FRONT FENDER MOUNTING, LH	364
BRACKET, FRONT FENDER MOUNTING, RH	364
BRACKET, FRONT FLOOR HEAT INSULATOR, NO.1	391
BRACKET, FRONT FLOOR HEAT INSULATOR, NO.2	391
BRACKET, FRONT SEAT CUSHION, LH	502
BRACKET, FRONT SEAT CUSHION, RH	502
BRACKET, FRONT STABILIZER, NO.1 LH	328
BRACKET, FRONT STABILIZER, NO.1 RH	327
BRACKET, FUEL PUMP	547
BRACKET, HEADLAMP, LH	556
BRACKET, HEADLAMP, RH	556
BRACKET, IDLER PULLEY	148
BRACKET, INTAKE AIR CONNECTOR, NO.2	164
BRACKET, JACK SET	391
BRACKET, JUNCTION BLOCK	602
BRACKET, MAP LAMP	564
BRACKET, NO.3 SEAT LEG, REAR LH	517
BRACKET, NO.3 SEAT LEG, REAR RH	517
BRACKET, PARKING LOCK PAWL	264
BRACKET, RADIATOR RESERVE TANK MOUNTING	362
BRACKET, RADIATOR, NO.1	148
BRACKET, RADIO, NO.1	632
BRACKET, RADIO, NO.2	632
BRACKET, REAR BUMPER SIDE	419
BRACKET, REAR BUMPER SIDE MOUNTIN, RH	395
BRACKET, REAR BUMPER SIDE, LH	419
BRACKET, SENSOR	607
BRACKET, STABILIZER, FRONT	327
BRACKET, STEERING RACK HOUSING, NO.1	293

PART NAME	PAGE
BRACKET, THROTTLE BODY	188
BRACKET, THROTTLE BODY, NO.2	188
BRACKET, TRANSMISSION CONTROL CABLE	245
BRACKET, TRANSMISSION CONTROL CABLE, NO.1	236
BRACKET, WATER HOSE CLAMP, NO.1	147
BRACKET,REAR FLOOR PLATE	398
BRACKET,WIRING HARNESS CLAMP	602
BRACKET,WIRING HARNESS CLAMP	603
BRUSH, ALTERNATOR	176
BRUSH, STARTER	183
BULB (FOR FRONT TURN SIGNAL LAMP)	556
BULB (FOR LICENSE PLATE LAMP)	562
BULB(FOR CLEARANCE LAMP)	557
BULB(FOR HEADLAMP, NO.1)	556
BULB, BACK UP LAMP	561
BULB, FOG LAMP	558
BULB, HEATER CONTROL	662
BULB, REAR TURN SIGNAL LAMP	560
BULB, ROOM LAMP, NO.1	564
BULB, ROOM LAMP, NO.2	564
BULB, ROOM LAMP, NO.2	565
BULB, TAIL & STOP LAMP	561
BUMPER, FRONT SPRING, LH	325
BUMPER, FRONT SPRING, RH	325
BUMPER, HOOD TO FRONT SHROUD	362
BUMPER, REAR SPRING	330
BUSH	518
BUSH	519
BUSH (FOR ACCELERATOR PEDAL ROD)	552
BUSH (FOR SHIFT LEVER RETAINER)	234
BUSH(FOR BRAKE PEDAL)	299
BUSH(FOR CLUTCH PEDAL SPRING)	197
BUSH(FOR CLUTCH PEDAL)	196
BUSH(FOR CLUTCH RELEASE CABLE)	197
BUSH(FOR CONTROL SHIFT LEVER RETAINER)	235
BUSH(FOR FRONT SHOCK ABSORBER LH)	326
BUSH(FOR FRONT SHOCK ABSORBER RH)	325
BUSH(FOR FRONT SHOCK ABSORBER RH)	326
BUSH(FOR REAR SHOCK ABSORBER LH)	331
BUSH(FOR REAR SHOCK ABSORBER RH)	330
BUSH(FOR SHIFT LEVER SHAFT)	227
BUSH, EXHAUST VALVE GUIDE	87
BUSH, FRONT STABILIZER BAR, NO.1	327
BUSH, INTAKE VALVE GUIDE	87
BUSH, LATERAL CONTROL ROD	332
BUSH, NO.1(FOR REAR LATERAL CONTROL ROD)	332
BUSH, NO.1, SHIFT LEVER (FOR FLOOR SHIFT)	235
BUSH, NO.2(FOR REAR LATERAL CONTROL ROD)	332
BUSH, REAR WASHER JAR	629
BUSH, STEERING MAIN SHAFT	289

PART NAME	PAGE
BUSH, TANK LOWER	146
BUSH, WINDSHIELD WASHER JAR	625
BUTTON ASSY, HORN	291
BUZZER, WIRELESS DOOR LOCK	614
CABLE ASSY, ACCELERATOR CONTROL	552
CABLE ASSY, CLUTCH RELEASE	197
CABLE ASSY, FRONT DOOR INSIDE LOCKING LH	447
CABLE ASSY, FRONT DOOR INSIDE LOCKING, RH	447
CABLE ASSY, FRONT DOOR LOCK REMOTE CONTROL, LH	447
CABLE ASSY, FRONT DOOR LOCK REMOTE CONTROL, RH	446
CABLE ASSY, HOOD LOCK CONTROL	355
CABLE ASSY, PARKING BRAKE, NO.2	296
CABLE ASSY, PARKING BRAKE, NO.3	297
CABLE ASSY, REAR DOOR INSIDE LOCKING, LH	460
CABLE ASSY, REAR DOOR INSIDE LOCKING, RH	460
CABLE ASSY, REAR DOOR LOCK REMOTE CONTROL LH	460
CABLE ASSY, REAR DOOR LOCK REMOTE CONTROL, RH	459
CABLE ASSY, TRANSMISSION CONTROL	236
CABLE SUB-ASSY, AIR INLET DAMPER CONTROL	662
CABLE SUB-ASSY, FUEL LID LOCK CONTROL	545
CABLE SUB-ASSY, SPIRAL	604
CABLE TRANSMISSION CONTROL SELECT (FOR FLOOR SHIFT)	236
CABLE, ANTENNA	636
CABLE, REAR SEAT LOCK CONTROL	514
CAMSHAFT	116
CAMSHAFT, NO.2	116
CAMSHAFT, NO.2	117
CANISTER ASSY, CHARCOAL	550
CAP	514
CAP ASSY, BRAKE MASTER CYLINDER RESERVOIR FILLER	302
CAP ASSY, FUEL TANK	549
CAP SUB-ASSY, AIR CLEANER	163
CAP SUB-ASSY, OIL FILLER	89
CAP SUB-ASSY, RADIATOR	145
CAP SUB-ASSY, RESERVE TANK	146
CAP, AIR CLEANER	163
CAP, BLEEDER PLUG(FOR DRUM BRAKE, REAR)	312
CAP, BLEEDER PLUG(FOR FRONT DISC BRAKE)	307
CAP, FRONT DOOR TRIM RETAINER	440
CAP, FRONT HUB GREASE	287
CAP, FRONT WIPER ARM HEAD	621
CAP, REAR SEAT COVER, LH	508
CAP, REAR SEAT COVER, RH	508
CAP, REAR WIPER LINK	622
CAP, SERVICE VALVE, NO.1	667
CAP, SERVICE VALVE, NO.2	667
CAP, VALVE STEM	118
CAP, WINDSHIELD WASHER JAR	625
CARPET ASSY, FRONT FLOOR, FRONT	403
CARPET ASSY, REAR FLOOR	404

PART NAME	PAGE
CARPET, REAR NO.2 SEAT CUSHION, LH	517
CARPET, REAR WHEEL HOUSE, LH	404
CARPET, REAR WHEEL HOUSE, RH	403
CARRIER ASSY, DIFFERENTIAL, REAR	272
CARRIER ASSY, SPARE WHEEL	340
CARRIER SUB-ASSY, DIFFERENTIAL, REAR	272
CARRIER, BATTERY	531
CARRIER, JACK	392
CASE SUB-ASSY, AIR CLEANER	163
CASE SUB-ASSY, AUTOMATIC TRANSMISSION	245
CASE SUB-ASSY, BLOWER	654
CASE SUB-ASSY, COOLER BLOWER	653
CASE SUB-ASSY, COOLER BLOWER	654
CASE, AIR FILTER	655
CASE, COOLER BLOWER, LOWER	655
CASE, COOLER BLOWER, UPPER	655
CASE, MANUAL TRANSMISSION	208
CASE, REAR DIFFERENTIAL	277
CASE, REAR DIFFERENTIAL	278
CASE, TRANSMITTER HOUSING	479
CHAIN SUB-ASSY	116
CHAMBER, SUCTION	168
CHAMBER, SUCTION	545
CHECK ASSY, FRONT DOOR, LH	442
CHECK ASSY, FRONT DOOR, RH	442
CHECK ASSY, REAR DOOR, LH	455
CHECK ASSY, REAR DOOR, RH	455
CLAMP	655
CLAMP	655
CLAMP (FOR FUEL LID LOCK CONTROL CABLE)	545
CLAMP NO.1, EXHAUST PIPE FRONT (FOR FRONT)	159
CLAMP OR CLIP(FOR AIR HOSE)	163
CLAMP OR CLIP(FOR WATER BY-PASS HOSE NO.3)	143
CLAMP OR CLIP(FOR WATER BY-PASS HOSE)	143
CLAMP OR CLIP, HOSE(FOR RADIATOR INLET)	146
CLAMP OR CLIP, HOSE(FOR WATER BY-PASS HOSE)	143
CLAMP SUB-ASSY, BATTERY	531
CLAMP(FOR AIR CLEANER HOSE, NO.1)	164
CLAMP(FOR AIR CLEANER INLET DUCT)	163
CLAMP(FOR AIR CLEANER INLET, NO.1)	163
CLAMP(FOR HOOD LOCK CONTROL CABLE)	355
CLAMP(FOR HOOD LOCK CONTROL CABLE)	356
CLAMP(FOR STEERING RACK BOOT)	293
CLAMP(FOR VACUUM HOSE)	168
CLAMP(FOR VENTILATION HOSE)	108
CLAMP, ACCELERATOR CONTROL CABLE	552
CLAMP, BRAKE TUBE, NO.1	319
CLAMP, BRAKE TUBE, NO.10	320
CLAMP, BRAKE TUBE, NO.11	320
CLAMP, BRAKE TUBE, NO.12	320

PART NAME	PAGE
CLAMP, BRAKE TUBE, NO.2	320
CLAMP, BRAKE TUBE, NO.3	320
CLAMP, BRAKE TUBE, NO.4	320
CLAMP, BRAKE TUBE, NO.5	320
CLAMP, BRAKE TUBE, NO.6	319
CLAMP, BRAKE TUBE, NO.7	319
CLAMP, BRAKE TUBE, NO.8	319
CLAMP, BRAKE TUBE, NO.9	319
CLAMP, BRAKE TUBE, NO.9	320
CLAMP, CENTER CLUSTER MODULE SWITCH HARNESS	604
CLAMP, FRONT DOOR LOCK LINK	447
CLAMP, FUEL HOSE	168
CLAMP, FUEL PIPE, NO.1(FOR EFI)	189
CLAMP, FUEL PIPE, NO.2(FOR EFI)	189
CLAMP, FUEL TUBE	548
CLAMP, FUEL TUBE, NO.1	548
CLAMP, FUEL TUBE, NO.1	548
CLAMP, FUEL TUBE, NO.1	548
CLAMP, FUEL TUBE, NO.2	189
CLAMP, FUEL TUBE, NO.2	548
CLAMP, FUEL TUBE, NO.2	548
CLAMP, FUEL TUBE, NO.3	548
CLAMP, FUEL TUBE, NO.3	548
CLAMP, HOOD LOCK CONTROL CABLE	355
CLAMP, HOOD SUPPORT ROD	355
CLAMP, HOSE(FOR RADIATOR HOSE NO.2)	147
CLAMP, HOSE(FOR RADIATOR HOSE)	147
CLAMP, HOSE(FOR WATER BY-PASS PIPE)	143
CLAMP, HOSE(FOR WATER BY-PASS PIPE)	144
CLAMP, NO.1(FOR COOLER REFRIGERANT HOSE)	669
CLAMP, NO.1(FOR COOLER REFRIGERANT PIPE)	669
CLAMP, NO.1(FOR PARKING BRAKE CABLE)	296
CLAMP, NO.2(FOR COOLER REFRIGERANT HOSE)	669
CLAMP, NO.2(FOR PARKING BRAKE CABLE)	296
CLAMP, NO.3(FOR COOLER REFRIGERANT PIPE)	669
CLAMP, NO.3(FOR PARKING BRAKE CABLE)	296
CLAMP, NO.3(FOR PARKING BRAKE CABLE)	297
CLAMP, NO.4(FOR COOLER REFRIGERANT HOSE)	669
CLAMP, NO.4(FOR COOLER REFRIGERANT PIPE)	669
CLAMP, NO.4(FOR PARKING BRAKE CABLE)	297
CLAMP, NO.5(FOR COOLER REFRIGERANT PIPE)	669
CLAMP, PIPE	168
CLAMP, RADIATOR RESERVE TANK HOSE	146
CLAMP, REAR DOOR LOCK	460
CLAMP, REAR WASHER HOSE	630
CLAMP, SPARE WHEEL COVER	340
CLAMP, SWITCH HARNESS	246
CLAMP, TRANSMISSION CONTROL CABLE	236
CLAMP, VALVE BODY WIRE HARNESS	261
CLEANER ASSY, AIR	163

PART NAME	PAGE
CLEVIS, BRAKE MASTER CYLINDER PUSH ROD	305
CLIP	146
CLIP	148
CLIP	365
CLIP	365
CLIP	504
CLIP	504
CLIP	509
CLIP	509
CLIP (FOR CENTER PILLAR GARNISH PANEL, UPPER)	430
CLIP (FOR QUARTER TRIM GARNISH)	431
CLIP (FOR QUARTER WHEEL HOUSE COVER)	405
CLIP OR CLAMP(FOR VENTILATION HOSE)	107
CLIP OR CLAMP(FOR VENTILATION HOSE)	107
CLIP(FOR AIR HOSE NO.2)	163
CLIP(FOR BACK DOOR SIDE GARNISH)	470
CLIP(FOR BACK DOOR TRIM)	470
CLIP(FOR CLUTCH RELEASE CABLE)	197
CLIP(FOR CONSOLE BOX)	409
CLIP(FOR DECK SIDE TRIM PANEL)	432
CLIP(FOR FRONT BODY PILLAR GARNISH)	429
CLIP(FOR FRONT BUMPER RETAINER)	343
CLIP(FOR FRONT BUMPER), NO.1	343
CLIP(FOR FRONT DOOR TRIM BOARD)	439
CLIP(FOR FRONT DOOR TRIM BOARD)	439
CLIP(FOR FRONT FLOOR CARPET)	403
CLIP(FOR FRONT FLOOR CARPET)	404
CLIP(FOR FRONT FLOOR CARPET)	404
CLIP(FOR HOOD INSULATOR)	351
CLIP(FOR INSTRUMENT LOWER COVER)	376
CLIP(FOR INSTRUMENT LOWER COVER)	376
CLIP(FOR OIL COOLER HOSE)	266
CLIP(FOR PUSH ROD CLEVIS PIN)	300
CLIP(FOR QUARTER TRIM FRONT PANEL)	431
CLIP(FOR REAR DOOR TRIM BOARD)	453
CLIP(FOR REAR DOOR TRIM BOARD)	453
CLIP(FOR REAR FLOOR CARPET)	404
CLIP(FOR REAR PILLAR GARNISH)	431
CLIP(FOR ROOF HEADLINING)	434
CLIP(FOR SCUFF PLATE)	405
CLIP(FOR STEERING RACK BOOT)	293
CLIP(FOR VACUUM HOSE)	304
CLIP(FOR VENTILATION HOSE)	108
CLIP(FOR VENTILATION HOSE)	108
CLIP(FOR VENTILATION HOSE)	108
CLIP(FOR WATER BY-PASS HOSE NO.3)	143
CLIP(FOR WATER BY-PASS HOSE NO.4)	143
CLIP(FOR WATER BY-PASS HOSE NO.5)	144
CLIP(FOR WATER BY-PASS HOSE)	143
CLIP(FOR WATER BY-PASS HOSE)	144

PART NAME	PAGE
CLIP(FOR WATER INLET HOSE)	143
CLIP, BACK DOOR OUTSIDE GARNISH	471
CLIP, BACK WINDOW GLASS, LH	469
CLIP, BACK WINDOW GLASS, RH	469
CLIP, COWL TOP VENTILATOR LOUVER	381
CLIP, ENGINE UNDER COVER, NO.2	338
CLIP, ENGINE UNDER COVER, NO.2	339
CLIP, FRONT DOOR WEATHERSTRIP	441
CLIP, FRONT FENDER LINER	352
CLIP, FUEL HOSE	547
CLIP, HOSE	163
CLIP, NO.1(FOR COWL SIDE TRIM)	428
CLIP, NO.2(FOR COWL SIDE TRIM)	428
CLIP, RADIATOR HOSE, NO.1	147
CLIP, RADIATOR HOSE, NO.2	147
CLIP, RADIATOR HOSE, NO.4	147
CLIP, REAR BUMPER SIDE	346
CLIP, REAR SEAT BELT COVER	525
CLIP, RELEASE BEARING HUB	192
CLIP, ROOF DRIP SIDE FINISH MOULDING	538
CLIP, ROOF HEADLINING	434
CLIP, RR COMBINATION LAMP, LH	561
CLIP, RR COMBINATION LAMP, RH	561
CLIP, SEAT LEG COVER	516
CLUTCH ASSY, 1 WAY	257
CLUTCH ASSY, FRONT MULTIPLE DISC	252
CLUTCH ASSY, MAGNET	673
CLUTCH ASSY, MAGNET	674
CLUTCH ASSY, REAR MULTIPLE DISC	252
CLUTCH SUB-ASSY, STARTER	182
CLUTCH SUB-ASSY, STARTER CENTER BEARING	182
COCK SUB-ASSY, RADIATOR DRAIN	145
COCK SUB-ASSY, RADIATOR DRAIN	146
COIL ASSY, ALTERNATOR	176
COIL ASSY, IGNITION	172
COIL, TRANSPONDER KEY	618
COLLAR	674
COLUMN ASSY, STEERING	288
COLUMN ASSY, STEERING	289
COMPRESSION SPRING, TRANSAXLE CASE	245
COMPRESSOR ASSY, COOLER	672
COMPUTER ASSY, AIR BAG	617
COMPUTER ASSY, POWER STEERING	608
COMPUTER ASSY, TRANSMISSION CONTROL	607
COMPUTER ASSY, TRANSMISSION CONTROL	608
COMPUTER ASSY, TRANSPONDER KEY	618
COMPUTER, FUEL INJECTION	610
COMPUTER, SHIFT LOCK CONTROL	607
CONDENSER ASSY, COOLER	667
CONTROL ASSY, HEATER	662

PART NAME	PAGE
CONVERTER ASSY, TORQUE	239
CONVERTER SUB-ASSY, EXHAUST MANIFOLD	154
COOLER, EVAPORATOR	653
CORD SUB-ASSY, ANTENNA	636
CORD, HEADLAMP	556
CORE, COOLER CONDENSER	667
COVER	653
COVER ASSY, CLUTCH	192
COVER REAR SEAT RECLINING, RH	508
COVER SUB-ASSY, CYLINDER HEAD	88
COVER SUB-ASSY, ENGINE SIDE, LH	339
COVER SUB-ASSY, ENGINE SIDE, RH	339
COVER SUB-ASSY, INSTRUMENT PANEL UNDER, NO.1	378
COVER SUB-ASSY, INSTRUMENT PANEL UNDER, NO.3	378
COVER SUB-ASSY, NO.1 SEAT CUSHION, LH	515
COVER SUB-ASSY, NO.1 SEAT CUSHION, RH	514
COVER SUB-ASSY, NO.1 SEAT CUSHION, RH	515
COVER SUB-ASSY, NO.2 SEAT BACK, LH	516
COVER SUB-ASSY, NO.2 SEAT BACK, RH	515
COVER SUB-ASSY, NO.2 SEAT BACK, RH	516
COVER SUB-ASSY, NO.2 SEAT CUSHION	515
COVER SUB-ASSY, NO.2 SEAT CUSHION, LH	515
COVER SUB-ASSY, NO.2 SEAT CUSHION, RH	515
COVER SUB-ASSY, REAR SEAT CUSHION, FRONT LH	501
COVER SUB-ASSY, REAR SEAT CUSHION, RH	500
COVER SUB-ASSY, REAR SEAT CUSHION, RH	501
COVER SUB-ASSY, STEERING COLUMN HOLE	288
COVER SUB-ASSY, TIMING CHAIN OR BELT	101
COVER SUB-ASSY, WATER PUMP	131
COVER, BATTERY	531
COVER, BATTERY	566
COVER, CIGAR LIGHTER HOLE	376
COVER, CLUTCH HOUSING UNDER	208
COVER, CLUTCH HOUSING, NO.1	208
COVER, CLUTCH HOUSING, NO.2	208
COVER, CONSOLE BOX HOLE	408
COVER, CONSOLE BOX, REAR	409
COVER, CONTROL SHAFT	230
COVER, COOLER UNIT	655
COVER, DASH PANEL HOLE	364
COVER, DIFFERENTIAL CASE	278
COVER, DISC BRAKE DUST, FRONT LH	309
COVER, DISC BRAKE DUST, FRONT RH	309
COVER, DUST	188
COVER, ENGINE UNDER	338
COVER, ENGINE UNDER, CENTER	339
COVER, ENGINE UNDER, NO.1	338
COVER, FLYWHEEL HOUSING SIDE	97
COVER, FRONT BUMPER	342
COVER, FRONT BUMPER	343

PART NAME	PAGE
COVER, FRONT BUMPER HOLE	343
COVER, FRONT DOOR SERVICE HOLE, LH	440
COVER, FRONT DOOR SERVICE HOLE, RH	440
COVER, FRONT SEAT BACK, LH(FOR SEPARATE TYPE)	500
COVER, FRONT SEAT BACK, RH(FOR SEPARATE TYPE)	500
COVER, FRONT SEAT CUSHION, LH	514
COVER, FRONT SEAT CUSHION, LH(FOR SEPARATE TYPE)	499
COVER, FRONT SEAT CUSHION, LH(FOR SEPARATE TYPE)	500
COVER, FRONT SEAT CUSHION, RH	514
COVER, FRONT SEAT CUSHION, RH(FOR SEPARATE TYPE)	499
COVER, FRONT SEAT HINGE, LH	507
COVER, FRONT SEAT HINGE, LH	508
COVER, FRONT SEAT HINGE, RH	507
COVER, FRONT SEAT LEG NO.1	502
COVER, FRONT SEAT LEG NO.2	503
COVER, FRONT SEAT LEG, LH	503
COVER, FRONT SEAT LEG, NO.1	502
COVER, FRONT SUSPENSION SUPPORT DUST, LH	326
COVER, FRONT SUSPENSION SUPPORT DUST, LH	327
COVER, FRONT SUSPENSION SUPPORT DUST, RH	326
COVER, FUEL TANK FILLER PIPE	547
COVER, FUSE BOX OPENING	377
COVER, HEADLAMP SOCKET	556
COVER, HEATER	653
COVER, HOOD HINGE, LH	354
COVER, HOOD HINGE, RH	354
COVER, HOOD LOCK CONTROL CABLE	355
COVER, INNER REAR VIEW MIRROR STAY HOLDER	641
COVER, INSTRUMENT LOWER, RH	376
COVER, INSTRUMENT PANEL UNDER, NO.2	378
COVER, INSTRUMENT, LWR	376
COVER, NO.2 SEAT CUSHION	518
COVER, NO.2 SEAT HINGE	517
COVER, NO.2 SEAT LEG	517
COVER, NO.2 SEAT LEG, LH	517
COVER, NO.2 SEAT LEG, NO.1	517
COVER, OIL CONTROL VALVE	90
COVER, OIL PUMP	125
COVER, OUTER MIRROR, LH	642
COVER, OUTER MIRROR, LH	642
COVER, OUTER MIRROR, LH NO.2	642
COVER, OUTER MIRROR, RH	641
COVER, OUTER MIRROR, RH	641
COVER, OUTER MIRROR, RH NO.2	641
COVER, POWER OUTLET SOCKET, NO.1	606
COVER, POWER OUTLET SOCKET, NO.2	606
COVER, RADIO TUNER OPENING	376
COVER, REAR BUMPER	346
COVER, REAR DOOR SERVICE HOLE, LH	453
COVER, REAR DOOR SERVICE HOLE, RH	453

PART NAME	PAGE
COVER, REAR SEAT BACK, LH(FOR SEPARATE TYPE)	501
COVER, REAR SEAT BACK, LH(FOR SEPARATE TYPE)	502
COVER, REAR SEAT BACK, RH (FOR SEPARATE TYPE)	501
COVER, REAR SEAT BELT RETRACTOR	525
COVER, REAR SEAT CUSHION LOCK	514
COVER, REAR SEAT CUSHION UNDER	514
COVER, REAR SEAT CUSHION UNDER, NO.2	514
COVER, REAR SEAT HINGE	504
COVER, REAR SEAT HINGE	505
COVER, REAR SEAT HINGE	504
COVER, REAR SEAT HINGE	504
COVER, REAR SEAT HINGE, NO.2 LH	505
COVER, REAR SEAT HINGE, NO.2 RH	504
COVER, REAR SEAT LEG, LH	518
COVER, REAR SEAT LOCK, LH	513
COVER, REAR SEAT LOCK, RH	513
COVER, REAR SEAT RECLINING, INNER LH	508
COVER, REAR SEAT RECLINING, INNER RH	508
COVER, REAR SEAT RECLINING, LH	508
COVER, REAR SEAT TRACK BRACKET	511
COVER, REAR WIPER MOTOR	622
COVER, RELAY BLOCK, NO.1	602
COVER, REMOTE CONTROL MIRROR HOLE	377
COVER, REMOTE CONTROL MIRROR HOLE	378
COVER, RR SEAT LEG	518
COVER, SEAT TRACK BRACKET, INNER LH	511
COVER, SEAT TRACK BRACKET, INNER RH	511
COVER, SEAT TRACK, LH	511
COVER, SEAT TRACK, RH	511
COVER, SHIFTING HOLE	408
COVER, SHOULDER BELT ANCHOR	523
COVER, SHOULDER BELT ANCHOR	523
COVER, SPARE SWITCH HOLE	377
COVER, SPARE SWITCH HOLE	377
COVER, SPARE SWITCH HOLE	377
COVER, SPARE SWITCH HOLE	377
COVER, STEERING COLUMN, LWR	289
COVER, STEERING COLUMN, UPR	289
COVER, STEREO OPENING	376
COVER, TIMING CHAIN OR BELT, NO.2	102
COVER, TRANSMITTER HOUSING	478
CRANKSHAFT	113
CROSSMEMBER SUB-ASSY, FRONT SUSPENSION	338
CROSSMENBER SUB-ASSY, FRONT SUSPENSION, LOWER	338
CUP KIT, REAR WHEEL CYLINDER	311
CUSHION (FOR ACCELERATOR ROD)	552
CUSHION(FOR BACK DOOR PANEL)	469
CUSHION(FOR STOP LAMP SWITCH)	299
CUSHION, BRAKE ACTUATOR BRACKET	317
CUSHION, COURTESY SWITCH	604

PART NAME	PAGE
CUSHION, FOLD SEAT LEG	518
CUSHION, FRONT DOOR PANEL	438
CUSHION, FUEL TANK, NO.1	550
CUSHION, FUEL TANK, NO.2	550
CUSHION, GLOVE COMPARTMENT DOOR CHECK	378
CUSHION, HOOD BUMPER	362
CUSHION, INSTRUMENT PANEL, NO.1	374
CUSHION, INSTRUMENT PANEL, NO.2	374
CUSHION, INSTRUMENT PANEL, NO.3	374
CUSHION, NO.1(FOR CLUTCH PEDAL)	196
CUSHION, REAR LICENCE PLATE	470
CUSHION, REAR SEAT	503
CYLINDER & KEY SET, BACK DOOR LOCK	477
CYLINDER & KEY SET, DOOR LOCK, LH	477
CYLINDER & KEY SET, DOOR LOCK, RH	477
CYLINDER & KEY SET, IGNITION SWITCH LOCK	477
CYLINDER ASSY, CLUTCH MASTER	199
CYLINDER ASSY, CLUTCH RELEASE	200
CYLINDER ASSY, DISC BRAKE, LH	308
CYLINDER ASSY, FRONT DISC BRAKE, RH	308
CYLINDER ASSY, REAR WHEEL BRAKE(FOR LH, FRONT OR UPPER)	312
CYLINDER ASSY, REAR WHEEL BRAKE(FOR RH, FRONT OR UPPER)	312
CYLINDER KIT, BRAKE MASTER	301
CYLINDER KIT, CLUTCH MASTER	199
CYLINDER KIT, CLUTCH RELEASE	200
CYLINDER KIT, DISC BRAKE, FRONT	307
CYLINDER KIT, REAR WHEEL	311
CYLINDER SET, LOCK	478
CYLINDER SET, LOCK W/TRANSPONDER KEY TRANSMITTER	478
CYLINDER SUB-ASSY, BRAKE MASTER	301
CYLINDER, 2ND & 4TH BRAKE	255
DAM, WINDOW GLASS ADHESIVE	381
DAM, WINDOW GLASS ADHESIVE, NO.2	381
DAMPER ASSY, FUEL PRESSURE PULSATION	188
DAMPER, CHAIN VIBRATION, NO.2	117
DAMPER, ENGINE MOUNTING	105
DEFLECTOR, DUST (FOR REAR DIFFERENTIAL)	277
DEFLECTOR, EXTENSION HOUSING DUST(MTM)	211
DISC ASSY, CLUTCH	193
DISC, BRAKE	258
DISC, BRAKE, NO.1	255
DISC, CLUTCH (FOR DIRECT MULTIPLE DISC CLUTCH)	252
DISC, CLUTCH (FOR FORWARD MULTIPLE DISC CLUTCH)	252
DISC, CLUTCH (FOR FRONT CLUTCH)	252
DISC, FRONT	287
DISC, REAR CLUTCH	253
DOOR SUB-ASSY, GLOVE COMPARTMENT	376
DRIVER, SCREW	71
DRUM SUB-ASSY, REAR BRAKE	282
DRYER, COOLER	667

PART NAME	PAGE
DUCT ASSY, AIR	663
DUCT ASSY, QUARTER VENT	425
DUCT SUB-ASSY, HEATER TO REGISTER, CENTER	662
ELEMENT SUB-ASSY, AIR CLEANER FILTER	164
EMBLEM, BACK DOOR, NO.1	535
EMBLEM, RADIATOR GRILLE (OR FRONT PANEL)	535
END SUB-ASSY, STEERING RACK	293
END SUB-ASSY, TIE ROD, LH	293
END SUB-ASSY, TIE ROD, RH	293
ENGINE ASSY, PARTIAL	73
EVAPORATOR SUB-ASSY (REAR)	653
EXTENSION SUB-ASSY, FRONT FENDER APRON, LH	388
EXTENSION SUB-ASSY, JACK HANDLE	71
EXTENSION, BACK DOOR, INNER LH	469
EXTENSION, BACK DOOR, INNER LH	470
EXTENSION, BACK DOOR, INNER RH	469
EXTENSION, FRONT BUMPER	342
EXTENSION, FRONT SIDE MEMBER, LH	388
EXTENSION, FRONT SIDE MEMBER, LH	389
EXTENSION, FRONT SIDE MEMBER, RH	388
EXTENSION, QUARTER PANEL TO UPPER BACK, LH	417
EXTENSION, QUARTER PANEL TO UPPER BACK, RH	417
EXTENSION, QUARTER PANEL, OUTER LH	416
EXTENSION, QUARTER PANEL, OUTER RH	416
EXTENSION, QUARTER PANEL, UPPER LH	416
EXTENSION, QUARTER PANEL, UPPER RH	416
FAN	145
FAN ASSY, W/MOTOR	145
FASTENER, PILE	404
FASTENER, PILE, UPR	404
FENDER SUB-ASSY, FRONT LH	352
FENDER SUB-ASSY, FRONT RH	351
FILTER ASSY, FUEL	545
FILTER SUB-ASSY, OIL	127
FILTER, AIR	655
FILTER, OIL CONTROL VALVE	90
FILTER, OIL CONTROL VALVE	128
FITTING KIT, DISC BRAKE, FRONT	307
FLANGE SUB-ASSY, REAR DRIVE PINION COMPANION, REAR	277
FLANGE, BRAKE	258
FLANGE, BRAKE, NO.1	255
FLANGE, CRANKSHAFT TIMING BELT PULLEY	114
FLANGE, FORWARD CLUTCH	252
FLANGE, REAR CLUTCH	253
FLANGE, REVERSE CLUTCH	252
FLASHER ASSY, TURN SIGNAL	602
FLOOR SHIFT ASSY, TRANSMISSION	235
FLYWHEEL SUB-ASSY	112
FOOTREST, FRONT FLOOR	391
FORK, CLUTCH RELEASE	192

PART NAME	PAGE
FORK, CLUTCH RELEASE	193
FORK, GEAR SHIFT, NO.1	227
FORK, GEAR SHIFT, NO.2	227
FORK, GEAR SHIFT, NO.3	227
FRAME ASSY, FRONT SEAT W/ADJUSTER, LH	502
FRAME ASSY, FRONT SEAT W/ADJUSTER, RH	502
FRAME ASSY, STARTER COMMUTATOR END	182
FRAME SUB-ASSY, FRONT DOOR, REAR LOWER LH	439
FRAME SUB-ASSY, FRONT DOOR, REAR LOWER RH	439
FRAME SUB-ASSY, NO.3 SEAT BACK, LH	518
FRAME SUB-ASSY, NO.3 SEAT BACK, RH	518
FRAME SUB-ASSY, REAR DOOR WINDOW, REAR LOWER LH	452
FRAME SUB-ASSY, REAR DOOR WINDOW, REAR LOWER RH	452
FRAME SUB-ASSY, REAR SEAT BACK, LH	499
FRAME SUB-ASSY, REAR SEAT BACK, RH	499
FRAME, BACK DOOR OPENING, INNER	423
FRAME, SHIFTING HOLE	409
FUSE(FOR COOLER WIRING HARNESS)	656
GAGE ASSY, FUEL SENDER	603
GAGE SUB-ASSY, OIL LEVEL	99
GAGE SUB-ASSY, TRANSMISSION OIL LEVEL	244
GARNISH SUB-ASSY, BACK DOOR, OUTSIDE UPPER LH	470
GARNISH SUB-ASSY, BACK DOOR, OUTSIDE UPPER RH	470
GARNISH, BACK DOOR, OUTSIDE	470
GARNISH, BACK DOOR, OUTSIDE	471
GARNISH, BACK DOOR, OUTSIDE LOWER	471
GARNISH, CENTER PILLAR, LOWER LH	430
GARNISH, CENTER PILLAR, LOWER RH	430
GARNISH, CENTER PILLAR, UPPER LH	430
GARNISH, CENTER PILLAR, UPPER RH	430
GARNISH, FRONT DOOR LOWER FRAME BRACKET, LH	439
GARNISH, FRONT DOOR LOWER FRAME BRACKET, RH	439
GARNISH, FRONT PILLAR, LH	429
GARNISH, FRONT PILLAR, OUTER LH	538
GARNISH, FRONT PILLAR, OUTER RH	538
GARNISH, FRONT PILLAR, RH	428
GARNISH, FRONT PILLAR, RH	429
GARNISH, INSTRUMENT PANEL FINISH PLATE	376
GARNISH, REAR PILLAR, UPPER LH	431
GARNISH, REAR PILLAR, UPPER RH	431
GARNISH, REAR QUARTER TRIM, FRONT LH	431
GARNISH, REAR QUARTER TRIM, FRONT RH	431
GASKET	102
GASKET	128
GASKET (FOR HEAD STRAIGHT SCREW PLUG)	211
GASKET (FOR REAR AXLE HOUSING DRAIN PLUG)	280
GASKET (FOR TRANSAXLE CASE)	245
GASKET KIT, ENGINE OVERHAUL	79
GASKET KIT, ENGINE VALVE GRIND	79
GASKET KIT, OVERHAUL	673

PART NAME	PAGE
GASKET KIT, TRANSAXLE OVERHAUL(ATM)	237
GASKET(FOR CLUTCH MASTER CYLINDER TO FLEXIBLE HOSE TUBE)	197
GASKET(FOR CLYINDER BLOCK)	99
GASKET(FOR CYLINDER HEAD SCREW PLUG)	87
GASKET(FOR FRONT FLEXIBLE HOSE)	318
GASKET(FOR FUEL TANK)	546
GASKET(FOR OIL COOLER)	99
GASKET(FOR OIL COOLER)	266
GASKET(FOR OIL FILLER CAP)	89
GASKET(FOR OIL PAN DRAIN PLUG)	98
GASKET(FOR REAR DIFFERENTIAL CARRIER PLUG)	273
GASKET(FOR WATER BY-PASS JOINT FRONT)	145
GASKET, AUTOMATIC TRANSAXLE OIL PAN	245
GASKET, BRAKE BOOSTER	305
GASKET, CAMSHAFT BEARING CAP OIL HOLE	88
GASKET, CYLINDER HEAD	87
GASKET, CYLINDER HEAD COVER	89
GASKET, DRAIN PLUG (ATM)	245
GASKET, EXHAUST MANIFOLD TO HEAD	153
GASKET, EXHAUST PIPE	159
GASKET, EXHAUST PIPE, CENTER	159
GASKET, FUEL SUCTION TUBE SET	546
GASKET, INTAKE MANIFOLD TO HEAD, NO.1	154
GASKET, MAGNET SWITCH COVER	183
GASKET, MANUAL TRANSMISSION CASE COVER	227
GASKET, OIL FILTER BRACKET	128
GASKET, OIL PUMP	125
GASKET, OIL STRAINER FLANGE	125
GASKET, REVERSE RESTRICT PIN	230
GASKET, THROTTLE BODY	154
GASKET, THROTTLE BODY	188
GASKET, TIMING BELT COVER, NO.1	102
GASKET, TIMING GEAR OR CHAIN COVER	102
GASKET, TRANSMISSION CASE(ATM)	245
GASKET, WATER INLET HOUSING, NO.2	144
GASKET, WATER OUTLET	144
GASKET, WATER PUMP	132
GEAR ASSY, CAMSHAFT TIMING	116
GEAR ASSY, CAMSHAFT TIMING EXHAUST	116
GEAR ASSY, FRONT PLANETARY	257
GEAR ASSY, STEERING	293
GEAR ASSY,FRONT PLANETARY RING	257
GEAR KIT, DIFFERENTIAL, REAR	272
GEAR OR SPROCKET, CAMSHAFT TIMING	117
GEAR OR SPROCKET, CRANKSHAFT TIMING	114
GEAR SET, OIL PUMP	125
GEAR SUB ASSY, PLANETARY SUN	256
GEAR SUB ASSY, PLANETARY SUN	257
GEAR SUB-ASSY, DRIVE PLATE & RING	239
GEAR SUB-ASSY, REAR PLANETARY	257

PART NAME	PAGE
GEAR SUB-ASSY, REVERSE IDLER	223
GEAR, 1ST	221
GEAR, 2ND	219
GEAR, 3RD	219
GEAR, 5TH	221
GEAR, CAMSHAFT SUB	117
GEAR, COUNTER	223
GEAR, COUNTER	224
GEAR, FLYWHEEL RING	113
GEAR, PLANET	184
GEAR, REAR DIFFERENTIAL SIDE	278
GEAR, SPEEDOMETER DRIVE (MTM)	224
GEAR, STARTER INTERNAL	184
GLASS SUB-ASSY, FRONT DOOR, LH	441
GLASS SUB-ASSY, FRONT DOOR, RH	441
GLASS SUB-ASSY, REAR DOOR, LH	454
GLASS SUB-ASSY, REAR DOOR, RH	454
GLASS, BACK DOOR	470
GLASS, COMBINATION METER	585
GLASS, QUARTER WINDOW, LH	421
GLASS, QUARTER WINDOW, LH	422
GLASS, QUARTER WINDOW, RH	421
GLASS, WINDSHIELD	381
GRILLE ASSY, AIR OUTLET	435
GRILLE, AIR INLET NO.1	667
GRILLE, AIR INLET NO.2	667
GRILLE, AIR INLET NO.3	667
GRILLE, AIR INLET NO.4	667
GRILLE, RADIATOR	349
GRILLE, RADIATOR SIDE, LH	349
GRILLE, RADIATOR SIDE, RH	349
GRILLE, ROOM VENT	434
GRILLE, SPEAKER	633
GRILLE, SPEAKER	633
GRIP ASSY, DOOR ASSIST, LH	529
GRIP ASSY, DOOR ASSIST, RH	528
GRIP ASSY, DOOR ASSIST, RH	529
GRIP ASSY, REAR DOOR ASSIST LH	529
GRIP ASSY, REAR DOOR ASSIST RH	529
GRIP, ASSIST	528
GROMMET	146
GROMMET	163
GROMMET	657
GROMMET (FOR COOLER UNIT DRAIN HOSE)	654
GROMMET (FOR COOLER UNIT)	654
GROMMET(FOR AIR CLEANER BRACKET)	164
GROMMET(FOR HOOD SUPPORT ROD)	355
GROMMET(FOR VENTILATION SYSTEM)	107
GROMMET, (FOR COOLER PIPE)	656
GROMMET, (FOR COOLER PIPE)	657

PART NAME	PAGE
GROMMET, AIR CLEANER INLET DUCT	163
GROMMET, AIR CLEANER INLET DUCT	164
GROMMET, CYLINDER HEAD COVER	89
GROMMET, MASTER CYLINDER RESERVOIR	302
GROMMET, REAR BUMPER STAY	346
GROMMET, REAR WASHER HOSE	630
GROMMET, STEERING RACK HOUSING, NO.1	293
GROMMET, WASHER, A	630
GUIDE, CHARCOAL CANISTER OUTLET	550
GUIDE, OIL LEVEL GAGE	98
GUIDE, REAR COMBINATION LAMP	560
GUIDE, TIMING CHAIN	117
GUIDE, TIMING CHAIN, NO.2	117
GUSSET, FRONT BODY PILLAR, LOWER RH	414
GUSSET, FRONT FENDER APRON, UPPER LH	364
GUSSET, FRONT FENDER APRON, UPPER RH	364
GUSSET, REAR FLOOR CROSSMEMBER	396
GUSSET, UPPER CONTROL ARM SUPPORT, LH	413
HANDLE ASSY, FRONT DOOR OUTSIDE, LH	445
HANDLE ASSY, FRONT DOOR OUTSIDE, LH	446
HANDLE ASSY, FRONT DOOR, OUTSIDE RH	445
HANDLE ASSY, REAR DOOR OUTSIDE, LH	458
HANDLE ASSY, REAR DOOR OUTSIDE, LH	459
HANDLE ASSY, REAR DOOR OUTSIDE, RH	458
HANDLE SUB-ASSY, FRONT DOOR INSIDE, LH	444
HANDLE SUB-ASSY, FRONT DOOR INSIDE, RH	444
HANDLE SUB-ASSY, REAR DOOR INSIDE, LH	457
HANDLE SUB-ASSY, REAR DOOR INSIDE, RH	457
HANDLE, BACK DOOR OUTSIDE	473
HANDLE, REAR SEAT LOCK	512
HANDLE, REAR SEAT LOCK	513
HANDLE, REAR SEAT LOCK, LH	513
HANDLE, RECLINING ADJUSTER RELEASE, LH	512
HANDLE, RECLINING ADJUSTER RELEASE, RH	512
HANDLE, SEAT TRACK ADJUSTING	512
HANDLE, SPARK PLUG WRENCH	72
HANGER, ENGINE, NO.1	89
HANGER, ENGINE, NO.2	89
HANGER, ENGINE, NO.2	90
HANGER, ENGINE, NO.2	244
HANGER, ENGINE, NO.3	102
HANGER, EXHAUST PIPE, NO.4	395
HANGER, TRANSMISSION CASE, NO.1	209
HARNESS SUB-ASSY, WIRING AIR CONDITIONER	656
HEAD SUB-ASSY, CYLINDER	86
HEAD, GEAR SHIFT, NO.1	228
HEAD, GEAR SHIFT, NO.2	228
HEAD, GEAR SHIFT, NO.3	228
HEADLAMP ASSY, LH	556
HEADLAMP ASSY, RH	556

PART NAME	PAGE
HEADLINING ASSY, ROOF	434
HEADREST ASSY, FRONT SEAT	508
HEADREST ASSY, FRONT SEAT	509
HEADREST ASSY, REAR SEAT	509
HEADREST ASSY, REAR SEAT	510
HINGE ASSY, BACK DOOR, LH	472
HINGE ASSY, BACK DOOR, RH	472
HINGE ASSY, FRONT DOOR, LOWER LH	448
HINGE ASSY, FRONT DOOR, LOWER RH	448
HINGE ASSY, FRONT DOOR, UPPER LH	448
HINGE ASSY, FRONT DOOR, UPPER RH	448
HINGE ASSY, HOOD, LH	354
HINGE ASSY, HOOD, RH	354
HINGE ASSY, REAR DOOR, LOWER LH	461
HINGE ASSY, REAR DOOR, LOWER RH	461
HINGE ASSY, REAR DOOR, UPPER LH	461
HINGE ASSY, REAR DOOR, UPPER RH	461
HINGE SUB-ASSY, REAR NO.2 SEAT, LH	503
HINGE SUB-ASSY, REAR NO.2 SEAT, RH	503
HOLDER ASSY, ALTERNATOR BRUSH	176
HOLDER ASSY, STARTER BRUSH	183
HOLDER, ALTERNATOR, W/RECTIFIER	176
HOLDER, CARD	379
HOLDER, FUEL TANK FILLER PIPE COVER	547
HOLDER, REMOTE BULB, PARTS	654
HOLDER, REVERSE RESTRICT PIN	230
HOLDER, SWITCH COVER	605
HOLDER, VISOR	528
HOLE SNAP RING (FOR 1WAY CLUTCH)	258
HOOD SUB-ASSY	351
HOOK ASSY, FRONT	72
HOOK SUB-ASSY,REAR	395
HOOK, FLOOR CARPET, NO.2	404
HOOK, TRANSPORT, REAR LH	395
HOOK, TRANSPORT, REAR RH	395
HORN ASSY, HIGH PITCHED	637
HORN ASSY, LOW PITCHED	637
HOSE ASSY, REAR WASHER, NO.1	629
HOSE ASSY, REAR WASHER, NO.2	629
HOSE ASSY, WINDSHIELD WASHER	626
HOSE OR PIPE(FOR RADIATOR RESERVE TANK)	146
HOSE SUB-ASSY, VACUUM	168
HOSE SUB-ASSY, VACUUM(FOR IDLE-UP)	168
HOSE(FOR OIL COOLER INLET)	266
HOSE(FOR OIL COOLER OUTLET)	266
HOSE, AIR CLEANER, NO.1	164
HOSE, AIR CLEANER, NO.2	164
HOSE, CHARCOAL CANISTER	550
HOSE, CHARCOAL CANISTER	550
HOSE, CHARCOAL CANISTER OUTLET	550

PART NAME	PAGE
HOSE, CHARCOAL CANISTER OUTLET, NO.1	550
HOSE, CLUTCH, NO.1	197
HOSE, CLUTCH, NO.2	197
HOSE, COOLER REFRIGERANT DISCHARGE, NO.1	668
HOSE, COOLER UNIT DRAIN, NO.1	654
HOSE, DRAIN COOLER	654
HOSE, DRAIN COOLER	654
HOSE, FLEXIBLE(FOR REAR BRAKE TUBE)	318
HOSE, FLEXIBLE, NO.1(FOR FRONT)	318
HOSE, FLEXIBLE, NO.2(FOR FRONT)	318
HOSE, FUEL	168
HOSE, FUEL	547
HOSE, FUEL EMISSION	547
HOSE, FUEL TANK BREATHER	547
HOSE, FUEL TANK BREATHER	548
HOSE, FUEL TANK TO FILLER PIPE	547
HOSE, FUEL VAPOR FEED, NO.2	168
HOSE, NO.2(FOR RADIATOR RESERVE TANK)	146
HOSE, RADIATOR(FOR RADIATOR PIPE)	148
HOSE, RADIATOR, NO.1	146
HOSE, RADIATOR, NO.1	147
HOSE, RADIATOR, NO.2	147
HOSE, RADIATOR, NO.3	147
HOSE, RADIATOR, NO.4	147
HOSE, REAR WASHER (FROM JOINT TO JOINT)	630
HOSE, REAR WASHER (FROM JOINT TO JOINT), NO.1	630
HOSE, REAR WASHER (FROM JOINT TO JOINT), NO.2	630
HOSE, REAR WASHER (FROM JOINT TO JOINT), NO.3	630
HOSE, REAR WASHER (FROM JOINT TO JOINT), NO.4	630
HOSE, REAR WASHER (FROM JOINT TO NOZZLE)	630
HOSE, SUCTION	668
HOSE, VACUUM, NO.1	304
HOSE, VENTILATION	107
HOSE, VENTILATION, NO.2	107
HOSE, VENTILATION, NO.2	108
HOSE, WASHER	625
HOSE, WATER BY-PASS	143
HOSE, WATER BY-PASS, NO.1	143
HOSE, WATER BY-PASS, NO.3	143
HOSE, WATER BY-PASS, NO.4	144
HOSE, WATER BY-PASS, NO.5	144
HOSE, WATER BY-PASS, NO.6	144
HOSE, WINDSHIELD WASHER (FROM JOINT TO JOINT)	626
HOSE, WINDSHIELD WASHER (FROM JOINT TO JOINT), NO.1	626
HOSE, WINDSHIELD WASHER (FROM JOINT TO JOINT), NO.2	626
HOSE, WINDSHIELD WASHER (FROM JOINT TO JOINT), NO.3	626
HOSE, WINDSHIELD WASHER (FROM JOINT TO NOZZLE)	626
HOSE, WINDSHIELD WASHER (FROM JOINT TO TANK)	626
HOSE, WINDSHIELD WASHER (FROM MOTOR TO JOINT)	626
HOUSING ASSY, REAR AXLE	280

PART NAME	PAGE
HOUSING ASSY, STARTER DRIVE	182
HOUSING SUB-ASSY, CAMSHAFT	86
HOUSING SUB-ASSY, EXTENSION (ATM)	248
HOUSING SUB-ASSY, EXTENSION(MTM)	211
HOUSING, CLUTCH	208
HOUSING, STEERING COLUMN	289
HUB ASSY, SYNCHRONIZER, NO.1	221
HUB ASSY, SYNCHRONIZER, NO.2	222
HUB ASSY, SYNCHRONIZER, NO.3	223
HUB SUB-ASSY, FRONT AXLE, LH	286
HUB SUB-ASSY, FRONT AXLE, RH	286
HUB SUB-ASSY, MAGNET CLUTCH	673
HUB, FORWARD CLUTCH, NO.1	256
IDLER SUB-ASSY, TIMING BELT, NO.1	116
INJECTOR ASSY, FUEL	188
INLET ASSY, AIR CLEANER	163
INLET, AIR CLEANER, NO.1	163
INLET, WATER	144
INSERT, FRONT BUMPER GUARD, LOWER LH	343
INSERT, FRONT BUMPER GUARD, LOWER RH	343
INSULATOR ASSY, DASH PANEL	364
INSULATOR ASSY, DASH PANEL	365
INSULATOR, COWL TOP PANEL, NO.1	365
INSULATOR, DASH PANEL, OUTER	365
INSULATOR, ENGINE MOUNTING, FRONT	105
INSULATOR, ENGINE MOUNTING, FRONT LH	105
INSULATOR, ENGINE MOUNTING, REAR NO.1	105
INSULATOR, EXHAUST MANIFOLD HEAT, NO.1	153
INSULATOR, EXHAUST MANIFOLD HEAT, NO.2	153
INSULATOR, FLOOR HEAT, NO.1	399
INSULATOR, FRONT COIL SPRING, UPPER LH	325
INSULATOR, FRONT COIL SPRING, UPPER RH	325
INSULATOR, FUEL PIPE	189
INSULATOR, HOOD	351
INSULATOR, INJECTOR VIBRATION	188
INSULATOR, REAR FLOOR HEAT, NO.1	399
JACK ASSY	71
JAR ASSY, WINDSHIELD WASHER	625
JOINT, ELBOW NO.2	626
JOINT, REAR WASHER ELBOW, NO.1	629
JOINT, REAR WASHER ELBOW, NO.6	629
JOINT, REAR WASHER HOSE, NO.1	629
JOINT, REAR WASHER HOSE, NO.2	629
JOINT, REAR WASHER HOSE, NO.3	629
JOINT, WATER HOSE	143
JOINT, WINDSHIELD WASHER HOSE, NO.1	625
JOINT, WINDSHIELD WASHER HOSE, NO.2	625
JOINT, WINDSHIELD WASHER HOSE, NO.2	625
KEY(FOR CRANKSHAFT TIMING GEAR)	114
KEY, BLANK	478

PART NAME	PAGE
KEY, CRANKSHAFT(FOR CRANKSHAFT PULLEY SET)	113
KEY, SYNCHROMESH SHIFTING, NO.1	221
KEY, SYNCHROMESH SHIFTING, NO.1	222
KEY, SYNCHROMESH SHIFTING, NO.2	222
KNOB SUB-ASSY, SHIFT LEVER	234
KNOB, COOLER CONTROL SWITCH	663
KNOB, PARKING BRAKE RELEASE ROD	296
KNOB, REAR SEAT LOCK HANDLE	513
KNOB, REAR SEAT LOCK HANDLE	513
KNOB, REAR SEAT LOCK HANDLE	513
KNOB, SEAT TRACK ADJUSTING HANDLE	512
KNOB, SEAT TRACK ADJUSTING HANDLE, LH	512
KNOB, SEAT TRACK ADJUSTING HANDLE, RH	512
KNUCKLE, STEERING, LH	321
KNUCKLE, STEERING, LH	322
KNUCKLE, STEERING, RH	321
LABEL, CAUTION	169
LABEL, ENGINE SERVICE INFORMATION	532
LABEL, JACK CAUTION	71
LABEL, JACK CAUTION	71
LABEL, PASSENGER AIR BAG CAUTION	532
LABEL, PASSENGER AIR BAG CAUTION	533
LABEL, SAFETY CAUTION	532
LABEL, TIRE PRESSURE INFORMATION	533
LABEL, TUNE-UP SPECIFICATION INFORMATION	532
LAMP ASSY, FOG, LH	558
LAMP ASSY, FOG, RH	558
LAMP ASSY, LICENSE PLATE	562
LAMP ASSY, MAP	565
LAMP ASSY, REAR COMBINATION, LH	561
LAMP ASSY, REAR COMBINATION, RH	560
LAMP ASSY, ROOM, NO.2	564
LAMP UNIT, FOG LAMP, LH	558
LAMP UNIT, FOG LAMP, RH	558
LEG SUB-ASSY, NO.2 SEAT, LH	517
LEG SUB-ASSY, NO.2 SEAT, REAR	517
LEG SUB-ASSY, NO.2 SEAT, RH	517
LEG SUB-ASSY, REAR SEAT, REAR LH	503
LEG SUB-ASSY, REAR SEAT, RH	503
LENS & BODY, REAR COMBINATION LAMP, LH	561
LENS & BODY, REAR COMBINATION LAMP, RH	561
LENS, ROOM LAMP, NO.2	564
LEVER ASSY, PARKING BRAKE	296
LEVER SUB-ASSY, FUEL LID LOCK OPEN	549
LEVER SUB-ASSY, MANUAL VALVE	263
LEVER SUB-ASSY, PARKING BRAKE SHOE, LH (FOR REAR BRAKE)	312
LEVER SUB-ASSY, PARKING BRAKE SHOE, LH (FOR REAR BRAKE)	313
LEVER SUB-ASSY, PARKING BRAKE SHOE, RH(FOR REAR BRAKE)	312
LEVER SUB-ASSY, PARKING LOCK W/ROLLER	263
LEVER SUB-ASSY, SELECT (FOR FLOOR SHIFT)	235

PART NAME	PAGE
LEVER SUB-ASSY, SHIFT(FOR FLOOR SHIFT)	234
LEVER, REAR BRAKE AUTOMATIC ADJUST, LH	313
LEVER, REAR BRAKE AUTOMATIC ADJUST, RH	313
LEVER, SELECT INNER	229
LEVER, SHIFT, INNER NO.1	229
LEVER, STARTER PINION DRIVE	182
LEVER,TRANSMISSION CONTROL SHAFT	263
LID SUB-ASSY, FUEL FILLER OPENING	549
LIFTER, VALVE	119
LIFTER, VALVE	120
LIFTER, VALVE	121
LINER, FRONT FENDER, LH	352
LINER, FRONT FENDER, RH	352
LINER, REAR WHEEL HOUSE, LH	436
LINER, REAR WHEEL HOUSE, RH	436
LINK ASSY, FRONT STABILIZER, LH	327
LINK ASSY, FRONT STABILIZER, RH	327
LINK ASSY, WINDSHIELD WIPER	620
LINK, FRONT DOOR LOCK REMOTE CONTROL, LH	447
LINK, FRONT DOOR LOCK REMOTE CONTROL, RH	447
LOCK ASSY, BACK DOOR	473
LOCK ASSY, FRONT DOOR, LH	446
LOCK ASSY, FRONT DOOR, RH	446
LOCK ASSY, GLOVE COMPARTMENT DOOR	378
LOCK ASSY, HOOD	355
LOCK ASSY, REAR DOOR, LH	459
LOCK ASSY, REAR DOOR, RH	459
LOCK ASSY, REAR SEAT CUSHION	512
LOCK ASSY, REAR SEAT CUSHION, LH	513
LOCK ASSY, REAR SEAT CUSHION, NO.2 LH	513
LOCK ASSY, REAR SEAT CUSHION, NO.2 LH	514
LOCK ASSY, REAR SEAT CUSHION, NO.2 RH	513
LOCK ASSY, REAR SEAT CUSHION, RH	513
LOCK, REAR DIFFERENTIAL BEARING ADJUSTING NUT	278
LOCK, VALVE SPRING RETAINER	119
LOUVER SUB-ASSY, COWL TOP VENTILATOR	381
MAGNET, TRANSAXLE	244
MAGNET, TRANSMISSION	209
MANIFOLD, EXHAUST	153
MANIFOLD, INTAKE	153
MASTER SWITCH ASSY, POWER WINDOW REGULATOR	605
MASTER SWITCH ASSY, POWER WINDOW REGULATOR	606
MEMBER SUB-ASSY, CENTER FLOOR CROSS, NO.1	395
MEMBER SUB-ASSY, CENTER FLOOR CROSS, NO.1	396
MEMBER SUB-ASSY, ENGINE REAR SUPPORT	338
MEMBER SUB-ASSY, FLOOR SIDE, INNER LH	391
MEMBER SUB-ASSY, FLOOR SIDE, INNER RH	391
MEMBER SUB-ASSY, FRONT CROSS	365
MEMBER SUB-ASSY, FRONT FLOOR CROSS, LH	388
MEMBER SUB-ASSY, FRONT FLOOR CROSS, RH	388

PART NAME	PAGE
MEMBER SUB-ASSY, FRONT SIDE, LH	388
MEMBER SUB-ASSY, FRONT SIDE, RH	388
MEMBER SUB-ASSY, REAR FLOOR CROSS, NO.2	396
MEMBER SUB-ASSY, REAR FLOOR CROSS, NO.3	396
MEMBER SUB-ASSY, REAR FLOOR CROSS, NO.4	396
MEMBER SUB-ASSY, REAR FLOOR SIDE, FRONT LH	396
MEMBER SUB-ASSY, REAR FLOOR SIDE, FRONT RH	396
MEMBER, FRONT APRON TO COWL SIDE, LOWER FRONT LH	363
MEMBER, FRONT APRON TO COWL SIDE, LOWER FRONT RH	363
MEMBER, FRONT APRON TO COWL SIDE, LOWER LH	363
MEMBER, FRONT APRON TO COWL SIDE, LOWER RH	363
MEMBER, FRONT FLOOR, LH	390
MEMBER, FRONT SIDE, LH	388
MEMBER, FRONT SIDE, RH	388
MEMBER, REAR FLOOR CROOS, NO.5	396
MEMBER, REAR FLOOR SIDE, REAR RH	396
MEMBER, REAR FLOOR, CENTER NO.1	396
METER ASSY, COMBINATION	585
METER SUB-ASSY, INTAKE AIR FLOW	164
MIRROR ASSY, INNER REAR VIEW	641
MIRROR ASSY, OUTER REAR VIEW, LH	641
MIRROR ASSY, OUTER REAR VIEW, LH	642
MIRROR ASSY, OUTER REAR VIEW, RH	641
MIRROR, OUTER REAR VIEW, LH	642
MIRROR, OUTER REAR VIEW, RH	641
MODULE SET, TRANSMITTER SUB-ASSY, DOOR CONTROL	478
MOTOR & PUMP ASSY, WASHER	625
MOTOR AND PUMP ASSY, WINDSHIELD WASHER	625
MOTOR ASSY, BLOWER	655
MOTOR ASSY, POWER WINDOW REGULATOR, LH	449
MOTOR ASSY, POWER WINDOW REGULATOR, LH	462
MOTOR ASSY, POWER WINDOW REGULATOR, RH	449
MOTOR ASSY, POWER WINDOW REGULATOR, RH	462
MOTOR ASSY, REAR WASHER	629
MOTOR ASSY, REAR WIPER	622
MOTOR ASSY, WINDSHIELD WIPER	620
MOTOR SET, POWER STEERING	289
MOTOR, COOLING FAN	145
MOULDING, FRONT BUMPER SIDE, LH	343
MOULDING, FRONT BUMPER SIDE, RH	343
MOULDING, QUARTER WINDOW, OUTSIDE FRONT LH	538
MOULDING, QUARTER WINDOW, OUTSIDE FRONT RH	538
MOULDING, RADIATOR GRILLE	349
MOULDING, RADIATOR GRILLE, LOWER	343
MOULDING, REAR BUMPER SIDE, LH	347
MOULDING, REAR BUMPER SIDE, RH	347
MOULDING, ROOF DRIP SIDE FINISH, LH	538
MOULDING, ROOF DRIP SIDE FINISH, RH	538
MOULDING, WINDSHIELD, OUTSIDE	538
MOUNTING, FRONT DISC BRAKE CYLINDER, LH	308

PART NAME	PAGE
MOUNTING, FRONT DISC BRAKE CYLINDER, RH	308
NOZZLE SUB-ASSY, OIL, NO.1	99
NOZZLE SUB-ASSY, WASHER	625
NOZZLE, REAR WASHER	629
NUT	122
NUT (FOR FRONT WIPER ARM SETTING)	620
NUT (FOR MANUAL TRANSMISSION OUTPUT SHAFT REAR SET)	217
NUT (FOR REAR WIPER ARM SETTING)	622
NUT (FOR STEERING KNUCKLE LH)	322
NUT (FOR STEERING KNUCKLE RH)	321
NUT OR COLLAR, PINION STOP, STARTER	183
NUT(FOR FRONT STABILIZER LINK)	327
NUT(FOR FRONT SUPPORT TO FRONT SHOCK ABSORBER LH)	326
NUT(FOR FRONT SUPPORT TO FRONT SHOCK ABSORBER RH)	326
NUT(FOR FRONT SUSPENSION LOWER ARM NO.1 LH)	323
NUT(FOR FRONT SUSPENSION LOWER ARM NO.1 RH)	322
NUT(FOR REAR UPPER CONTROL ARM)	333
NUT, BOOSTER SLEEVE CYLINDER	304
NUT, BRAKE MASTER CYLINDER	302
NUT, CAP(FOR CYLINDER HEAD COVER)	88
NUT, HEXAGON(FOR CONNECTING ROD BOLT)	112
NUT, HUB (FOR AXLE)	285
NUT, NO.1(FOR REAR LOWER CONTROL ARM)	331
NUT, NO.1(FOR REAR UPPER CONTROL ARM LH)	334
NUT, NO.1(FOR REAR UPPER CONTROL ARM RH)	333
NUT, NO.2(FOR REAR LOWER CONTROL ARM)	331
NUT, REAR DIFFERENTIAL BEARING ADJUSTING	278
NUT, SHOCK ABSORBER PISTON	326
NUT, STEERING WHEEL SET	291
NUT, WING (FOR BATTERY CLAMP BOLT)	531
NUT, WIRE ADJUSTING, NO.1	297
O RING, CAM POSITION SENSOR	86
O RING, CRANK POSITION SENSOR	101
ORIFICE ASSY, CLUTCH	198
ORIFICE, CYLINDER BLOCK OIL	98
ORIFICE, CYLINDER HEAD OIL	89
ORIFICE, WATER	148
ORNAMENT SUB-ASSY, WHEEL HUB	285
OUTRIGGER SUB-ASSY, NO.1 LH	390
OUTRIGGER SUB-ASSY, NO.1 RH	390
OUTRIGGER, NO.2 FRONT LH	395
OUTRIGGER, NO.2 FRONT RH	390
OUTRIGGER, NO.2 FRONT RH	395
OUTRIGGER, NO.3 LH	395
OUTRIGGER, NO.3 RH	395
PACKING	670
PACKING (FOR COOLER)	656
PACKING(FOR RADIATOR DRAIN COCK)	145
PACKING, BACK DOOR HINGE	472
PACKING, COOLING UNIT, NO.1	655

PART NAME	PAGE
PACKING, COOLING UNIT, NO.2	655
PACKING, COOLING UNIT, NO.3	655
PACKING, COOLING UNIT, NO.4	656
PAD KIT, DISC BRAKE, FRONT	307
PAD SUB-ASSY, NO.3 SEAT BACK, LH	516
PAD SUB-ASSY, NO.3 SEAT BACK, RH	516
PAD SUB-ASSY, NO.3 SEAT CUSHION, RH	516
PAD, AIR DUCT	663
PAD, AIR DUCT, NO.2	663
PAD, AIR DUCT, NO.5	663
PAD, BRAKE PEDAL	299
PAD, CLUTCH PEDAL	197
PAD, DOOR CYLINDER	478
PAD, FRONT SEAT BACK SILENCER, A	505
PAD, FRONT SEAT BACK, LH(FOR SEPARATE TYPE)	505
PAD, FRONT SEAT BACK, RH(FOR SEPARATE TYPE)	505
PAD, FRONT SEAT CUSHION, LH (FOR SEPARATE TYPE)	505
PAD, FRONT SEAT CUSHION, RH(FOR SEPARATE TYPE)	505
PAD, INSTRUMENT PANEL SAFETY, NO.1	375
PAD, INSTRUMENT PANEL SAFETY, NO.2	375
PAD, INSTRUMENT PANEL SAFETY, NO.2	376
PAD, REAR FLOOR	398
PAD, REAR NO.2 SEAT CUSHION	506
PAD, REAR NO.2 SEAT CUSHION, A	506
PAD, REAR SEAT BACK SILENCER, A	507
PAD, REAR SEAT BACK SILENCER, B	507
PAD, REAR SEAT BACK, LH(FOR SEPARATE TYPE)	506
PAD, REAR SEAT BACK, RH(FOR SEPARATE TYPE)	506
PAD, REAR SEAT CUSHION SILENCER, A	506
PAD, REAR SEAT CUSHION SILENCER, B	506
PAD, REAR SEAT CUSHION, LH	506
PAD, REAR SEAT CUSHION, RH	505
PAD, REAR SEAT CUSHION, RH	506
PAD, ROOF HEADLINING, NO.2	435
PAD,FRONT SEAT CUSHION SILENCER	505
PAN SUB-ASSY, AUTOMATIC TRANSMISSION OIL	245
PAN SUB-ASSY, OIL	98
PAN, FRONT FLOOR	391
PAN, OIL NO.2	99
PAN, REAR FLOOR	398
PANEL ASSY, BACK DOOR TRIM	469
PANEL ASSY, DECK TRIM SIDE, LH	432
PANEL ASSY, DECK TRIM SIDE, RH	432
PANEL ASSY, INSTRUMENT CLUSTER FINISH, CENTER	375
PANEL ASSY, QUARTER TRIM, FRONT LH	431
PANEL ASSY, QUARTER TRIM, FRONT RH	431
PANEL SUB-ASSY, BACK DOOR	469
PANEL SUB-ASSY, BODY LOWER BACK	397
PANEL SUB-ASSY, BODY LOWER BACK, INNER	397
PANEL SUB-ASSY, BODY LOWER BACK, INNER	398

PART NAME	PAGE
PANEL SUB-ASSY, CONSOLE, UPPER	408
PANEL SUB-ASSY, COWL TOP, INNER	380
PANEL SUB-ASSY, DASH	364
PANEL SUB-ASSY, FRONT DOOR, LH	438
PANEL SUB-ASSY, FRONT DOOR, RH	438
PANEL SUB-ASSY, INSTRUMENT	373
PANEL SUB-ASSY, REAR DOOR, LH	452
PANEL SUB-ASSY, REAR DOOR, RH	452
PANEL SUB-ASSY, ROOF SIDE, INNER LH	417
PANEL SUB-ASSY, ROOF SIDE, INNER RH	417
PANEL, CONSOLE	408
PANEL, COWL SIDE, OUTER LH	382
PANEL, COWL SIDE, OUTER RH	381
PANEL, COWL TOP SIDE, LH	381
PANEL, COWL TOP SIDE, RH	380
PANEL, COWL TOP SIDE, RH	381
PANEL, COWL TOP, OUTER	380
PANEL, FRONT DOOR, OUTER LH	438
PANEL, FRONT DOOR, OUTER RH	438
PANEL, INSTRUMENT CLUSTER FINISH, CENTER	375
PANEL, INSTRUMENT CLUSTER FINISH, CENTER UPPER	375
PANEL, INSTRUMENT CLUSTER FINISH, NO.1	374
PANEL, INSTRUMENT CLUSTER FINISH, NO.1	375
PANEL, INSTRUMENT PANEL FINISH, LOWER	375
PANEL, INSTRUMENT, LOWER	373
PANEL, QUARTER WHEEL HOUSE, INNER LH	417
PANEL, QUARTER WHEEL HOUSE, INNER RH	416
PANEL, QUARTER WHEEL HOUSE, INNER RH	417
PANEL, QUARTER WHEEL HOUSE, OUTER LH	416
PANEL, QUARTER WHEEL HOUSE, OUTER RH	416
PANEL, QUARTER, LH	416
PANEL, QUARTER, RH	416
PANEL, RADIO RECEIVER	632
PANEL, REAR CONSOLE, UPPER	409
PANEL, REAR DOOR, OUTER LH	452
PANEL, REAR DOOR, OUTER RH	452
PANEL, ROCKER, INNER LH	415
PANEL, ROCKER, INNER RH	415
PANEL, ROCKER, OUTER LH	415
PANEL, ROCKER, OUTER RH	415
PANEL, ROOF	423
PANEL, ROOF SIDE, INNER LH	418
PANEL, ROOF SIDE, INNER REAR RH	418
PANEL, ROOF SIDE, INNER RH	418
PANEL, WINDSHIELD HEADER, INNER	423
PATCH, INSTRUMENT PANEL	374
PAWL, PARKING LOCK	263
PEDAL ASSY, ACCELERATOR	552
PEDAL SUB-ASSY, BRAKE	299
PEDAL SUB-ASSY, CLUTCH	196

PART NAME	PAGE
PILLAR SUB-ASSY, FRONT BODY, INNER LH	413
PILLAR SUB-ASSY, FRONT BODY, INNER RH	413
PILLAR SUB-ASSY, FRONT, LH	413
PILLAR SUB-ASSY, FRONT, RH	413
PILLAR, CENTER BODY, INNER LH	415
PILLAR, CENTER BODY, INNER RH	414
PILLAR, CENTER BODY, OUTER LH	414
PILLAR, CENTER BODY, OUTER RH	414
PILLAR, FRONT BODY, OUTER LH	413
PILLAR, FRONT BODY, OUTER LH	414
PILLAR, FRONT BODY, OUTER RH	413
PIN	124
PIN(FOR PUSH ROD)	299
PIN, FRONT DISC BRAKE CYLINDER SLIDE	307
PIN, FRONT DISC BRAKE CYLINDER SLIDE, NO.2	308
PIN, PARKING BRAKE LEVER	313
PIN, PISTON	112
PIN, QUARTER WINDOW GUIDE PIECE, NO.1	422
PIN, REVERSE RESTRICT, NO.2	230
PIN, RING	87
PIN, RING	102
PIN, RING (FOR CONTROL SHAFT COVER SET BOLT)	230
PIN, RING (FOR CONTROL SHAFT COVER SET BOLT)	231
PIN, RING (FOR CYLINDER HEAD SET)	98
PIN, RING W/HEAD	88
PIN, RING(FOR CAMSHAFT BEARING CAP SETTING)	88
PIN, RING(FOR CYLINDER BLOCK NO.1)	97
PIN, RING(FOR CYLINDER BLOCK NO.2)	97
PIN, STRAIGHT (FOR OIL PUMP SET)	124
PIN, STRAIGHT(FOR BRAKE MASTER CYLINDER)	301
PIN, STRAIGHT(FOR BRAKE MASTER CYLINDER)	302
PIN, STRAIGHT(FOR CLUTCH HOUSING SET)	97
PIN, STRAIGHT(FOR CRANKSHAFT)	113
PIN, STRAIGHT(FOR FLYWHEEL)	112
PIN, STRAIGHT(FOR FLYWHEEL)	113
PIN, STRAIGHT(FOR TIMING CHAIN COVER)	102
PIN, STRAIGHT(FOR TIMING GEAR COVER SET)	97
PINION, REAR DIFFERENTIAL	278
PINION, STARTER IDLE GEAR	184
PIPE ASSY, EXHAUST, FRONT	159
PIPE ASSY, EXHAUST, TAIL	159
PIPE ASSY, OIL	128
PIPE SUB-ASSY, FUEL DELIVERY	189
PIPE SUB-ASSY, FUEL TANK INLET	546
PIPE SUB-ASSY, RADIATOR	146
PIPE, COOLER REFRIGERANT LIQUID, A	668
PIPE, COOLER REFRIGERANT LIQUID, B	668
PIPE, COOLER REFRIGERANT LIQUID, C	668
PIPE, COOLER REFRIGERANT LIQUID, C	669
PIPE, FUEL DELIVERY	189

PART NAME	PAGE
PIPE, FUEL, NO.1	189
PIPE, WATER BY-PASS, NO.1	143
PIPE, WATER INLET	144
PIPE, WATER OUTLET, NO.1	144
PISTON SUB-ASSY, W/PIN	111
PISTON SUB-ASSY, W/PIN	112
PISTON, 2ND BRAKE	254
PISTON, FRONT DISC BRAKE	308
PISTON,1ST & REVERSE BRAKE	256
PLATE ASSY, FRONT DOOR LOCK STRIKER	446
PLATE ASSY, REAR DOOR LOCK STRIKER	459
PLATE COVER	145
PLATE SUB-ASSY, BRAKE BACKING, REAR LH	312
PLATE SUB-ASSY, BRAKE BACKING, REAR RH	311
PLATE(FOR FRONT DOOR LOCK INSIDE HANDLE)	444
PLATE(FOR FRONT DOOR LOCK INSIDE HANDLE)	445
PLATE(FOR PUMP IMPELLER DRIVE PLATE)	239
PLATE(FOR REAR DOOR LOCK INSIDE HANDLE)	457
PLATE(FOR REAR DOOR LOCK INSIDE HANDLE)	458
PLATE, BACK DOOR NAME	535
PLATE, BACK DOOR NAME, NO.3	535
PLATE, BACK DOOR NAME, NO.4	536
PLATE, BACK DOOR SCUFF	405
PLATE, BEARING LOCK	218
PLATE, BEARING LOCK	219
PLATE, BRAKE	254
PLATE, BRAKE	255
PLATE, CAUTION	532
PLATE, CLUTCH, NO.2	252
PLATE, CLUTCH, NO.3	252
PLATE, CRANK ANGLE SENSOR, NO.1	114
PLATE, ENGINE CAUTION	169
PLATE, ENGINE OIL CAUTION	169
PLATE, ENGINE SYSTEM	169
PLATE, FRONT SEAT CUSHION COVER SET	502
PLATE, FRONT APRON TO COWL SIDE MEMBER, LH	363
PLATE, FRONT APRON TO COWL SIDE MEMBER, RH	363
PLATE, FRONT DOOR SCUFF, LH	432
PLATE, FRONT DOOR SCUFF, RH	432
PLATE, FRONT FENDER EXTENSION, LH	352
PLATE, FRONT FENDER EXTENSION, RH	352
PLATE, FRONT SIDE MEMBER, REAR LH	389
PLATE, FRONT SIDE MEMBER, REAR RH	389
PLATE, GEAR OIL	211
PLATE, HORN CONTACT	604
PLATE, IDLER PULLEY COVER	148
PLATE, LUGGAGE COMPARTMENT DOOR, NO.3	535
PLATE, LUGGAGE COMPARTMENT DOOR, NO.3	536
PLATE, MAT SET, LOWER	405
PLATE, MAT SET, UPPER	405

PART NAME	PAGE
PLATE, OIL PAN BAFFLE, NO.1	99
PLATE, OIL PAN BAFFLE, NO.2	99
PLATE, RADIATOR GRILLE FINISH, LH	350
PLATE, RADIATOR GRILLE FINISH, RH	350
PLATE, REAR BUMPER, LH	346
PLATE, REAR CLUTCH CUSHION	253
PLATE, REAR COMBINATION LAMP, LH	560
PLATE, REAR COMBINATION LAMP, RH	560
PLATE, REAR DOOR SCUFF, LH	432
PLATE, REAR DOOR SCUFF, RH	432
PLATE, REAR END	102
PLATE, SEAT BELT ANCHORAGE, LH	417
PLATE, SEAT BELT ANCHORAGE, RH	417
PLATE, SHIFT INTER LOCK	229
PLATE, SOLENOID LOCK	261
PLATE, SPEEDMETER LOCK	244
PLATE, STIFFENER, LH(MTM)	209
PLATE, STIFFENER, RH(MTM)	209
PLATE, WATER BY-PASS	148
PLATE,BRAKE	258
PLUG (FOR AUTOMATIC EXTENSION HOUSING)	248
PLUG (FOR REAR AXLE HOUSING DRAIN)	280
PLUG BREATHER, NO.2	280
PLUG KIT, REAR BRAKE	311
PLUG SUB-ASSY, DRAIN (ATM)	245
PLUG(FOR CLUTCH HOUSING)	208
PLUG(FOR FUEL TANK)	546
PLUG(FOR MTM SPEEDOMETER DRIVEN HOLE)	212
PLUG(FOR OIL PAN DRAIN)	98
PLUG(FOR REAR DIFFERENTIAL CARRIER)	272
PLUG(FOR WATER OUTLET HOUSING)	144
PLUG, BLEEDER(FOR DRUM BRAKE, REAR)	312
PLUG, BLEEDER(FOR FRONT DISC BRAKE)	307
PLUG, BREATHER	248
PLUG, BREATHER (FOR REAR AXLE HOUSING)	280
PLUG, HOLE(FOR BACK DOOR PANEL)	469
PLUG, HOLE(FOR FLOOR PAN)	398
PLUG, HOLE(FOR FLOOR PANEL)	392
PLUG, HOLE(FOR FRONT FLOOR CENTER FRONT PANEL)	392
PLUG, MANUAL TRANSMISSION CASE	208
PLUG, NO.1	153
PLUG, NO.2 (FOR TRANSAXLE CASE)	245
PLUG, OIL PAN(FOR OIL COOLER)	99
PLUG, RADIATOR DRAIN COCK	145
PLUG, SPARK	172
PLUG, STRAIGHT(FOR TIMING GEAR COVER)	102
PLUG, TAPER SCREW(FOR OIL FILTER BRACKET)	127
PLUG, TAPER SCREW(FOR OIL PUMP)	124
PLUG, TIGHT, NO.2	87
PLUG, W/HEAD STRAIGHT SCREW	211

PART NAME	PAGE
PLUG, W/HEAD STRAIGHT SCREW(FOR TIMING GEAR CASE)	101
PLUG, W/HEAD STRAIGHT SCREW, NO.1	87
PLUG, W/HEAD TAPER SCREW	131
PLUG, W/HEAD TAPER SCREW, NO.1	87
PLUG, WATER DRAIN COCK(FOR CYLINDER BLOCK)	97
PLUNGER, CHAIN TENSIONER	117
PROTECTOR, BACK DOOR GARNISH MOULDING, UPPER	471
PROTECTOR, BACK DOOR LOCK	473
PROTECTOR, BACK DOOR OUTSIDE GARNISH	471
PROTECTOR, BACK DOOR OUTSIDE GARNISH	471
PROTECTOR, DUST STARTER	183
PROTECTOR, FRONT SEAT CUSHION EDGE, LH	505
PROTECTOR, FRONT SEAT CUSHION EDGE, RH	505
PROTECTOR, FUEL TANK FILLER PIPE	548
PROTECTOR, FUEL TANK, LOWER CENTER	549
PROTECTOR, NO.1	550
PROTECTOR, PARKING BRAKE CABLE JOINT	296
PROTECTOR, WIRING HARNESS	603
PROTECTOR, WIRING HARNESS, NO.1	584
PROTECTOR, WIRING HARNESS, NO.2	584
PULLER, FUSE	602
PULLEY ASSY, IDLER	148
PULLEY SUB-ASSY, IDLER, NO.1	132
PULLEY SUB-ASSY, IDLER, NO.1	148
PULLEY, ALTERNATOR	177
PULLEY, CAMSHAFT TIMING	117
PULLEY, CRANKSHAFT	113
PULLEY, CRANKSHAFT TIMING	114
PULLEY, WATER PUMP	132
PUMP ASSY, ENGINE WATER	131
PUMP ASSY, OIL	124
PUMP, FUEL	545
RADIATOR ASSY	145
RAIL, ROOF SIDE, INNER LH	414
RAIL, ROOF SIDE, INNER RH	414
REFLECTOR ASSY, REFLEX, LH	563
REFLECTOR ASSY, REFLEX, RH	563
REGISTER ASSY, INSTRUMENT PANEL, NO.1	379
REGISTER ASSY, INSTRUMENT PANEL, NO.2	379
REGISTER SUB-ASSY, INSTRUMENT PANEL, NO.2	373
REGISTER SUB-ASSY, INSTRUMENT PANEL, NO.1	373
REGULATOR ASSY, GENERATOR	177
REGULATOR ASSY, OIL	99
REGULATOR SUB-ASSY, FRONT DOOR WINDOW, LH	449
REGULATOR SUB-ASSY, FRONT DOOR WINDOW, RH	448
REGULATOR SUB-ASSY, REAR DOOR WINDOW, LH	462
REGULATOR SUB-ASSY, REAR DOOR WINDOW, RH	461
REINFORCE SUB-ASSY, FRONT BODY PILLAR, LOWER LH	413
REINFORCE SUB-ASSY, FRONT BODY PILLAR, LOWER RH	413
REINFORCE SUB-ASSY, FRONT SIDE MEMBER, NO.5	388

PART NAME	PAGE
REINFORCE, BELT ANCHOR TO QUARTER, INNER LOWER RH	419
REINFORCE, ROOF SIDE, OUTER LH	417
REINFORCE, ROOF SIDE, OUTER LH	418
REINFORCE, ROOF SIDE, OUTER RH	417
REINFORCEMENT SUB-ASSY, BELT ANCHOR, LH	397
REINFORCEMENT SUB-ASSY, BELT ANCHOR, RH	397
REINFORCEMENT SUB-ASSY, CENTER BODY PILLAR, LH	413
REINFORCEMENT SUB-ASSY, CENTER BODY PILLAR, RH	413
REINFORCEMENT SUB-ASSY, FRONT BUMPER	361
REINFORCEMENT SUB-ASSY, FRONT FLOOR CROSS MEMBER, RH	388
REINFORCEMENT SUB-ASSY, QUARTER PANEL, LH	416
REINFORCEMENT SUB-ASSY, QUARTER PANEL, RH	415
REINFORCEMENT SUB-ASSY, REAR NO.1 SEAT LEG, FRONT NO.1	397
REINFORCEMENT, BACK DOOR OPENING, LOWER LH	419
REINFORCEMENT, BACK DOOR OPENING, LOWER RH	419
REINFORCEMENT, BELT ANCHOR TO QUARTER, INNER LOWER LH	419
REINFORCEMENT, BELT ANCHOR, NO.1	397
REINFORCEMENT, BELT ANCHOR, NO.3	397
REINFORCEMENT, BELT ANCHOR, NO.4	397
REINFORCEMENT, BELT ANCHOR, RH	397
REINFORCEMENT, CENTER FLOOR PANEL	392
REINFORCEMENT, CENTER FLOOR PANEL, LH	392
REINFORCEMENT, FRONT BODY PILLAR, UPPER LH	414
REINFORCEMENT, FRONT BODY PILLAR, UPPER RH	414
REINFORCEMENT, FRONT CROSSMEMBER SIDE, RH	390
REINFORCEMENT, FRONT FLOOR, NO.3 LH	391
REINFORCEMENT, FRONT FLOOR, NO.3 RH	391
REINFORCEMENT, FRONT SIDE MEMBER, FRONT LH	390
REINFORCEMENT, FRONT SIDE MEMBER, FRONT RH	390
REINFORCEMENT, FRONT SIDE MEMBER, NO.1 LH	389
REINFORCEMENT, FRONT SIDE MEMBER, NO.1 RH	389
REINFORCEMENT, FRONT SIDE MEMBER, NO.2 LH	389
REINFORCEMENT, FRONT SIDE MEMBER, NO.2 RH	389
REINFORCEMENT, FRONT SIDE MEMBER, REAR LH	389
REINFORCEMENT, FRONT SIDE MEMBER, REAR RH	389
REINFORCEMENT, FUEL TANK FLANGE	546
REINFORCEMENT, FUEL TANK FLANGE, NO.1	546
REINFORCEMENT, FUEL TANK SIDE	546
REINFORCEMENT, INSTRUMENT PANEL	374
REINFORCEMENT, PARKING BRAKE BASE	391
REINFORCEMENT, QUARTER PANEL EXTENSION, LH	418
REINFORCEMENT, REAR NO.2 SEAT LEG, FRONT RH	397
REINFORCEMENT, ROCKER PANEL, LH	415
REINFORCEMENT, ROCKER PANEL, NO.2 RH	415
REINFORCEMENT, ROCKER PANEL, NO.3 RH	415
REINFORCEMENT, ROCKER PANEL, RH	415
REINFORCEMENT, ROOF PANEL, NO.1	423
REINFORCEMENT, ROOF PANEL, NO.2	424
REINFORCEMENT, ROOF PANEL, NO.4	424
REINFORCEMENT, ROOF SIDE, INNER LH	418

PART NAME	PAGE
REINFORCEMENT, ROOF SIDE, INNER LH	419
REINFORCEMENT, ROOF SIDE, INNER REAR, LH	419
REINFORCEMENT, ROOF SIDE, INNER RH	418
RELAY ASSY, HORN	607
RELAY ASSY, STARTER	602
RELAY, ACC	607
RELAY, COMPUTER(FOR EFI)	606
RELAY, DOOR CONTROL	606
RELAY, FOG LAMP	606
RELAY, FUEL PUMP	607
RELAY, HEADLAMP	606
RELAY, HEATER, NO.1	606
RELAY, IGNITION, NO.1	602
RELAY, INTEGRATION NO.1	602
RELAY, INTEGRATION NO.2	602
RELAY, MAGNET-CLUTCH	607
RELAY, RADIATOR FAN	607
RELAY, REAR COOLER	607
RESERVOIR SUB-ASSY, BRAKE MASTER CYLINDER	301
RESISTOR, BLOWER	653
RESISTOR, BLOWER	656
RETAINER SUB-ASSY, DOOR LOCK STRIKER, LH	414
RETAINER SUB-ASSY, DOOR LOCK STRIKER, RH	414
RETAINER(FOR FRONT DOOR WEATHERSTRIP)	440
RETAINER(FOR REAR DOOR WEATHERSTRIP)	453
RETAINER(FOR REAR DOOR WEATHERSTRIP)	454
RETAINER, ADJUSTING BOLT SPRING	313
RETAINER, BACK DOOR GARNISH, NO.1	471
RETAINER, BACK DOOR LOCK CYLINDER	478
RETAINER, BACK DOOR STAY, LH	419
RETAINER, BACK DOOR STAY, LH	420
RETAINER, BACK DOOR STAY, RH	419
RETAINER, CONTROL SHIFT LEVER (FOR FLOOR SHIFT)	235
RETAINER, DOOR WEATHERSTRIP, LH	441
RETAINER, DOOR WEATHERSTRIP, RH	441
RETAINER, ENGINE REAR OIL SEAL	102
RETAINER, FRONT DOOR WEATHERSTRIP, LH	441
RETAINER, FRONT DOOR WEATHERSTRIP, RH	441
RETAINER, FRONT FENDER LINER	352
RETAINER, FRONT FENDER LINER	353
RETAINER, FUEL FILLER OPENING LID LOCK	549
RETAINER, LOCK CYLINDER	478
RETAINER, OIL PUMP RELIEF VALVE	125
RETAINER, OUTPUT SHAFT REAR BEARING(MTM)	209
RETAINER, QUARTER PANEL, RH	419
RETAINER, RADIATOR GRILLE, NO.1	349
RETAINER, RADIATOR GRILLE, NO.2	349
RETAINER, REAR AXLE BEARING, INNER	282
RETAINER, REAR AXLE BEARING, OUTER, LH	282
RETAINER, REAR AXLE BEARING, OUTER, RH	282

PART NAME	PAGE
RETAINER, REAR BUMPER, UPPER LH	346
RETAINER, REAR BUMPER, UPPER LH	347
RETAINER, REAR BUMPER, UPPER RH	346
RETAINER, REAR DOOR WEATHERSTRIP, LH	453
RETAINER, REAR DOOR WEATHERSTRIP, RH	453
RETAINER, ROOF HEADLINING	434
RETAINER, ROOF HEADLINING	435
RETAINER, ROOF HEADLINING	435
RETAINER, SPARE WHEEL CARRIER	340
RETAINER, VALVE SPRING	119
RETURN SPRING SUB-ASSY, 1ST & REVERSE	256
RIM, HEADLAMP, LH	556
RIM, HEADLAMP, RH	556
RING SET, PISTON	111
RING SET, SYNCHRONIZER, NO.2	215
RING, CLUTCH DRUM OIL SEAL	239
RING, CLUTCH DRUM OIL SEAL	240
RING, E (FOR FLOOR SHIFT CONTROL SHAFT)	234
RING, FLYWHEEL SPACER	113
RING, FUEL INLET BOX	549
RING, FUEL INLET BOX	549
RING, HOLE SNAP (FOR 1ST & REVERSE BRAKE FLANGE)	255
RING, HOLE SNAP (FOR FORWARD CLUTCH FLANGE)	253
RING, HOLE SNAP (FOR FRONT AXLE HUB LH)	287
RING, HOLE SNAP (FOR FRONT AXLE HUB RH)	286
RING, HOLE SNAP (FOR REAR CLUTCH FLANGE)	253
RING, HOLE SNAP (FOR REAR MULTIPLE DISC CLUTHC)	253
RING, INPUT SHAFT OIL SEAL	253
RING, O	88
RING, O	98
RING, O	102
RING, O	656
RING, O (FOR 2ND BRAKE PISTON)	254
RING, O (FOR 2ND BRAKE PISTON)	254
RING, O (FOR FRONT OIL PUMP BODY)	239
RING, O (FOR MTM SPEEDOMETER SHAFT SLEEVE)	212
RING, O (FOR OIL STRAINER)	261
RING, O (FOR SPEEDOMETER SENSOR)	603
RING, O (FOR TRANSMISSION OIL FILLER TUBE)	244
RING, O (FOR TRANSMISSION SOLENOID)	611
RING, O(FOR BRAKE MASTER CYLINDER)	301
RING, O(FOR COOLER REFRIGERANT DISCHARGE HOSE)	668
RING, O(FOR COOLER REFRIGERANT LIQUID HOSE)	668
RING, O(FOR COOLER REFRIGERANT LIQUID PIPE)	668
RING, O(FOR COOLER REFRIGERANT SUCTION HOSE)	668
RING, O(FOR COOLER REFRIGERANT SUCTION PIPE)	669
RING, O(FOR COOLER UNIT)	656
RING, O(FOR FUEL DELIVARY PIPE)	189
RING, O(FOR FUEL INJECTOR)	188
RING, O(FOR OIL FILTER BRACKET)	127

PART NAME	PAGE
RING, O(FOR OIL LEVEL GAGE GUIDE)	98
RING, O(FOR OIL LEVEL GAGE)	99
RING, O(FOR OIL PAN)	98
RING, O(FOR OIL PAN)	99
RING, O(FOR OIL PUMP)	124
RING, O(FOR OIL STRAINER)	125
RING, O(FOR TRANSMISSION OIL FILLER TUBE)	244
RING, O(FOR TRANSMISSION REVOLUTION SENSOR)	611
RING, O(FOR WATER PUMP)	131
RING, O, NO.1 (FOR TRANSMISSION 3WAY SOLENOID)	261
RING, O, NO.2 (FOR TRANSMISSION 3WAY SOLENOID)	261
RING, O, NO.2(FOR WATER PUMP)	131
RING, O, NO.2(FOR WATER PUMP)	132
RING, SET(FOR FRONT DISC BRAKE PISTON)	308
RING, SHAFT SNAP (FOR 2ND GEAR)	219
RING, SHAFT SNAP (FOR 3RD REAR)	219
RING, SHAFT SNAP (FOR 3RD REAR)	220
RING, SHAFT SNAP (FOR 3RD REAR)	221
RING, SHAFT SNAP (FOR BRAKE)	254
RING, SHAFT SNAP (FOR FRONT BEARING)	215
RING, SHAFT SNAP (FOR FRONT BEARING)	216
RING, SHAFT SNAP (FOR OUTPUT SHAFT BEARING)	217
RING, SHAFT SNAP (FOR OUTPUT SHAFT CENTER BEARING)	217
RING, SHAFT SNAP (FOR OUTPUT SHAFT CENTER BEARING)	218
RING, SHAFT SNAP(FOR CAMSHAFT SUB GEAR)	117
RING, SNAP	673
RING, SNAP (FOR COMPRESSOR)	673
RING, SNAP(FOR STARTER PINION STOP NUT)	183
RING, SNAP, STARTER CLUTCH HOUSING DISC	183
RING, SYNCHRONIZER, NO.1	222
RING, SYNCHRONIZER, NO.2	222
RING, SYNCHRONIZER, NO.3	222
RING, SYNCHRONIZER, NO.4	222
RING,HOLE SNAP (FOR CLUTCH PLATE)	258
ROD ASSY, ACCELERATOR PEDAL(W/SENSOR)	552
ROD ASSY, REAR LATERAL CONTROL	332
ROD SUB-ASSY, CONNECTING	112
ROD SUB-ASSY, PARKING BRAKE PULL, NO.1	296
ROD SUB-ASSY, PARKING LOCK	263
ROD, FRONT DOOR LOCK OPEN, LH	446
ROD, FRONT DOOR LOCK OPEN, RH	446
ROD, HOOD SUPPORT	354
ROD, HOOD SUPPORT	355
ROD, REAR DOOR LOCK OPEN, LH	459
ROD, REAR DOOR LOCK OPEN, RH	459
ROD, TRANSMISSION CONTROL, 3RD	264
ROTOR ASSY, ALTERNATOR	176
ROTOR SUB-ASSY, MAGNET CLUTCH	672
ROTOR, SKID CONTROL SENSOR	613
ROTOR, SPEED SENSOR	224

PART NAME	PAGE
ROTOR, WATER PUMP	132
RUBBER, REAR WIPER	623
RUBBER, WIPER, LH	620
RUBBER, WIPER, RH	620
RUN, FRONT DOOR GLASS, LH	441
RUN, FRONT DOOR GLASS, RH	441
RUN, REAR DOOR GLASS, LH	454
RUN, REAR DOOR GLASS, RH	454
SCREW, DOOR INSIDE HANDLE	446
SCREW, DOOR INSIDE HANDLE	459
SCREW, OIL CLEANER SET	125
SEAL OR RING, O(FOR VALVE STEM OIL)	118
SEAL SET, WATER PUMP	131
SEAL(FOR CRANKSHAFT)	124
SEAL, BACK DOOR OUTSIDE GARNISH	471
SEAL, BRAKE CYLINDER	245
SEAL, BRAKE CYLINDER	246
SEAL, DASH PANEL	365
SEAL, ENGINE REAR OIL	97
SEAL, ENGINE REAR OIL	102
SEAL, EXHAUST VALVE STEM OIL	118
SEAL, FRONT ASH RECEPTACLE	379
SEAL, FRONT DISC BRAKE CYLINDER PISTON	308
SEAL, HOOD TO COWL TOP	380
SEAL, INSTRUMENT CLUSTER FINISH PANEL, NO.1	376
SEAL, INTAKE VALVE STEM OIL	118
SEAL, OIL (FOR AUTOMATIC TRANSMISSION EXTENSION HOUSING)	248
SEAL, OIL (FOR FRONT OIL PUMP)	239
SEAL, OIL (FOR REAR AXLE SHAFT)	281
SEAL, OIL (FOR REAR DIFFERENTIAL CARRIER)	273
SEAL, OIL(FOR MANUAL TRANSMISSION EXTENSION HOUSING)	211
SEAL, OIL(FOR SHIFT LEVER NO.2 SHAFT)	227
SEAL, OIL(FOR TIMING CHAIN OR BELT COVER)	101
SEAL, OIL(FOR TIMING CHAIN OR BELT COVER)	102
SEAL, OIL(FOR TRANSMISSION CASE)	208
SEAL, OIL(FOR TRANSMISSION CASE)	208
SEAL, OIL(FOR TRANSMISSION CASE)	209
SEAL, REAR DOOR DIVISION BAR, INSIDE, LH	452
SEAL, REAR DOOR DIVISION BAR, INSIDE, RH	452
SEAL, RUBBER	182
SEAL, TYPE T OIL(FOR CAMSHAFT NO.2)	117
SEAL,OIL(FOR MANUAL VALVE)	263
SEAT SUB-ASSY, FRONT SPRING, NO.1	325
SEAT, 1ST & REVERSE BRAKE PISTON RETURN SPRING	256
SEAT, BRAKE RETURN SPRING	254
SEAT, EXHAUST VALVE	88
SEAT, INTAKE VALVE	88
SEAT, REAR SPRING, LOWER	330
SEAT, REAR SPRING, UPPER	330
SEAT, SHIFT DETENT BALL SPRING, NO.1	229

PART NAME	PAGE
SEAT, SHIFT DETENT BALL SPRING, NO.1	230
SEAT, TRANSMISSION SHIFT LEVER BALL	235
SEAT, VALVE SPRING	118
SEAT, VALVE SPRING	119
SEAT, WATER PUMP PULLEY	132
SENSOR ASSY, BATTERY CURRENT	602
SENSOR, AIR BAG, FRONT	617
SENSOR, AIR BAG, FRONT LH	617
SENSOR, AIR BAG, FRONT RH	617
SENSOR, AIR CONDITIONER PRESSURE	669
SENSOR, AIR FUEL RATIO	607
SENSOR, CAM POSITION	86
SENSOR, CRANK POSITION	97
SENSOR, CRANK POSITION	101
SENSOR, KNOCK CONTROL	608
SENSOR, OXYGEN	607
SENSOR, OXYGEN NO.2	607
SENSOR, SPEED, FRONT LH	613
SENSOR, SPEED, FRONT RH	613
SENSOR, SPEED, REAR LH	613
SENSOR, SPEED, REAR RH	613
SENSOR, SPEEDOMETER	603
SENSOR, THROTTLE POSITION	190
SENSOR, TRANSMISSION REVOLUTION	611
SENSOR, VACUUM	607
SENSOR, WATER TEMPERATURE	607
SEPARATOR, TRANSMISSION OIL(MTM)	209
SHAFT ASSY, PROPELLER	267
SHAFT ASSY, PROPELLER, FRONT	268
SHAFT ASSY, PROPELLER, REAR	268
SHAFT ASSY, STEERING INTERMEDIATE	288
SHAFT SUB-ASSY, INTERMEDIATE	257
SHAFT SUB-ASSY, OUTPUT	256
SHAFT SUB-ASSY, SELECT LEVER	227
SHAFT SUB-ASSY, SHIFT LEVER, NO.1	227
SHAFT SUB-ASSY, TRANSMISSION CONTROL INTERMEDIATE	263
SHAFT, BRAKE PEDAL	299
SHAFT, CLUTCH PEDAL	197
SHAFT, GEAR SHIFT FORK, NO.1	228
SHAFT, GEAR SHIFT FORK, NO.2	228
SHAFT, GEAR SHIFT FORK, NO.2	229
SHAFT, GEAR SHIFT FORK, NO.3	229
SHAFT, INPUT	215
SHAFT, MANUAL VALVE LEVER	263
SHAFT, OUTPUT	216
SHAFT, PARKING LOCK PAWL	263
SHAFT, REAR AXLE, LH	281
SHAFT, REAR AXLE, RH	281
SHAFT, REAR DIFFERENTIAL PINION	278
SHAFT, REAR DIFFERENTIAL PINION	279

PART NAME	PAGE
SHAFT, REAR DIFFERENTIAL PINION, NO.2	279
SHAFT, REVERSE IDLER GEAR	224
SHAFT, REVERSE RESTRICT	230
SHEET, HEATER CONTROL NAME, NO.1	662
SHEET, HEATER CONTROL NAME, NO.2	662
SHEET, HEATER CONTROL NAME, NO.2	663
SHIELD, FRONT SEAT CUSHION, LH	507
SHIELD, FRONT SEAT CUSHION, RH	507
SHIELD, FUEL TANK FILLER PIPE, NO.3	548
SHIELD, FUEL TANK FILLER PIPE, NO.3	549
SHIELD, STEERING COLUMN HOLE	289
SHIM (FOR REAR DIFF DRIVE PINION SPACER FRONT ADJUST)	275
SHIM (FOR REAR DIFF DRIVE PINION SPACER FRONT ADJUST)	276
SHIM (FOR REAR DIFF DRIVE PINION SPACER FRONT ADJUST)	277
SHIM KIT, ANTI SQUEAL, FRONT	307
SHOE KIT, REAR BRAKE	311
SHROUD, FAN	148
SILENCER, FRONT FLOOR, NO.1	404
SILENCER, ROOF	435
SILENCER, ROOF, NO.2	434
SILENCER, SEAT SPRING	503
SILENCER, SEAT SPRING	503
SLIDER, FAN BELT ADJUSTING	145
SLINGER, OUTPUT SHAFT OIL	211
SOCKET & WIRE SUB-ASSY, REAR COMBINATION LAMP, LH	561
SOCKET & WIRE SUB-ASSY, REAR COMBINATION LAMP, RH	561
SOCKET AND WIRE, LICENSE PLATE LAMP	562
SOCKET ASSY, POWER OUTLET, NO.1	606
SOCKET, CLEARANCE LAMP	557
SOCKET, FRONT TURN SIGNAL LAMP	556
SOLENOID ASSY, AUTOMATIC TRANSMISSION 3WAY	261
SOLENOID ASSY, CLUTCH CONTROL, NO.1	261
SOLENOID ASSY, CLUTCH CONTROL, NO.2	261
SOLENOID ASSY, LOCK UP CONTROL	261
SOLENOID ASSY, TRANSMISSION	611
SPACER, BACK DOOR GLASS, NO.1	469
SPACER, BACK DOOR TRIM	470
SPACER, CYLINDER BLOCK WATER JACKET	98
SPACER, IDLER PULLEY	148
SPACER, NO.1(FOR DELIVERY PIPE)	189
SPACER, NO.1(FOR FLYWHEEL)	113
SPACER, QUARTER WINDOW GLASS	422
SPACER, REAR DIFFERENTIAL DRIVE PINION BEARING	277
SPACER, SYNCHRONIZER RING	218
SPANNER	71
SPEAKER ASSY, FRONT NO.2	633
SPEAKER ASSY, FRONT NO.3	633
SPIDER KIT, UNIVERSAL JOINT	269
SPIDER, REAR DIFFERENTIAL	279
SPRING ASSY, NO.3 SEAT CUSHION	518

PART NAME	PAGE
SPRING ASSY, REAR SEAT CUSHION, LH	506
SPRING ASSY, REAR SEAT CUSHION, RH	506
SPRING KIT, REAR BRAKE	311
SPRING KIT, REAR BRAKE SHOE HOLD DOWN	311
SPRING SUB-ASSY, MANUAL DETENT	263
SPRING(FOR BRAKE PEDAL RETURN)	299
SPRING(FOR CLUTCH PEDAL)	196
SPRING, 2ND & 4TH BRAKE PISTON RETURN	255
SPRING, ACCELERATOR LINK ROD RETURN	552
SPRING, ALTERNATOR BRUSH	177
SPRING, COIL, REAR LH	330
SPRING, COIL, REAR RH	330
SPRING, COMPRESSION (FOR REVERSE RESTRICT PIN)	230
SPRING, COMPRESSION(FOR INNER)	118
SPRING, COMPRESSION(FOR OUTER)	118
SPRING, COMPRESSION(FOR REAR WHEEL BRAKE CYLINDER)	312
SPRING, EXHAUST PIPE	159
SPRING, FRONT COIL, LH	325
SPRING, FRONT COIL, RH	325
SPRING, FUEL FILLER OPENING LID HINGE	549
SPRING, OIL PUMP RELIEF VALVE	125
SPRING, REAR SEAT CUSHION, LH	504
SPRING, REAR SEAT CUSHION, NO.2	504
SPRING, REAR SEAT CUSHION, RH	504
SPRING, RELEASE FORK SUPPORT	193
SPRING, REVERSE SHIFT RESTRICT	228
SPRING, STARTER BRUSH	183
SPRING, SYNCHROMESH SHIFTING KEY, NO.1	223
SPRING, SYNCHROMESH SHIFTING KEY, NO.2	223
SPRING, TORSION (FOR PARKING LOCK PAWL)	263
SPRING, TORSION(FOR SELECT RETURN)	228
SPRING, WAVE	221
SPROCKET ASSY, CAMSHAFT TIMING	117
STARTER ASSY	182
STARTER KIT, REPAIR SERVICE	183
STARTER KIT, REPAIR SERVICE	184
STATOR, MAGNET CLUTCH	672
STAY ASSY, BACK DOOR, LH	472
STAY ASSY, BACK DOOR, LH	473
STAY ASSY, BACK DOOR, RH	472
STAY, INTAKE MANIFOLD	153
STAY, MANIFOLD	153
STAY, SURGE TANK, NO.1	153
STAY, SURGE TANK, NO.2	188
STOPPER, CONTROL LEVER (FOR FLOOR SHIFT)	235
STOPPER, HOOD	353
STOPPER, REAR BUMPER, UPPER	347
STOPPER, WINDSHIELD GLASS	381
STRAINER SUB-ASSY, OIL	125
STRAINER SUB-ASSY, OIL	261

PART NAME	PAGE
STRAINER, BRAKE MASTER CYLINDER RESERVOIR	302
STRIKER ASSY, BACK DOOR LOCK	473
STRIKER, GLOVE COMPARTMENT DOOR LOCK	378
STRIKER, REAR SEAT LEG LOCK	398
STRUT KIT, REAR BRAKE	311
SUB-GEAR, 1ST	223
SUB-GEAR, NO.2	223
SUPPORT ASSY, REAR NO.2 SEAT HEADREST	509
SUPPORT SUB-ASSY, BRAKE PEDAL	300
SUPPORT SUB-ASSY, CLUTCH PEDAL	198
SUPPORT SUB-ASSY, FRONT SUSPENSION	326
SUPPORT SUB-ASSY, HOOD LOCK	361
SUPPORT SUB-ASSY, RADIATOR	361
SUPPORT SUB-ASSY, RADIATOR, LH	361
SUPPORT SUB-ASSY, RADIATOR, LOWER	361
SUPPORT SUB-ASSY, RADIATOR, RH	361
SUPPORT SUB-ASSY, RADIATOR, UPPER	361
SUPPORT, BATTERY CARRIER, RH	364
SUPPORT, CONTROL LINK (FOR FLOOR SHIFT)	235
SUPPORT, CONTROL LINK (FOR FLOOR SHIFT)	236
SUPPORT, EXHAUST PIPE, NO.2	159
SUPPORT, EXHAUST PIPE, NO.3	159
SUPPORT, FRONT ASH RECEPTACLE RETAINER	379
SUPPORT, FRONT BUMPER SIDE, LH	342
SUPPORT, FRONT BUMPER SIDE, RH	342
SUPPORT, FRONT SEAT HEADREST	509
SUPPORT, FRONT SEAT HEADREST	510
SUPPORT, FUEL PIPE	189
SUPPORT, RADIATOR, UPPER LH	361
SUPPORT, RADIATOR, UPPER RH	361
SUPPORT, REAR BUMPER SIDE, LH	346
SUPPORT, REAR BUMPER SIDE, RH	346
SUPPORT, REAR SEAT HEADREST	510
SUPPORT, RELEASE FORK	193
SWITCH ASSY, BACK-UP LAMP	603
SWITCH ASSY, BRAKE WARNING TEST	605
SWITCH ASSY, CLUTCH START	605
SWITCH ASSY, CLUTCH START, NO.2	605
SWITCH ASSY, HAZARD WARNING SIGNAL	604
SWITCH ASSY, HEADLAMP DIMMER	603
SWITCH ASSY, IGNITION OR STARTER	605
SWITCH ASSY, MAGNET STARTER	183
SWITCH ASSY, NEUTRAL START	605
SWITCH ASSY, OIL PRESSURE (FOR ENGINE)	603
SWITCH ASSY, OUTER MIRROR	606
SWITCH ASSY, POWER WINDOW REGULATOR	605
SWITCH ASSY, STEERING PAD	604
SWITCH ASSY, STOP LAMP	604
SWITCH ASSY, VACUUM WARNING	603
SWITCH ASSY, WINDSHIELD WIPER	605

PART NAME	PAGE
SWITCH, COURTESY LAMP	603
SWITCH, COURTESY LAMP	604
SWITCH, ENGINE HOOD	604
SWITCH, HEATER BLOWER	663
SWITCH, INLET AIR TEMPERATURE	607
SWITCH, PRESSURE NO.1	667
SWITCH, PRESSURE NO.1	668
TANK ASSY, FUEL	546
TANK ASSY, RADIATOR RESERVE	146
TAPE, BLACK OUT CENTER PILLAR, LH	420
TAPE, BLACK OUT CENTER PILLAR, RH	420
TAPE, BLACK OUT FRONT DOOR, OUTER REAR LH	443
TAPE, BLACK OUT FRONT DOOR, OUTER REAR RH	442
TAPE, BLACK OUT FRONT DOOR, OUTER REAR RH	443
TAPE, BLACK OUT FRONT DOOR, OUTER UPPER LH	442
TAPE, BLACK OUT FRONT DOOR, OUTER UPPER RH	442
TAPE, BLACK OUT, OUTER FRONT LH	455
TAPE, BLACK OUT, OUTER FRONT RH	455
TAPE, BLACK OUT, OUTER REAR LH	456
TAPE, BLACK OUT, OUTER REAR RH	455
TAPE, BLACK OUT, OUTER REAR RH	456
TAPE, BLACK OUT, OUTER UPPER LH	455
TAPE, BLACK OUT, OUTER UPPER RH	455
TENSIONER ASSY, CHAIN, NO.1	117
TENSIONER ASSY, V-RIBBED BELT	132
THERMISTOR, COOLER, NO.1	656
THERMOSTAT	144
TOOL SET, STANDARD W/O JACK	71
TRACK ASSY, FRONT SEAT, INNER RH	510
TRACK ASSY, FRONT SEAT, OUTER LH	510
TRACK ASSY, FRONT SEAT, OUTER RH	510
TRACK ASSY, FRONT SEAT,INNER LH	511
TRACK ASSY, REAR NO.1 SEAT, INNER LH	512
TRACK ASSY, REAR NO.1 SEAT, INNER RH	511
TRACK ASSY, REAR NO.1 SEAT, OUTER RH	511
TRACK ASSY, REAR SEAT, OUTER LH	511
TRACK ASSY, REAR SEAT, OUTER LH	512
TRANSMISSION ASSY, AUTOMATIC	237
TRANSMISSION UNIT ASSY, MANUAL	202
TRANSMITTER ASSY, DOOR CONTROL	478
TRIM, QUARTER WINDOW INSIDE, LH	430
TRIM, QUARTER WINDOW INSIDE, RH	429
TRIM, REAR DOOR OPENING, LH	429
TRIM, REAR DOOR OPENING, RH	429
TUBE ASSY, FUEL SUCTION W/PUMP & GAGE	545
TUBE SUB-ASSY, FUEL	189
TUBE SUB-ASSY, FUEL SUCTION	546
TUBE SUB-ASSY, FUEL TANK BREATHER, NO.2	545
TUBE SUB-ASSY, FUEL TANK TO CANISTER	545
TUBE SUB-ASSY, LIQUID, F	656

PART NAME	PAGE
TUBE SUB-ASSY, OIL COOLER	266
TUBE SUB-ASSY, TRANSMISSION OIL FILLER	244
TUBE(FOR CYLINDER HEAD)	86
TUBE, CHARCOAL CANISTER OUTLET	550
TUBE, CLUTCH MASTER CYLINDER TO FLEXIBLE HOSE	197
TUBE, CLUTCH RELEASE CYLINDER TO FLEXIBLE HOSE	197
TUBE, EXTENSION HOUSING BUSH APPLY	248
TUBE, FRONT BRAKE, NO.1	317
TUBE, FRONT BRAKE, NO.2	317
TUBE, FRONT BRAKE, NO.2	318
TUBE, FRONT BRAKE, NO.3	318
TUBE, FRONT BRAKE, NO.4	318
TUBE, FUEL MAIN	547
TUBE, FUEL TANK RETURN	547
TUBE, FUEL TANK TO CANISTER, NO.3	547
TUBE, REAR BRAKE, NO.1	318
TUBE, REAR BRAKE, NO.2	319
TUBE, REAR BRAKE, NO.3	319
TUBE, REAR BRAKE, NO.4	319
TUBE, REAR BRAKE, NO.5	319
TUBE, REAR BRAKE, NO.6	319
TUBE, SUCTION, A(FOR COOL BOX)	670
TUBE, SUCTION, NO.2	669
TUBE, SUCTION, NO.2	670
UNION(FOR CYLINDER BLOCK)	97
UNION(FOR OIL FILTER BRACKET)	97
UNION(FOR OIL FILTER)	127
UNIT ASSY, AIR CONDITIONER	653
UNIT ASSY, COOLING, REAR	653
UNIT ASSY, HEADLAMP, LH	556
UNIT ASSY, HEADLAMP, RH	556
VALVE (FOR TUBELESS TIRE SPARE)	285
VALVE (FOR TUBELESS TIRE)	285
VALVE ASSY, CAM TIMING OIL CONTROL	102
VALVE ASSY, CAMSHAFT TIMING OIL CONTROL	86
VALVE ASSY, FUEL CUT OFF	549
VALVE ASSY, PROPORTIONING & BY-PASS	317
VALVE ASSY, VACUUM SWITCHING, NO.1	168
VALVE SUB-ASSY, FUEL TANK FILLER CHECK	546
VALVE SUB-ASSY, VENTILATION	107
VALVE, COOLER EXPANSION	654
VALVE, EXHAUST	118
VALVE, INTAKE	118
VALVE, OIL PUMP RELIEF	125
VALVE, REAR COOLING UNIT EXPANSION	654
VALVE, SERVICE, NO.1	667
VALVE, SERVICE, NO.2	667
VALVE, WINDSHIELD WASHER HOSE	625
VALVE, WINDSHIELD WASHER HOSE	626
VISOR ASSY, LH	528

PART NAME	PAGE
VISOR ASSY, RH	528
WASHER, 1ST GEAR THRUST	221
WASHER, CAMSHAFT TIMING GEAR BOLT	118
WASHER, CRANKSHAFT THRUST, UPPER	111
WASHER, FELT, STARTER	183
WASHER, LATERAL CONTROL ROD CUSHION	333
WASHER, LATERAL CONTROL ROD CUSHION	333
WASHER, NO.1 (FOR PROPELLER SHAFT & DIFFERENTIAL SETTING)	267
WASHER, PLATE (FOR REAR DIFFERENTIAL DRIVE PINION)	273
WASHER, PLATE (FOR REAR DIFFERENTIAL DRIVE PINION)	274
WASHER, PLATE (FOR REAR DIFFERENTIAL DRIVE PINION)	275
WASHER, PLATE (FOR SELECT LEVER SHAFT)	229
WASHER, PLATE(FOR CYLINDER HEAD SET)	86
WASHER, PLATE(FOR LOWER ARM BUSH)	323
WASHER, PLATE, NO.1(FOR REAR LATERAL CONTROL ROD)	332
WASHER, PLATE, NO.2(FOR REAR LATERAL CONTROL ROD)	332
WASHER, REAR DIFFERENTIAL SIDE GEAR THRUST, NO.1	279
WASHER, REVERSE IDLER THRUST	224
WASHER, SEAL(FOR CYLINDER HEAD COVER)	88
WASHER, WAVE(FOR CAMSHAFT SUB GEAR)	117
WATER INLET SUB-ASSY, W/THERMOSTAT	143
WAY, BRAKE TUBE	320
WEATHERSTRIP ASSY, FRONT DOOR GLASS, OUTER LH	442
WEATHERSTRIP ASSY, FRONT DOOR GLASS, OUTER RH	441
WEATHERSTRIP ASSY, FRONT DOOR GLASS, OUTER RH	442
WEATHERSTRIP ASSY, REAR DOOR GLASS, OUTER LH	455
WEATHERSTRIP ASSY, REAR DOOR GLASS, OUTER RH	454
WEATHERSTRIP, BACK DOOR	470
WEATHERSTRIP, FRONT DOOR GLASS, INNER LH	442
WEATHERSTRIP, FRONT DOOR GLASS, INNER RH	442
WEATHERSTRIP, FRONT DOOR OPENING TRIM, LH	429
WEATHERSTRIP, FRONT DOOR OPENING TRIM, RH	429
WEATHERSTRIP, FRONT DOOR, LH	440
WEATHERSTRIP, FRONT DOOR, RH	440
WEATHERSTRIP, REAR DOOR GLASS, INNER LH	454
WEATHERSTRIP, REAR DOOR GLASS, INNER RH	454
WEATHERSTRIP, REAR DOOR, LH	454
WEATHERSTRIP, REAR DOOR, RH	453
WHEEL ASSY, STEERING	291
WHEEL, DISC	284
WHEEL, DISC (FOR SPARE)	284
WHEEL, DISC (FOR SPARE)	285
WIRE SUB-ASSY, HORN BUTTON	291
WIRE, BACK DOOR, NO.1	584
WIRE, BACK DOOR, NO.2	584
WIRE, BODY GROUND	582
WIRE, CLUTCH START SWITCH	602
WIRE, ENGINE	582
WIRE, ENGINE ROOM MAIN	582
WIRE, ENGINE ROOM, NO.2	582

PART NAME	PAGE
WIRE, ENGINE, NO.2	582
WIRE, FLOOR	583
WIRE, FLOOR	584
WIRE, FRONT DOOR, LH	583
WIRE, FRONT DOOR, RH	583
WIRE, FUEL PUMP	584
WIRE, FUSIBLE LINK	584
WIRE, INSTRUMENT PANEL	582
WIRE, INSTRUMENT PANEL	583
WIRE, REAR DOOR, NO.1	583
WIRE, ROOF, NO.1	584
WIRE, SOLENOID	261
WIRE, TRANSMISSION	261
WRENCH, HUB NUT BOX	71
WRENCH, SPARK PLUG	71
WRENCH, SPARK PLUG	72
YOKE ASSY, STARTER	182
YOKE SUB-ASSY, UNIVERSAL JOINT SLEEVE	268
YOKE SUB-ASSY, UNIVERSAL JOINT, CENTER	268
YOKE, UNIVERSAL JOINT FLANGE	268
YOKE, UNIVERSAL JOINT FLANGE	269

04111 - 11322 42
11322 - 13545 43
13545 - 15135 44
15140 - 17771 45
17771 - 31250 46
31250 - 33467 47
33481 - 41110 48
41110 - 47110 49
47110 - 51501 50
51502 - 55311 51
55311 - 57601 52
57602 - 61713 53
61714 - 67608 54
67608 - 69270 55
69270 - 71508 56
71537 - 74451 57
74451 - 79024 58
79024 - 82161 59
82161 - 85374 60
85374 - 88619 61
88625 - 90041 62
90041 - 90045 63
90045 - 9004A 64
9004A - 9004A 65
9004A - 90099 66
90105 - G1406 67

PART NUMBER	PAGE	WEIGHT(g)	PART NUMBER	PAGE	WEIGHT(g)
04111-BZ101-	79	0.00	09141-87Z11-	71	
-BZ102-	79	0.00	09150-87Z01-	71	0.00
-BZ103-	79	0.00	-BZ040-	71	389.00
-BZ107-	79	0.00	09155-BZ010-	71	0.00
-BZ125-	79	0.00	-BZ010-	72	0.00
-BZ126-	79	0.00	-BZ060-	72	0.00
-BZ127-	79	0.00	09158-87Z04-	72	0.00
-BZ751-	79	0.00	11101-B9320-	86	0.00
-BZ752-	79	0.00	-B9620-	86	0.00
-BZ754-	79	0.00	-B9622-	86	8,650.00
-BZ755-	79	0.00	-BZ040-	86	0.00
04112-BZ101-	79	0.00	11103-0Y040-	86	0.00
-BZ102-	79	0.00	11115-0Y030-	87	0.00
-BZ125-	79	0.00	-B0010-	87	0.00
-BZ126-	79	0.00	-B1030-	87	54.00
-BZ127-	79	0.00	11122-31041-	87	16.00
-BZ471-	79	0.00	-47020-	87	16.00
-BZ472-	79	0.00	-BZ010-	87	0.00
04311-B4010-	199	20.00	11123-31041-	87	16.00
04313-14030-	200	30.00	-47020-	87	16.00
04351-B0020-	237	0.00	-BZ010-	87	0.00
-B0021-	237		11124-87203-	87	12.00
-B0030-	237	0.00	11131-47010-	88	8.00
-B0040-	237	0.00	11132-47010-	88	8.00
04371-BZ040-	269	0.00	11135-47010-	88	8.00
04465-BZ010-	307	0.00	11136-47010-	88	9.00
-BZ170-	307	0.00	11159-0Y020-	88	1.00
04474-B1040-	311	0.00	11201-BZ030-	88	0.00
04478-BZ060-	307	0.00	-BZ031-	88	0.00
04493-B1040-	301	0.00	-BZ040-	88	0.00
04495-BZ010-	311	0.00	-BZ100-	88	0.00
-BZ011-	311	0.00	11213-0Y030-	89	0.00
04906-BZ020-	311	0.00	-97202-	89	41.00
04941-BZ050-	311	0.00	-97401-	89	59.00
04942-BZ060-	311	0.00	-BZ010-	89	0.00
04943-BZ040-	311	0.00	-BZ020-	89	0.00
04945-BZ010-	307	0.00	11249-47020-	107	0.00
04947-BZ010-	307	0.00	11288-BZ010-	169	0.00
04949-BZ010-	311	0.00	11293-BZ010-	532	0.00
09101-BZ010-	71	0.00	-BZ020-	532	0.00
-BZ190-	71	0.00	-BZ030-	532	0.00
-BZ280-	71	0.00	-BZ100-	169	0.00
09111-BZ200-	71	0.00	-BZ150-	532	0.00
-BZ201-	71	0.00	-BZ410-	169	0.00
09114-87Z02-	71	0.00	-BZ590-	532	0.00
09119-BZ020-	71	0.00	-BZ640-	532	0.00
-BZ100-	71	0.00	11302-87Z03-	101	0.00
-BZ260-	71	0.00	11310-BZ050-	101	0.00
09125-BZ010-	71	2.00	-BZ130-	101	0.00
09135-87Z10-	71	0.00	11322-B1010-	102	

PART NUMBER	PAGE	WEIGHT(g)
11322-BZ050-	102	
11328-BZ010-	102	0.00
-BZ040-	102	0.00
11355-BZ011-	102	0.00
-BZ021-	102	0.00
11363-BZ010-	97	0.00
11381-97402-	102	
-BZ010-	102	0.00
-BZ020-	102	0.00
11400-BZ390-	75	0.00
-BZD42-	75	0.00
-BZD43-	75	0.00
-BZX20-	75	0.00
-BZX30-	75	0.00
11401-B9350-	97	0.00
-B9500-	97	0.00
11409-BZ100-	98	0.00
-BZ101-	98	0.00
11410-B9010-	97	0.00
-B9020-	97	0.00
11445-0Y020-	98	120.00
11448-87201-	89	
-87201-	98	
-BZ010-	89	0.00
-BZ010-	98	0.00
11452-BZ020-	98	0.00
-BZ050-	98	0.00
11701-0Y030-02	110	33.00
-0Y030-02	111	33.00
-0Y030-03	110	33.00
-0Y030-03	111	33.00
-0Y030-04	110	33.00
-0Y030-04	111	33.00
-0Y030-05	111	33.00
-BZ070-01	110	0.00
-BZ070-02	110	0.00
-BZ070-03	110	0.00
-BZ070-04	110	0.00
-BZ070-05	110	0.00
-BZ070-06	110	0.00
-BZ070-07	110	0.00
-BZ091-02	110	0.00
-BZ091-03	110	0.00
-BZ091-04	110	0.00
-BZ091-05	110	0.00
11704-B2010-	110	130.00
-BZ090-	110	0.00
11791-B0010-	111	16.00
-B1020-	111	
-BZ070-	111	0.00

PART NUMBER	PAGE	WEIGHT(g)
11791-BZ080-	111	
11792-B1020-	111	
-BZ010-	111	0.00
-BZ020-	111	0.00
11793-B1020-	111	
-BZ010-	111	0.00
-BZ020-	111	0.00
12101-97202-	98	1,390.00
-B1040-	98	0.00
-BZ090-	98	0.00
12111-B1040-	99	2,450.00
12121-BZ070-	99	0.00
12122-BZ010-	99	0.00
12180-0H020-	89	0.00
-87Z01-	89	0.00
-97401-	89	
-BZ010-	89	0.00
12195-87Z01-	89	0.00
12204-0Y020-	107	0.00
-97401-	107	14.00
12261-B1010-	107	
-BZ010-	107	0.00
-BZ030-	107	0.00
-BZ030-	108	0.00
-BZ140-	107	0.00
-BZ160-	107	0.00
12262-97401-	107	
-BZ010-	107	0.00
-BZ080-	108	0.00
12281-0Y070-	89	0.00
-97401-	89	256.00
-97402-	89	235.00
-BZ010-	89	0.00
-BZ080-	89	615.00
12282-87215-	89	88.00
-97403-	89	198.00
-97404-	89	194.00
-B1020-	244	13.00
-B5030-	244	11.00
-BZ110-	89	0.00
-BZ140-	89	0.00
-BZ141-	89	480.00
-BZ141-	90	480.00
-BZ150-	89	0.00
12283-BZ030-	102	0.00
12311-BZ010-	105	0.00
-BZ020-	105	0.00
-BZ120-	105	0.00
-BZ130-	105	0.00
12312-BZ010-	105	0.00

PART NUMBER	PAGE	WEIGHT(g)
12312-BZ020-	105	
12315-BZ060-	105	0.00
-BZ070-	105	0.00
12321-BZ110-	237	0.00
-BZ120-	202	0.00
-BZ250-	202	0.00
-BZ260-	237	0.00
12351-BZ040-	105	0.00
12361-BZ130-	105	0.00
-BZ132-	105	0.00
-BZ140-	105	0.00
-BZ141-	105	0.00
-BZ142-	105	0.00
-BZ200-	105	0.00
-BZ220-	105	0.00
12362-BZ110-	105	0.00
-BZ111-	105	0.00
-BZ130-	105	0.00
-BZ131-	105	0.00
12371-BZ110-	105	0.00
-BZ111-	105	0.00
-BZ120-	105	0.00
-BZ121-	105	0.00
-BZ170-	105	0.00
13011-0Y030-	111	60.00
-BZ010-	111	0.00
-BZ070-	111	0.00
13012-BZ020-	111	0.00
13013-BZ030-	111	0.00
-BZ060-	111	0.00
13041-0Y040-01	111	20.00
-0Y040-02	111	20.00
-0Y040-03	111	21.00
-BZ010-	111	0.00
-BZ070-01	111	0.00
-BZ070-02	111	0.00
-BZ070-03	111	0.00
-BZ070-04	111	0.00
-BZ070-05	111	0.00
13050-0Y020-	116	850.00
13070-0Y020-	116	0.00
13101-BZ090-01	111	0.00
-BZ090-01	112	0.00
-BZ090-02	112	0.00
-BZ090-03	112	0.00
-BZ110-	112	0.00
13102-BZ030-	112	0.00
13103-BZ030-	112	0.00
-BZ070-	112	0.00
13201-B9090-	112	0.00

PART NUMBER	PAGE	WEIGHT(g)
13201-B9095-	112	
-BZ010-	112	0.00
-BZ070-	112	0.00
13204-B2010-	112	66.00
-BZ010-	112	0.00
13211-0Y010-	112	0.00
-0Y011-	112	0.00
-0Y061-	112	195.00
13251-0Y030-	112	65.00
13265-0Y020-	112	0.00
-21020-	112	18.00
-87202-	112	23.00
-97401-	112	17.00
13401-87Z21-	113	0.00
-BZ040-	113	0.00
-BZ100-	113	0.00
13405-BZ030-	112	0.00
-BZ031-	112	0.00
-BZ080-	112	0.00
-BZ150-	112	0.00
13411-97401-	113	9,080.00
13453-87Z03-	113	0.00
-BZ040-	113	0.00
13457-97201-	113	107.00
-97401-	113	79.00
13470-87Z03-	113	0.00
-BZ011-	113	0.00
-BZ070-	113	0.00
13482-87Z01-	114	0.00
13501-97401-	116	1,246.00
-BZ010-	116	0.00
-BZ040-	116	0.00
13502-97204-	116	1,479.00
-97204-	117	1,479.00
-97401-	116	1,100.00
-BZ010-	116	0.00
-BZ030-	117	0.00
13505-87Z01-	116	0.00
13506-0Y040-	116	385.00
-97401-	116	410.00
13509-87203-	117	125.00
13510-B0030-	116	0.00
13520-BZ050-	117	0.00
13521-0Y040-	114	97.00
-97401-	114	51.00
-BZ010-	114	0.00
13523-97401-	117	163.00
-BZ020-	117	0.00
13540-0Y010-	117	0.00
13545-97401-	117	192.00

PART NUMBER	PAGE	WEIGHT(g)
13545-BZ040-	117	
13562-0Y020-	117	85.00
13566-0Y010-	117	215.00
-97401-	117	134.00
-BZ060-	117	0.00
13567-BZ010-	117	0.00
13568-B9140-	117	0.00
13579-87201-	118	27.00
13591-0Y010-	118	160.00
-97401-	118	130.00
-BZ060-	118	0.00
13711-0Y020-	118	39.00
-B1020-	118	
-BZ050-	118	0.00
-BZ060-	118	0.00
13715-0Y020-	118	0.00
-B1020-	118	
-BZ050-	118	0.00
-BZ060-	118	0.00
13716-0C020-	118	0.00
-0C030-	118	0.00
13734-0C010-	118	1.00
-0C010-	119	1.00
-87206-	118	1.00
13741-0Y010-	119	0.00
-36010-	119	
-97202-	119	9.00
-97401-	119	10.00
13750-0C040-	119	0.00
13751-B6030-	119	
-B6030-	120	
-B6030-	121	
-B6040-	119	
-B6040-	120	
-B6040-	121	
-B6050-	119	
-B6050-	120	
-B6050-	121	
-B6060-	119	
-B6060-	120	
-B6060-	121	
-B6070-	119	
-B6070-	120	
-B6070-	121	
-B6080-	119	
-B6080-	120	
-B6080-	121	
-B6090-	119	
-B6090-	120	
-B6090-	121	

PART NUMBER	PAGE	WEIGHT(g)
13751-B6100-	119	
-B6100-	120	
-B6100-	121	
-B6110-	119	
-B6110-	120	
-B6110-	121	
-B6120-	119	
-B6120-	120	
-B6120-	121	
-B6130-	119	
-B6130-	120	
-B6130-	121	
-B6140-	119	
-B6140-	120	
-B6140-	121	
-B6150-	119	
-B6150-	120	
-B6150-	121	
-B6160-	119	
-B6160-	120	
-B6160-	121	
-B6170-	119	
-B6170-	120	
-B6170-	121	
-B6180-	119	
-B6180-	120	
-B6180-	121	
-B6190-	119	
-B6190-	120	
-B6190-	121	
-B6200-	119	
-B6200-	120	
-B6200-	121	
-B6210-	119	
-B6210-	120	
-B6210-	121	
-B6220-	119	
-B6220-	120	
-B6220-	121	
-B6230-	119	
-B6230-	120	
-B6230-	121	
-B6240-	120	
-B6240-	121	
-B6250-	120	
-B6250-	121	
-B6260-	120	
-B6260-	121	
-B6270-	120	
-B6270-	121	

PART NUMBER	PAGE	WEIGHT(g)
13751-B6280-	120	
-B6280-	121	
-B6290-	120	
-B6290-	121	
-B6300-	120	
-B6300-	121	
-B6310-	120	
-B6310-	121	
-BZ030-	119	0.00
-BZ030-	120	0.00
-BZ040-	119	0.00
-BZ040-	120	0.00
-BZ050-	119	0.00
-BZ050-	120	0.00
-BZ060-	119	0.00
-BZ060-	120	0.00
-BZ070-	119	0.00
-BZ070-	120	0.00
-BZ080-	119	0.00
-BZ080-	120	0.00
-BZ090-	119	0.00
-BZ090-	120	0.00
-BZ100-	119	0.00
-BZ100-	120	0.00
-BZ110-	119	0.00
-BZ110-	120	0.00
-BZ120-	119	0.00
-BZ120-	120	0.00
-BZ130-	119	0.00
-BZ130-	120	0.00
-BZ140-	119	0.00
-BZ140-	120	0.00
-BZ150-	119	0.00
-BZ150-	120	0.00
-BZ160-	119	0.00
-BZ160-	120	0.00
-BZ170-	119	0.00
-BZ170-	120	0.00
-BZ180-	119	0.00
-BZ180-	120	0.00
-BZ190-	119	0.00
-BZ190-	120	0.00
-BZ200-	119	0.00
-BZ200-	120	0.00
-BZ210-	119	0.00
-BZ210-	120	0.00
-BZ220-	119	0.00
-BZ220-	120	0.00
-BZ230-	119	0.00
-BZ230-	120	0.00

PART NUMBER	PAGE	WEIGHT(g)
13751-BZ240-	120	
-BZ250-	120	0.00
-BZ260-	120	0.00
-BZ270-	120	0.00
-BZ280-	120	0.00
-BZ290-	120	0.00
-BZ290-	121	0.00
-BZ300-	120	0.00
-BZ300-	121	0.00
-BZ310-	120	0.00
-BZ310-	121	0.00
-BZ340-	121	0.00
-BZ350-	121	0.00
-BZ360-	121	0.00
-BZ370-	121	0.00
-BZ380-	121	0.00
-BZ390-	121	0.00
-BZ400-	121	0.00
-BZ410-	121	0.00
-BZ420-	121	0.00
-BZ430-	121	0.00
-BZ440-	121	0.00
-BZ450-	121	0.00
-BZ460-	121	0.00
-BZ470-	121	0.00
-BZ480-	121	0.00
-BZ490-	121	0.00
-BZ500-	121	0.00
-BZ510-	121	0.00
-BZ520-	121	0.00
-BZ530-	121	0.00
-BZ540-	121	0.00
-BZ550-	121	0.00
-BZ560-	121	0.00
-BZ570-	121	0.00
-BZ580-	121	0.00
-BZ590-	121	0.00
-BZ600-	121	0.00
-BZ610-	121	0.00
-BZ620-	121	0.00
13800-97205-	117	943.00
13801-0C030-	121	0.00
15100-97401-	124	396.00
-BZ030-	124	0.00
-BZ070-	124	0.00
15103-BZ010-	125	0.00
15104-BZ030-	125	0.00
15115-87Z01-	125	0.00
15131-87Z01-	125	0.00
15135-BZ010-	125	0.00

PART NUMBER	PAGE	WEIGHT(g)
15140-B0010-	125	
-BZ010-	125	0.00
15149-87Z01-	125	0.00
15188-87401-	668	1.00
-87402-	656	2.00
-87402-	668	2.00
-87402-	669	2.00
-87403-	656	2.00
-87403-	668	2.00
15197-87Z01-	125	0.00
15301-BZ040-	99	0.00
-BZ080-	99	0.00
-BZ100-	99	0.00
15310-97401-	99	45.00
15330-0Y050-	86	0.00
-0Y060-	86	125.00
-BZ060-	86	0.00
-BZ070-	102	0.00
15369-BZ010-	169	0.00
15511-BZ010-	90	0.00
15601-B2030-	127	
-BZ010-	127	0.00
-BZ030-	127	0.00
15671-BZ010-	127	0.00
-BZ020-	127	0.00
15678-0Y010-	90	22.00
-21010-	90	1.00
-97201-	128	2.00
15707-97402-	128	115.00
15708-0Y040-	99	15.00
-97402-	99	27.00
16031-0Y010-	143	0.00
16035-97401-	143	
-BZ010-	143	0.00
16100-B9010-	131	0.00
-B9011-	131	597.00
-B9021-	131	0.00
-B9022-	131	0.00
-B9321-	131	0.00
-B9490-	131	0.00
16102-B0010-	131	575.00
16104-B0010-	131	20.00
16131-87209-	132	0.00
16171-87201-	132	109.00
16173-BZ010-	132	0.00
-BZ020-	132	0.00
16258-0Y010-	102	2.00
-97401-	145	
-BZ010-	145	0.00
16261-BZ010-	143	0.00

PART NUMBER	PAGE	WEIGHT(g)
16261-BZ020-	143	
-BZ030-	143	0.00
-BZ310-	143	0.00
16267-97401-	143	
-BZ010-	143	0.00
-BZ050-	143	0.00
16268-BZ010-	143	0.00
16271-0Y030-	132	0.00
-87Z03-	132	0.00
-B1010-	132	
-BZ020-	132	0.00
16281-BZ030-	144	0.00
16282-BZ010-	144	0.00
16283-BZ010-	144	0.00
16321-97403-	144	
-BZ010-	144	0.00
-BZ020-	144	0.00
16322-BZ010-	144	0.00
-BZ011-	144	0.00
-BZ050-	144	0.00
16326-0Y010-	144	0.00
16332-BZ010-	144	0.00
-BZ011-	144	0.00
16341-35010-	144	2.00
16360-BZ080-	145	0.00
-BZ210-	145	0.00
16361-BZ090-	145	0.00
16363-BZ100-	145	1,246.00
16381-BZ020-	145	0.00
-BZ050-	145	0.00
16385-BZ010-	145	0.00
16400-BZ430-	145	0.00
-BZ470-	145	0.00
-BZ660-	145	0.00
-BZ680-	145	0.00
-BZ700-	145	0.00
16401-BZ020-	145	0.00
16407-97201-	146	
-BZ020-	146	0.00
16417-0C180-	145	0.00
-BZ050-	145	0.00
16442-97201-	145	1.00
-BZ010-	131	0.00
-BZ010-	132	0.00
16464-BZ010-	146	0.00
16470-BZ130-	146	0.00
-BZ210-	146	0.00
16471-BZ100-	146	0.00
16472-BZ090-	146	0.00
16477-BZ010-	146	0.00

PART NUMBER	PAGE	WEIGHT(g)
16503-BZ070-	146	
16507-BZ030-	146	0.00
-BZ031-	146	0.00
-BZ050-	146	0.00
16571-BZ100-	146	0.00
-BZ220-	146	0.00
-BZ221-	146	0.00
-BZ230-	146	0.00
-BZ260-	148	0.00
-BZ270-	147	0.00
-BZ280-	147	0.00
16572-BZ100-	147	0.00
-BZ150-	147	0.00
-BZ151-	147	0.00
-BZ160-	147	0.00
-BZ210-	147	0.00
-BZ220-	147	0.00
-BZ250-	147	0.00
-BZ260-	147	0.00
16573-BZ010-	147	0.00
-BZ020-	147	0.00
16574-B1010-	147	
-BZ010-	147	0.00
-BZ020-	147	0.00
16575-BZ010-	147	0.00
16582-BZ070-	148	0.00
16603-97401-	148	270.00
-BZ040-	132	0.00
-BZ041-	132	0.00
16620-BZ010-	132	950.00
16630-97402-	148	392.00
16631-BZ011-	148	0.00
16639-BZ022-	148	0.00
16649-B0020-	148	0.00
-BZ030-	148	0.00
16659-B0010-	145	0.00
16711-BZ050-	148	0.00
-BZ060-	148	0.00
17118-BZ010-	153	0.00
-BZ030-	153	0.00
-BZ130-	153	0.00
17120-B0030-	153	0.00
-B0060-	153	0.00
-B1020-	153	
-BZ040-	153	0.00
-BZ100-	153	0.00
17125-BZ010-	153	0.00
17126-BZ010-	188	0.00
17138-BZ060-	153	0.00
17140-BZ180-	153	0.00

PART NUMBER	PAGE	WEIGHT(g)
17141-BZ020-	153	
17152-B1010-	159	49.00
-BZ010-	159	34.00
17163-BZ020-	391	0.00
17164-BZ030-	391	0.00
17167-B0021-	153	0.00
-BZ070-	153	0.00
17168-BZ020-	153	0.00
17173-87229-	153	40.00
-97401-	153	
-BZ020-	153	0.00
-BZ070-	153	20.00
17177-B0020-	154	0.00
-B1020-	154	15.00
-BZ030-	154	0.00
17182-BZ010-	148	0.00
-BZ020-	148	0.00
17410-BZ410-	159	0.00
-BZ420-	159	0.00
-BZ630-	159	0.00
-BZ640-	159	0.00
-BZ830-	159	0.00
17430-BZ250-	159	0.00
-BZ290-	159	0.00
-BZ340-	159	0.00
-BZ380-	159	0.00
17451-21030-	159	56.00
-B0010-	159	0.00
-BZ010-	159	0.00
17567-87210-	159	
-87703-	159	46.00
-BZ030-	159	0.00
-BZ031-	159	0.00
-BZ040-	159	0.00
17569-97501-	160	66.00
17650-97207-	168	
17660-BZ010-	168	0.00
17700-BZ071-	163	0.00
-BZ090-	163	0.00
-BZ170-	163	0.00
-BZ190-	163	0.00
-BZ200-	163	0.00
17701-BZ160-	163	0.00
17705-BZ010-	163	0.00
-BZ071-	163	0.00
-BZ180-	163	0.00
17735-BZ030-	163	0.00
17750-BZ010-	163	0.00
17751-BZ070-	163	0.00
17771-BZ080-	164	0.00

PART NUMBER	PAGE	WEIGHT(g)
17771-BZ090-	164	
-BZ100-	164	0.00
17772-BZ010-	163	0.00
-BZ030-	164	0.00
17775-BZ020-	164	0.00
17801-BZ010-	164	0.00
-BZ050-	164	0.00
-BZ120-	164	0.00
-BZ150-	164	0.00
17881-BZ010-	164	0.00
-BZ070-	164	0.00
-BZ170-	164	0.00
17882-BZ010-	164	0.00
19000-BZ811-	73	0.00
-BZ861-	73	0.00
-BZV75-	73	0.00
-BZV76-	73	0.00
-BZX20-	73	0.00
-BZX21-	73	0.00
-BZX31-	73	0.00
19070-BZ010-	172	0.00
-BZ030-	172	0.00
-BZ031-	172	
-BZ060-	172	0.00
19300-BZ010-	86	0.00
-BZ020-	86	0.00
19311-97401-	101	
-BZ010-	97	0.00
-BZ020-	101	0.00
19315-B0010-	114	
-BZ010-	114	0.00
21133-B0010-	188	
-BZ020-	188	0.00
21141-B0020-	545	
-BZ030-	168	0.00
-BZ040-	545	0.00
21552-BZ010-	518	0.00
-BZ020-	519	0.00
21591-97401-	148	
-BZ010-	148	0.00
21814-BZ021-	504	0.00
-BZ030-	504	0.00
21893-BZ010-	148	0.00
-BZ030-	545	0.00
22030-0Y020-	188	0.00
-BZ040-	188	0.00
22204-BZ010-	164	45.00
22210-BZ010-	188	0.00
-BZ011-	188	0.00
-BZ080-	188	0.00

PART NUMBER	PAGE	WEIGHT(g)
22210-BZ081-	188	
22267-B1021-	188	
-BZ020-	188	0.00
22268-BZ010-	188	0.00
22271-0Y030-	154	0.00
-B0010-	188	0.00
23100-BZ220-	545	0.00
23101-BZ070-	545	0.00
23209-BZ050-	188	37.00
23210-BZ130-	545	0.00
-BZ150-	545	0.00
-BZ300-	545	0.00
23232-BZ010-	546	15.00
23250-BZ010-	188	0.00
-BZ020-	188	0.00
23265-BZ010-	547	176.00
23270-B0010-	188	0.00
-B0030-	188	
23291-0Y020-	188	0.00
-23010-	188	
-BZ010-	188	0.00
23300-B4010-	545	0.00
-BZ010-	545	0.00
23322-87101-	145	6.00
23807-97403-	189	
-BZ030-	189	0.00
23811-B0020-	189	0.00
23814-87Z01-	189	0.00
-BZ070-	189	0.00
23827-BZ020-	168	0.00
-BZ030-	168	0.00
23841-B1010-	189	12.00
-BZ020-	189	0.00
23842-B0010-	189	0.00
23845-87205-	189	21.00
-BZ010-	189	0.00
23849-BZ010-	189	0.00
-BZ030-	189	0.00
23891-47040-	189	9.00
23901-B0010-	189	0.00
-B0020-	189	0.00
-BZ020-	189	0.00
-BZ030-	189	0.00
25051-BZ010-	154	0.00
-BZ110-	154	0.00
27060-BZ010-	176	0.00
-BZ011-	176	0.00
-BZ100-	176	0.00
-BZ310-	176	0.00
-BZ320-	176	0.00

PART NUMBER	PAGE	WEIGHT(g)
27330-87209-	176	
-BZ010-	176	0.00
-BZ030-	176	0.00
-BZ060-	176	1,830.00
27357-87207-	176	151.00
-87704-	176	0.00
-BZ010-	176	0.00
27360-BZ010-	176	0.00
-BZ040-	176	0.00
27370-87708-	176	17.00
-B1020-	176	20.00
-BZ010-	176	0.00
-BZ020-	176	0.00
27371-BZ010-	176	0.00
27372-BZ010-	177	0.00
27411-87216-	177	160.00
-BZ010-	177	0.00
-BZ040-	177	0.00
-BZ100-	177	0.00
27700-BZ010-	177	0.00
-BZ050-	177	0.00
27791-87702-	176	41.00
28011-BZ010-	182	0.00
-BZ020-	182	0.00
-BZ140-	182	0.00
28021-BZ030-	182	0.00
-BZ050-	182	0.00
28100-BZ010-	182	0.00
-BZ020-	182	0.00
-BZ200-	182	0.00
-BZ230-	182	0.00
28110-BZ080-	182	0.00
-BZ170-	182	0.00
28113-BZ030-	182	0.00
28117-BZ010-	182	0.00
28120-BZ010-	182	0.00
-BZ060-	182	0.00
-BZ090-	182	0.00
28126-BZ010-	182	0.00
28130-BZ140-	182	0.00
28140-BZ140-	183	0.00
28142-87504-	183	4.00
-87505-	183	12.00
28143-10020-	183	
-BZ010-	183	0.00
28149-87501-	183	
-BZ010-	183	0.00
28150-BZ010-	183	0.00
-BZ030-	183	0.00
-BZ040-	183	0.00

PART NUMBER	PAGE	WEIGHT(g)
28160-BZ010-	183	
-BZ020-	183	0.00
-BZ040-	183	0.00
28163-BZ140-	183	0.00
28199-BZ140-	183	0.00
28226-BZ010-	183	0.00
-BZ010-	184	0.00
-BZ020-	183	0.00
28254-BZ040-	184	0.00
-BZ060-	184	0.00
28255-BZ140-	184	0.00
28256-BZ020-	184	0.00
28277-87201-	182	
28850-B2041-	602	33.00
-BZ010-	602	0.00
31111-87402-	208	3,700.00
-BZ010-	208	0.00
-BZ040-	208	0.00
-BZ050-	208	0.00
31121-B5020-	208	
-BZ010-	208	0.00
-BZ020-	208	0.00
-BZ050-	208	0.00
31123-BZ010-	208	0.00
31126-20070-	192	
-BZ020-	192	0.00
31128-BZ010-	208	0.00
-BZ020-	208	0.00
31210-BZ010-	192	0.00
-BZ020-	192	0.00
-BZ021-	192	0.00
-BZ040-	192	0.00
-BZ081-	192	2,913.00
31230-BZ060-	192	118.00
31232-87401-	192	
-BZ040-	192	0.00
-BZ080-	192	0.00
31233-BZ010-	192	0.00
-BZ010-	193	0.00
-BZ020-	193	0.00
-BZ040-	193	0.00
-BZ050-	193	0.00
31234-87402-	193	
-BZ030-	193	0.00
-BZ031-	193	2.00
31236-87401-	193	
-87501-	193	15.00
-BZ010-	193	0.00
-BZ020-	193	0.00
31250-BZ080-	193	0.00

PART NUMBER	PAGE	WEIGHT(g)
31250-BZ130-	193	
-BZ200-	193	0.00
-BZ210-	193	0.00
31310-BZ140-	196	0.00
-BZ230-	196	0.00
-BZ380-	196	0.00
31321-BZ010-	197	0.00
-BZ010-	299	0.00
31324-B0010-	197	0.00
31340-BZ120-	197	0.00
-BZ130-	197	0.00
-BZ150-	197	0.00
-BZ160-	197	0.00
31341-BZ010-	198	0.00
-BZ010-	552	0.00
-BZ020-	197	0.00
-BZ080-	198	0.00
-BZ090-	198	0.00
-BZ160-	198	0.00
-BZ210-	198	0.00
-BZ300-	198	0.00
31394-BZ010-	196	0.00
-BZ070-	196	0.00
-BZ080-	196	0.00
31420-87402-	199	
-BZ050-	199	0.00
31434-BZ100-	197	0.00
31470-B0010-	200	
-BZ050-	200	0.00
31482-BZ150-	197	0.00
-BZ170-	197	0.00
31484-BZ010-	198	0.00
31510-B0021-	198	0.00
32000-B0010-	239	8,570.00
-B1020-	239	8,590.00
32101-B1020-	239	1,434.00
-BZ050-	239	0.00
32113-BZ030-	239	151.00
32909-BZ080-	266	0.00
-BZ081-	266	0.00
-BZ100-	266	0.00
32941-B0020-	266	0.00
-B0070-	266	0.00
32942-B0040-	266	0.00
-B0070-	266	0.00
33030-BZ200-	202	0.00
-BZ210-	202	0.00
-BZ320-	202	0.00
-BZ330-	202	0.00
-BZ340-	202	0.00

PART NUMBER	PAGE	WEIGHT(g)
33038-BZ030-	215	
33055-BZ040-	234	0.00
-BZ050-	234	0.00
33103-BZ020-	211	0.00
-BZ030-	211	0.00
33111-BZ020-	208	0.00
-BZ090-	208	0.00
33118-BZ070-	209	0.00
33119-BZ010-	209	0.00
33122-87504-	227	
-BZ020-	227	0.00
-BZ060-	227	0.00
33146-BZ040-	211	0.00
33151-97501-	209	
-BZ010-	209	0.00
33176-BZ010-	209	111.00
33195-BZ010-	209	0.00
33201-B0010-	227	
-BZ010-	227	0.00
-BZ011-	227	288.00
33203-BZ080-	227	0.00
-BZ100-	227	0.00
33205-B0010-	227	
-BZ060-	227	0.00
-BZ080-	227	0.00
33212-BZ040-	227	0.00
-BZ060-	227	145.00
33213-BZ090-	227	122.00
33214-BZ050-	227	117.00
-BZ070-	227	117.00
33232-BZ010-	228	0.00
33233-97501-	228	
-BZ010-	228	0.00
33234-97501-	228	
-BZ010-	228	0.00
33237-87501-	228	
33242-BZ010-	228	0.00
-BZ050-	228	220.00
33243-BZ010-	228	0.00
-BZ080-	229	0.00
-BZ090-	229	0.00
33244-97501-	229	
-BZ010-	229	0.00
-BZ040-	229	0.00
-BZ070-	229	0.00
33245-B4010-	229	
33251-87509-	229	
-BZ050-	229	0.00
-BZ060-	229	0.00
33256-B5010-	229	

PART NUMBER	PAGE	WEIGHT(g)
33256-BZ040-	229	
-BZ050-	229	0.00
33266-87506-	229	
-BZ040-	229	0.00
-BZ050-	229	0.00
33283-BZ050-	230	0.00
33284-BZ010-	230	0.00
33285-87501-	230	
-BZ020-	230	0.00
33295-87501-	230	
33305-B0020-	219	
-BZ010-	219	0.00
33311-B4010-	215	
-BZ010-	215	0.00
-BZ020-	215	0.00
-BZ040-	215	0.00
33321-BZ010-	216	0.00
-BZ011-	216	0.00
-BZ020-	216	0.00
-BZ021-	216	0.00
-BZ031-	216	0.00
33323-B0010-	218	
-BZ010-	218	0.00
-BZ020-	218	0.00
33326-87501-	218	
-BZ010-	218	0.00
-BZ011-	218	112.00
-BZ011-	219	112.00
33332-87511-	219	
-BZ010-	219	0.00
-BZ090-	219	0.00
33333-BZ010-	219	0.00
-BZ020-	219	0.00
33335-97501-	221	
-BZ010-	221	0.00
-BZ020-	221	0.00
33336-87504-	221	
-BZ010-	221	0.00
33348-87508-	221	
-BZ010-	221	0.00
33356-87501-	221	
-BZ010-	221	0.00
33360-BZ030-	221	0.00
-BZ170-	221	0.00
-BZ200-	221	0.00
33365-87702-	221	
-87702-	222	
-BZ010-	221	0.00
-BZ030-	221	0.00
-BZ030-	222	0.00

PART NUMBER	PAGE	WEIGHT(g)
33366-87505-	222	
-BZ010-	222	0.00
-BZ030-	222	0.00
33367-87507-	222	
-BZ010-	222	0.00
-BZ050-	222	0.00
33368-87509-	222	
-BZ010-	222	0.00
-BZ080-	222	0.00
33369-87703-	222	
-BZ010-	222	0.00
-BZ050-	222	0.00
33370-B5020-	222	
-BZ020-	222	0.00
-BZ100-	222	0.00
33371-87505-	223	
-BZ010-	223	0.00
33380-B5020-	223	
-BZ020-	223	0.00
-BZ100-	223	0.00
33381-B0010-	222	
-BZ010-	222	0.00
-BZ020-	222	0.00
33386-87503-	223	
-BZ010-	223	0.00
-BZ040-	223	0.00
33387-87503-	223	
-BZ010-	223	0.00
-BZ040-	223	0.00
33391-87701-	223	
-BZ010-	223	0.00
-BZ050-	223	0.00
33402-B4011-	223	
-BZ010-	223	0.00
-BZ030-	223	0.00
33421-B4010-	224	
-BZ010-	223	0.00
-BZ010-	224	0.00
-BZ020-	224	0.00
-BZ030-	224	0.00
33449-87501-	209	
-B2010-	244	15.00
-BZ010-	209	0.00
-BZ060-	209	15.00
33451-87504-	224	
-BZ050-	224	0.00
33462-87501-	224	
-BZ020-	224	0.00
33467-87501-	211	
-BZ020-	211	0.00

PART NUMBER	PAGE	WEIGHT(g)
33481-BZ070-	224	
-BZ080-	224	0.00
33485-87201-	244	4.00
33504-BZ110-C0	234	0.00
-BZ110-C1	234	0.00
-BZ120-C0	234	0.00
-BZ120-C1	234	0.00
-BZ180-C0	234	0.00
-BZ180-C1	234	0.00
33507-BZ010-	234	0.00
33511-B1010-	263	229.00
33518-BZ010-	227	0.00
-BZ020-	227	0.00
33519-BZ010-	230	7.00
33524-B0010-	245	288.00
-B1040-	245	0.00
33528-87503-	230	
-87Z01-	230	0.00
-BZ050-	230	0.00
33546-BZ010-	234	11.00
-BZ020-	234	7.00
33548-BZ080-	235	0.00
-BZ110-	235	0.00
33550-BZ011-	235	0.00
-BZ180-C0	235	0.00
-BZ181-C0	235	0.00
-BZ470-C0	235	0.00
33556-BZ010-	235	0.00
33575-BZ010-	235	44.00
33586-BZ020-	235	0.00
33602-BZ030-	235	0.00
33752-BZ010-	235	618.00
-BZ010-	236	618.00
33820-BZ020-	236	0.00
-BZ021-	236	0.00
-BZ190-	236	0.00
-BZ191-	236	0.00
33823-BZ010-	236	0.00
-BZ011-	236	0.00
33829-B0020-	236	
-B0030-	236	
-BZ040-	236	0.00
-BZ080-	236	0.00
33830-BZ010-	236	0.00
-BZ011-	236	0.00
35000-B0030-	237	0.00
-B1010-	237	0.00
-B1020-	237	0.00
35013-87402-	244	95.00
-B1050-	244	0.00

PART NUMBER	PAGE	WEIGHT(g)
35057-97501-	263	
-B1010-	263	89.00
35073-B9010-	256	1,528.00
35103-B0010-	244	0.00
-BZ040-	244	0.00
35106-B1020-	245	1,188.00
35108-B0011-	248	1,920.00
-B1010-	248	0.00
35120-B0010-	248	0.00
-B0020-	248	7.00
35136-BZ010-	212	0.00
35141-B0011-	245	0.00
-B0012-	245	0.00
-B1070-	245	0.00
35160-B1050-	245	0.00
35168-B1020-	245	21.00
-B1060-	245	21.00
35210-97201-	261	153.00
35220-97201-	261	160.00
35240-97201-	261	0.00
-B1010-	261	77.00
-B1020-	261	62.00
35257-87501-	211	
35280-97201-	261	74.00
35285-97201-	261	8.00
35303-97501-	261	127.00
-B1010-	261	107.00
35310-97203-	239	2,360.00
-B1040-	239	0.00
-B1050-	239	2,254.00
35345-BZ010-	211	0.00
35409-97501-	263	13.00
-B1020-	263	18.00
35410-97206-	261	3,990.00
-B1060-	261	0.00
-B1061-	261	3,510.00
35481-97501-	261	2.00
35501-97501-	263	92.00
-B1020-	263	0.00
-B1021-	263	0.00
-B5010-	263	102.00
35505-97501-	263	277.00
35507-87402-	263	59.00
35511-97501-	263	106.00
35556-87502-	263	26.00
35557-B0010-	263	109.00
-B1020-	263	108.00
-B1030-	263	110.00
35567-97501-	264	27.00
35568-97501-	263	27.00

PART NUMBER	PAGE	WEIGHT(g)
35595-97501-	264	
-B1020-	264	43.00
35610-97204-	252	2,870.00
-B1030-	252	2,868.00
35618-B1010-	256	50.00
35623-B1010-	256	257.00
-B1020-	256	275.00
35624-97201-	254	60.00
-97206-	254	57.00
35627-97202-	254	43.00
35628-97202-	256	24.00
35631-97203-	256	0.00
-B1010-	256	428.00
35632-97201-	254	77.00
-97201-	255	77.00
35633-97205-	252	0.00
-B1010-	252	17.00
35634-97206-	252	43.00
35635-97201-	252	70.00
35637-97201-	255	27.00
35647-97204-	252	47.00
35648-97205-	252	39.00
35650-B1020-	252	1,710.00
-B1030-	252	1,712.00
35653-97201-	239	0.00
-B1010-	239	1.00
-B1010-	240	1.00
35664-97205-	255	159.00
35667-97206-	252	19.00
35673-B1010-	253	0.00
35675-97201-	252	64.00
35676-97202-	255	127.00
35677-B1011-	253	16.00
35681-97201-	255	31.00
35689-B1010-	253	57.00
35706-97203-	256	432.00
-97203-	257	432.00
35708-97203-	257	312.00
35709-97204-	257	162.00
35712-97201-	253	1.00
35720-97211-	257	1,928.00
35736-BZ020-	224	0.00
-BZ021-	224	0.00
35740-97201-	257	788.00
35790-97201-	257	0.00
-B1030-	257	0.00
-B1050-	257	411.00
35824-97501-	245	1.00
-97501-	246	1.00
35847-97501-	248	16.00

PART NUMBER	PAGE	WEIGHT(g)
35883-97204-	258	
-B1010-	258	0.00
-B1020-	258	0.00
-B1030-	258	
-B5010-	258	26.00
35884-97204-	258	34.00
-B1010-	258	34.00
35885-97213-	258	140.00
-97214-	258	150.00
-97215-	258	154.00
-97216-	258	150.00
-97217-	258	170.00
-97218-	258	174.00
-B1010-	258	140.00
-B1020-	258	148.00
-B1030-	258	155.00
-B1040-	258	162.00
-B1050-	258	169.00
-B1060-	258	177.00
35960-97203-	261	66.00
37101-BZ040-	268	0.00
-BZ060-	268	0.00
37104-BZ070-	268	0.00
-BZ100-	268	0.00
37110-BZ130-	267	0.00
-BZ131-	267	0.00
-BZ140-	267	0.00
-BZ150-	267	0.00
-BZ160-	267	0.00
-BZ161-	267	0.00
37230-BZ010-	268	0.00
-BZ040-	268	0.00
37231-BZ070-	268	0.00
-BZ080-	268	0.00
37302-BZ050-	268	0.00
-BZ060-	268	0.00
37306-BZ030-	268	0.00
37315-BZ030-	268	0.00
-BZ030-	269	0.00
41039-B4010-	272	
-B4020-	272	
-BZ010-	272	0.00
-BZ050-	272	0.00
-BZ240-	272	0.00
-BZ250-	272	0.00
-BZ260-	272	0.00
41101-BZ010-	272	7,090.00
-BZ021-	272	0.00
41110-BZ022-	272	0.00
-BZ200-	272	0.00

PART NUMBER	PAGE	WEIGHT(g)
41110-BZ220-	272	
-BZ340-	272	0.00
-BZ360-	272	0.00
-BZ370-	272	0.00
-BZ371-	272	0.00
-BZ390-	272	0.00
-BZ391-	272	0.00
-BZ400-	272	0.00
41114-87401-	272	
-BZ010-	272	0.00
41204-87403-	277	
-B0010-	277	
-B4020-	277	
-BZ010-	277	0.00
-BZ021-	277	0.00
-BZ030-	277	0.00
-BZ041-	277	0.00
41231-B4020-	277	
-BZ020-	277	0.00
41252-87503-	277	
-BZ010-	277	0.00
41311-B4011-	277	
-B4011-	278	
-BZ020-	277	0.00
-BZ021-	277	0.00
-BZ021-	278	0.00
-BZ130-	278	0.00
41312-B4011-	278	
-BZ010-	278	0.00
-BZ030-	278	0.00
41315-87503-	278	
-BZ010-	278	0.00
41316-87501-	278	
-BZ010-	278	0.00
41331-87407-	278	
-BZ010-	278	0.00
-BZ070-	278	0.00
41341-87406-	278	
-BZ010-	278	0.00
-BZ070-	278	0.00
41342-87402-	278	
-87402-	279	
-B4010-	279	
-BZ020-	278	0.00
-BZ020-	279	0.00
-BZ030-	279	0.00
-BZ080-	279	0.00
41361-87407-	279	
-87408-	279	
-87409-	279	

PART NUMBER	PAGE	WEIGHT(g)
41361-87509-	279	
-87510-	279	
-87709-	279	
-BZ010-	279	0.00
-BZ020-	279	0.00
-BZ030-	279	0.00
-BZ040-	279	0.00
-BZ050-	279	0.00
-BZ060-	279	0.00
41371-B4010-	279	
-BZ011-	279	0.00
41991-BZ070-	532	0.00
-BZ130-	532	0.00
-BZ131-	532	0.00
42110-BZ031-	280	0.00
-BZ240-	280	0.00
-BZ270-	280	0.00
-BZ280-	280	0.00
42184-27010-	311	0.00
-27010-	312	0.00
-97501-	311	0.00
42301-BZ110-	281	0.00
42302-BZ100-	281	0.00
42311-BZ080-	281	0.00
42312-BZ080-	281	0.00
42423-BZ010-	282	0.00
-BZ020-	282	0.00
42424-BZ010-	282	0.00
42431-BZ010-	282	0.00
42611-BZ010-	284	0.00
-BZ510-	284	0.00
-BZ520-	284	0.00
-BZ520-	285	0.00
-BZ700-	284	0.00
-BZC70-	284	0.00
42638-BZ010-	285	0.00
-BZ011-	285	0.00
-BZ020-	285	0.00
-BZ021-	285	0.00
-BZ560-	285	0.00
42661-BZ480-	533	0.00
-BZ500-	533	0.00
-BZ750-	533	0.00
43211-BZ240-	321	0.00
-BZ250-	321	0.00
43212-BZ240-	321	0.00
-BZ240-	322	0.00
-BZ250-	322	0.00
43511-BZ090-	286	0.00
-BZ170-	286	0.00

PART NUMBER	PAGE	WEIGHT(g)
43512-BZ170-	287	
-BZ180-	287	0.00
43514-BZ040-	287	0.00
44050-BZ040-	317	0.00
44547-BZ030-	317	0.00
44548-B5020-	317	
-BZ040-	317	0.00
44589-B2010-	320	86.00
-BZ020-	320	0.00
44590-BZ120-	317	0.00
44610-BZ230-	304	0.00
-BZ510-	304	0.00
-BZ590-	304	0.00
44618-B1010-	611	1.00
44749-97201-	127	56.00
44750-B0050-	168	0.00
-B0070-	304	0.00
-B0080-	304	0.00
-BZ240-	304	0.00
-BZ250-	304	0.00
45020-BZ010-	288	0.00
-BZ090-	288	0.00
-BZ100-	288	0.00
-BZ110-	288	0.00
45025-BZ010-	288	0.00
45046-BZ120-	293	0.00
-BZ240-	293	0.00
45047-BZ120-	293	0.00
-BZ140-	293	0.00
45102-BZ270-C0	291	0.00
-BZ340-C0	291	0.00
-BZ400-C0	291	0.00
-BZ500-C0	291	0.00
-BZ500-C2	291	0.00
-BZ510-C0	291	0.00
-BZ510-C1	291	0.00
-BZ520-C1	291	0.00
45107-B2050-	291	4.00
-BZ080-	291	0.00
-BZ081-	291	0.00
45130-BZ300-C0	291	0.00
-BZ301-C0	291	0.00
-BZ400-C0	291	0.00
-BZ401-C0	291	0.00
-BZ420-C0	291	0.00
-BZ421-C0	291	0.00
-BZ560-C0	291	0.00
45220-BZ170-	288	0.00
-BZ171-	288	0.00
45250-BZ130-	288	0.00

PART NUMBER	PAGE	WEIGHT(g)
45250-BZ140-	288	
-BZ260-	289	0.00
-BZ270-	288	0.00
-BZ270-	289	0.00
45254-BZ120-	289	0.00
45273-B0010-	289	0.00
45281-B0010-	289	0.00
-BZ110-	289	0.00
45286-BZ120-C0	289	0.00
-BZ160-C0	289	0.00
45287-BZ140-C0	289	0.00
-BZ150-C0	289	0.00
-BZ200-C0	289	0.00
-BZ210-C0	289	0.00
45503-BZ120-	293	0.00
-BZ220-	293	0.00
45510-BZ110-	293	0.00
-BZ160-	293	0.00
-BZ240-	293	0.00
-BZ250-	293	0.00
-BZ410-	293	0.00
-BZ420-	293	0.00
45514-BZ120-	293	0.00
45516-BZ120-	293	0.00
45535-BZ070-	293	0.00
45538-BZ020-	293	0.00
45897-B2010-	289	12.00
46210-BZ041-C0	296	0.00
-BZ080-C0	296	0.00
-BZ080-C1	296	0.00
-BZ150-C0	296	0.00
-BZ150-C1	296	0.00
-BZ160-C0	296	0.00
46217-BZ010-	296	0.00
-BZ040-C0	296	0.00
-BZ040-C1	296	0.00
46302-87Z03-	296	0.00
46334-BZ010-	296	0.00
46420-BZ110-	296	0.00
-BZ250-	296	0.00
46430-BZ100-	297	0.00
-BZ250-	297	0.00
46441-87Z04-	297	0.00
46467-BZ010-	296	0.00
46791-B5150-	311	
-B5150-	312	
47043-BZ031-	311	0.00
47044-BZ031-	312	0.00
47110-BZ180-	299	0.00
-BZ181-	299	0.00

PART NUMBER	PAGE	WEIGHT(g)
47110-BZ190-	299	
-BZ191-	299	0.00
47121-BZ010-	299	0.00
47124-BZ020-	197	0.00
-BZ020-	299	0.00
-BZ030-	299	0.00
47146-BZ010-	299	0.00
-BZ050-	299	0.00
47190-BZ020-	317	0.00
47201-BZ120-	301	0.00
-BZ530-	301	0.00
-BZ560-	301	0.00
47220-BZ020-	301	0.00
-BZ280-	301	0.00
-BZ290-	301	0.00
47230-BZ020-	302	0.00
-BZ021-	302	0.00
-BZ130-	302	26.00
47255-BZ010-	302	0.00
-BZ110-	302	1.00
47264-BZ010-	305	0.00
-BZ120-	305	0.00
47275-BZ010-	305	0.00
47278-87703-	305	
47299-BZ010-	302	0.00
-BZ090-	302	2.00
47311-BZ320-	317	0.00
-BZ440-	317	0.00
-BZ450-	317	0.00
47312-BZ080-	317	0.00
-BZ470-	317	0.00
-BZ470-	318	0.00
-BZ480-	318	0.00
47313-BZ290-	318	0.00
-BZ430-	318	0.00
-BZ440-	318	0.00
47314-BZ080-	318	0.00
-BZ500-	318	0.00
-BZ520-	318	0.00
47321-BZ070-	318	0.00
-BZ250-	318	0.00
-BZ260-	318	0.00
-BZ270-	318	0.00
47322-BZ280-	319	0.00
47323-BZ190-	319	0.00
47324-BZ400-	319	0.00
47325-BZ130-	319	0.00
-BZ180-	319	0.00
-BZ190-	319	0.00
47326-BZ150-	319	0.00

PART NUMBER	PAGE	WEIGHT(g)
47326-BZ210-	319	
-BZ220-	319	0.00
47330-BZ020-	318	0.00
47389-50020-	318	2.00
-97201-	197	2.00
-97201-	318	2.00
47546-87202-	144	4.00
47547-B2030-	144	6.00
-BZ050-	307	7.00
-BZ120-	312	0.00
47548-BZ010-	307	0.00
-BZ080-	312	1.00
47550-BZ010-	312	0.00
-BZ011-	312	0.00
47560-BZ010-	312	0.00
-BZ011-	312	0.00
47611-BZ010-	312	0.00
47612-BZ010-	312	0.00
-BZ010-	313	0.00
47623-BZ010-	313	0.00
47635-BZ030-	313	2.00
47643-BZ010-	313	0.00
47644-BZ010-	313	0.00
47715-BZ090-	308	51.00
-BZ120-	307	53.00
47718-BZ010-	312	0.00
47721-BZ010-	308	0.00
47730-BZ011-	308	0.00
47731-BZ010-	308	0.00
47737-BZ010-	308	0.00
47741-BZ010-	308	0.00
47750-BZ011-	308	0.00
47775-BZ010-	308	5.00
47781-BZ090-	309	0.00
-BZ140-	309	0.00
47782-BZ070-	309	0.00
-BZ090-	309	0.00
48044-BZ080-	325	0.00
48068-BZ160-	322	0.00
-BZ190-	322	0.00
48069-BZ160-	322	0.00
-BZ190-	322	0.00
48131-BZ450-	325	0.00
-BZ470-	325	0.00
-BZ700-	325	0.00
-BZ710-	325	0.00
-BZB00-	325	0.00
-BZB10-	325	0.00
48157-BZ040-	325	0.00
-BZ100-	325	0.00

PART NUMBER	PAGE	WEIGHT(g)
48231-BZ380-	330	
-BZ381-	330	0.00
-BZ400-	330	0.00
-BZ440-	330	0.00
-BZ610-	330	0.00
-BZ830-	330	0.00
48331-BZ110-	325	0.00
48341-BZ080-	330	0.00
-BZ130-	330	0.00
48481-BZ010-	330	0.00
48482-BZ010-	330	160.00
48510-BZ720-	325	0.00
-BZ740-	325	0.00
-BZA50-	325	0.00
-BZA60-	325	0.00
-BZD60-	325	0.00
-BZD70-	325	0.00
48520-BZ390-	326	0.00
-BZ420-	326	0.00
-BZ720-	326	0.00
-BZ740-	326	0.00
-BZA10-	326	0.00
-BZA20-	326	0.00
48530-BZ080-	330	0.00
-BZ080-	331	0.00
-BZ090-	330	0.00
-BZ090-	331	0.00
-BZ240-	330	0.00
-BZ240-	331	0.00
48531-BZ470-	330	0.00
-BZ470-	331	0.00
-BZ471-	330	0.00
-BZ471-	331	0.00
-BZ472-	330	0.00
-BZ472-	331	0.00
-BZ473-	330	0.00
-BZ473-	331	0.00
-BZ490-	330	0.00
-BZ490-	331	0.00
-BZ491-	330	0.00
-BZ491-	331	0.00
-BZ492-	330	0.00
-BZ492-	331	0.00
-BZ493-	330	0.00
-BZ493-	331	0.00
48537-BZ040-	330	0.00
-BZ040-	331	0.00
48609-BZ070-	326	0.00
48684-BZ010-	326	5.00
-BZ010-	327	5.00

PART NUMBER	PAGE	WEIGHT(g)
48706-BZ040-	332	
-BZ041-	332	77.00
-BZ050-	332	0.00
-BZ060-	332	11.00
48710-BZ180-	333	0.00
-BZ180-	334	0.00
-BZ320-	333	0.00
-BZ320-	334	0.00
-BZ330-	333	0.00
-BZ330-	334	0.00
48720-BZ060-	331	0.00
-BZ060-	332	0.00
-BZ070-	331	0.00
-BZ070-	332	0.00
48740-BZ120-	332	0.00
-BZ121-	332	0.00
-BZ130-	332	0.00
-BZ140-	332	0.00
-BZ141-	332	0.00
48807-BZ010-	328	0.00
48809-BZ010-	327	0.00
48811-BZ030-	327	0.00
-BZ160-	327	0.00
48815-BZ010-	327	0.00
-BZ150-	327	0.00
48820-B0010-	327	0.00
-BZ080-	327	0.00
48824-BZ010-	327	0.00
51022-BZ030-	338	0.00
-BZ050-	338	0.00
-BZ100-	338	0.00
-BZ110-	338	0.00
51095-BZ010-	395	0.00
51096-BZ010-	395	0.00
51202-BZ090-	338	0.00
-BZ100-	338	0.00
51210-BZ100-	338	0.00
-BZ140-	338	0.00
-BZ142-	338	0.00
51325-B0010-	338	0.00
51441-BZ010-	338	0.00
-BZ020-	338	0.00
-BZ190-	338	0.00
-BZ240-	338	0.00
51451-BZ090-	339	0.00
51473-BZ010-	339	0.00
-BZ020-	339	0.00
51474-BZ010-	339	0.00
-BZ030-	339	0.00
51501-BZ060-	389	0.00

PART NUMBER	PAGE	WEIGHT(g)
51502-BZ070-	389	
51511-BZ010-	413	0.00
51903-BZ051-	340	0.00
-BZ061-	340	0.00
51909-BZ031-	340	95.00
51960-BZ050-	72	0.00
-BZ140-	72	0.00
51994-BZ010-	395	0.00
52021-BZ220-	361	0.00
52112-BZ080-	342	0.00
52115-BZ120-	342	0.00
-BZ150-	342	0.00
52116-BZ140-	342	0.00
-BZ150-	342	0.00
52119-BZA70-	342	0.00
-BZA80-	342	0.00
-BZD10-	342	0.00
-BZD11-	342	0.00
-BZD20-	342	0.00
-BZD21-	343	0.00
-BZN60-	343	0.00
52127-BZ390-	343	0.00
52130-BZ090-	343	0.00
52143-BZ060-	343	0.00
52144-BZ060-	343	0.00
52147-BZ110-	361	0.00
52155-BZ120-	346	0.00
52156-BZ120-	346	0.00
52159-BZ140-	346	0.00
-BZ141-	346	0.00
-BZJ60-	346	0.00
52164-BZ130-	346	0.00
-BZ230-	346	0.00
52185-BZ080-	395	0.00
52562-BZ010-	346	0.00
52563-BZ010-	346	0.00
-BZ010-	347	0.00
52712-BZ110-	343	0.00
-BZ340-	343	0.00
52713-BZ110-	343	0.00
-BZ330-	343	0.00
52715-BZ080-	343	0.00
-BZ090-	343	0.00
52716-BZ080-	343	0.00
-BZ090-	343	0.00
52752-BZ030-	347	0.00
52753-BZ030-	347	0.00
53028-BZ140-	361	0.00
53078-BZ090-	388	0.00
53111-BZ370-	349	0.00

PART NUMBER	PAGE	WEIGHT(g)
53111-BZ500-	349	
53112-BZ080-	349	0.00
-BZ090-	349	0.00
53113-BZ050-	349	0.00
-BZ060-	349	0.00
53121-BZ120-	350	0.00
-BZ220-	349	0.00
-BZ240-B1	349	0.00
-BZ520-B0	349	0.00
-BZ530-	349	0.00
53122-BZ060-	350	0.00
53123-BZ060-	343	0.00
53145-B2030-	470	1.00
53201-BZ070-	361	0.00
-BZ240-	361	0.00
-BZ290-	361	0.00
-BZ340-	361	0.00
53202-BZ090-	361	0.00
-BZ100-	361	0.00
-BZ101-	361	0.00
53203-BZ150-	361	0.00
-BZ170-	361	0.00
53205-BZ150-	361	0.00
-BZ151-	361	0.00
-BZ160-	361	0.00
-BZ180-	361	0.00
53208-BZ050-	361	0.00
-BZ100-	361	0.00
-BZ110-	361	0.00
53213-BZ120-	361	0.00
53214-BZ080-	361	0.00
53261-87Z02-	362	0.00
53301-BZ220-	351	0.00
-BZ290-	351	0.00
53341-BZ040-	351	0.00
-BZ090-	351	0.00
-BZ091-	351	0.00
53381-97205-	362	
-BZ010-	362	0.00
53383-BZ090-	380	0.00
53410-BZ040-	354	0.00
-BZ060-	354	0.00
53420-BZ040-	354	0.00
-BZ060-	354	0.00
53445-BZ020-	354	0.00
-BZ021-	354	0.00
-BZ060-	354	0.00
53446-BZ020-	354	0.00
-BZ021-	354	0.00
-BZ060-	354	0.00

PART NUMBER	PAGE	WEIGHT(g)
53451-BZ120-	354	
-BZ120-	355	
-BZ160-	354	0.00
53455-97401-	355	
-BZ080-	355	0.00
-BZ130-	355	0.00
53510-BZ170-	355	0.00
-BZ250-	355	0.00
53629-BZ020-	355	0.00
53630-BZ160-	355	0.00
-BZ230-	355	0.00
53651-BZ020-	395	0.00
53701-BZ380-	362	0.00
-BZ470-	362	0.00
53702-BZ070-	362	0.00
-BZ200-	362	0.00
53703-BZ080-	364	0.00
53711-BZ120-	362	0.00
-BZ160-	362	0.00
53712-BZ010-	362	0.00
-BZ170-	362	0.00
53713-BZ010-	362	0.00
-BZ010-	363	0.00
53714-BZ010-	362	0.00
53717-BZ090-	362	0.00
-BZ100-	363	0.00
53718-BZ070-	362	0.00
-BZ100-	362	0.00
-BZ101-	362	0.00
53725-BZ010-	363	0.00
-BZ020-	363	0.00
53726-BZ010-	363	0.00
-BZ020-	363	0.00
53733-BZ010-	363	0.00
-BZ070-	363	0.00
53734-BZ010-	363	0.00
-BZ070-	363	0.00
53735-BZ040-	363	0.00
-BZ060-	363	0.00
53736-BZ050-	363	0.00
-BZ090-	363	0.00
53737-BZ060-	363	0.00
-BZ080-	363	0.00
53738-BZ060-	363	0.00
-BZ080-	363	0.00
53751-BZ140-	364	0.00
53771-BZ030-	364	0.00
53785-BZ010-	364	0.00
53811-BZ220-	351	0.00
-BZ340-	351	0.00

PART NUMBER	PAGE	WEIGHT(g)
53812-BZ220-	352	
-BZ280-	352	0.00
53865-BZ020-	352	0.00
53866-BZ050-	352	0.00
53875-BZ190-	352	0.00
-BZ270-	352	0.00
53876-BZ190-	352	0.00
-BZ270-	352	0.00
55061-BZ210-C0	373	0.00
-BZ220-C1	373	0.00
55062-BZ040-C0	373	0.00
-BZ060-C1	373	0.00
55086-BZ140-	662	0.00
-BZ200-	662	0.00
55101-BZ710-	364	0.00
-BZ711-	364	0.00
-BZC30-	364	0.00
-BZC31-	364	0.00
-BZC50-	364	0.00
-BZC51-	364	0.00
-BZF00-	364	0.00
-BZF10-	364	0.00
-BZF20-	364	0.00
-BZL20-	364	0.00
55106-BZ290-	300	0.00
-BZ330-	300	0.00
55107-BZ100-	198	0.00
-BZ190-	198	0.00
-BZ330-	198	0.00
55168-BZ040-	364	0.00
-BZ150-	364	0.00
-BZ151-	364	0.00
55169-BZ120-	364	0.00
55184-BZ010-	364	0.00
55210-BZ270-	364	0.00
-BZ271-	364	0.00
-BZ440-	365	0.00
-BZ450-	365	0.00
-BZ561-	365	0.00
55223-BZ100-	365	0.00
-BZ130-	365	0.00
55259-BZ010-	365	0.00
55305-BZ340-	374	0.00
-BZ400-	374	0.00
-BZ401-	374	0.00
-BZ480-	374	0.00
-BZ600-	374	0.00
55306-BZ110-	373	0.00
55311-BZ330-B0	373	0.00
-BZ350-B0	373	0.00

PART NUMBER	PAGE	WEIGHT(g)
55311-BZ351-B0	373	
55312-BZ020-B1	373	0.00
-BZ020-E0	373	0.00
-BZ080-B0	373	0.00
-BZ080-E0	373	0.00
-BZ081-E0	373	0.00
-BZ100-E0	373	0.00
-BZ101-E0	373	0.00
55315-BZ110-	374	0.00
55349-BZ140-	374	0.00
55352-BZ040-	374	0.00
55355-BZ100-	374	0.00
55356-BZ120-	374	0.00
-BZ121-	374	0.00
-BZ122-	374	0.00
-BZ130-	374	0.00
55357-BZ070-	374	0.00
-BZ071-	374	0.00
-BZ072-	374	0.00
55394-60050-	342	0.00
-60050-	346	0.00
-BZ020-	374	19.00
55411-BZ150-C0	374	0.00
-BZ150-C0	375	0.00
-BZ220-C0	375	0.00
55412-BZ470-C0	375	0.00
-BZ680-C0	375	0.00
-BZ700-C0	375	0.00
-BZ840-B0	375	0.00
-BZB10-C0	375	0.00
55420-BZ050-C0	375	0.00
-BZ100-C1	375	0.00
-BZ150-B0	375	0.00
-BZ160-B1	375	0.00
-BZ180-B1	375	0.00
55422-BZ040-C0	375	0.00
55423-BZ030-E0	409	0.00
-BZ030-E1	409	0.00
55432-BZ080-B0	375	0.00
-BZ080-E0	375	0.00
-BZ080-E1	375	0.00
55453-B0010-	375	0.00
55454-B0010-	375	0.00
-B0040-	375	0.00
-B0040-	376	0.00
55458-BZ020-C0	376	0.00
-BZ040-E0	376	0.00
55476-BZ010-B0	376	0.00
55501-BZ050-B0	376	0.00
-BZ050-B1	376	0.00

PART NUMBER	PAGE	WEIGHT(g)
55501-BZ050-E0	376	
-BZ050-E1	376	0.00
-BZ050-E2	376	0.00
-BZ050-E3	376	0.00
55521-BZ010-C0	376	0.00
55522-BZ070-	376	0.00
55532-BZ010-E0	376	0.00
55539-B1030-E2	377	8.00
-B2010-B0	377	
-B2030-B2	377	0.00
-B2030-C1	377	3.00
-BZ020-B0	377	0.00
-BZ090-C0	377	0.00
55540-BZ010-B0	377	0.00
-BZ010-E0	377	0.00
-BZ010-E1	377	0.00
55545-BZ040-B0	377	0.00
-BZ040-E0	377	0.00
55547-28010-B1	377	9.00
-28010-C3	378	
-BZ030-B0	377	0.00
-BZ030-C1	378	0.00
55557-B2040-	378	1.00
55560-BZ050-B0	378	0.00
-BZ050-B1	378	0.00
-BZ050-E0	378	0.00
-BZ050-E1	378	0.00
-BZ050-E2	378	0.00
55561-BZ080-	378	0.00
55641-BZ140-C0	378	0.00
-BZ170-C0	378	0.00
-BZ170-E0	378	0.00
55642-BZ120-C0	378	0.00
-BZ121-C0	378	0.00
-BZ121-C1	378	0.00
-BZ122-C1	378	0.00
55646-BZ100-C0	378	0.00
-BZ110-C0	378	0.00
-BZ110-E0	378	0.00
55650-BZ140-C1	379	0.00
-BZ180-C1	379	0.00
-BZ180-C2	379	0.00
55660-BZ080-C1	379	0.00
-BZ100-C1	379	0.00
-BZ100-C2	379	0.00
55696-BZ010-	376	0.00
55701-BZ150-	380	0.00
55703-BZ240-	380	0.00
-BZ241-	380	0.00
-BZ410-	380	0.00

PART NUMBER	PAGE	WEIGHT(g)
55703-BZ430-	380	
-BZ600-	380	0.00
-BZ610-	380	0.00
55708-BZ030-	381	0.00
-BZ100-	381	0.00
55711-BZ191-	380	0.00
55713-BZ040-	380	0.00
-BZ140-	380	0.00
-BZ140-	381	0.00
55714-BZ040-	381	0.00
-BZ140-	381	0.00
55738-52050-	353	0.00
55787-BZ010-	365	0.00
55908-BZ061-	662	0.00
55910-BZ110-C0	662	0.00
-BZ111-C1	662	0.00
-BZ362-C1	662	0.00
-BZ650-	662	0.00
56111-BZ300-	381	0.00
-BZ301-	381	0.00
-BZ310-	381	0.00
-BZ311-	381	0.00
-BZ330-	381	0.00
-BZ440-	381	0.00
56115-BZ020-	381	0.00
56117-BZ100-	381	0.00
-BZ120-	381	0.00
57023-BZ020-	363	0.00
57024-BZ010-	363	0.00
57051-BZ150-	388	0.00
-BZ151-	388	0.00
57052-BZ100-	388	0.00
-BZ101-	388	0.00
57053-BZ030-	388	0.00
57054-BZ050-	388	0.00
57101-BZ430-	388	0.00
-BZ431-	388	0.00
-BZ530-	388	0.00
-BZ660-	388	0.00
57102-BZ430-	388	0.00
-BZ431-	388	0.00
-BZ550-	388	0.00
-BZ720-	388	0.00
57104-BZ140-	365	0.00
-BZ160-	365	0.00
57111-BZ060-	388	0.00
-BZ210-	388	0.00
-BZ211-	388	0.00
57112-BZ060-	388	0.00
-BZ230-	388	0.00

PART NUMBER	PAGE	WEIGHT(g)
57112-BZ231-	388	
57113-BZ020-	388	0.00
57114-BZ030-	388	0.00
-BZ030-	389	0.00
57147-BZ010-	389	0.00
57148-BZ010-	389	0.00
57151-BZ040-	389	0.00
-BZ110-	389	0.00
57152-BZ060-	389	0.00
-BZ130-	389	0.00
57153-BZ020-	389	0.00
57154-BZ070-	389	0.00
57157-BZ010-	389	0.00
57158-BZ010-	390	0.00
57167-BZ011-	390	0.00
57168-BZ110-	390	0.00
57195-BZ050-	390	0.00
57196-BZ030-	390	0.00
57207-BZ040-	390	0.00
-BZ050-	390	0.00
57208-BZ050-	390	0.00
-BZ060-	390	0.00
57301-BZ090-	390	0.00
-BZ100-	390	0.00
57302-BZ090-	390	0.00
-BZ100-	390	0.00
57305-BZ010-	395	0.00
57306-BZ010-	395	0.00
57315-BZ130-	395	0.00
-BZ150-	395	0.00
-BZ170-	395	0.00
57316-BZ120-	395	0.00
-BZ140-	395	0.00
-BZ160-	395	0.00
57335-BZ030-	390	0.00
-BZ040-	390	0.00
57347-BZ010-	395	0.00
57348-BZ010-	395	0.00
57401-BZ130-	391	0.00
-BZ310-	391	0.00
57402-BZ190-	391	0.00
-BZ330-	391	0.00
57407-BZ040-	395	0.00
-BZ050-	396	0.00
-BZ051-	396	0.00
57427-BZ070-	391	0.00
57428-BZ020-	391	0.00
57601-BZ191-	396	0.00
-BZ300-	396	0.00
-BZ530-	396	0.00

PART NUMBER	PAGE	WEIGHT(g)	PART NUMBER	PAGE	WEIGHT(g)
57602-BZ201-	396		58311-BZ330-	398	
-BZ290-	396	0.00	-BZ331-	398	0.00
-BZ510-	396	0.00	-BZ340-	398	0.00
57606-BZ130-	396	0.00	-BZ390-	398	0.00
-BZ160-	396	0.00	-BZ391-	398	0.00
57607-BZ010-	396	0.00	58321-BZ040-	399	0.00
57608-BZ170-	396	0.00	58377-BZ020-	397	0.00
-BZ230-	396	0.00	-BZ021-	397	0.00
-BZ240-	396	0.00	58441-BZ010-	566	0.00
57615-BZ010-	396	0.00	58510-BZ611-C0	403	0.00
57632-BZ010-	396	0.00	-BZ850-C0	403	0.00
57656-BZ010-	396	0.00	-BZ860-C0	403	0.00
57799-BZ010-	396	0.00	-BZ861-C0	403	0.00
57801-BZ010-	397	0.00	-BZ870-C0	403	0.00
-BZ011-	397	0.00	-BZA70-C0	403	0.00
-BZ050-	397	0.00	-BZA71-C0	403	0.00
-BZ060-	397	0.00	-BZB01-C0	403	0.00
57805-BZ070-	397	0.00	-BZD01-C0	403	0.00
-BZ080-	397	0.00	-BZE50-C0	403	0.00
-BZ090-	397	0.00	-BZE51-C0	403	0.00
57806-BZ050-	397	0.00	-BZE52-C0	403	0.00
-BZ060-	397	0.00	-BZE60-C0	403	0.00
-BZ070-	397	0.00	-BZE61-C0	403	0.00
57807-BZ011-	397	0.00	-BZE62-C0	403	0.00
57815-BZ021-	397	0.00	-BZE70-C0	403	0.00
57841-BZ040-	397	0.00	-BZE71-C0	403	0.00
58107-BZ021-	391	0.00	-BZE72-C0	403	0.00
-BZ120-	391	0.00	-BZE80-C0	403	0.00
-BZ150-	391	0.00	-BZE81-C0	403	0.00
58111-BZ080-	391	0.00	-BZE82-C0	403	0.00
-BZ090-	391	0.00	-BZG90-C0	403	0.00
-BZ340-	391	0.00	-BZQ80-C0	403	0.00
58136-BZ010-	364	0.00	-BZQ90-C0	403	0.00
58139-BZ060-	352	0.00	-BZR00-C0	403	0.00
58151-BZ010-	399	0.00	-BZR10-C0	403	0.00
58159-BZ020-B0	604	0.00	58522-52030-	404	12.00
-BZ020-C0	604	0.00	58558-87209-	404	0.00
58171-BZ030-	391	0.00	-87502-B2	404	1.00
58191-BZ010-	391	0.00	58563-B0010-	404	0.00
58213-BZ050-	392	0.00	58570-BZ190-C1	404	0.00
58214-BZ050-	392	0.00	-BZ191-C1	404	0.00
58308-BZ120-	397	0.00	-BZ200-C1	404	0.00
-BZ120-	398	0.00	-BZ260-C1	404	0.00
-BZ130-	397	0.00	-BZ290-C0	404	0.00
-BZ130-	398	0.00	-BZ300-C0	404	0.00
58311-BZ170-	398	0.00	-BZ310-C0	404	0.00
-BZ250-	398	0.00	-BZ320-C0	404	0.00
-BZ290-	398	0.00	-BZ380-C0	404	0.00
-BZ300-	398	0.00	-BZ400-C0	404	0.00
-BZ310-	398	0.00	58579-BZ020-	398	0.00

PART NUMBER	PAGE	WEIGHT(g)	PART NUMBER	PAGE	WEIGHT(g)
58580-BZ090-C0	403		61164-BZ200-	413	
58590-BZ070-C0	404	0.00	-BZ340-	413	0.00
58694-BZ010-	405	0.00	61231-BZ210-	414	0.00
58698-BZ010-	405	0.00	61232-BZ210-	414	0.00
58791-BZ010-	392	0.00	61308-BZ090-	414	0.00
-BZ060-	392	0.00	61309-BZ010-	414	0.00
58793-BZ010-	391	0.00	61311-BZ150-	414	0.00
58804-BZ010-C0	408	0.00	-BZ151-	414	0.00
-BZ010-C1	408	0.00	61312-BZ180-	414	0.00
-BZ010-C2	408	0.00	61317-BZ020-	478	0.00
58821-BZ080-C0	408	0.00	61343-BZ100-	414	0.00
-BZ080-C1	408	0.00	61344-BZ100-	415	0.00
58837-BZ010-E0	408	0.00	61411-BZ140-	415	0.00
-BZ010-E1	408	0.00	-BZ141-	415	0.00
58839-BZ040-B0	408	0.00	61412-BZ160-	415	0.00
-BZ040-B1	408	0.00	61413-BZ010-	415	0.00
-BZ040-E0	408	0.00	61418-BZ080-	415	0.00
58841-BZ130-C0	408	0.00	61419-BZ070-	415	0.00
58842-BZ060-C0	409	0.00	61423-BZ010-	415	0.00
58843-BZ090-C0	409	0.00	61433-BZ120-	415	0.00
-BZ090-C1	409	0.00	61434-BZ110-	415	0.00
58901-BZ040-E0	409	0.00	61605-BZ050-	415	0.00
-BZ040-E1	409	0.00	-BZ100-	415	0.00
58911-BZ070-E0	409	0.00	61606-BZ050-	416	0.00
-BZ070-E1	409	0.00	61611-BZ280-	416	0.00
-BZ140-E0	409	0.00	-BZ281-	416	0.00
-BZ140-E1	409	0.00	-BZ282-	416	0.00
58918-BZ020-	409	0.00	61612-BZ290-	416	0.00
58921-BZ050-E0	409	0.00	-BZ291-	416	0.00
-BZ050-E1	409	0.00	61623-BZ120-	416	0.00
61023-BZ070-	413	0.00	61624-BZ130-	416	0.00
-BZ300-	413	0.00	61625-BZ100-	416	0.00
-BZ330-	413	0.00	61626-BZ100-	416	0.00
61037-BZ190-	413	0.00	61631-BZ100-	416	0.00
61038-BZ220-	413	0.00	61632-BZ100-	416	0.00
61106-BZ040-	413	0.00	61633-BZ010-	416	0.00
-BZ050-	413	0.00	-BZ020-	417	0.00
61107-BZ040-	413	0.00	61634-BZ010-	417	0.00
-BZ060-	413	0.00	-BZ020-	417	0.00
61108-BZ110-	413	0.00	61661-BZ070-	417	0.00
61109-BZ100-	413	0.00	61662-BZ070-	417	0.00
61121-BZ050-	381	0.00	-BZ071-	417	0.00
61122-BZ050-	382	0.00	-BZ150-	417	0.00
61131-BZ240-	413	0.00	61665-BZ040-	417	0.00
-BZ290-	413	0.00	61666-BZ040-	417	0.00
61132-BZ240-	413	0.00	61705-BZ050-	417	0.00
-BZ240-	414	0.00	-BZ051-	417	0.00
61135-BZ030-	414	0.00	61706-BZ050-	417	0.00
61136-BZ020-	414	0.00	-BZ051-	417	0.00
61145-BZ020-	414	0.00	61713-BZ060-	417	0.00

PART NUMBER	PAGE	WEIGHT(g)
61714-BZ040-	417	
-BZ040-	418	
61718-BZ040-	418	0.00
61725-BZ050-	418	0.00
-BZ051-	418	0.00
61731-BZ140-	418	0.00
-BZ141-	418	0.00
-BZ150-	418	0.00
-BZ151-	418	0.00
-BZ220-	418	0.00
-BZ230-	418	0.00
61732-BZ120-	418	0.00
-BZ121-	418	0.00
-BZ130-	418	0.00
-BZ131-	418	0.00
-BZ210-	418	0.00
-BZ220-	418	0.00
61735-BZ080-	418	0.00
61737-BZ050-	418	0.00
61738-BZ040-	418	0.00
-BZ041-	419	0.00
-BZ050-	419	0.00
61745-BZ060-	419	0.00
61746-BZ040-	419	0.00
61748-BZ040-	419	0.00
61768-BZ060-	419	0.00
61769-BZ070-	419	0.00
61786-BZ050-	419	0.00
61848-BZ020-	419	0.00
62111-BZ160-B0	428	0.00
-BZ160-E0	428	0.00
-BZ220-B0	428	0.00
-BZ220-C0	428	0.00
-BZ220-E0	428	0.00
62112-BZ160-B0	428	0.00
-BZ160-E0	428	0.00
-BZ220-B0	428	0.00
-BZ220-C0	428	0.00
-BZ220-E0	428	0.00
62210-BZ040-B0	428	0.00
62211-BZ060-B0	428	0.00
-BZ060-B0	429	0.00
62212-BZ160-B0	429	0.00
62220-BZ030-B0	429	0.00
62225-BZ040-	538	0.00
62226-BZ040-	538	0.00
62311-BZ060-	429	0.00
62312-BZ060-	429	0.00
62333-BZ050-	429	0.00
-BZ060-	429	0.00

PART NUMBER	PAGE	WEIGHT(g)
62353-BZ030-	429	
-BZ030-	430	
62411-BZ160-B0	430	0.00
62412-BZ160-B0	430	0.00
62413-BZ130-B0	430	0.00
-BZ130-E0	430	0.00
-BZ131-B0	430	0.00
-BZ131-E0	430	0.00
-BZ131-E1	430	0.00
62414-BZ130-B0	430	0.00
-BZ130-E0	430	0.00
-BZ131-B0	430	0.00
-BZ131-E0	430	0.00
-BZ131-E1	430	0.00
62471-BZ250-B0	431	0.00
62472-BZ250-B0	431	0.00
62510-BZ090-B0	431	0.00
-BZ100-B0	431	0.00
-BZ100-E0	431	0.00
-BZ100-E1	431	0.00
62520-BZ070-B0	431	0.00
-BZ080-B0	431	0.00
-BZ080-E0	431	0.00
-BZ080-E1	431	0.00
62638-BZ020-B0	431	0.00
62639-BZ020-B0	431	0.00
62711-BZ210-	421	0.00
-BZ211-	421	0.00
-BZ220-	421	0.00
-BZ221-	421	0.00
62712-BZ200-	421	0.00
-BZ201-	421	0.00
-BZ210-	421	0.00
-BZ211-	421	0.00
-BZ211-	422	0.00
62930-BZ030-	425	30.00
62961-BZ010-B1	434	0.00
63111-BZ210-	423	0.00
-BZ300-	423	0.00
63132-BZ160-	423	0.00
63134-BZ130-	423	0.00
-BZ210-	423	0.00
63138-BZ010-	423	0.00
63141-BZ100-	423	0.00
63142-BZ100-	424	0.00
63144-BZ070-	424	0.00
63231-BZ030-	564	0.00
-BZ031-	564	0.00
63310-BZ370-B0	434	0.00
-BZ410-B0	434	0.00

PART NUMBER	PAGE	WEIGHT(g)
63317-BZ010-	434	
-BZ020-	434	0.00
-BZ030-	435	0.00
-BZ040-	435	0.00
-BZ050-	435	0.00
63342-BZ070-	434	0.00
-BZ071-	434	0.00
63352-BZ040-	435	0.00
63357-BZ040-	435	0.00
64730-BZ120-B0	432	0.00
-BZ120-E0	432	0.00
-BZ120-E1	432	0.00
64740-BZ120-B0	432	0.00
-BZ120-E0	432	0.00
-BZ120-E1	432	0.00
64777-BZ010-	340	1.00
64780-BZ140-B0	469	0.00
-BZ140-E0	469	0.00
-BZ140-E1	469	0.00
64818-87704-	422	
-BZ010-	422	0.00
-BZ050-	469	0.00
64827-BZ050-	469	0.00
64828-BZ020-	469	0.00
65637-BZ160-	436	0.00
-BZ161-	436	0.00
65638-BZ160-	436	0.00
-BZ161-	436	0.00
67001-BZ300-	438	0.00
-BZ520-	438	0.00
-BZ580-	438	0.00
-BZ600-	438	0.00
67002-BZ310-	438	0.00
-BZ510-	438	0.00
-BZ580-	438	0.00
-BZ630-	438	0.00
-BZ660-	438	0.00
67003-BZ380-	452	0.00
-BZ560-	452	0.00
-BZ620-	452	0.00
67004-BZ370-	452	0.00
-BZ560-	452	0.00
-BZ620-	452	0.00
67005-BZ500-	469	0.00
-BZ510-	469	0.00
-BZA20-	469	0.00
-BZB00-	469	0.00
-BZC10-	469	0.00
-BZD50-	469	0.00
67111-BZ210-	438	0.00

PART NUMBER	PAGE	WEIGHT(g)
67112-BZ220-	438	
67113-BZ240-	452	0.00
67114-BZ240-	452	0.00
67159-BZ030-	469	0.00
-BZ030-	470	0.00
67403-BZ090-	439	0.00
67404-BZ090-	439	0.00
67407-BZ090-	452	0.00
67408-BZ090-	452	0.00
67485-BZ040-	452	0.00
67486-BZ040-	452	0.00
67491-BZ070-	439	0.00
67492-BZ070-	439	0.00
67605-BZ320-E0	439	0.00
-BZ330-B2	439	0.00
-BZ330-E0	439	0.00
-BZ331-B2	439	0.00
-BZ331-E0	439	0.00
-BZ332-B2	439	0.00
-BZ340-E0	439	0.00
-BZ341-E0	439	0.00
-BZ480-B0	439	0.00
-BZ510-B0	439	0.00
-BZ520-	439	0.00
-BZ520-B0	439	0.00
-BZ520-E0	439	0.00
-BZ590-E0	439	0.00
67606-BZ330-B2	439	0.00
-BZ330-E0	440	0.00
-BZ331-B2	440	0.00
-BZ331-E0	440	0.00
-BZ332-B2	440	0.00
-BZ340-E0	440	0.00
-BZ341-E0	440	0.00
-BZ420-E0	440	0.00
-BZ500-B0	440	0.00
-BZ530-B0	440	0.00
-BZ540-	440	0.00
-BZ540-B0	440	0.00
-BZ540-E0	440	0.00
-BZ590-E0	440	0.00
67607-BZ300-B2	452	0.00
-BZ300-E0	452	0.00
-BZ300-E1	452	0.00
-BZ310-E0	452	0.00
-BZ360-E0	452	0.00
-BZ450-E0	453	0.00
-BZ470-B1	452	0.00
67608-BZ300-B2	453	0.00
-BZ300-E0	453	0.00

PART NUMBER	PAGE	WEIGHT(g)
67608-BZ300-E1	453	
-BZ310-E0	453	0.00
-BZ360-E0	453	0.00
-BZ450-E0	453	0.00
-BZ470-B1	453	0.00
67754-BZ040-	470	0.00
67771-BZ060-	431	0.00
-BZ060-	470	0.00
67772-87Z02-	440	1.00
67831-BZ240-	440	0.00
67841-BZ230-	453	0.00
67861-BZ130-	440	0.00
67862-BZ110-	440	0.00
67867-97209-	441	0.00
-97209-	453	0.00
-B2190-	454	1.00
-B2320-	453	1.00
-BZ010-	441	1.00
-BZ010-	453	1.00
-BZ020-	440	0.00
67868-30030-	441	1.00
-97207-	441	0.00
-97207-	453	0.00
-BZ010-	441	1.00
-BZ010-	454	1.00
67871-BZ140-	453	0.00
-BZ190-	453	0.00
67872-BZ130-	454	0.00
-BZ180-	454	0.00
67881-BZ140-	470	0.00
67913-BZ110-B0	432	0.00
-BZ110-E0	432	0.00
-BZ110-E1	432	0.00
67914-BZ110-B0	432	0.00
-BZ110-E0	432	0.00
-BZ110-E1	432	0.00
67917-BZ110-B0	432	0.00
-BZ110-E0	432	0.00
-BZ110-E1	432	0.00
-BZ120-B0	432	0.00
-BZ120-E0	432	0.00
-BZ120-E1	432	0.00
67918-BZ110-B0	432	0.00
-BZ110-E0	432	0.00
-BZ110-E1	432	0.00
-BZ120-B0	432	0.00
-BZ120-E0	432	0.00
-BZ120-E1	432	0.00
67935-BZ060-B0	405	0.00
-BZ060-E0	405	0.00

PART NUMBER	PAGE	WEIGHT(g)
67935-BZ060-E1	405	
-BZ070-B0	405	0.00
-BZ070-E0	405	0.00
-BZ070-E1	405	0.00
68101-BZ220-	441	0.00
-BZ221-	441	0.00
68102-BZ210-	441	0.00
-BZ211-	441	0.00
68103-BZ240-	454	0.00
-BZ241-	454	0.00
68104-BZ230-	454	0.00
-BZ231-	454	0.00
68131-BZ420-	470	0.00
-BZ421-	470	0.00
68141-BZ090-	441	0.00
68142-BZ100-	454	0.00
68151-BZ090-	441	0.00
68152-BZ100-	454	0.00
68160-BZ040-	441	0.00
-BZ040-	442	0.00
68171-BZ130-	442	0.00
68173-BZ110-	454	0.00
68180-BZ040-	454	0.00
68210-BZ030-	442	0.00
68230-BZ030-	455	0.00
68459-87202-	473	18.00
-87502-	473	0.00
68610-BZ130-	442	0.00
68630-BZ120-	455	0.00
68750-BZ010-	448	0.00
-BZ010-	461	0.00
68760-BZ010-	448	0.00
-BZ010-	461	0.00
68770-BZ010-	461	0.00
68780-BZ010-	461	0.00
68801-BZ140-	472	0.00
68859-87101-	472	2.00
68950-B0010-	472	0.00
-B0020-	472	0.00
68960-B0010-	472	0.00
-B0010-	473	0.00
-B0020-	473	0.00
68981-BZ060-	419	0.00
-BZ060-	420	0.00
69005-BZ360-	478	0.00
-BZ361-	478	0.00
-BZ560-	478	0.00
-BZ570-	478	0.00
69023-0K030-	473	0.00
-BZ070-	473	0.00

PART NUMBER	PAGE	WEIGHT(g)
69051-BZ010-	477	
-BZ011-	477	0.00
-BZ012-	477	0.00
-BZ013-	477	0.00
-BZ260-	477	0.00
-BZ261-	477	0.00
-BZ262-	477	0.00
69052-BZ010-	477	0.00
-BZ011-	477	0.00
-BZ012-	477	0.00
-BZ013-	477	0.00
-BZ160-	477	0.00
-BZ161-	477	0.00
-BZ162-	477	0.00
69055-BZ060-	477	0.00
-BZ061-	477	
-BZ170-	477	0.00
-BZ171-	477	0.00
-BZ172-	477	0.00
-BZ240-	477	0.00
-BZ241-	477	0.00
-BZ242-	477	0.00
69057-BZ010-	477	0.00
-BZ011-	477	
-BZ210-	477	0.00
-BZ211-	477	0.00
-BZ212-	477	0.00
-BZ220-	477	0.00
-BZ221-	477	0.00
-BZ222-	477	0.00
69210-BZ200-A0	445	0.00
-BZ200-A0	458	0.00
-BZ200-A1	445	0.00
-BZ200-A1	458	0.00
-BZ200-B0	445	0.00
-BZ200-B0	458	0.00
-BZ200-B1	445	0.00
-BZ200-B1	458	0.00
-BZ200-B2	445	0.00
-BZ200-B2	458	0.00
-BZ200-B3	445	0.00
-BZ200-B3	458	0.00
-BZ200-C0	445	0.00
-BZ200-C0	458	0.00
-BZ200-D0	445	0.00
-BZ200-D0	458	0.00
-BZ200-D1	445	0.00
-BZ200-D1	458	0.00
-BZ200-E0	445	0.00
-BZ200-E0	458	0.00

PART NUMBER	PAGE	WEIGHT(g)
69210-BZ200-E1	445	
-BZ200-E1	458	
-BZ200-E2	445	0.00
-BZ200-E2	458	0.00
-BZ200-J0	445	0.00
-BZ200-J0	458	0.00
-BZ200-J1	445	0.00
-BZ200-J1	458	0.00
-BZ200-J4	445	0.00
-BZ200-J4	458	0.00
69220-BZ200-A0	445	0.00
-BZ200-A0	458	0.00
-BZ200-A1	445	0.00
-BZ200-A1	458	0.00
-BZ200-B0	445	0.00
-BZ200-B0	458	0.00
-BZ200-B1	445	0.00
-BZ200-B1	458	0.00
-BZ200-B2	445	0.00
-BZ200-B2	458	0.00
-BZ200-B3	445	0.00
-BZ200-B3	458	0.00
-BZ200-C0	445	0.00
-BZ200-C0	458	0.00
-BZ200-D0	445	0.00
-BZ200-D0	458	0.00
-BZ200-D1	445	0.00
-BZ200-D1	446	0.00
-BZ200-D1	458	0.00
-BZ200-D1	459	0.00
-BZ200-E0	445	0.00
-BZ200-E0	458	0.00
-BZ200-E1	445	0.00
-BZ200-E1	458	0.00
-BZ200-E2	446	0.00
-BZ200-E2	459	0.00
-BZ200-J0	445	0.00
-BZ200-J0	458	0.00
-BZ200-J1	445	0.00
-BZ200-J1	458	0.00
-BZ200-J4	446	0.00
-BZ200-J4	459	0.00
69270-BZ090-B0	444	0.00
-BZ090-B0	457	0.00
-BZ090-E0	444	0.00
-BZ090-E0	457	0.00
-BZ091-B0	444	0.00
-BZ091-B0	457	0.00
-BZ091-C0	444	0.00
-BZ091-C0	457	0.00

PART NUMBER	PAGE	WEIGHT(g)
69270-BZ091-E0	444	
-BZ091-E0	457	
-BZ091-E1	444	0.00
-BZ091-E1	457	0.00
69280-BZ090-B0	444	0.00
-BZ090-B0	457	0.00
-BZ090-E0	444	0.00
-BZ090-E0	457	0.00
-BZ091-B0	444	0.00
-BZ091-B0	457	0.00
-BZ091-C0	444	0.00
-BZ091-C0	457	0.00
-BZ091-E0	444	0.00
-BZ091-E0	457	0.00
-BZ091-E1	444	0.00
-BZ091-E1	457	0.00
69310-BZ110-	446	0.00
-BZ120-	446	0.00
-BZ130-	446	0.00
-BZ370-	446	0.00
69311-BZ060-	446	0.00
69312-BZ060-	446	0.00
69320-BZ100-	446	0.00
-BZ110-	446	0.00
-BZ330-	446	0.00
69330-BZ090-	459	0.00
-BZ100-	459	0.00
-BZ260-	459	0.00
69331-BZ010-	459	0.00
69332-BZ010-	459	0.00
69340-BZ090-	459	0.00
-BZ100-	459	0.00
-BZ260-	459	0.00
69350-BZ120-	473	0.00
-BZ121-	473	0.00
-BZ130-	473	0.00
-BZ131-	473	0.00
69358-BZ010-	473	0.00
69410-BZ010-	446	114.00
-BZ010-	459	114.00
69430-B0020-	473	0.00
69513-BZ010-	478	1.00
69515-BZ030-	478	0.00
-BZ031-	478	
-BZ340-	478	0.00
69682-87201-	478	
-B2010-	478	6.00
69710-BZ070-	446	0.00
-BZ070-	447	0.00
69711-BZ040-	447	0.00

PART NUMBER	PAGE	WEIGHT(g)
69712-BZ040-	447	
-BZ041-	447	0.00
69730-BZ130-	459	0.00
-BZ130-	460	0.00
69749-32040-	447	1.00
-32040-	460	1.00
-BZ100-	447	0.00
-BZ100-	460	0.00
69750-BZ070-	447	0.00
69760-BZ060-	447	0.00
69770-BZ080-	460	0.00
69780-BZ070-	460	0.00
69801-BZ110-	448	0.00
-BZ110-	461	0.00
69802-BZ100-	449	0.00
-BZ100-	462	0.00
69998-BZ010-	422	3.00
71017-BZ180-	499	0.00
71018-BZ130-	499	0.00
71071-BZA00-B0	499	0.00
-BZA00-E0	499	0.00
-BZA01-B0	499	0.00
-BZA01-E2	499	0.00
-BZA40-E0	499	0.00
-BZA41-E1	499	0.00
-BZF90-E0	499	0.00
-BZG00-E1	499	0.00
-BZL20-B0	499	0.00
-BZL30-B0	499	0.00
71072-BZ880-B0	499	0.00
-BZ880-E0	499	0.00
-BZ880-E0	500	0.00
-BZ881-B0	500	0.00
-BZ881-E2	500	0.00
-BZA50-E0	500	0.00
-BZA51-E1	500	0.00
-BZG00-E0	500	0.00
-BZG10-E1	500	0.00
-BZL20-B0	500	0.00
-BZL30-B0	500	0.00
71073-BZA40-B0	500	0.00
-BZA40-E0	500	0.00
-BZA41-B0	500	0.00
-BZA41-E2	500	0.00
-BZA90-E0	500	0.00
-BZA91-E1	500	0.00
-BZG80-E1	500	0.00
-BZG90-E1	500	0.00
-BZM30-B0	500	0.00
-BZN30-B0	500	0.00

PART NUMBER	PAGE	WEIGHT(g)
71074-BZ710-B0	500	
-BZ710-E0	500	0.00
-BZ711-B0	500	0.00
-BZ711-E2	500	0.00
-BZ780-E0	500	0.00
-BZ781-E1	500	0.00
-BZD20-E1	500	0.00
-BZD30-E1	500	0.00
-BZG80-B0	500	0.00
-BZG90-B0	500	0.00
71075-BZ810-B0	500	0.00
-BZ811-B0	500	0.00
-BZ860-E0	500	0.00
-BZ861-E2	500	0.00
-BZ870-E0	500	0.00
-BZ871-E1	500	0.00
-BZF10-E0	500	0.00
-BZF30-E0	500	0.00
-BZF40-E0	501	0.00
-BZJ80-B0	501	0.00
-BZJ90-B0	501	0.00
71076-BZ620-B0	501	0.00
-BZ621-B0	501	0.00
-BZ670-E0	501	0.00
-BZ671-E2	501	0.00
-BZ680-E0	501	0.00
-BZ681-E1	501	0.00
-BZB90-E0	501	0.00
-BZC10-E0	501	0.00
-BZC20-E0	501	0.00
-BZD70-B0	501	0.00
-BZD80-B0	501	0.00
71077-BZ680-B0	501	0.00
-BZ680-E0	501	0.00
-BZ681-B0	501	0.00
-BZ681-E0	501	0.00
-BZ682-B0	501	0.00
-BZ682-E2	501	0.00
-BZ730-E0	501	0.00
-BZ731-E0	501	0.00
-BZ732-E1	501	0.00
-BZD70-E0	501	0.00
-BZD90-E0	501	0.00
-BZG90-B0	501	0.00
-BZJ00-B0	501	0.00
71078-BZ570-B0	501	0.00
-BZ570-E0	501	0.00
-BZ571-B0	501	0.00
-BZ571-E0	501	0.00
-BZ572-B0	502	0.00

PART NUMBER	PAGE	WEIGHT(g)
71078-BZ572-E2	502	
-BZ620-E0	501	0.00
-BZ621-E0	501	0.00
-BZ622-E1	502	0.00
-BZB50-E0	502	0.00
-BZB70-E0	502	0.00
-BZD30-B0	502	0.00
-BZD40-B0	502	0.00
71110-BZ130-	502	0.00
-BZ131-	502	0.00
71120-BZ100-	502	0.00
-BZ101-	502	0.00
71121-BZ020-	502	0.00
71122-BZ020-	502	0.00
71127-BZ010-	502	6.00
71139-BZ060-B0	502	0.00
-BZ080-B0	502	0.00
-BZ080-B0	503	0.00
71147-B1020-	505	11.00
-B2030-	505	20.00
-BZ010-	503	0.00
71149-BZ140-B0	503	0.00
71303-BZ050-	503	0.00
-BZ070-	503	0.00
-BZ120-	503	0.00
71304-BZ040-	503	0.00
-BZ060-	503	0.00
-BZ070-	503	0.00
71308-BZ110-	503	0.00
71309-BZ110-	503	0.00
71462-BZ070-	504	0.00
71485-BZ040-B0	504	0.00
-BZ040-B0	505	0.00
-BZ060-B0	504	0.00
-BZ062-B0	504	0.00
-BZ110-B0	504	0.00
71501-BZ390-	505	0.00
-BZ391-	505	0.00
71503-BZ270-	505	0.00
-BZ271-	506	0.00
71504-BZ220-	506	0.00
-BZ221-	506	0.00
71505-BZ280-	505	0.00
-BZ281-	505	0.00
71506-BZ210-	505	0.00
-BZ211-	505	0.00
71507-BZ220-	506	0.00
-BZ221-	506	0.00
71508-BZ180-	506	0.00
-BZ181-	506	0.00

PART NUMBER	PAGE	WEIGHT(g)	PART NUMBER	PAGE	WEIGHT(g)
71537-BZ030-	505		71930-BZ040-B0	510	
71621-BZ040-	506	0.00	-BZ040-E0	509	0.00
71622-BZ070-	506	0.00	-BZ040-E0	510	0.00
-BZ080-	506	0.00	-BZ040-E1	509	0.00
71650-BZ010-	506	0.00	-BZ040-E1	510	0.00
-BZ020-	506	0.00	71931-BZ030-B0	509	0.00
-BZ120-	506	0.00	-BZ030-B0	510	0.00
-BZ130-	506	0.00	-BZ030-E0	509	0.00
71660-BZ010-	506	0.00	-BZ030-E0	510	0.00
-BZ020-	506	0.00	-BZ030-E1	509	0.00
-BZ120-	506	0.00	-BZ030-E1	510	0.00
-BZ130-	506	0.00	71940-BZ230-E0	509	0.00
71671-BZ040-	507	0.00	-BZ460-E2	510	0.00
71672-BZ080-	507	0.00	-BZ461-E3	510	0.00
71811-BZ110-B0	507	0.00	-BZ580-B0	509	0.00
-BZ110-E0	507	0.00	-BZ580-E0	509	0.00
-BZ210-B0	507	0.00	-BZ700-E1	509	0.00
-BZ210-E0	507	0.00	-BZ710-E1	510	0.00
71812-BZ090-B0	507	0.00	-BZ720-B0	509	0.00
-BZ090-E0	507	0.00	-BZ720-E0	509	0.00
-BZ170-B0	507	0.00	-BZA40-E0	509	0.00
-BZ170-E0	507	0.00	-BZA50-E0	509	0.00
71831-BZ040-B0	507	0.00	-BZA80-E1	510	0.00
-BZ040-E0	507	0.00	-BZA90-E1	510	0.00
71832-BZ090-B0	507	0.00	-BZD10-B0	509	0.00
-BZ090-B0	508	0.00	-BZD20-B0	509	0.00
-BZ090-E0	507	0.00	-BZD30-B0	510	0.00
71833-BZ050-B0	508	0.00	-BZD40-B0	510	0.00
-BZ050-E0	508	0.00	72110-BZ190-	510	0.00
71834-BZ060-B0	508	0.00	-BZ191-	510	0.00
-BZ060-E0	508	0.00	72120-BZ200-	510	0.00
71845-BZ010-	508	0.00	-BZ201-	510	0.00
71878-BZ010-B0	508	0.00	72130-BZ230-	510	0.00
-BZ010-E1	508	0.00	72137-BZ040-	511	0.00
71879-BZ010-B0	508	0.00	72140-BZ230-	511	0.00
-BZ010-E1	508	0.00	72157-BZ020-B0	511	0.00
71910-BZ730-B0	508	0.00	72158-BZ020-B0	511	0.00
-BZ730-E0	508	0.00	72159-BZ010-B0	511	0.00
-BZ790-E0	508	0.00	-BZ011-B0	511	0.00
-BZ791-B1	508	0.00	72160-BZ040-	511	0.00
-BZ791-E2	508	0.00	72170-BZ040-	511	0.00
-BZ792-B1	508	0.00	72179-BZ030-	503	0.00
-BZ792-E2	509	0.00	72210-BZ040-	511	0.00
-BZB10-E1	508	0.00	-BZ040-	512	0.00
-BZB11-E1	509	0.00	72211-BZ080-	512	0.00
-BZC20-E0	509	0.00	72213-BZ010-	512	4.00
-BZC40-E0	509	0.00	72220-BZ030-	512	0.00
-BZF10-B0	509	0.00	72525-BZ110-B0	512	0.00
-BZF20-B0	509	0.00	-BZ110-E0	512	0.00
71930-BZ040-B0	509	0.00	72526-BZ100-B0	512	0.00

PART NUMBER	PAGE	WEIGHT(g)	PART NUMBER	PAGE	WEIGHT(g)
72526-BZ100-E0	512		73330-BZ170-E0	524	
72611-BZ030-	398	0.00	-BZ171-B0	524	0.00
-BZ070-	398	0.00	-BZ171-E0	524	0.00
72637-BZ110-B0	512	0.00	73340-BZ150-B0	524	0.00
-BZ110-B0	513	0.00	-BZ150-E0	524	0.00
-BZ110-E0	512	0.00	-BZ151-B0	524	0.00
-BZ110-E0	513	0.00	-BZ151-E0	524	0.00
72658-BZ010-B0	513	0.00	73360-BZ210-B0	524	0.00
-BZ020-B0	513	0.00	-BZ210-E0	524	0.00
72665-BZ070-B0	513	0.00	-BZ270-B0	524	0.00
72666-BZ050-B0	513	0.00	-BZ270-E0	524	0.00
72670-BZ040-	513	0.00	73370-BZ210-B0	524	0.00
-BZ050-	513	0.00	-BZ210-E0	524	0.00
-BZ090-	512	0.00	-BZ270-B0	525	0.00
-BZ120-	513	0.00	-BZ270-E0	525	0.00
72680-BZ070-	513	0.00	73431-28010-B1	525	19.00
-BZ130-	513	0.00	-28010-E1	525	0.00
-BZ140-	513	0.00	-BZ010-B0	525	0.00
-BZ190-	513	0.00	-BZ010-E1	525	0.00
-BZ190-	514	0.00	73560-BZ080-E0	525	0.00
72692-BZ020-	398	0.00	-BZ100-B0	525	0.00
-BZ030-	398	86.00	-BZ100-E0	525	0.00
-BZ040-B0	398	0.00	73570-BZ080-E0	525	0.00
72694-BZ070-B0	514	0.00	-BZ100-B0	525	0.00
-BZ080-B0	514	0.00	-BZ100-B0	526	0.00
72695-BZ060-	514	0.00	-BZ100-E0	525	0.00
-BZ070-	514	0.00	73949-BZ050-	514	0.00
72925-BZ010-	514	0.00	73970-BZ100-B0	379	0.00
72926-BZ010-	514	0.00	-BZ170-B0	379	0.00
73060-BZ040-E1	524	0.00	74102-BZ020-B0	534	0.00
-BZ060-B0	524	0.00	-BZ020-E0	534	0.00
-BZ060-E0	524	0.00	74128-BZ010-	379	0.00
-BZ070-B0	525	0.00	74133-BZ030-	379	0.00
73210-BZ190-B0	523	0.00	74310-BZ510-B0	528	0.00
-BZ190-E0	523	0.00	-BZ740-B0	528	0.00
-BZ361-B0	523	0.00	74320-BZ410-B0	528	0.00
-BZ361-E0	523	0.00	-BZ420-B0	528	0.00
73220-BZ180-B0	523	0.00	-BZ690-B0	528	0.00
-BZ180-E0	523	0.00	-BZ700-B0	528	0.00
-BZ341-B0	523	0.00	74348-BZ060-B1	528	0.00
-BZ341-E0	523	0.00	74404-BZ010-	531	0.00
73230-BZ440-B0	523	0.00	-BZ100-	531	0.00
-BZ440-E0	523	0.00	74405-B1010-	531	55.00
-BZ461-B0	523	0.00	-BZ020-	531	0.00
-BZ461-B0	524	0.00	-BZ030-	531	0.00
-BZ461-E0	524	0.00	-BZ080-	531	0.00
-BZ471-B0	523	0.00	74411-BZ010-	531	0.00
-BZ471-E0	523	0.00	-BZ090-	531	0.00
73237-BZ010-B2	523	0.00	74417-BZ070-	531	0.00
73330-BZ170-B0	524	0.00	74451-87Z07-	531	0.00

PART NUMBER	PAGE	WEIGHT(g)
74451-BZ070-	531	
74531-BZ030-	444	0.00
-BZ030-	445	0.00
-BZ030-	457	0.00
-BZ030-	458	0.00
74552-BZ040-	532	0.00
-BZ050-	532	0.00
74598-BZ030-	532	0.00
-BZ030-	533	0.00
74611-BZ060-B1	528	0.00
74635-BZ090-C0	379	0.00
74641-BZ090-C0	528	0.00
-BZ100-B0	528	0.00
-BZ110-C0	529	0.00
-BZ120-B0	529	0.00
-BZ140-C1	529	0.00
-BZ150-C1	529	0.00
-BZ160-B1	529	0.00
-BZ170-B1	529	0.00
74642-BZ090-C0	529	0.00
-BZ100-B0	529	0.00
-BZ140-C1	529	0.00
-BZ150-B1	529	0.00
75129-87502-	470	
-BZ010-	470	0.00
75311-BZ190-	535	0.00
-BZ260-	535	0.00
-BZ290-	535	0.00
75312-BZ060-	535	0.00
-BZ110-	535	0.00
75441-BZ290-	535	0.00
75443-BZ120-	535	0.00
-BZ170-	535	0.00
-BZ180-	536	0.00
75444-BZ130-	536	0.00
-BZ140-	536	0.00
-BZ180-	536	0.00
75533-BZ100-	538	0.00
75551-BZ100-	538	0.00
75552-BZ080-	538	0.00
75561-B1020-	538	
-BZ020-	538	0.00
75641-BZ020-	538	0.00
75642-BZ020-	538	0.00
75915-BZ040-C0	420	0.00
75916-BZ040-C0	420	0.00
75931-BZ050-C0	455	0.00
75932-BZ050-C0	455	0.00
75933-BZ050-C0	455	0.00
75934-BZ050-C0	455	0.00

PART NUMBER	PAGE	WEIGHT(g)
75935-BZ060-C0	455	
-BZ060-C0	456	
75936-BZ060-C0	456	0.00
75955-BZ040-C0	442	0.00
75956-BZ040-C0	442	0.00
75957-BZ040-C0	442	0.00
-BZ040-C0	443	0.00
75958-BZ040-C0	443	0.00
76803-BZ030-	470	0.00
-BZ070-	470	0.00
76804-BZ010-	470	0.00
-BZ050-	470	0.00
76811-BZ230-	470	0.00
-BZ231-	470	0.00
-BZ250-	471	0.00
-BZ340-	470	0.00
-BZ380-	470	0.00
-BZ540-	471	0.00
76812-BZ160-	471	0.00
76819-BZ140-	471	0.00
76821-BZ030-	471	0.00
-BZ070-	471	0.00
-BZ200-	471	0.00
76825-BZ020-	471	0.00
-BZ050-	471	0.00
76826-BZ030-	471	0.00
76835-BZ030-	471	0.00
76854-87401-	349	
-BZ010-	349	0.00
77001-BZ160-	546	0.00
-BZ260-	546	0.00
-BZ620-	546	0.00
77013-BZ010-	545	0.00
-BZ100-	545	0.00
77019-BZ090-	545	0.00
-BZ160-	545	0.00
77035-BZ130-	545	0.00
77108-B2010-	546	4.00
77141-BZ090-	546	86.00
-BZ120-	546	0.00
-BZ130-	546	0.00
77201-BZ020-	546	0.00
-BZ170-	546	0.00
77203-BZ080-	546	0.00
-BZ081-	546	0.00
-BZ100-	546	0.00
77204-BZ010-	547	0.00
77213-BZ010-	547	0.00
-BZ160-	547	0.00
-BZ170-	547	0.00

PART NUMBER	PAGE	WEIGHT(g)
77213-BZ190-	547	
77219-0K010-	547	0.00
-20070-	547	0.00
77248-20030-	547	0.00
77251-BZ160-	547	0.00
-BZ210-	547	0.00
77259-BZ010-	547	0.00
77263-BZ160-	547	0.00
77269-B0010-	547	
-B0010-	548	
-BZ010-	547	0.00
-BZ170-	547	0.00
-BZ170-	548	0.00
77277-BZ012-	548	0.00
77285-B0010-	548	0.00
77286-B0010-	548	0.00
77293-BZ010-	548	0.00
-BZ011-	548	0.00
-BZ012-	548	0.00
-BZ012-	549	0.00
77300-52030-	549	54.00
77305-BZ070-	549	0.00
77306-BZ020-	549	0.00
77366-87203-	549	2.00
-B2050-	549	2.00
77377-12050-	549	3.00
77380-0K010-	549	27.00
77391-BZ010-	549	0.00
-BZ040-	549	0.00
77631-BZ060-	549	0.00
-BZ061-	549	0.00
77651-BZ030-	550	10.00
77652-B2010-	550	14.00
-BZ040-	550	0.00
77740-BZ020-	550	0.00
-BZ060-	550	0.00
77754-BZ030-	168	0.00
-BZ040-	168	0.00
-BZ160-	550	0.00
-BZ170-	550	0.00
77759-BZ021-	550	0.00
-BZ030-	550	0.00
-BZ040-	550	0.00
77775-B0010-	550	0.00
77779-BZ010-	550	0.00
77795-BZ040-	168	0.00
-BZ050-	168	0.00
78101-BZ130-	552	0.00
-BZ170-	552	0.00
78110-BZ030-	552	0.00

PART NUMBER	PAGE	WEIGHT(g)
78110-BZ031-	552	
78124-BZ080-	552	0.00
78180-BZ180-	552	0.00
-BZ190-	552	0.00
-BZ210-	552	0.00
-BZ310-	552	0.00
78184-BZ070-	552	0.00
78214-BZ010-	552	0.00
78980-BZ070-B0	504	0.00
79011-BZ020-B0	514	0.00
-BZ020-B0	515	0.00
-BZ020-E0	514	0.00
-BZ020-E0	515	0.00
79012-BZ020-B0	515	0.00
-BZ020-E0	515	0.00
79021-BZ510-B0	515	0.00
-BZ511-B0	515	0.00
-BZ512-B0	515	0.00
-BZ520-E1	515	0.00
-BZ521-E2	515	0.00
-BZ522-E2	515	0.00
-BZ540-E0	515	0.00
-BZ541-E1	515	0.00
-BZ542-E1	515	0.00
-BZ750-E0	515	0.00
-BZ760-E0	515	0.00
-BZ770-E0	515	0.00
-BZ780-E0	515	0.00
-BZ870-B0	515	0.00
-BZ880-B0	515	0.00
79022-BZ010-E0	515	0.00
-BZ020-E0	515	0.00
-BZ100-B0	515	0.00
-BZ110-B0	515	0.00
79023-BZ480-B0	515	0.00
-BZ481-B0	515	0.00
-BZ490-E1	515	0.00
-BZ491-E2	515	0.00
-BZ500-E0	515	0.00
-BZ501-E1	515	0.00
-BZ690-E0	515	0.00
-BZ700-E0	515	0.00
-BZ710-E0	516	0.00
-BZ720-E0	516	0.00
-BZ820-B0	516	0.00
-BZ830-B0	516	0.00
79024-BZ010-B0	516	0.00
-BZ011-B0	516	0.00
-BZ020-E1	516	0.00
-BZ021-E2	516	0.00

PART NUMBER	PAGE	WEIGHT(g)
79024-BZ030-E0	516	
-BZ031-E1	516	0.00
-BZ240-E0	516	0.00
-BZ250-E0	516	0.00
-BZ260-E0	516	0.00
-BZ270-E0	516	0.00
-BZ350-B0	516	0.00
-BZ360-B0	516	0.00
79035-BZ150-	516	0.00
-BZ160-	516	0.00
-BZ230-	506	0.00
79036-BZ010-	506	0.00
79037-BZ130-	516	0.00
-BZ160-	516	0.00
-BZ210-	516	0.00
79038-BZ030-	516	0.00
-BZ060-	516	0.00
-BZ110-	516	0.00
79206-BZ050-	517	0.00
-BZ070-	517	0.00
79207-BZ020-	517	0.00
79208-BZ020-	517	0.00
79225-BZ040-B0	517	0.00
-BZ070-B0	514	0.00
-BZ080-B0	514	0.00
79236-BZ040-B0	517	0.00
-BZ070-B0	517	0.00
-BZ080-B0	517	0.00
-BZ090-B0	517	0.00
79246-BZ070-B0	517	0.00
79273-BZ040-B0	517	0.00
-BZ042-B0	505	0.00
79303-BZ100-	518	0.00
-BZ101-	518	0.00
-BZ120-	518	0.00
-BZ170-	518	0.00
-BZ180-	518	0.00
-BZ190-	518	0.00
79304-BZ010-	518	0.00
-BZ011-	518	0.00
-BZ030-	518	0.00
-BZ080-	518	0.00
-BZ090-	518	0.00
-BZ100-	518	0.00
79318-BZ010-	517	0.00
-BZ020-	517	0.00
-BZ030-	517	0.00
79328-BZ010-	517	0.00
-BZ020-	517	0.00
-BZ040-	517	0.00

PART NUMBER	PAGE	WEIGHT(g)
79360-BZ020-	518	
-BZ040-	518	0.00
-BZ041-	518	0.00
-BZ050-	504	0.00
-BZ070-	518	0.00
79370-BZ010-	504	0.00
79893-BZ010-	518	0.00
-BZ020-	518	0.00
79952-BZ040-B0	518	0.00
-BZ070-B0	514	0.00
-BZ080-B0	514	0.00
-BZ090-B0	514	0.00
-BZ100-B0	514	0.00
79959-BZ030-B0	518	0.00
80960-B9090-	289	0.00
-B9140-	289	0.00
81110-BZ180-	556	0.00
-BZ390-	556	0.00
-BZ430-	556	0.00
81116-BZ020-	556	0.00
81118-BZ010-	556	0.00
81125-BZ020-	556	0.00
81128-87205-	620	5.00
-B2090-	557	8.00
81130-BZ140-	556	0.00
-BZ260-	556	0.00
-BZ380-	556	0.00
81134-B4010-	234	0.00
81139-B2010-	556	47.00
81150-BZ180-	556	0.00
-BZ390-	556	0.00
-BZ430-	556	0.00
81156-BZ020-	556	0.00
81158-BZ010-	556	0.00
81170-BZ140-	556	0.00
-BZ260-	556	0.00
-BZ380-	556	0.00
81210-BZ160-	558	0.00
81211-BZ060-	558	0.00
81220-BZ160-	558	0.00
81221-BZ060-	558	0.00
81240-B0020-B0	565	0.00
-B4010-B0	565	0.00
-BZ010-B0	564	0.00
-BZ010-B1	564	0.00
81241-BZ010-	564	0.00
81270-BZ010-	562	23.00
81275-12501-	562	5.00
81496-B4010-	560	1.00
-BZ010-	560	0.00

PART NUMBER	PAGE	WEIGHT(g)
81550-BZ190-	560	
-BZ220-	560	0.00
-BZ350-	560	0.00
81551-BZ090-	561	0.00
-BZ240-	561	0.00
-BZ350-	561	0.00
81555-BZ060-	561	0.00
-BZ100-	561	0.00
-BZ190-	561	0.00
81559-B2020-	561	1.00
81560-BZ190-	561	0.00
-BZ220-	561	0.00
-BZ340-	561	0.00
81561-BZ090-	561	0.00
-BZ240-	561	0.00
-BZ350-	561	0.00
81565-BZ010-	561	0.00
-BZ050-	561	0.00
-BZ070-	561	0.00
81818-BZ150-	670	0.00
81910-BZ090-	563	0.00
81920-BZ090-	563	0.00
81936-BZ020-	662	2.00
81942-BZ430-	662	0.00
-BZ440-	662	0.00
-BZ750-	662	0.00
-BZ760-	662	0.00
-BZ760-	663	0.00
-BZ770-	663	0.00
81980-BZ030-	602	0.00
82046-BZ090-	582	0.00
-BZ230-	582	0.00
-BZ260-	582	0.00
-BZ300-	582	0.00
82111-BY560-	582	0.00
-BZB80-	582	0.00
-BZM30-	582	0.00
-BZQ70-	582	0.00
-BZR20-	582	0.00
-BZR40-	582	0.00
-BZR41-	582	0.00
-BZZ40-	582	0.00
-BZZ50-	582	0.00
82112-BZ110-	582	0.00
-BZ111-	582	0.00
-BZ120-	582	0.00
-BZ121-	582	0.00
-BZ450-	582	0.00
-BZ460-	582	0.00
82121-BZ670-	582	0.00

PART NUMBER	PAGE	WEIGHT(g)
82121-BZ700-	582	
-BZB40-	582	0.00
-BZB50-	582	0.00
-BZB51-	582	0.00
-BZB61-	582	0.00
-BZB90-	582	0.00
-BZB91-	582	0.00
-BZE20-	582	0.00
-BZE21-	582	0.00
-BZK20-	582	0.00
-BZK30-	582	0.00
82122-BZ250-	582	0.00
-BZ260-	582	0.00
82125-B1050-	261	50.00
82141-BXB70-	583	0.00
-BXC00-	583	0.00
-BXC20-	583	0.00
-BXC30-	583	0.00
-BYJ30-	583	0.00
-BYJ40-	583	0.00
-BYK00-	583	0.00
-BYK40-	583	0.00
-BYK70-	583	0.00
-BZS10-	582	0.00
-BZS11-	583	0.00
-BZS20-	582	0.00
-BZS20-	583	0.00
-BZS21-	583	0.00
-BZS30-	583	0.00
-BZV40-	582	0.00
-BZV41-	582	0.00
-BZV70-	582	0.00
-BZV71-	582	0.00
-BZV80-	582	0.00
-BZV81-	582	0.00
82151-BZ530-	583	0.00
-BZ560-	583	0.00
-BZ760-	583	0.00
-BZB00-	583	0.00
-BZB20-	583	0.00
-BZF30-	583	0.00
82152-BZ540-	583	0.00
-BZ560-	583	0.00
-BZ760-	583	0.00
-BZA90-	583	0.00
-BZC70-	583	0.00
-BZE40-	583	0.00
82153-BZ230-	583	0.00
-BZ250-	583	0.00
82161-BY250-	584	0.00

PART NUMBER	PAGE	WEIGHT(g)
82161-BY300-	584	
-BZF30-	583	0.00
-BZF31-	583	0.00
-BZF70-	583	0.00
-BZF71-	583	0.00
-BZQ20-	584	0.00
-BZT90-	584	0.00
-BZT91-	584	0.00
82171-BZ390-	584	0.00
82184-BZ370-	584	0.00
-BZ390-	584	0.00
-BZC10-	584	0.00
82185-BZ230-	584	0.00
-BZ420-	584	0.00
82223-BZ010-	602	0.00
-BZ070-	602	0.00
-BZ130-	602	0.00
82415-BZ140-	584	0.00
-BZ160-	584	0.00
82600-BZ080-	602	0.00
-BZ250-	602	0.00
-BZ430-	602	0.00
-BZ730-	602	0.00
-BZ731-	602	0.00
-BZA30-	602	0.00
82606-B0010-	656	2.00
82616-58010-	602	2.00
82627-BZ090-	584	0.00
82641-BZ010-	602	0.00
82660-BZ120-	602	0.00
82661-BZ070-	602	0.00
-BZ071-	602	0.00
-BZ140-	602	0.00
-BZ141-	602	0.00
82673-BZ050-	602	0.00
82711-BZ100-	630	1.00
82715-BZA50-	602	0.00
-BZD60-	602	0.00
-BZD60-	603	0.00
82817-BZ020-	584	0.00
-BZ050-	584	0.00
-BZ130-	603	0.00
-BZ180-	584	0.00
83181-B6010-	603	0.00
-BZ050-	603	0.00
-BZ080-	603	0.00
83301-BZ150-	603	0.00
-BZ190-	603	0.00
83390-B1010-	603	52.00
83530-52050-	603	35.00

PART NUMBER	PAGE	WEIGHT(g)
83530-97202-	603	
-97401-	603	33.00
-B0010-	603	0.00
83800-BY020-	585	0.00
-BY030-	585	0.00
-BY650-	585	0.00
-BY660-	585	0.00
-BYD20-	585	0.00
-BYD30-	585	0.00
-BYD70-	585	0.00
-BYD80-	585	0.00
-BZL90-	585	0.00
-BZL92-	585	0.00
-BZM00-	585	0.00
-BZM02-	585	0.00
-BZT60-	585	0.00
-BZT62-	585	0.00
-BZT80-	585	0.00
-BZZ40-	585	0.00
-BZZ50-	585	0.00
83852-BZ140-	585	0.00
-BZ170-	585	0.00
84113-BZ010-	663	0.00
84140-BZ011-	603	0.00
-BZ170-	603	0.00
-BZ180-	603	0.00
84210-BZ110-	603	0.00
84231-52020-	603	
-52020-	604	
-BZ010-	603	0.00
-BZ010-	604	0.00
84243-52010-	604	22.00
84248-BZ020-	246	0.00
-BZ040-	604	0.00
-BZ041-	604	0.00
84250-BZ080-B0	604	0.00
84306-B1010-	604	121.00
-BZ060-	604	0.00
-BZ160-	604	0.00
-BZ200-	604	0.00
84312-B2010-	604	
-BZ010-	604	0.00
84332-BZ110-	604	0.00
-BZ130-	604	0.00
84340-B2010-	604	
-BZ010-	604	0.00
-BZ040-	604	0.00
84345-B2010-	604	
-B2010-	605	
-BZ010-	604	0.00

PART NUMBER	PAGE	WEIGHT(g)
84345-BZ010-	605	
84380-87Z06-	605	0.00
84450-B2010-	605	
-BZ040-	605	0.00
84518-BZ020-	605	0.00
84520-97202-	605	16.00
-B4010-	605	32.00
84540-B0010-	605	144.00
-B0020-	605	0.00
84652-B2011-	605	
-BZ010-	605	0.00
-BZ020-	605	0.00
-BZ090-	605	0.00
-BZ250-	605	0.00
-BZ310-	605	0.00
84810-BZ090-	605	0.00
84820-BZ060-	605	0.00
-BZ170-	605	0.00
-BZ170-	606	0.00
-BZ200-	606	0.00
84870-BZ070-	606	0.00
-BZ071-	606	39.00
-BZ200-	606	0.05
84941-BZ010-	606	0.00
84999-B4010-	564	0.00
-B4010-	565	0.00
85110-BZ150-	620	0.00
-BZ151-	620	0.00
-BZ230-	620	0.00
85130-BZ130-	622	0.00
85131-BZ020-	622	0.00
85150-BZ150-	620	0.00
-BZ230-	620	0.00
85176-BZ010-	622	0.00
85211-BZ060-	620	0.00
-BZ250-	620	0.00
85212-B4010-	620	
-BZ060-	620	0.00
-BZ280-	620	0.00
85214-B2030-	620	
-BZ090-	620	0.00
-BZ220-	620	0.00
-BZ250-	620	0.00
-BZ280-	620	0.00
85221-BZ140-	620	0.00
-BZ250-	620	0.00
85222-BZ140-	620	0.00
-BZ290-	620	0.00
85241-BZ020-	623	0.00
85242-BZ120-	623	0.00

PART NUMBER	PAGE	WEIGHT(g)
85243-BZ020-	623	
85292-12020-	621	2.00
-BZ110-	621	0.00
85315-BZ120-	625	0.00
-BZ130-	625	0.00
-BZ160-	625	0.00
85317-BZ080-	625	0.00
-BZ080-	629	0.00
85330-BZ010-	629	64.00
-BZ030-	629	0.00
-BZ060-	625	65.00
-BZ080-	625	0.00
-BZ120-	625	0.00
-BZ130-	625	0.00
-BZ180-	625	0.00
85332-87401-	625	7.00
-97202-	625	5.00
85349-87201-	625	1.00
-87201-	629	1.00
-87602-	629	1.00
85355-87503-	626	1.00
-87503-	629	1.00
-87701-	626	1.00
85370-BZ190-	626	0.00
-BZ530-	629	0.00
-BZ540-	629	0.00
-BZ580-	629	0.00
-BZ590-	626	0.00
-BZ880-	625	0.00
-BZ890-	626	0.00
-BZA10-	629	0.00
-BZA30-	629	0.00
85373-97202-	625	4.00
-97202-	629	4.00
-BZ010-	630	0.00
85374-BZ250-	626	0.00
-BZ270-	626	0.00
-BZ380-	626	0.00
-BZ390-	626	0.00
-BZ400-	626	0.00
-BZ410-	630	0.00
-BZ420-	630	0.00
-BZ430-	630	0.00
-BZ440-	626	0.00
-BZ440-	630	0.00
-BZ480-	630	0.00
-BZ670-	630	0.00
-BZ880-	626	0.00
-BZA30-	630	0.00
-BZA50-	630	0.00

PART NUMBER	PAGE	WEIGHT(g)
85374-BZB00-	626	
-BZB10-	626	0.00
85376-B1010-	625	4.00
-B1010-	626	4.00
85381-BZ130-	625	0.00
-BZ220-	625	0.00
85391-BZ070-	629	0.00
85530-33020-	606	0.00
-BZ080-	606	20.00
85535-47020-	606	0.00
-BZ040-	606	8.00
-BZ061-	606	0.00
-BZ071-	606	0.00
85710-BZ040-	449	0.00
-BZ040-	462	0.00
-BZ041-	449	0.00
-BZ041-	462	0.00
-BZ042-	462	0.00
-BZ170-	449	0.00
85720-BZ040-	449	0.00
-BZ040-	462	0.00
-BZ041-	449	401.00
-BZ041-	462	401.00
-BZ042-	449	0.00
-BZ042-	462	0.00
85918-BZ060-	606	0.00
-BZ061-	606	0.00
85933-B0010-	607	0.00
86150-BZ020-	633	0.00
-BZ030-	633	0.00
86211-BZ150-	632	0.00
-BZ151-	632	0.00
-BZ300-	632	0.00
86212-BZ150-	632	0.00
-BZ151-	632	0.00
-BZ300-	632	0.00
86221-BZ020-	632	0.00
86269-BZ040-B0	633	0.00
86279-BZ030-B0	633	0.00
86300-BZ210-	636	0.00
-BZ390-A0	636	0.00
-BZ390-A1	636	0.00
-BZ390-B0	636	0.00
-BZ390-B1	636	0.00
-BZ390-C0	636	0.00
-BZ390-D0	636	0.00
-BZ390-E1	636	0.00
-BZ390-J0	636	0.00
86316-BZ190-	636	0.00
-BZ510-	636	0.00

PART NUMBER	PAGE	WEIGHT(g)
86316-BZ540-	636	
86510-BZ130-	637	0.00
-BZ160-	637	0.00
86520-BZ090-	637	0.00
-BZ130-	637	0.00
-BZ220-	637	0.00
86830-B2010-	606	
87030-BZ160-	653	0.00
-BZ161-	653	0.00
-BZ162-	653	0.00
-BZ163-	653	0.00
87103-BZ100-	655	0.00
-BZ140-	654	0.00
-BZ170-	655	0.00
-BZ180-	655	0.00
87114-BZ020-	653	36.00
87125-BZ030-B1	435	0.00
87138-BZ070-	653	0.00
-BZ140-	653	0.00
87220-BZ290-	663	0.00
-BZ291-	663	0.00
87223-BZ100-	663	0.00
-BZ110-	663	0.00
-BZ120-	663	0.00
-BZ130-	663	0.00
-BZ550-	663	0.00
87268-BZ020-	550	0.00
87810-BZ070-	641	0.00
87828-BZ010-	641	0.00
87834-BZ051-B1	641	0.00
87910-BZ430-	641	0.00
-BZ471-	641	0.00
-BZ590-	641	0.00
-BZ600-	641	0.00
-BZ601-	641	0.00
-BZB20-	641	0.00
-BZB30-	641	0.00
87915-BZ290-	641	0.00
-BZ310-	641	0.00
-BZ520-	641	0.00
87917-BZ110-	641	0.00
-BZ120-	641	0.00
-BZ180-	641	0.00
8791A-BZ020-	641	0.00
8791B-BZ020-	641	0.00
87940-BZ360-	641	0.00
-BZ360-	642	0.00
-BZ411-	642	0.00
-BZ590-	642	0.00
-BZ600-	641	0.00

PART NUMBER	PAGE	WEIGHT(g)
87940-BZ601-	641	
-BZD50-	642	0.00
-BZD60-	642	0.00
87945-BZ290-	642	0.00
-BZ310-	642	0.00
-BZ530-	642	0.00
87947-BZ110-	642	0.00
-BZ120-	642	0.00
-BZ180-	642	0.00
8794A-BZ020-	642	0.00
8794B-BZ020-	642	0.00
88304-BZ060-	653	0.00
-BZ070-	653	0.00
88318-87704-	673	1.00
-87705-	673	1.00
-87706-	673	1.00
88320-BZ230-	672	0.00
-BZ240-	672	0.00
-BZ290-	672	0.00
-BZ310-	672	0.00
88329-BZ020-	672	0.00
88335-14020-	673	1.00
88345-BZ050-	674	0.00
-BZ060-	674	0.00
88374-87601-	667	1.00
88375-87601-	667	3.00
-87603-	667	3.00
88403-BZ080-	673	250.00
88410-BZ220-	673	0.00
-BZ230-	673	0.00
-BZ300-	673	0.00
-BZ300-	674	0.00
88411-BZ050-	672	0.00
-BZ130-	672	0.00
-BZ190-	672	0.00
88412-BZ110-	672	0.00
-BZ120-	672	0.00
-BZ130-	672	0.00
88431-BZ130-	674	0.00
88460-BZ180-	667	0.00
-BZ230-	667	0.00
-BZ240-	667	0.00
88461-BZ060-	667	0.00
88463-BZ160-	663	0.00
-BZ220-	667	0.00
-BZ230-	667	0.00
88470-BZ010-	663	0.00
-BZ011-	663	0.00
-BZ050-	663	0.00
88474-B2010-	667	65.00

PART NUMBER	PAGE	WEIGHT(g)
88474-BZ010-	667	
88502-BZ040-	655	0.00
-BZ140-	655	0.00
88504-BZ030-	653	0.00
-BZ030-	654	0.00
88510-BZ170-	653	0.00
-BZ171-	653	0.00
-BZ250-	653	0.00
-BZ251-	653	0.00
-BZ252-	653	0.00
-BZ260-	653	0.00
-BZ261-	653	0.00
-BZ262-	653	0.00
-BZ291-	653	0.00
-BZ292-	653	0.00
88515-BZ010-	654	0.00
-BZ050-	654	0.00
-BZ150-	654	0.00
88519-87701-	654	6.00
88539-BZ190-	654	0.00
-BZ220-	654	0.00
-BZ320-	654	0.00
88548-BZ020-	655	0.00
88550-BZ070-	655	1,110.00
88561-BZ060-	667	0.00
-BZ200-	667	0.00
-BZ210-	667	0.00
-BZ220-	667	0.00
-BZ280-	667	0.00
-BZ370-	667	0.00
-BZ380-	667	0.00
-BZ400-	667	0.00
-BZ550-	667	0.00
-BZ560-	667	0.00
-BZ580-	667	0.00
88568-BZ040-	655	0.00
-BZ050-	655	0.00
-BZ060-	655	0.00
88573-BZ010-B1	435	0.00
88578-12100-	656	7.00
-BZ490-	656	0.00
-BZ570-	655	0.00
-BZ580-	655	0.00
88605-BZ050-	656	0.00
-BZ060-	656	0.00
-BZ090-	656	0.00
-BZ091-	656	0.00
88611-BZ020-B1	663	0.00
-BZ080-B0	663	0.00
88619-BZ080-	655	0.00

PART NUMBER	PAGE	WEIGHT(g)
88625-BZ060-	656	
88635-BZ010-	656	0.00
-BZ020-	656	0.00
88645-87602-	667	20.00
-87602-	668	20.00
88688-BZ150-	674	0.00
-BZ200-	674	0.00
88711-BZ360-	668	0.00
-BZ380-	668	0.00
-BZ550-	668	0.00
-BZ560-	668	0.00
-BZ561-	668	0.00
88712-BZ420-	668	0.00
-BZ440-	668	0.00
-BZ480-	668	0.00
-BZ490-	668	0.00
-BZ590-	668	0.00
-BZ591-	668	0.00
88714-87Z03-	653	0.00
-BZ090-	653	0.00
88716-BZ550-	668	0.00
-BZ730-	668	0.00
-BZ750-	669	0.00
-BZ810-	668	0.00
-BZB00-	668	0.00
-BZB10-	668	0.00
-BZB30-	668	0.00
-BZB31-	668	0.00
-BZB70-	668	0.00
88717-BZ280-	669	0.00
-BZ300-	670	0.00
-BZ400-	669	0.00
-BZ400-	670	0.00
-BZ401-	670	0.00
88718-87732-	669	
-BZ030-	669	0.00
-BZ040-	669	0.00
-BZ240-	669	0.00
-BZ280-	669	0.00
-BZ550-	669	0.00
-BZ620-	669	0.00
-BZ660-	669	0.00
-BZ720-	669	0.00
-BZ730-	655	0.00
-BZ731-	655	0.00
88719-B2010-	669	25.00
-B2020-	669	25.00
88839-BZ010-	654	0.00
-BZ011-	654	0.00
88888-BZ010-	655	0.00

PART NUMBER	PAGE	WEIGHT(g)
88897-87Z13-	657	
-87Z36-	654	0.00
-BZ160-	656	0.00
-BZ160-	657	0.00
89070-BZ120-	478	0.00
-BZ130-	478	0.00
89071-BZ050-	478	0.00
89170-BZ380-	617	0.00
-BZ440-	617	0.00
-BZ620-	617	0.00
89173-BZ080-	617	0.00
-BZ120-	617	0.00
89174-BZ040-	617	0.00
89237-BZ040-	617	0.00
89413-97202-	611	20.00
89421-BZ010-	607	0.00
89422-33030-	607	
-87204-	607	29.00
-B0010-	607	0.00
-BZ010-	607	0.00
-BZ030-	607	0.00
89424-87703-	607	8.00
89439-BZ090-	607	0.00
89452-97401-	190	27.00
-BZ010-	190	0.00
89465-BZ280-	607	0.00
-BZ300-	607	0.00
-BZ340-	607	0.00
-BZ430-	607	0.00
89467-BZ010-	607	0.00
89470-BZ020-	168	0.00
89530-B0120-	607	0.00
-B0121-	607	
-B0121-	608	
89539-BZ130-	610	0.00
-BZ310-	610	0.00
89542-BZ090-	613	0.00
89543-BZ090-	613	0.00
89545-BZ030-	613	0.00
89546-BZ030-	613	0.00
89547-97506-	613	63.00
89560-BY050-	610	0.00
-BY060-	610	0.00
-BY070-	610	0.00
-BY080-	610	0.00
-BY090-	610	0.00
-BY100-	610	0.00
-BZ830-	610	0.00
-BZ831-	610	0.00
-BZ840-	610	0.00

PART NUMBER	PAGE	WEIGHT(g)
89560-BZ841-	610	
-BZC00-	610	0.00
-BZK20-	610	0.00
-BZK21-	610	0.00
-BZK22-	610	0.00
-BZK30-	610	0.00
-BZK31-	610	0.00
-BZK32-	610	0.00
-BZK40-	610	0.00
-BZK41-	610	0.00
-BZK42-	610	0.00
-BZK50-	610	0.00
-BZK51-	610	0.00
-BZK52-	610	0.00
89615-20090-	608	
-BZ010-	608	0.00
-BZ030-	608	0.00
-BZ040-	608	45.00
89650-BZ020-	608	0.00
-BZ100-	608	0.00
-BZ290-	608	0.00
89690-97202-	190	0.00
-B1010-	190	
-BZ010-	190	0.00
89708-BZ040-	478	0.00
-BZ050-	478	0.00
89747-30040-	614	17.00
89751-BZ040-	478	0.00
89752-BZ040-	479	0.00
-BZ120-	479	0.00
89780-BZ140-	618	0.00
89782-BZ080-	618	0.00
90041-01421-	230	
-01494-	267	19.00
-01659-	322	0.00
-01659-	323	0.00
-01661-	333	0.00
-01661-	334	0.00
-01662-	333	112.00
-01664-	331	128.00
-01710-	321	96.00
-01710-	322	96.00
-05032-	113	21.00
-05071-	235	39.00
-05122-	239	7.00
-05177-	546	27.00
-05207-	355	6.00
-05228-	307	46.00
-05271-	97	43.00
-05273-	239	9.00

PART NUMBER	PAGE	WEIGHT(g)
90041-05281-	239	
-05331-	113	114.00
-05340-	236	21.00
-05375-	330	71.00
-05375-	331	71.00
-05378-	332	130.00
-05395-	113	22.00
-05404-	245	14.00
-05407-	332	77.00
-05407-	333	77.00
-05412-	264	13.00
-05445-	113	119.00
-05450-	322	0.00
-05450-	323	0.00
-05481-	546	39.00
-05482-	322	108.00
-05482-	323	108.00
-05511-	263	9.00
-05595-	239	8.00
-05596-	239	10.00
-10041-	86	54.00
-10045-	86	45.00
-16395-	153	9.00
-16420-	86	0.00
-19291-	272	11.00
-19411-	672	24.00
-19411-	673	24.00
-19677-	355	6.00
-19911-	88	
-20039-	272	13.00
-20084-	550	23.00
-20113-	88	1.00
-20203-	245	6.00
-20255-	299	0.00
-20261-	327	0.00
-20308-	338	0.00
-67041-	446	2.00
-67041-	459	2.00
-70014-	291	
-70260-	327	16.00
-70291-	112	4.00
-70366-	331	24.00
-70366-	333	24.00
-70366-	334	24.00
-70367-	322	15.00
-70367-	323	15.00
-70367-	327	15.00
-70391-	321	21.00
-70391-	322	21.00
-79111-	531	4.00

PART NUMBER	PAGE	WEIGHT(g)	PART NUMBER	PAGE	WEIGHT(g)
90041-79124-	302		90043-31025-	208	
-79303-	326	12.00	-39029-	153	1.00
-79305-	122	58.00	-39096-	87	5.00
-79316-	326	0.00	-39124-	87	10.00
-79318-	331	23.00	-41041-	98	20.00
-79318-	333	23.00	-41041-	245	20.00
-79327-	217		-41046-	272	37.00
-89082-	346		-41068-	280	36.00
90042-01637-	86	4.00	-41075-	102	9.00
-02109-	86	9.00	-41076-	99	26.00
-06064-	117	1.00	-41087-	98	30.00
-40075-	299	12.00	-44019-	127	14.00
-40151-	299	11.00	-44022-	101	12.00
-43029-	301	4.00	-45010-	131	7.00
-43029-	302	4.00	-45040-	245	9.00
-50142-	102		-60003-	230	
-50152-	112	7.00	-63246-	215	
-50152-	113	7.00	-63247-	217	
-50196-	112	7.00	-63273-	257	113.00
-53010-	88	1.00	-63277-	257	57.00
-53010-	102	1.00	-63311-	216	
-53013-	87		-63312-	217	
-53013-	98		-63313-	224	
-54027-	113	1.00	-63368-	287	
-80030-	113	3.00	-63369-	287	
-80034-	114	1.00	-64034-	221	
90043-01136-	188	1.00	-64119-	219	
-01161-	239	6.00	-64130-	219	
-01193-	244	1.00	-64142-	216	
-01253-	131	1.00	-64143-	219	
-01262-	88	1.00	-66075-	277	
-01262-	102	1.00	-66078-	273	
-01263-	189	1.00	-66080-	273	
-01278-	603	1.00	-74043-	252	18.00
-01278-	611	1.00	-74043-	257	18.00
-01279-	261	1.00	-74044-	252	17.00
-01280-	261	1.00	-74045-	252	19.00
-01281-	611	1.00	-74047-	257	23.00
-01295-	254	3.00	-74051-	257	10.00
-01296-	254	3.00	-85174-	325	12.00
-01321-	154	2.00	-85174-	326	12.00
-01352-	301	1.00	-86103-	332	2.00
-01363-	189	0.00	-86123-	196	1.00
-01364-	261	1.00	-86132-	235	
-11256-	263	2.00	90044-01079-	318	21.00
-11285-	248	14.00	-01081-	266	37.00
-11291-	281		-01094-	127	34.00
-11336-	239	16.00	-04120-	97	58.00
-11368-	273		-30237-	273	1.00
-11428-	101		-30237-	280	1.00

PART NUMBER	PAGE	WEIGHT(g)	PART NUMBER	PAGE	WEIGHT(g)
90044-30239-	128		90044-67473-	146	
-30258-	128	2.00	-67473-	147	
-30281-	98	1.00	-67473-	148	
-30281-	245	1.00	-67474-	471	1.00
-30290-	99	2.00	-67482-	147	23.00
-30291-	546	1.00	-67485-	143	19.00
-30302-	266	1.00	-67485-	144	19.00
-30317-	245	2.00	-67493-	146	0.00
-30330-	245	1.00	-67493-	148	0.00
-40046-	86	21.00	-67499-	347	4.00
-46059-	320		-67555-	343	1.00
-64299-	320		-67567-	346	1.00
-64371-	545	1.00	-67579-B0	376	1.00
-64563-	146	2.00	-67579-B0	381	1.00
-64596-	320	6.00	-67579-B0	516	1.00
-64634-	355	2.00	-67579-B2	409	0.00
-64634-	552	2.00	-67579-C2	381	1.00
-64655-	320		-67579-C2	516	1.00
-64655-	548		-67579-E2	409	0.00
-64659-	355	1.00	-67579-E4	376	1.00
-64668-	548	7.00	-67579-E5	376	0.00
-64710-	319	6.00	-67625-	146	
-64710-	320	6.00	-67625-	148	
-64713-	319	2.00	-68076-	197	1.00
-64716-	548	6.00	-68076-	300	1.00
-64742-	319		-68185-C0	504	1.00
-64759-	168	2.00	-68280-	351	1.00
-64765-	147		-68320-	343	0.00
-64774-	168	0.00	-68320-	352	0.00
-64781-	548	7.00	-68337-	300	1.00
-64797-	168	0.00	-68378-	343	
-64813-	108	7.00	-68378-	352	
-64879-	355	0.00	-69001-	168	0.00
-64879-	552	0.00	-80126-	630	1.00
-64881-	147	0.00	-80370-	630	
-65441-	319	3.00	-80392-	164	2.00
-65441-	320	3.00	-80416-	654	
-66010-	147	0.00	-80454-	625	2.00
-66030-	146	13.00	-80530-	163	5.00
-66030-	148	13.00	-80667-	355	1.00
-66054-	143	8.00	90045-01801-	245	1.00
-67029-	143	1.00	-01951-	245	1.00
-67161-	304	4.00	-08388-	263	7.00
-67244-	547	8.00	-08419-	263	8.00
-67298-B0	404	0.00	-20107-	219	
-67400-	143	1.00	-20263-	219	
-67420-	163	15.00	-20263-	220	
-67433-	163	13.00	-20264-	219	
-67435-	143	13.00	-20264-	220	
-67467-B6	434	1.00	-20265-	219	

PART NUMBER	PAGE	WEIGHT(g)
90045-20265-	220	
-20266-	219	
-20266-	220	
-20267-	219	
-20267-	220	
-20268-	220	
-20269-	220	
-20270-	220	
-20270-	221	
-20271-	215	
-20271-	216	
-20272-	215	
-20272-	216	
-20273-	215	
-20273-	216	
-20274-	215	
-20274-	216	
-20275-	215	
-20275-	216	
-20276-	215	
-20276-	216	
-20277-	215	
-20277-	216	
-20278-	215	
-20278-	216	
-20279-	217	
-20279-	218	
-20280-	217	
-20280-	218	
-20281-	217	
-20281-	218	
-20282-	217	
-20282-	218	
-20283-	217	
-20283-	218	
-20284-	217	
-20284-	218	
-20285-	217	
-20285-	218	
-20286-	217	
-20286-	218	
-20292-	117	6.00
-21111-	286	17.50
-21111-	287	17.50
-21157-	217	
-21164-	253	21.00
-21165-	253	24.00
-21166-	253	24.00
-21167-	253	28.00
-21168-	253	0.00

PART NUMBER	PAGE	WEIGHT(g)
90045-21169-	253	
-21170-	253	14.00
-21171-	253	17.00
-21172-	253	19.00
-21173-	253	22.00
-21174-	258	32.00
-21175-	258	0.00
-21176-	255	19.00
-21177-	255	22.00
-21178-	255	26.00
-21179-	255	29.00
-21185-	254	12.00
-21194-	258	17.00
-41152-	362	
-41263-	362	
-64550-	275	
-64550-	276	
-64551-	275	
-64551-	276	
-64552-	275	
-64552-	276	
-64553-	275	
-64553-	276	
-64554-	275	
-64554-	276	
-64555-	275	
-64555-	276	
-64556-	275	
-64556-	276	
-64557-	275	
-64557-	276	
-64558-	275	
-64558-	276	
-64559-	275	
-64559-	276	
-64560-	275	
-64560-	276	
-64561-	275	
-64561-	276	
-64562-	275	
-64562-	276	
-64563-	275	
-64563-	276	
-64563-	277	
-64564-	275	
-64564-	276	
-64564-	277	
-64565-	275	
-64565-	276	
-64565-	277	

PART NUMBER	PAGE	WEIGHT(g)
90045-64566-	275	
-64566-	276	
-64566-	277	
-64585-	273	
-64585-	274	
-64586-	273	
-64586-	274	
-64587-	273	
-64587-	274	
-64588-	273	
-64588-	274	
-64589-	273	
-64589-	274	
-64590-	273	
-64590-	274	
-64591-	273	
-64591-	274	
-64592-	273	
-64592-	274	
-64593-	273	
-64593-	274	
-64594-	273	
-64594-	274	
-64595-	273	
-64595-	274	
-64595-	275	
-64596-	273	
-64596-	274	
-64596-	275	
-64597-	273	
-64597-	274	
-64597-	275	
90048-01037-	239	21.00
-01040-	97	44.00
-08005-	97	30.00
-13013-	119	1.00
-32117-	149	56.00
-33088-	144	94.00
-51196-	172	
-51197-	172	
-71195-	392	9.00
-71238-	469	1.00
-71320-	398	0.00
90049-02019-	285	11.00
-11036-	285	28.00
-11064-	285	39.00
-12030-	286	35.00
-12055-	282	40.00
-15026-	208	12.00
-15026-	280	12.00

PART NUMBER	PAGE	WEIGHT(g)
90049-15048-	248	
-15050-	248	1.00
-15052-	280	
-15054-	248	18.00
-51148-	560	
-51153-	564	2.00
-51161-	561	9.00
-51179-	556	13.00
-51185-	558	19.00
-88004-	607	13.00
9004A-10091-	355	0.00
-10110-	307	18.00
-10121-	340	0.00
-10122-	230	0.00
-10124-	128	0.00
-10136-	338	46.00
-10144-	673	0.00
-10146-	673	0.00
-10148-	321	0.00
-10148-	322	0.00
-10149-	332	0.00
-10152-	333	0.00
-10152-	334	0.00
-10157-	333	0.00
-10159-	331	0.00
-10160-	332	0.00
-10160-	333	0.00
-10161-	322	0.00
-10161-	323	0.00
-10171-	307	0.00
-10186-	546	0.00
-10190-	230	18.00
-10200-	239	0.00
-10206-	268	0.00
-10213-	236	0.00
-10217-	199	0.00
-10221-	160	0.00
-10223-	235	0.00
-10226-	327	0.00
-11053-	124	0.00
-11201-	673	0.00
-11219-	196	0.00
-11219-	197	0.00
-11228-	228	0.00
-11230-	229	0.00
-11235-	355	9.00
-11252-	545	0.00
-11253-	355	0.00
-11267-	338	0.00
-11304-	88	0.00

PART NUMBER	PAGE	WEIGHT(g)	PART NUMBER	PAGE	WEIGHT(g)
9004A-11315-	338		9004A-30047-	98	
-11317-	327	0.00	-30049-	212	0.00
-11318-	327	0.00	-30055-	188	0.00
-11321-	673	0.00	-30056-	125	2.00
-11347-	322	0.00	-30057-	127	0.00
-11347-	323	0.00	-30058-	98	1.00
-11360-	268	0.00	-30059-	86	0.00
-12001-	153	0.00	-30059-	101	0.00
-15016-	125	0.00	-31012-	124	0.00
-16093-	446	3.00	-31013-	208	6.00
-16093-	459	3.00	-31013-	209	6.00
-17135-	302	0.00	-31014-	211	16.00
-17176-	291	0.00	-31015-	208	8.00
-17200-	217	0.00	-31017-	227	5.00
-17201-	217	0.00	-31018-	281	0.00
-17214-	304	0.00	-31019-	102	0.00
-17218-	622	3.00	-31020-	102	0.00
-17229-	304	0.00	-31021-	101	0.00
-17249-	327	0.00	-31022-	117	0.00
-17251-	321	0.00	-31023-	118	0.00
-17251-	322	0.00	-31043-	273	0.00
-17254-	331	0.00	-31056-	102	0.00
-17254-	333	0.00	-31057-	101	0.00
-17254-	334	0.00	-33016-	208	0.00
-17255-	322	0.00	-34005-	124	0.00
-17255-	323	0.00	-34010-	211	0.00
-17255-	327	0.00	-34015-	98	0.00
-17256-	326	0.00	-36011-	216	0.00
-17257-	331	0.00	-36012-	281	0.00
-17257-	333	0.00	-36029-	277	0.00
-18034-	346	0.00	-36044-	230	0.00
-19002-	172	225.00	-36046-	219	0.00
-19003-	86	0.00	-36047-	215	0.00
-19004-	101	0.00	-36048-	224	0.00
-20015-	229	6.00	-36050-	217	0.00
-20017-	332	38.00	-36051-	216	0.00
-20020-	323	0.00	-36052-	219	0.00
-20029-	332	0.00	-36053-	219	0.00
-20039-	333	28.00	-36054-	217	0.00
-24023-	301	0.00	-36055-	217	0.00
-25002-	124	0.00	-36056-	221	0.00
-25021-	102	0.00	-36057-	219	0.00
-25029-	230	2.00	-36058-	216	0.00
-25029-	231	2.00	-36085-	273	0.00
-25035-	113	7.60	-36089-	273	0.00
-25038-	87	0.00	-36090-	287	0.00
-25044-	97	8.00	-36091-	287	0.00
-30011-	127	0.00	-36093-	287	0.00
-30021-	301	0.00	-36103-	216	0.00
-30037-	124	0.00	-36109-	215	125.00

9004A - 9004A

PART NUMBER	PAGE	WEIGHT(g)	PART NUMBER	PAGE	WEIGHT(g)
9004A-36110-	224		9004A-46290-	319	
-36111-	217	105.00	-46292-	147	0.00
-38011-	552	0.00	-46296-	320	0.00
-38021-	197	2.00	-46299-	320	0.00
-38021-	299	2.00	-46299-	548	0.00
-38031-	674	0.00	-46302-	439	0.00
-38070-	197	0.00	-46302-	453	0.00
-40021-	97	0.00	-46313-	548	0.00
-43004-	230	1.00	-46314-	355	0.00
-43005-	229	1.00	-46314-	552	0.00
-43005-	230	1.00	-46318-	548	0.00
-43006-	211	1.00	-46321-	319	0.00
-43022-	98	0.00	-46323-	338	2.00
-43023-	266	0.00	-46323-	339	2.00
-44063-	320	0.00	-46323-	343	2.00
-46094-	320	0.00	-46323-	352	2.00
-46126-	296	0.00	-46323-	353	2.00
-46128-	163	33.00	-46333-	355	0.00
-46128-	164	33.00	-46333-	356	0.00
-46130-	365	0.00	-46334-	346	0.00
-46131-B0	365	2.00	-46343-	143	0.00
-46131-B0	403	2.00	-46343-	144	0.00
-46131-B0	404	2.00	-46345-	144	0.00
-46131-B0	428	2.00	-46346-	147	0.00
-46131-C1	404	2.00	-46348-	143	0.00
-46131-C1	428	2.00	-46351-	144	0.00
-46131-E1	428	0.00	-46352-	353	0.00
-46131-E2	428	0.00	-46356-	347	0.00
-46132-B0	405	0.00	-46357-B0	434	0.00
-46132-B0	428	0.00	-46358-B0	434	0.00
-46132-C0	405	0.00	-46380-	343	0.00
-46132-C0	428	0.00	-46388-	376	0.00
-46132-E1	405	0.00	-46395-	147	0.00
-46132-E1	428	0.00	-48017-	146	6.00
-46132-E2	428	0.00	-48039-	89	0.00
-46133-	296	0.00	-48040-	107	5.00
-46133-	297	0.00	-48053-	654	0.00
-46138-	293	0.00	-48054-	355	3.00
-46143-	504	2.00	-48060-	163	4.00
-46143-	509	2.00	-48060-	164	4.00
-46242-	545	0.00	-50032-	228	0.00
-46258-	351	0.00	-50033-	228	0.00
-46275-	405	2.00	-50080-	118	0.00
-46275-	429	2.00	-50087-	118	0.00
-46275-	430	2.00	-50088-	125	0.00
-46275-	431	2.00	-50125-	230	1.00
-46275-	432	2.00	-52006-	308	0.00
-46275-	439	2.00	-52038-	219	0.00
-46275-	453	2.00	-52039-	219	0.00
-46289-	297	0.00	-52040-	219	0.00

PART NUMBER	PAGE	WEIGHT(g)
9004A-52041-	219	
-52042-	219	0.00
-52043-	220	0.00
-52044-	220	0.00
-52045-	220	0.00
-52046-	215	0.00
-52047-	215	0.00
-52048-	215	0.00
-52049-	215	0.00
-52050-	215	0.00
-52051-	215	0.00
-52052-	215	0.00
-52053-	215	0.00
-52054-	217	0.00
-52055-	217	0.00
-52056-	217	0.00
-52057-	217	0.00
-52058-	217	0.00
-52059-	217	0.00
-52060-	217	0.00
-52061-	217	0.00
-52062-	217	0.00
-52063-	219	0.00
-52071-	220	0.00
-52072-	220	0.00
-52073-	220	0.00
-52074-	220	0.00
-52075-	220	0.00
-52076-	220	0.00
-52077-	220	0.00
-52078-	220	0.00
-52078-	221	0.00
-52079-	215	0.00
-52079-	216	0.00
-52080-	215	0.00
-52080-	216	0.00
-52081-	215	0.00
-52081-	216	0.00
-52082-	215	0.00
-52082-	216	0.00
-52083-	215	0.00
-52083-	216	0.00
-52084-	215	0.00
-52084-	216	0.00
-52085-	215	0.00
-52085-	216	0.00
-52086-	215	0.00
-52086-	216	0.00
-52087-	217	0.00
-52087-	218	0.00

PART NUMBER	PAGE	WEIGHT(g)
9004A-52088-	217	
-52088-	218	
-52089-	217	0.00
-52089-	218	0.00
-52090-	217	0.00
-52090-	218	0.00
-52091-	217	0.00
-52091-	218	0.00
-52092-	217	0.00
-52092-	218	0.00
-52093-	217	0.00
-52093-	218	0.00
-52094-	218	0.00
-52095-	219	0.00
-53002-	404	1.00
-54003-	196	2.00
-54003-	299	2.00
-54009-	552	0.00
-54015-	362	0.00
-54016-	469	5.00
-54028-	362	0.00
-56051-	273	0.00
-56051-	274	0.00
-56052-	273	0.00
-56052-	274	0.00
-56053-	273	0.00
-56053-	274	0.00
-56054-	273	0.00
-56054-	274	0.00
-56055-	273	0.00
-56055-	274	0.00
-56056-	273	0.00
-56056-	274	0.00
-56057-	273	0.00
-56057-	274	0.00
-56058-	273	0.00
-56058-	274	0.00
-56059-	273	0.00
-56059-	274	0.00
-56060-	273	0.00
-56060-	274	0.00
-56061-	273	0.00
-56061-	274	0.00
-56061-	275	0.00
-56062-	273	0.00
-56062-	274	0.00
-56062-	275	0.00
-56063-	273	0.00
-56063-	274	0.00
-56063-	275	0.00

PART NUMBER	PAGE	WEIGHT(g)
9004A-56064-	275	
-56064-	276	
-56065-	275	0.00
-56065-	276	0.00
-56066-	275	0.00
-56066-	276	0.00
-56067-	275	0.00
-56067-	276	0.00
-56068-	275	0.00
-56068-	276	0.00
-56069-	275	0.00
-56069-	276	0.00
-56070-	275	0.00
-56070-	276	0.00
-56071-	275	0.00
-56071-	276	0.00
-56072-	275	0.00
-56072-	276	0.00
-56073-	275	0.00
-56073-	276	0.00
-56074-	275	0.00
-56074-	276	0.00
-56075-	275	0.00
-56075-	276	0.00
-56076-	275	0.00
-56076-	276	0.00
-56077-	275	0.00
-56077-	276	0.00
-56077-	277	0.00
-56078-	275	0.00
-56078-	276	0.00
-56078-	277	0.00
-56079-	275	0.00
-56079-	276	0.00
-56079-	277	0.00
-56080-	275	0.00
-56080-	276	0.00
-56080-	277	0.00
-81005-	560	0.00
-81006-	562	0.00
-81023-	561	0.00
-81025-	561	0.00
-81026-	561	0.00
-81027-	561	0.00
-81030-	557	0.00
-81031-	556	7.00
-81032-	556	0.00
-81050-	560	0.00
-91014-	172	0.00
-91015-	172	0.00

PART NUMBER	PAGE	WEIGHT(g)
9004A-91017-	149	
-91027-	144	0.00
-91032-	172	0.00
-91039-	172	0.00
-91057-	149	0.00
-91067-	149	0.00
-91068-	172	0.00
-91069-	168	78.00
-93003-	208	0.00
-93004-	280	0.00
-93005-	144	0.00
-94040-	318	0.00
-94079-	197	0.00
-94102-	318	0.00
-94106-	318	0.00
-94118-	318	0.00
-94124-	285	0.00
-94125-	285	0.00
-95051-	392	0.00
-95058-	392	0.00
-98006-	602	13.00
-98006-	606	13.00
-98006-	607	13.00
-98010-	602	0.00
-98011-	606	0.00
9004B-03001-	176	0.00
-03002-	176	0.00
-03004-	182	0.00
-10015-	183	0.00
-10018-	182	0.00
-20007-	183	0.00
-37012-	176	0.00
-37016-	176	107.00
-43001-	183	0.00
-52011-	183	0.00
-52012-	183	0.00
-91001-	656	0.00
-91002-	630	0.00
9004C-33001-	655	4.00
-37002-	176	107.00
-37008-	176	105.00
-82001-	557	9.00
90068-14041-	88	2.00
90075-60028-	556	12.00
90080-43027-	89	0.00
90099-04349-	674	0.00
-04349-000	674	
-07114-	673	0.05
-07125-	673	0.00
-07125-000	673	

PART NUMBER	PAGE	WEIGHT(g)
90105-08455-	87	
-T0271-	87	0.00
-T0283-	88	0.00
-T0347-	88	0.00
90109-T0055-	89	0.00
90110-06040-	99	
-T0002-	99	0.00
90119-07009-	87	
-08B47-	672	52.00
-14106-	113	
-T0443-	87	0.00
-T0444-	113	0.00
-T0529-	113	0.00
90126-08063-	153	12.00
90176-06028-	88	4.00
90201-10344-	86	5.00
90210-06013-	88	2.00
-T0002-	88	0.00
90250-04097-	97	1.00
-08120-	97	0.00
-08120-000	97	
-10030-	97	22.00
-10113-	97	14.00
90253-11005-	88	2.00
-12002-	87	2.00
-13005-	88	2.00
-13017-	98	0.00
-13017-000	98	
90280-04001-	114	2.00
90301-07037-	188	1.00
-14016-	86	
-14016-	101	
-T0055-	98	0.00
-T0057-	98	0.00
-T0057-	99	0.00
90311-73005-	102	
-T0074-	97	53.00
-T0076-	101	10.00
-T0076-	102	10.00
90341-14013-	87	21.00
-16012-000	211	
90344-53008-	101	0.00
90401-10058-	318	18.00
90404-19011-	97	0.00
-T0005-	97	32.00
90430-14009-	87	1.00
-T0023-	99	2.00
90461-12418-	159	27.00
90466-16002-	266	14.00
-62002-	163	42.00

PART NUMBER	PAGE	WEIGHT(g)
90466-T0015-	143	
-T0050-	143	0.00
-T0061-	108	2.00
-T0063-	108	0.00
90467-05063-B5	525	0.00
-05063-C4	525	1.00
-05063-E6	525	0.00
-05063-P5	525	0.00
-05164-P5	434	1.00
-05171-	409	1.00
-07049-C0	404	0.00
-07215-	376	2.00
-11122-	365	2.00
-14001-	107	0.00
-14001-000	107	
-18003-	107	0.00
-18003-000	107	
-21004-	108	
-34004-	147	20.00
90480-T0013-	107	0.00
90501-T0045-	118	0.00
90541-09069-	438	2.00
90901-05026-	160	56.00
90910-02174-	86	
-02175-	97	54.00
-T2012-	86	0.00
90913-03028-	119	1.00
-T2004-	118	1.00
-T2005-	118	1.00
90917-06039-	159	
90919-01275-	172	
-05024-	86	
-T5001-	101	0.00
-T5002-	86	18.00
90981-11013-	557	1.00
-11013-	562	1.00
-11055-	561	2.00
-22004-	556	26.00
91551-80635-	88	
-80816-	199	
-80828-	235	16.00
-80830-	673	16.00
-80850-	672	22.00
-80850-	673	22.00
-80880-	673	31.00
91611-60618-	132	5.00
-60828-000	229	
-70820-	673	
-G0820-	228	
91642-81235-	338	50.00

PART NUMBER	PAGE	WEIGHT(g)
91651-60625-	89	
-B0814-	196	
-B0814-	197	
91652-B1025-	268	24.00
-B1025-	673	24.00
91653-40616-	545	0.00
91671-80825-	327	18.00
91672-81025-	268	30.00
94130-60640-	622	2.00
94512-01000-	267	0.00
-01000-000	267	
95331-04015-	547	18.00
95381-02525-	124	0.00
-02525-000	124	
95411-19995-	168	52.00
96111-30440-	548	26.00
96132-41100-000	144	
96136-41501-	143	
-42701-	143	
-43901-	147	
-52201-	108	7.00
96160-00800-	234	0.00
-00800-000	234	
96221-30705-	319	2.00
-30705-	320	2.00
96721-19009-	99	0.00
-19009-000	99	
-24021-	261	1.00
96723-24016-	98	1.00
-24016-	125	1.00
C6419-BZ010-	560	0.00
-BZ030-	560	0.00
C9909-97201-	654	6.00
G1406-97201-	611	35.00
-B1010-	611	22.00

REVISION REFERENCE CODE TABLE

Revision Ref. Code	Engine No. or Frame No.	Revision Ref. Code	Engine No. or Frame No.

Revision Ref. Code	Engine No. or Frame No.	Revision Ref. Code	Engine No. or Frame No.

EACH MONTH END PRODUCTION FRAME NO. LIST

Model / Month				

Model / Month				

(1111-1901)

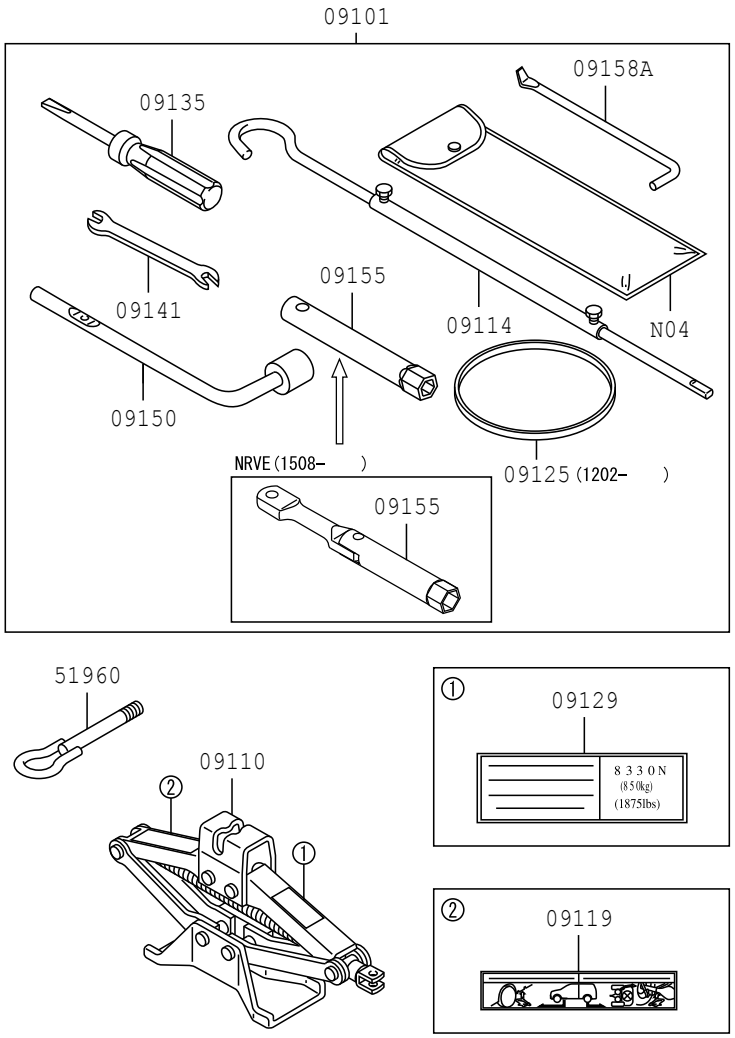

N04 This part is not available for service

(1901-)

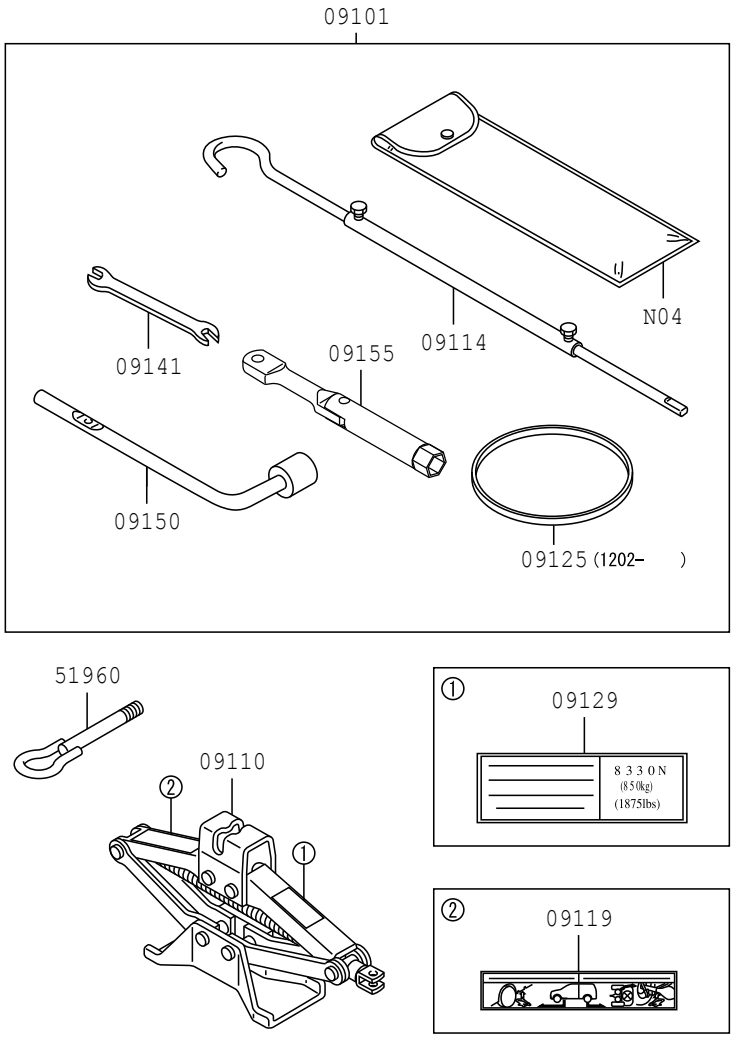

N04 This part is not available for service

PROD_DATE	MODELS	SPEC CODE	DESCRIPTION	R/P	PART NUMBER	QYT	REV_REF FR	REV_REF TO
	+----------+							
	| 09101 | TOOL SET, STANDARD W/O JACK							
	+----------+							
1111 - 1507	F65#				09101-BZ010-	1		
1507 - 1607	F650				09101-BZ010-	1		
1507 - 1901	F653				09101-BZ190-	1		
1901 -	F65#				09101-BZ280-	1		
	+----------+							
	| 09110 | JACK ASSY							
	+----------+							
1111 - 1507	F65#				09111-BZ200-	1		
1507 - 1512	F65#				09111-BZ200-	1		
1601 - 1607	F650				09111-BZ201-	1		
1601 - 1901	F653				09111-BZ201-	1		
1901 -	F65#				09111-BZ201-	1		
	+----------+							
	| 09114 | EXTENSION SUB-ASSY, JACK HANDLE							
	+----------+							
1111 - 1507	F65#				09114-87Z02-	1		
1507 - 1607	F650				09114-87Z02-	1		
1507 - 1901	F653				09114-87Z02-	1		
1901 -	F65#				09114-87Z02-	1		
	+----------+							
	| 09119 | LABEL, JACK CAUTION							
	+----------+							
1111 - 1507	F65#				09119-BZ100-	1		
1507 - 1607	F650				09119-BZ260-	1		
1507 - 1901	F653				09119-BZ260-	1		
1901 -	F65#				09119-BZ260-	1		
	+----------+							
	| 09125 | BAND, TOOL B							
	+----------+ AG							
1202 - 1507	F65#				09125-BZ010-	2		
1507 - 1607	F650				09125-BZ010-	2		
1507 - 1901	F653				09125-BZ010-	2		

FIG.09-01 STANDARD TOOL

PROD_DATE	MODELS	SPEC CODE	DESCRIPTION	R/P	PART NUMBER	QYT	REV_REF FR	REV_REF TO
	+----------+							
	| 09125 | BAND, TOOL B							
	CONTINUED--+ AG							
1901 -	F65#				09125-BZ010-	2		
	+----------+							
	| 09129 | LABEL, JACK CAUTION							
	+----------+							
1111 - 1507	F65#				09119-BZ020-	1		
1507 - 1607	F650				09119-BZ020-	1		
1507 - 1901	F653				09119-BZ020-	1		
1901 -	F65#				09119-BZ020-	1		
	+----------+							
	| 09135 | DRIVER, SCRE							
	+----------+ W							
1111 - 1507	F65#				09135-87Z10-	1		
1507 - 1607	F650				09135-87Z10-	1		
1507 - 1901	F653				09135-87Z10-	1		
	+----------+							
	| 09141 | SPANNER							
	+----------+							
1111 - 1507	F65#		10 X 12		09141-87Z11-	1		
1507 - 1607	F650		10 X 12		09141-87Z11-	1		
1507 - 1901	F653		10 X 12		09141-87Z11-	1		
1901 -	F65#		10 X 12		09141-87Z11-	1		
	+----------+							
	| 09150 | WRENCH, HUB NUT BOX							
	+----------+							
1111 - 1305	F65#				09150-87Z01-	1		
				#	(09150-BZ040-)	1		
1306 - 1507	F65#				09150-BZ040-	1		
1507 - 1607	F650				09150-BZ040-	1		
1507 - 1901	F653				09150-BZ040-	1		
1901 -	F65#				09150-BZ040-	1		
	+----------+							
	| 09155 | WRENCH, SPARK PLUG							
	+----------+							
1111 - 1507	F65#				09155-BZ010-	1		

FIG.09-01 STANDARD TOOL

PROD_DATE	MODELS	SPEC CODE	DESCRIPTION	R/P	PART NUMBER	QYT	REV_REF FR	REV_REF TO
	+----------+							
	| 09155 | WRENCH, SPARK PLUG							
	CONTINUED--+							
1507 - 1607	F650				09155-BZ010-	1		
1507 - 1901	F653				09155-BZ060-	1		
	+----------+							
	| 09158A | HANDLE, SPARK PLUG WRENCH							
	+----------+							
1111 - 1507	F65#				09158-87Z04-	1		
1507 - 1607	F650				09158-87Z04-	1		
1507 - 1901	F653				09158-87Z04-	1		
	+----------+							
	| 51960 | HOOK ASSY, FRONT							
	+----------+							
1111 - 1507	F65#				51960-BZ050-	1		
1507 - 1607	F650				51960-BZ140-	1		
1507 - 1901	F653				51960-BZ140-	1		
1901 -	F65#				51960-BZ140-	1		

(1111-)

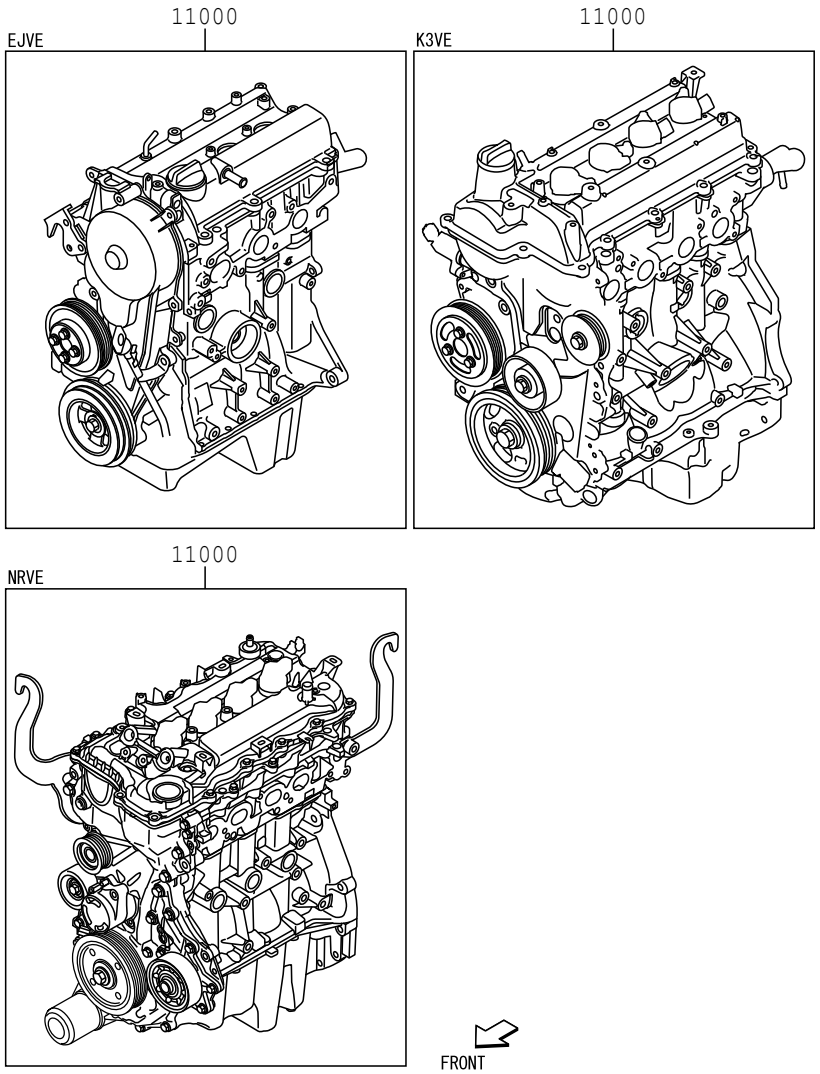

1101

117289-B

FIG.11-01 PARTIAL ENGINE ASSEMBLY

PROD_DATE	MODELS	SPEC CODE	DESCRIPTION	R/P	PART NUMBER	QYT	REV_REF FR	REV_REF TO
	+----------+							
	| 11000 | ENGINE ASSY, PARTIAL							
	+----------+							
1111 - 1312	K3VE..F651				19000-BZV75-	1		
1111 - 1507	EJVE..F650				19000-BZ861-	1		
1312 - 1507	K3VE..F651				19000-BZV76-	1		
1507 - 1605	1NRVE..F653				19000-BZX20-	1		
1507 - 1607	EJVE..F650				19000-BZ811-	1		
1605 - 1901	1NRVE..F653				19000-BZX21-	1		
1901 -	1NRVE..F653				19000-BZX21-	1		
1901 -	2NRVE..F654				19000-BZX31-	1		

FIG.11-02 SHORT BLOCK ASSEMBLY

(1111-1507)K3VE ; (1111-1607)EJVE

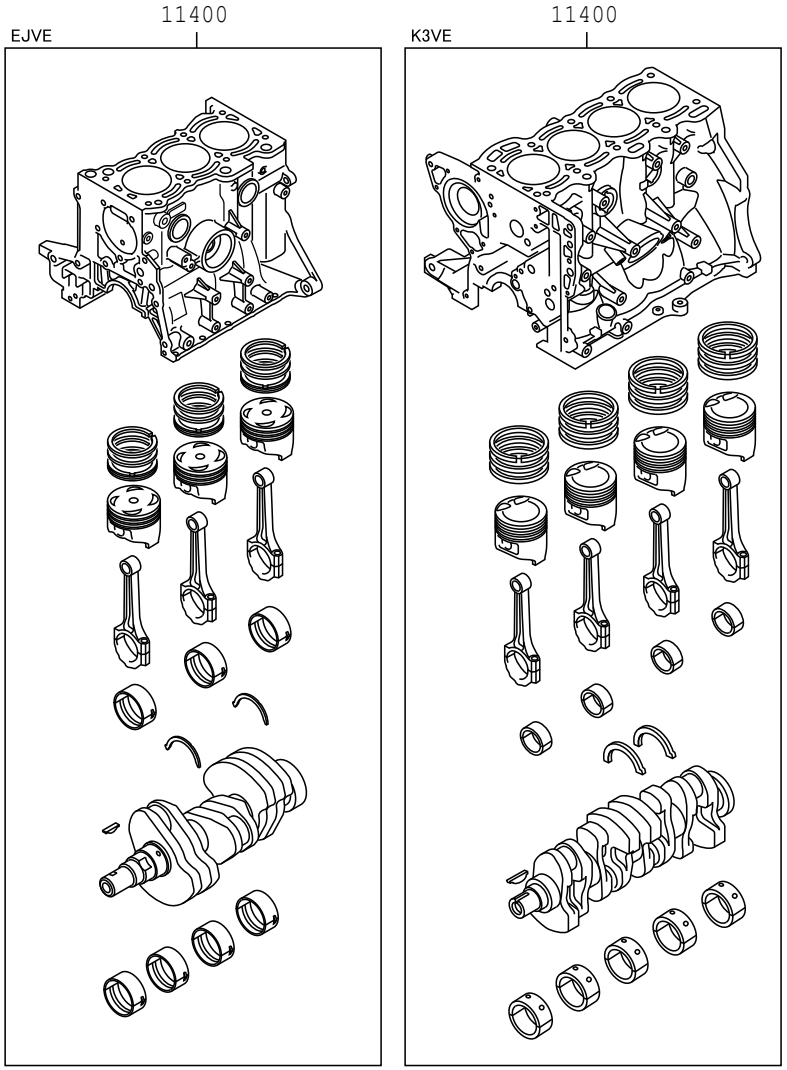

1102 117291

FIG.11-02 SHORT BLOCK ASSEMBLY

(1507-)1NRVE,2NRVE

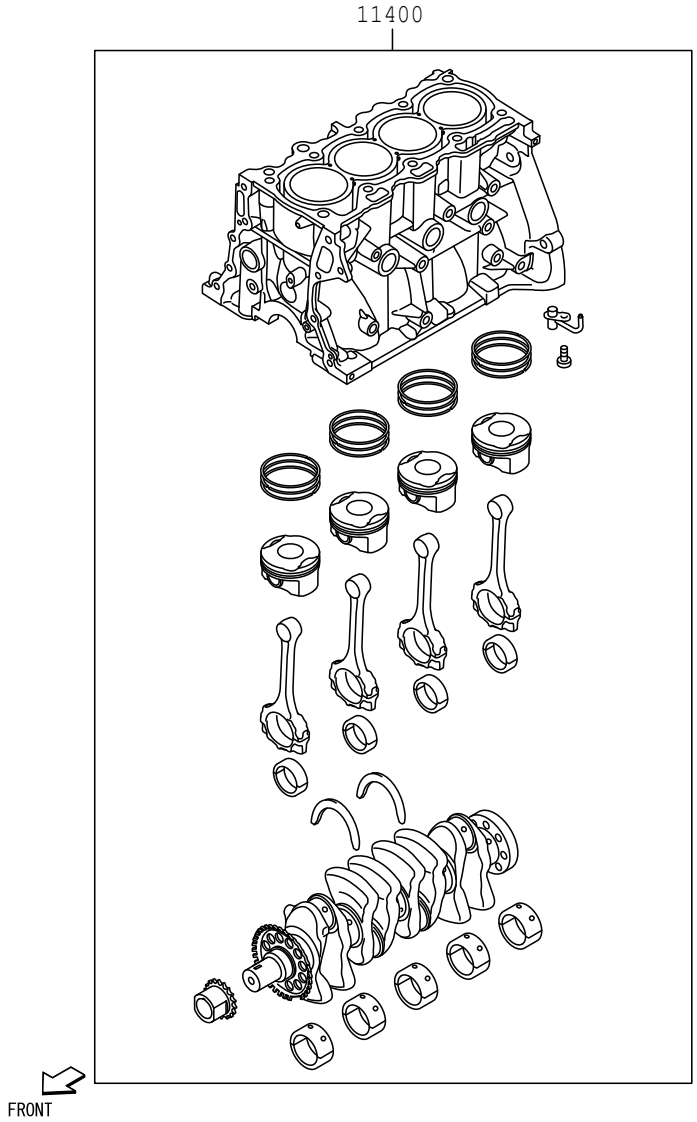

1102 11A659

FIG.11-02 SHORT BLOCK ASSEMBLY

PROD_DATE	MODELS	SPEC CODE	DESCRIPTION	R/P	PART NUMBER	QYT	REV_REF	
							FR	TO
	+----------+ | 11400 | BLOCK ASSY, SHORT +----------+							
1111 - 1312	K3VE..F651				11400-BZD42-	1		
1111 - 1507	EJVE..F650				11400-BZ390-	1		
1312 - 1507	K3VE..F651				11400-BZD43-	1		
1507 - 1607	EJVE..F650				11400-BZ390-	1		
1507 - 1901	1NRVE..F653				11400-BZX20-	1		
1901 -	1NRVE..F653				11400-BZX20-	1		
1901 -	2NRVE..F654				11400-BZX30-	1		

FIG.11-03 ENGINE OVERHAUL GASKET KIT

(1507-)1NRVE,2NRVE

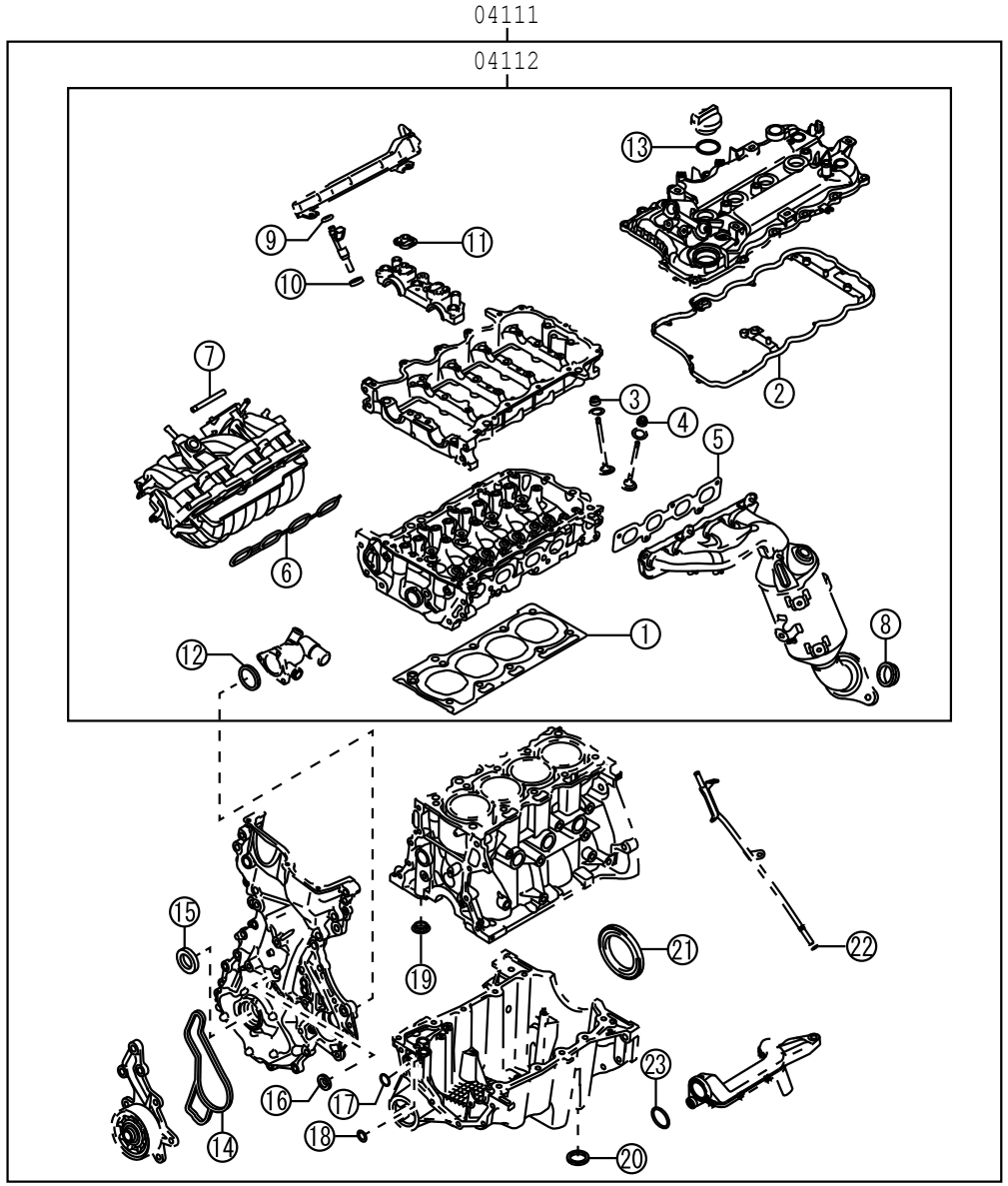

	掲載FIG	個数		掲載FIG	個数
①	REFER TO FIG 11-04 (PNC 11115)	1	⑬	REFER TO FIG 11-04 (PNC 12108A)	1
②	REFER TO FIG 11-04 (PNC 11213)	1	⑭	REFER TO FIG 16-01 (PNC 16271)	1
③	REFER TO FIG 13-02 (PNC 13711E)	8	⑮	REFER TO FIG 11-06 (PNC 11302A)	1
④	REFER TO FIG 13-02 (PNC 13715A)	8	⑯	REFER TO FIG 11-06 (PNC 12108C)	1
⑤	REFER TO FIG 17-01 (PNC 17173)	1	⑰	REFER TO FIG 11-05 (PNC 12101C)	1
⑥	REFER TO FIG 17-01 (PNC 17177)	1	⑱	REFER TO FIG 11-05 (PNC 11444A)	1
⑦	REFER TO FIG 17-01 (PNC 22271A)	1	⑲	REFER TO FIG 11-05 (PNC 15471A)	1
⑧	REFER TO FIG 17-02 (PNC 17451)	1	⑳	REFER TO FIG 11-05 (PNC 12101B)	1
⑨	REFER TO FIG 22-11 (PNC 23250B)	1	㉑	REFER TO FIG 11-05 (PNC 11401L)	1
⑩	REFER TO FIG 22-11 (PNC 23291)	4	㉒	REFER TO FIG 11-05 (PNC 11452B)	1
⑪	REFER TO FIG 11-04 (PNC 11159H)	2	㉓	REFER TO FIG 15-01 (PNC 15104A)	1
⑫	REFER TO FIG 16-03 (PNC 16326)	1			

11E005

FIG.11-03 ENGINE OVERHAUL GASKET KIT

(1111-1607)EJVE

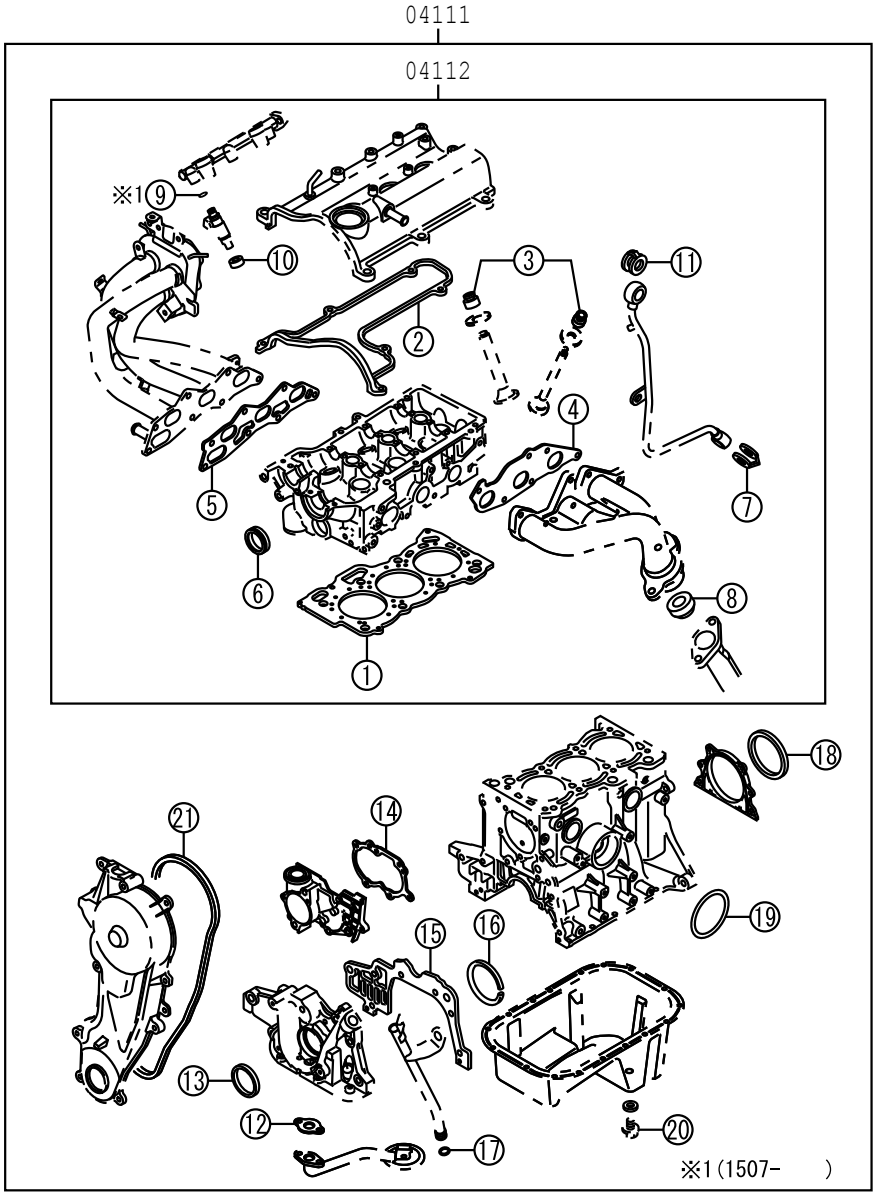

11F3

	掲載FIG	個数		掲載FIG	個数
①	REFER TO FIG 11-04 (PNC 11115)	1	⑫	REFER TO FIG 15-01 (PNC 15149)	1
②	REFER TO FIG 11-04 (PNC 11213)	1	⑬	REFER TO FIG 15-01 (PNC 15101A)	1
③	REFER TO FIG 13-02 (PNC 13711A)	12	⑭	REFER TO FIG 16-01 (PNC 16271)	1
④	REFER TO FIG 17-01 (PNC 17173)	1	⑮	REFER TO FIG 15-01 (PNC 15193)	1
⑤	REFER TO FIG 17-01 (PNC 17177)	1	⑯	REFER TO FIG 15-01 (PNC 15100B)	1
⑥	REFER TO FIG 13-02 (PNC 13512B)	1	⑰	REFER TO FIG 11-05 (PNC 15301A)	1
⑦	REFER TO FIG 15-02 (PNC 15692)	1	⑱	REFER TO FIG 11-06 (PNC 11381A)	1
⑧	REFER TO FIG 17-02 (PNC 17451)	1	⑲	REFER TO FIG 15-02 (PNC 15609H)	1
⑨	REFER TO FIG 22-11 (PNC 23250B)	1	⑳	REFER TO FIG 11-05 (PNC 12101B)	1
⑩	REFER TO FIG 22-11 (PNC 23291)	3	㉑	REFER TO FIG 11-06 (PNC 11322D)	1
⑪	REFER TO FIG 15-02 (PNC 15651A)	1			

11E006

FIG.11-03 ENGINE OVERHAUL GASKET KIT

(1111-1507)K3VE

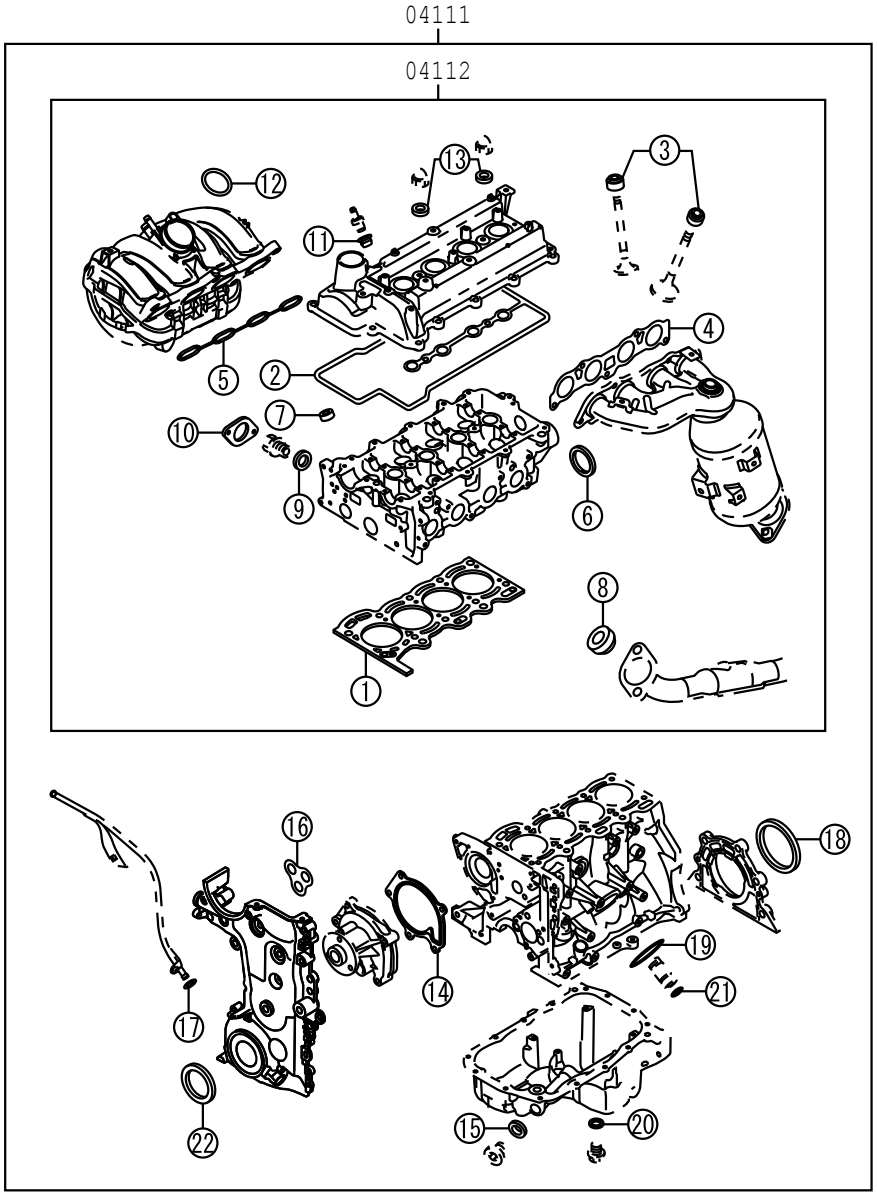

	掲載FIG	個数		掲載FIG	個数
①	REFER TO FIG 11-04 (PNC 11115)	1	⑫	REFER TO FIG 17-01 (PNC 22271A)	1
②	REFER TO FIG 11-04 (PNC 11213)	1	⑬	REFER TO FIG 11-04 (PNC 11201B)	2
③	REFER TO FIG 13-02 (PNC 13711A)	12	⑭	REFER TO FIG 16-01 (PNC 16271)	1
④	REFER TO FIG 17-01 (PNC 17173)	1	⑮	REFER TO FIG 11-05 (PNC 12101F)	1
⑤	REFER TO FIG 17-01 (PNC 17177)	1	⑯	REFER TO FIG 11-06 (PNC 11328)	1
⑥	REFER TO FIG 16-03 (PNC 16341)	1	⑰	REFER TO FIG 11-05 (PNC 15301A)	1
⑦	REFER TO FIG 22-11 (PNC 23291)	3	⑱	REFER TO FIG 11-06 (PNC 11381A)	1
⑧	REFER TO FIG 17-02 (PNC 17451)	1	⑲	REFER TO FIG 15-02 (PNC 15609H)	1
⑨	REFER TO FIG 11-04 (PNC 11117J)	1	⑳	REFER TO FIG 11-05 (PNC 12101B)	1
⑩	REFER TO FIG 16-03 (PNC 16355A)	1	㉑	REFER TO FIG 11-05 (PNC 11444A)	1
⑪	REFER TO FIG 12-01 (PNC 12204A)	1	㉒	REFER TO FIG 11-06 (PNC 11302A)	1

11E007

FIG.11-03 ENGINE OVERHAUL GASKET KIT

PROD_DATE	MODELS	SPEC CODE	DESCRIPTION	R/P	PART NUMBER	QYT	REV_REF FR	REV_REF TO
	+----------+							
	| 04111 | GASKET KIT, ENGINE OVERHAUL							
	+----------+							
1111 - 1112	K3VE..F651				04111-BZ101-	1		
1111 - 1311	EJVE..F650				04111-BZ751-	1		
1112 - 1311	K3VE..F651				04111-BZ102-	1		
				#	(04111-BZ107-)	1		
1311 - 1408	K3VE..F651				04111-BZ103-	1		
				#	(04111-BZ107-)	1		
1311 - 1408	EJVE..F650				04111-BZ752-	1		
1408 - 1507	K3VE..F651				04111-BZ107-	1		
1408 - 1507	EJVE..F650				04111-BZ754-	1		
1507 - 1508	1NRVE..F653				04111-BZ125-	1		
1508 - 1510	1NRVE..F653				04111-BZ126-	1		
1507 - 1607	EJVE..F650				04111-BZ755-	1		
1510 - 1901	1NRVE..F653				04111-BZ127-	1		
1901 -	1NRVE,2NRVE..F65#				04111-BZ127-	1		
	+----------+							
	| 04112 | GASKET KIT, ENGINE VALVE GRIND							
	+----------+							
1111 - 1112	K3VE..F651				04112-BZ101-	1		
1111 - 1507	EJVE..F650				04112-BZ471-	1		
1112 - 1507	K3VE..F651				04112-BZ102-	1		
1507 - 1508	1NRVE..F653				04112-BZ125-	1		
1508 - 1510	1NRVE..F653				04112-BZ126-	1		
1507 - 1607	EJVE..F650				04112-BZ472-	1		
1510 - 1901	1NRVE..F653				04112-BZ127-	1		
1901 -	1NRVE,2NRVE..F65#				04112-BZ127-	1		

FIG. 11-04 CYLINDER HEAD

(1111-)EJVE

ILLUST NO. 1 OF 2 ILLUST NO. 1 OF 2

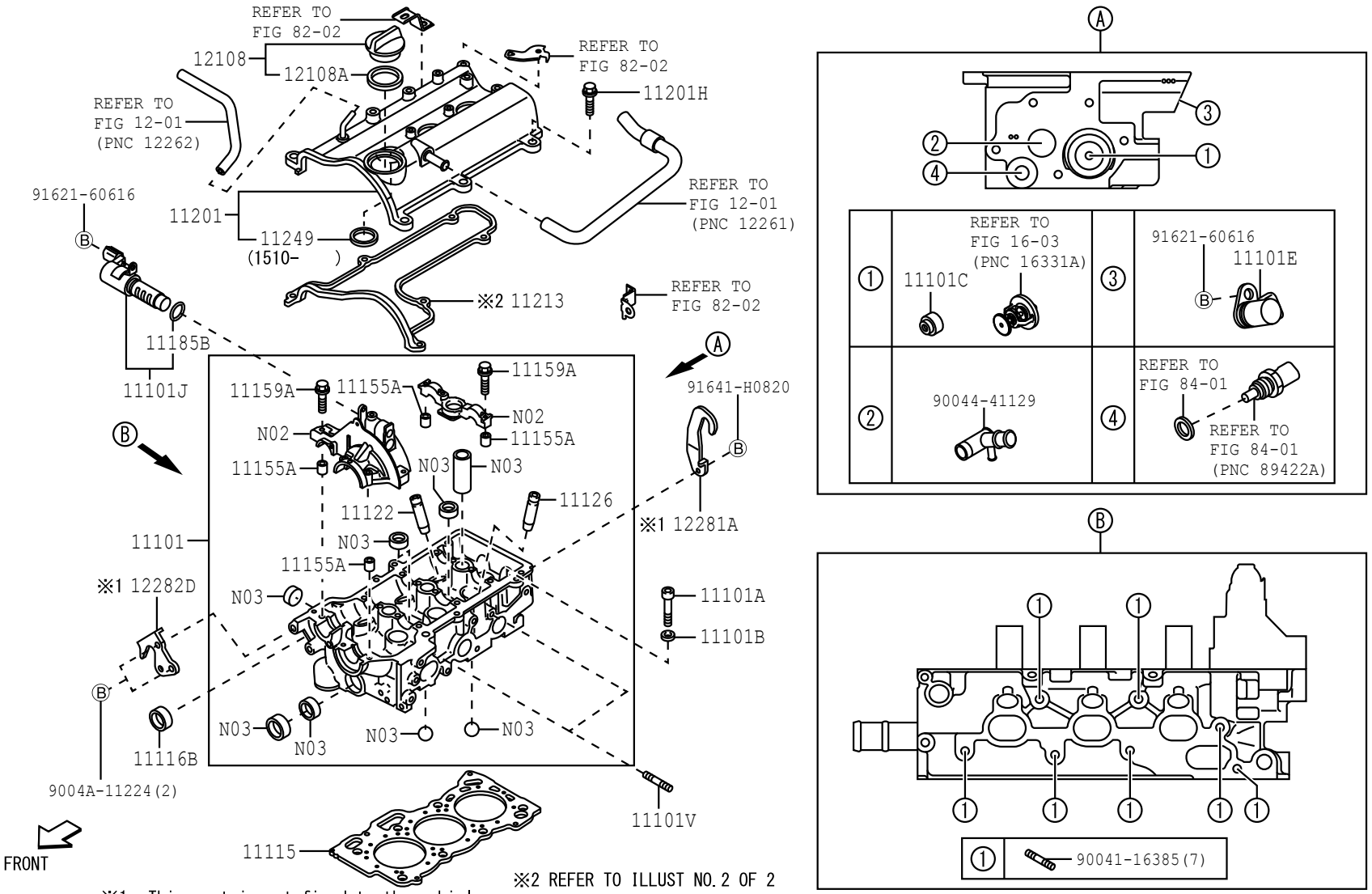

※1 This part is not fixed to the vehicle.
N02 This part is not supplied as an individual part, because it is necessary to maintenance specially after the part assembled / disassembled.
N03 This part is not supplied as an individual part, because it is difficult to keep the function / quality of parts assembled / disassembled.

11F4 117236-F

FIG.11-04 CYLINDER HEAD

(1111-1507)K3VE

ILLUST NO.1 OF 2 ILLUST NO. 1 OF 2

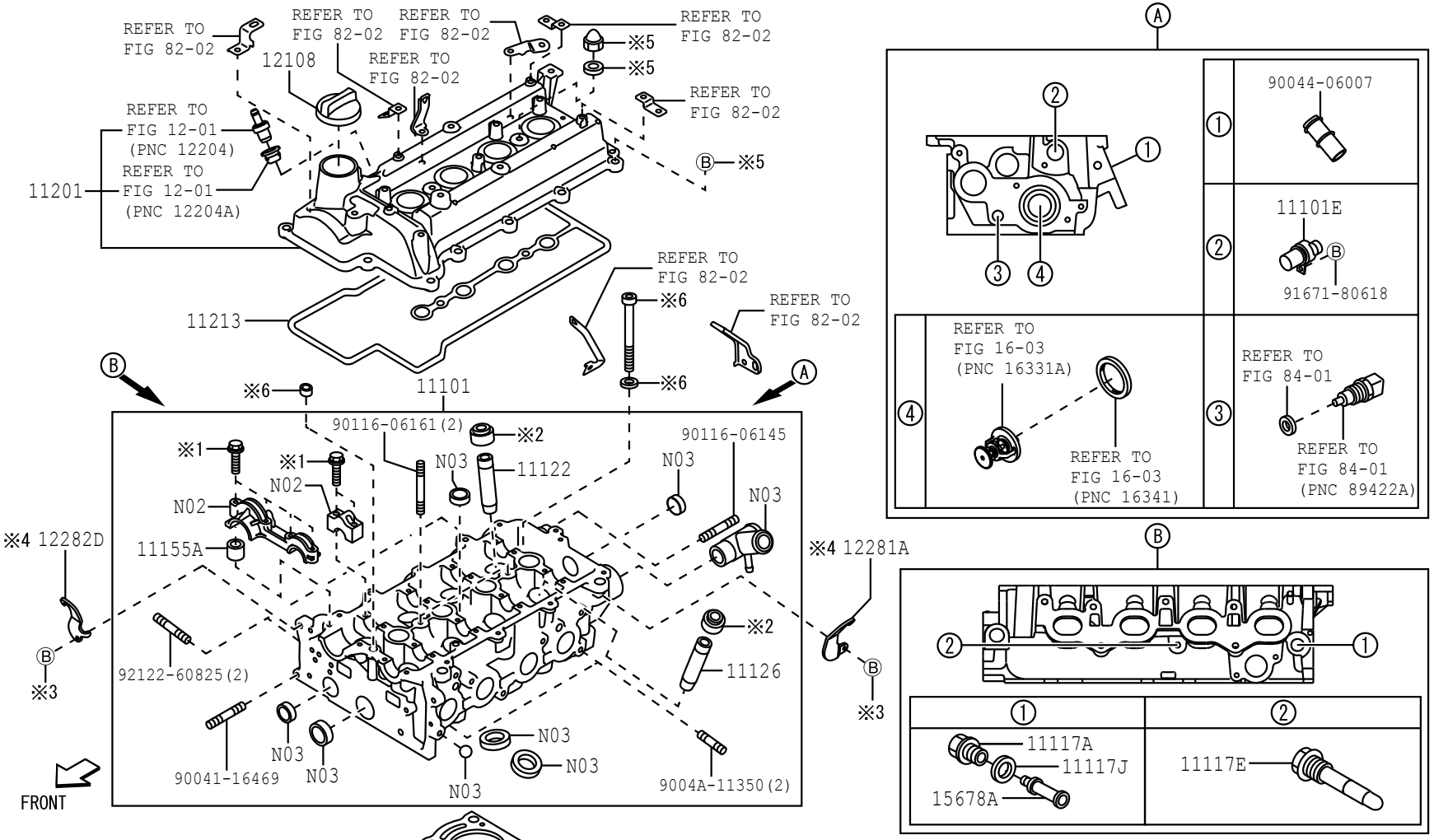

※1 11159A
※2 REFER TO FIG 13-02 (PNC 13711A)
※3 91671-80820

11F4

※4 This part is not fixed to the vehicle.
※5,※6 REFER TO ILLUST NO.2 OF 2

N02 This part is not supplied as an individual part, because it is necessary to maintenance specially after the part assembled / disassembled.
N03 This part is not supplied as an individual part, because it is difficult to keep the function / quality of parts assembled / disassembled. 117239-D

(1111-1507)K3VE

ILLUST NO.2 OF 2 ILLUST NO. 2 OF 2

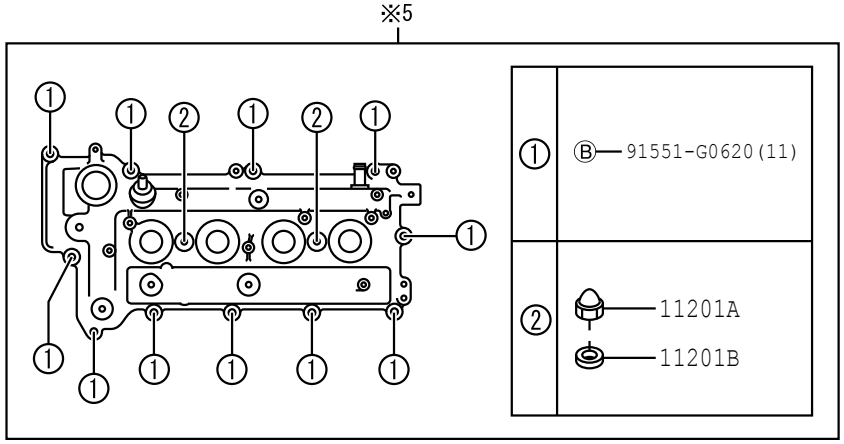

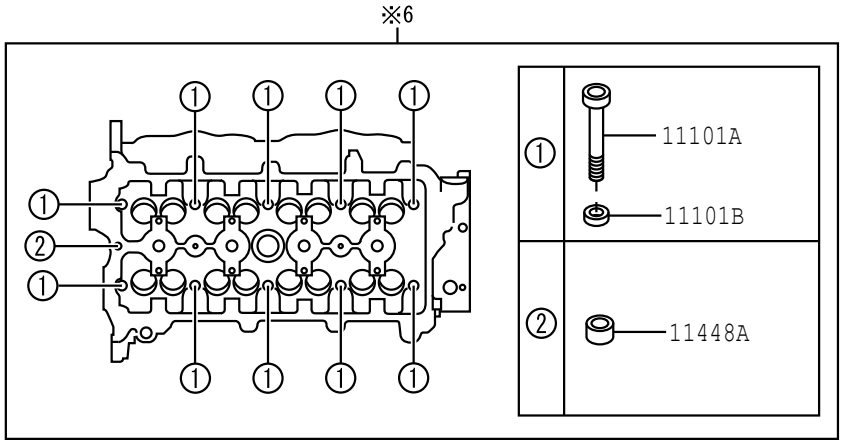

(1111-)EJVE

ILLUST NO.2 OF 2 ILLUST NO. 2 OF 2

※2 PNC 11213

TYPE A	TYPE B
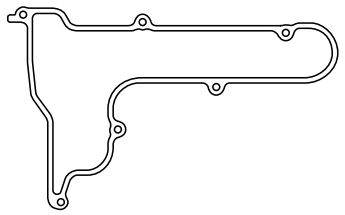	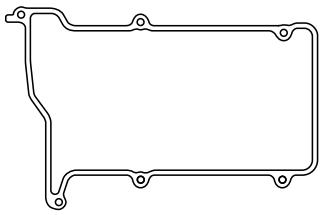

(1507-)1NRVE,2NRVE

ILLUST NO.1 OF 2 ILLUST NO. 1 OF 1

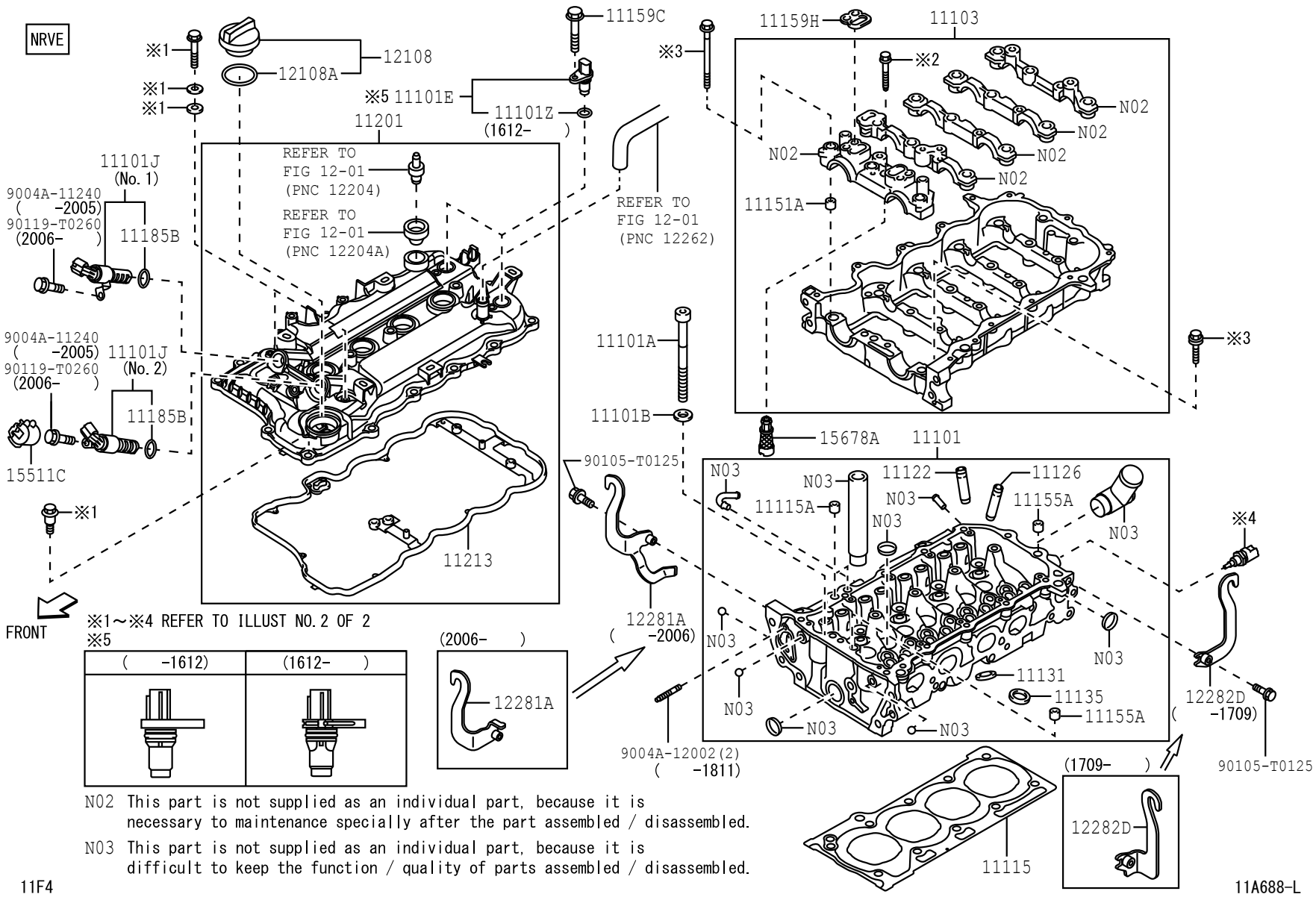

N02 This part is not supplied as an individual part, because it is necessary to maintenance specially after the part assembled / disassembled.

N03 This part is not supplied as an individual part, because it is difficult to keep the function / quality of parts assembled / disassembled.

11F4

11A688-L

※1

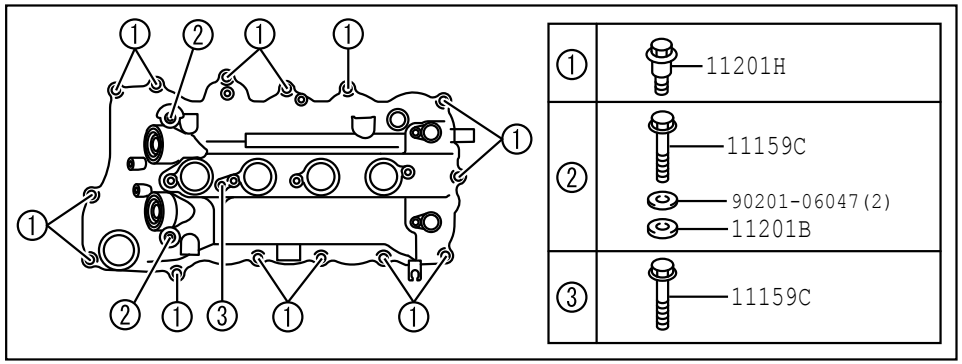

※2

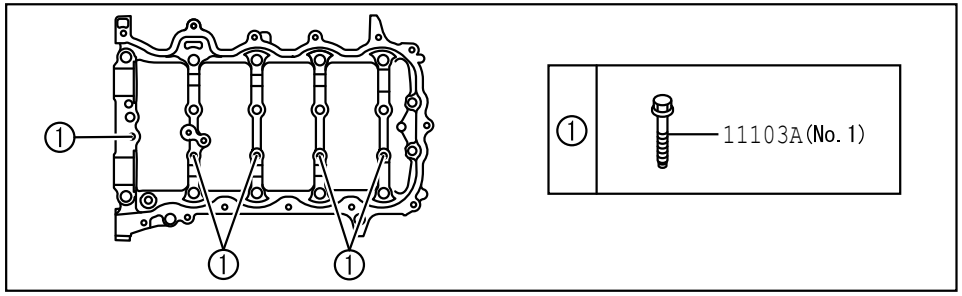

※3

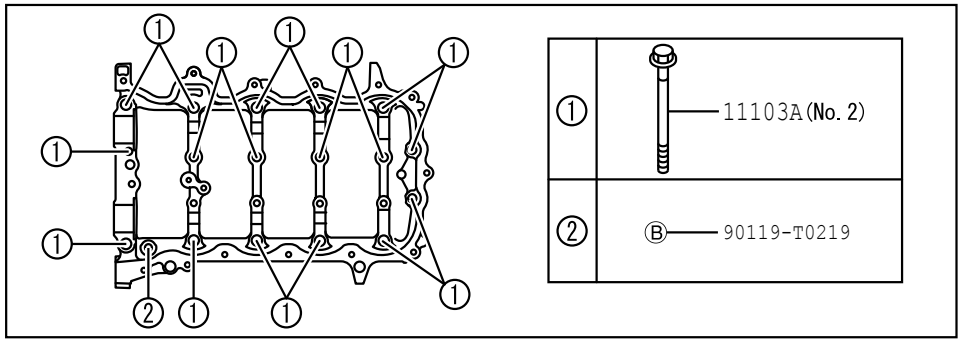

※4

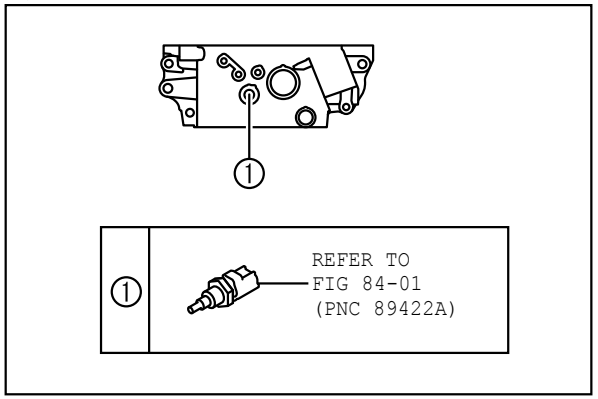

11F4

11A689-A

PROD_DATE	MODELS	SPEC CODE	DESCRIPTION	R/P	PART NUMBER	QYT	REV_REF FR	REV_REF TO
	+----------+							
	| 11101 | HEAD SUB-ASSY, CYLINDER							
	+----------+							
1111 - 1507	K3VE..F651				11101-B9320-	1		
1111 - 1507	EJVE..F650				11101-BZ040-	1		
1507 - 1605	1NRVE..F653				11101-B9620-	1		
1507 - 1607	EJVE..F650				11101-BZ040-	1		
1605 - 1901	1NRVE..F653				11101-B9622-	1		
1901 -	1NRVE,2NRVE..F65#				11101-B9622-	1		
	+----------+							
	| 11101A | BOLT(FOR CYLINDER HEAD SET)							
	+----------+							
1111 - 1507	EJVE..F650				90041-10041-	8		
1111 - 1507	K3VE..F651				90041-10045-	10		
1507 - 1607	EJVE..F650				90041-10041-	8		
1507 - 1901	1NRVE..F653				90910-T2012-	10		
				#	(90910-02174-)	1		
1901 -	1NRVE,2NRVE..F65#				90910-T2012-	10		
				#	(90910-02174-)	1		
	+----------+							
	| 11101B | WASHER, PLATE(FOR CYLINDER HEAD SET)							
	+----------+							
1111 - 1507	K3VE..F651				90042-01637-	10		
1111 - 1507	EJVE..F650				90042-02109-	8		
1507 - 1607	EJVE..F650				90042-02109-	8		
1507 - 1901	1NRVE..F653				90201-10344-	10		
1901 -	1NRVE,2NRVE..F65#				90201-10344-	10		
	+----------+							
	| 11101C | TUBE(FOR CYLINDER HEAD)							
	+----------+							
1111 - 1507	EJVE..F650				90044-40046-	1		
1507 - 1607	EJVE..F650				90044-40046-	1		
	+----------+							
	| 11101E | SENSOR, CAM POSITION							
	+----------+							
1111 - 1507	EJVE..F650				19300-BZ010-	1		

FIG.11-04 CYLINDER HEAD

PROD_DATE	MODELS	SPEC CODE	DESCRIPTION	R/P	PART NUMBER	QYT	REV_REF FR	REV_REF TO
	+----------+							
	| 11101E | SENSOR, CAM POSITION							
	CONTINUED--+							
1111 - 1507	K3VE..F651				19300-BZ020-	1		
				#	(90919-05024-)	1		
1507 - 1607	EJVE..F650				19300-BZ010-	1		
1507 - 1612	1NRVE..F653				9004A-19003-	2		
1612 - 1901	1NRVE..F653				90919-T5002-	2		
1901 -	1NRVE,2NRVE..F65#				90919-T5002-	2		
	+----------+							
	| 11101J | VALVE ASSY, CAMSHAFT TIMING OIL CONTROL							
	+----------+							
1111 - 1507	EJVE..F650				15330-BZ060-	1		
1507 - 1607	EJVE..F650				15330-BZ060-	1		
1507 - 1901	1NRVE..F653		NO.1		15330-0Y050-	1		
1507 - 1901	1NRVE..F653		NO.2		15330-0Y060-	1		
1901 -	1NRVE,2NRVE..F65#		NO.1		15330-0Y050-	1		
1901 -	1NRVE,2NRVE..F65#		NO.2		15330-0Y060-	1		
	+----------+							
	| 11101V | BOLT(FOR CYLINDER HEAD SET SUB)							
	+----------+							
1111 - 1507	EJVE..F650				90041-16420-	2		
1507 - 1607	EJVE..F650				90041-16420-	2		
	+----------+							
	| 11101Z | O RING, CAM POSITION SENSOR							
	+----------+							
1612 - 1901	1NRVE..F653				9004A-30059-	1		
				#	(90301-14016-)	1		
1901 -	1NRVE,2NRVE..F65#				9004A-30059-	2		
				#	(90301-14016-)	1		
	+----------+							
	| 11103 | HOUSING SUB-ASSY, CAMSHAFT							
	+----------+							
1507 - 1901	1NRVE..F653				11103-0Y040-	1		
1901 -	1NRVE,2NRVE..F65#				11103-0Y040-	1		

PROD_DATE	MODELS	SPEC CODE	DESCRIPTION	R/P	PART NUMBER	QYT	REV_REF FR	REV_REF TO
	+----------+							
	| 11103A | BOLT(FOR CAMSHAFT HOUSING SET)							
	+----------+							
1507 - 1901	1NRVE..F653		NO.2		90105-T0271-	17		
				#	(90105-08455-)	1		
1507 - 1901	1NRVE..F653		NO.1		90119-T0443-	5		
				#	(90119-07009-)	1		
1901 -	1NRVE,2NRVE..F65#		NO.2		90105-T0271-	17		
				#	(90105-08455-)	1		
1901 -	1NRVE,2NRVE..F65#		NO.1		90119-T0443-	5		
				#	(90119-07009-)	1		
	+----------+							
	| 11115 | GASKET, CYLINDER HEAD							
	+----------+							
1111 - 1507	EJVE..F650				11115-B0010-	1		
1111 - 1507	K3VE..F651		T=0.41		11115-B1030-	1		
1507 - 1607	EJVE..F650				11115-B0010-	1		
1507 - 1901	1NRVE..F653				11115-0Y030-	1		
1901 -	1NRVE,2NRVE..F65#				11115-0Y030-	1		
	+----------+							
	| 11115A | PIN, RING							
	+----------+							
1507 - 1901	1NRVE..F653		L=12,OD=12		90253-12002-	2		
1901 - 1912	1NRVE,2NRVE..F65#		L=12,OD=12		90253-12002-	2		
2001 -	1NRVE,2NRVE..F65#				9004A-25038-	2		
				#	(90042-53013-)	1		
	+----------+							
	| 11116B | PLUG, TIGHT, NO.2							
	+----------+							
1111 - 1507	EJVE..F650				90043-39096-	1		
1507 - 1607	EJVE..F650				90043-39096-	1		
	+----------+							
	| 11117A | PLUG, W/HEAD TAPER SCREW, NO.1							
	+----------+							
1111 - 1507	K3VE..F651				90341-14013-	1		
	+----------+							
	| 11117E | PLUG, W/HEAD STRAIGHT SCREW, NO.1							
	+----------+							
1111 - 1507	K3VE..F651				90043-39124-	1		

FIG.11-04 CYLINDER HEAD

PROD_DATE	MODELS	SPEC CODE	DESCRIPTION	R/P	PART NUMBER	QYT	REV_REF FR	REV_REF TO
	+----------+							
	| 11117J | GASKET(FOR CYLINDER HEAD SCREW PLUG)							
	+----------+							
1111 - 1507	K3VE..F651				90430-14009-	1		
	+----------+							
	| 11122 | BUSH, INTAKE VALVE GUIDE							
	+----------+							
1111 - 1507	K3VE..F651		STD		11122-BZ010-	8		
1111 - 1507	K3VE..F651		O/S 0.05		11123-BZ010-	8		
1111 - 1507	EJVE..F650				11124-87203-	6		
1507 - 1607	EJVE..F650				11124-87203-	6		
1507 - 1709	1NRVE..F653		STD		11122-31041-	8		
1507 - 1709	1NRVE..F653		O/S 0.05		11123-31041-	8		
1709 - 1901	1NRVE..F653		STD		11122-47020-	8		
1709 - 1901	1NRVE..F653		O/S 0.05		11123-47020-	8		
1901 -	1NRVE,2NRVE..F65#		STD		11122-47020-	8		
1901 -	1NRVE,2NRVE..F65#		O/S 0.05		11123-47020-	8		
	+----------+							
	| 11126 | BUSH, EXHAUST VALVE GUIDE							
	+----------+							
1111 - 1507	K3VE..F651		STD		11122-BZ010-	8		
1111 - 1507	K3VE..F651		O/S 0.05		11123-BZ010-	8		
1111 - 1507	EJVE..F650				11124-87203-	6		
1507 - 1607	EJVE..F650				11124-87203-	6		
1507 - 1709	1NRVE..F653		STD		11122-31041-	8		
1507 - 1709	1NRVE..F653		O/S 0.05		11123-31041-	8		
1709 - 1901	1NRVE..F653		STD		11122-47020-	8		
1709 - 1901	1NRVE..F653		O/S 0.05		11123-47020-	8		
1901 -	1NRVE,2NRVE..F65#		STD		11122-47020-	8		
1901 -	1NRVE,2NRVE..F65#		O/S 0.05		11123-47020-	8		

PROD_DATE	MODELS	SPEC CODE	DESCRIPTION	R/P	PART NUMBER	QYT	REV_REF FR	REV_REF TO
	+----------+							
	| 11131 | SEAT, INTAKE VALVE							
	+----------+							
1507 - 1605	1NRVE..F653		STD		11131-47010-	8		
1507 - 1901	1NRVE..F653		O/S 0.03		11132-47010-	8		
1901 -	1NRVE,2NRVE..F65#		O/S 0.03		11132-47010-	8		
	+----------+							
	| 11135 | SEAT, EXHAUST VALVE							
	+----------+							
1507 - 1605	1NRVE..F653		STD		11135-47010-	8		
1507 - 1901	1NRVE..F653		O/S 0.03		11136-47010-	8		
1901 -	1NRVE,2NRVE..F65#		O/S 0.03		11136-47010-	8		
	+----------+							
	| 11151A | PIN, RING(FOR CAMSHAFT BEARING CAP SETTIN							
	+----------+ G)							
1507 - 1901	1NRVE..F653		L=12.5,OD=8		90253-13005-	10		
1901 -	1NRVE,2NRVE..F65#		L=12.5,OD=8		90253-13005-	10		
	+----------+							
	| 11155A | PIN, RING W/HEAD							
	+----------+							
1111 - 1507	K3VE..F651		L=5.5,OD=8		90042-53010-	2		
1111 - 1507	EJVE..F650		L=5.5,OD=8		90042-53010-	8		
1507 - 1607	EJVE..F650		L=5.5,OD=8		90042-53010-	8		
1507 - 1901	1NRVE..F653		L=11,OD=9		90253-11005-	2		
1901 -	1NRVE,2NRVE..F65#		L=11,OD=9		90253-11005-	2		
	+----------+							
	| 11159A | BOLT(FOR HEAD TO CAMSHAFT BEARING CAP)							
	+----------+							
1111 - 1507	EJVE..F650				90041-20113-	17		
1111 - 1507	K3VE..F651				9004A-11304-	20		
				#	(90041-19911-)	1		
1507 - 1607	EJVE..F650				90041-20113-	17		
	+----------+							
	| 11159C | BOLT(FOR HEAD TO CAMSHAFT BEARING CAP)							
	+----------+							
1507 - 1605	1NRVE..F653				90105-T0283-	3		
				#	(91551-80635-)	1		

FIG.11-04 CYLINDER HEAD

PROD_DATE	MODELS	SPEC CODE	DESCRIPTION	R/P	PART NUMBER	QYT	REV_REF FR	REV_REF TO
	+----------+							
	| 11159C | BOLT(FOR HEAD TO CAMSHAFT BEARING CAP)							
	CONTINUED--+							
1606 - 1901	1NRVE..F653				90105-T0347-	3		
1901 -	1NRVE,2NRVE..F65#				90105-T0347-	3		
	+----------+							
	| 11159H | GASKET, CAMSHAFT BEARING CAP OIL HOLE							
	+----------+							
1507 - 1901	1NRVE..F653				11159-0Y020-	2		
1901 -	1NRVE,2NRVE..F65#				11159-0Y020-	2		
	+----------+							
	| 11185B | RING, O							
	+----------+							
1111 - 1507	EJVE..F650				90043-01262-	1		
1507 - 1607	EJVE..F650				90043-01262-	1		
1507 - 1901	1NRVE..F653				90068-14041-	2		
1901 -	1NRVE,2NRVE..F65#				90068-14041-	2		
	+----------+							
	| 11201 | COVER SUB-ASSY, CYLINDER HEAD							
	+----------+							
1111 - 1507	EJVE..F650				11201-BZ030-	1		
1111 - 1507	K3VE..F651				11201-BZ040-	1		
1507 - 1509	EJVE..F650				11201-BZ030-	1		
1510 - 1607	EJVE..F650				11201-BZ031-	1		
1507 - 1901	1NRVE..F653				11201-BZ100-	1		
1901 -	1NRVE,2NRVE..F65#				11201-BZ100-	1		
	+----------+							
	| 11201A | NUT, CAP(FOR CYLINDER HEAD COVER)							
	+----------+							
1111 - 1507	K3VE..F651				90176-06028-	2		
	+----------+							
	| 11201B | WASHER, SEAL(FOR CYLINDER HEAD COVER)							
	+----------+							
1111 - 1507	K3VE..F651				90210-06013-	2		
1507 - 1901	1NRVE..F653				90210-T0002-	2		
1901 -	1NRVE,2NRVE..F65#				90210-T0002-	2		

PROD_DATE	MODELS	SPEC CODE	DESCRIPTION	R/P	PART NUMBER	QYT	REV_REF FR	REV_REF TO
	+----------+							
	| 11201H | BOLT(FOR CYLINDER HEAD COVER)							
	+----------+							
1111 - 1507	EJVE..F650				91651-60625-	6		
1507 - 1607	EJVE..F650				91651-60625-	6		
1507 - 1901	1NRVE..F653				90109-T0055-	14		
1901 -	1NRVE,2NRVE..F65#				90109-T0055-	14		
	+----------+							
	| 11213 | GASKET, CYLINDER HEAD COVER							
	+----------+							
1111 - 1112	K3VE..F651				11213-BZ010-	1		
				#	(11213-97401-)	1		
1111 - 1507	EJVE..F650		TYPE A		11213-BZ020-	1		
1112 - 1507	K3VE..F651		JAPAN SOURCED PARTS		11213-97401-	1		
1112 - 1507	K3VE..F651		LOCAL SOURCED PARTS		11213-BZ010-	1		
				#	(11213-97401-)	1		
1201 - 1507	EJVE..F650		TYPE B		11213-97202-	1		
1507 - 1607	EJVE..F650		TYPE B		11213-97202-	1		
1507 - 1607	EJVE..F650		TYPE A		11213-BZ020-	1		
1507 - 1901	1NRVE..F653				11213-0Y030-	1		
1901 -	1NRVE,2NRVE..F65#				11213-0Y030-	1		
	+----------+							
	| 11249 | GROMMET, CYLINDER HEAD COVER							
	+----------+							
1510 - 1607	EJVE..F650				9004A-48039-	3		
	+----------+							
	| 11448A | ORIFICE, CYLINDER HEAD OIL							
	+----------+							
1111 - 1507	K3VE..F651				11448-BZ010-	1		
				#	(11448-87201-)	1		
	+----------+							
	| 12108 | CAP SUB-ASSY, OIL FILLER							
	+----------+							
1111 - 1507	EJVE..F650				12180-87Z01-	1		
1111 - 1507	K3VE..F651				12180-BZ010-	1		
				#	(12180-97401-)	1		
1507 - 1607	EJVE..F650				12180-87Z01-	1		

FIG.11-04 CYLINDER HEAD

PROD_DATE	MODELS	SPEC CODE	DESCRIPTION	R/P	PART NUMBER	QYT	REV_REF FR	REV_REF TO
	+----------+							
	| 12108 | CAP SUB-ASSY, OIL FILLER							
	CONTINUED--+							
1507 - 1901	1NRVE..F653				12180-0H020-	1		
1901 -	1NRVE,2NRVE..F65#				12180-0H020-	1		
	+----------+							
	| 12108A | GASKET(FOR OIL FILLER CAP)							
	+----------+							
1111 - 1507	EJVE..F650				12195-87Z01-	1		
1507 - 1607	EJVE..F650				12195-87Z01-	1		
1507 - 1901	1NRVE..F653				90080-43027-	1		
1901 -	1NRVE,2NRVE..F65#				90080-43027-	1		
	+----------+							
	| 12281A | HANGER, ENGINE, NO.1							
	+----------+							
1111 - 1507	K3VE..F651		BLACK		12281-97401-	33		
1111 - 1507	K3VE..F651		SILVER		12281-97402-	33		
1111 - 1507	EJVE..F650				12281-BZ010-	33		
1507 - 1607	EJVE..F650				12281-BZ010-	33		
1507 - 1901	1NRVE..F653				12281-0Y070-	33		
1901 - 2006	1NRVE,2NRVE..F65#				12281-0Y070-	33		
2006 -	1NRVE,2NRVE..F65#				12281-BZ080-	33		
	+----------+							
	| 12282D | HANGER, ENGINE, NO.2							
	+----------+							
1111 - 1205	EJVE..F650		JAPAN SOURCED PARTS		12282-87215-	33		
1111 - 1507	K3VE..F651		BLACK		12282-97403-	33		
1111 - 1507	K3VE..F651		SILVER		12282-97404-	33		
1205 - 1507	EJVE..F650		LOCAL SOURCED PARTS		12282-BZ110-	33		
1507 - 1607	EJVE..F650		LOCAL SOURCED PARTS		12282-BZ110-	33		
1507 - 1612	1NRVE..F653		SILVER		12282-BZ150-	33		
1507 - 1709	1NRVE..F653		BLACK		12282-BZ140-	33		
1709 - 1901	1NRVE..F653		BLACK		12282-BZ141-	33		

FIG.11-04 CYLINDER HEAD

PROD_DATE	MODELS	SPEC CODE	DESCRIPTION	R/P	PART NUMBER	QYT	REV_REF FR	REV_REF TO
	+----------+							
	| 12282D | HANGER, ENGINE, NO.2							
	CONTINUED--+							
1901 -	1NRVE,2NRVE..F65#		BLACK		12282-BZ141-	33		
	+----------+							
	| 15511C | COVER, OIL CONTROL VALVE							
	+----------+							
1507 - 1901	1NRVE..F653				15511-BZ010-	1		
1901 -	1NRVE,2NRVE..F65#				15511-BZ010-	1		
	+----------+							
	| 15678A | FILTER, OIL CONTROL VALVE							
	+----------+							
1111 - 1507	K3VE..F651				15678-21010-	1		
1507 - 1901	1NRVE..F653				15678-0Y010-	1		
1901 -	1NRVE,2NRVE..F65#				15678-0Y010-	1		

FIG. 11-05 CYLINDER BLOCK

(1111-)EJVE

ILLUST NO. 1 OF 2 ILLUST NO. 1 OF 2

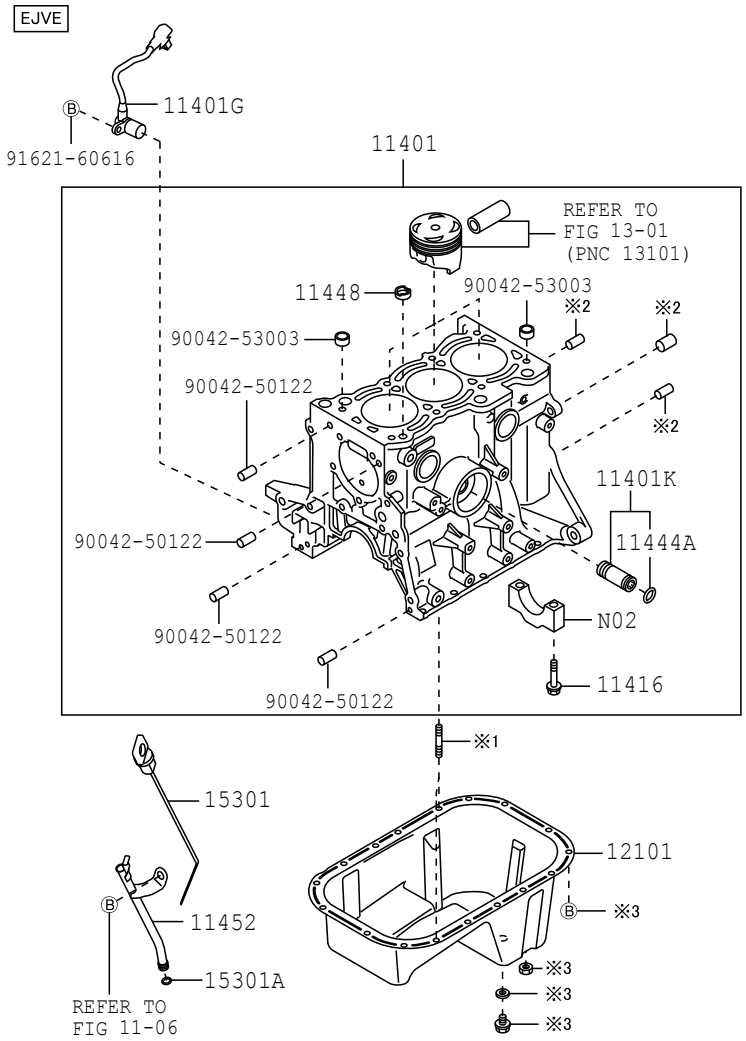

※1～※3 REFER TO ILLUST NO. 2 OF 2

N02 This part is not supplied as an individual part, because it is necessary to maintenance specially after the part assembled / disassembled

11F5 117246-A

EJVE

※1 UNDER VIEW

Parts not included as component part of PNC 11401

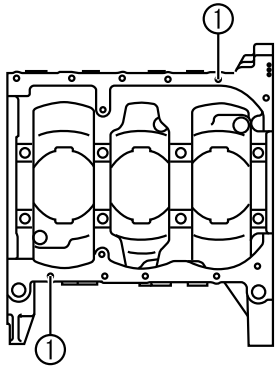

1	90041-16366(2)

※2 REAR VIEW

Parts included as component part of PNC 11401

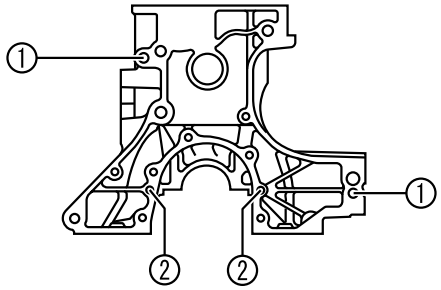

1	90042-50514(2)
2	90042-50122(2)

※3 UNDER VIEW OF OIL PAN

Parts not included as component part of PNC 12101

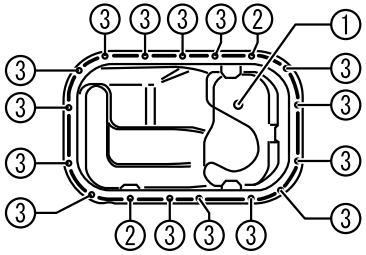

1	12101A 12101B
2	Ⓝ— 90041-79104(2)(-1602) 9004A-17177(2)(1603-)
3	Ⓑ— 91612-60612(15)

FIG. 11-05 CYLINDER BLOCK

(1111-1507)K3VE

ILLUST NO. 1 OF 2

ILLUST NO. 1 OF 2

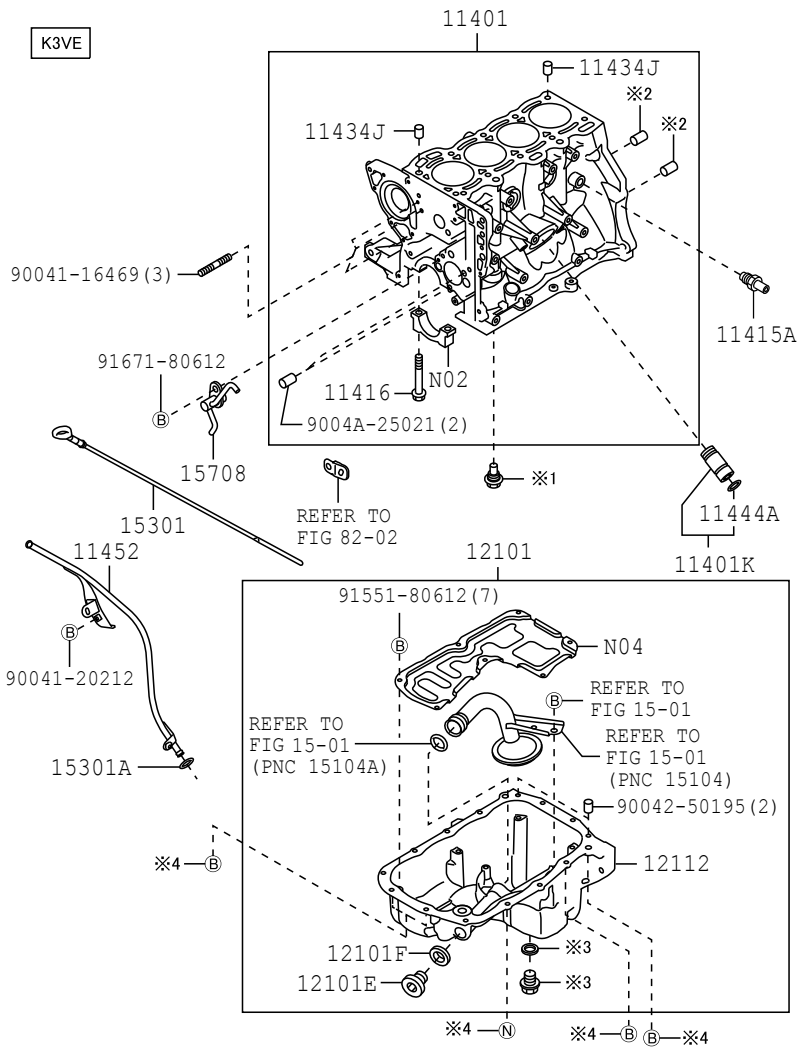

N02 This part is not supplied as an individual part, because it is necessary to maintenance specially after the part assembled / disassembled

N04 This part is not available for service

※1～※4 REFER TO ILLUST NO.1 OF 2

11F5

117250-D

(1111-1507)K3VE

ILLUST NO.2 OF 2

ILLUST NO. 2 OF 2

K3VE

※1 UNDER VIEW
Parts not included as component part of PNC 11401

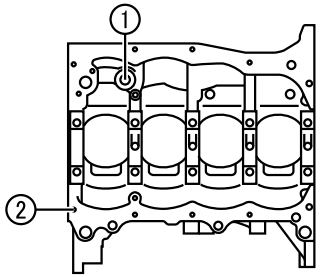

1	15310J
2	92122-B0614

※2 REAR VIEW
Parts included as component part of PNC 11401

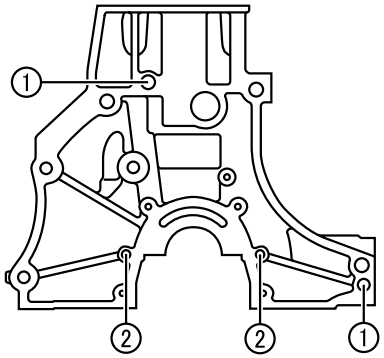

1	90042-50514(2)
2	9004A-25021(2)

※3 UNDER VIEW OF OIL PAN
Parts included as component part of PNC 12101

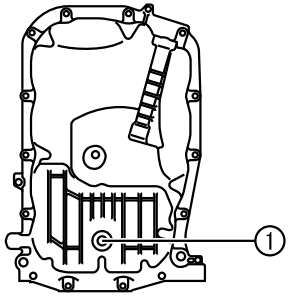

1	12101B 12101A

※4 UNDER VIEW OF OIL PAN
Parts not included as component part of PNC 12101

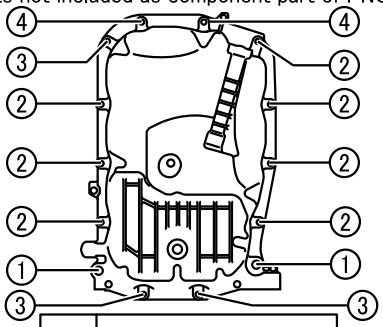

1	Ⓑ— 91552-E1025(2)
2	Ⓑ— 91671-80618(7)
3	Ⓝ— 94151-20641(3)
4	Ⓑ— 91671-80620(2)

FIG.11-05 CYLINDER BLOCK

(1507-)1NRVE,2NRVE

ILLUST NO.1 OF 2 ILLUST NO. 1 OF 2

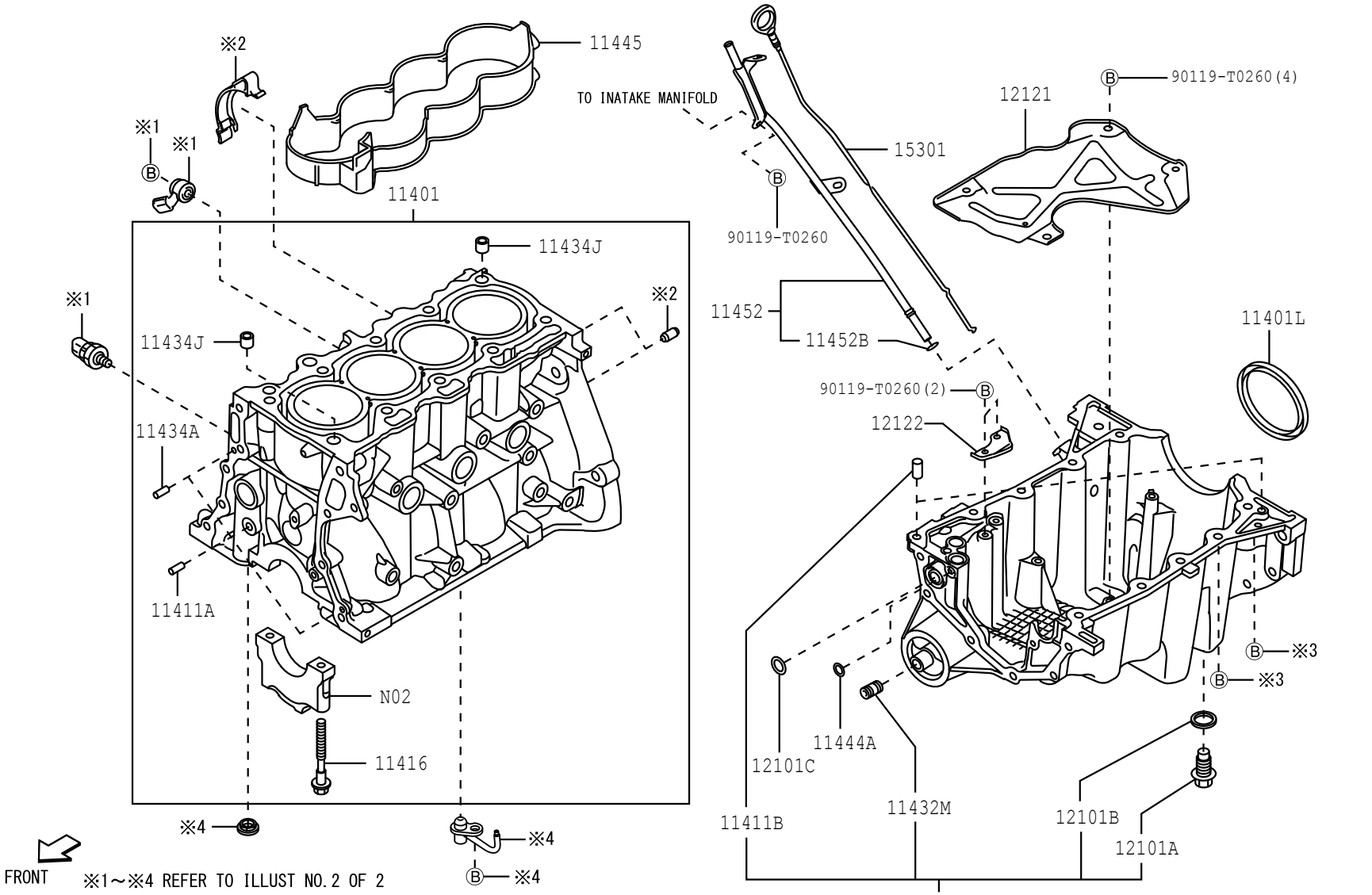

※1～※4 REFER TO ILLUST NO.2 OF 2

N02 This part is not supplied as an individual part, because it is necessary to maintenance specially after the part assembled / disassembled

11F5

11A673-A

※1 RIGHT SIDE VIEW

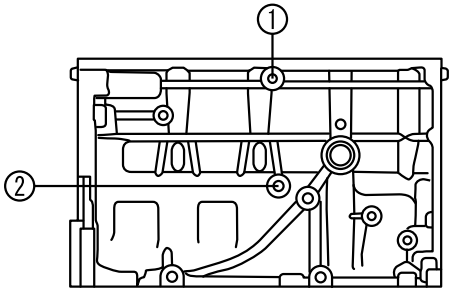

1	REFER TO FIG 84-01 Ⓑ REFER TO FIG 84-01 (PNC 89615)	2	REFER TO FIG 84-01 (PNC 83530)

※2 REAR VIEW

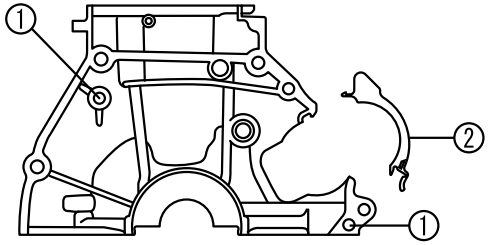

Parts included as component part of PNC 11401

1	11434B

Parts not included as component part of PNC 11401

2	11363A

※3 UNDER VIEW OF OIL PAN
Parts not included as component part of PNC 12101

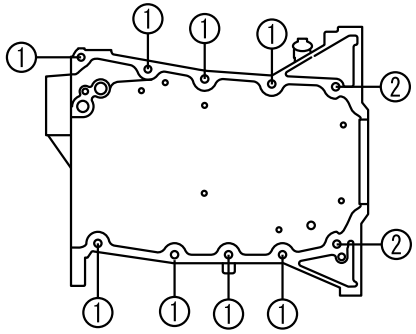

1	Ⓑ 90105-T0247(8)	2	Ⓑ 90105-T0272(2) (-1511) 90105-T0271(2) (1512-)

※4 UNDER VIEW
Parts not included as component part of PNC 11401

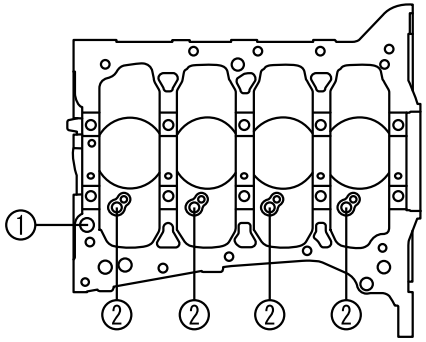

1	15471A	2	15708 Ⓑ 15797

11F5

11A674-A

PROD_DATE	MODELS	SPEC CODE	DESCRIPTION	R/P	PART NUMBER	QYT	REV_REF FR	REV_REF TO
	+----------+							
	| 11363A | COVER, FLYWHEEL HOUSING SIDE							
	+----------+							
1507 - 1901	1NRVE..F653				11363-BZ010-	1		
1901 -	1NRVE,2NRVE..F65#				11363-BZ010-	1		
	+----------+							
	| 11401 | BLOCK SUB-ASSY, CYLINDER							
	+----------+							
1111 - 1507	EJVE..F650				11401-B9350-	1		
1111 - 1507	K3VE..F651				11401-B9500-	1		
1507 - 1607	EJVE..F650				11401-B9350-	1		
1507 - 1901	1NRVE..F653				11410-B9010-	1		
1901 -	1NRVE..F653				11410-B9010-	1		
1901 -	2NRVE..F654				11410-B9020-	1		
	+----------+							
	| 11401G | SENSOR, CRANK POSITION							
	+----------+							
1111 - 1507	EJVE..F650				19311-BZ010-	1		
1507 - 1607	EJVE..F650				19311-BZ010-	1		
	+----------+							
	| 11401K | UNION(FOR OIL FILTER BRACKET)							
	+----------+							
1111 - 1507	K3VE..F651				90044-04120-	1		
1111 - 1507	EJVE..F650				9004A-40021-	1		
1507 - 1607	EJVE..F650				9004A-40021-	1		
	+----------+							
	| 11401L | SEAL, ENGINE REAR OIL							
	+----------+							
1507 - 1901	1NRVE..F653				90311-T0074-	1		
1901 -	1NRVE,2NRVE..F65#				90311-T0074-	1		
	+----------+							
	| 11411A | PIN, RING(FOR CYLINDER BLOCK NO.1)							
	+----------+							
1507 - 1901	1NRVE..F653		L=36,OD=10		90250-10030-	1		
1901 -	1NRVE,2NRVE..F65#		L=36,OD=10		90250-10030-	1		

FIG.11-05 CYLINDER BLOCK

PROD_DATE	MODELS	SPEC CODE	DESCRIPTION	R/P	PART NUMBER	QYT	REV_REF FR	REV_REF TO
	+----------+							
	| 11411B | PIN, RING(FOR CYLINDER BLOCK NO.2)							
	+----------+							
1507 - 1901	1NRVE..F653		L=18,OD=8		90250-08120-	2		
				#	(90250-08120-000)	1		
1901 - 2006	1NRVE,2NRVE..F65#		L=18,OD=8		90250-08120-	2		
				#	(90250-08120-000)	1		
2007 -	1NRVE,2NRVE..F65#				9004A-25044-	2		
	+----------+							
	| 11415A | PLUG, WATER DRAIN COCK(FOR CYLINDER BLOCK							
	+----------+)							
1111 - 1507	K3VE..F651				90048-08005-	1		
	+----------+							
	| 11416 | BOLT(FOR CRANKSHAFT BEARING CAP SET)							
	+----------+							
1111 - 1507	K3VE..F651				90041-05271-	10		
1111 - 1507	EJVE..F650				90048-01040-	8		
1507 - 1607	EJVE..F650				90048-01040-	8		
1507 - 1901	1NRVE..F653				90910-02175-	10		
1901 -	1NRVE,2NRVE..F65#				90910-02175-	10		
	+----------+							
	| 11432M | UNION(FOR CYLINDER BLOCK)							
	+----------+							
1507 - 1805	1NRVE..F653				90404-19011-	1		
1806 - 1901	1NRVE..F653				90404-T0005-	1		
1901 -	1NRVE,2NRVE..F65#				90404-T0005-	1		
	+----------+							
	| 11434A | PIN, STRAIGHT(FOR TIMING GEAR COVER SET)							
	+----------+							
1507 - 1901	1NRVE..F653		L=12,OD=4.0		90250-04097-	2		
1901 -	1NRVE,2NRVE..F65#		L=12,OD=4.0		90250-04097-	2		
	+----------+							
	| 11434B | PIN, STRAIGHT(FOR CLUTCH HOUSING SET)							
	+----------+							
1507 - 1901	1NRVE..F653		L=22,OD=10		90250-10113-	2		
1901 -	1NRVE,2NRVE..F65#		L=22,OD=10		90250-10113-	2		

PROD_DATE	MODELS	SPEC CODE	DESCRIPTION	R/P	PART NUMBER	QYT	REV_REF FR	REV_REF TO
	+----------+							
	| 11434J | PIN, RING (FOR CYLINDER HEAD SET)							
	+----------+							
1111 - 1507	K3VE..F651		L=12,OD=12		90042-53013-	2		
1507 - 1901	1NRVE..F653		L=12,OD=13		90253-13017-	2		
				#	(90253-13017-000)	1		
1901 -	1NRVE,2NRVE..F65#		L=12,OD=13		90253-13017-	2		
				#	(90253-13017-000)	1		
	+----------+							
	| 11444A | RING, O							
	+----------+							
1111 - 1507	K3VE,EJVE..F65#				96723-24016-	1		
1507 - 1607	EJVE..F650				96723-24016-	1		
1507 - 1901	1NRVE..F653				90301-T0055-	1		
1901 -	1NRVE,2NRVE..F65#				90301-T0055-	1		
	+----------+							
	| 11445 | SPACER, CYLINDER BLOCK WATER JACKET							
	+----------+							
1507 - 1901	1NRVE..F653				11445-0Y020-	1		
1901 -	1NRVE,2NRVE..F65#				11445-0Y020-	1		
	+----------+							
	| 11448 | ORIFICE, CYLINDER BLOCK OIL							
	+----------+							
1111 - 1507	EJVE..F650				11448-BZ010-	1		
				#	(11448-87201-)	1		
1507 - 1607	EJVE..F650				11448-BZ010-	1		
				#	(11448-87201-)	1		
	+----------+							
	| 11452 | GUIDE, OIL LEVEL GAGE							
	+----------+							
1111 - 1507	EJVE..F650				11452-BZ020-	1		
1111 - 1507	K3VE..F651				11452-BZ050-	1		
1507 - 1607	EJVE..F650				11452-BZ020-	1		
1507 - 1807	1NRVE..F653				11409-BZ100-	1		
1808 - 1901	1NRVE..F653				11409-BZ101-	1		
1901 -	1NRVE,2NRVE..F65#				11409-BZ101-	1		

FIG.11-05 CYLINDER BLOCK

PROD_DATE	MODELS	SPEC CODE	DESCRIPTION	R/P	PART NUMBER	QYT	REV_REF FR	REV_REF TO
	+----------+							
	| 11452B | RING, O(FOR OIL LEVEL GAGE GUIDE)							
	+----------+							
1507 - 1604	1NRVE..F653				9004A-30047-	1		
1605 - 1901	1NRVE..F653				9004A-30058-	1		
1901 -	1NRVE,2NRVE..F65#				9004A-30058-	1		
	+----------+							
	| 12101 | PAN SUB-ASSY, OIL							
	+----------+							
1111 - 1507	EJVE..F650				12101-97202-	1		
1111 - 1507	K3VE..F651				12101-B1040-	1		
1507 - 1607	EJVE..F650				12101-97202-	1		
1507 - 1901	1NRVE..F653				12101-BZ090-	1		
1901 -	1NRVE,2NRVE..F65#				12101-BZ090-	1		
	+----------+							
	| 12101A | PLUG(FOR OIL PAN DRAIN)							
	+----------+							
1111 - 1507	EJVE..F650				90043-41041-	1		
1111 - 1507	K3VE..F651				90043-41087-	1		
1507 - 1607	EJVE..F650				90043-41041-	1		
1507 - 1901	1NRVE..F653				9004A-34015-	1		
				#	(90043-41087-)	1		
1901 -	1NRVE,2NRVE..F65#				9004A-34015-	1		
				#	(90043-41087-)	1		
	+----------+							
	| 12101B | GASKET(FOR OIL PAN DRAIN PLUG)							
	+----------+							
1111 - 1507	K3VE,EJVE..F65#				90044-30281-	1		
1507 - 1607	EJVE..F650				90044-30281-	1		
1507 - 1901	1NRVE..F653				9004A-43022-	1		
				#	(90044-30281-)	1		
1901 -	1NRVE,2NRVE..F65#				9004A-43022-	1		
				#	(90044-30281-)	1		
	+----------+							
	| 12101C | RING, O(FOR OIL PAN)							
	+----------+							
1507 - 1901	1NRVE..F653				90301-T0057-	1		

PROD_DATE	MODELS	SPEC CODE	DESCRIPTION	R/P	PART NUMBER	QYT	REV_REF FR	REV_REF TO
	+----------+							
	| 12101C | RING, O(FOR OIL PAN)							
	CONTINUED--+							
1901 -	1NRVE,2NRVE..F65#				90301-T0057-	1		
	+----------+							
	| 12101E | PLUG, OIL PAN(FOR OIL COOLER)							
	+----------+							
1111 - 1507	K3VE..F651				90043-41076-	1		
	+----------+							
	| 12101F | GASKET(FOR OIL COOLER)							
	+----------+							
1111 - 1507	K3VE..F651				90044-30290-	1		
	+----------+							
	| 12112 | PAN, OIL NO.							
	+----------+ 2							
1111 - 1507	K3VE..F651				12111-B1040-	1		
	+----------+							
	| 12121 | PLATE, OIL PAN BAFFLE, NO.1							
	+----------+							
1507 - 1901	1NRVE..F653				12121-BZ070-	1		
1901 -	1NRVE,2NRVE..F65#				12121-BZ070-	1		
	+----------+							
	| 12122 | PLATE, OIL PAN BAFFLE, NO.2							
	+----------+							
1507 - 1901	1NRVE..F653				12122-BZ010-	1		
1901 -	1NRVE,2NRVE..F65#				12122-BZ010-	1		
	+----------+							
	| 15301 | GAGE SUB-ASSY, OIL LEVEL							
	+----------+							
1111 - 1507	K3VE..F651				15301-BZ040-	1		
1111 - 1507	EJVE..F650				15301-BZ080-	1		
1507 - 1607	EJVE..F650				15301-BZ080-	1		
1507 - 1901	1NRVE..F653				15301-BZ100-	1		
1901 -	1NRVE,2NRVE..F65#				15301-BZ100-	1		
	+----------+							
	| 15301A | RING, O(FOR OIL LEVEL GAGE)							
	+----------+							
1111 - 1507	K3VE,EJVE..F65#				96721-19009-	1		
				#	(96721-19009-000)	1		

FIG.11-05 CYLINDER BLOCK

PROD_DATE	MODELS	SPEC CODE	DESCRIPTION	R/P	PART NUMBER	QYT	REV_REF FR	REV_REF TO
	+----------+							
	| 15301A | RING, O(FOR OIL LEVEL GAGE)							
	CONTINUED--+							
1507 - 1607	EJVE..F650				96721-19009-	1		
				#	(96721-19009-000)	1		
	+----------+							
	| 15310J | REGULATOR ASSY, OIL							
	+----------+							
1111 - 1507	K3VE..F651				15310-97401-	1		
	+----------+							
	| 15471A | GASKET(FOR CLYINDER BLOCK)							
	+----------+							
1507 - 1901	1NRVE..F653				90430-T0023-	1		
1901 -	1NRVE,2NRVE..F65#				90430-T0023-	1		
	+----------+							
	| 15708 | NOZZLE SUB-ASSY, OIL, NO.1							
	+----------+							
1111 - 1507	K3VE..F651				15708-97402-	1		
1507 - 1901	1NRVE..F653				15708-0Y040-	4		
1901 -	1NRVE,2NRVE..F65#				15708-0Y040-	4		
	+----------+							
	| 15797 | BOLT, OIL NOZZLE UNION							
	+----------+							
1507 - 1901	1NRVE..F653				90110-T0002-	4		
				#	(90110-06040-)	1		
1901 -	1NRVE,2NRVE..F65#				90110-T0002-	4		
				#	(90110-06040-)	1		

FIG. 11-06 TIMING GEAR COVER & REAR END PLATE

(1111-)EJVE

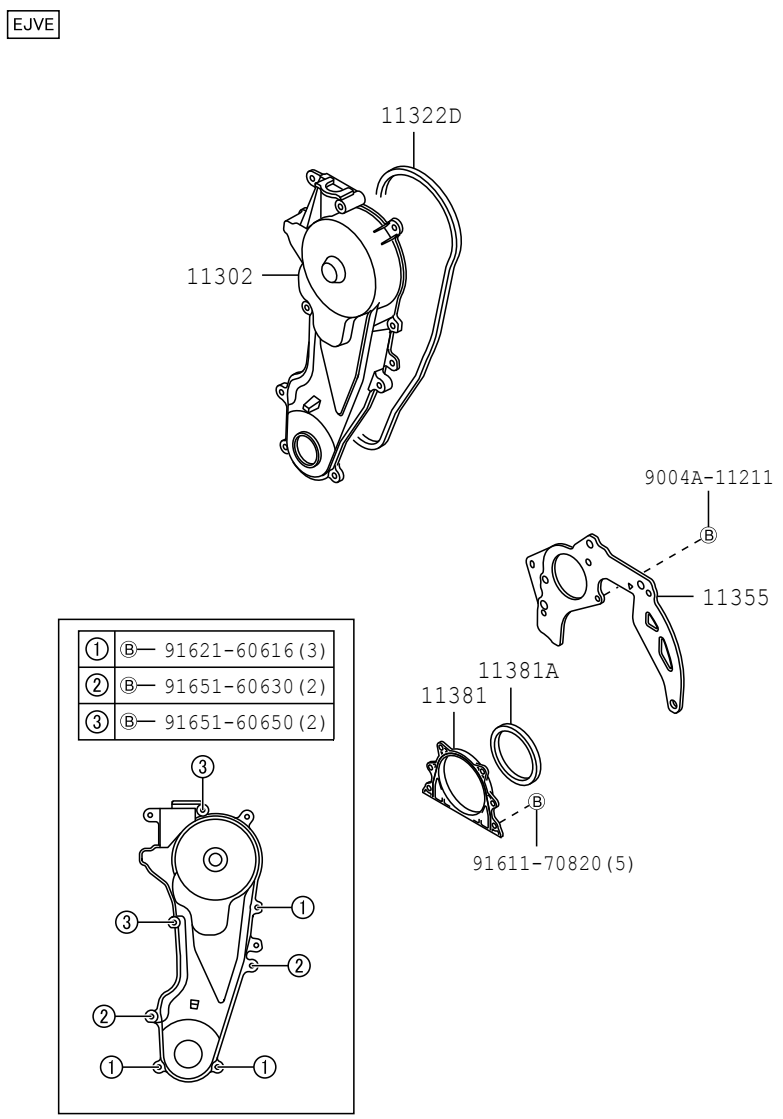

11F6

117255-A

FIG. 11-06 TIMING GEAR COVER & REAR END PLATE

(1111-1507)K3VE

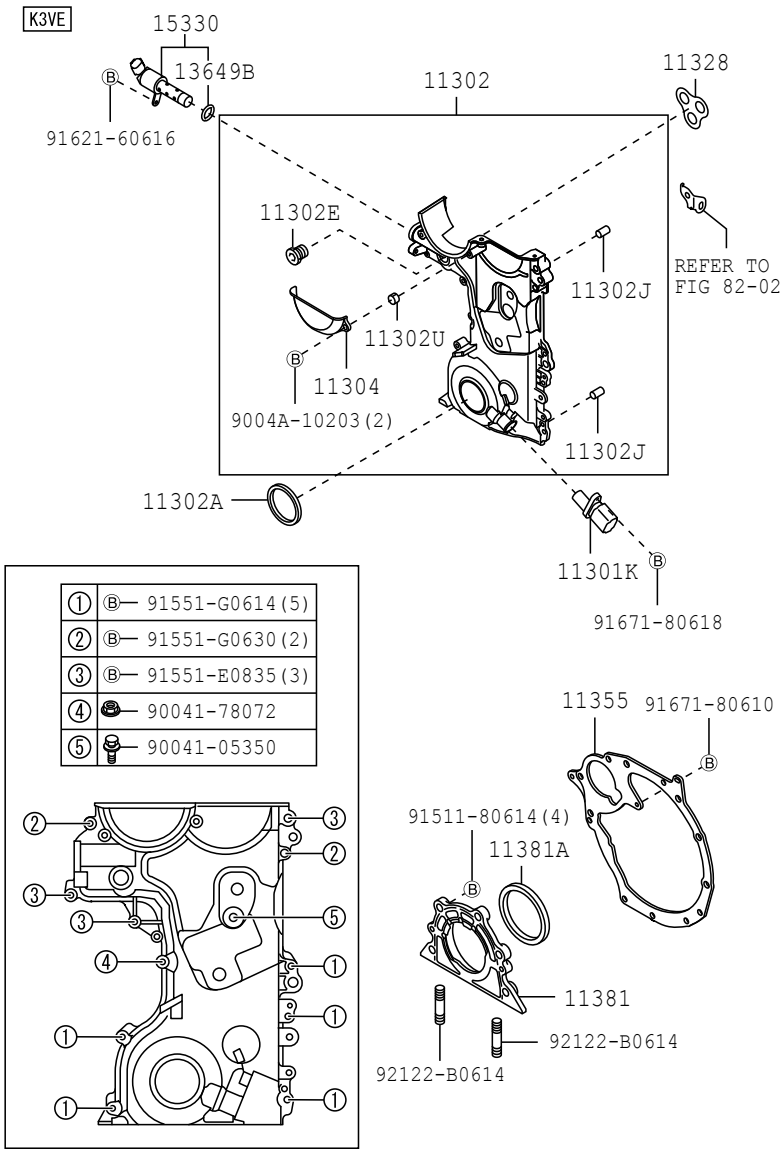

11F6

117257-D

(1507-)1NRVE, 2NRVE

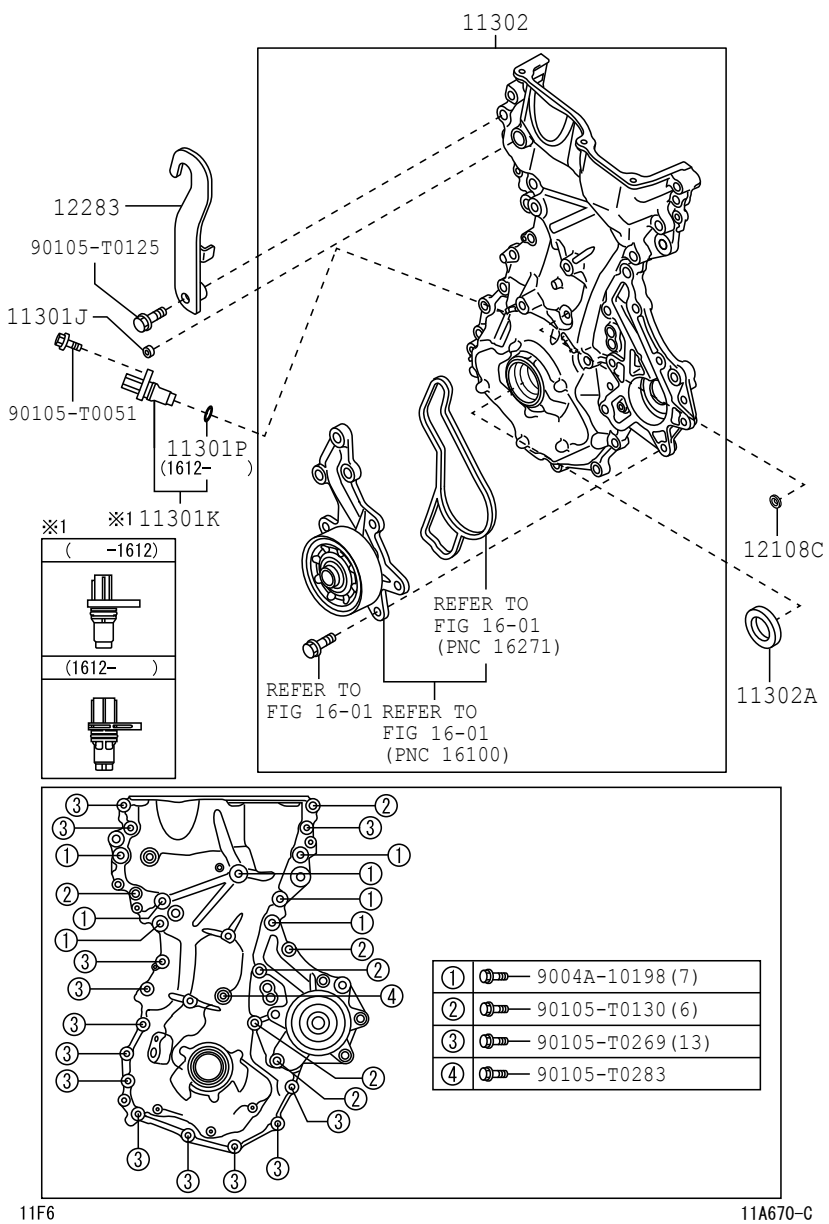

FIG. 11-06 TIMING GEAR COVER & REAR END PLATE

PROD_DATE	MODELS	SPEC CODE	DESCRIPTION	R/P	PART NUMBER	QYT	REV_REF FR	REV_REF TO
	11301J	PLUG, W/HEAD STRAIGHT SCREW(FOR TIMING GEAR CASE)						
1507 - 1603	1NRVE..F653				90344-53008-	1		
1604 - 1901	1NRVE..F653				90043-44022-	1		
1901 -	1NRVE, 2NRVE..F65#				90043-44022-	1		
	11301K	SENSOR, CRANK POSITION						
1111 - 1507	K3VE..F651				19311-BZ020-	1		
				#	(19311-97401-)	1		
1507 - 1612	1NRVE..F653				9004A-19004-	1		
1612 - 1901	1NRVE..F653				90919-T5001-	1		
1901 -	1NRVE, 2NRVE..F65#				90919-T5001-	1		
	11301P	O RING, CRANK POSITION SENSOR						
1612 - 1901	1NRVE..F653				9004A-30059-	1		
				#	(90301-14016-)	1		
1901 -	1NRVE, 2NRVE..F65#				9004A-30059-	1		
				#	(90301-14016-)	1		
	11302	COVER SUB-ASSY, TIMING CHAIN OR BELT						
1111 - 1507	EJVE..F650				11302-87Z03-	1		
1111 - 1507	K3VE..F651				11310-BZ050-	1		
1507 - 1607	EJVE..F650				11302-87Z03-	1		
1507 - 1901	1NRVE..F653				11310-BZ130-	1		
1901 -	1NRVE, 2NRVE..F65#				11310-BZ130-	1		
	11302A	SEAL, OIL(FOR TIMING CHAIN OR BELT COVER)						
1111 - 1311	K3VE..F651				9004A-31021-	1		
				#	(90043-11428-)	1		
1311 - 1507	K3VE..F651				9004A-31057-	1		
				#	(90043-11428-)	1		
1507 - 1901	1NRVE..F653				90311-T0076-	1		

PROD_DATE	MODELS	SPEC CODE	DESCRIPTION	R/P	PART NUMBER	QYT	REV_REF FR	REV_REF TO
	+----------+							
	| 11302A | SEAL, OIL(FOR TIMING CHAIN OR BELT COVER)							
	CONTINUED--+							
1901 -	1NRVE,2NRVE..F65#				90311-T0076-	1		
	+----------+							
	| 11302E | PLUG, STRAIGHT(FOR TIMING GEAR COVER)							
	+----------+							
1111 - 1507	K3VE..F651				90043-41075-	1		
	+----------+							
	| 11302J | PIN, STRAIGHT(FOR TIMING CHAIN COVER)							
	+----------+							
1111 - 1507	K3VE..F651				9004A-25021-	2		
				#	(90042-50142-)	1		
	+----------+							
	| 11302U | PIN, RING							
	+----------+							
1111 - 1507	K3VE..F651		L=5.5,OD=8		90042-53010-	2		
	+----------+							
	| 11304 | COVER, TIMING CHAIN OR BELT, NO.2							
	+----------+							
1111 - 1507	K3VE..F651				11322-BZ050-	1		
				#	(11322-B1010-)	1		
	+----------+							
	| 11322D | GASKET, TIMING BELT COVER, NO.1							
	+----------+							
1111 - 1507	EJVE..F650				11328-BZ040-	1		
1507 - 1607	EJVE..F650				11328-BZ040-	1		
	+----------+							
	| 11328 | GASKET, TIMING GEAR OR CHAIN COVER							
	+----------+							
1111 - 1507	K3VE..F651				11328-BZ010-	1		
	+----------+							
	| 11355 | PLATE, REAR END							
	+----------+							
1111 - 1507	K3VE..F651				11355-BZ011-	1		
1111 - 1507	EJVE..F650				11355-BZ021-	1		
1507 - 1607	EJVE..F650				11355-BZ021-	1		
	+----------+							
	| 11381 | RETAINER, ENGINE REAR OIL SEAL							
	+----------+							
1111 - 1507	K3VE..F651				11381-BZ010-	1		
				#	(11381-97402-)	1		

FIG.11-06 TIMING GEAR COVER & REAR END PLATE

PROD_DATE	MODELS	SPEC CODE	DESCRIPTION	R/P	PART NUMBER	QYT	REV_REF FR	REV_REF TO
	+----------+							
	| 11381 | RETAINER, ENGINE REAR OIL SEAL							
	CONTINUED--+							
1111 - 1507	EJVE..F650				11381-BZ020-	1		
1507 - 1607	EJVE..F650				11381-BZ020-	1		
	+----------+							
	| 11381A | SEAL, ENGINE REAR OIL							
	+----------+							
1111 - 1311	EJVE..F650				9004A-31019-	1		
1111 - 1507	K3VE..F651				9004A-31020-	1		
				#	(90311-73005-)	1		
1311 - 1507	EJVE..F650				9004A-31056-	1		
1507 - 1607	EJVE..F650				9004A-31056-	1		
	+----------+							
	| 12108C | GASKET							
	+----------+							
1507 - 1901	1NRVE..F653				16258-0Y010-	1		
1901 -	1NRVE,2NRVE..F65#				16258-0Y010-	1		
	+----------+							
	| 12283 | HANGER, ENGINE, NO.3							
	+----------+							
1507 - 1901	1NRVE..F653				12283-BZ030-	33		
1901 -	1NRVE,2NRVE..F65#				12283-BZ030-	33		
	+----------+							
	| 13649B | RING, O							
	+----------+							
1111 - 1507	K3VE..F651				90043-01262-	1		
	+----------+							
	| 15330 | VALVE ASSY, CAM TIMING OIL CONTROL							
	+----------+							
1111 - 1507	K3VE..F651				15330-BZ070-	1		

FIG. 11-07 MOUNTING

(1111-1507)K3VE

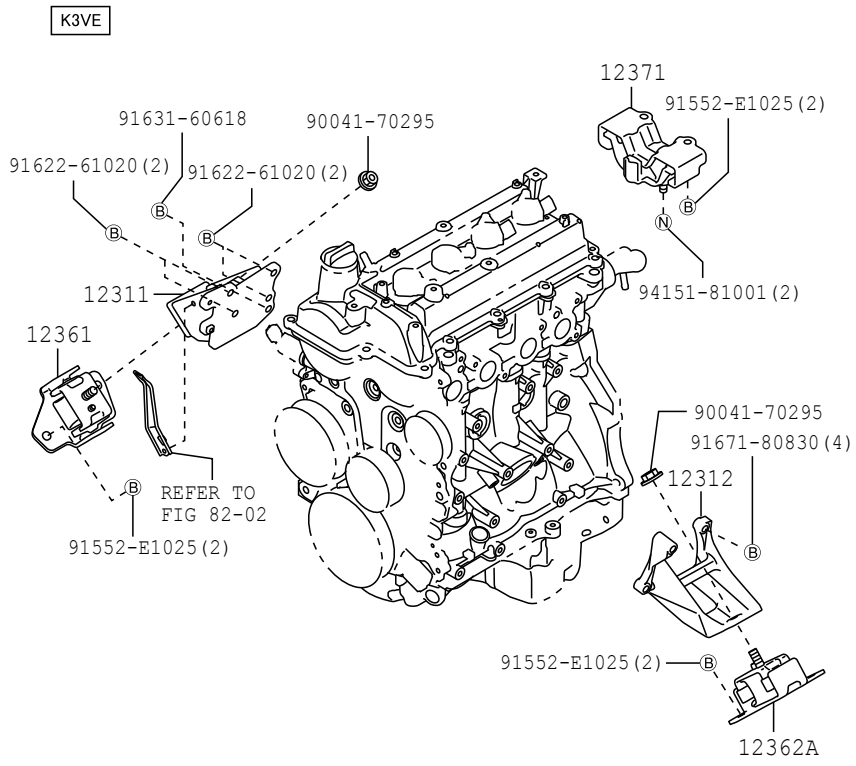

11F7

117258-A

FIG. 11-07 MOUNTING

(1111-1507)EJVE

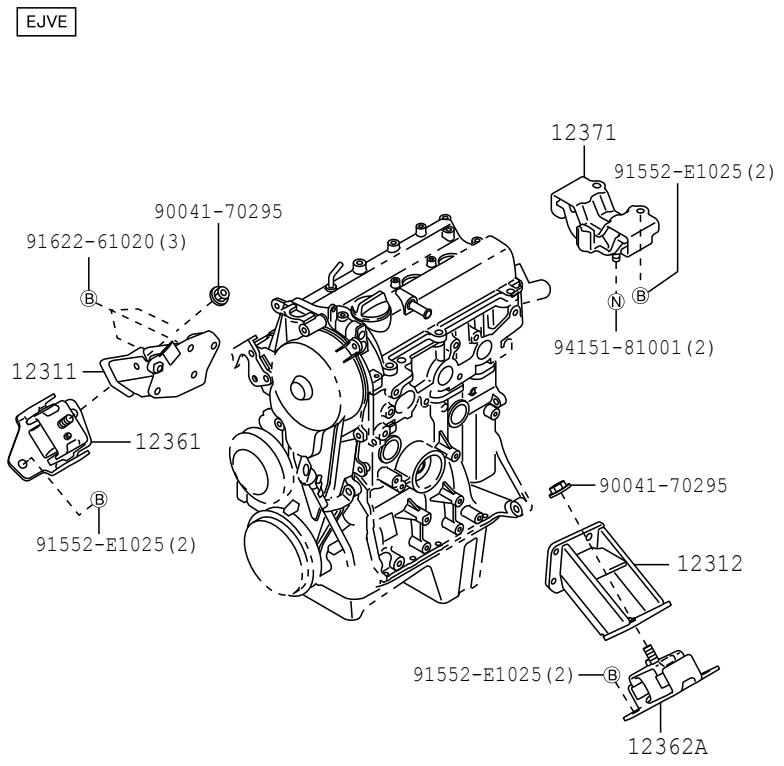

11F7

117259

(1507-)1NRVE, 2NRVE

NRVE

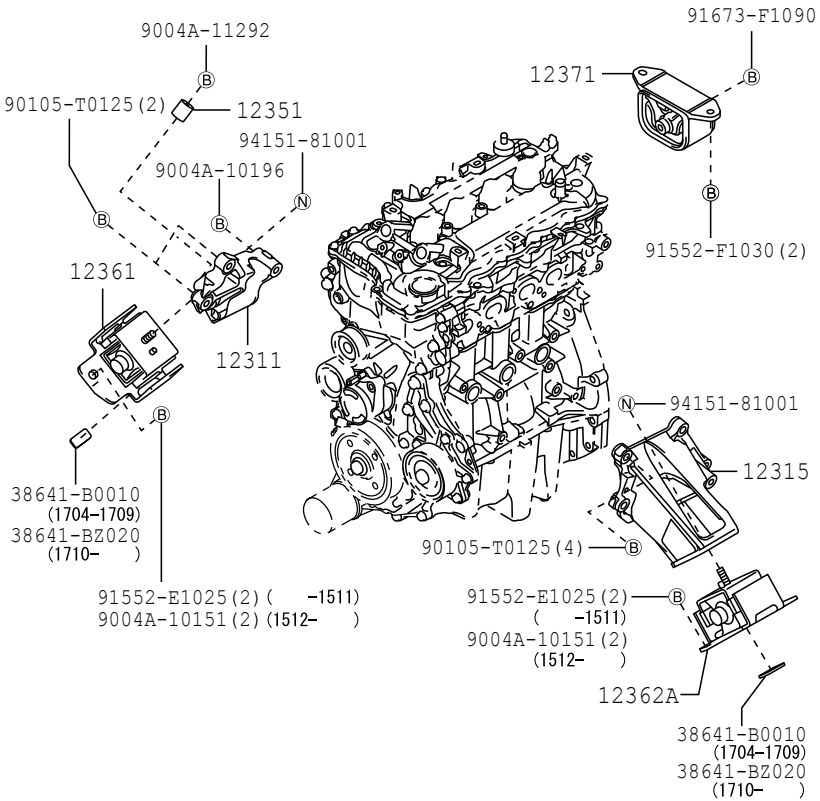

11F7

11A671-G

(1507-)EJVE

EJVE

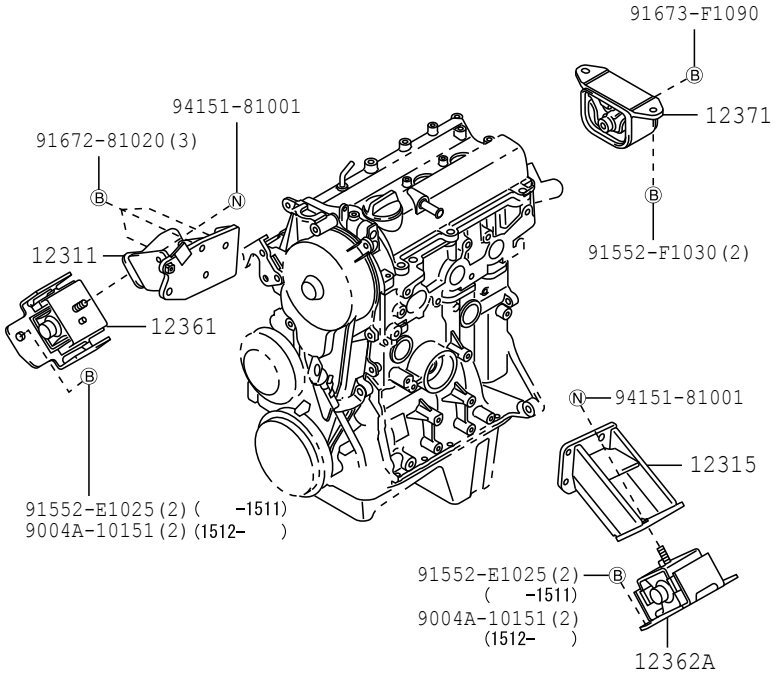

11F7

11A672-B

PROD_DATE	MODELS	SPEC CODE	DESCRIPTION	R/P	PART NUMBER	QYT	REV_REF FR	REV_REF TO
	+----------+							
	| 12311 | BRACKET, ENGINE MOUNTING, FRONT NO.1 RH							
	+----------+							
1111 - 1507	EJVE..F650				12311-BZ010-	1		
1111 - 1507	K3VE..F651				12311-BZ020-	1		
1507 - 1607	EJVE..F650				12311-BZ130-	1		
1507 - 1901	1NRVE..F653				12311-BZ120-	1		
1901 -	1NRVE,2NRVE..F65#				12311-BZ120-	1		
	+----------+							
	| 12312 | BRACKET, ENGINE MOUNTING, FRONT NO.2							
	+----------+							
1111 - 1507	EJVE..F650				12312-BZ010-	1		
1111 - 1507	K3VE..F651				12312-BZ020-	1		
	+----------+							
	| 12315 | BRACKET, ENGINE MOUNTING, FRONT NO.1 LH							
	+----------+							
1507 - 1607	EJVE..F650				12315-BZ070-	1		
1507 - 1901	1NRVE..F653				12315-BZ060-	1		
1901 -	1NRVE,2NRVE..F65#				12315-BZ060-	1		
	+----------+							
	| 12351 | DAMPER, ENGINE MOUNTING							
	+----------+							
1507 - 1901	1NRVE..F653				12351-BZ040-	1		
1901 -	1NRVE,2NRVE..F65#				12351-BZ040-	1		
	+----------+							
	| 12361 | INSULATOR, ENGINE MOUNTING, FRONT							
	+----------+							
1111 - 1310	K3VE..F651..E4AT				12361-BZ140-	1		
1111 - 1404	K3VE,EJVE..F65#..5F				12361-BZ130-	1		
1311 - 1405	K3VE..F651..E4AT				12361-BZ141-	1		
1404 - 1408	K3VE,EJVE..F65#..5F				12361-BZ220-	1		
1406 - 1507	K3VE..F651..E4AT				12361-BZ142-	1		
1409 - 1507	K3VE,EJVE..F65#..5F				12361-BZ132-	1		
1507 - 1607	EJVE..F650				12361-BZ200-	1		
1507 - 1901	1NRVE..F653				12361-BZ200-	1		

FIG.11-07 MOUNTING

PROD_DATE	MODELS	SPEC CODE	DESCRIPTION	R/P	PART NUMBER	QYT	REV_REF FR	REV_REF TO
	+----------+							
	| 12361 | INSULATOR, ENGINE MOUNTING, FRONT							
	CONTINUED--+							
1901 -	1NRVE,2NRVE..F65#				12361-BZ200-	1		
	+----------+							
	| 12362A | INSULATOR, ENGINE MOUNTING, FRONT LH							
	+----------+							
1111 - 1408	K3VE..F651				12362-BZ130-	1		
1111 - 1410	EJVE..F650				12362-BZ110-	1		
1409 - 1507	K3VE..F651				12362-BZ131-	1		
1411 - 1507	EJVE..F650				12362-BZ111-	1		
1507 - 1607	EJVE..F650				12361-BZ200-	1		
1507 - 1901	1NRVE..F653				12361-BZ200-	1		
1901 -	1NRVE,2NRVE..F65#				12361-BZ200-	1		
	+----------+							
	| 12371 | INSULATOR, ENGINE MOUNTING, REAR NO.1							
	+----------+							
1111 - 1303	EJVE..F650				12371-BZ110-	1		
1111 - 1303	K3VE..F651..E4AT				12371-BZ110-	1		
1111 - 1303	K3VE..F651..5F				12371-BZ120-	1		
1304 - 1507	EJVE..F650				12371-BZ111-	1		
1304 - 1507	K3VE..F651..E4AT				12371-BZ111-	1		
1304 - 1507	K3VE..F651..5F				12371-BZ121-	1		
1507 - 1607	EJVE..F650				12371-BZ170-	1		
1507 - 1901	1NRVE..F653				12371-BZ170-	1		
1901 -	1NRVE,2NRVE..F65#				12371-BZ170-	1		

FIG. 12-01 VENTILATION HOSE

(1111-1507)K3VE

K3VE

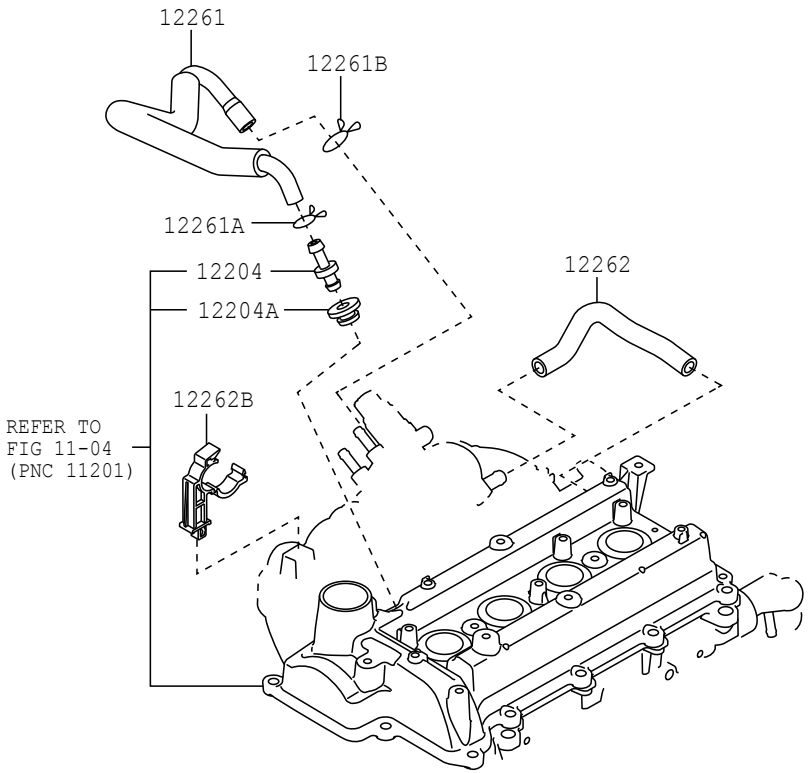

12F1

120823

FIG. 12-01 VENTILATION HOSE

(1111-1607)EJVE

EJVE

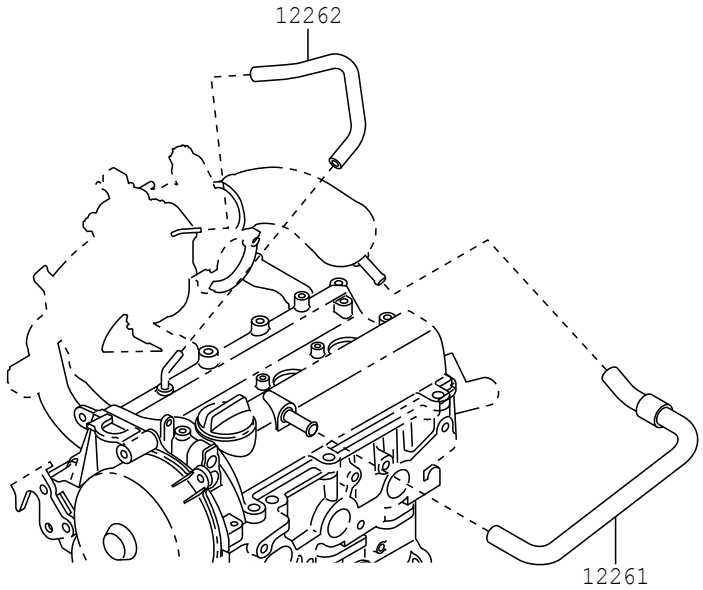

12F1

120824

FIG. 12-01 VENTILATION HOSE

(1507-) 1NRVE, 2NRVE

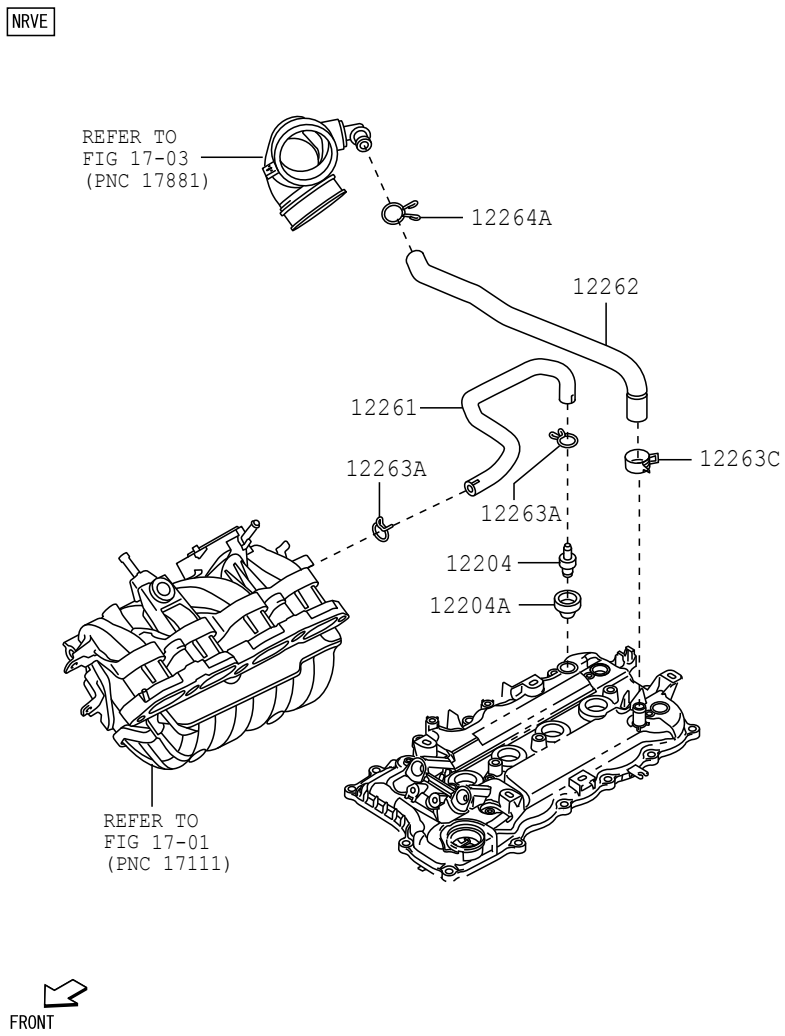

12F1 121026

FIG. 12-01 VENTILATION HOSE

PROD_DATE	MODELS	SPEC CODE	DESCRIPTION	R/P	PART NUMBER	QYT	REV_REF FR	REV_REF TO
	12204	VALVE SUB-ASSY, VENTILATION						
1111 - 1507	K3VE..F651				12204-97401-	1		
1507 - 1901	1NRVE..F653				12204-0Y020-	1		
1901 -	1NRVE, 2NRVE..F65#				12204-0Y020-	1		
	12204A	GROMMET(FOR VENTILATION SYSTEM)						
1111 - 1507	K3VE..F651				9004A-48040-	1		
1507 - 1605	1NRVE..F653				11249-47020-	1		
1606 - 1901	1NRVE..F653				90480-T0013-	1		
1901 -	1NRVE, 2NRVE..F65#				90480-T0013-	1		
	12261	HOSE, VENTILATION						
1111 - 1507	EJVE..F650				12261-BZ010-	1		
1111 - 1507	K3VE..F651				12261-BZ140-	1		
				#	(12261-B1010-)	1		
1507 - 1607	EJVE..F650				12261-BZ010-	1		
1507 - 1901	1NRVE..F653				12261-BZ160-	1		
1901 -	1NRVE, 2NRVE..F65#				12261-BZ160-	1		
	12261A	CLIP OR CLAMP(FOR VENTILATION HOSE)						
1111 - 1507	K3VE..F651				90467-14001-	1		
				#	(90467-14001-000)	1		
	12261B	CLIP OR CLAMP(FOR VENTILATION HOSE)						
1111 - 1507	K3VE..F651				90467-18003-	1		
				#	(90467-18003-000)	1		
	12262	HOSE, VENTILATION, NO.2						
1111 - 1507	EJVE..F650				12261-BZ030-	1		
1111 - 1507	K3VE..F651				12262-BZ010-	1		
				#	(12262-97401-)	1		

FIG.12-01 VENTILATION HOSE

PROD_DATE	MODELS	SPEC CODE	DESCRIPTION	R/P	PART NUMBER	QYT	REV_REF FR	REV_REF TO
	+----------+							
	| 12262 | HOSE, VENTILATION, NO.2							
	CONTINUED--+							
1507 - 1607	EJVE..F650				12261-BZ030-	1		
1507 - 1901	1NRVE..F653				12262-BZ080-	1		
1901 -	1NRVE,2NRVE..F65#				12262-BZ080-	1		
	+----------+							
	| 12262B | CLAMP(FOR VENTILATION HOSE)							
	+----------+							
1111 - 1507	K3VE..F651				90044-64813-	1		
	+----------+							
	| 12263A | CLIP(FOR VENTILATION HOSE)							
	+----------+							
1507 - 1901	1NRVE..F653				90466-T0061-	2		
1901 -	1NRVE,2NRVE..F65#				90466-T0061-	2		
	+----------+							
	| 12263C | CLIP(FOR VENTILATION HOSE)							
	+----------+							
1507 - 1901	1NRVE..F653				96136-52201-	1		
1901 -	1NRVE,2NRVE..F65#				96136-52201-	1		
	+----------+							
	| 12264A | CLIP(FOR VENTILATION HOSE)							
	+----------+							
1507 - 1901	1NRVE..F653				90466-T0063-	1		
				#	(90467-21004-)	1		
1901 -	1NRVE,2NRVE..F65#				90466-T0063-	1		
				#	(90467-21004-)	1		

(1111-1507)K3VE

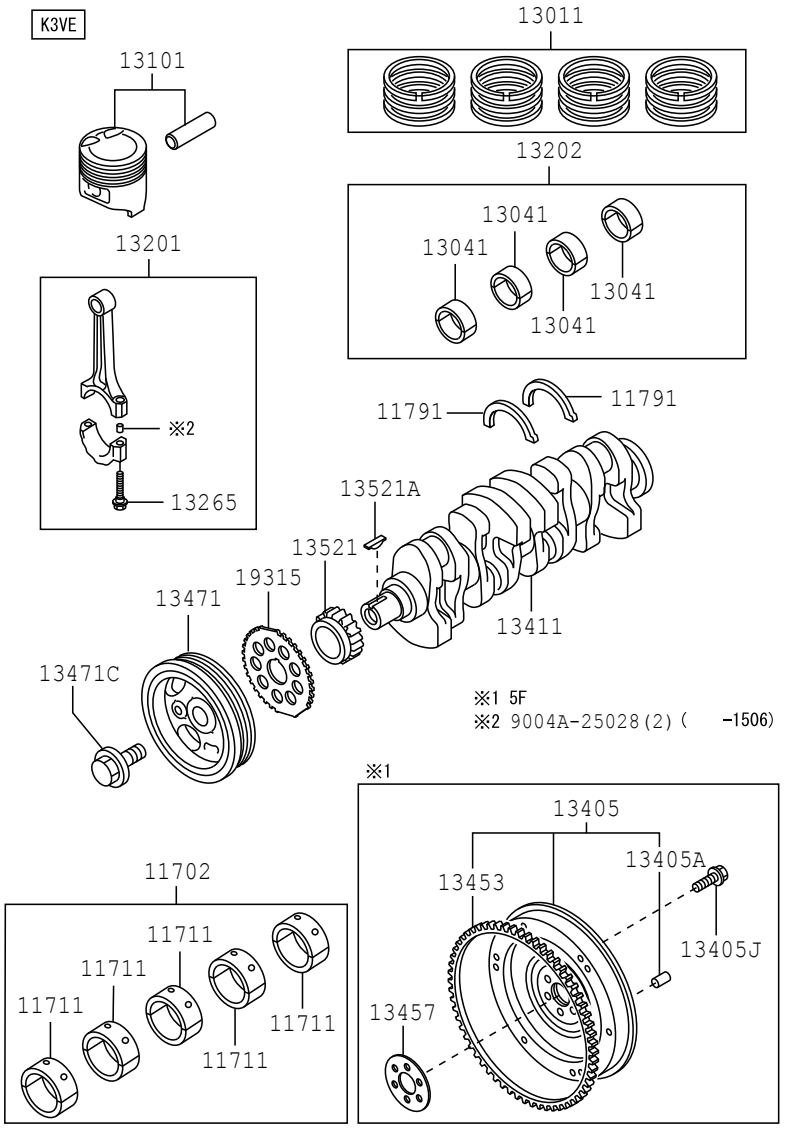

13F1

131791-A

(1111-1607)EJVE

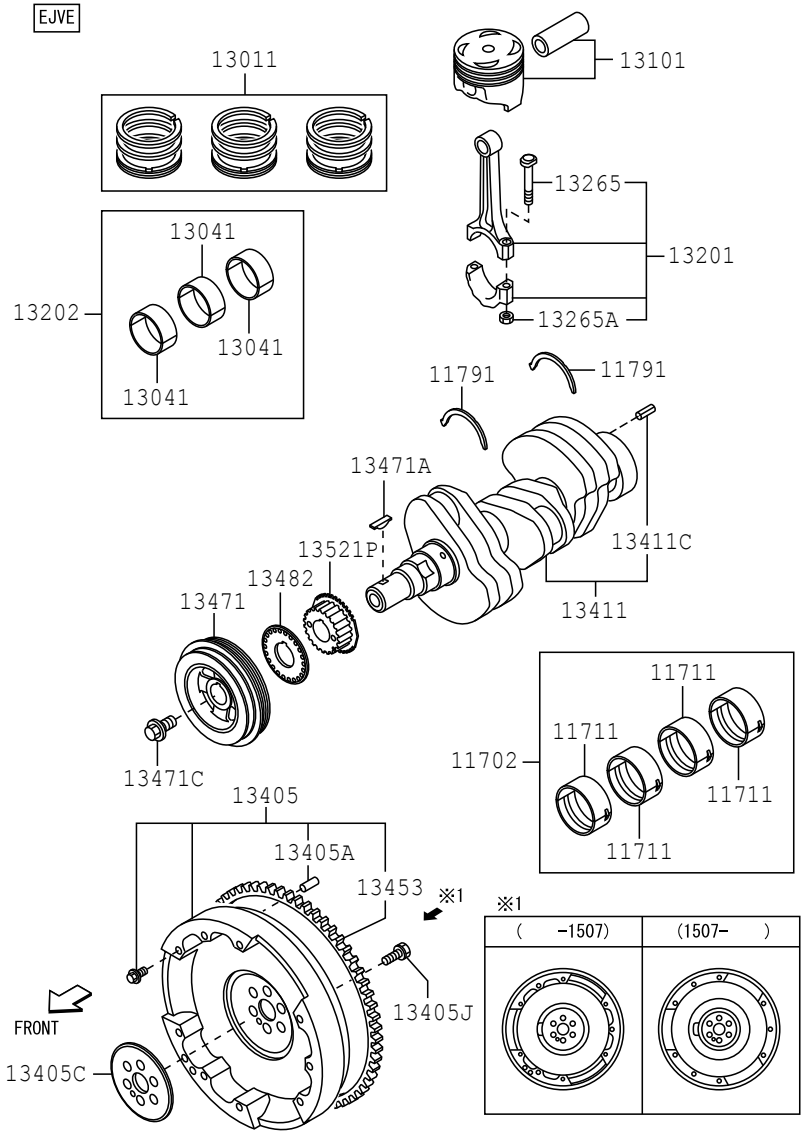

13F1

131792-C

(1507-)1NRVE,2NRVE

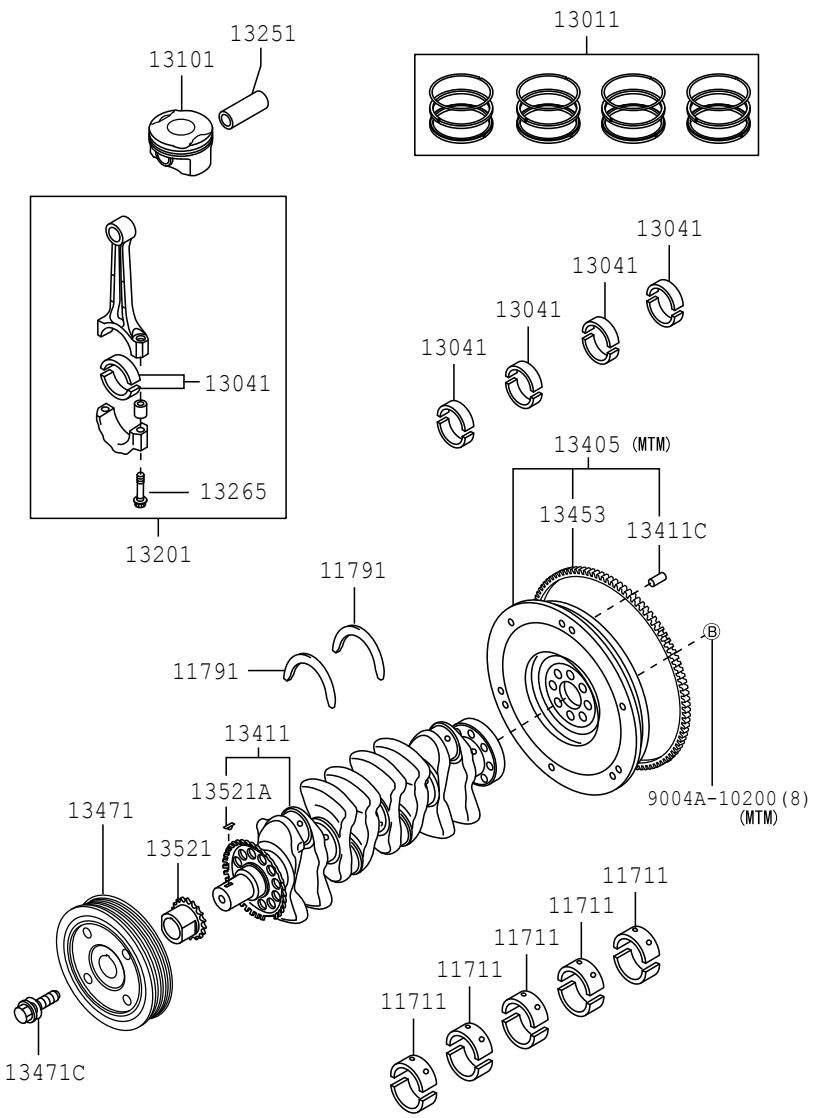

13F1

132296-A

PROD_DATE	MODELS	SPEC CODE	DESCRIPTION	R/P	PART NUMBER	QYT	REV_REF FR	REV_REF TO
	+----------+							
	| 11702 | BEARING SET, CRANKSHAFT							
	+----------+							
1111 - 1507	EJVE..F650		U/S 0.25		11704-B2010-	1		
1111 - 1507	K3VE..F651		U/S 0.25		11704-BZ090-	1		
1507 - 1607	EJVE..F650		U/S 0.25		11704-B2010-	1		
	+----------+							
	| 11711 | BEARING, CRANKSHAFT							
	+----------+							
1111 - 1507	EJVE..F650		MARK1		11701-BZ070-01	4		
1111 - 1507	EJVE..F650		MARK2		11701-BZ070-02	4		
1111 - 1507	EJVE..F650		MARK3		11701-BZ070-03	4		
1111 - 1507	EJVE..F650		MARK4		11701-BZ070-04	4		
1111 - 1507	EJVE..F650		MARK5		11701-BZ070-05	4		
1111 - 1507	EJVE..F650		MARK6		11701-BZ070-06	4		
1111 - 1507	EJVE..F650		MARK7		11701-BZ070-07	4		
1111 - 1507	K3VE..F651		MARK2		11701-BZ091-02	5		
1111 - 1507	K3VE..F651		MARK3		11701-BZ091-03	5		
1111 - 1507	K3VE..F651		MARK4		11701-BZ091-04	5		
1111 - 1507	K3VE..F651		MARK5		11701-BZ091-05	5		
1507 - 1607	EJVE..F650		MARK1		11701-BZ070-01	4		
1507 - 1607	EJVE..F650		MARK2		11701-BZ070-02	4		
1507 - 1607	EJVE..F650		MARK3		11701-BZ070-03	4		
1507 - 1607	EJVE..F650		MARK4		11701-BZ070-04	4		
1507 - 1607	EJVE..F650		MARK5		11701-BZ070-05	4		
1507 - 1607	EJVE..F650		MARK6		11701-BZ070-06	4		
1507 - 1607	EJVE..F650		MARK7		11701-BZ070-07	4		
1507 - 1901	1NRVE..F653		MARK2		11701-0Y030-02	5		
1507 - 1901	1NRVE..F653		MARK3		11701-0Y030-03	5		
1507 - 1901	1NRVE..F653		MARK4		11701-0Y030-04	5		

PROD_DATE	MODELS	SPEC CODE	DESCRIPTION	R/P	PART NUMBER	QYT	REV_REF FR	REV_REF TO
	+----------+							
	| 11711 | BEARING, CRANKSHAFT							
	CONTINUED--+							
1507 - 1901	1NRVE..F653		MARK5		11701-0Y030-05	5		
1901 -	1NRVE,2NRVE..F65#		MARK2		11701-0Y030-02	5		
1901 -	1NRVE,2NRVE..F65#		MARK3		11701-0Y030-03	5		
1901 -	1NRVE,2NRVE..F65#		MARK4		11701-0Y030-04	5		
1901 -	1NRVE,2NRVE..F65#		MARK5		11701-0Y030-05	5		
	+----------+							
	| 11791 | WASHER, CRANKSHAFT THRUST, UPPER							
	+----------+							
1111 - 1507	EJVE..F650		STD		11791-BZ070-	2		
1111 - 1507	K3VE..F651		STD		11791-BZ080-	2		
				#	(11791-B1020-)	1		
1111 - 1507	K3VE..F651		O/S 0.125		11792-BZ010-	2		
				#	(11792-B1020-)	1		
1111 - 1507	EJVE..F650		O/S 0.125		11792-BZ020-	2		
1111 - 1507	K3VE..F651		O/S 0.25		11793-BZ010-	2		
				#	(11793-B1020-)	1		
1111 - 1507	EJVE..F650		O/S 0.25		11793-BZ020-	2		
1507 - 1607	EJVE..F650		STD		11791-BZ070-	2		
1507 - 1607	EJVE..F650		O/S 0.125		11792-BZ020-	2		
1507 - 1607	EJVE..F650		O/S 0.25		11793-BZ020-	2		
1507 - 1901	1NRVE..F653		STD		11791-B0010-	2		
1901 -	1NRVE,2NRVE..F65#		STD		11791-B0010-	2		
	+----------+							
	| 13011 | RING SET, PISTON							
	+----------+							
1111 - 1507	K3VE..F651		STD		13011-BZ010-	1		
1111 - 1507	EJVE..F650		STD		13011-BZ070-	1		
1111 - 1507	EJVE..F650		O/S 0.25		13012-BZ020-	1		
1111 - 1507	K3VE..F651		O/S 0.50		13013-BZ030-	1		
1111 - 1507	EJVE..F650		O/S 0.50		13013-BZ060-	1		

FIG.13-01 CRANKSHAFT & PISTON

PROD_DATE	MODELS	SPEC CODE	DESCRIPTION	R/P	PART NUMBER	QYT	REV_REF FR	REV_REF TO
	+----------+							
	| 13011 | RING SET, PISTON							
	CONTINUED--+							
1507 - 1607	EJVE..F650		STD		13011-BZ070-	1		
1507 - 1607	EJVE..F650		O/S 0.25		13012-BZ020-	1		
1507 - 1607	EJVE..F650		O/S 0.50		13013-BZ060-	1		
1507 - 1901	1NRVE..F653		STD		13011-0Y030-	1		
1901 -	1NRVE,2NRVE..F65#		STD		13011-0Y030-	1		
	+----------+							
	| 13041 | BEARING, CONNECTING ROD							
	+----------+							
1111 - 1507	K3VE..F651				13041-BZ010-	4		
1111 - 1507	EJVE..F650		MARK1		13041-BZ070-01	3		
1111 - 1507	EJVE..F650		MARK2		13041-BZ070-02	3		
1111 - 1507	EJVE..F650		MARK3		13041-BZ070-03	3		
1111 - 1507	EJVE..F650		MARK4		13041-BZ070-04	3		
1111 - 1507	EJVE..F650		MARK5		13041-BZ070-05	3		
1507 - 1607	EJVE..F650		MARK1		13041-BZ070-01	3		
1507 - 1607	EJVE..F650		MARK2		13041-BZ070-02	3		
1507 - 1607	EJVE..F650		MARK3		13041-BZ070-03	3		
1507 - 1607	EJVE..F650		MARK4		13041-BZ070-04	3		
1507 - 1607	EJVE..F650		MARK5		13041-BZ070-05	3		
1507 - 1901	1NRVE..F653		MARK1		13041-0Y040-01	4		
1507 - 1901	1NRVE..F653		MARK2		13041-0Y040-02	4		
1507 - 1901	1NRVE..F653		MARK3		13041-0Y040-03	4		
1901 -	1NRVE,2NRVE..F65#		MARK1		13041-0Y040-01	4		
1901 -	1NRVE,2NRVE..F65#		MARK2		13041-0Y040-02	4		
1901 -	1NRVE,2NRVE..F65#		MARK3		13041-0Y040-03	4		
	+----------+							
	| 13101 | PISTON SUB-ASSY, W/PIN							
	+----------+							
1111 - 1507	EJVE..F650		MARK1		13101-BZ090-01	3		

PROD_DATE	MODELS	SPEC CODE	DESCRIPTION	R/P	PART NUMBER	QYT	REV_REF FR	REV_REF TO
	+----------+							
	| 13101 | PISTON SUB-ASSY, W/PIN							
	CONTINUED--+							
1111 - 1507	EJVE..F650		MARK2		13101-BZ090-02	3		
1111 - 1507	EJVE..F650		MARK3		13101-BZ090-03	3		
1111 - 1507	K3VE..F651		STD		13101-BZ110-	4		
1111 - 1507	EJVE..F650		O/S 0.25		13102-BZ030-	3		
1111 - 1507	K3VE..F651		O/S 0.50		13103-BZ030-	4		
1111 - 1507	EJVE..F650		O/S 0.50		13103-BZ070-	3		
1507 - 1603	1NRVE..F653		STD		13211-0Y010-	4		
1507 - 1607	EJVE..F650		MARK1		13101-BZ090-01	3		
1507 - 1607	EJVE..F650		MARK2		13101-BZ090-02	3		
1507 - 1607	EJVE..F650		MARK3		13101-BZ090-03	3		
1507 - 1607	EJVE..F650		O/S 0.25		13102-BZ030-	3		
1507 - 1607	EJVE..F650		O/S 0.50		13103-BZ070-	3		
1604 - 1901	1NRVE..F653		STD		13211-0Y011-	4		
1901 -	1NRVE..F653		STD		13211-0Y011-	4		
1901 -	2NRVE..F654		STD		13211-0Y061-	4		
	+----------+							
	| 13201 | ROD SUB-ASSY, CONNECTING							
	+----------+							
1111 - 1507	K3VE..F651				13201-BZ010-	4		
1111 - 1507	EJVE..F650				13201-BZ070-	3		
1507 - 1607	EJVE..F650				13201-BZ070-	3		
1507 - 1901	1NRVE..F653				13201-B9090-	4		
1901 -	1NRVE..F653				13201-B9090-	4		
1901 -	2NRVE..F654				13201-B9095-	4		
	+----------+							
	| 13202 | BEARING SET, CONNECTING ROD							
	+----------+							
1111 - 1507	EJVE..F650		U/S 0.25		13204-B2010-	1		
1111 - 1507	K3VE..F651		U/S 0.25		13204-BZ010-	1		

FIG.13-01 CRANKSHAFT & PISTON

PROD_DATE	MODELS	SPEC CODE	DESCRIPTION	R/P	PART NUMBER	QYT	REV_REF FR	REV_REF TO
	+----------+							
	| 13202 | BEARING SET, CONNECTING ROD							
	CONTINUED--+							
1507 - 1607	EJVE..F650		U/S 0.25		13204-B2010-	1		
	+----------+							
	| 13251 | PIN, PISTON							
	+----------+							
1507 - 1901	1NRVE..F653				13251-0Y030-	4		
1901 -	1NRVE,2NRVE..F65#				13251-0Y030-	4		
	+----------+							
	| 13265 | BOLT, CONNECTING ROD							
	+----------+							
1111 - 1507	EJVE..F650				13265-87202-	6		
1111 - 1507	K3VE..F651				13265-97401-	8		
1507 - 1607	EJVE..F650				13265-87202-	6		
1507 - 1901	1NRVE..F653				13265-21020-	8		
1901 - 1912	1NRVE,2NRVE..F65#				13265-21020-	8		
2001 -	1NRVE,2NRVE..F65#				13265-0Y020-	8		
	+----------+							
	| 13265A | NUT, HEXAGON(FOR CONNECTING ROD BOLT)							
	+----------+							
1111 - 1507	EJVE..F650				90041-70291-	6		
1507 - 1607	EJVE..F650				90041-70291-	6		
	+----------+							
	| 13405 | FLYWHEEL SUB-ASSY							
	+----------+							
1111 - 1507	EJVE..F650				13405-BZ030-	1		
1111 - 1507	K3VE..F651..5F				13405-BZ080-	1		
1507 - 1607	EJVE..F650				13405-BZ031-	1		
1507 - 1901	1NRVE..F653..5F				13405-BZ150-	1		
1901 -	1NRVE,2NRVE..F65#..5F				13405-BZ150-	1		
	+----------+							
	| 13405A | PIN, STRAIGHT(FOR FLYWHEEL)							
	+----------+							
1111 - 1507	EJVE..F650		L=20,OD=8		90042-50152-	3		
1111 - 1507	K3VE..F651..5F		L=20,OD=8		90042-50196-	3		

PROD_DATE	MODELS	SPEC CODE	DESCRIPTION	R/P	PART NUMBER	QYT	REV_REF FR	REV_REF TO
	+----------+							
	| 13405A | PIN, STRAIGHT(FOR FLYWHEEL)							
	CONTINUED--+							
1507 - 1607	EJVE..F650		L=20,OD=8		90042-50152-	3		
	+----------+							
	| 13405C | SPACER, NO.1(FOR FLYWHEEL)							
	+----------+							
1111 - 1507	EJVE..F650				13457-97201-	1		
1507 - 1607	EJVE..F650				13457-97201-	1		
	+----------+							
	| 13405J | BOLT(FOR FLYWHEEL)							
	+----------+							
1111 - 1507	EJVE..F650				90041-05032-	6		
1111 - 1507	K3VE..F651..5F				90041-05395-	6		
1507 - 1607	EJVE..F650				90041-05032-	6		
	+----------+							
	| 13411 | CRANKSHAFT							
	+----------+							
1111 - 1507	EJVE..F650				13401-87Z21-	1		
1111 - 1507	K3VE..F651				13411-97401-	1		
1507 - 1607	EJVE..F650				13401-87Z21-	1		
1507 - 1901	1NRVE..F653				13401-BZ040-	1		
1901 -	1NRVE..F653				13401-BZ040-	1		
1901 -	2NRVE..F654				13401-BZ100-	1		
1901 -	2NRVE..F654		#		13401-BZ100-	1		
	+----------+							
	| 13411C | PIN, STRAIGHT(FOR CRANKSHAFT)							
	+----------+							
1111 - 1507	EJVE..F650				90042-54027-	1		
1507 - 1607	EJVE..F650				90042-54027-	1		
1507 - 1901	1NRVE..F653..5F				9004A-25035-	3		
1901 -	1NRVE,2NRVE..F65#..5F				9004A-25035-	3		
	+----------+							
	| 13453 | GEAR, FLYWHEEL RING							
	+----------+							
1111 - 1507	K3VE..F651..5F				13453-87Z03-	1		

FIG.13-01 CRANKSHAFT & PISTON

PROD_DATE	MODELS	SPEC CODE	DESCRIPTION	R/P	PART NUMBER	QYT	REV_REF FR	REV_REF TO
	+----------+							
	| 13453 | GEAR, FLYWHEEL RING							
	CONTINUED--+							
1111 - 1507	EJVE..F650				13453-BZ040-	1		
1507 - 1607	EJVE..F650				13453-BZ040-	1		
1507 - 1901	1NRVE..F653..5F				13453-87Z03-	1		
1901 -	1NRVE,2NRVE..F65#..5F				13453-87Z03-	1		
	+----------+							
	| 13457 | RING, FLYWHEEL SPACER							
	+----------+							
1111 - 1507	K3VE..F651..5F				13457-97401-	1		
	+----------+							
	| 13471 | PULLEY, CRANKSHAFT							
	+----------+							
1111 - 1507	EJVE..F650				13470-87Z03-	1		
1111 - 1507	K3VE..F651				13470-BZ011-	1		
1507 - 1607	EJVE..F650				13470-87Z03-	1		
1507 - 1901	1NRVE..F653				13470-BZ070-	1		
1901 -	1NRVE,2NRVE..F65#				13470-BZ070-	1		
	+----------+							
	| 13471A | KEY, CRANKSHAFT(FOR CRANKSHAFT PULLEY SET							
	+----------+)							
1111 - 1507	EJVE..F650				90042-80030-	1		
1507 - 1607	EJVE..F650				90042-80030-	1		
	+----------+							
	| 13471C | BOLT(FOR CRANKSHAFT PULLEY SET)							
	+----------+							
1111 - 1507	EJVE..F650				90041-05331-	1		
1111 - 1507	K3VE..F651				90041-05445-	1		
1507 - 1607	EJVE..F650				90041-05331-	1		
1507 - 1611	1NRVE..F653				90119-T0529-	1		
1612 - 1901	1NRVE..F653				90119-T0444-	1		
				#	(90119-14106-)	1		
1901 -	1NRVE,2NRVE..F65#				90119-T0444-	1		
				#	(90119-14106-)	1		

PROD_DATE	MODELS	SPEC CODE	DESCRIPTION	R/P	PART NUMBER	QYT	REV_REF FR	REV_REF TO
	+----------+							
	| 13482 |		FLANGE, CRANKSHAFT TIMING BELT PULLEY					
	+----------+							
1111 - 1507	EJVE..F650				13482-87Z01-	1		
1507 - 1607	EJVE..F650				13482-87Z01-	1		
	+----------+							
	| 13521 |		GEAR OR SPROCKET, CRANKSHAFT TIMING					
	+----------+							
1111 - 1507	K3VE..F651				13521-97401-	1		
1507 - 1901	1NRVE..F653				13521-0Y040-	1		
1901 -	1NRVE,2NRVE..F65#				13521-0Y040-	1		
	+----------+							
	| 13521A |		KEY(FOR CRANKSHAFT TIMING GEAR)					
	+----------+							
1111 - 1507	K3VE..F651				90042-80034-	1		
1507 - 1901	1NRVE..F653				90280-04001-	1		
1901 -	1NRVE,2NRVE..F65#				90280-04001-	1		
	+----------+							
	| 13521P |		PULLEY, CRANKSHAFT TIMING					
	+----------+							
1111 - 1507	EJVE..F650				13521-BZ010-	1		
1507 - 1607	EJVE..F650				13521-BZ010-	1		
	+----------+							
	| 19315 |		PLATE, CRANK ANGLE SENSOR, NO.1					
	+----------+							
1111 - 1507	K3VE..F651				19315-BZ010-	1		
				#	(19315-B0010-)	1		

(1111-1507)K3VE

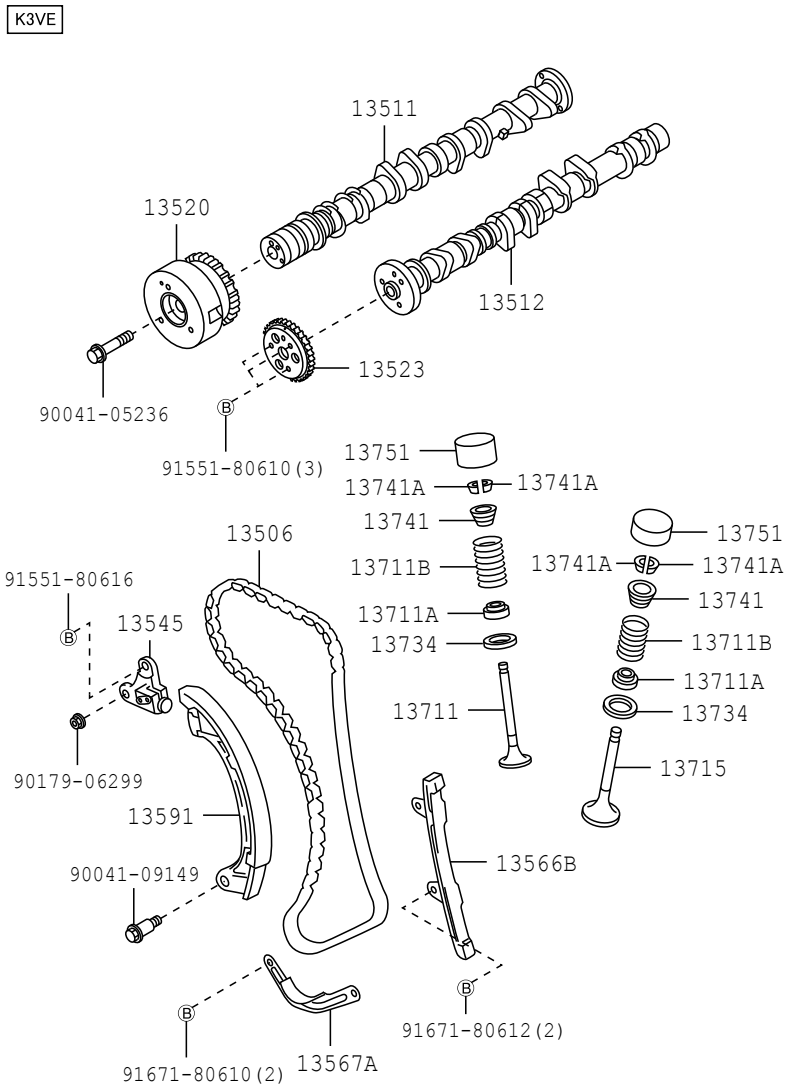

(1111-1607)EJVE

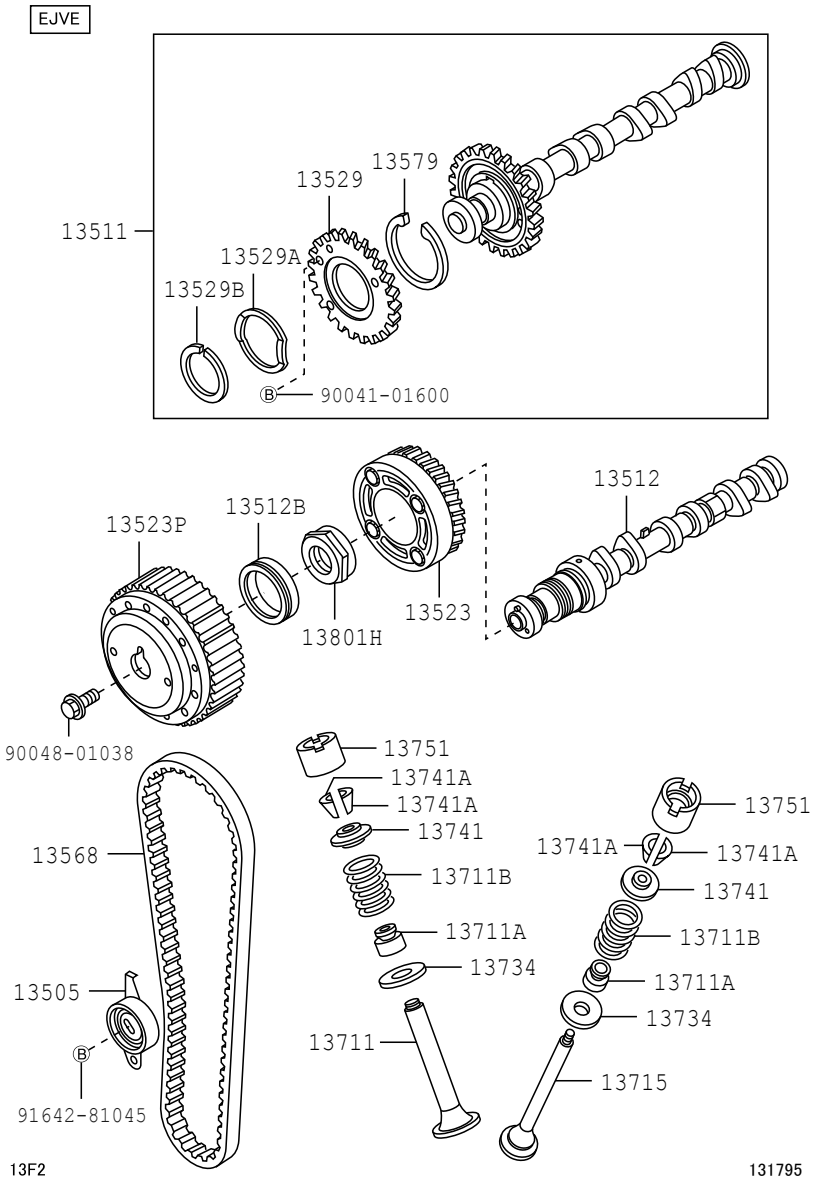

(1507-)1NRVE,2NRVE

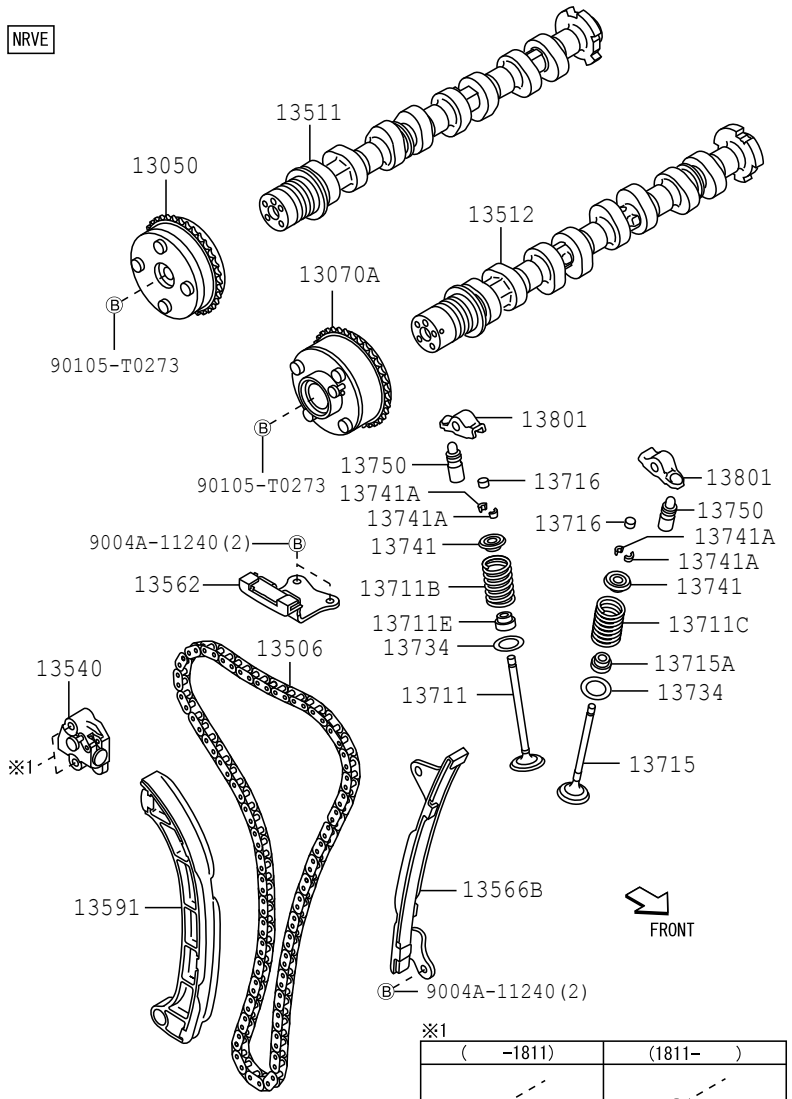

※1

(-1811)	(1811-)
N 94188-00641(2)	B 90105-T0085(2)

13F2

132292-C

PROD_DATE	MODELS	SPEC CODE	DESCRIPTION	R/P	PART NUMBER	QYT	REV_REF FR	REV_REF TO
	13050	GEAR ASSY, CAMSHAFT TIMING						
1507 - 1901	1NRVE..F653				13050-0Y020-	1		
1901 -	1NRVE,2NRVE..F65#				13050-0Y020-	1		
	13070A	GEAR ASSY, CAMSHAFT TIMING EXHAUST						
1507 - 1901	1NRVE..F653				13070-0Y020-	1		
1901 -	1NRVE,2NRVE..F65#				13070-0Y020-	1		
	13505	IDLER SUB-ASSY, TIMING BELT, NO.1						
1111 - 1507	EJVE..F650				13505-87Z01-	1		
1507 - 1607	EJVE..F650				13505-87Z01-	1		
	13506	CHAIN SUB-ASSY						
1111 - 1507	K3VE..F651				13506-97401-	1		
1507 - 1901	1NRVE..F653				13506-0Y040-	1		
1901 -	1NRVE,2NRVE..F65#				13506-0Y040-	1		
	13511	CAMSHAFT						
1111 - 1507	K3VE..F651		JAPAN SOURCED PARTS		13501-97401-	1		
1111 - 1507	K3VE..F651		LOCAL SOURCED PARTS		13501-BZ010-	1		
1111 - 1507	EJVE..F650				13510-B0030-	1		
1507 - 1607	EJVE..F650				13510-B0030-	1		
1507 - 1901	1NRVE..F653				13501-BZ040-	1		
1901 -	1NRVE,2NRVE..F65#				13501-BZ040-	1		
	13512	CAMSHAFT, NO.2						
1111 - 1507	EJVE..F650				13502-97204-	1		
1111 - 1507	K3VE..F651		JAPAN SOURCED PARTS		13502-97401-	1		
1111 - 1507	K3VE..F651		LOCAL SOURCED PARTS		13502-BZ010- # (13502-97401-)	1 1		

PROD_DATE	MODELS	SPEC CODE	DESCRIPTION	R/P	PART NUMBER	QYT	REV_REF FR	REV_REF TO
	+----------+							
	| 13512 | CAMSHAFT, NO							
	CONTINUED--+ .2							
1507 - 1607	EJVE..F650				13502-97204-	1		
1507 - 1901	1NRVE..F653				13502-BZ030-	1		
1901 -	1NRVE,2NRVE..F65#				13502-BZ030-	1		
	+----------+							
	| 13512B | SEAL, TYPE T OIL(FOR CAMSHAFT NO.2)							
	+----------+							
1111 - 1507	EJVE..F650				9004A-31022-	1		
1507 - 1607	EJVE..F650				9004A-31022-	1		
	+----------+							
	| 13520 | SPROCKET ASSY, CAMSHAFT TIMING							
	+----------+							
1111 - 1507	K3VE..F651				13520-BZ050-	1		
	+----------+							
	| 13523 | GEAR OR SPROCKET, CAMSHAFT TIMING							
	+----------+							
1111 - 1507	K3VE..F651				13523-97401-	1		
1111 - 1507	EJVE..F650				13800-97205-	1		
1507 - 1607	EJVE..F650				13800-97205-	1		
	+----------+							
	| 13523P | PULLEY, CAMSHAFT TIMING							
	+----------+							
1111 - 1507	EJVE..F650				13523-BZ020-	1		
1507 - 1607	EJVE..F650				13523-BZ020-	1		
	+----------+							
	| 13529 | GEAR, CAMSHAFT SUB							
	+----------+							
1111 - 1507	EJVE..F650				13509-87203-	1		
1507 - 1607	EJVE..F650				13509-87203-	1		
	+----------+							
	| 13529A | WASHER, WAVE(FOR CAMSHAFT SUB GEAR)							
	+----------+							
1111 - 1507	EJVE..F650				90042-06064-	1		
1507 - 1607	EJVE..F650				90042-06064-	1		

FIG.13-02 CAMSHAFT & VALVE

PROD_DATE	MODELS	SPEC CODE	DESCRIPTION	R/P	PART NUMBER	QYT	REV_REF FR	REV_REF TO
	+----------+							
	| 13529B | RING, SHAFT SNAP(FOR CAMSHAFT SUB GEAR)							
	+----------+							
1111 - 1507	EJVE..F650				90045-20292-	1		
1507 - 1607	EJVE..F650				90045-20292-	1		
	+----------+							
	| 13540 | TENSIONER ASSY, CHAIN, NO.1							
	+----------+							
1507 - 1901	1NRVE..F653				13540-0Y010-	1		
1901 -	1NRVE,2NRVE..F65#				13540-0Y010-	1		
	+----------+							
	| 13545 | PLUNGER, CHAIN TENSIONER							
	+----------+							
1111 - 1311	K3VE..F651				13545-97401-	1		
1312 - 1507	K3VE..F651				13545-BZ040-	1		
	+----------+							
	| 13562 | DAMPER, CHAIN VIBRATION, NO.2							
	+----------+							
1507 - 1901	1NRVE..F653				13562-0Y020-	1		
1901 -	1NRVE,2NRVE..F65#				13562-0Y020-	1		
	+----------+							
	| 13566B | GUIDE, TIMING CHAIN							
	+----------+							
1111 - 1311	K3VE..F651				13566-97401-	1		
1312 - 1507	K3VE..F651				13566-BZ060-	1		
1507 - 1901	1NRVE..F653				13566-0Y010-	1		
1901 -	1NRVE,2NRVE..F65#				13566-0Y010-	1		
	+----------+							
	| 13567A | GUIDE, TIMING CHAIN, NO.2							
	+----------+							
1111 - 1507	K3VE..F651				13567-BZ010-	1		
	+----------+							
	| 13568 | BELT, TIMING							
	+----------+							
1111 - 1507	EJVE..F650				13568-B9140-	1		
1507 - 1607	EJVE..F650				13568-B9140-	1		

PROD_DATE	MODELS	SPEC CODE	DESCRIPTION	R/P	PART NUMBER	QYT	REV_REF FR	REV_REF TO
	13579		WASHER, CAMSHAFT TIMING GEAR BOLT					
1111 - 1507	EJVE..F650				13579-87201-	1		
1507 - 1607	EJVE..F650				13579-87201-	1		
	13591		ARM, TIMING CHAIN TENSION					
1111 - 1311	K3VE..F651				13591-97401-	1		
1312 - 1507	K3VE..F651				13591-BZ060-	1		
1507 - 1901	1NRVE..F653				13591-0Y010-	1		
1901 -	1NRVE,2NRVE..F65#				13591-0Y010-	1		
	13711		VALVE, INTAKE					
1111 - 1507	EJVE..F650				13711-BZ050-	6		
1111 - 1507	K3VE..F651				13711-BZ060-	8		
				#	(13711-B1020-)	1		
1507 - 1607	EJVE..F650				13711-BZ050-	6		
1507 - 1901	1NRVE..F653				13711-0Y020-	8		
1901 -	1NRVE,2NRVE..F65#				13711-0Y020-	8		
	13711A		SEAL OR RING, O(FOR VALVE STEM OIL)					
1111 - 1507	EJVE..F650				9004A-31023-	12		
1111 - 1507	K3VE..F651				9004A-31023-	16		
1507 - 1607	EJVE..F650				9004A-31023-	12		
	13711B		SPRING, COMPRESSION(FOR INNER)					
1111 - 1507	EJVE..F650				9004A-50080-	12		
1111 - 1507	K3VE..F651				9004A-50087-	16		
1507 - 1607	EJVE..F650				9004A-50080-	12		
1507 - 1901	1NRVE..F653				90501-T0045-	8		
1901 -	1NRVE,2NRVE..F65#				90501-T0045-	8		

FIG.13-02 CAMSHAFT & VALVE

PROD_DATE	MODELS	SPEC CODE	DESCRIPTION	R/P	PART NUMBER	QYT	REV_REF FR	REV_REF TO
	13711C		SPRING, COMPRESSION(FOR OUTER)					
1507 - 1901	1NRVE..F653				90501-T0045-	8		
1901 -	1NRVE,2NRVE..F65#				90501-T0045-	8		
	13711E		SEAL, INTAKE VALVE STEM OIL					
1507 - 1901	1NRVE..F653				90913-T2004-	8		
1901 -	1NRVE,2NRVE..F65#				90913-T2004-	8		
	13715		VALVE, EXHAUST					
1111 - 1507	EJVE..F650				13715-BZ050-	6		
1111 - 1507	K3VE..F651				13715-BZ060-	8		
				#	(13715-B1020-)	1		
1507 - 1607	EJVE..F650				13715-BZ050-	6		
1507 - 1901	1NRVE..F653				13715-0Y020-	8		
1901 -	1NRVE,2NRVE..F65#				13715-0Y020-	8		
	13715A		SEAL, EXHAUST VALVE STEM OIL					
1507 - 1901	1NRVE..F653				90913-T2005-	8		
1901 -	1NRVE,2NRVE..F65#				90913-T2005-	8		
	13716		CAP, VALVE STEM					
1507 - 1901	1NRVE..F653				13716-0C020-	16		
1901 - 1912	1NRVE,2NRVE..F65#				13716-0C020-	16		
2001 -	1NRVE,2NRVE..F65#				13716-0C030-	16		
	13734		SEAT, VALVE SPRING					
1111 - 1507	EJVE..F650				13734-87206-	12		
1111 - 1507	K3VE..F651				13734-87206-	16		
1507 - 1607	EJVE..F650				13734-87206-	12		
1507 - 1901	1NRVE..F653				13734-0C010-	16		

PROD_DATE	MODELS	SPEC CODE	DESCRIPTION	R/P	PART NUMBER	QYT	REV_REF FR	REV_REF TO
	+----------+							
	| 13734 | SEAT, VALVE SPRING							
	CONTINUED--+							
1901 -	1NRVE,2NRVE..F65#				13734-0C010-	16		
	+----------+							
	| 13741 | RETAINER, VALVE SPRING							
	+----------+							
1111 - 1507	EJVE..F650				13741-97202-	12		
1111 - 1507	K3VE..F651				13741-97401-	16		
1507 - 1607	EJVE..F650				13741-97202-	12		
1507 - 1901	1NRVE..F653				13741-0Y010-	16		
				#	(13741-36010-)	1		
1901 -	1NRVE,2NRVE..F65#				13741-0Y010-	16		
				#	(13741-36010-)	1		
	+----------+							
	| 13741A | LOCK, VALVE SPRING RETAINER							
	+----------+							
1111 - 1507	EJVE..F650				90048-13013-	24		
1111 - 1507	K3VE..F651				90048-13013-	32		
1507 - 1607	EJVE..F650				90048-13013-	24		
1507 - 1901	1NRVE..F653				90913-03028-	32		
1901 -	1NRVE,2NRVE..F65#				90913-03028-	32		
	+----------+							
	| 13750 | ADJUSTER ASSY, VALVE LASH							
	+----------+							
1507 - 1901	1NRVE..F653				13750-0C040-	16		
1901 -	1NRVE,2NRVE..F65#				13750-0C040-	16		
	+----------+							
	| 13751 | LIFTER, VALV							
	+----------+ E							
1111 - 1507	K3VE,EJVE..F65#		T=5.12		13751-BZ030-	16		
				#	(13751-B6030-)	1		
1111 - 1507	K3VE,EJVE..F65#		T=5.14		13751-BZ040-	16		
				#	(13751-B6040-)	1		
1111 - 1507	K3VE,EJVE..F65#		T=5.16		13751-BZ050-	16		
				#	(13751-B6050-)	1		
1111 - 1507	K3VE,EJVE..F65#		T=5.18		13751-BZ060-	16		
				#	(13751-B6060-)	1		

FIG.13-02 CAMSHAFT & VALVE

PROD_DATE	MODELS	SPEC CODE	DESCRIPTION	R/P	PART NUMBER	QYT	REV_REF FR	REV_REF TO
	+----------+							
	| 13751 | LIFTER, VALV							
	CONTINUED--+ E							
1111 - 1507	K3VE,EJVE..F65#		T=5.20		13751-BZ070-	16		
				#	(13751-B6070-)	1		
1111 - 1507	K3VE,EJVE..F65#		T=5.22		13751-BZ080-	16		
				#	(13751-B6080-)	1		
1111 - 1507	K3VE,EJVE..F65#		T=5.24		13751-BZ090-	16		
				#	(13751-B6090-)	1		
1111 - 1507	K3VE,EJVE..F65#		T=5.26		13751-BZ100-	16		
				#	(13751-B6100-)	1		
1111 - 1507	K3VE,EJVE..F65#		T=5.28		13751-BZ110-	16		
				#	(13751-B6110-)	1		
1111 - 1507	K3VE,EJVE..F65#		T=5.30		13751-BZ120-	16		
				#	(13751-B6120-)	1		
1111 - 1507	K3VE,EJVE..F65#		T=5.32		13751-BZ130-	16		
				#	(13751-B6130-)	1		
1111 - 1507	K3VE,EJVE..F65#		T=5.34		13751-BZ140-	16		
				#	(13751-B6140-)	1		
1111 - 1507	K3VE,EJVE..F65#		T=5.36		13751-BZ150-	16		
				#	(13751-B6150-)	1		
1111 - 1507	K3VE,EJVE..F65#		T=5.38		13751-BZ160-	16		
				#	(13751-B6160-)	1		
1111 - 1507	K3VE,EJVE..F65#		T=5.40		13751-BZ170-	16		
				#	(13751-B6170-)	1		
1111 - 1507	K3VE,EJVE..F65#		T=5.42		13751-BZ180-	16		
				#	(13751-B6180-)	1		
1111 - 1507	K3VE,EJVE..F65#		T=5.44		13751-BZ190-	16		
				#	(13751-B6190-)	1		
1111 - 1507	K3VE,EJVE..F65#		T=5.46		13751-BZ200-	16		
				#	(13751-B6200-)	1		
1111 - 1507	K3VE,EJVE..F65#		T=5.48		13751-BZ210-	16		
				#	(13751-B6210-)	1		
1111 - 1507	K3VE,EJVE..F65#		T=5.50		13751-BZ220-	16		
				#	(13751-B6220-)	1		
1111 - 1507	K3VE,EJVE..F65#		T=5.52		13751-BZ230-	16		
				#	(13751-B6230-)	1		

PROD_DATE	MODELS	SPEC CODE	DESCRIPTION	R/P	PART NUMBER	QYT	REV_REF FR	REV_REF TO
	+----------+ | 13751 | LIFTER, VALV CONTINUED--+ E							
1111 - 1507	K3VE,EJVE..F65#		T=5.54		13751-BZ240- # (13751-B6240-)	16 1		
1111 - 1507	K3VE,EJVE..F65#		T=5.56		13751-BZ250- # (13751-B6250-)	16 1		
1111 - 1507	K3VE,EJVE..F65#		T=5.58		13751-BZ260- # (13751-B6260-)	16 1		
1111 - 1507	K3VE,EJVE..F65#		T=5.60		13751-BZ270- # (13751-B6270-)	16 1		
1111 - 1507	K3VE,EJVE..F65#		T=5.62		13751-BZ280- # (13751-B6280-)	16 1		
1111 - 1507	K3VE,EJVE..F65#		T=5.64		13751-BZ290- # (13751-B6290-)	16 1		
1111 - 1507	K3VE,EJVE..F65#		T=5.66		13751-BZ300- # (13751-B6300-)	16 1		
1111 - 1507	K3VE,EJVE..F65#		T=5.68		13751-BZ310- # (13751-B6310-)	16 1		
1507 - 1512	EJVE..F650		T=5.12		13751-BZ030- # (13751-B6030-)	16 1		
1507 - 1512	EJVE..F650		T=5.14		13751-BZ040- # (13751-B6040-)	16 1		
1507 - 1512	EJVE..F650		T=5.16		13751-BZ050- # (13751-B6050-)	16 1		
1507 - 1512	EJVE..F650		T=5.18		13751-BZ060- # (13751-B6060-)	16 1		
1507 - 1512	EJVE..F650		T=5.20		13751-BZ070- # (13751-B6070-)	16 1		
1507 - 1512	EJVE..F650		T=5.22		13751-BZ080- # (13751-B6080-)	16 1		
1507 - 1512	EJVE..F650		T=5.24		13751-BZ090- # (13751-B6090-)	16 1		
1507 - 1512	EJVE..F650		T=5.26		13751-BZ100- # (13751-B6100-)	16 1		
1507 - 1512	EJVE..F650		T=5.28		13751-BZ110- # (13751-B6110-)	16 1		

FIG.13-02 CAMSHAFT & VALVE

PROD_DATE	MODELS	SPEC CODE	DESCRIPTION	R/P	PART NUMBER	QYT	REV_REF FR	REV_REF TO
	+----------+ | 13751 | LIFTER, VALV CONTINUED--+ E							
1507 - 1512	EJVE..F650		T=5.30		13751-BZ120- # (13751-B6120-)	16 1		
1507 - 1512	EJVE..F650		T=5.32		13751-BZ130- # (13751-B6130-)	16 1		
1507 - 1512	EJVE..F650		T=5.34		13751-BZ140- # (13751-B6140-)	16 1		
1507 - 1512	EJVE..F650		T=5.36		13751-BZ150- # (13751-B6150-)	16 1		
1507 - 1512	EJVE..F650		T=5.38		13751-BZ160- # (13751-B6160-)	16 1		
1507 - 1512	EJVE..F650		T=5.40		13751-BZ170- # (13751-B6170-)	16 1		
1507 - 1512	EJVE..F650		T=5.42		13751-BZ180- # (13751-B6180-)	16 1		
1507 - 1512	EJVE..F650		T=5.44		13751-BZ190- # (13751-B6190-)	16 1		
1507 - 1512	EJVE..F650		T=5.46		13751-BZ200- # (13751-B6200-)	16 1		
1507 - 1512	EJVE..F650		T=5.48		13751-BZ210- # (13751-B6210-)	16 1		
1507 - 1512	EJVE..F650		T=5.50		13751-BZ220- # (13751-B6220-)	16 1		
1507 - 1512	EJVE..F650		T=5.52		13751-BZ230- # (13751-B6230-)	16 1		
1507 - 1512	EJVE..F650		T=5.54		13751-BZ240- # (13751-B6240-)	16 1		
1507 - 1512	EJVE..F650		T=5.56		13751-BZ250- # (13751-B6250-)	16 1		
1507 - 1512	EJVE..F650		T=5.58		13751-BZ260- # (13751-B6260-)	16 1		
1507 - 1512	EJVE..F650		T=5.60		13751-BZ270- # (13751-B6270-)	16 1		
1507 - 1512	EJVE..F650		T=5.62		13751-BZ280- # (13751-B6280-)	16 1		

PROD_DATE	MODELS	SPEC CODE	DESCRIPTION	R/P	PART NUMBER	QYT	REV_REF FR	REV_REF TO
	+----------+							
	| 13751 | LIFTER, VALV							
	CONTINUED--+ E							
1507 - 1512	EJVE..F650		T=5.64		13751-BZ290-	16		
				#	(13751-B6290-)	1		
1507 - 1512	EJVE..F650		T=5.66		13751-BZ300-	16		
				#	(13751-B6300-)	1		
1507 - 1512	EJVE..F650		T=5.68		13751-BZ310-	16		
				#	(13751-B6310-)	1		
1601 - 1607	EJVE..F650		T=5.12		13751-BZ340-	16		
				#	(13751-B6030-)	1		
1601 - 1607	EJVE..F650		T=5.14		13751-BZ350-	16		
				#	(13751-B6040-)	1		
1601 - 1607	EJVE..F650		T=5.16		13751-BZ360-	16		
				#	(13751-B6050-)	1		
1601 - 1607	EJVE..F650		T=5.18		13751-BZ370-	16		
				#	(13751-B6060-)	1		
1601 - 1607	EJVE..F650		T=5.20		13751-BZ380-	16		
				#	(13751-B6070-)	1		
1601 - 1607	EJVE..F650		T=5.22		13751-BZ390-	16		
				#	(13751-B6080-)	1		
1601 - 1607	EJVE..F650		T=5.24		13751-BZ400-	16		
				#	(13751-B6090-)	1		
1601 - 1607	EJVE..F650		T=5.26		13751-BZ410-	16		
				#	(13751-B6100-)	1		
1601 - 1607	EJVE..F650		T=5.28		13751-BZ420-	16		
				#	(13751-B6110-)	1		
1601 - 1607	EJVE..F650		T=5.30		13751-BZ430-	16		
				#	(13751-B6120-)	1		
1601 - 1607	EJVE..F650		T=5.32		13751-BZ440-	16		
				#	(13751-B6130-)	1		
1601 - 1607	EJVE..F650		T=5.34		13751-BZ450-	16		
				#	(13751-B6140-)	1		
1601 - 1607	EJVE..F650		T=5.36		13751-BZ460-	16		
				#	(13751-B6150-)	1		
1601 - 1607	EJVE..F650		T=5.38		13751-BZ470-	16		
				#	(13751-B6160-)	1		

FIG.13-02 CAMSHAFT & VALVE

PROD_DATE	MODELS	SPEC CODE	DESCRIPTION	R/P	PART NUMBER	QYT	REV_REF FR	REV_REF TO
	+----------+							
	| 13751 | LIFTER, VALV							
	CONTINUED--+ E							
1601 - 1607	EJVE..F650		T=5.40		13751-BZ480-	16		
				#	(13751-B6170-)	1		
1601 - 1607	EJVE..F650		T=5.42		13751-BZ490-	16		
				#	(13751-B6180-)	1		
1601 - 1607	EJVE..F650		T=5.44		13751-BZ500-	16		
				#	(13751-B6190-)	1		
1601 - 1607	EJVE..F650		T=5.46		13751-BZ510-	16		
				#	(13751-B6200-)	1		
1601 - 1607	EJVE..F650		T=5.48		13751-BZ520-	16		
				#	(13751-B6210-)	1		
1601 - 1607	EJVE..F650		T=5.50		13751-BZ530-	16		
				#	(13751-B6220-)	1		
1601 - 1607	EJVE..F650		T=5.52		13751-BZ540-	16		
				#	(13751-B6230-)	1		
1601 - 1607	EJVE..F650		T=5.54		13751-BZ550-	16		
				#	(13751-B6240-)	1		
1601 - 1607	EJVE..F650		T=5.56		13751-BZ560-	16		
				#	(13751-B6250-)	1		
1601 - 1607	EJVE..F650		T=5.58		13751-BZ570-	16		
				#	(13751-B6260-)	1		
1601 - 1607	EJVE..F650		T=5.60		13751-BZ580-	16		
				#	(13751-B6270-)	1		
1601 - 1607	EJVE..F650		T=5.62		13751-BZ590-	16		
				#	(13751-B6280-)	1		
1601 - 1607	EJVE..F650		T=5.64		13751-BZ600-	16		
				#	(13751-B6290-)	1		
1601 - 1607	EJVE..F650		T=5.66		13751-BZ610-	16		
				#	(13751-B6300-)	1		
1601 - 1607	EJVE..F650		T=5.68		13751-BZ620-	16		
				#	(13751-B6310-)	1		
	+----------+							
	| 13801 | ARM SUB-ASSY, VALVE ROCKER, NO.1							
	+----------+							
1507 - 1901	1NRVE..F653				13801-0C030-	16		
1901 -	1NRVE,2NRVE..F65#				13801-0C030-	16		

PROD_DATE	MODELS	SPEC CODE	DESCRIPTION	R/P	PART NUMBER	QYT	REV_REF	
							FR	TO
	+----------+ | 13801H | NUT +----------+							
1111 - 1507	EJVE..F650				90041-79305-	1		
1507 - 1607	EJVE..F650				90041-79305-	1		

(1111-1507)K3VE

K3VE

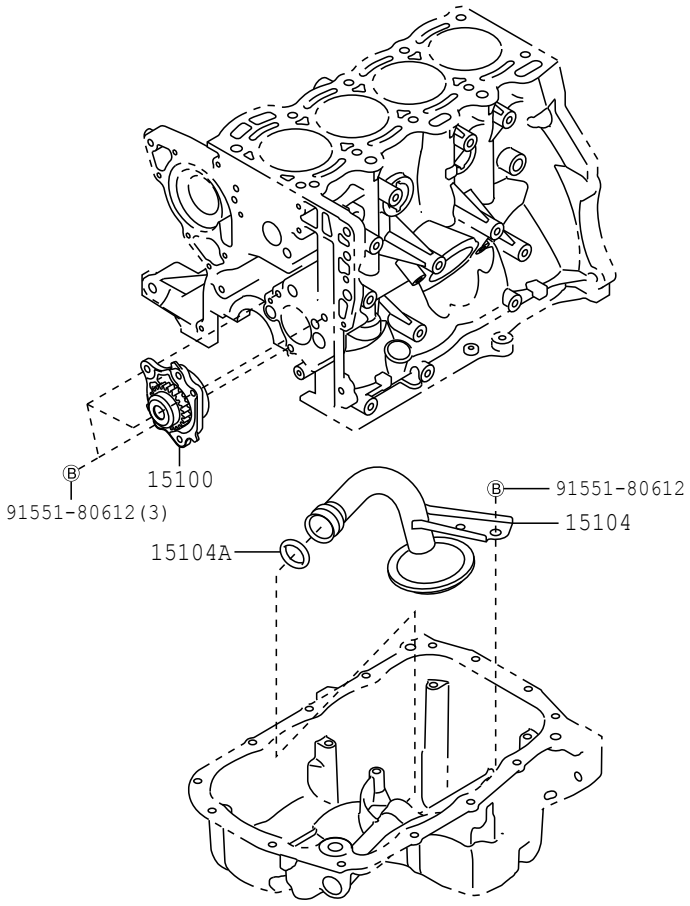

15F1

151905

(1111-1607)EJVE

EJVE

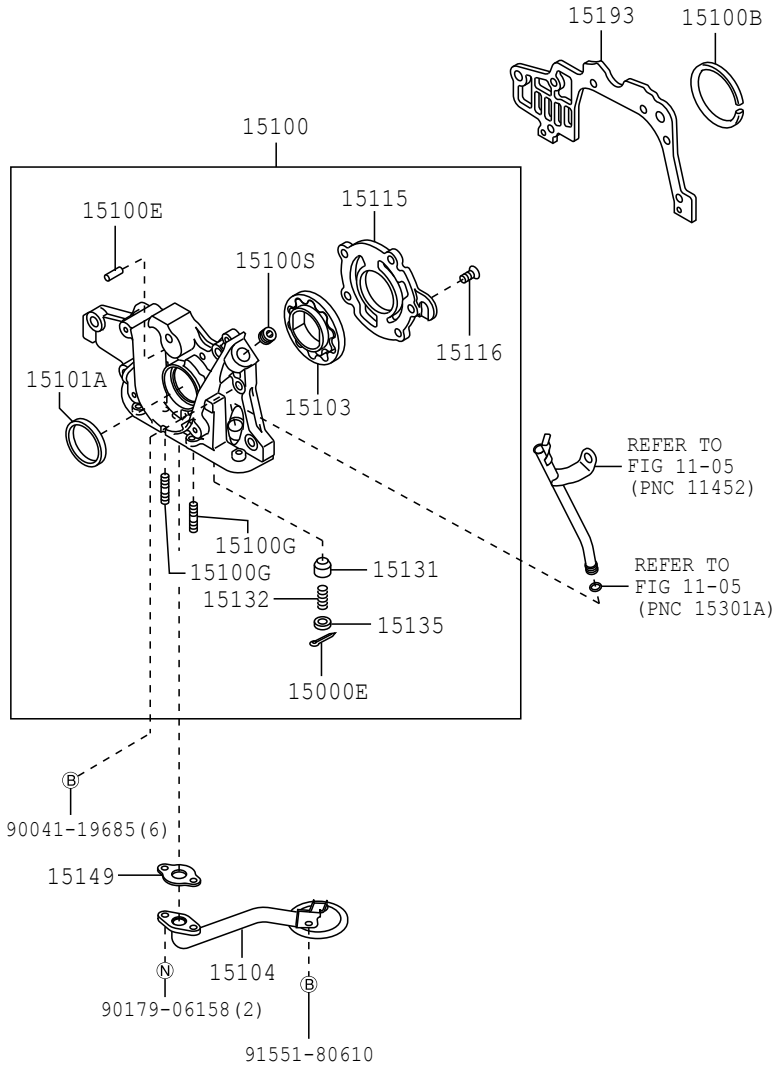

15F1

151906-A

(1507-)1NRVE,2NRVE

NRVE

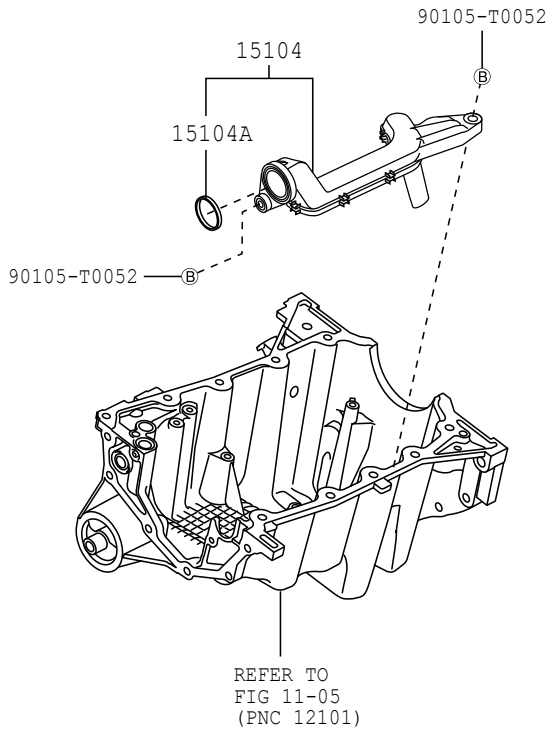

FRONT

15F1

152367

FIG.15-01 ENGINE OIL PUMP

PROD_DATE	MODELS	SPEC CODE	DESCRIPTION	R/P	PART NUMBER	QYT	REV_REF FR	REV_REF TO
	+----------+							
	| 15000E | PIN							
	+----------+							
1111 - 1507	EJVE..F650				95381-02525-	1		
				#	(95381-02525-000)	1		
1507 - 1607	EJVE..F650				95381-02525-	1		
				#	(95381-02525-000)	1		
	+----------+							
	| 15100 | PUMP ASSY, O							
	+----------+ IL							
1111 - 1209	K3VE..F651				15100-97401-	1		
1111 - 1507	EJVE..F650				15100-BZ030-	1		
1210 - 1507	K3VE..F651				15100-BZ070-	1		
1507 - 1607	EJVE..F650				15100-BZ030-	1		
	+----------+							
	| 15100B | RING, O(FOR OIL PUMP)							
	+----------+							
1111 - 1507	EJVE..F650				9004A-30037-	1		
1507 - 1607	EJVE..F650				9004A-30037-	1		
	+----------+							
	| 15100E | PIN, STRAIGHT (FOR OIL PUMP SET)							
	+----------+							
1111 - 1507	EJVE..F650				9004A-25002-	1		
1507 - 1607	EJVE..F650				9004A-25002-	1		
	+----------+							
	| 15100G | BOLT,STUD(FOR OIL PUMP)							
	+----------+							
1111 - 1507	EJVE..F650				9004A-11053-	2		
1507 - 1607	EJVE..F650				9004A-11053-	2		
	+----------+							
	| 15100S | PLUG, TAPER SCREW(FOR OIL PUMP)							
	+----------+							
1111 - 1507	EJVE..F650				9004A-34005-	1		
1507 - 1607	EJVE..F650				9004A-34005-	1		
	+----------+							
	| 15101A | SEAL(FOR CRANKSHAFT)							
	+----------+							
1111 - 1507	EJVE..F650				9004A-31012-	1		
1507 - 1607	EJVE..F650				9004A-31012-	1		

PROD_DATE	MODELS	SPEC CODE	DESCRIPTION	R/P	PART NUMBER	QYT	REV_REF FR	REV_REF TO
	+----------+							
	| 15103 | GEAR SET, OIL PUMP							
	+----------+							
1111 - 1507	EJVE..F650				15103-BZ010-	1		
1507 - 1607	EJVE..F650				15103-BZ010-	1		
	+----------+							
	| 15104 | STRAINER SUB-ASSY, OIL							
	+----------+							
1111 - 1507	K3VE..F651				15140-B0010-	1		
1111 - 1507	EJVE..F650				15140-BZ010-	1		
1507 - 1607	EJVE..F650				15140-BZ010-	1		
1507 - 1901	1NRVE..F653				15104-BZ030-	1		
1901 -	1NRVE,2NRVE..F65#				15104-BZ030-	1		
	+----------+							
	| 15104A | RING, O(FOR OIL STRAINER)							
	+----------+							
1111 - 1507	K3VE..F651				96723-24016-	1		
1507 - 1901	1NRVE..F653				9004A-30056-	1		
1901 -	1NRVE,2NRVE..F65#				9004A-30056-	1		
	+----------+							
	| 15115 | COVER, OIL PUMP							
	+----------+							
1111 - 1507	EJVE..F650				15115-87Z01-	1		
1507 - 1607	EJVE..F650				15115-87Z01-	1		
	+----------+							
	| 15116 | SCREW, OIL CLEANER SET							
	+----------+							
1111 - 1507	EJVE..F650				9004A-15016-	5		
1507 - 1607	EJVE..F650				9004A-15016-	5		
	+----------+							
	| 15131 | VALVE, OIL PUMP RELIEF							
	+----------+							
1111 - 1507	EJVE..F650				15131-87Z01-	1		
1507 - 1607	EJVE..F650				15131-87Z01-	1		
	+----------+							
	| 15132 | SPRING, OIL PUMP RELIEF VALVE							
	+----------+							
1111 - 1507	EJVE..F650				9004A-50088-	1		

PROD_DATE	MODELS	SPEC CODE	DESCRIPTION	R/P	PART NUMBER	QYT	REV_REF FR	REV_REF TO
	+----------+							
	| 15132 | SPRING, OIL PUMP RELIEF VALVE							
	CONTINUED--+							
1507 - 1607	EJVE..F650				9004A-50088-	1		
	+----------+							
	| 15135 | RETAINER, OIL PUMP RELIEF VALVE							
	+----------+							
1111 - 1507	EJVE..F650				15135-BZ010-	1		
1507 - 1607	EJVE..F650				15135-BZ010-	1		
	+----------+							
	| 15149 | GASKET, OIL STRAINER FLANGE							
	+----------+							
1111 - 1507	EJVE..F650				15149-87Z01-	1		
1507 - 1607	EJVE..F650				15149-87Z01-	1		
	+----------+							
	| 15193 | GASKET, OIL PUMP							
	+----------+							
1111 - 1507	EJVE..F650				15197-87Z01-	1		
1507 - 1607	EJVE..F650				15197-87Z01-	1		

FIG. 15-02 OIL FILTER

(1111-1507)K3VE

K3VE

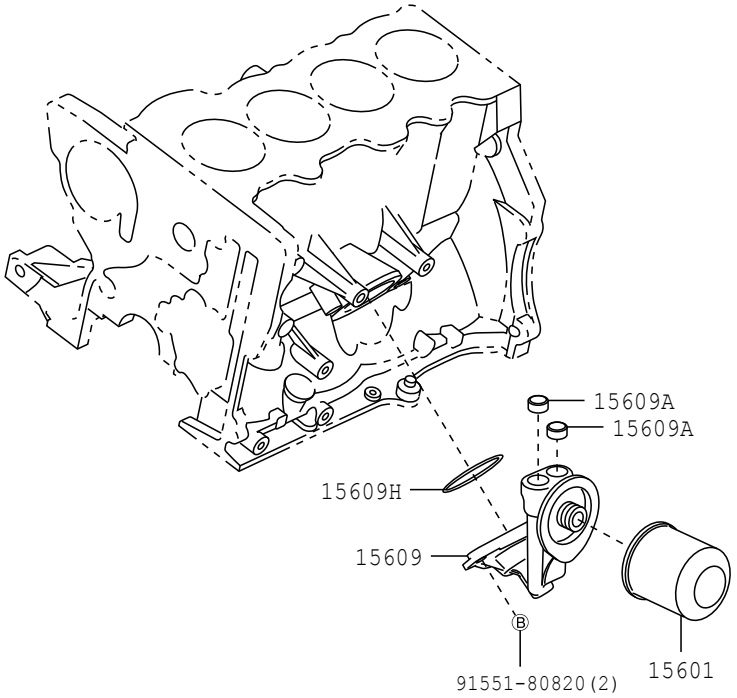

15F2

151908

FIG. 15-02 OIL FILTER

(1111-1607)EJVE

EJVE

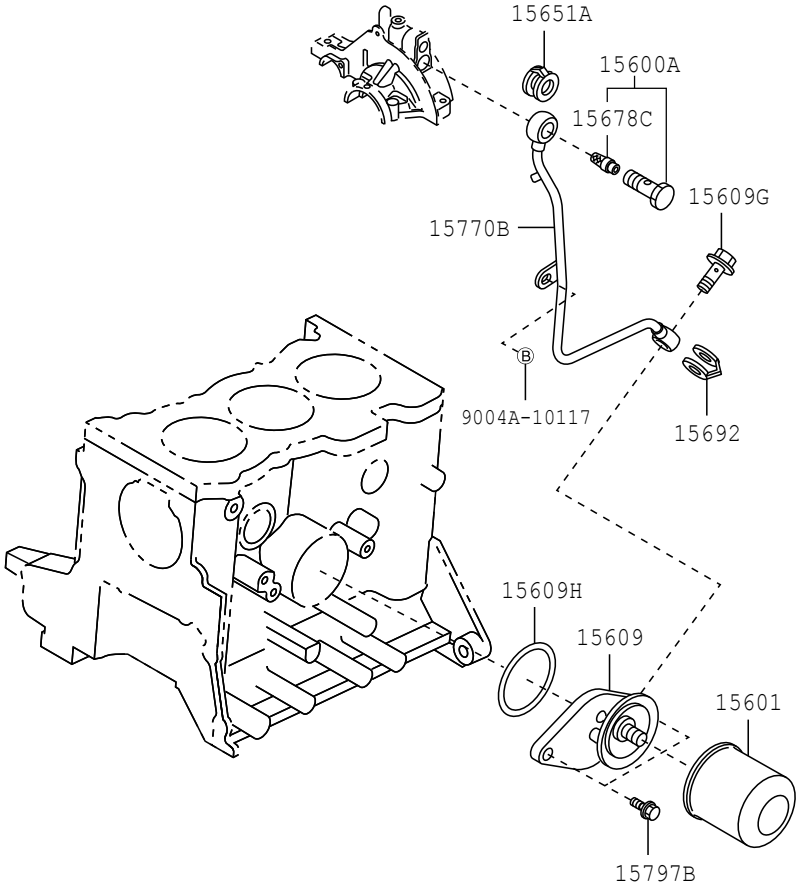

15F2

151909

(1507-)1NRVE,2NRVE

NRVE

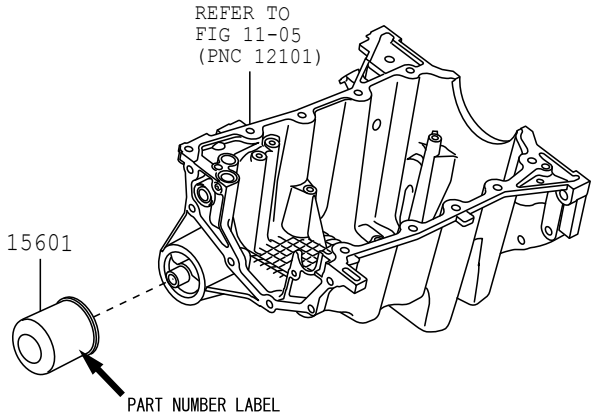

FRONT

15F2

152368-A

FIG.15-02 OIL FILTER

PROD_DATE	MODELS	SPEC CODE	DESCRIPTION	R/P	PART NUMBER	QYT	REV_REF FR	REV_REF TO
	+----------+							
	| 15600A | UNION(FOR OIL FILTER)							
	+----------+							
1111 - 1507	EJVE..F650				44749-97201-	1		
1507 - 1607	EJVE..F650				44749-97201-	1		
	+----------+							
	| 15601 | FILTER SUB-ASSY, OIL							
	+----------+							
1111 - 1507	K3VE,EJVE..F65#				15601-BZ010-	1		
				#	(15601-BZ030-)	1		
1507 - 1607	EJVE..F650				15601-BZ010-	1		
				#	(15601-BZ030-)	1		
1507 - 1901	1NRVE..F653		W/PART NUMBER LABEL		15601-BZ030-	1		
1901 -	1NRVE,2NRVE..F65#		W/PART NUMBER LABEL		15601-BZ030-	1		
	+----------+							
	| 15609 | BRACKET SUB-ASSY, OIL FILTER							
	+----------+							
1111 - 1507	K3VE..F651				15671-BZ010-	1		
1111 - 1507	EJVE..F650				15671-BZ020-	1		
1507 - 1607	EJVE..F650				15671-BZ020-	1		
	+----------+							
	| 15609A | PLUG, TAPER SCREW(FOR OIL FILTER BRACKET)							
	+----------+							
1111 - 1507	K3VE..F651				90043-44019-	2		
	+----------+							
	| 15609G | BOLT, UNION(FOR OIL FILTER BRACKET)							
	+----------+							
1111 - 1507	EJVE..F650				90044-01094-	1		
1507 - 1607	EJVE..F650				90044-01094-	1		
	+----------+							
	| 15609H | RING, O(FOR OIL FILTER BRACKET)							
	+----------+							
1111 - 1407	K3VE,EJVE..F65#				9004A-30011-	1		
				#	(9004A-30057-)	1		
1408 - 1507	K3VE,EJVE..F65#				9004A-30057-	1		
1507 - 1607	EJVE..F650				9004A-30057-	1		

FIG.15-02 OIL FILTER

PROD_DATE	MODELS	SPEC CODE	DESCRIPTION	R/P	PART NUMBER	QYT	REV_REF FR	REV_REF TO
	+----------+							
	| 15651A | GASKET							
	+----------+							
1111 - 1507	EJVE..F650				90044-30258-	1		
1507 - 1607	EJVE..F650				90044-30258-	1		
	+----------+							
	| 15678C | FILTER, OIL CONTROL VALVE							
	+----------+							
1111 - 1507	EJVE..F650				15678-97201-	1		
1507 - 1607	EJVE..F650				15678-97201-	1		
	+----------+							
	| 15692 | GASKET, OIL FILTER BRACKET							
	+----------+							
1111 - 1507	EJVE..F650				90044-30239-	1		
1507 - 1607	EJVE..F650				90044-30239-	1		
	+----------+							
	| 15770B | PIPE ASSY, O							
	+----------+ IL							
1111 - 1507	EJVE..F650				15707-97402-	1		
1507 - 1607	EJVE..F650				15707-97402-	1		
	+----------+							
	| 15797B | BOLT, FILTER							
	+----------+							
1111 - 1507	EJVE..F650				9004A-10124-	2		
1507 - 1607	EJVE..F650				9004A-10124-	2		

FIG.16-01 WATER PUMP

(1111-1507)K3VE

K3VE

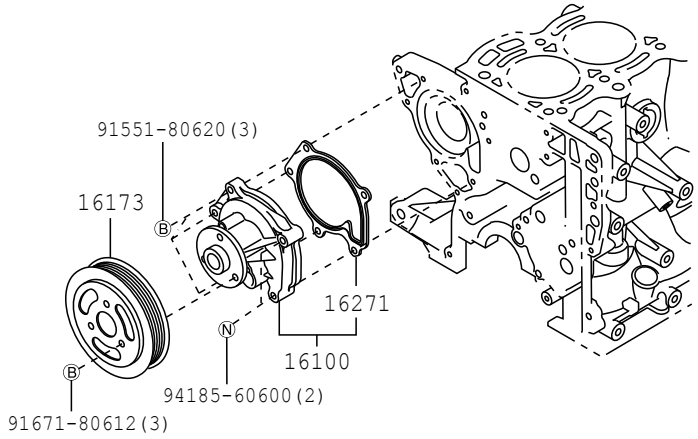

16F1

164661-A

FIG.16-01 WATER PUMP

(1111-)EJVE

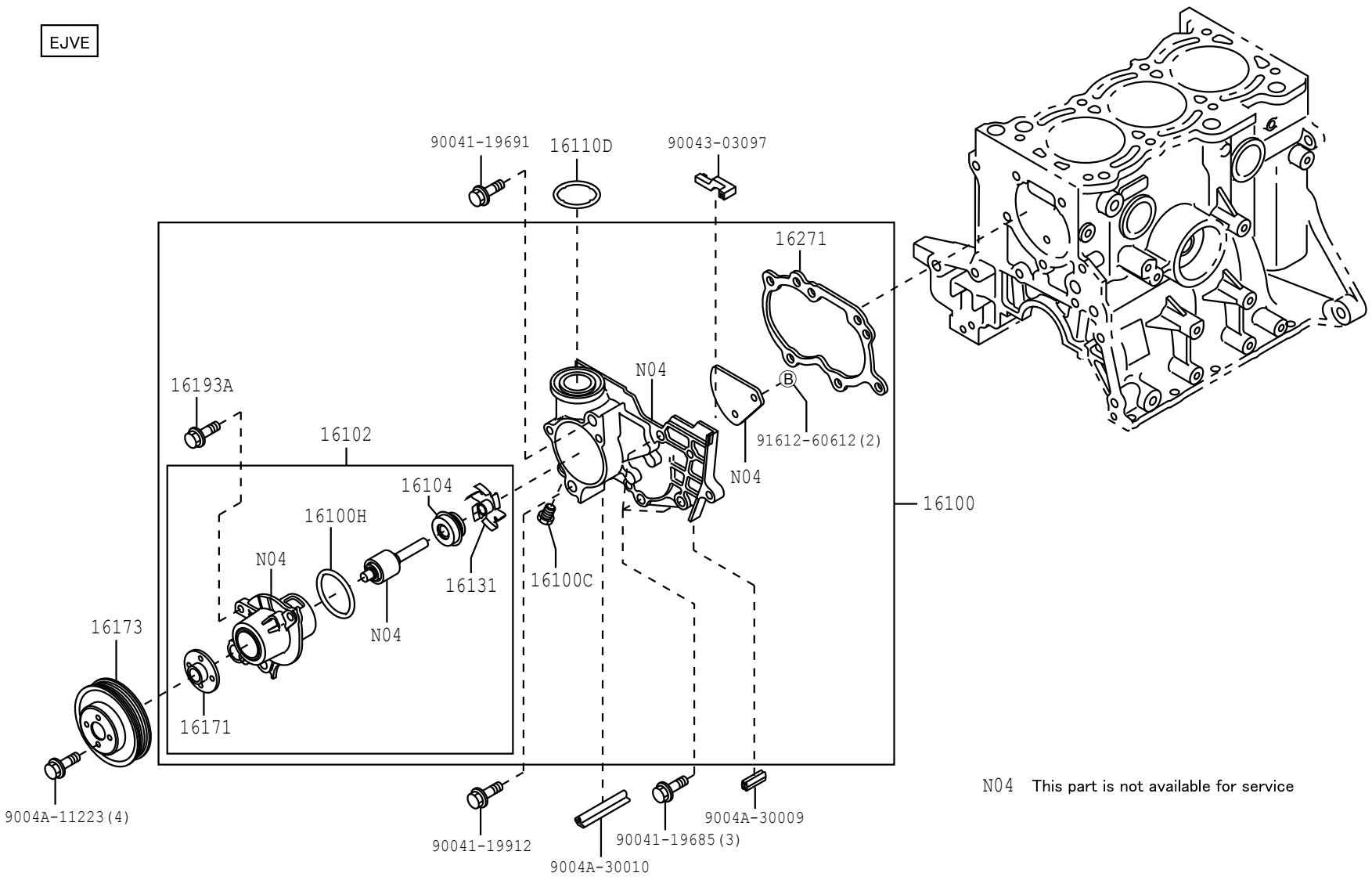

N04 This part is not available for service

16F1

164662

(1507-)1NRVE,2NRVE

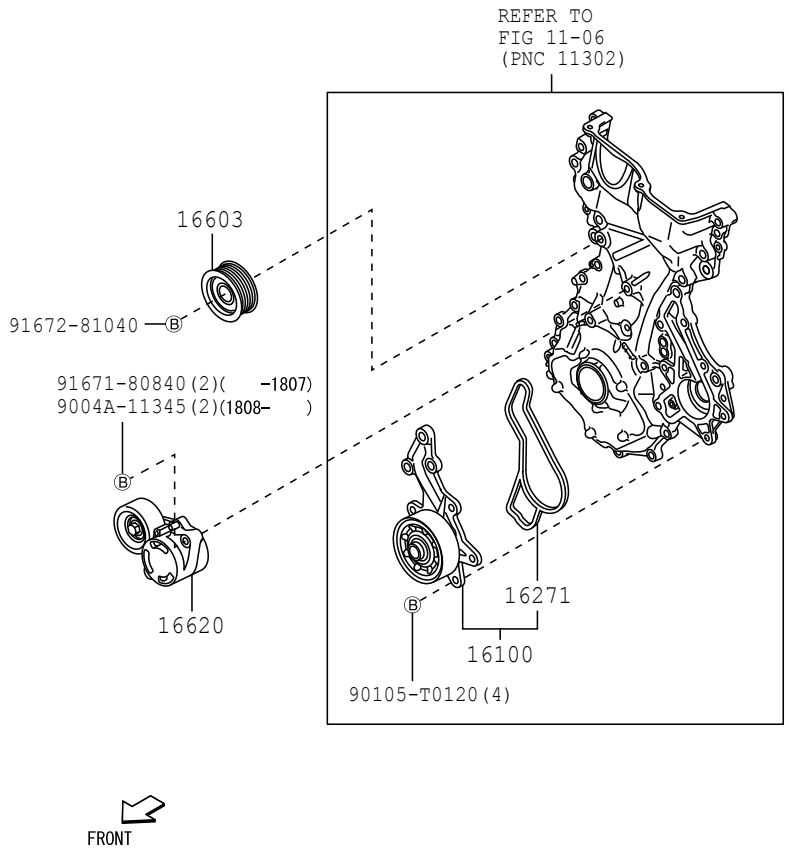

16F1

166063-B

FIG.16-01 WATER PUMP

PROD_DATE	MODELS	SPEC CODE	DESCRIPTION	R/P	PART NUMBER	QYT	REV_REF FR	REV_REF TO
	+----------+							
	| 16100 | PUMP ASSY, ENGINE WATER							
	+----------+							
1111 - 1301	K3VE..F651				16100-B9010-	1		
				#	(16100-B9011-)	1		
1302 - 1411	K3VE..F651				16100-B9021-	1		
				#	(16100-B9022-)	1		
1412 - 1502	K3VE..F651				16100-B9011-	1		
1111 - 1507	EJVE..F650				16100-B9321-	1		
1503 - 1507	K3VE..F651				16100-B9022-	1		
1507 - 1607	EJVE..F650				16100-B9321-	1		
1507 - 1901	1NRVE..F653				16100-B9490-	1		
1901 -	1NRVE,2NRVE..F65#				16100-B9490-	1		
	+----------+							
	| 16100C | PLUG, W/HEAD TAPER SCREW							
	+----------+							
1111 - 1507	EJVE..F650				90043-45010-	1		
1507 - 1607	EJVE..F650				90043-45010-	1		
	+----------+							
	| 16100H | RING, O(FOR WATER PUMP)							
	+----------+							
1111 - 1507	EJVE..F650				90043-01253-	1		
1507 - 1607	EJVE..F650				90043-01253-	1		
	+----------+							
	| 16102 | COVER SUB-ASSY, WATER PUMP							
	+----------+							
1111 - 1507	EJVE..F650				16102-B0010-	1		
1507 - 1607	EJVE..F650				16102-B0010-	1		
	+----------+							
	| 16104 | SEAL SET, WATER PUMP							
	+----------+							
1111 - 1507	EJVE..F650				16104-B0010-	1		
1507 - 1607	EJVE..F650				16104-B0010-	1		
	+----------+							
	| 16110D | RING, O, NO.2(FOR WATER PUMP)							
	+----------+							
1111 - 1507	EJVE..F650				16442-BZ010-	1		

PROD_DATE	MODELS	SPEC CODE	DESCRIPTION	R/P	PART NUMBER	QYT	REV_REF FR	REV_REF TO
	+----------+							
	| 16110D | RING, O, NO.2(FOR WATER PUMP)							
	CONTINUED--+							
1507 - 1607	EJVE..F650				16442-BZ010-	1		
	+----------+							
	| 16131 | ROTOR, WATER PUMP							
	+----------+							
1111 - 1507	EJVE..F650				16131-87209-	1		
1507 - 1607	EJVE..F650				16131-87209-	1		
	+----------+							
	| 16171 | SEAT, WATER PUMP PULLEY							
	+----------+							
1111 - 1507	EJVE..F650				16171-87201-	1		
1507 - 1607	EJVE..F650				16171-87201-	1		
	+----------+							
	| 16173 | PULLEY, WATER PUMP							
	+----------+							
1111 - 1507	K3VE..F651				16173-BZ010-	1		
1111 - 1507	EJVE..F650				16173-BZ020-	1		
1507 - 1607	EJVE..F650				16173-BZ020-	1		
	+----------+							
	| 16193A | BOLT(FOR WATER PUMP COVER)							
	+----------+							
1111 - 1507	EJVE..F650				91611-60618-	2		
1507 - 1607	EJVE..F650				91611-60618-	2		
	+----------+							
	| 16271 | GASKET, WATER PUMP							
	+----------+							
1111 - 1507	EJVE..F650				16271-87Z03-	1		
1111 - 1507	K3VE..F651				16271-BZ020-	1		
				#	(16271-B1010-)	1		
1507 - 1607	EJVE..F650				16271-87Z03-	1		
1507 - 1901	1NRVE..F653				16271-0Y030-	1		
1901 -	1NRVE,2NRVE..F65#				16271-0Y030-	1		
	+----------+							
	| 16603 | PULLEY SUB-ASSY, IDLER, NO.1							
	+----------+							
1507 - 1808	1NRVE..F653				16603-BZ040-	1		

FIG.16-01 WATER PUMP

PROD_DATE	MODELS	SPEC CODE	DESCRIPTION	R/P	PART NUMBER	QYT	REV_REF FR	REV_REF TO
	+----------+							
	| 16603 | PULLEY SUB-ASSY, IDLER, NO.1							
	CONTINUED--+							
1809 - 1901	1NRVE..F653				16603-BZ041-	1		
1901 -	1NRVE,2NRVE..F65#				16603-BZ041-	1		
	+----------+							
	| 16620 | TENSIONER ASSY, V-RIBBED BELT							
	+----------+							
1507 - 1901	1NRVE..F653				16620-BZ010-	1		
1901 -	1NRVE,2NRVE..F65#				16620-BZ010-	1		

FIG.16-03 RADIATOR & WATER OUTLET

(1111-1507)EJVE

RADIATOR

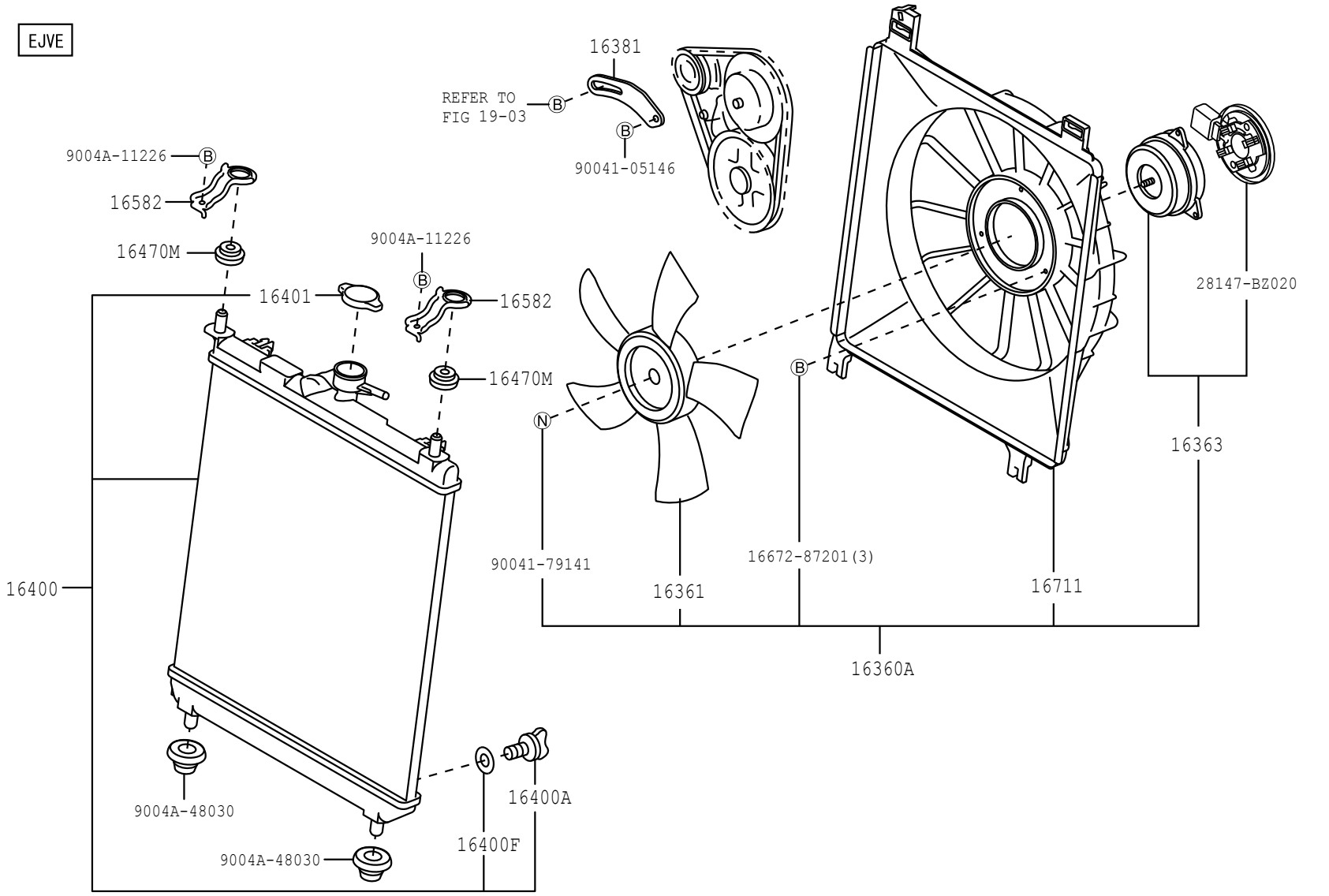

16F3

164664-A

FIG.16-03 RADIATOR & WATER OUTLET

(1111-1507)EJVE

WATER HOSE

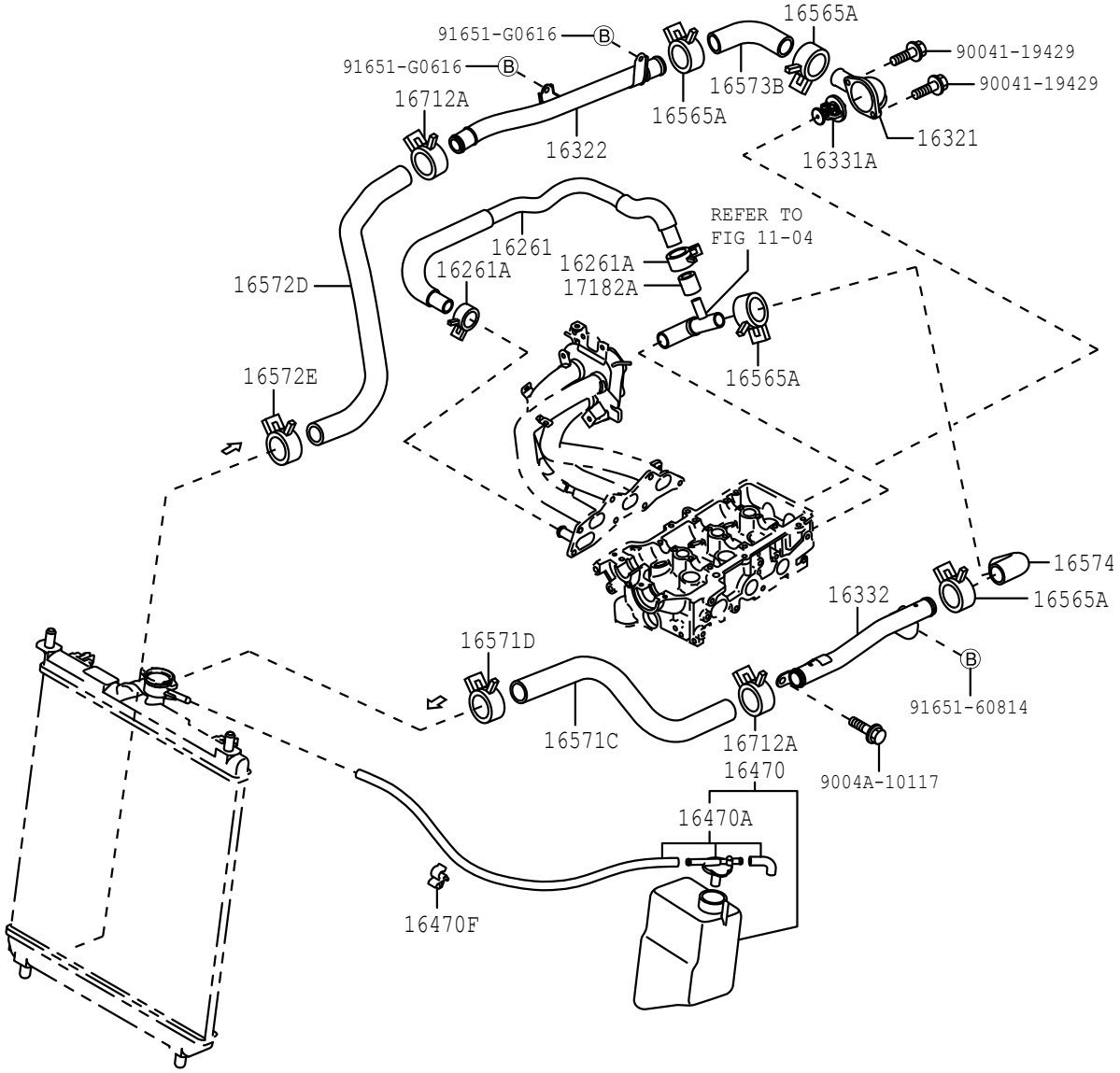

16F3

164665-A

FIG.16-03 RADIATOR & WATER OUTLET

(1111-1507)K3VE

RADIATOR

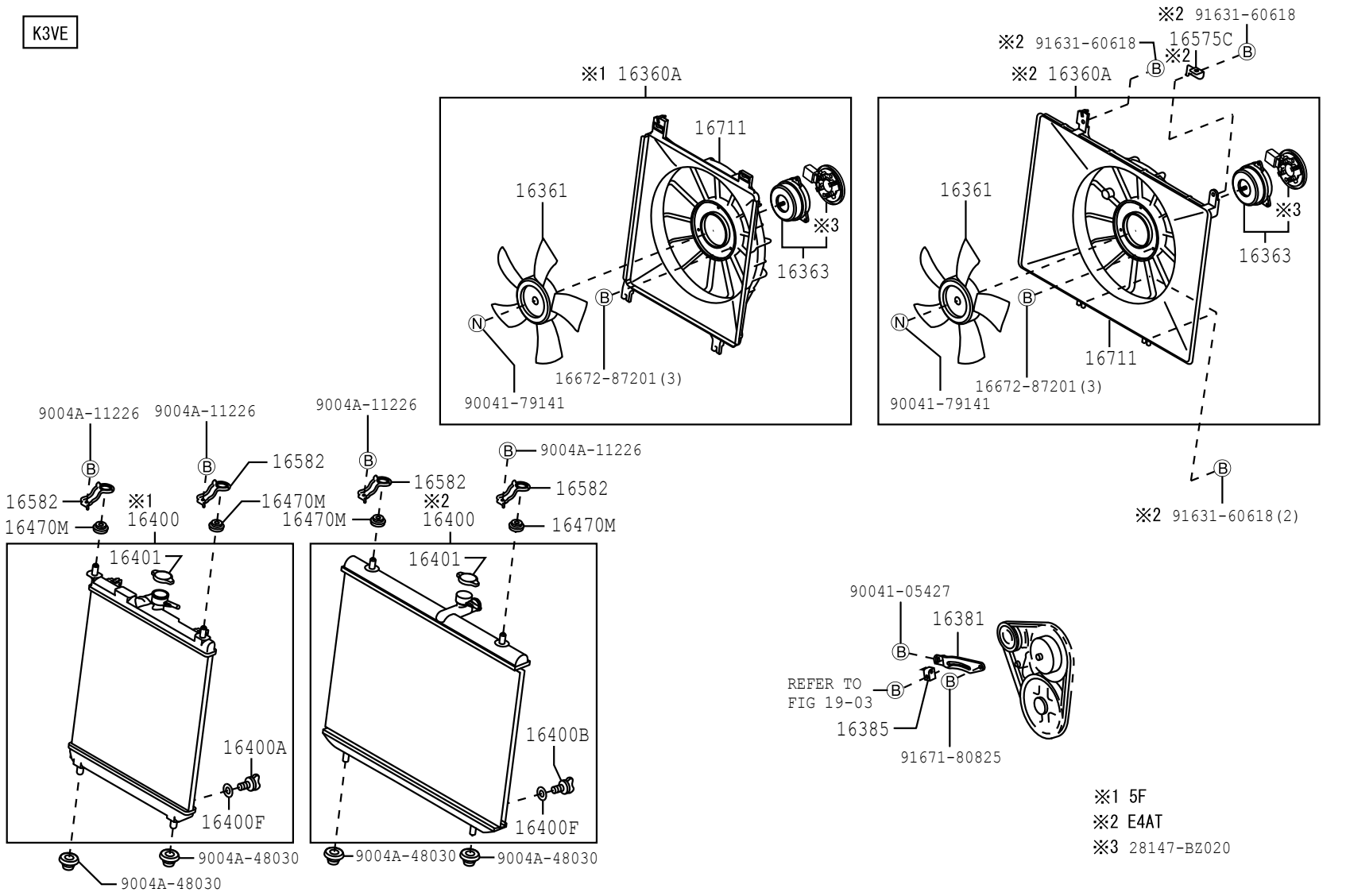

16F3

164667-A

(1111-1507)K3VE

IDLER PULLEY

K3VE

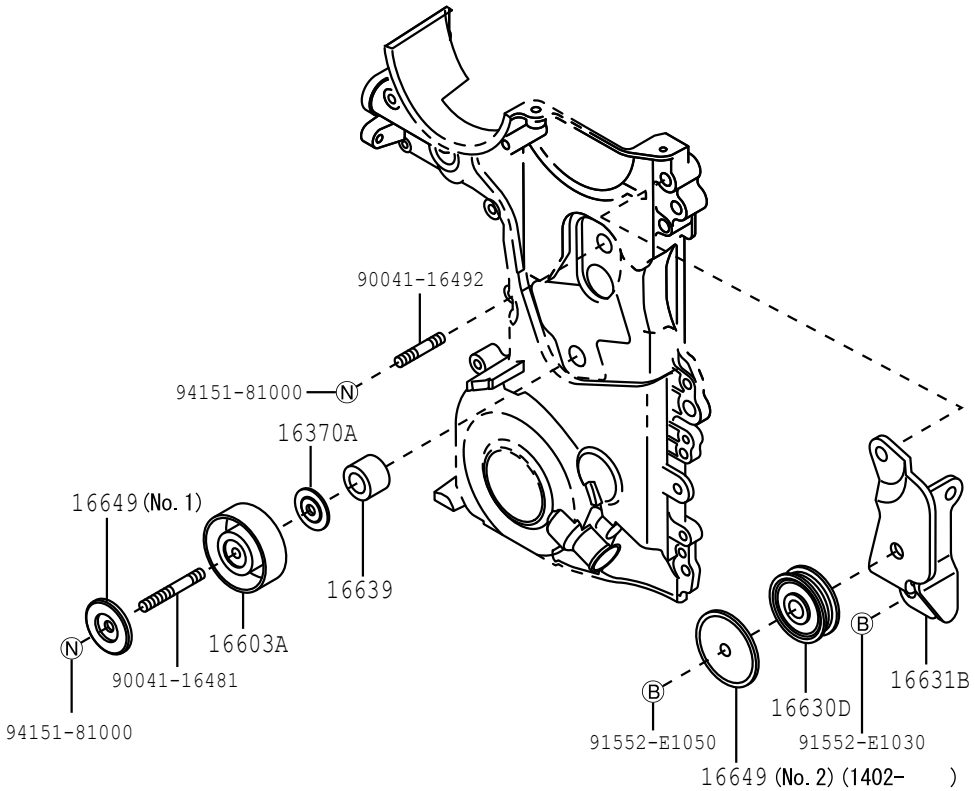

16F3

164669-A

(1111-1507)K3VE

WATER HOSE ILLUST NO. 2 OF 2

K3VE

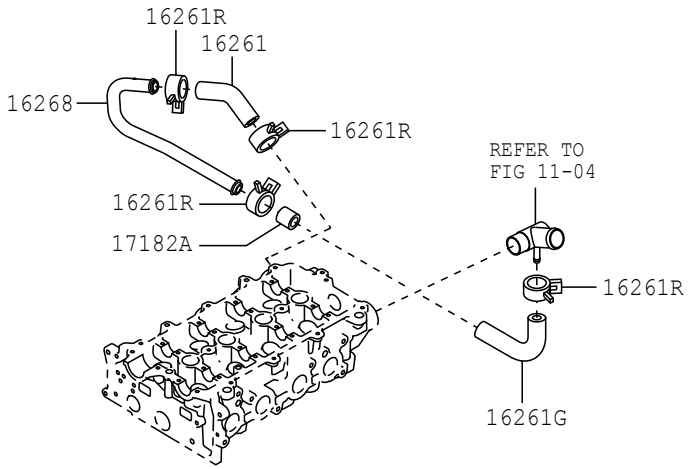

16F3 164671

(1111-1507)K3VE

WATER HOSE ILLUST NO. 1 OF 2

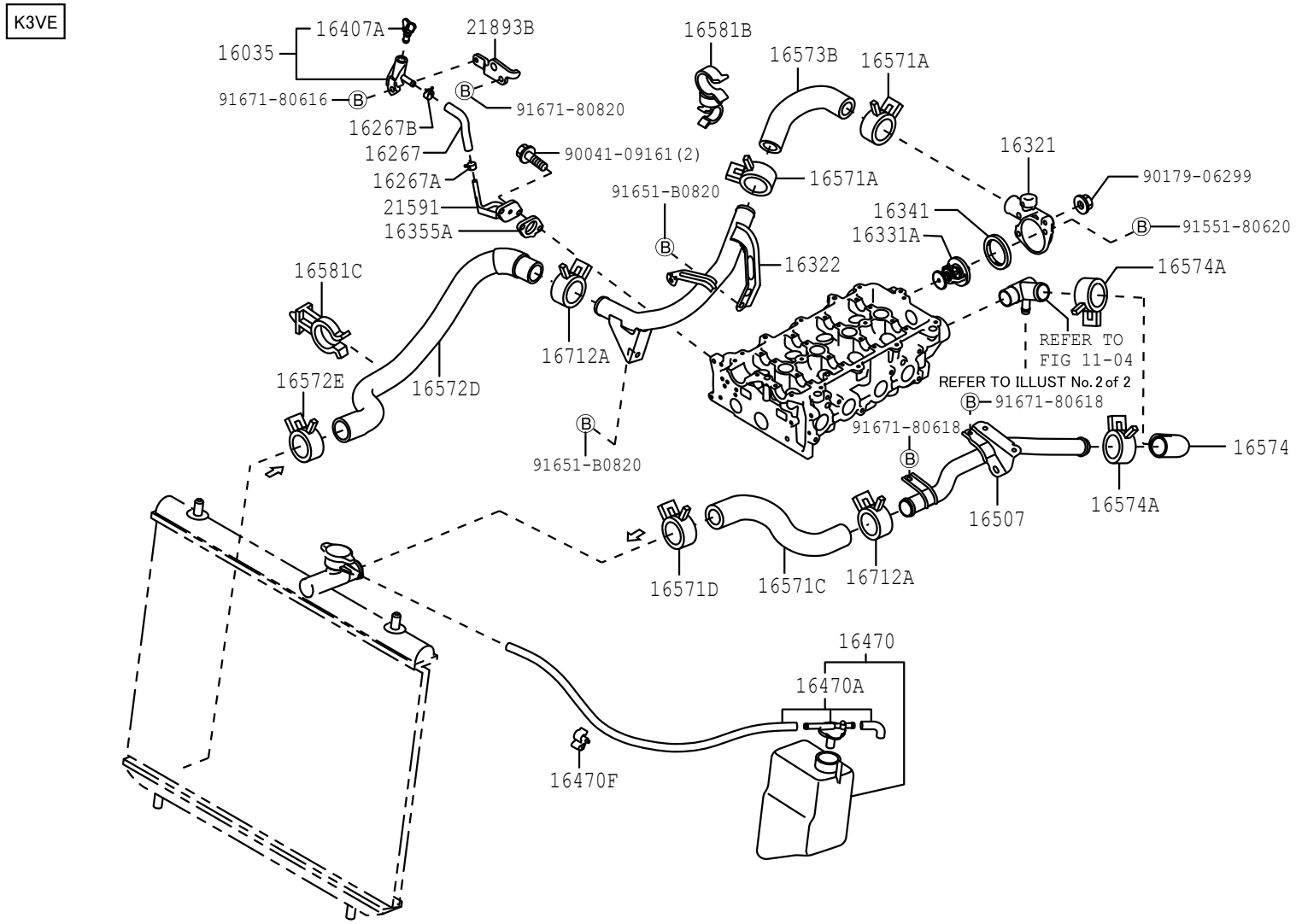

FIG. 16-03 RADIATOR & WATER OUTLET

(1507-)EJVE

RADIATOR

EJVE

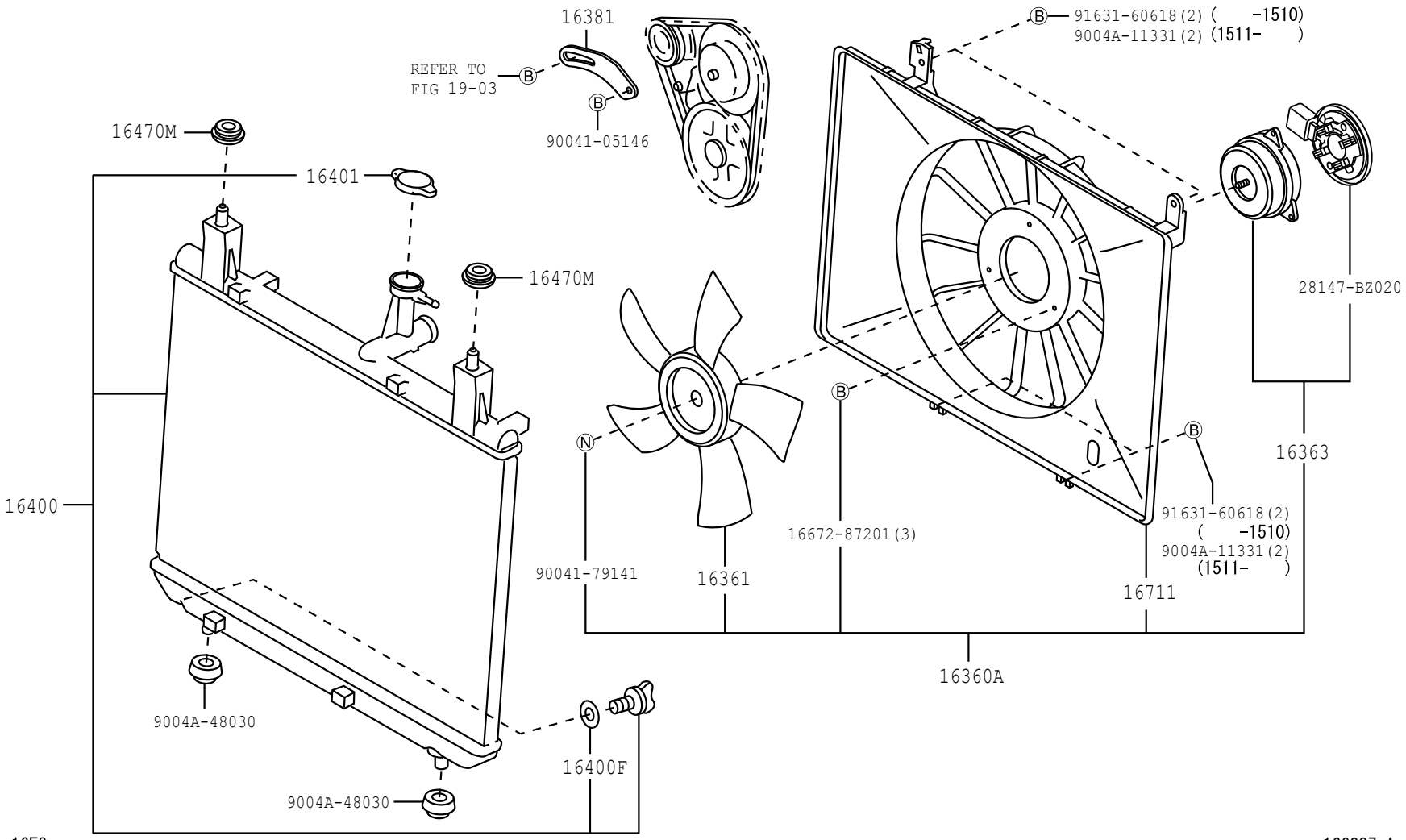

16F3

166087-A

FIG. 16-03 RADIATOR & WATER OUTLET

(1507-)EJVE

WATER HOSE

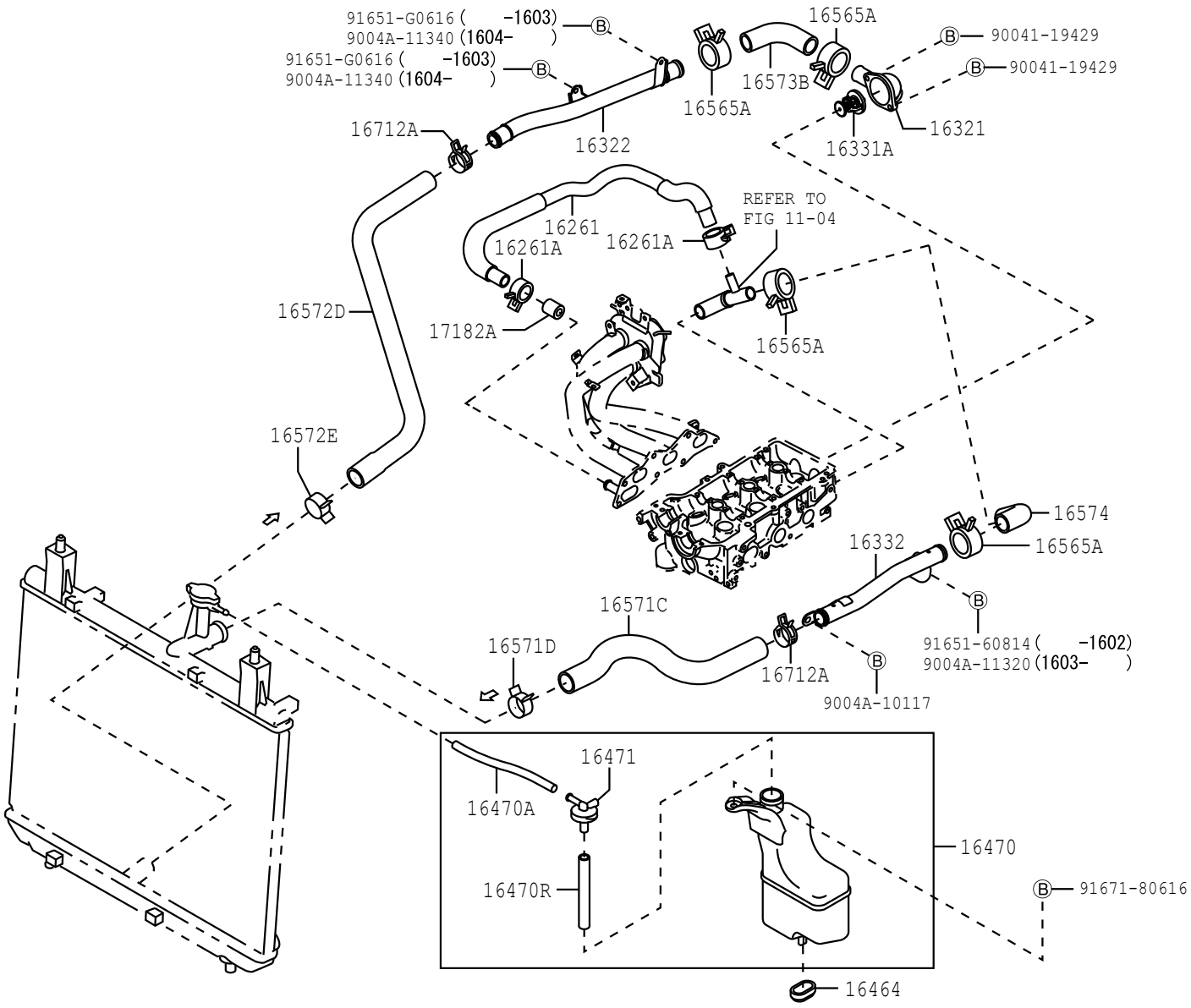

16F3

166088-D

FIG.16-03 RADIATOR & WATER OUTLET

(1507-)1NRVE,2NRVE

RADIATOR

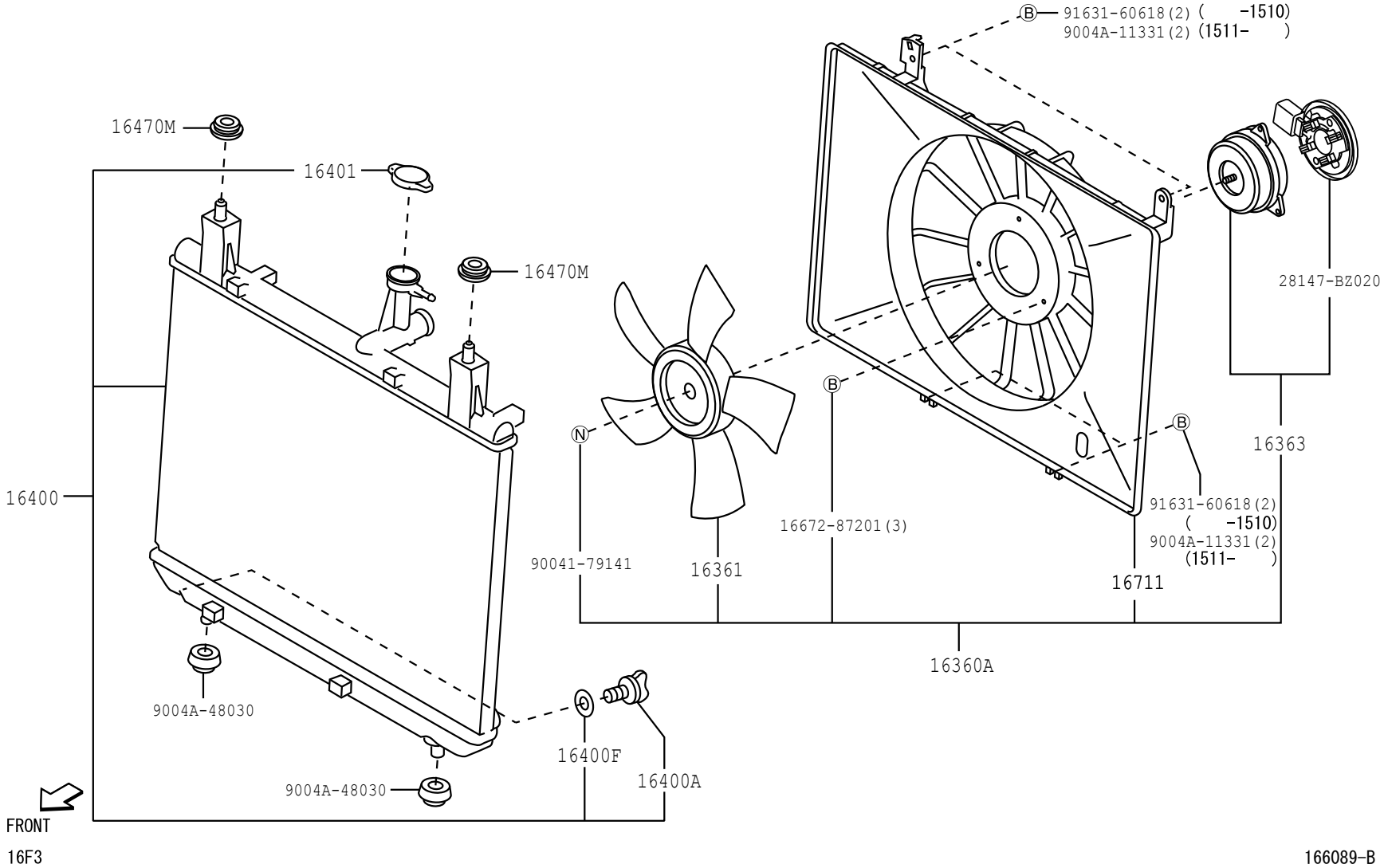

16F3

166089-B

FIG. 16-03 RADIATOR & WATER OUTLET

(1507-)1NRVE, 2NRVE

WATER HOSE

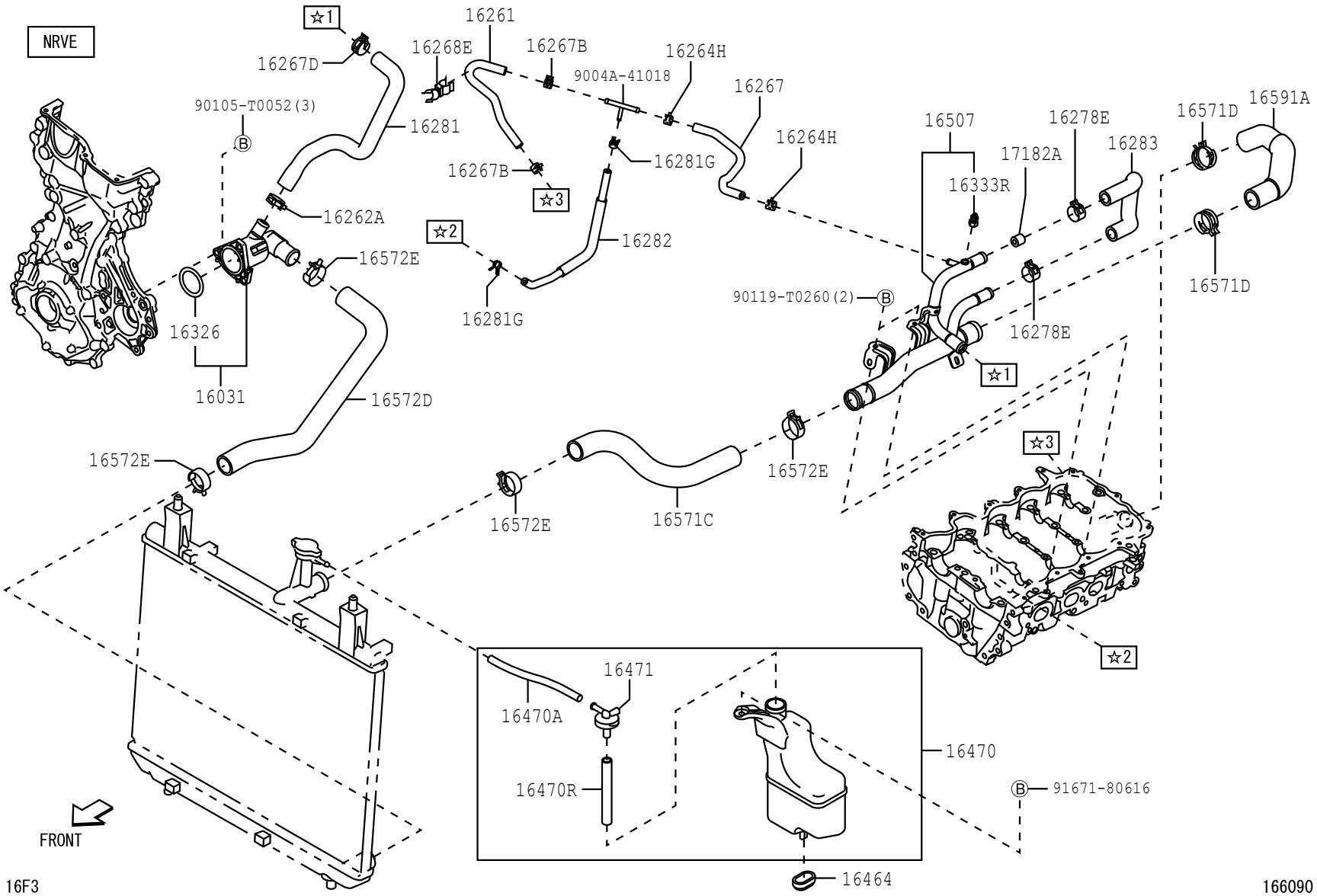

PROD_DATE	MODELS	SPEC CODE	DESCRIPTION	R/P	PART NUMBER	QYT	REV_REF FR	REV_REF TO
	+----------+							
	| 16031 | WATER INLET SUB-ASSY, W/THERMOSTAT							
	+----------+							
1507 - 1901	1NRVE..F653				16031-0Y010-	1		
1901 -	1NRVE,2NRVE..F65#				16031-0Y010-	1		
	+----------+							
	| 16035 | JOINT, WATER HOSE							
	+----------+							
1111 - 1507	K3VE..F651				16035-BZ010-	1		
				#	(16035-97401-)	1		
	+----------+							
	| 16261 | HOSE, WATER BY-PASS							
	+----------+							
1111 - 1507	EJVE..F650				16261-BZ010-	1		
1111 - 1507	K3VE..F651				16261-BZ020-	1		
1507 - 1607	EJVE..F650				16261-BZ010-	1		
1507 - 1901	1NRVE..F653				16261-BZ310-	1		
1901 -	1NRVE,2NRVE..F65#				16261-BZ310-	1		
	+----------+							
	| 16261A | CLAMP OR CLIP, HOSE(FOR WATER BY-PASS HOS							
	+----------+ E)							
1111 - 1507	EJVE..F650				90044-67435-	2		
1507 - 1607	EJVE..F650				90044-67435-	2		
	+----------+							
	| 16261G | HOSE, WATER BY-PASS, NO.1							
	+----------+							
1111 - 1507	K3VE..F651				16261-BZ030-	1		
	+----------+							
	| 16261R | CLAMP OR CLIP(FOR WATER BY-PASS HOSE)							
	+----------+							
1111 - 1507	K3VE..F651				90044-67485-	4		
	+----------+							
	| 16262A | CLIP(FOR WATER INLET HOSE)							
	+----------+							
1507 - 1706	1NRVE..F653				90466-T0050-	1		
1707 - 1901	1NRVE..F653				90044-66054-	1		
1901 -	1NRVE,2NRVE..F65#				90044-66054-	1		

FIG.16-03 RADIATOR & WATER OUTLET

PROD_DATE	MODELS	SPEC CODE	DESCRIPTION	R/P	PART NUMBER	QYT	REV_REF FR	REV_REF TO
	+----------+							
	| 16264H | CLIP(FOR WATER BY-PASS HOSE NO.3)							
	+----------+							
1507 - 1901	1NRVE..F653				90466-T0015-	2		
				#	(96136-41501-)	1		
1901 -	1NRVE,2NRVE..F65#				90466-T0015-	2		
				#	(96136-41501-)	1		
	+----------+							
	| 16267 | HOSE, WATER BY-PASS, NO.3							
	+----------+							
1111 - 1507	K3VE..F651				16267-BZ010-	1		
				#	(16267-97401-)	1		
1507 - 1901	1NRVE..F653				16267-BZ050-	1		
1901 -	1NRVE,2NRVE..F65#				16267-BZ050-	1		
	+----------+							
	| 16267A | CLAMP OR CLIP(FOR WATER BY-PASS HOSE NO.3							
	+----------+)							
1111 - 1507	K3VE..F651				90044-67029-	1		
	+----------+							
	| 16267B | CLIP(FOR WATER BY-PASS HOSE)							
	+----------+							
1111 - 1507	K3VE..F651				90044-67400-	1		
1507 - 1901	1NRVE..F653				90466-T0015-	2		
				#	(96136-41501-)	1		
1901 -	1NRVE,2NRVE..F65#				90466-T0015-	2		
				#	(96136-41501-)	1		
	+----------+							
	| 16267D | CLIP(FOR WATER BY-PASS HOSE NO.4)							
	+----------+							
1507 - 1901	1NRVE..F653				9004A-46348-	1		
				#	(96136-42701-)	1		
1901 -	1NRVE,2NRVE..F65#				9004A-46348-	1		
				#	(96136-42701-)	1		
	+----------+							
	| 16268 | PIPE, WATER BY-PASS, NO.1							
	+----------+							
1111 - 1507	K3VE..F651				16268-BZ010-	1		
	+----------+							
	| 16268E | CLAMP, HOSE(FOR WATER BY-PASS PIPE)							
	+----------+							
1507 - 1901	1NRVE..F653				9004A-46343-	1		

PROD_DATE	MODELS	SPEC CODE	DESCRIPTION	R/P	PART NUMBER	QYT	REV_REF FR	REV_REF TO
	+----------+							
	| 16268E | CLAMP, HOSE(FOR WATER BY-PASS PIPE)							
	CONTINUED--+							
1901 -	1NRVE,2NRVE..F65#				9004A-46343-	1		
	+----------+							
	| 16278E | CLIP(FOR WATER BY-PASS HOSE)							
	+----------+							
1507 - 1901	1NRVE..F653				9004A-46351-	2		
				#	(90044-67485-)	1		
1901 -	1NRVE,2NRVE..F65#				9004A-46351-	2		
				#	(90044-67485-)	1		
	+----------+							
	| 16281 | HOSE, WATER BY-PASS, NO.4							
	+----------+							
1507 - 1901	1NRVE..F653				16281-BZ030-	1		
1901 -	1NRVE,2NRVE..F65#				16281-BZ030-	1		
	+----------+							
	| 16281G | CLIP(FOR WATER BY-PASS HOSE NO.5)							
	+----------+							
1507 - 1901	1NRVE..F653				9004A-46345-	2		
				#	(96132-41100-000)	1		
1901 -	1NRVE,2NRVE..F65#				9004A-46345-	2		
				#	(96132-41100-000)	1		
	+----------+							
	| 16282 | HOSE, WATER BY-PASS, NO.5							
	+----------+							
1507 - 1901	1NRVE..F653				16282-BZ010-	1		
1901 -	1NRVE,2NRVE..F65#				16282-BZ010-	1		
	+----------+							
	| 16283 | HOSE, WATER BY-PASS, NO.6							
	+----------+							
1507 - 1901	1NRVE..F653				16283-BZ010-	1		
1901 -	1NRVE,2NRVE..F65#				16283-BZ010-	1		
	+----------+							
	| 16321 | INLET, WATER							
	+----------+							
1111 - 1507	K3VE..F651				16321-BZ010-	1		
				#	(16321-97403-)	1		
1111 - 1507	EJVE..F650				16321-BZ020-	1		
1507 - 1607	EJVE..F650				16321-BZ020-	1		

FIG.16-03 RADIATOR & WATER OUTLET

PROD_DATE	MODELS	SPEC CODE	DESCRIPTION	R/P	PART NUMBER	QYT	REV_REF FR	REV_REF TO
	+----------+							
	| 16322 | PIPE, WATER INLET							
	+----------+							
1111 - 1502	EJVE..F650				16322-BZ010-	1		
1111 - 1507	K3VE..F651				16322-BZ050-	1		
1502 - 1507	EJVE..F650		SET PART(PNC 16571)		16322-BZ011-	1		
1507 - 1607	EJVE..F650		SET PART(PNC 16571)		16322-BZ011-	1		
	+----------+							
	| 16326 | GASKET, WATER INLET HOUSING, NO.2							
	+----------+							
1507 - 1901	1NRVE..F653				16326-0Y010-	1		
1901 -	1NRVE,2NRVE..F65#				16326-0Y010-	1		
	+----------+							
	| 16331A | THERMOSTAT							
	+----------+							
1111 - 1507	K3VE..F651				90048-33088-	1		
1111 - 1507	EJVE..F650		*WAX 84-97		9004A-91027-	1		
1507 - 1607	EJVE..F650		*WAX 84-97		9004A-91027-	1		
	+----------+							
	| 16332 | PIPE, WATER OUTLET, NO.1							
	+----------+							
1111 - 1501	EJVE..F650				16332-BZ010-	1		
1502 - 1507	EJVE..F650		SET PART(PNC 16572)		16332-BZ011-	1		
1507 - 1607	EJVE..F650		SET PART(PNC 16572)		16332-BZ011-	1		
	+----------+							
	| 16333R | PLUG(FOR WATER OUTLET HOUSING)							
	+----------+							
1507 - 1609	1NRVE..F653				47546-87202-	1		
1610 - 1811	1NRVE..F653				47547-B2030-	1		
1812 - 1901	1NRVE..F653				9004A-93005-	1		
				#	(47546-87202-)	1		
1901 -	1NRVE,2NRVE..F65#				9004A-93005-	1		
				#	(47546-87202-)	1		
	+----------+							
	| 16341 | GASKET, WATER OUTLET							
	+----------+							
1111 - 1507	K3VE..F651				16341-35010-	1		

PROD_DATE	MODELS	SPEC CODE	DESCRIPTION	R/P	PART NUMBER	QYT	REV_REF FR	REV_REF TO
	+----------+							
	| 16355A | GASKET(FOR WATER BY-PASS JOINT FRONT)							
	+----------+							
1111 - 1507	K3VE..F651				16258-BZ010-	1		
				#	(16258-97401-)	1		
	+----------+							
	| 16360A | FAN ASSY, W/MOTOR							
	+----------+							
1111 - 1507	K3VE,EJVE..F65#..5F				16360-BZ080-	1		
1111 - 1507	K3VE..F651..E4AT				16360-BZ210-	1		
1507 - 1901	EJVE,1NRVE..F65#				16360-BZ210-	1		
1901 -	1NRVE,2NRVE..F65#				16360-BZ210-	1		
	+----------+							
	| 16361 | FAN							
	+----------+							
1111 - 1507	K3VE,EJVE..F65#				16361-BZ090-	1		
1507 - 1901	EJVE,1NRVE..F65#				16361-BZ090-	1		
1901 -	1NRVE,2NRVE..F65#				16361-BZ090-	1		
	+----------+							
	| 16363 | MOTOR, COOLING FAN							
	+----------+							
1111 - 1507	K3VE,EJVE..F65#				16363-BZ100-	1		
1507 - 1901	EJVE,1NRVE..F65#				16363-BZ100-	1		
1901 -	1NRVE,2NRVE..F65#				16363-BZ100-	1		
	+----------+							
	| 16370A | PLATE COVER							
	+----------+							
1111 - 1507	K3VE..F651				16659-B0010-	1		
	+----------+							
	| 16381 | BAR, FAN BELT ADJUSTING							
	+----------+							
1111 - 1507	EJVE..F650				16381-BZ020-	1		
1111 - 1507	K3VE..F651				16381-BZ050-	1		
1507 - 1607	EJVE..F650				16381-BZ020-	1		
	+----------+							
	| 16385 | SLIDER, FAN BELT ADJUSTING							
	+----------+							
1111 - 1507	K3VE..F651				16385-BZ010-	1		

FIG.16-03 RADIATOR & WATER OUTLET

PROD_DATE	MODELS	SPEC CODE	DESCRIPTION	R/P	PART NUMBER	QYT	REV_REF FR	REV_REF TO
	+----------+							
	| 16400 | RADIATOR ASS							
	+----------+ Y							
1111 - 1507	K3VE,EJVE..F65#..5F				16400-BZ430-	1		
1111 - 1507	K3VE..F651..E4AT				16400-BZ470-	1		
1507 - 1607	EJVE..F650				16400-BZ660-	1		
1507 - 1901	1NRVE..F653..5F				16400-BZ680-	1		
1507 - 1901	1NRVE..F653..E4AT				16400-BZ700-	1		
1901 -	1NRVE,2NRVE..F65#..5F				16400-BZ680-	1		
1901 -	1NRVE,2NRVE..F65#..E4AT				16400-BZ700-	1		
	+----------+							
	| 16400A | COCK SUB-ASSY, RADIATOR DRAIN							
	+----------+							
1111 - 1507	K3VE,EJVE..F65#..5F				16417-0C180-	1		
1508 - 1901	1NRVE..F653				16417-BZ050-	1		
1901 -	1NRVE,2NRVE..F65#				16417-BZ050-	1		
	+----------+							
	| 16400B | PLUG, RADIATOR DRAIN COCK							
	+----------+							
1111 - 1507	K3VE..F651..E4AT				23322-87101-	1		
	+----------+							
	| 16400F | PACKING(FOR RADIATOR DRAIN COCK)							
	+----------+							
1111 - 1507	K3VE,EJVE..F65#				16442-97201-	1		
1507 - 1607	EJVE..F650				16442-97201-	1		
1507 - 1901	1NRVE..F653				16442-97201-	1		
1901 -	1NRVE,2NRVE..F65#				16442-97201-	1		
	+----------+							
	| 16401 | CAP SUB-ASSY, RADIATOR							
	+----------+							
1111 - 1507	K3VE,EJVE..F65#				16401-BZ020-	1		
1507 - 1607	EJVE..F650				16401-BZ020-	1		
1507 - 1901	1NRVE..F653				16401-BZ020-	1		
1901 -	1NRVE,2NRVE..F65#				16401-BZ020-	1		

PROD_DATE	MODELS	SPEC CODE	DESCRIPTION	R/P	PART NUMBER	QYT	REV_REF FR	REV_REF TO
	+----------+							
	| 16407A | COCK SUB-ASSY, RADIATOR DRAIN							
	+----------+							
1111 - 1507	K3VE..F651				16407-BZ020-	1		
				#	(16407-97201-)	1		
	+----------+							
	| 16464 | BUSH, TANK LOWER							
	+----------+							
1507 - 1607	EJVE..F650				16464-BZ010-	1		
1507 - 1901	1NRVE..F653				16464-BZ010-	1		
1901 -	1NRVE,2NRVE..F65#				16464-BZ010-	1		
	+----------+							
	| 16470 | TANK ASSY, RADIATOR RESERVE							
	+----------+							
1111 - 1506	K3VE,EJVE..F65#				16470-BZ130-	1		
1507 - 1607	EJVE..F650				16470-BZ210-	1		
1507 - 1901	1NRVE..F653				16470-BZ210-	1		
1901 -	1NRVE,2NRVE..F65#				16470-BZ210-	1		
	+----------+							
	| 16470A | HOSE OR PIPE(FOR RADIATOR RESERVE TANK)							
	+----------+							
1111 - 1506	K3VE,EJVE..F65#				16503-BZ070-	1		
1507 - 1607	EJVE..F650				16472-BZ090-	1		
1507 - 1901	1NRVE..F653				16472-BZ090-	1		
1901 -	1NRVE,2NRVE..F65#				16472-BZ090-	1		
	+----------+							
	| 16470F | CLAMP, RADIATOR RESERVE TANK HOSE							
	+----------+							
1111 - 1507	K3VE,EJVE..F65#				90044-64563-	1		
	+----------+							
	| 16470M | GROMMET							
	+----------+							
1111 - 1507	K3VE,EJVE..F65#				9004A-48017-	2		
1507 - 1607	EJVE..F650				9004A-48017-	2		
1507 - 1901	1NRVE..F653				9004A-48017-	2		
1901 -	1NRVE,2NRVE..F65#				9004A-48017-	2		

FIG.16-03 RADIATOR & WATER OUTLET

PROD_DATE	MODELS	SPEC CODE	DESCRIPTION	R/P	PART NUMBER	QYT	REV_REF FR	REV_REF TO
	+----------+							
	| 16470R | HOSE, NO.2(FOR RADIATOR RESERVE TANK)							
	+----------+							
1507 - 1607	EJVE..F650				16477-BZ010-	1		
1507 - 1901	1NRVE..F653				16477-BZ010-	1		
1901 -	1NRVE,2NRVE..F65#				16477-BZ010-	1		
	+----------+							
	| 16471 | CAP SUB-ASSY, RESERVE TANK							
	+----------+							
1507 - 1607	EJVE..F650				16471-BZ100-	1		
1507 - 1901	1NRVE..F653				16471-BZ100-	1		
1901 -	1NRVE,2NRVE..F65#				16471-BZ100-	1		
	+----------+							
	| 16507 | PIPE SUB-ASSY, RADIATOR							
	+----------+							
1111 - 1507	K3VE..F651				16507-BZ050-	1		
1507 - 1609	1NRVE..F653				16507-BZ030-	1		
1610 - 1901	1NRVE..F653				16507-BZ031-	1		
1901 -	1NRVE,2NRVE..F65#				16507-BZ031-	1		
	+----------+							
	| 16565A | CLIP							
	+----------+							
1111 - 1204	EJVE..F650				90044-67493-	4		
				#	(90044-67625-)	1		
1205 - 1507	EJVE..F650				90044-66030-	4		
1507 - 1607	EJVE..F650				90044-66030-	4		
	+----------+							
	| 16571A | CLAMP OR CLIP, HOSE(FOR RADIATOR INLET)							
	+----------+							
1111 - 1507	K3VE..F651				90044-67473-	2		
	+----------+							
	| 16571C | HOSE, RADIATOR, NO.1							
	+----------+							
1111 - 1501	EJVE..F650				16571-BZ220-	1		
1111 - 1507	K3VE..F651..E4AT				16571-BZ100-	1		
1111 - 1507	K3VE..F651..5F				16571-BZ230-	1		
1502 - 1507	EJVE..F650				16571-BZ221-	1		

PROD_DATE	MODELS	SPEC CODE	DESCRIPTION	R/P	PART NUMBER	QYT	REV_REF FR	REV_REF TO
	+----------+							
	| 16571C | HOSE, RADIATOR, NO.1							
	CONTINUED--+							
1507 - 1607	EJVE..F650				16571-BZ270-	1		
1507 - 1901	1NRVE..F653				16571-BZ280-	1		
1901 -	1NRVE,2NRVE..F65#				16571-BZ280-	1		
	+----------+							
	| 16571D | CLIP, RADIATOR HOSE, NO.1							
	+----------+							
1111 - 1507	EJVE..F650				90044-66010-	1		
1111 - 1507	K3VE..F651..5F				90044-67473-	1		
1111 - 1507	K3VE..F651..E4AT				90467-34004-	1		
1507 - 1607	EJVE..F650				90044-66010-	1		
1507 - 1901	1NRVE..F653				9004A-46346-	2		
				#	(96136-43901-)	1		
1901 -	1NRVE,2NRVE..F65#				9004A-46346-	2		
				#	(96136-43901-)	1		
	+----------+							
	| 16572D | HOSE, RADIATOR, NO.2							
	+----------+							
1111 - 1408	K3VE..F651..E4AT				16572-BZ100-	1		
1111 - 1408	K3VE..F651..5F				16572-BZ160-	1		
1111 - 1501	EJVE..F650				16572-BZ150-	1		
1409 - 1507	K3VE..F651..5F				16572-BZ250-	1		
1409 - 1507	K3VE..F651..E4AT				16572-BZ260-	1		
1502 - 1507	EJVE..F650				16572-BZ151-	1		
1507 - 1607	EJVE..F650				16572-BZ210-	1		
1507 - 1901	1NRVE..F653				16572-BZ220-	1		
1901 -	1NRVE,2NRVE..F65#				16572-BZ220-	1		
	+----------+							
	| 16572E | CLIP, RADIATOR HOSE, NO.2							
	+----------+							
1111 - 1507	EJVE..F650				90044-66010-	1		
1111 - 1507	K3VE..F651..5F				90044-67473-	1		

FIG.16-03 RADIATOR & WATER OUTLET

PROD_DATE	MODELS	SPEC CODE	DESCRIPTION	R/P	PART NUMBER	QYT	REV_REF FR	REV_REF TO
	+----------+							
	| 16572E | CLIP, RADIATOR HOSE, NO.2							
	CONTINUED--+							
1111 - 1507	K3VE..F651..E4AT				90467-34004-	1		
1507 - 1607	EJVE..F650				90044-66010-	1		
1507 - 1807	1NRVE..F653				90044-67482-	4		
1808 - 1901	1NRVE..F653				9004A-46395-	4		
				#	(90044-67482-)	1		
1901 -	1NRVE,2NRVE..F65#				9004A-46395-	4		
				#	(90044-67482-)	1		
	+----------+							
	| 16573B | HOSE, RADIATOR, NO.3							
	+----------+							
1111 - 1507	K3VE..F651				16573-BZ010-	1		
1111 - 1507	EJVE..F650				16573-BZ020-	1		
1507 - 1607	EJVE..F650				16573-BZ020-	1		
	+----------+							
	| 16574 | HOSE, RADIATOR, NO.4							
	+----------+							
1111 - 1507	K3VE..F651				16574-BZ010-	1		
				#	(16574-B1010-)	1		
1111 - 1507	EJVE..F650				16574-BZ020-	1		
1507 - 1607	EJVE..F650				16574-BZ020-	1		
	+----------+							
	| 16574A | CLIP, RADIATOR HOSE, NO.4							
	+----------+							
1111 - 1507	K3VE..F651				90044-67473-	2		
	+----------+							
	| 16575C | BRACKET, WATER HOSE CLAMP, NO.1							
	+----------+							
1111 - 1507	K3VE..F651..E4AT				16575-BZ010-	1		
	+----------+							
	| 16581B | CLAMP, HOSE(FOR RADIATOR HOSE)							
	+----------+							
1111 - 1507	K3VE..F651				90044-64881-	1		
	+----------+							
	| 16581C | CLAMP, HOSE(FOR RADIATOR HOSE NO.2)							
	+----------+							
1111 - 1409	K3VE..F651				9004A-46292-	1		
				#	(90044-64765-)	1		

PROD_DATE	MODELS	SPEC CODE	DESCRIPTION	R/P	PART NUMBER	QYT	REV_REF FR	REV_REF TO
	+----------+							
	| 16582 | BRACKET, RADIATOR, NO.1							
	+----------+							
1111 - 1507	K3VE,EJVE..F65#				16582-BZ070-	2		
	+----------+							
	| 16591A | HOSE, RADIATOR(FOR RADIATOR PIPE)							
	+----------+							
1507 - 1901	1NRVE..F653				16571-BZ260-	1		
1901 -	1NRVE,2NRVE..F65#				16571-BZ260-	1		
	+----------+							
	| 16603A | PULLEY SUB-ASSY, IDLER, NO.1							
	+----------+							
1111 - 1507	K3VE..F651				16603-97401-	1		
	+----------+							
	| 16630D | PULLEY ASSY, IDLER							
	+----------+							
1111 - 1507	K3VE..F651				16630-97402-	1		
	+----------+							
	| 16631B | BRACKET, IDLER PULLEY							
	+----------+							
1111 - 1507	K3VE..F651				16631-BZ011-	1		
	+----------+							
	| 16639 | SPACER, IDLER PULLEY							
	+----------+							
1111 - 1507	K3VE..F651				16639-BZ022-	1		
	+----------+							
	| 16649 | PLATE, IDLER PULLEY COVER							
	+----------+							
1111 - 1507	K3VE..F651		NO.1		16649-B0020-	1		
1402 - 1507	K3VE..F651		NO.2		16649-BZ030-	1		
	+----------+							
	| 16711 | SHROUD, FAN							
	+----------+							
1111 - 1507	K3VE..F651..E4AT				16711-BZ050-	1		
1111 - 1507	K3VE,EJVE..F65#..5F				16711-BZ060-	1		
1507 - 1901	EJVE,1NRVE..F65#				16711-BZ050-	1		
1901 -	1NRVE,2NRVE..F65#				16711-BZ050-	1		

FIG.16-03 RADIATOR & WATER OUTLET

PROD_DATE	MODELS	SPEC CODE	DESCRIPTION	R/P	PART NUMBER	QYT	REV_REF FR	REV_REF TO
	+----------+							
	| 16712A | CLIP							
	+----------+							
1111 - 1204	EJVE..F650				90044-67493-	2		
				#	(90044-67625-)	1		
1111 - 1507	K3VE..F651				90044-67473-	2		
1205 - 1507	EJVE..F650				90044-66030-	2		
1507 - 1607	EJVE..F650				90044-66030-	2		
	+----------+							
	| 17182A | ORIFICE, WAT							
	+----------+ ER							
1111 - 1507	EJVE..F650				17182-BZ010-	1		
1111 - 1507	K3VE..F651				17182-BZ020-	1		
1507 - 1607	EJVE..F650				17182-BZ010-	1		
1507 - 1901	1NRVE..F653				17182-BZ020-	1		
1901 -	1NRVE,2NRVE..F65#				17182-BZ020-	1		
	+----------+							
	| 21591 | PLATE, WATER BY-PASS							
	+----------+							
1111 - 1507	K3VE..F651				21591-BZ010-	1		
				#	(21591-97401-)	1		
	+----------+							
	| 21893B | BRACKET							
	+----------+							
1111 - 1507	K3VE..F651				21893-BZ010-	1		

(1111-)

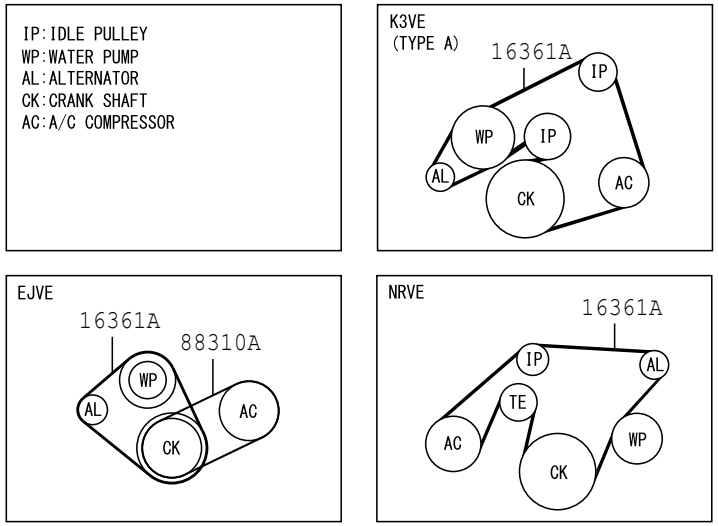

1605

164676-B

PROD_DATE	MODELS	SPEC CODE	DESCRIPTION	R/P	PART NUMBER	QYT	REV_REF FR	REV_REF TO
	+----------+							
	| 16361A | BELT, V(FOR FAN & ALTERNATOR)							
	+----------+							
1111 - 1507	EJVE..F650				9004A-91017-	1		
1111 - 1507	K3VE..F651		BANDO 4PK1735,TYPE A		9004A-91057-	1		
1507 - 1607	EJVE..F650				9004A-91017-	1		
1507 - 1901	1NRVE..F653				9004A-91067-	1		
1901 -	1NRVE,2NRVE..F65#				9004A-91067-	1		
	+----------+							
	| 88310A | BELT, V (COOLER COMPRESSOR TO CRANKSHAFT PULLEY), NO.1							
	+----------+							
1111 - 1507	F650				90048-32117-	1		
1507 - 1607	F650				90048-32117-	1		

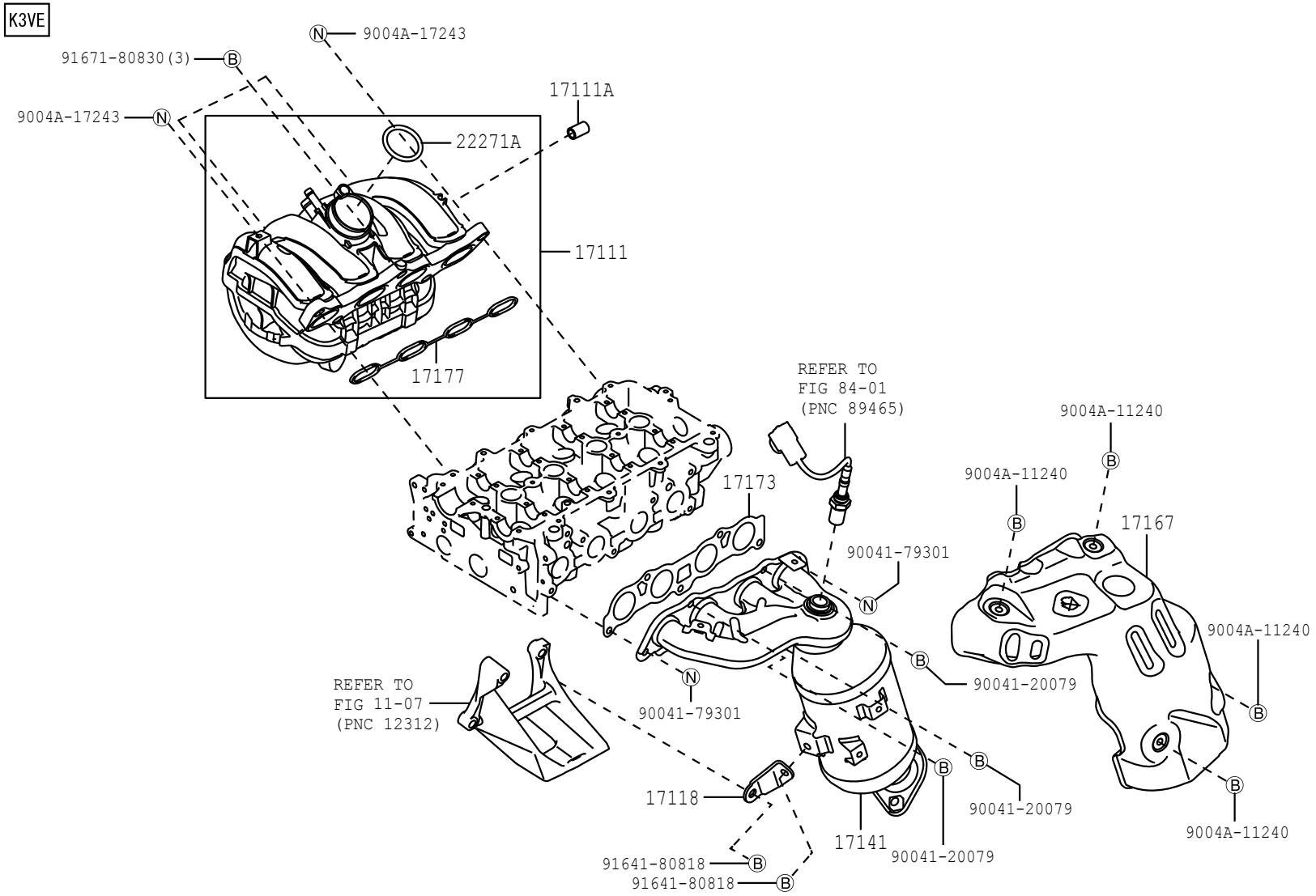

17F1

177414-A

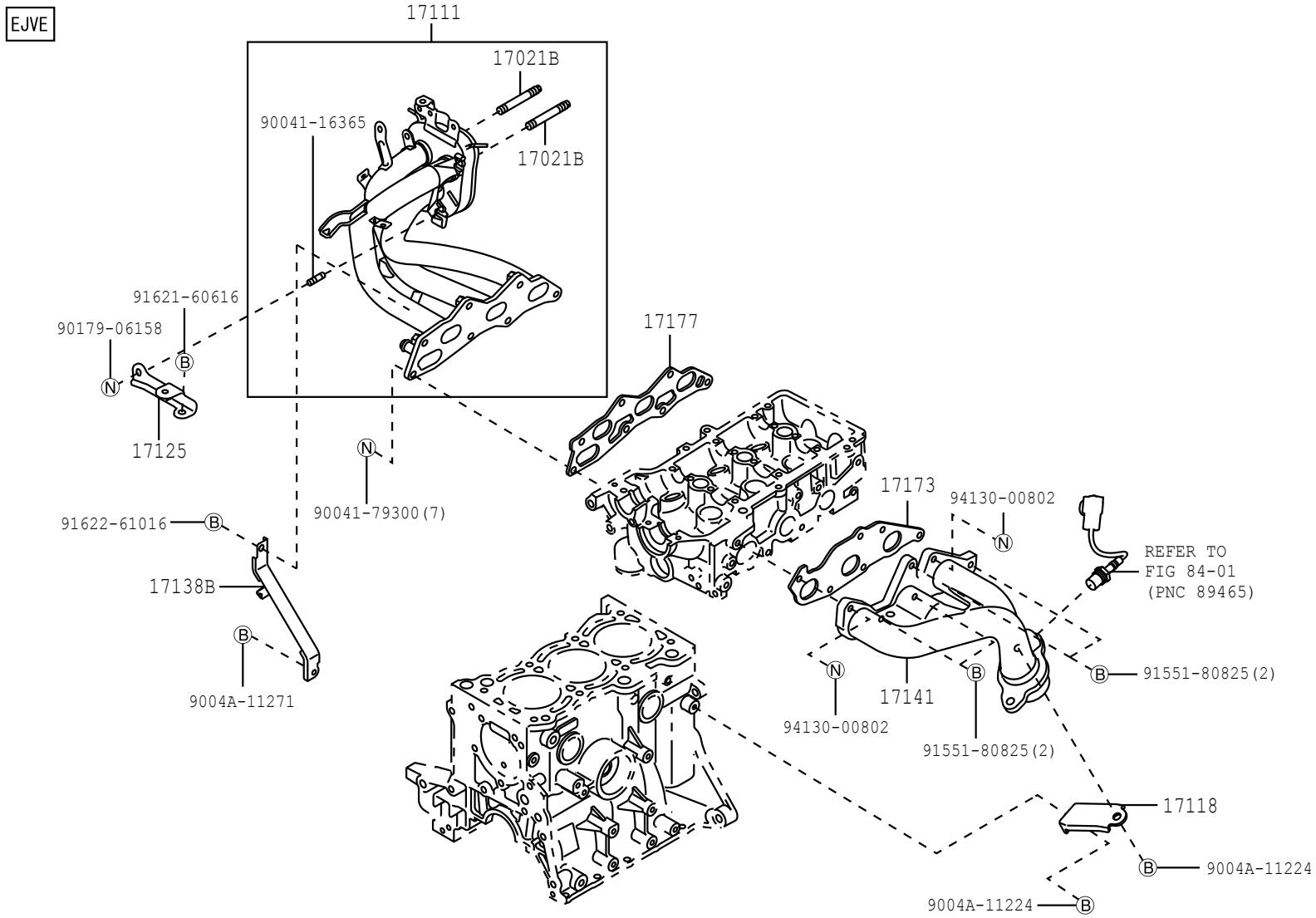

17F1

177415-B

FIG. 17-01 MANIFOLD

(1507-)1NRVE, 2NRVE

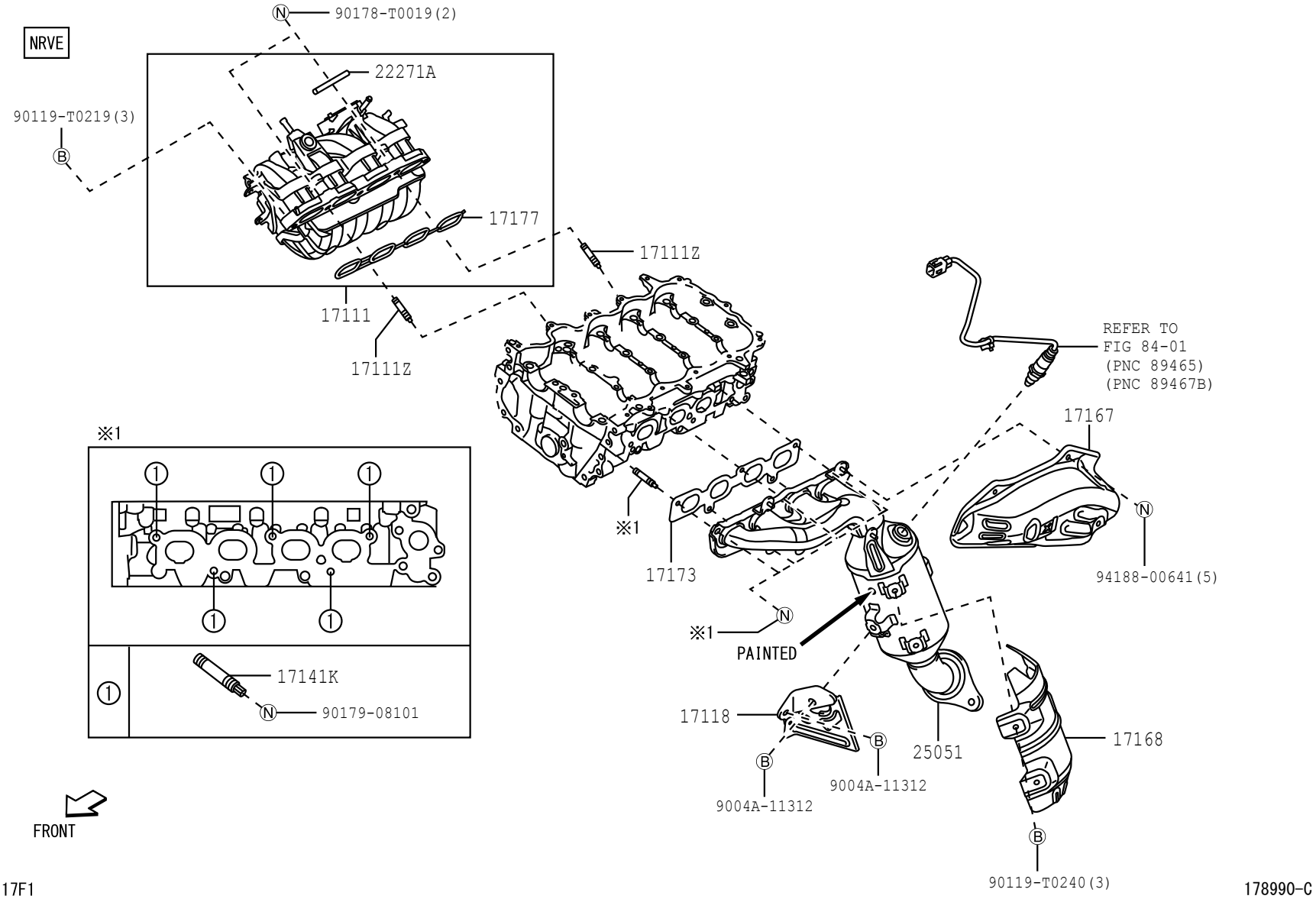

17F1

178990-C

PROD_DATE	MODELS	SPEC CODE	DESCRIPTION	R/P	PART NUMBER	QYT	REV_REF FR	REV_REF TO
	+----------+							
	| 17021B | BOLT, STUD							
	+----------+							
1111 - 1507	EJVE..F650				90041-16395-	2		
1507 - 1607	EJVE..F650				90041-16395-	2		
	+----------+							
	| 17111 | MANIFOLD, INTAKE							
	+----------+							
1111 - 1507	EJVE..F650				17120-B0030-	1		
1111 - 1507	K3VE..F651				17120-BZ040-	1		
				#	(17120-B1020-)	1		
1507 - 1607	EJVE..F650				17120-B0060-	1		
1507 - 1901	1NRVE..F653				17120-BZ100-	1		
1901 -	1NRVE,2NRVE..F65#				17120-BZ100-	1		
	+----------+							
	| 17111A | PLUG, NO.1							
	+----------+							
1111 - 1507	K3VE..F651				90043-39029-	1		
	+----------+							
	| 17111Z | BOLT, STUD(FOR INTAKE MANIFOLD TO CYLINDER HEAD)							
	+----------+							
1507 - 1901	1NRVE..F653				9004A-12001-	2		
1901 -	1NRVE,2NRVE..F65#				9004A-12001-	2		
	+----------+							
	| 17118 | STAY, MANIFO							
	+----------+ LD							
1111 - 1507	EJVE..F650				17118-BZ010-	1		
1111 - 1507	K3VE..F651				17118-BZ030-	1		
1507 - 1607	EJVE..F650				17118-BZ010-	1		
1507 - 1901	1NRVE..F653				17118-BZ130-	1		
1901 -	1NRVE,2NRVE..F65#				17118-BZ130-	1		
	+----------+							
	| 17125 | STAY, SURGE TANK, NO.1							
	+----------+							
1111 - 1507	EJVE..F650				17125-BZ010-	1		
1507 - 1607	EJVE..F650				17125-BZ010-	1		

FIG.17-01 MANIFOLD

PROD_DATE	MODELS	SPEC CODE	DESCRIPTION	R/P	PART NUMBER	QYT	REV_REF FR	REV_REF TO
	+----------+							
	| 17138B | STAY, INTAKE MANIFOLD							
	+----------+							
1111 - 1507	EJVE..F650				17138-BZ060-	1		
1507 - 1607	EJVE..F650				17138-BZ060-	1		
	+----------+							
	| 17141 | MANIFOLD, EXHAUST							
	+----------+							
1111 - 1507	K3VE..F651				17140-BZ180-	1		
1111 - 1507	EJVE..F650				17141-BZ020-	1		
1507 - 1607	EJVE..F650				17141-BZ020-	1		
	+----------+							
	| 17141K | BOLT, STUD(FOR EXHAUST MANIFOLD TO CYLINDER HEAD)							
	+----------+							
1507 - 1901	1NRVE..F653				90126-08063-	5		
1901 -	1NRVE,2NRVE..F65#				90126-08063-	5		
	+----------+							
	| 17167 | INSULATOR, EXHAUST MANIFOLD HEAT, NO.1							
	+----------+							
1111 - 1507	K3VE..F651				17167-B0021-	1		
1507 - 1901	1NRVE..F653				17167-BZ070-	1		
1901 -	1NRVE,2NRVE..F65#				17167-BZ070-	1		
	+----------+							
	| 17168 | INSULATOR, EXHAUST MANIFOLD HEAT, NO.2							
	+----------+							
1507 - 1901	1NRVE..F653				17168-BZ020-	1		
1901 -	1NRVE,2NRVE..F65#				17168-BZ020-	1		
	+----------+							
	| 17173 | GASKET, EXHAUST MANIFOLD TO HEAD							
	+----------+							
1111 - 1507	EJVE..F650				17173-87229-	1		
1111 - 1507	K3VE..F651				17173-BZ020-	1		
				#	(17173-97401-)	1		
1507 - 1607	EJVE..F650				17173-87229-	1		
1507 - 1901	1NRVE..F653				17173-BZ070-	1		
1901 -	1NRVE,2NRVE..F65#				17173-BZ070-	1		

FIG.17-01 MANIFOLD

PROD_DATE	MODELS	SPEC CODE	DESCRIPTION	R/P	PART NUMBER	QYT	REV_REF FR	REV_REF TO
	+----------+							
	| 17177 | GASKET, INTAKE MANIFOLD TO HEAD, NO.1							
	+----------+							
1111 - 1507	EJVE..F650				17177-B0020-	1		
1111 - 1507	K3VE..F651				17177-B1020-	1		
1507 - 1607	EJVE..F650				17177-B0020-	1		
1507 - 1901	1NRVE..F653				17177-BZ030-	1		
1901 -	1NRVE,2NRVE..F65#				17177-BZ030-	1		
	+----------+							
	| 22271A | GASKET, THROTTLE BODY							
	+----------+							
1111 - 1507	K3VE..F651				90043-01321-	1		
1507 - 1901	1NRVE..F653				22271-0Y030-	1		
1901 -	1NRVE,2NRVE..F65#				22271-0Y030-	1		
	+----------+							
	| 25051 | CONVERTER SUB-ASSY, EXHAUST MANIFOLD							
	+----------+							
1507 - 1810	1NRVE..F653		PAINTED=PINK		25051-BZ010-	1		
1810 - 1901	1NRVE..F653		PAINTED=YELLOW		25051-BZ110-	1		
1901 -	1NRVE,2NRVE..F65#		PAINTED=YELLOW		25051-BZ110-	1		

FIG.17-02 EXHAUST PIPE

(1111-1507)K3VE

K3VE

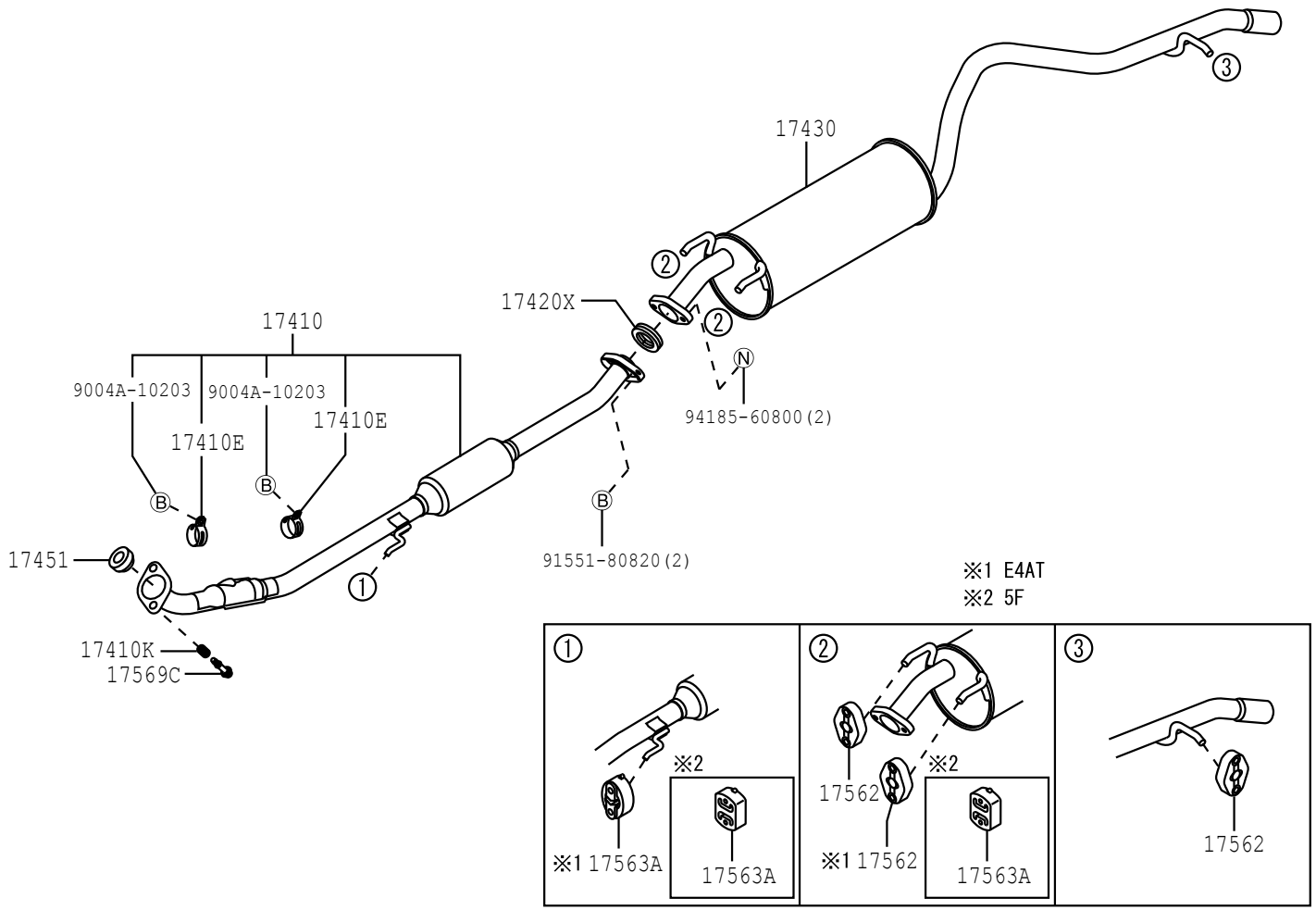

1702

177421-A

FIG.17-02 EXHAUST PIPE

(1111-1507)EJVE

EJVE

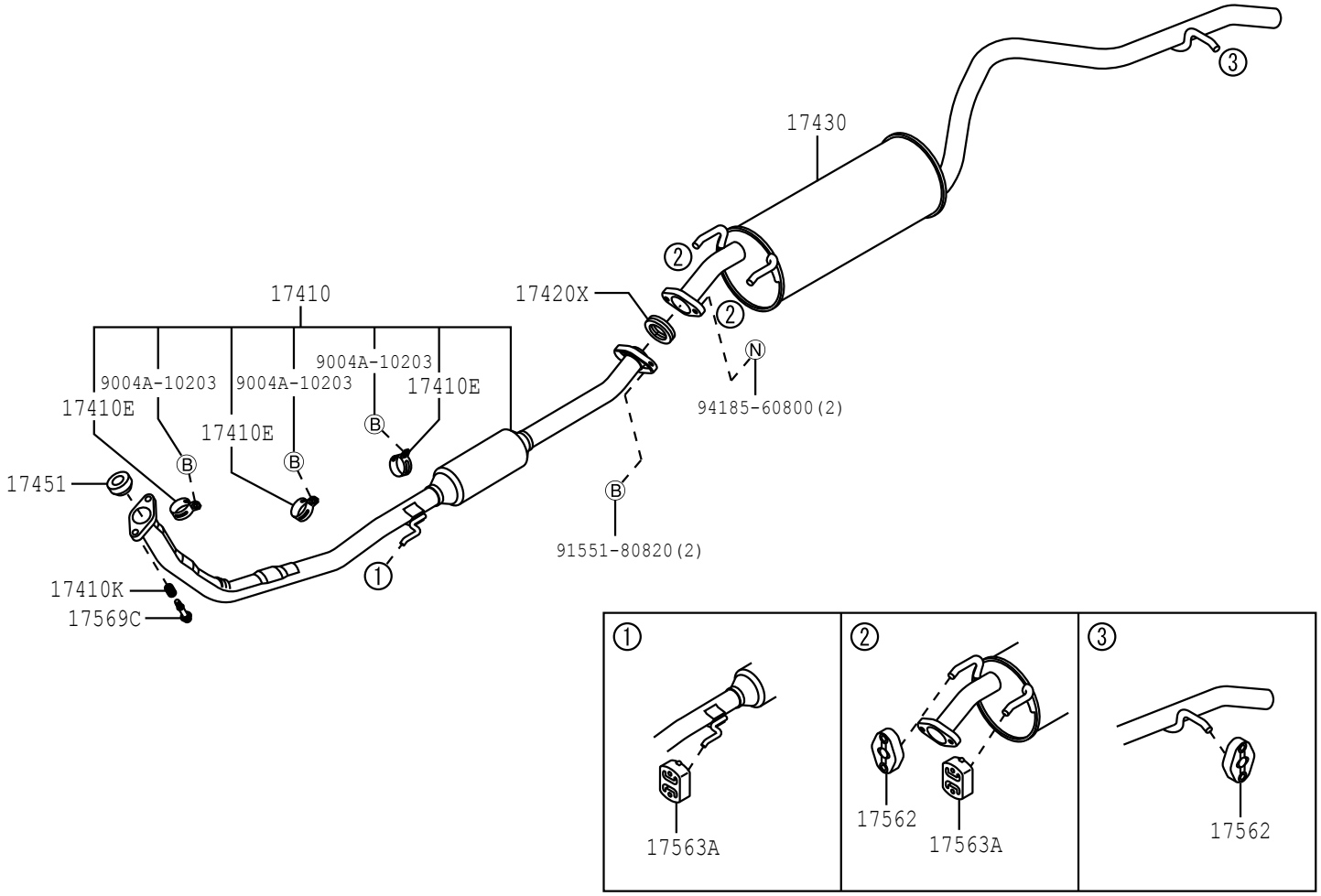

177423-A

FIG. 17-02 EXHAUST PIPE

(1507-) 1NRVE, 2NRVE

NRVE

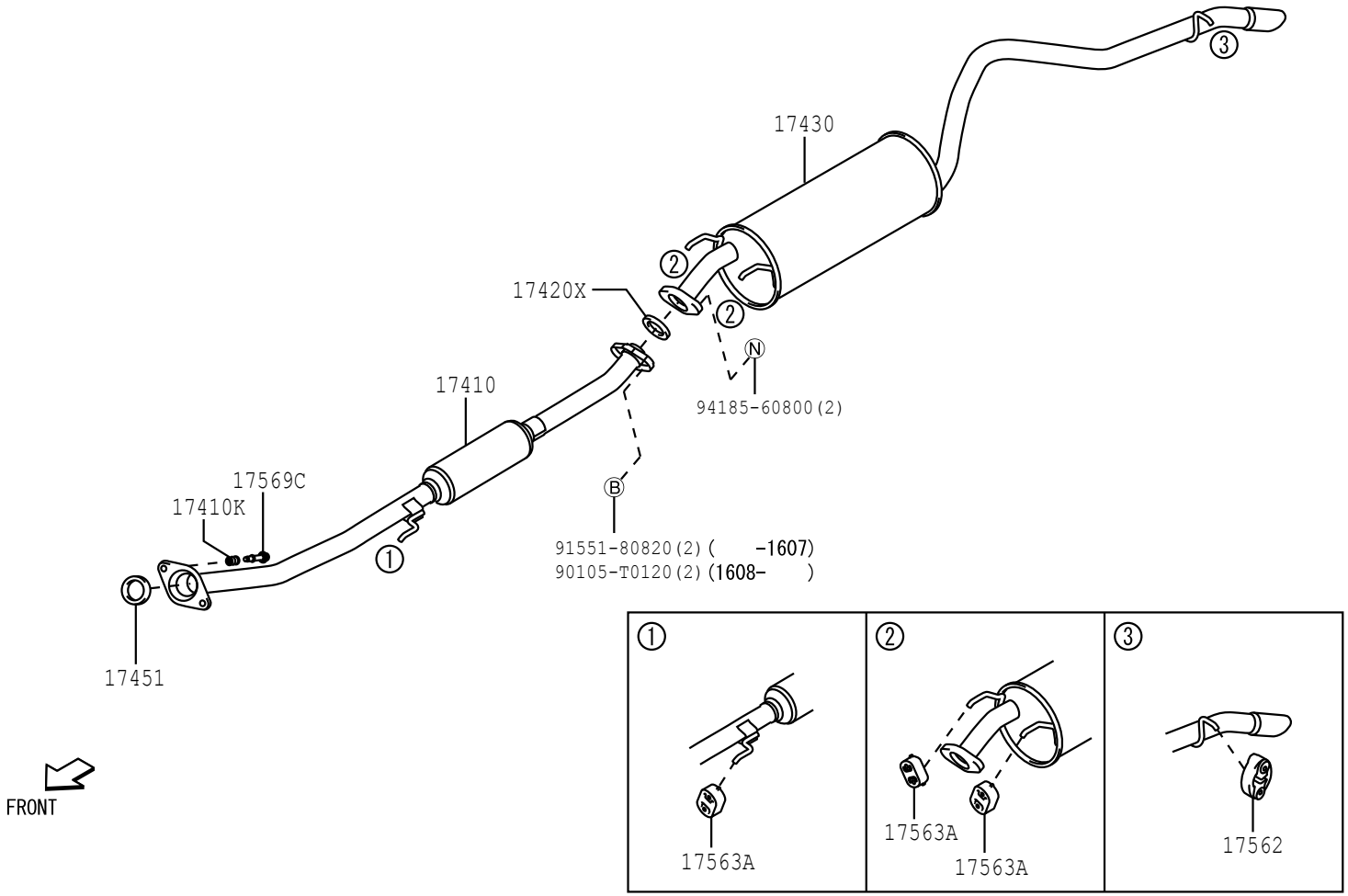

1702

178966-B

EJVE

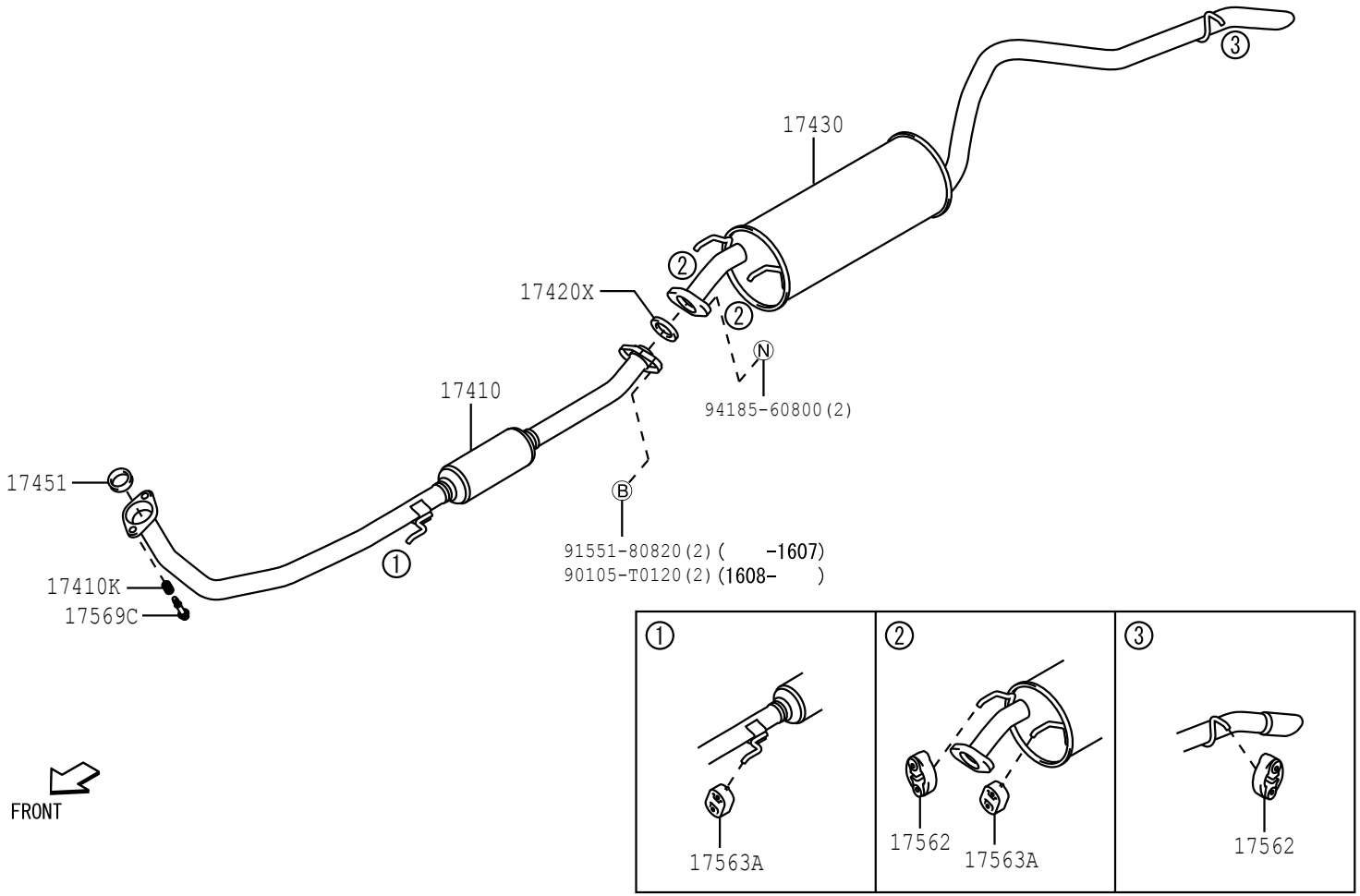
17430
17420X
17410
17451
17410K
17569C
94185-60800(2)
91551-80820(2)(-1607)
90105-T0120(2)(1608-)
FRONT
17563A
17562
17563A
17562

PROD_DATE	MODELS	SPEC CODE	DESCRIPTION	R/P	PART NUMBER	QYT	REV_REF FR	REV_REF TO
	+----------+							
	| 17410 | PIPE ASSY, EXHAUST, FRONT							
	+----------+							
1111 - 1507	EJVE..F650				17410-BZ410-	1		
1111 - 1507	K3VE..F651				17410-BZ420-	1		
1507 - 1607	EJVE..F650				17410-BZ630-	1		
1507 - 1810	1NRVE..F653		ID NO. = 3BZ14,PAINTED=BLACK		17410-BZ640-	1		
1810 - 1901	1NRVE..F653		ID NO. = BZ150,PAINTED=YELLOW		17410-BZ830-	1		
1901 -	1NRVE,2NRVE..F65#		ID NO. = BZ150,PAINTED=YELLOW		17410-BZ830-	1		
	+----------+							
	| 17410E | CLAMP NO.1, EXHAUST PIPE FRONT (FOR FRONT							
	+----------+)							
1111 - 1507	K3VE..F651				90461-12418-	2		
1111 - 1507	EJVE..F650				90461-12418-	3		
	+----------+							
	| 17410K | SPRING, EXHAUST PIPE							
	+----------+							
1111 - 1507	K3VE,EJVE..F65#				17152-BZ010-	2		
1507 - 1607	EJVE..F650				17152-BZ010-	2		
1507 - 1901	1NRVE..F653				17152-B1010-	2		
1901 -	1NRVE,2NRVE..F65#				17152-B1010-	2		
	+----------+							
	| 17420X | GASKET, EXHAUST PIPE, CENTER							
	+----------+							
1111 - 1507	K3VE,EJVE..F65#				17451-BZ010-	1		
				#	(90917-06039-)	1		
1507 - 1607	EJVE..F650				17451-BZ010-	1		
				#	(90917-06039-)	1		
1507 - 1901	1NRVE..F653				17451-BZ010-	1		
				#	(90917-06039-)	1		
1901 -	1NRVE,2NRVE..F65#				17451-BZ010-	1		
				#	(90917-06039-)	1		

FIG.17-02 EXHAUST PIPE

PROD_DATE	MODELS	SPEC CODE	DESCRIPTION	R/P	PART NUMBER	QYT	REV_REF FR	REV_REF TO
	+----------+							
	| 17430 | PIPE ASSY, EXHAUST, TAIL							
	+----------+							
1111 - 1507	EJVE..F650				17430-BZ250-	1		
1111 - 1507	K3VE..F651				17430-BZ290-	1		
1507 - 1607	EJVE..F650				17430-BZ380-	1		
1507 - 1901	1NRVE..F653				17430-BZ340-	1		
1901 -	1NRVE,2NRVE..F65#				17430-BZ340-	1		
	+----------+							
	| 17451 | GASKET, EXHAUST PIPE							
	+----------+							
1111 - 1507	K3VE,EJVE..F65#				17451-B0010-	1		
1507 - 1607	EJVE..F650				17451-B0010-	1		
1507 - 1901	1NRVE..F653				17451-21030-	1		
1901 -	1NRVE,2NRVE..F65#				17451-21030-	1		
	+----------+							
	| 17562 | SUPPORT, EXHAUST PIPE, NO.2							
	+----------+							
1111 - 1507	K3VE,EJVE..F65#..5F				17567-87703-	2		
1111 - 1507	K3VE..F651..E4AT				17567-87703-	3		
1507 - 1607	EJVE..F650				17567-87703-	2		
1507 - 1901	1NRVE..F653				17567-87703-	1		
	+----------+							
	| 17563A | SUPPORT, EXHAUST PIPE, NO.3							
	+----------+							
1111 - 1507	K3VE,EJVE..F65#..5F				17567-BZ030-	2		
				#	(17567-87210-)	1		
1111 - 1507	K3VE..F651..E4AT				17567-BZ040-	1		
1507 - 1607	EJVE..F650				17567-BZ030-	2		
				#	(17567-87210-)	1		
1507 - 1901	1NRVE..F653				17567-BZ030-	3		
				#	(17567-87210-)	1		
1901 - 2004	1NRVE,2NRVE..F65#				17567-BZ030-	4		
				#	(17567-87210-)	1		
2005 -	1NRVE,2NRVE..F65#				17567-BZ031-	4		

FIG.17-02 EXHAUST PIPE

PROD_DATE	MODELS	SPEC CODE	DESCRIPTION	R/P	PART NUMBER	QYT	REV_REF FR	REV_REF TO
	+----------+ | 17569C | BOLT, EXHAUST PIPE SUPPORT +----------+							
1111 - 1507	K3VE,EJVE..F65#				90901-05026-	2		
1507 - 1508	EJVE..F650				90901-05026-	2		
1509 - 1607	EJVE..F650				9004A-10221-	2		
				#	(90901-05026-)	1		
1507 - 1901	1NRVE..F653				17569-97501-	2		
1901 -	1NRVE,2NRVE..F65#				17569-97501-	2		

(1111-1507)K3VE

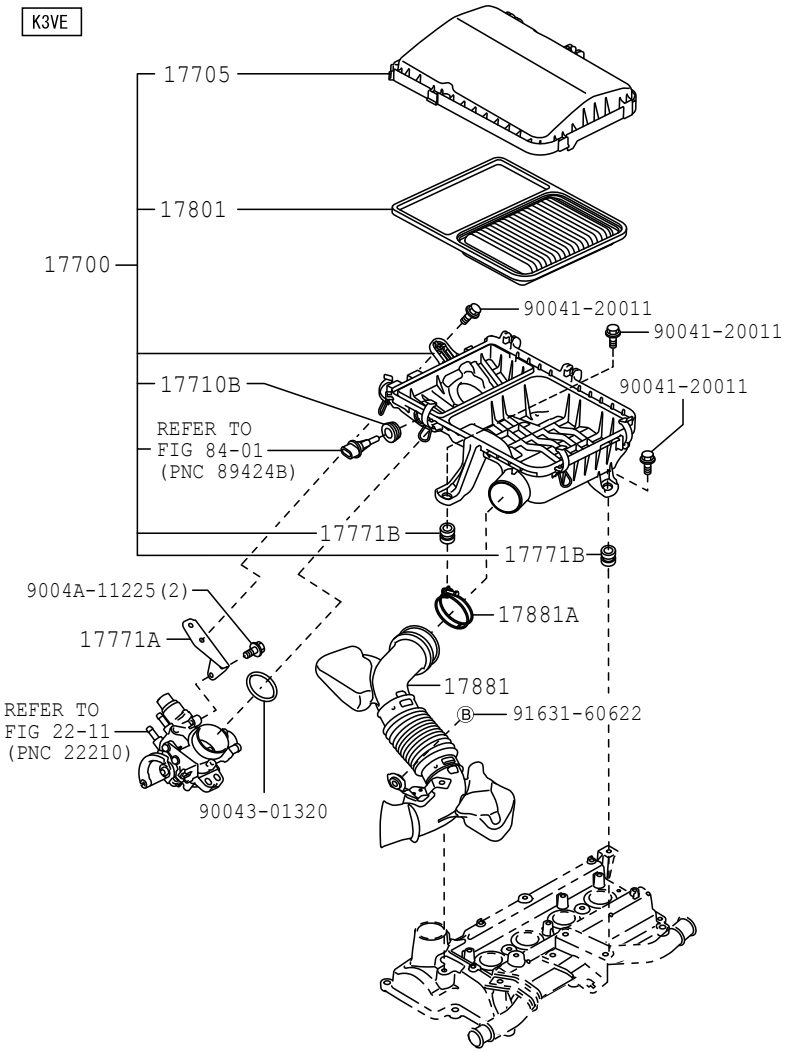

17F3

177419-A

FIG. 17-03 AIR CLEANER

(1111-1507)EJVE

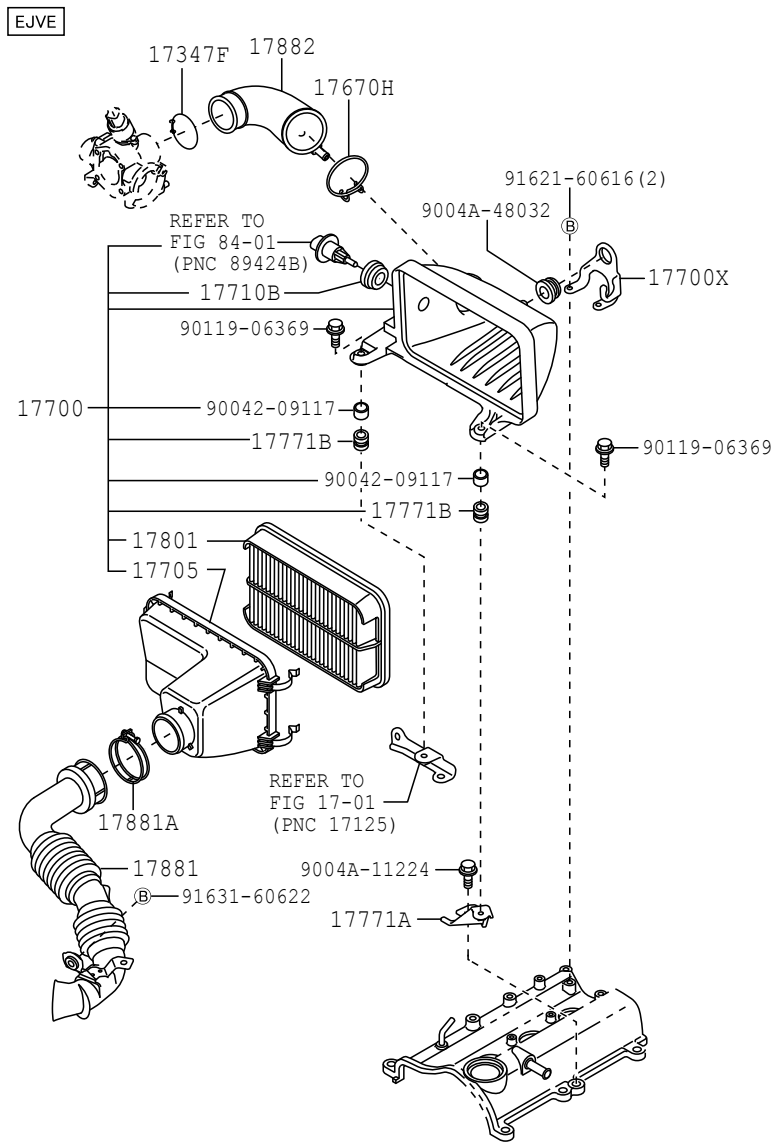

17F3

177420-A

(1507-) 1NRVE, 2NRVE

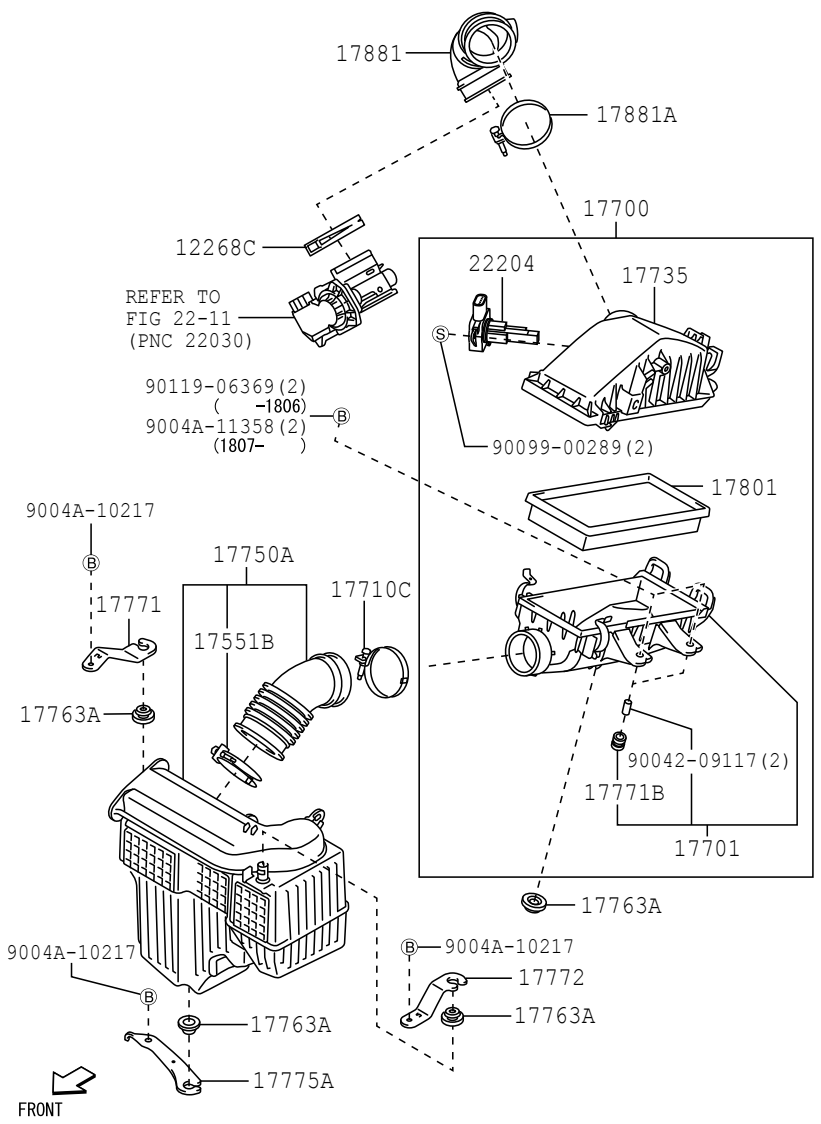

(1507-1607) EJVE

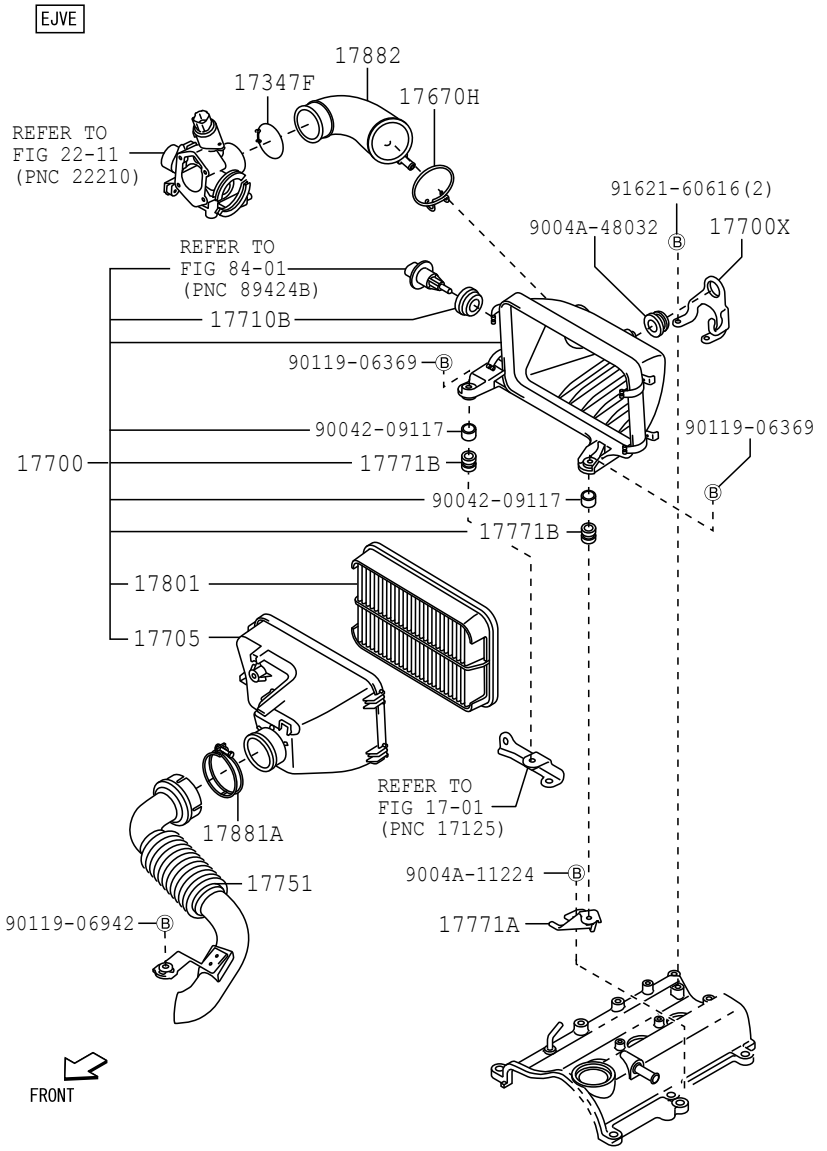

PROD_DATE	MODELS	SPEC CODE	DESCRIPTION	R/P	PART NUMBER	QYT	REV_REF FR	REV_REF TO
	+----------+							
	| 12268C | CLIP, HOSE							
	+----------+							
1507 - 1901	1NRVE..F653				90466-62002-	1		
1901 -	1NRVE,2NRVE..F65#				90466-62002-	1		
	+----------+							
	| 17347F | CLAMP OR CLIP(FOR AIR HOSE)							
	+----------+							
1111 - 1507	EJVE..F650				90044-67433-	1		
1507 - 1607	EJVE..F650				90044-67433-	1		
	+----------+							
	| 17551B | CLAMP(FOR AIR CLEANER INLET, NO.1)							
	+----------+							
1507 - 1901	1NRVE..F653				9004A-46128-	1		
1901 -	1NRVE,2NRVE..F65#				9004A-46128-	1		
	+----------+							
	| 17670H | CLIP(FOR AIR HOSE NO.2)							
	+----------+							
1111 - 1507	EJVE..F650				90044-67420-	1		
1507 - 1607	EJVE..F650				90044-67420-	1		
	+----------+							
	| 17700 | CLEANER ASSY, AIR							
	+----------+							
1111 - 1409	K3VE..F651				17700-BZ071-	1		
				#	(17700-BZ190-)	1		
1111 - 1507	EJVE..F650				17700-BZ090-	1		
1409 - 1507	K3VE..F651				17700-BZ190-	1		
1507 - 1607	EJVE..F650				17700-BZ200-	1		
1507 - 1901	1NRVE..F653				17700-BZ170-	1		
1901 -	1NRVE,2NRVE..F65#				17700-BZ170-	1		
	+----------+							
	| 17700X | BRACKET, AIR CLEANER							
	+----------+							
1111 - 1507	EJVE..F650				17772-BZ010-	1		
1507 - 1607	EJVE..F650				17772-BZ010-	1		

FIG.17-03 AIR CLEANER

PROD_DATE	MODELS	SPEC CODE	DESCRIPTION	R/P	PART NUMBER	QYT	REV_REF FR	REV_REF TO
	+----------+							
	| 17701 | CASE SUB-ASSY, AIR CLEANER							
	+----------+							
1507 - 1901	1NRVE..F653				17701-BZ160-	1		
1901 -	1NRVE,2NRVE..F65#				17701-BZ160-	1		
	+----------+							
	| 17705 | CAP SUB-ASSY, AIR CLEANER							
	+----------+							
1111 - 1507	EJVE..F650				17705-BZ010-	1		
1111 - 1507	K3VE..F651				17705-BZ071-	1		
1507 - 1607	EJVE..F650				17705-BZ180-	1		
	+----------+							
	| 17710B | GROMMET							
	+----------+							
1111 - 1507	K3VE,EJVE..F65#				90044-80530-	1		
1507 - 1607	EJVE..F650				90044-80530-	1		
	+----------+							
	| 17710C | CLAMP(FOR AIR CLEANER INLET DUCT)							
	+----------+							
1507 - 1901	1NRVE..F653				9004A-46128-	1		
1901 -	1NRVE,2NRVE..F65#				9004A-46128-	1		
	+----------+							
	| 17735 | CAP, AIR CLEANER							
	+----------+							
1507 - 1901	1NRVE..F653				17735-BZ030-	1		
1901 -	1NRVE,2NRVE..F65#				17735-BZ030-	1		
	+----------+							
	| 17750A | INLET ASSY, AIR CLEANER							
	+----------+							
1507 - 1901	1NRVE..F653				17750-BZ010-	1		
1901 -	1NRVE,2NRVE..F65#				17750-BZ010-	1		
	+----------+							
	| 17751 | INLET, AIR CLEANER, NO.1							
	+----------+							
1507 - 1607	EJVE..F650				17751-BZ070-	1		
	+----------+							
	| 17763A | GROMMET, AIR CLEANER INLET DUCT							
	+----------+							
1507 - 1901	1NRVE..F653				9004A-48060-	4		

PROD_DATE	MODELS	SPEC CODE	DESCRIPTION	R/P	PART NUMBER	QYT	REV_REF FR	REV_REF TO
	+----------+							
	| 17763A | GROMMET, AIR CLEANER INLET DUCT							
	CONTINUED--+							
1901 -	1NRVE,2NRVE..F65#				9004A-48060-	4		
	+----------+							
	| 17771 | BRACKET, AIR CLEANER INLET DUCT							
	+----------+							
1507 - 1901	1NRVE..F653				17771-BZ080-	1		
1901 -	1NRVE,2NRVE..F65#				17771-BZ080-	1		
	+----------+							
	| 17771A | BRACKET, AIR CLEANER							
	+----------+							
1111 - 1507	K3VE..F651				17771-BZ090-	1		
1111 - 1507	EJVE..F650				17771-BZ100-	1		
1507 - 1607	EJVE..F650				17771-BZ100-	1		
	+----------+							
	| 17771B | GROMMET(FOR AIR CLEANER BRACKET)							
	+----------+							
1111 - 1507	K3VE,EJVE..F65#				90044-80392-	2		
1507 - 1901	EJVE,1NRVE..F65#				90044-80392-	2		
1901 -	1NRVE,2NRVE..F65#				90044-80392-	2		
	+----------+							
	| 17772 | BRACKET, INTAKE AIR CONNECTOR, NO.2							
	+----------+							
1507 - 1901	1NRVE..F653				17772-BZ030-	1		
1901 -	1NRVE,2NRVE..F65#				17772-BZ030-	1		
	+----------+							
	| 17775A | BRACKET, AIR CLEANER PIPE, NO.3							
	+----------+							
1507 - 1901	1NRVE..F653				17775-BZ020-	1		
1901 -	1NRVE,2NRVE..F65#				17775-BZ020-	1		
	+----------+							
	| 17801 | ELEMENT SUB-ASSY, AIR CLEANER FILTER							
	+----------+							
1111 - 1507	EJVE..F650				17801-BZ010-	1		
1111 - 1507	K3VE..F651				17801-BZ050-	1		
1507 - 1511	1NRVE..F653				17801-BZ120-	1		
1507 - 1607	EJVE..F650				17801-BZ010-	1		

FIG.17-03 AIR CLEANER

PROD_DATE	MODELS	SPEC CODE	DESCRIPTION	R/P	PART NUMBER	QYT	REV_REF FR	REV_REF TO
	+----------+							
	| 17801 | ELEMENT SUB-ASSY, AIR CLEANER FILTER							
	CONTINUED--+							
1511 - 1901	1NRVE..F653		W/ PART NUMBER		17801-BZ150-	1		
1511 - 1901	1NRVE..F653		W/PART NUMBER		17801-BZ150-	1		
1901 -	1NRVE,2NRVE..F65#				17801-BZ150-	1		
	+----------+							
	| 17881 | HOSE, AIR CLEANER, NO.1							
	+----------+							
1111 - 1507	EJVE..F650				17881-BZ010-	1		
1111 - 1507	K3VE..F651				17881-BZ070-	1		
1507 - 1901	1NRVE..F653				17881-BZ170-	1		
1901 -	1NRVE,2NRVE..F65#				17881-BZ170-	1		
	+----------+							
	| 17881A | CLAMP(FOR AIR CLEANER HOSE, NO.1)							
	+----------+							
1111 - 1507	K3VE,EJVE..F65#				9004A-46128-	1		
1507 - 1607	EJVE..F650				9004A-46128-	1		
1507 - 1901	1NRVE..F653				9004A-46128-	1		
1901 -	1NRVE,2NRVE..F65#				9004A-46128-	1		
	+----------+							
	| 17882 | HOSE, AIR CLEANER, NO.2							
	+----------+							
1111 - 1507	EJVE..F650				17882-BZ010-	1		
1507 - 1607	EJVE..F650				17882-BZ010-	1		
	+----------+							
	| 22204 | METER SUB-ASSY, INTAKE AIR FLOW							
	+----------+							
1507 - 1901	1NRVE..F653				22204-BZ010-	1		
1901 -	1NRVE,2NRVE..F65#				22204-BZ010-	1		

(1111-1507)K3VE

K3VE

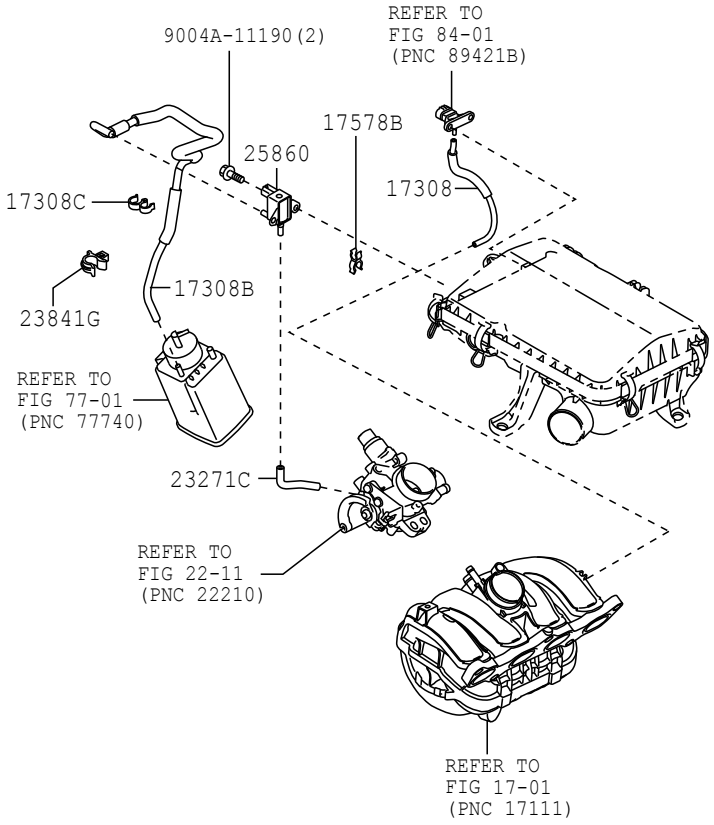

17F8

177425-A

FIG. 17-08 VACUUM PIPING

(1111-1507)EJVE

EJVE

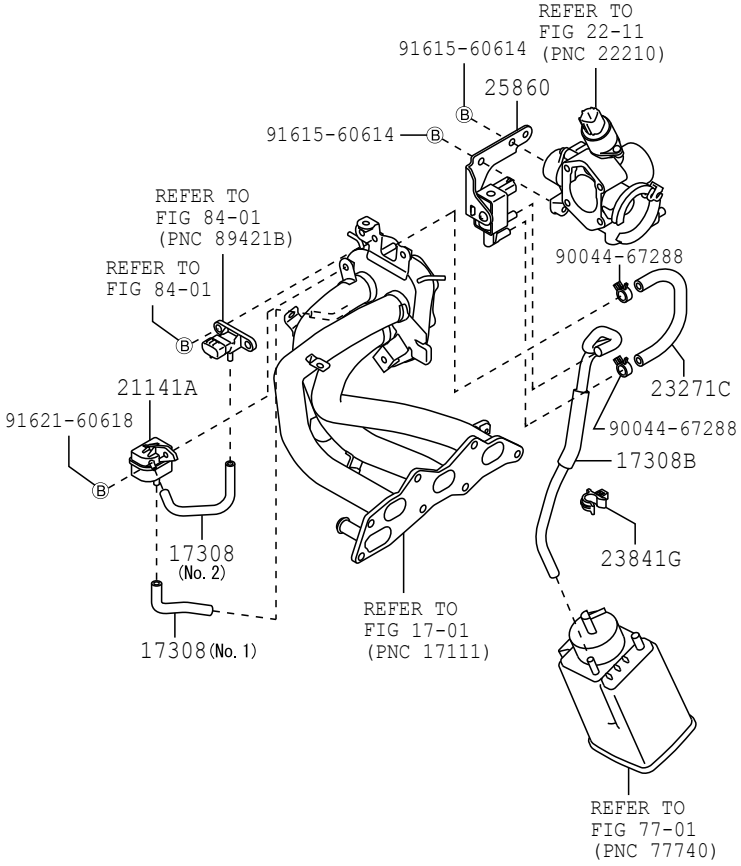

17F8

177426-C

FIG. 17-08 VACUUM PIPING

(1507-) 1NRVE, 2NRVE

NRVE

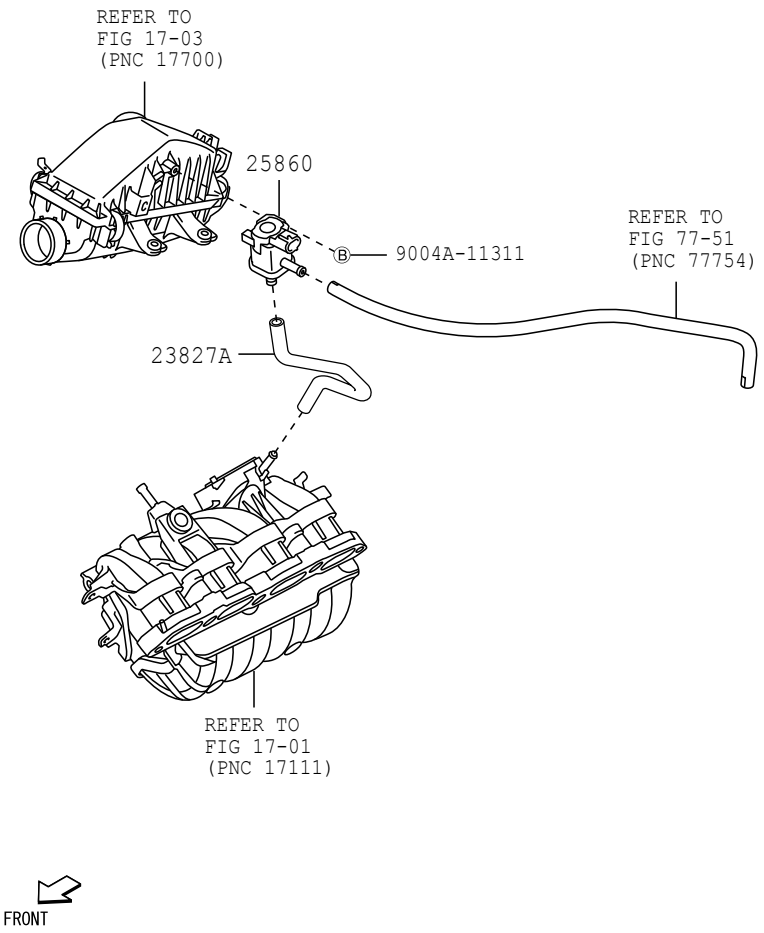

17F8

178963

FIG.17-08 VACUUM PIPING

(1507-1607)EJVE

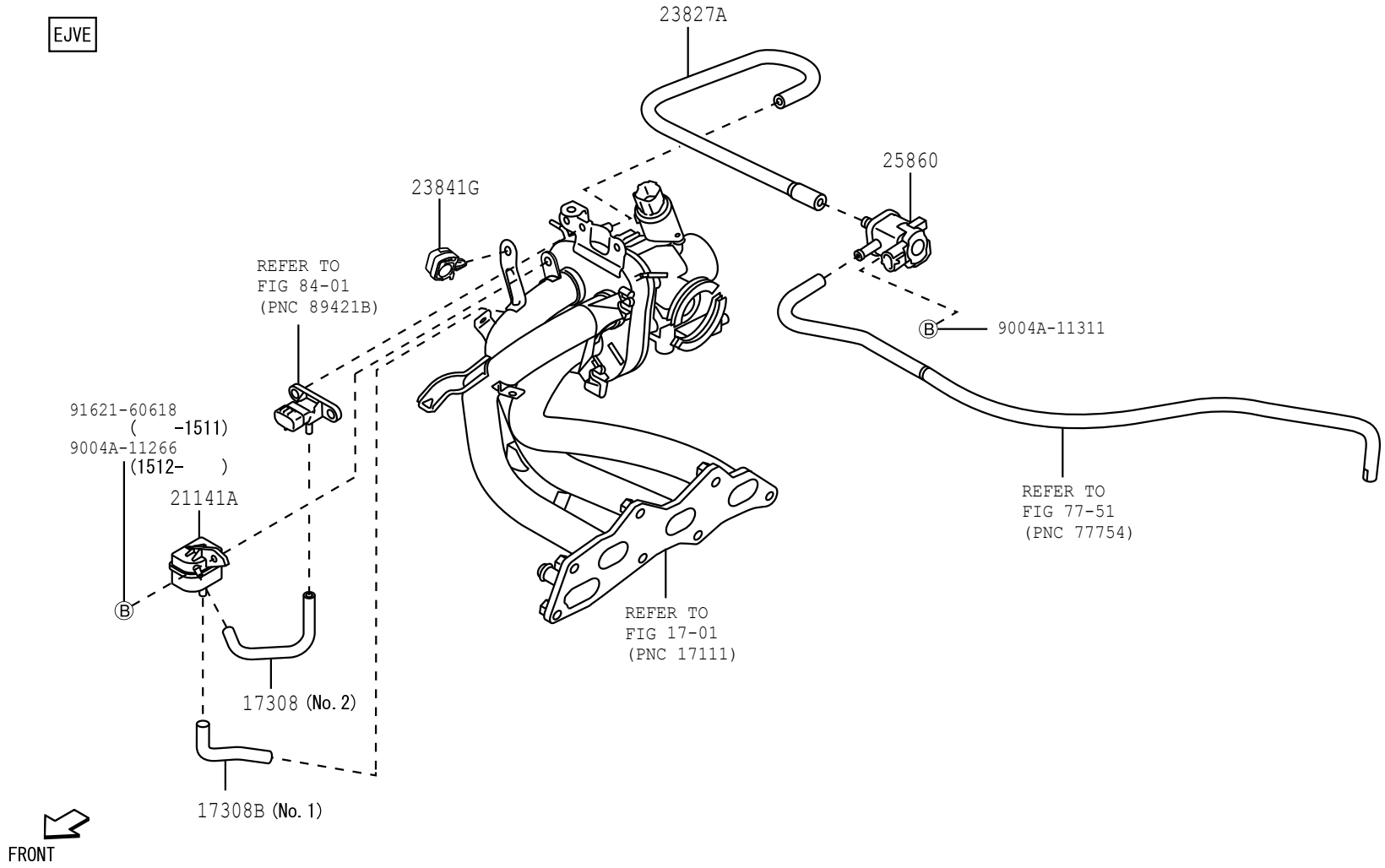

17F8

178964-B

PROD_DATE	MODELS	SPEC CODE	DESCRIPTION	R/P	PART NUMBER	QYT	REV_REF FR	REV_REF TO
	+----------+							
	| 17308 | HOSE SUB-ASSY, VACUUM(FOR IDLE-UP)							
	+----------+							
1111 - 1507	K3VE..F651				44750-B0050-	1		
1111 - 1507	EJVE..F650		*H,L=950,MARK=#*,NO.1		95411-19995-	1		
1111 - 1507	EJVE..F650		*H,L=950,MARK=#*,NO.2		95411-19995-	1		
1507 - 1607	EJVE..F650		*H,L=950,MARK=#*,NO.1		95411-19995-	1		
1507 - 1607	EJVE..F650		*H,L=950,MARK=#*,NO.2		95411-19995-	1		
	+----------+							
	| 17308B | HOSE SUB-ASSY, VACUUM							
	+----------+							
1111 - 1507	EJVE..F650				77795-BZ040-	1		
1111 - 1507	K3VE..F651				77795-BZ050-	1		
	+----------+							
	| 17308C | CLAMP(FOR VACUUM HOSE)							
	+----------+							
1111 - 1507	K3VE..F651				90044-64797-	1		
	+----------+							
	| 17578B | CLAMP, PIPE							
	+----------+							
1111 - 1507	K3VE..F651				90044-64774-	1		
	+----------+							
	| 21141A | CHAMBER, SUCTION							
	+----------+							
1111 - 1507	EJVE..F650				21141-BZ030-	1		
1507 - 1607	EJVE..F650				21141-BZ030-	1		
	+----------+							
	| 23271C | HOSE, FUEL							
	+----------+							
1111 - 1507	EJVE..F650		L=88.5		77754-BZ030-	1		
1111 - 1507	K3VE..F651		L=90		77754-BZ040-	1		
	+----------+							
	| 23827A | HOSE, FUEL VAPOR FEED, NO.2							
	+----------+							
1507 - 1607	EJVE..F650				23827-BZ030-	1		
1507 - 1901	1NRVE..F653				23827-BZ020-	1		

FIG.17-08 VACUUM PIPING

PROD_DATE	MODELS	SPEC CODE	DESCRIPTION	R/P	PART NUMBER	QYT	REV_REF FR	REV_REF TO
	+----------+							
	| 23827A | HOSE, FUEL VAPOR FEED, NO.2							
	CONTINUED--+							
1901 -	1NRVE,2NRVE..F65#				23827-BZ020-	1		
	+----------+							
	| 23841G | CLAMP, FUEL HOSE							
	+----------+							
1111 - 1507	K3VE,EJVE..F65#				90044-64759-	1		
1507 - 1607	EJVE..F650				90044-69001-	1		
	+----------+							
	| 25860 | VALVE ASSY, VACUUM SWITCHING, NO.1							
	+----------+							
1111 - 1507	EJVE..F650				17660-BZ010-	1		
1111 - 1507	K3VE..F651				89470-BZ020-	1		
				#	(17650-97207-)	1		
1507 - 1607	EJVE..F650				9004A-91069-	1		
1507 - 1901	1NRVE..F653				9004A-91069-	1		
1901 -	1NRVE,2NRVE..F65#				9004A-91069-	1		

FIG.17-09 CAUTION PLATE & NAME PLATE (ENGINE)

(1111-)

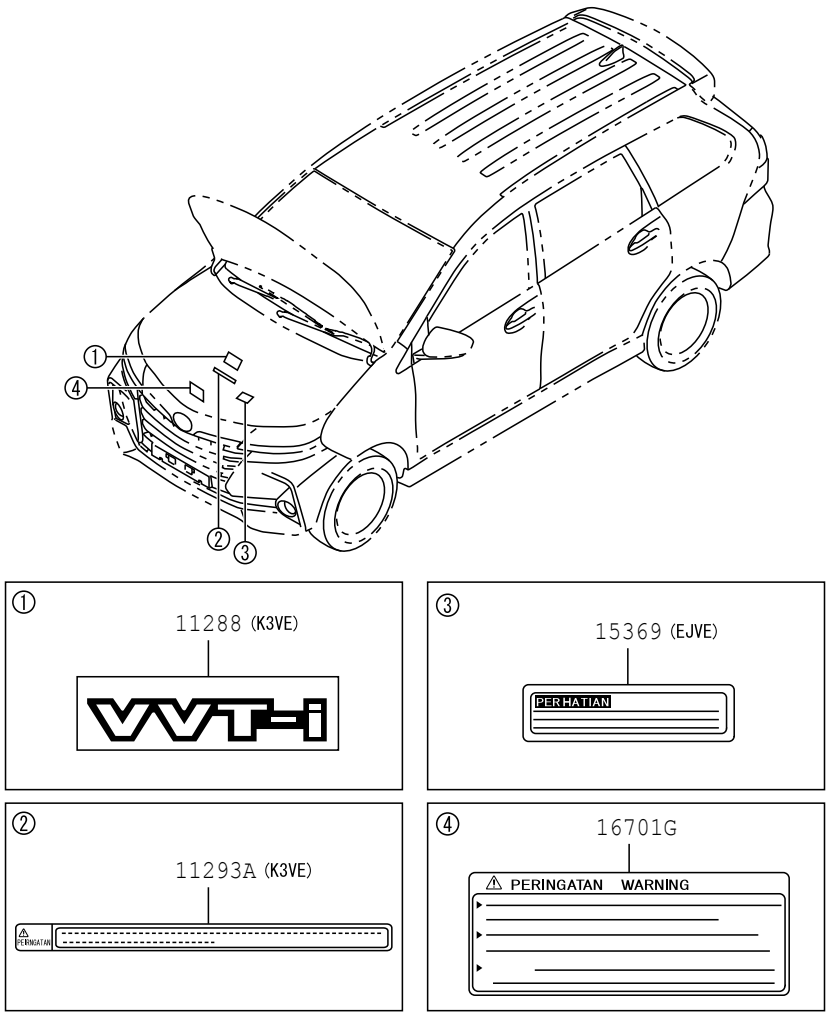

1709

177405-C

FIG.17-09 CAUTION PLATE & NAME PLATE (ENGINE)

PROD_DATE	MODELS	SPEC CODE	DESCRIPTION	R/P	PART NUMBER	QYT	REV_REF FR	REV_REF TO
	+----------+							
	| 11288 | PLATE, ENGINE SYSTEM							
	+----------+							
1111 - 1507	K3VE..F651				11288-BZ010-	1		
	+----------+							
	| 11293A | PLATE, ENGINE CAUTION							
	+----------+							
1111 - 1507	K3VE..F651				11293-BZ410-	1		
	+----------+							
	| 15369 | PLATE, ENGINE OIL CAUTION							
	+----------+							
1111 - 1507	EJVE..F650				15369-BZ010-	1		
1507 - 1607	EJVE..F650				15369-BZ010-	1		
	+----------+							
	| 16701G | LABEL, CAUTI							
	+----------+ ON							
1111 - 1507	K3VE,EJVE..F65#		TYPE B		11293-BZ100-	1		
1507 - 1901	EJVE,1NRVE..F65#		TYPE B		11293-BZ100-	1		
1901 -	1NRVE,2NRVE..F65#		TYPE B		11293-BZ100-	1		

FIG.19-01 IGNITION COIL & SPARK PLUG / GLOW PLUG

(1111-1404)K3VE

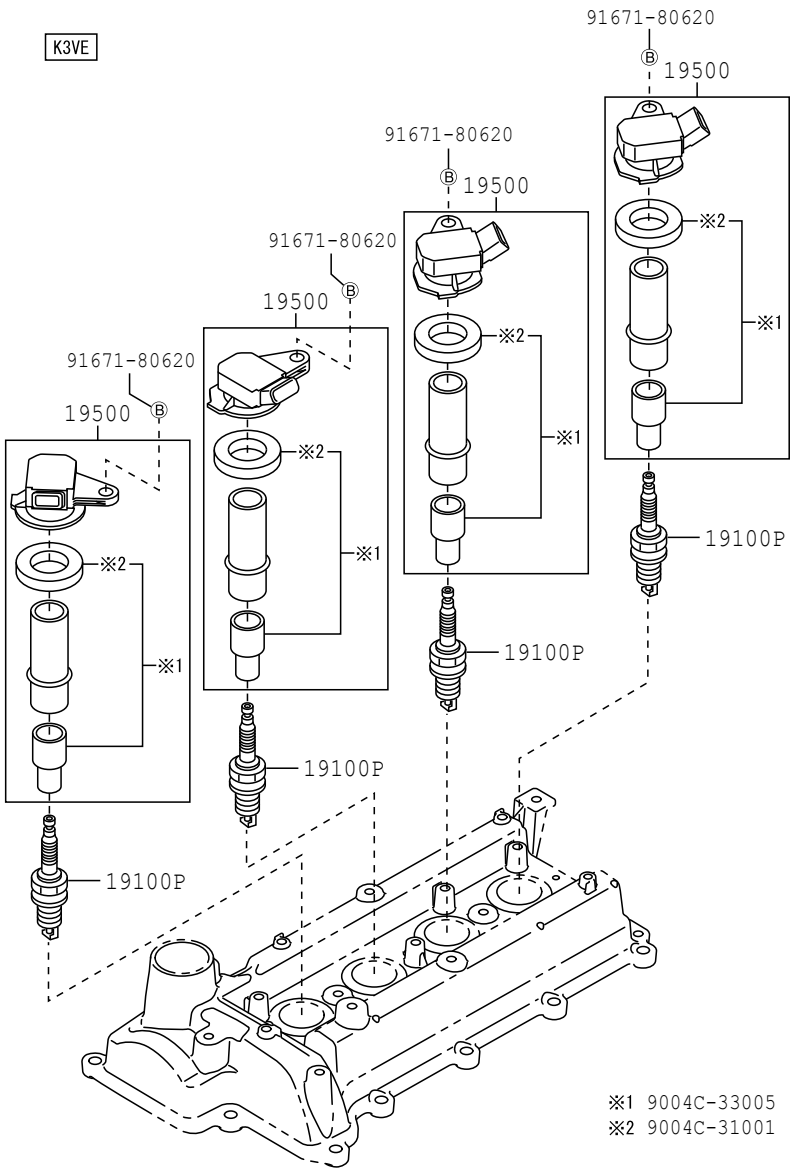

19F1

193817-B

FIG.19-01 IGNITION COIL & SPARK PLUG / GLOW PLUG

(1111-1607)EJVE

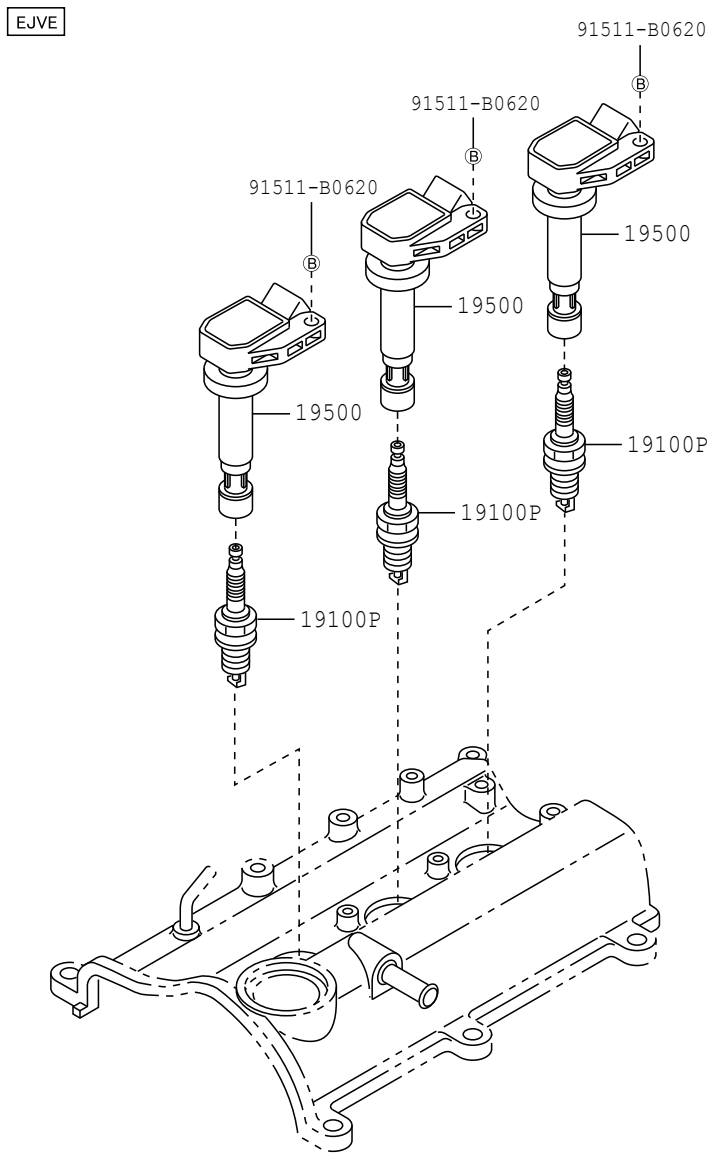

19F1

193818

(1404-1507) K3VE

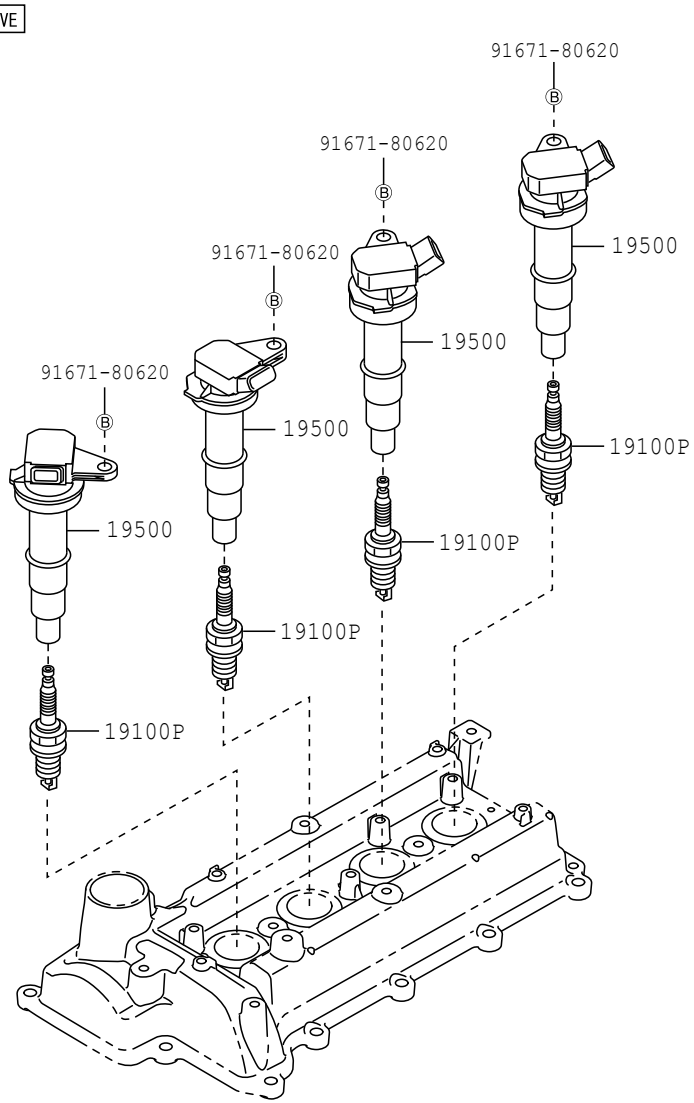

19F1 194333

(1507-) 1NRVE, 2NRVE

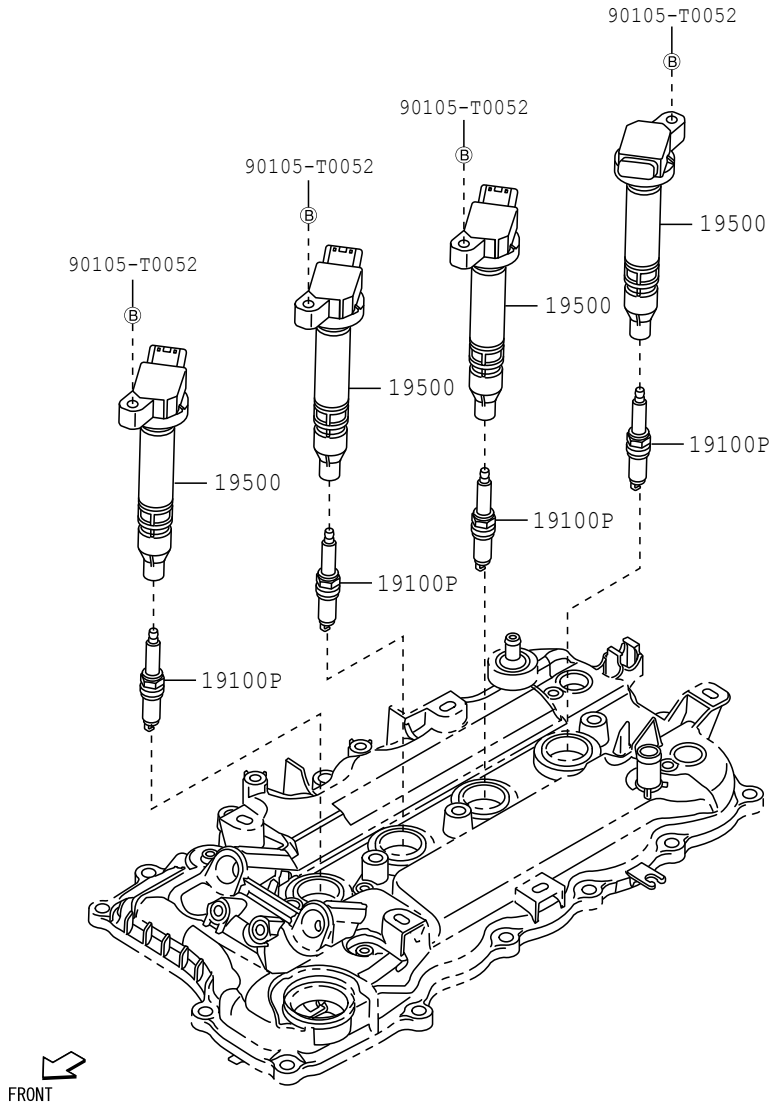

19F1 194641

FIG.19-01 IGNITION COIL & SPARK PLUG / GLOW PLUG

PROD_DATE	MODELS	SPEC CODE	DESCRIPTION	R/P	PART NUMBER	QYT	REV_REF FR	REV_REF TO
	+----------+ | 19100P | PLUG, SPARK +----------+							
1111 - 1507	EJVE..F650		K16PR-U11		9004A-91014-	3		
1111 - 1507	EJVE..F650		BKR5E-11		9004A-91015-	3		
1111 - 1507	K3VE..F651		XU22PR9		9004A-91032-	4		
				#	(90048-51197-)	1		
1111 - 1507	K3VE..F651		DCPR7EA-9		9004A-91039-	4		
				#	(90048-51196-)	1		
1507 - 1607	EJVE..F650		K16PR-U11		9004A-91014-	3		
1507 - 1607	EJVE..F650		BKR5E-11		9004A-91015-	3		
1507 - 1901	1NRVE..F653		SC16HR11		9004A-91068-	4		
				#	(90919-01275-)	1		
1901 -	1NRVE,2NRVE..F65#		SC16HR11		9004A-91068-	4		
				#	(90919-01275-)	1		
	+----------+ | 19500 | COIL ASSY, IGNITION +----------+							
1111 - 1403	K3VE..F651				19070-BZ060-	4		
				#	(19070-BZ031-)	1		
1111 - 1507	EJVE..F650				19070-BZ010-	3		
1404 - 1507	K3VE..F651				19070-BZ030-	4		
				#	(19070-BZ031-)	1		
1507 - 1607	EJVE..F650				19070-BZ010-	3		
1507 - 1901	1NRVE..F653				9004A-19002-	4		
1901 -	1NRVE,2NRVE..F65#				9004A-19002-	4		

FIG.19-03 ALTERNATOR

(1111-1507)K3VE

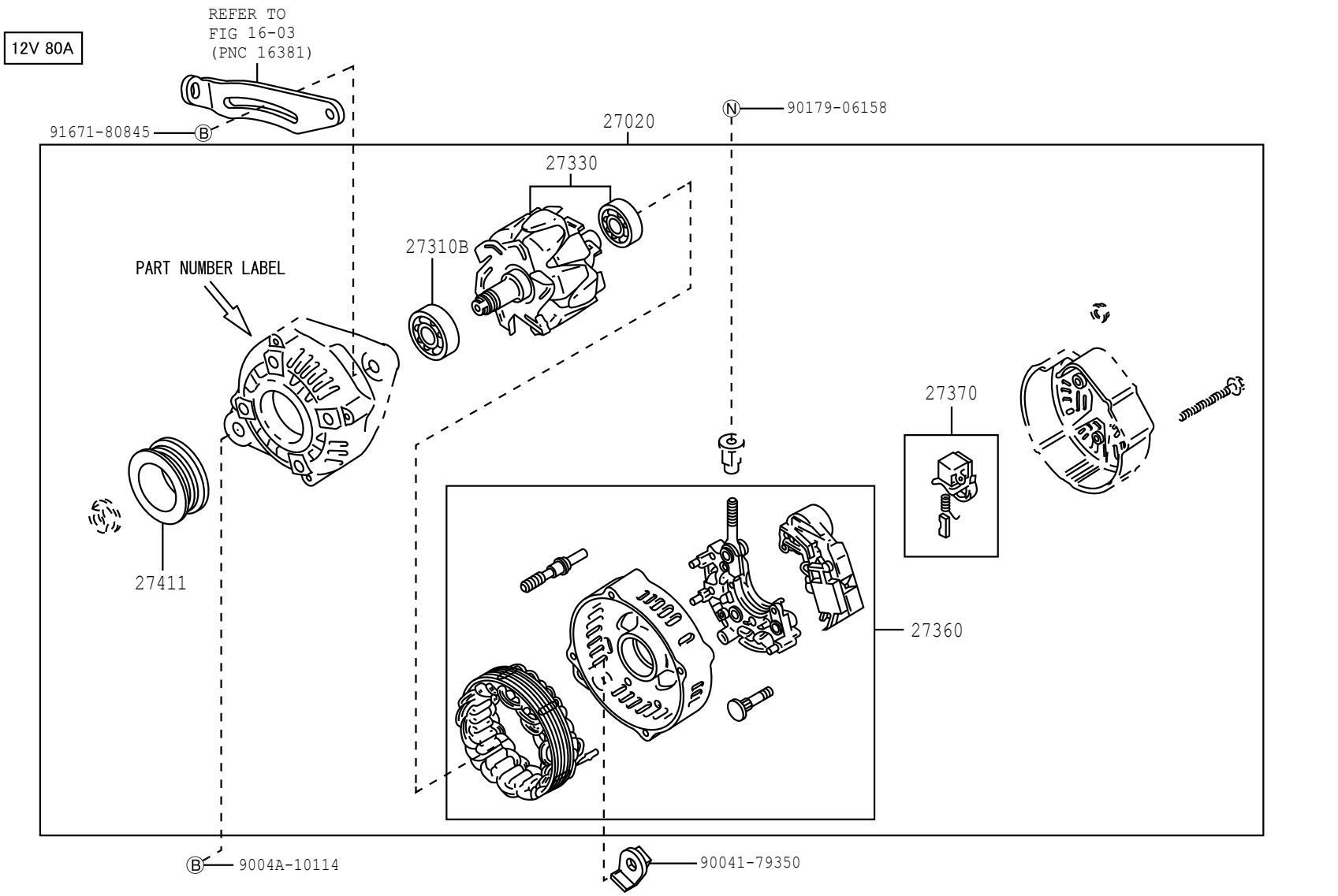

1903

193805-A

FIG.19-03 ALTERNATOR

(1111-)EJVE

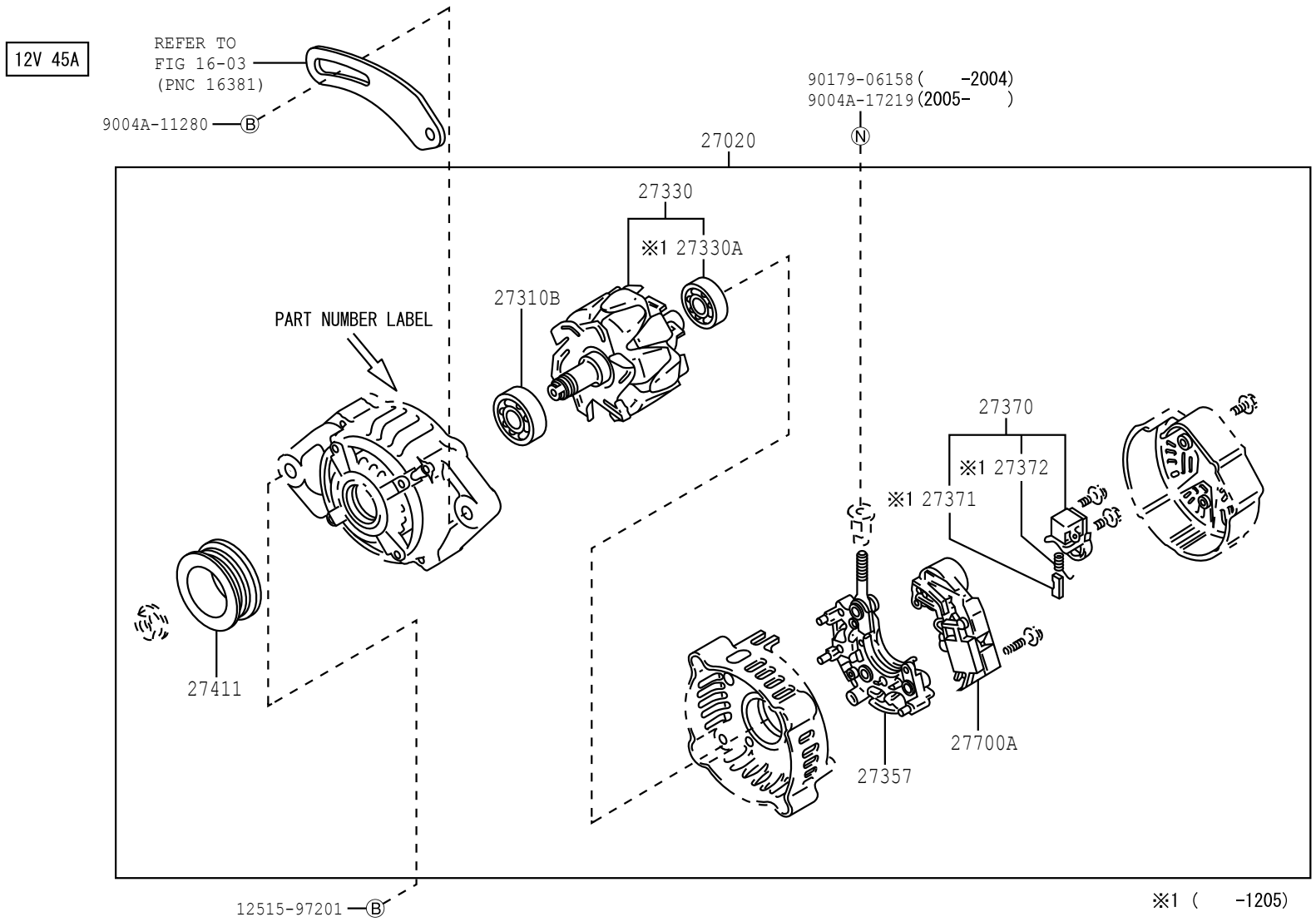

1903

193806-D

FIG. 19-03 ALTERNATOR

(1507-)1NRVE, 2NRVE

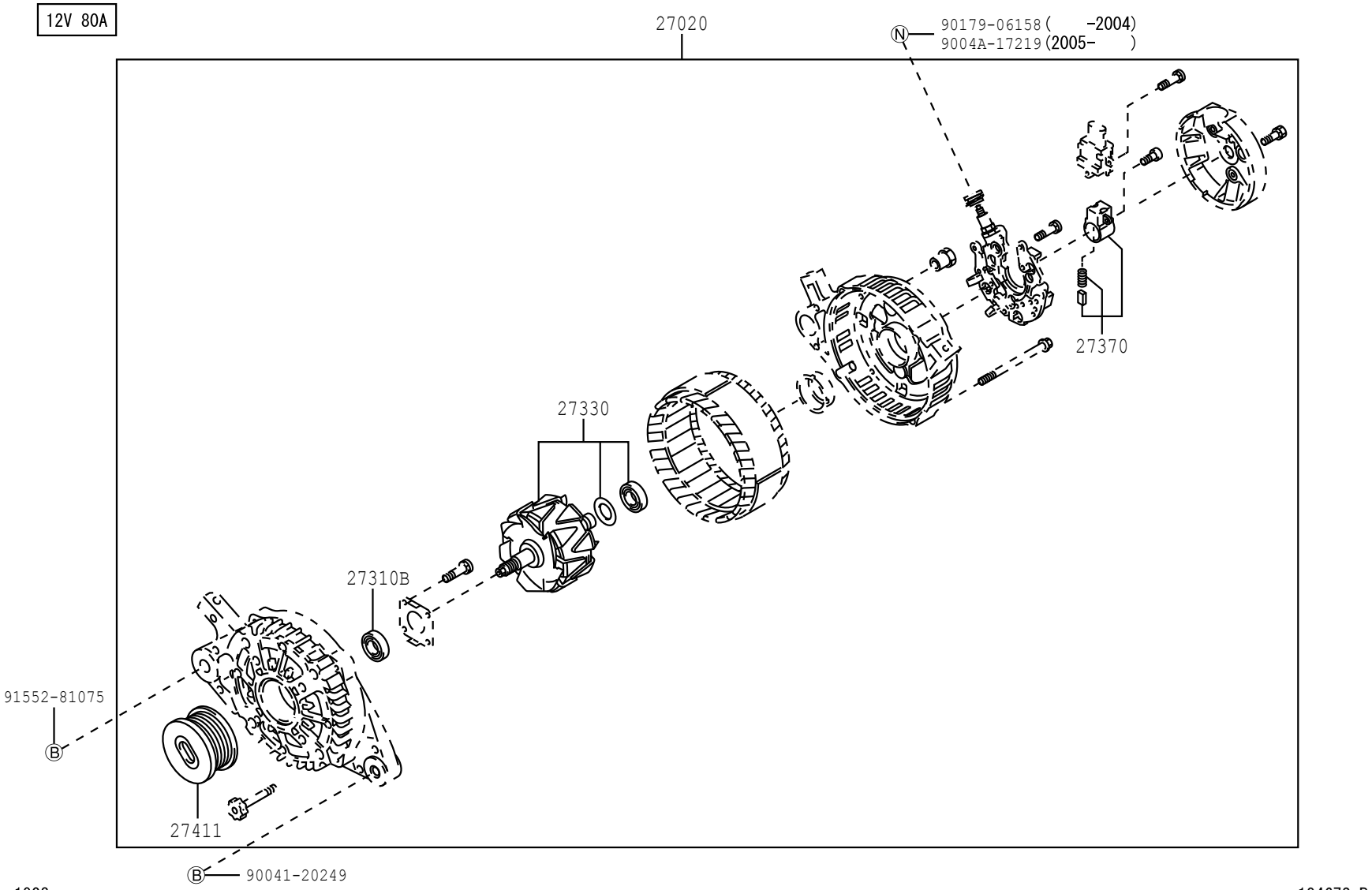

PROD_DATE	MODELS	SPEC CODE	DESCRIPTION	R/P	PART NUMBER	QYT	REV_REF FR	REV_REF TO
	+----------+							
	| 27020 | ALTERNATOR ASSY							
	+----------+							
1111 - 1205	EJVE..F650		12V 45A,W/PART NUMBER LABEL		27060-BZ010-	1		
1111 - 1404	K3VE..F651		12V 80A,W/PART NUMBER LABEL		27060-BZ100-	1		
1205 - 1507	EJVE..F650		12V 45A,W/PART NUMBER LABEL		27060-BZ011-	1		
1404 - 1507	K3VE..F651		12V 80A,W/PART NUMBER LABEL		27060-BZ320-	1		
1507 - 1607	EJVE..F650		12V 45A		27060-BZ011-	1		
1507 - 1901	1NRVE..F653		12V 80A		27060-BZ310-	1		
1901 -	1NRVE,2NRVE..F65#		12V 80A		27060-BZ310-	1		
	+----------+							
	| 27310B | BEARING(FOR ALTERNATOR DRIVE END FRAME)							
	+----------+							
1111 - 1205	EJVE..F650		ASSY,NO.27060BZ010		9004B-03001-	1		
1111 - 1404	K3VE..F651		ASSY,NO.27060BZ100		9004C-37002-	1		
1404 - 1501	K3VE..F651		ASSY,NO.27060BZ320		9004C-37008-	1		
1205 - 1507	EJVE..F650		ASSY,NO.27060BZ011		27791-87702-	1		
1501 - 1507	K3VE..F651		ASSY,NO.27060BZ320		9004B-37012-	1		
1507 - 1607	EJVE..F650				27791-87702-	1		
1507 - 1711	1NRVE..F653				9004B-37012-	1		
1712 - 1901	1NRVE..F653				9004B-37016-	1		
1901 -	1NRVE,2NRVE..F65#				9004B-37016-	1		
	+----------+							
	| 27330 | ROTOR ASSY, ALTERNATOR							
	+----------+							
1111 - 1404	K3VE..F651		ASSY,NO.27060BZ100		27330-BZ030-	1		
1111 - 1410	EJVE..F650				27330-BZ010-	1		
1404 - 1507	K3VE..F651		ASSY,NO.27060BZ320		27330-BZ060-	1		
1410 - 1507	EJVE..F650				27330-87209-	1		
1507 - 1607	EJVE..F650				27330-87209-	1		

FIG.19-03 ALTERNATOR

PROD_DATE	MODELS	SPEC CODE	DESCRIPTION	R/P	PART NUMBER	QYT	REV_REF FR	REV_REF TO
	+----------+							
	| 27330 | ROTOR ASSY, ALTERNATOR							
	CONTINUED--+							
1507 - 1901	1NRVE..F653				27330-BZ060-	1		
1901 -	1NRVE,2NRVE..F65#				27330-BZ060-	1		
	+----------+							
	| 27330A | BEARING(FOR ALTERNATOR ROTOR)							
	+----------+							
1111 - 1205	EJVE..F650				9004B-03002-	1		
	+----------+							
	| 27357 | HOLDER, ALTERNATOR, W/RECTIFIER							
	+----------+							
1111 - 1205	EJVE..F650		ASSY,NO.27060BZ010		27357-BZ010-	1		
1205 - 1410	EJVE..F650		ASSY,NO.27060BZ011		27357-87704-	1		
				#	(27357-87207-)	1		
1410 - 1507	EJVE..F650				27357-87207-	1		
1507 - 1607	EJVE..F650				27357-87207-	1		
	+----------+							
	| 27360 | COIL ASSY, ALTERNATOR							
	+----------+							
1111 - 1404	K3VE..F651		ASSY,NO.27060BZ100		27360-BZ010-	1		
1404 - 1507	K3VE..F651		ASSY,NO.27060BZ320		27360-BZ040-	1		
	+----------+							
	| 27370 | HOLDER ASSY, ALTERNATOR BRUSH							
	+----------+							
1111 - 1205	EJVE..F650		ASSY,NO.27060BZ010		27370-BZ010-	1		
1111 - 1507	K3VE..F651				27370-BZ020-	1		
1205 - 1507	EJVE..F650		ASSY,NO.27060BZ011		27370-87708-	1		
1507 - 1607	EJVE..F650				27370-87708-	1		
1507 - 1901	1NRVE..F653				27370-B1020-	1		
1901 -	1NRVE,2NRVE..F65#				27370-B1020-	1		
	+----------+							
	| 27371 | BRUSH, ALTERNATOR							
	+----------+							
1111 - 1205	EJVE..F650				27371-BZ010-	2		

PROD_DATE	MODELS	SPEC CODE	DESCRIPTION	R/P	PART NUMBER	QYT	REV_REF FR	REV_REF TO
	+----------+							
	| 27372 | SPRING, ALTERNATOR BRUSH							
	+----------+							
1111 - 1205	EJVE..F650				27372-BZ010-	2		
	+----------+							
	| 27411 | PULLEY, ALTERNATOR							
	+----------+							
1111 - 1205	EJVE..F650		ASSY,NO.27060BZ010		27411-BZ010-	1		
1111 - 1507	K3VE..F651				27411-BZ040-	1		
1205 - 1507	EJVE..F650		ASSY,NO.27060BZ011		27411-87216-	1		
1507 - 1607	EJVE..F650				27411-87216-	1		
1507 - 1901	1NRVE..F653				27411-BZ100-	1		
1901 -	1NRVE,2NRVE..F65#				27411-BZ100-	1		
	+----------+							
	| 27700A | REGULATOR ASSY, GENERATOR							
	+----------+							
1111 - 1205	EJVE..F650		ASSY,NO.27060BZ010		27700-BZ010-	1		
1205 - 1507	EJVE..F650		ASSY,NO.27060BZ011		27700-BZ050-	1		
1507 - 1607	EJVE..F650				27700-BZ050-	1		

FIG. 19-04 STARTER

(1111-1507)K3VE

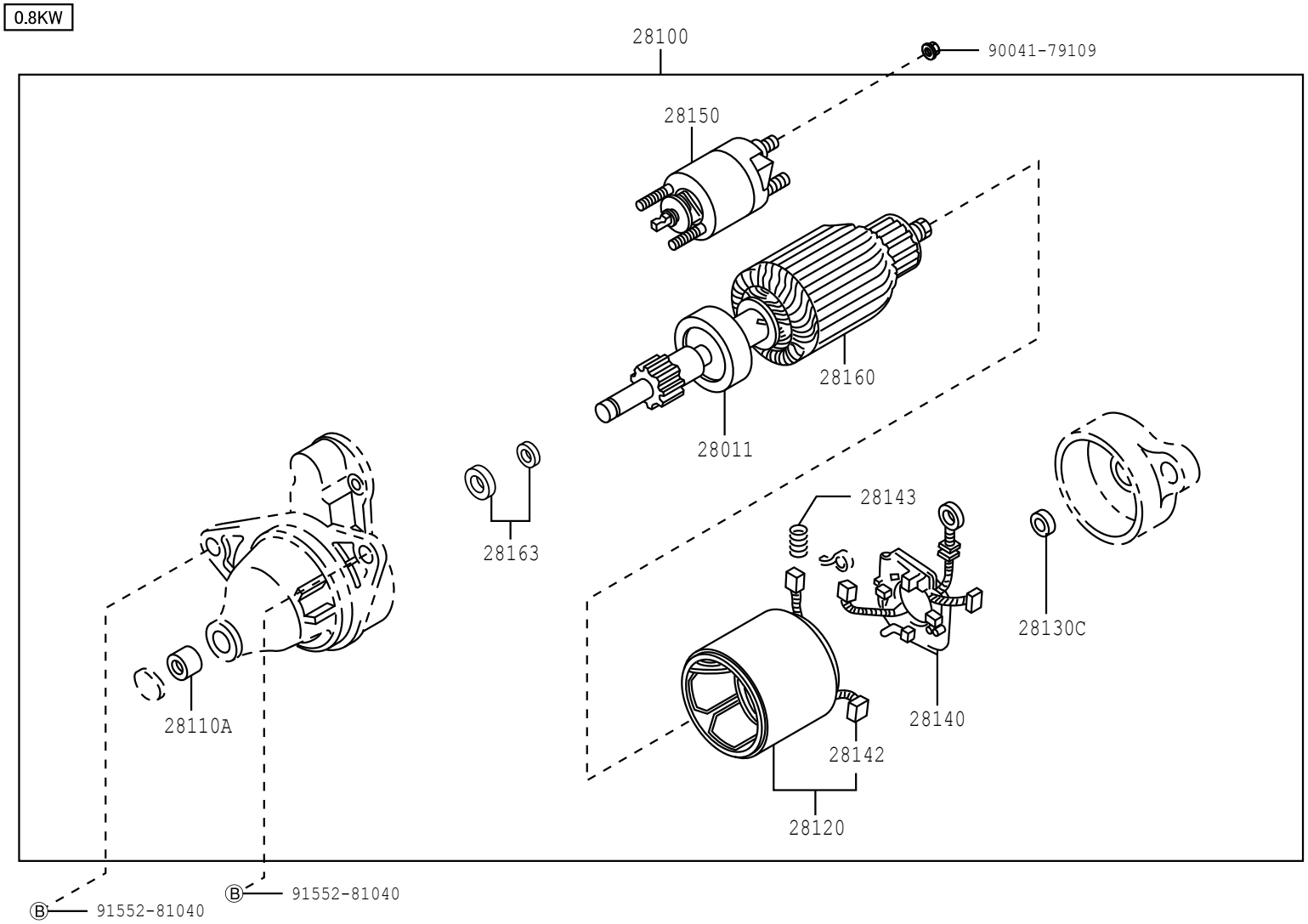

1904

193803

FIG. 19-04 STARTER

(1111-1507)EJVE

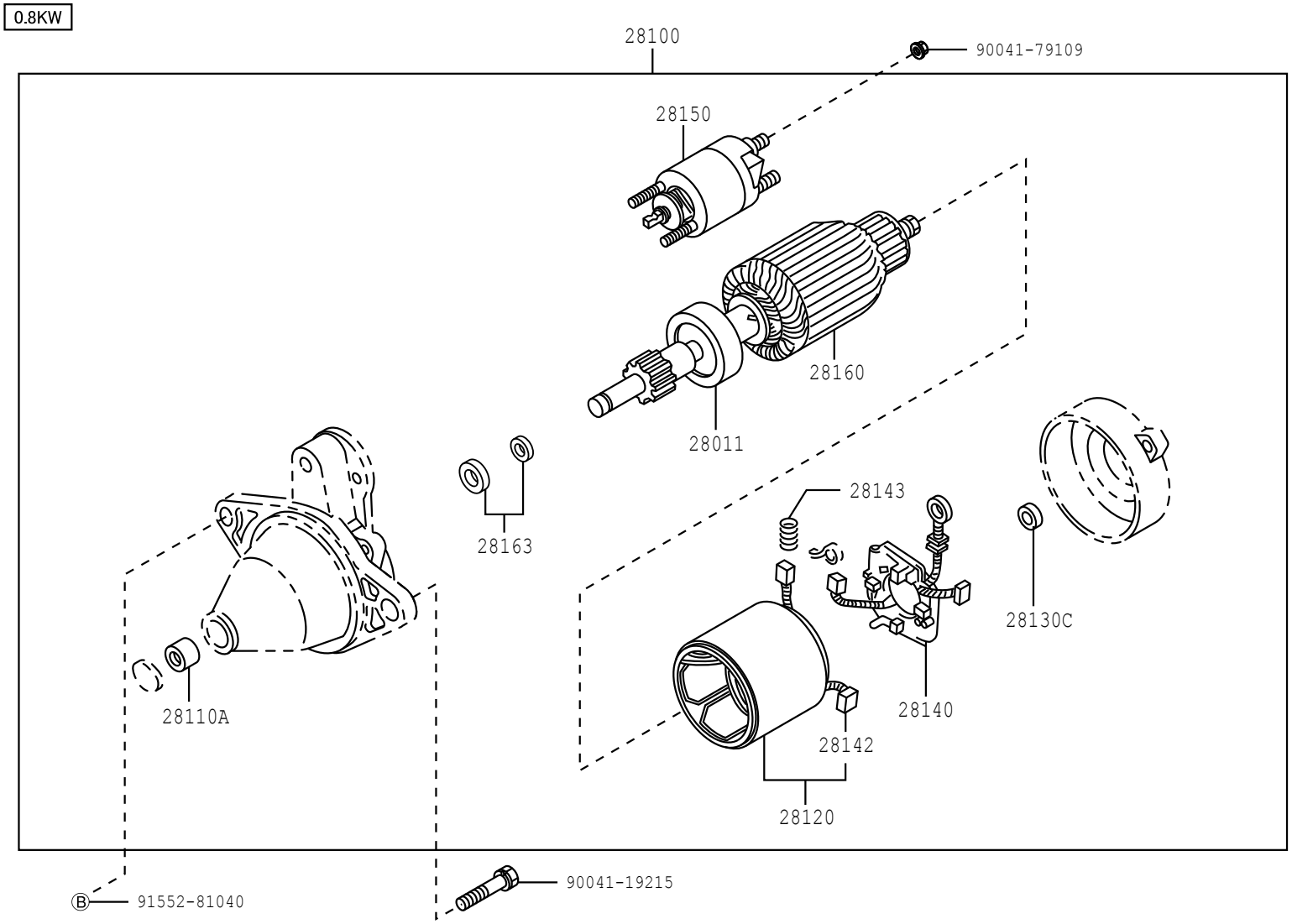

1904

193804

FIG. 19-04 STARTER

(1507-) 1NRVE, 2NRVE

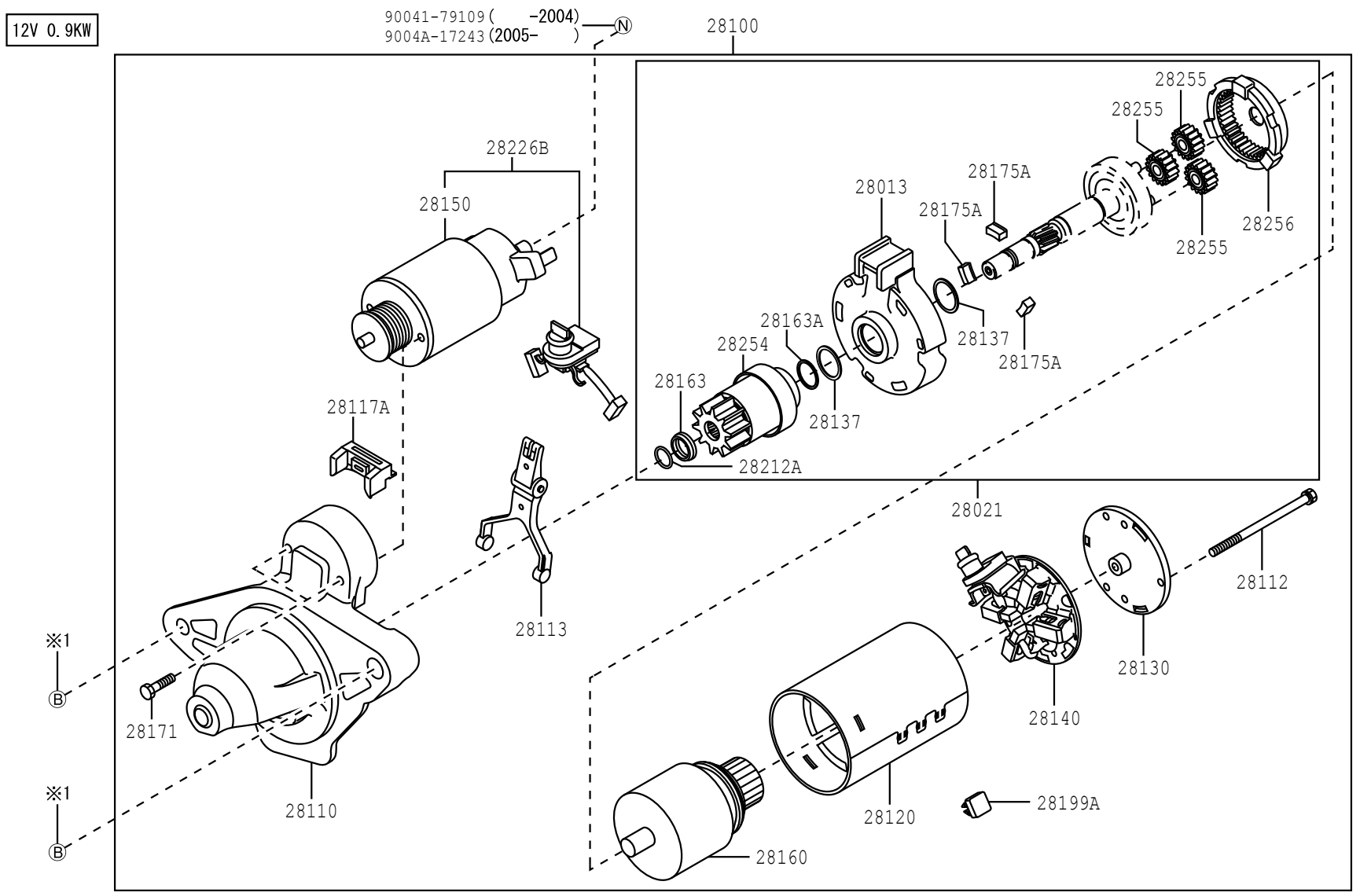

※1 90041-05302 (-1605)
9004A-10166 (1606-)

1904

194678-B

FIG. 19-04 STARTER

(1507-)EJVE

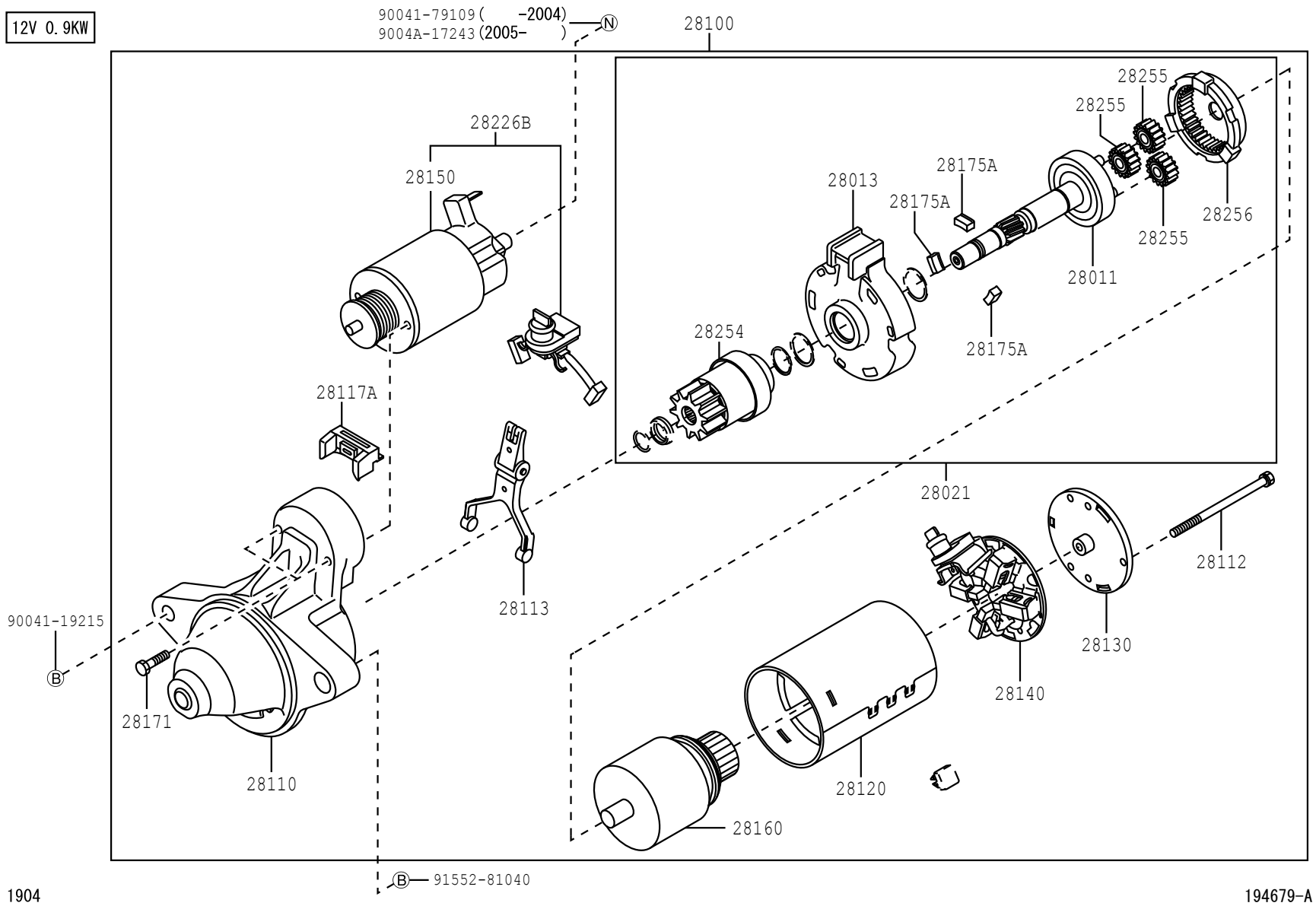

1904

194679-A

PROD_DATE	MODELS	SPEC CODE	DESCRIPTION	R/P	PART NUMBER	QYT	REV_REF FR	REV_REF TO
	28011 CLUTCH SUB-ASSY, STARTER							
1111 - 1507	EJVE..F650				28011-BZ010-	1		
1111 - 1507	K3VE..F651				28011-BZ020-	1		
1507 - 1607	EJVE..F650				28011-BZ140-	1		
	28013 BEARING, STARTER CENTER & SHOCK ABSORBER, NO.1							
1507 - 1607	EJVE..F650				28126-BZ010-	1		
1507 - 1901	1NRVE..F653				28126-BZ010-	1		
1901 -	1NRVE,2NRVE..F65#				28126-BZ010-	1		
	28021 CLUTCH SUB-ASSY, STARTER CENTER BEARING							
1507 - 1607	EJVE..F650				28021-BZ030-	1		
1507 - 1901	1NRVE..F653				28021-BZ050-	1		
1901 -	1NRVE,2NRVE..F65#				28021-BZ050-	1		
	28100 STARTER ASSY							
1111 - 1507	EJVE..F650		12V 0.8KW		28100-BZ010-	1		
1111 - 1507	K3VE..F651		12V 0.8KW		28100-BZ020-	1		
1507 - 1607	EJVE..F650		12V 0.9KW		28100-BZ230-	1		
1507 - 1901	1NRVE..F653		12V 0.9KW		28100-BZ200-	1		
1901 -	1NRVE,2NRVE..F65#		12V 0.9KW		28100-BZ200-	1		
	28110 HOUSING ASSY, STARTER DRIVE							
1507 - 1607	EJVE..F650				28110-BZ080-	1		
1507 - 1901	1NRVE..F653				28110-BZ170-	1		
1901 -	1NRVE,2NRVE..F65#				28110-BZ170-	1		
	28110A BEARING(FOR STARTER HOUSING)							
1111 - 1507	K3VE,EJVE..F65#				9004B-03004-	1		
				#	(28277-87201-)	1		

FIG. 19-04 STARTER

PROD_DATE	MODELS	SPEC CODE	DESCRIPTION	R/P	PART NUMBER	QYT	REV_REF FR	REV_REF TO
	28112 BOLT, HOUSING SET							
1507 - 1607	EJVE..F650				9004B-10018-	3		
1507 - 1901	1NRVE..F653				9004B-10018-	3		
1901 -	1NRVE,2NRVE..F65#				9004B-10018-	3		
	28113 LEVER, STARTER PINION DRIVE							
1507 - 1607	EJVE..F650				28113-BZ030-	1		
1507 - 1901	1NRVE..F653				28113-BZ030-	1		
1901 -	1NRVE,2NRVE..F65#				28113-BZ030-	1		
	28117A SEAL, RUBBER							
1507 - 1607	EJVE..F650				28117-BZ010-	1		
1507 - 1901	1NRVE..F653				28117-BZ010-	1		
1901 -	1NRVE,2NRVE..F65#				28117-BZ010-	1		
	28120 YOKE ASSY, STARTER							
1111 - 1507	K3VE,EJVE..F65#				28120-BZ010-	1		
1507 - 1607	EJVE..F650				28120-BZ060-	1		
1507 - 1901	1NRVE..F653				28120-BZ090-	1		
1901 -	1NRVE,2NRVE..F65#				28120-BZ090-	1		
	28130 FRAME ASSY, STARTER COMMUTATOR END							
1507 - 1607	EJVE..F650				28130-BZ140-	1		
1507 - 1901	1NRVE..F653				28130-BZ140-	1		
1901 -	1NRVE,2NRVE..F65#				28130-BZ140-	1		
	28130C BEARING, STARTER FLANGE							
1111 - 1507	K3VE,EJVE..F65#				9004B-03004-	1		
				#	(28277-87201-)	1		

PROD_DATE	MODELS	SPEC CODE	DESCRIPTION	R/P	PART NUMBER	QYT	REV_REF FR	REV_REF TO
	+----------+							
	| 28137 | WASHER, FELT, STARTER							
	+----------+							
1507 - 1901	1NRVE..F653				9004B-20007-	2		
1901 -	1NRVE,2NRVE..F65#				9004B-20007-	2		
	+----------+							
	| 28140 | HOLDER ASSY, STARTER BRUSH							
	+----------+							
1111 - 1507	K3VE,EJVE..F65#				28149-BZ010-	1		
				#	(28149-87501-)	1		
1507 - 1607	EJVE..F650				28140-BZ140-	1		
1507 - 1901	1NRVE..F653				28140-BZ140-	1		
1901 -	1NRVE,2NRVE..F65#				28140-BZ140-	1		
	+----------+							
	| 28142 | BRUSH, START							
	+----------+ ER							
1111 - 1507	K3VE,EJVE..F65#				28142-87504-	4		
	+----------+							
	| 28143 | SPRING, STARTER BRUSH							
	+----------+							
1111 - 1507	K3VE,EJVE..F65#				28143-BZ010-	4		
				#	(28143-10020-)	1		
	+----------+							
	| 28150 | SWITCH ASSY, MAGNET STARTER							
	+----------+							
1111 - 1507	K3VE,EJVE..F65#				28150-BZ010-	1		
1507 - 1607	EJVE..F650				28150-BZ040-	1		
1507 - 1901	1NRVE..F653				28150-BZ030-	1		
1901 -	1NRVE,2NRVE..F65#				28150-BZ030-	1		
	+----------+							
	| 28160 | ARMATURE ASSY, STARTER							
	+----------+							
1111 - 1507	EJVE..F650				28160-BZ010-	1		
1111 - 1507	K3VE..F651				28160-BZ020-	1		
1507 - 1607	EJVE..F650				28160-BZ040-	1		
1507 - 1901	1NRVE..F653				28160-BZ040-	1		
1901 -	1NRVE,2NRVE..F65#				28160-BZ040-	1		

FIG. 19-04 STARTER

PROD_DATE	MODELS	SPEC CODE	DESCRIPTION	R/P	PART NUMBER	QYT	REV_REF FR	REV_REF TO
	+----------+							
	| 28163 | NUT OR COLLAR, PINION STOP, STARTER							
	+----------+							
1111 - 1507	K3VE,EJVE..F65#				28142-87505-	1		
1507 - 1901	1NRVE..F653				28163-BZ140-	1		
1901 -	1NRVE,2NRVE..F65#				28163-BZ140-	1		
	+----------+							
	| 28163A | RING, SNAP(FOR STARTER PINION STOP NUT)							
	+----------+							
1507 - 1901	1NRVE..F653				9004B-52011-	1		
1901 -	1NRVE,2NRVE..F65#				9004B-52011-	1		
	+----------+							
	| 28171 | BOLT, STARTE							
	+----------+ R							
1507 - 1607	EJVE..F650				9004B-10015-	2		
1507 - 1901	1NRVE..F653				9004B-10015-	2		
1901 -	1NRVE,2NRVE..F65#				9004B-10015-	2		
	+----------+							
	| 28175A | GASKET, MAGNET SWITCH COVER							
	+----------+							
1507 - 1607	EJVE..F650				9004B-43001-	3		
1507 - 1901	1NRVE..F653				9004B-43001-	3		
1901 -	1NRVE,2NRVE..F65#				9004B-43001-	3		
	+----------+							
	| 28199A | PROTECTOR, DUST STARTER							
	+----------+							
1507 - 1901	1NRVE..F653				28199-BZ140-	1		
1901 -	1NRVE,2NRVE..F65#				28199-BZ140-	1		
	+----------+							
	| 28212A | RING, SNAP, STARTER CLUTCH HOUSING DISC							
	+----------+							
1507 - 1901	1NRVE..F653				9004B-52012-	1		
1901 -	1NRVE,2NRVE..F65#				9004B-52012-	1		
	+----------+							
	| 28226B | STARTER KIT, REPAIR SERVICE							
	+----------+							
1507 - 1607	EJVE..F650				28226-BZ020-	1		
1507 - 1901	1NRVE..F653				28226-BZ010-	1		

PROD_DATE	MODELS	SPEC CODE	DESCRIPTION	R/P	PART NUMBER	QYT	REV_REF FR	REV_REF TO
	+----------+							
	| 28226B | STARTER KIT, REPAIR SERVICE							
	CONTINUED--+							
1901 -	1NRVE,2NRVE..F65#				28226-BZ010-	1		
	+----------+							
	| 28254 | PINION, STARTER IDLE GEAR							
	+----------+							
1507 - 1607	EJVE..F650				28254-BZ040-	1		
1507 - 1901	1NRVE..F653				28254-BZ060-	1		
1901 -	1NRVE,2NRVE..F65#				28254-BZ060-	1		
	+----------+							
	| 28255 | GEAR, PLANET							
	+----------+							
1507 - 1607	EJVE..F650				28255-BZ140-	3		
1507 - 1901	1NRVE..F653				28255-BZ140-	3		
1901 -	1NRVE,2NRVE..F65#				28255-BZ140-	3		
	+----------+							
	| 28256 | GEAR, STARTER INTERNAL							
	+----------+							
1507 - 1607	EJVE..F650				28256-BZ020-	1		
1507 - 1901	1NRVE..F653				28256-BZ020-	1		
1901 -	1NRVE,2NRVE..F65#				28256-BZ020-	1		

K3VE

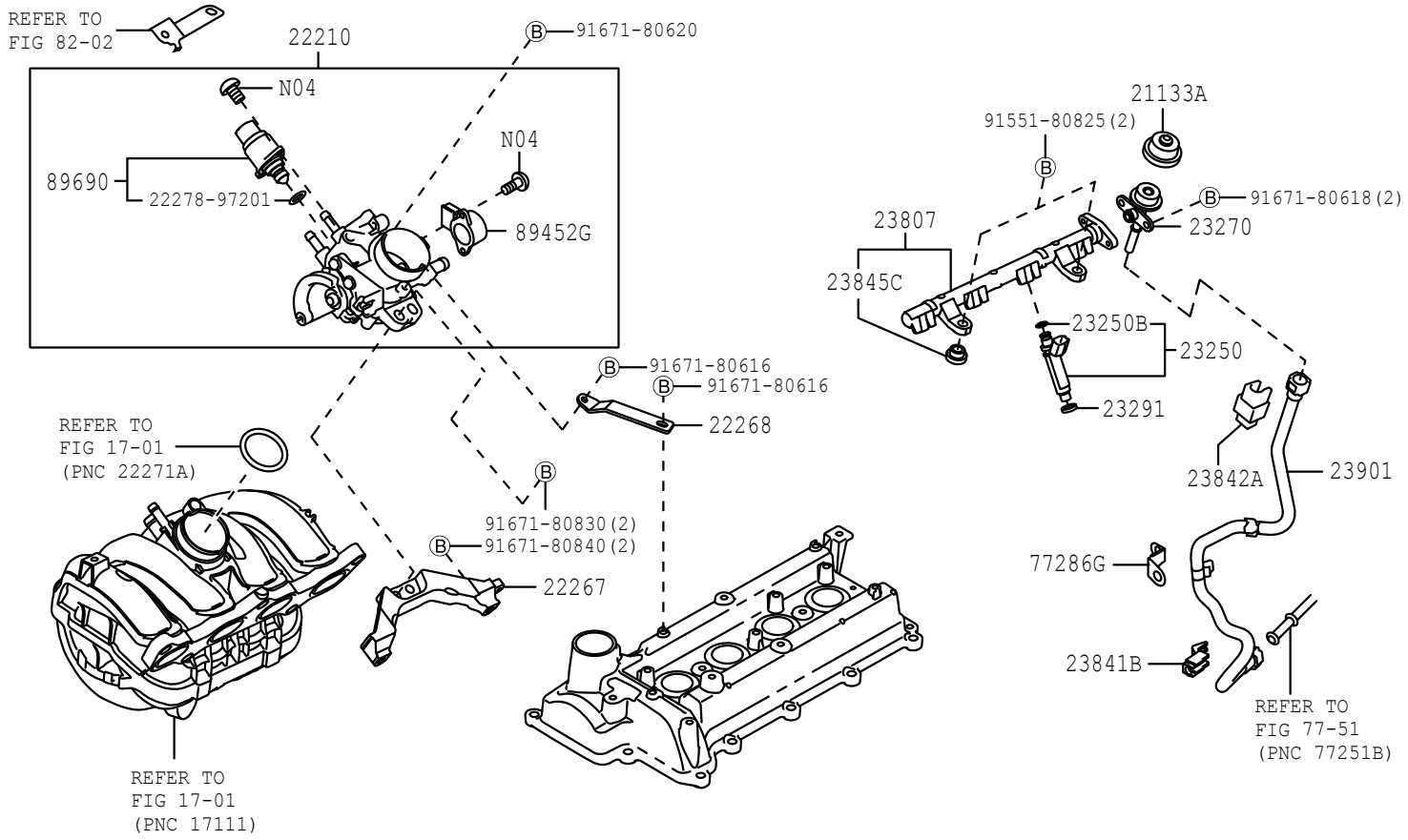

N04 This part is not available for service

EJVE

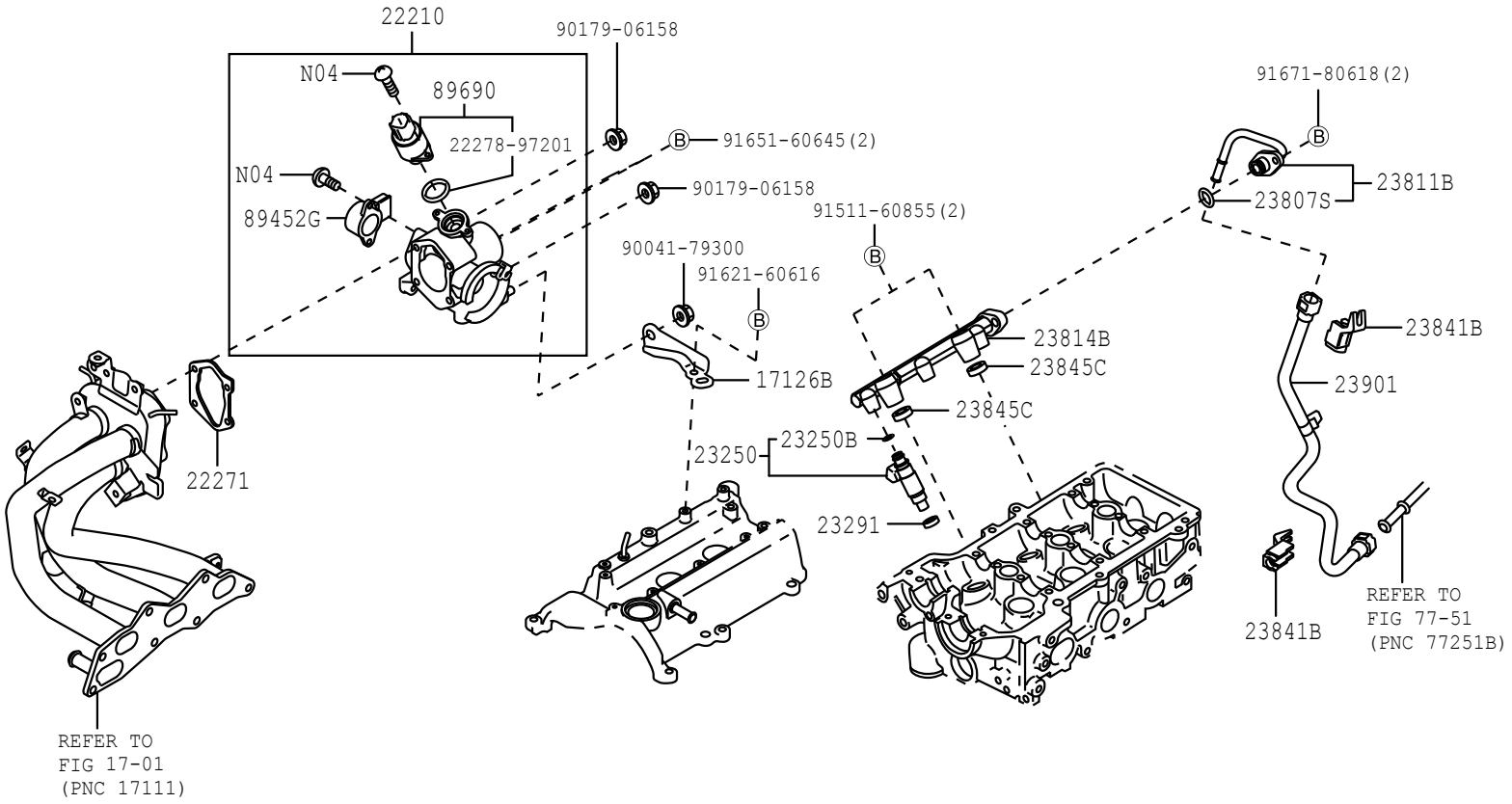

N04 This part is not available for service

FIG.22-11 FUEL INJECTION SYSTEM

(1507-)1NRVE,2NRVE

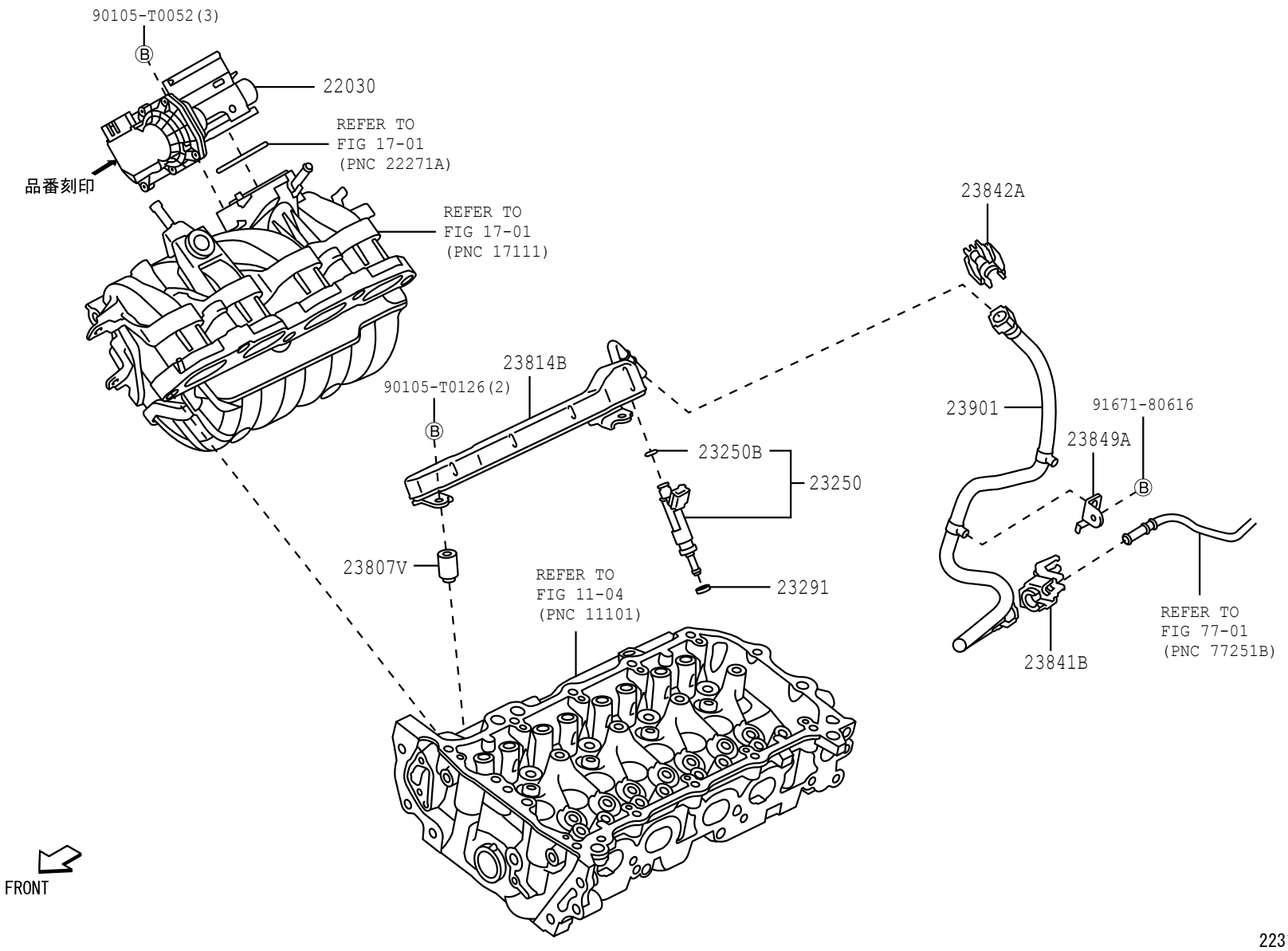

22FB

223185-A

PROD_DATE	MODELS	SPEC CODE	DESCRIPTION	R/P	PART NUMBER	QYT	REV_REF FR	REV_REF TO
	+----------+							
	| 17126B | STAY, SURGE TANK, NO.2							
	+----------+							
1111 - 1507	EJVE..F650				17126-BZ010-	1		
1507 - 1607	EJVE..F650				17126-BZ010-	1		
	+----------+							
	| 21133A | COVER, DUST							
	+----------+							
1111 - 1507	K3VE..F651				21133-BZ020-	1		
				#	(21133-B0010-)	1		
	+----------+							
	| 22030 | BODY ASSY, THROTTLE W/THROTTLE POSITION SENSOR							
	+----------+							
1507 - 1703	1NRVE..F653		W/PART NUMBER MARK		22030-0Y020-	1		
1703 - 1901	1NRVE..F653		W/PART NUMBER MARK		22030-BZ040-	1		
1901 -	1NRVE,2NRVE..F65#		W/PART NUMBER MARK		22030-BZ040-	1		
	+----------+							
	| 22210 | BODY ASSY, THROTTLE							
	+----------+							
1111 - 1310	EJVE..F650				22210-BZ010-	1		
1111 - 1310	K3VE..F651				22210-BZ080-	1		
1310 - 1507	EJVE..F650				22210-BZ011-	1		
1310 - 1507	K3VE..F651				22210-BZ081-	1		
1507 - 1607	EJVE..F650				22210-BZ011-	1		
	+----------+							
	| 22267 | BRACKET, THROTTLE BODY							
	+----------+							
1111 - 1507	K3VE..F651				22267-BZ020-	1		
				#	(22267-B1021-)	1		
	+----------+							
	| 22268 | BRACKET, THROTTLE BODY, NO.2							
	+----------+							
1111 - 1507	K3VE..F651				22268-BZ010-	1		
	+----------+							
	| 22271 | GASKET, THROTTLE BODY							
	+----------+							
1111 - 1507	EJVE..F650				22271-B0010-	1		
1507 - 1607	EJVE..F650				22271-B0010-	1		

FIG.22-11 FUEL INJECTION SYSTEM

PROD_DATE	MODELS	SPEC CODE	DESCRIPTION	R/P	PART NUMBER	QYT	REV_REF FR	REV_REF TO
	+----------+							
	| 23250 | INJECTOR ASSY, FUEL							
	+----------+							
1111 - 1507	K3VE..F651				23250-BZ010-	4		
1111 - 1507	EJVE..F650				23250-BZ020-	3		
1507 - 1607	EJVE..F650				23250-BZ020-	3		
1507 - 1901	1NRVE..F653				23209-BZ050-	4		
1901 -	1NRVE,2NRVE..F65#				23209-BZ050-	4		
	+----------+							
	| 23250B | RING, O(FOR FUEL INJECTOR)							
	+----------+							
1111 - 1507	K3VE..F651				90043-01136-	4		
1407 - 1507	EJVE..F650		LOCAL SOURCED PARTS		90043-01136-	3		
1507 - 1607	EJVE..F650		LOCAL SOURCED PARTS		90043-01136-	3		
1507 - 1607	EJVE..F650		JAPAN SOURCED PARTS		9004A-30055-	3		
				#	(90043-01136-)	1		
1507 - 1901	1NRVE..F653				90301-07037-	4		
1901 -	1NRVE,2NRVE..F65#				90301-07037-	4		
	+----------+							
	| 23270 | DAMPER ASSY, FUEL PRESSURE PULSATION							
	+----------+							
1111 - 1507	K3VE..F651				23270-B0010-	1		
				#	(23270-B0030-)	1		
	+----------+							
	| 23291 | INSULATOR, INJECTOR VIBRATION							
	+----------+							
1111 - 1507	EJVE..F650				23291-BZ010-	3		
1111 - 1507	K3VE..F651				23291-BZ010-	4		
1507 - 1607	EJVE..F650				23291-BZ010-	3		
1507 - 1901	1NRVE..F653				23291-0Y020-	4		
				#	(23291-23010-)	1		
1901 -	1NRVE,2NRVE..F65#				23291-0Y020-	4		
				#	(23291-23010-)	1		

PROD_DATE	MODELS	SPEC CODE	DESCRIPTION	R/P	PART NUMBER	QYT	REV_REF FR	REV_REF TO
	+----------+							
	| 23807 | PIPE SUB-ASSY, FUEL DELIVERY							
	+----------+							
1111 - 1507	K3VE..F651				23807-BZ030-	1		
				#	(23807-97403-)	1		
	+----------+							
	| 23807S | RING, O(FOR FUEL DELIVARY PIPE)							
	+----------+							
1111 - 1206	EJVE..F650				90043-01263-	1		
1207 - 1507	EJVE..F650				90043-01363-	1		
1507 - 1607	EJVE..F650				90043-01363-	1		
	+----------+							
	| 23807V | SPACER, NO.1(FOR DELIVERY PIPE)							
	+----------+							
1507 - 1901	1NRVE..F653				23891-47040-	2		
1901 -	1NRVE,2NRVE..F65#				23891-47040-	2		
	+----------+							
	| 23811B | PIPE, FUEL, NO.1							
	+----------+							
1111 - 1507	EJVE..F650				23811-B0020-	1		
1507 - 1607	EJVE..F650				23811-B0020-	1		
	+----------+							
	| 23814B | PIPE, FUEL DELIVERY							
	+----------+							
1111 - 1507	EJVE..F650				23814-87Z01-	1		
1507 - 1607	EJVE..F650				23814-87Z01-	1		
1507 - 1901	1NRVE..F653				23814-BZ070-	1		
1901 -	1NRVE,2NRVE..F65#				23814-BZ070-	1		
	+----------+							
	| 23841B | CLAMP, FUEL PIPE, NO.1(FOR EFI)							
	+----------+							
1111 - 1507	K3VE..F651				23841-B1010-	1		
1111 - 1507	EJVE..F650				23841-B1010-	2		
1507 - 1510	1NRVE..F653				23841-B1010-	1		
1507 - 1510	EJVE..F650				23841-B1010-	2		
1511 - 1607	EJVE..F650				23841-BZ020-	2		
				#	(23841-B1010-)	1		

FIG.22-11 FUEL INJECTION SYSTEM

PROD_DATE	MODELS	SPEC CODE	DESCRIPTION	R/P	PART NUMBER	QYT	REV_REF FR	REV_REF TO
	+----------+							
	| 23841B | CLAMP, FUEL PIPE, NO.1(FOR EFI)							
	CONTINUED--+							
1511 - 1901	1NRVE..F653				23841-BZ020-	1		
				#	(23841-B1010-)	1		
1901 -	1NRVE,2NRVE..F65#				23841-BZ020-	1		
				#	(23841-B1010-)	1		
	+----------+							
	| 23842A | CLAMP, FUEL PIPE, NO.2(FOR EFI)							
	+----------+							
1111 - 1507	K3VE..F651				23842-B0010-	1		
1507 - 1901	1NRVE..F653				23842-B0010-	1		
1901 -	1NRVE,2NRVE..F65#				23842-B0010-	1		
	+----------+							
	| 23845C | INSULATOR, FUEL PIPE							
	+----------+							
1111 - 1507	EJVE..F650				23845-87205-	2		
1111 - 1507	K3VE..F651				23845-BZ010-	2		
1507 - 1607	EJVE..F650				23845-87205-	2		
	+----------+							
	| 23849A | SUPPORT, FUEL PIPE							
	+----------+							
1507 - 1901	1NRVE..F653				23849-BZ030-	1		
1901 -	1NRVE,2NRVE..F65#				23849-BZ030-	1		
	+----------+							
	| 23901 | TUBE SUB-ASSY, FUEL							
	+----------+							
1111 - 1507	EJVE..F650				23901-B0010-	1		
1111 - 1507	K3VE..F651				23901-B0020-	1		
1507 - 1607	EJVE..F650				23901-BZ020-	1		
1507 - 1901	1NRVE..F653				23901-BZ030-	1		
1901 -	1NRVE,2NRVE..F65#				23901-BZ030-	1		
	+----------+							
	| 77286G | CLAMP, FUEL TUBE, NO.2							
	+----------+							
1111 - 1507	F651				23849-BZ010-	1		

PROD_DATE	MODELS	SPEC CODE	DESCRIPTION	R/P	PART NUMBER	QYT	REV_REF FR	REV_REF TO
	+----------+							
	| 89452G | SENSOR, THROTTLE POSITION							
	+----------+							
1111 - 1507	F651				89452-97401-	1		
1111 - 1507	F650				89452-BZ010-	1		
1507 - 1607	F650				89452-BZ010-	1		
	+----------+							
	| 89690 | ACTUATOR ASSY, IDLE SPEED CONTROL							
	+----------+							
1111 - 1309	F65#				89690-97202-	1		
				#	(89690-B1010-)	1		
1310 - 1507	F65#				89690-BZ010-	1		
1507 - 1607	F650				89690-BZ010-	1		

FIG. 31-01 CLUTCH & RELEASE FORK

(1111-)F651, 653. . 5F

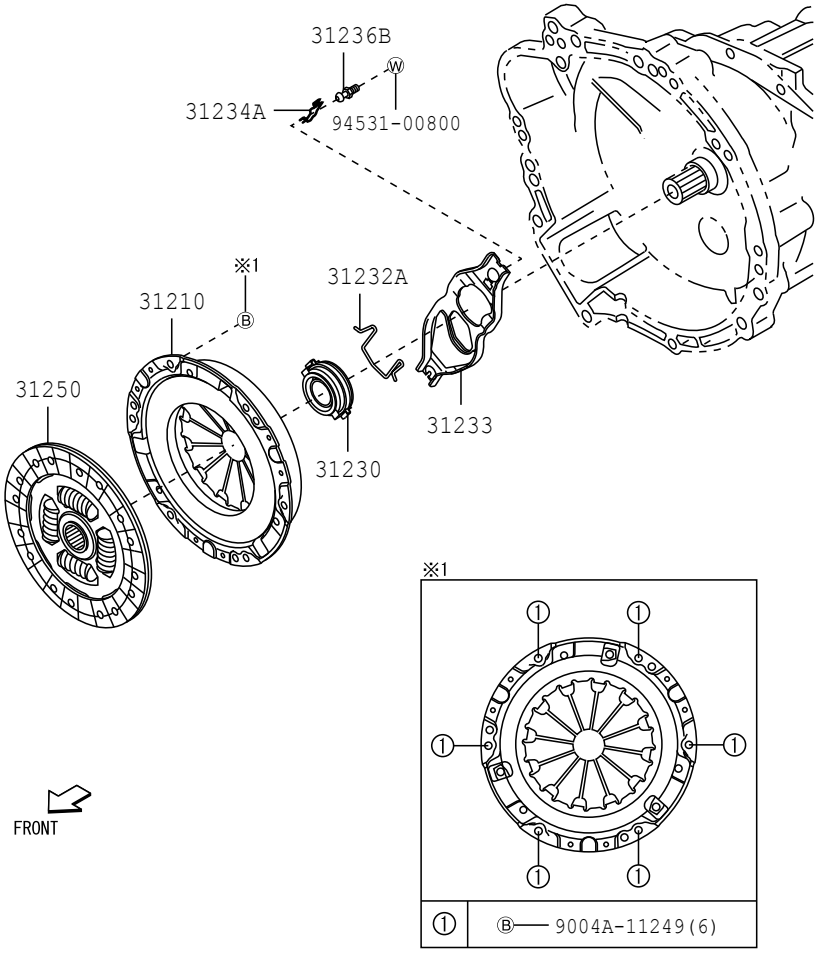

3101

312561-B

FIG. 31-01 CLUTCH & RELEASE FORK

(1901-)F654. . 5F

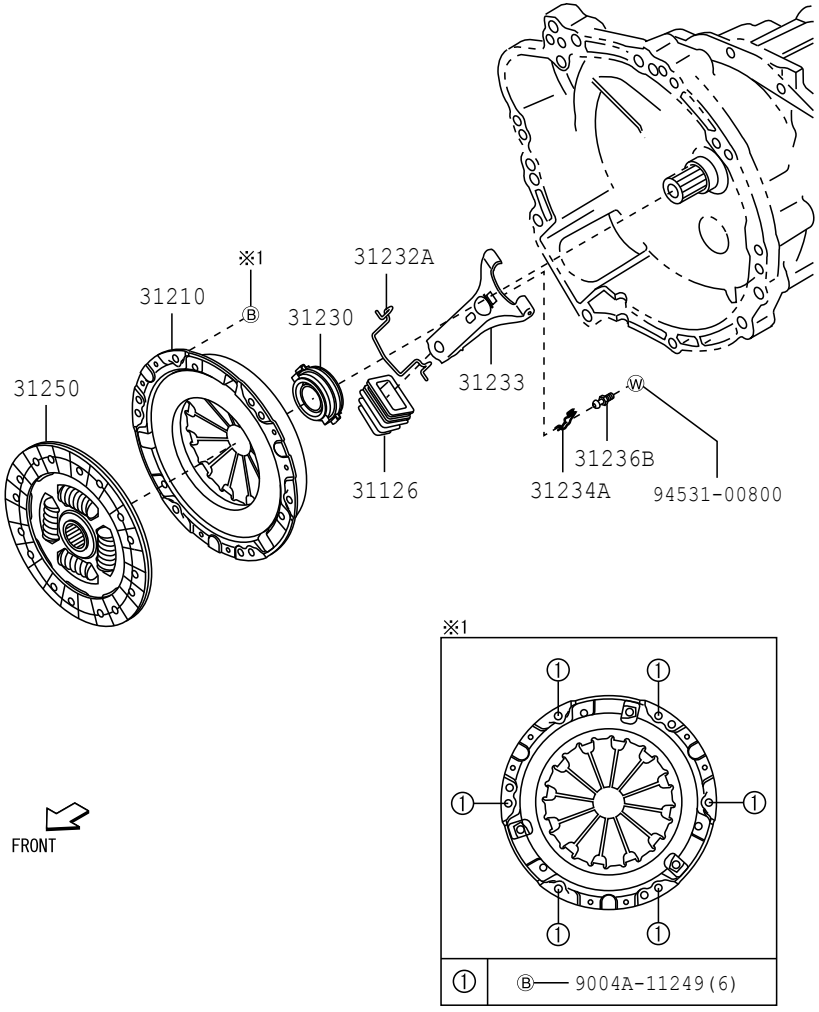

3101

312562-B

(1111-)F650

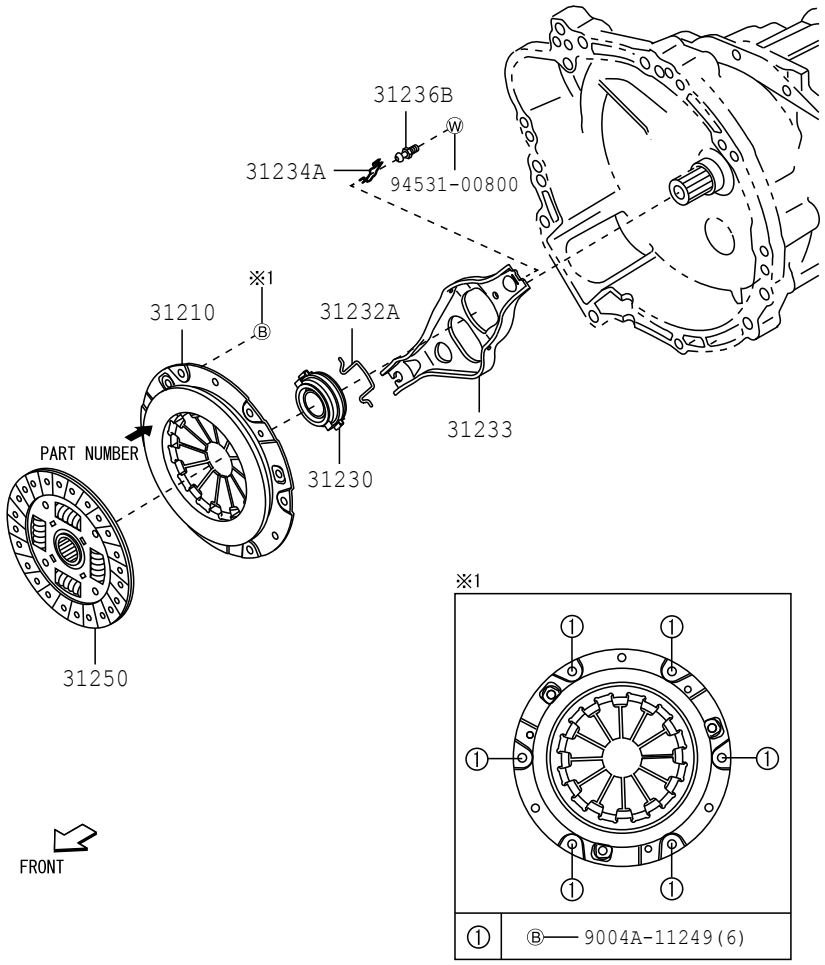

3101

312563-C

FIG.31-01 CLUTCH & RELEASE FORK

PROD_DATE	MODELS	SPEC CODE	DESCRIPTION	R/P	PART NUMBER	QYT	REV_REF FR	REV_REF TO
	+----------+							
	| 31126 | BOOT, CLUTCH RELEASE FORK							
	+----------+							
1901 -	F654..5F				31126-BZ020-	1		
				#	(31126-20070-)	1		
	+----------+							
	| 31210 | COVER ASSY, CLUTCH							
	+----------+							
1111 - 1204	F651..5F				31210-BZ020-	1		
1111 - 1401	F650				31210-BZ010-	1		
1205 - 1507	F651..5F				31210-BZ021-	1		
1401 - 1507	F650				31210-BZ040-	1		
1507 - 1607	F650				31210-BZ040-	1		
1507 - 1901	F653..5F				31210-BZ021-	1		
1901 -	F653..5F				31210-BZ021-	1		
1901 -	F654..5F				31210-BZ081-	1		
	+----------+							
	| 31230 | BEARING ASSY, CLUTCH RELEASE							
	+----------+							
1111 - 1507	F65#..5F				31230-BZ060-	1		
1507 - 1607	F650				31230-BZ060-	1		
1507 - 1901	F653..5F				31230-BZ060-	1		
1901 -	F65#..5F				31230-BZ060-	1		
	+----------+							
	| 31232A | CLIP, RELEASE BEARING HUB							
	+----------+							
1111 - 1507	F65#..5F				31232-BZ040-	1		
1507 - 1607	F650				31232-BZ040-	1		
1507 - 1901	F653..5F				31232-BZ040-	1		
1901 -	F653..5F				31232-BZ040-	1		
1901 -	F654..5F				31232-BZ080-	1		
				#	(31232-87401-)	1		
	+----------+							
	| 31233 | FORK, CLUTCH RELEASE							
	+----------+							
1111 - 1507	F650				31233-BZ010-	1		

PROD_DATE	MODELS	SPEC CODE	DESCRIPTION	R/P	PART NUMBER	QYT	REV_REF FR	REV_REF TO
	+----------+							
	| 31233 | FORK, CLUTCH RELEASE							
	CONTINUED--+							
1111 - 1507	F651..5F				31233-BZ020-	1		
1507 - 1510	F653..5F				31233-BZ020-	1		
1507 - 1607	F650				31233-BZ010-	1		
1511 - 1901	F653..5F				31233-BZ040-	1		
1901 -	F653..5F				31233-BZ040-	1		
1901 -	F654..5F				31233-BZ050-	1		
	+----------+							
	| 31234A | SPRING, RELEASE FORK SUPPORT							
	+----------+							
1111 - 1502	F65#..5F				31234-BZ030-	1		
				#	(31234-87402-)	1		
1503 - 1507	F65#..5F				31234-BZ031-	1		
1507 - 1607	F650				31234-BZ031-	1		
1507 - 1901	F653..5F				31234-BZ031-	1		
1901 -	F65#..5F				31234-BZ031-	1		
	+----------+							
	| 31236B | SUPPORT, RELEASE FORK							
	+----------+							
1111 - 1507	F650				31236-87501-	1		
1111 - 1507	F651..5F				31236-BZ020-	1		
1507 - 1607	F650				31236-87501-	1		
1507 - 1901	F653..5F				31236-BZ020-	1		
1901 -	F654..5F				31236-BZ010-	1		
				#	(31236-87401-)	1		
1901 -	F653..5F				31236-BZ020-	1		
	+----------+							
	| 31250 | DISC ASSY, CLUTCH							
	+----------+							
1111 - 1401	F650		OD=180		31250-BZ200-	1		
1111 - 1507	F651..5F				31250-BZ130-	1		
1401 - 1507	F650		OD=190		31250-BZ210-	1		

FIG.31-01 CLUTCH & RELEASE FORK

PROD_DATE	MODELS	SPEC CODE	DESCRIPTION	R/P	PART NUMBER	QYT	REV_REF FR	REV_REF TO
	+----------+							
	| 31250 | DISC ASSY, CLUTCH							
	CONTINUED--+							
1507 - 1607	F650				31250-BZ210-	1		
1507 - 1901	F653..5F				31250-BZ130-	1		
1901 -	F654..5F				31250-BZ080-	1		
1901 -	F653..5F				31250-BZ130-	1		

FIG. 31-02 CLUTCH PEDAL & FLEXIBLE HOSE

(1111-)F650

CABLE TYPE

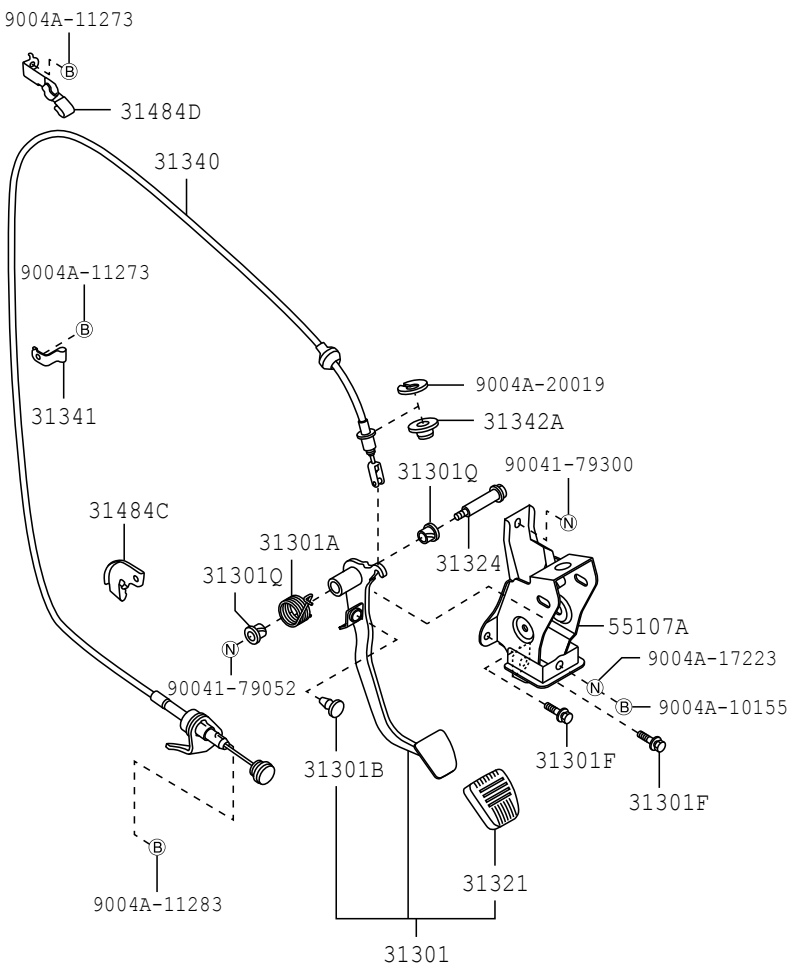

3102 312570-E

FIG. 31-02 CLUTCH PEDAL & FLEXIBLE HOSE

(1111-1507)F651..5F

CABLE TYPE

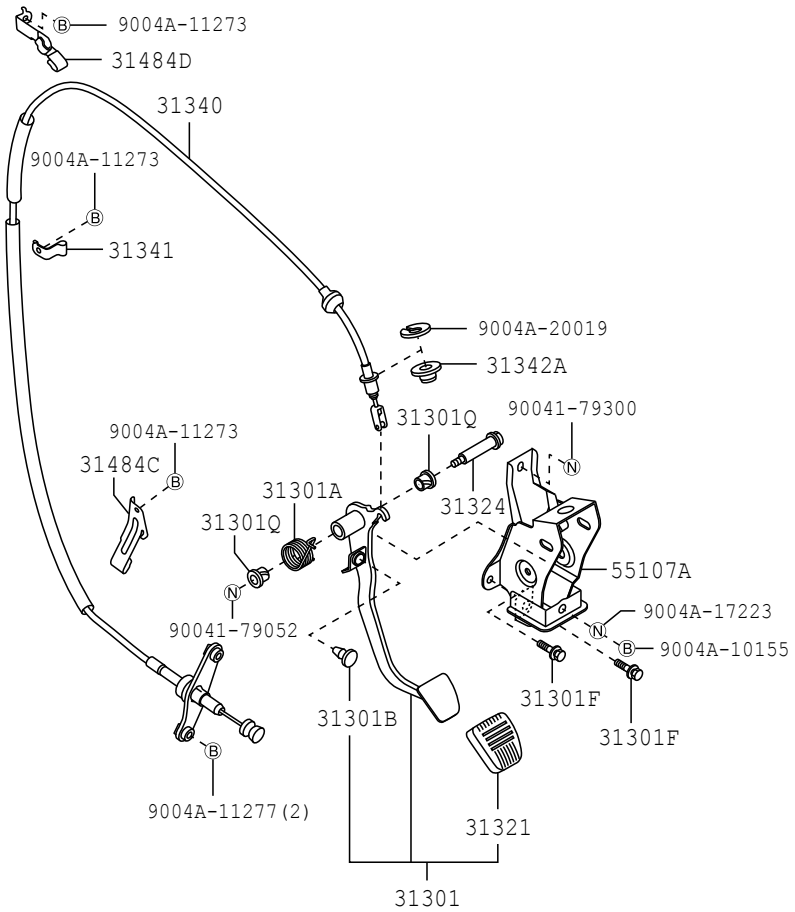

3102 312586-D

(1507-)F653..5F

CABLE TYPE

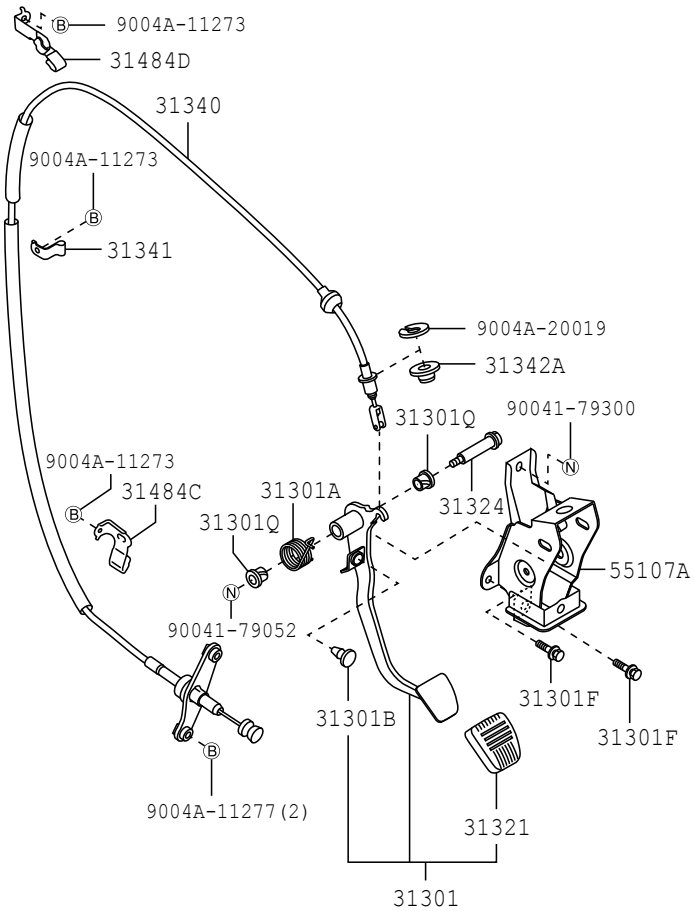

3102 313032

(1901-)F654..5F

HYDRAULIC TYPE ILLUST NO. 1 OF 2

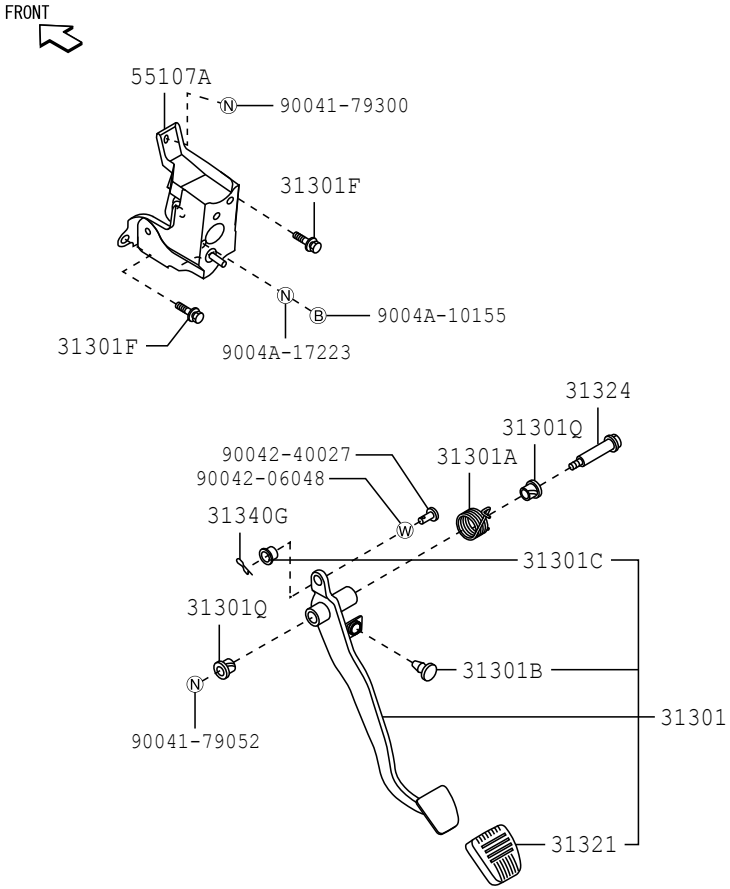

3102 313300

(1901-)F654..5F

HYDRAULIC TYPE ILLUST NO. 2 OF 2

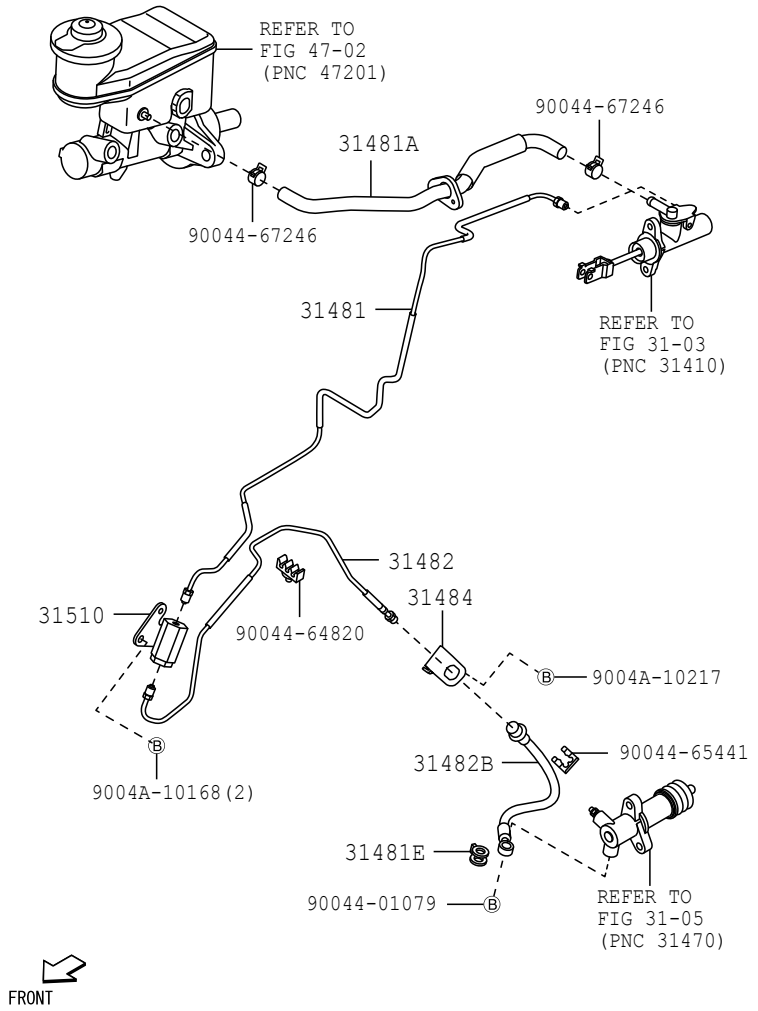

3102 313301

FIG.31-02 CLUTCH PEDAL & FLEXIBLE HOSE

PROD_DATE	MODELS	SPEC CODE	DESCRIPTION	R/P	PART NUMBER	QYT	REV_REF FR	REV_REF TO
	31301	PEDAL SUB-ASSY, CLUTCH						
1111 - 1507	F65#..5F				31310-BZ140-	1		
1507 - 1607	F650				31310-BZ230-	1		
1507 - 1901	F653..5F				31310-BZ230-	1		
1901 -	F653..5F				31310-BZ230-	1		
1901 -	F654..5F				31310-BZ380-	1		
	31301A	SPRING(FOR CLUTCH PEDAL)						
1111 - 1507	F65#..5F				31394-BZ010-	1		
1507 - 1607	F650				31394-BZ070-	1		
1507 - 1901	F653..5F				31394-BZ070-	1		
1901 -	F653..5F				31394-BZ070-	1		
1901 -	F654..5F				31394-BZ080-	1		
	31301B	CUSHION, NO.1(FOR CLUTCH PEDAL)						
1111 - 1507	F65#..5F				9004A-54003-	1		
1507 - 1607	F650				9004A-54003-	1		
1507 - 1901	F653..5F				9004A-54003-	1		
1901 -	F65#..5F				9004A-54003-	1		
	31301C	BUSH(FOR CLUTCH PEDAL)						
1901 -	F654..5F				90043-86123-	1		
	31301F	BOLT(FOR CLUTCH PEDAL STOPPER)						
1111 - 1507	F65#..5F				9004A-11219- # (91651-B0814-)	2 1		
1507 - 1607	F650				9004A-11219- # (91651-B0814-)	2 1		
1507 - 1901	F653..5F				9004A-11219- # (91651-B0814-)	2 1		

PROD_DATE	MODELS	SPEC CODE	DESCRIPTION	R/P	PART NUMBER	QYT	REV_REF FR	REV_REF TO
	+----------+							
	| 31301F | BOLT(FOR CLUTCH PEDAL STOPPER)							
	CONTINUED--+							
1901 -	F65#..5F				9004A-11219-	2		
				#	(91651-B0814-)	1		
	+----------+							
	| 31301Q | BUSH(FOR CLUTCH PEDAL SPRING)							
	+----------+							
1111 - 1507	F65#..5F				9004A-38021-	2		
1507 - 1607	F650				9004A-38021-	2		
1507 - 1901	F653..5F				9004A-38021-	2		
1901 -	F65#..5F				9004A-38021-	2		
	+----------+							
	| 31321 | PAD, CLUTCH PEDAL							
	+----------+							
1111 - 1507	F65#..5F				31321-BZ010-	1		
1507 - 1607	F650				31321-BZ010-	1		
1507 - 1901	F653..5F				31321-BZ010-	1		
1901 -	F65#..5F				31321-BZ010-	1		
	+----------+							
	| 31324 | SHAFT, CLUTCH PEDAL							
	+----------+							
1111 - 1507	F65#..5F				31324-B0010-	1		
1507 - 1607	F650				31324-B0010-	1		
1507 - 1901	F653..5F				31324-B0010-	1		
1901 -	F653..5F				31324-B0010-	1		
1901 -	F654..5F				47124-BZ020-	1		
	+----------+							
	| 31340 | CABLE ASSY, CLUTCH RELEASE							
	+----------+							
1111 - 1507	F650				31340-BZ120-	1		
1111 - 1507	F651..5F				31340-BZ130-	1		
1507 - 1607	F650				31340-BZ150-	1		
1507 - 1901	F653..5F				31340-BZ160-	1		
1901 -	F653..5F				31340-BZ160-	1		

FIG.31-02 CLUTCH PEDAL & FLEXIBLE HOSE

PROD_DATE	MODELS	SPEC CODE	DESCRIPTION	R/P	PART NUMBER	QYT	REV_REF FR	REV_REF TO
	+----------+							
	| 31340G | CLIP(FOR CLUTCH RELEASE CABLE)							
	+----------+							
1901 -	F654..5F				90044-68076-	1		
	+----------+							
	| 31341 | BRACKET, CLUTCH CABLE							
	+----------+							
1111 - 1507	F65#..5F				31341-BZ020-	1		
1507 - 1607	F650				31341-BZ020-	1		
1507 - 1901	F653..5F				31341-BZ020-	1		
1901 -	F653..5F				31341-BZ020-	1		
	+----------+							
	| 31342A | BUSH(FOR CLUTCH RELEASE CABLE)							
	+----------+							
1111 - 1507	F65#..5F				9004A-38070-	1		
1507 - 1607	F650				9004A-38070-	1		
1507 - 1901	F653..5F				9004A-38070-	1		
1901 -	F653..5F				9004A-38070-	1		
	+----------+							
	| 31481 | TUBE, CLUTCH MASTER CYLINDER TO FLEXIBLE HOSE							
	+----------+							
1901 -	F654..5F				31482-BZ150-	1		
	+----------+							
	| 31481A | HOSE, CLUTCH, NO.1							
	+----------+							
1901 -	F654..5F				31434-BZ100-	1		
	+----------+							
	| 31481E | GASKET(FOR CLUTCH MASTER CYLINDER TO FLEXIBLE HOSE TUBE)							
	+----------+							
1901 -	F654..5F				47389-97201-	1		
	+----------+							
	| 31482 | TUBE, CLUTCH RELEASE CYLINDER TO FLEXIBLE HOSE							
	+----------+							
1901 -	F654..5F				31482-BZ170-	1		
	+----------+							
	| 31482B | HOSE, CLUTCH, NO.2							
	+----------+							
1901 -	F654..5F				9004A-94079-	1		

FIG.31-02 CLUTCH PEDAL & FLEXIBLE HOSE

PROD_DATE	MODELS	SPEC CODE	DESCRIPTION	R/P	PART NUMBER	QYT	REV_REF FR	REV_REF TO
	+----------+							
	| 31484 |		BRACKET, FLEXIBLE HOSE(FOR CLUTCH)					
	+----------+							
1901 -	F654..5F				31484-BZ010-	1		
	+----------+							
	| 31484C |		BRACKET, CLUTCH TUBE, NO.1					
	+----------+							
1111 - 1507	F650				31341-BZ080-	1		
1111 - 1507	F651..5F				31341-BZ090-	1		
1507 - 1607	F650				31341-BZ080-	1		
1507 - 1901	F653..5F				31341-BZ210-	1		
1901 -	F653..5F				31341-BZ210-	1		
	+----------+							
	| 31484D |		BRACKET, CLUTCH TUBE, NO.2					
	+----------+							
1111 - 1507	F65#..5F				31341-BZ010-	1		
1507 - 1511	F653..5F				31341-BZ160-	1		
1507 - 1607	F650				31341-BZ160-	1		
1512 - 1901	F653..5F				31341-BZ300-	1		
1901 -	F653..5F				31341-BZ300-	1		
	+----------+							
	| 31510 |		ORIFICE ASSY, CLUTCH					
	+----------+							
1901 -	F654..5F				31510-B0021-	1		
	+----------+							
	| 55107A |		SUPPORT SUB-ASSY, CLUTCH PEDAL					
	+----------+							
1111 - 1507	F65#..5F				55107-BZ100-	1		
1507 - 1607	F650				55107-BZ190-	1		
1507 - 1901	F653..5F				55107-BZ190-	1		
1901 -	F653..5F				55107-BZ190-	1		
1901 -	F654..5F				55107-BZ330-	1		

(1901-)F654..5F

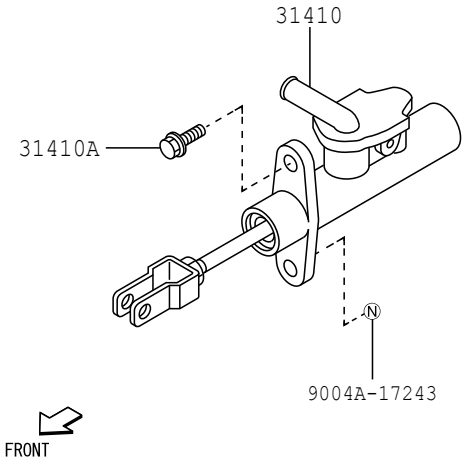

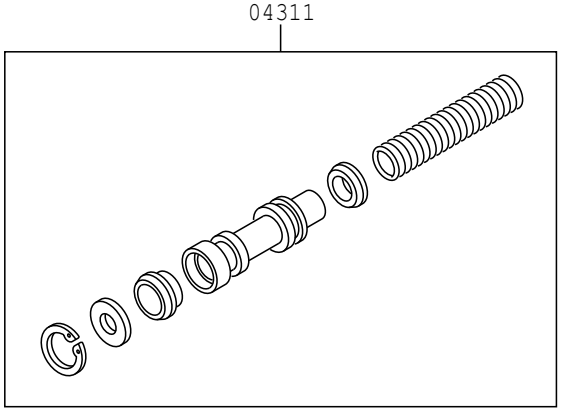

3103 313299

FIG.31-03 CLUTCH MASTER CYLINDER

PROD_DATE	MODELS	SPEC CODE	DESCRIPTION	R/P	PART NUMBER	QYT	REV_REF FR	REV_REF TO
	+----------+							
	| 04311 |	CYLINDER KIT, CLUTCH MASTER						
	+----------+							
1901 -	F654..5F				04311-B4010-	1		
	+----------+							
	| 31410 |	CYLINDER ASSY, CLUTCH MASTER						
	+----------+							
1901 -	F654..5F				31420-BZ050-	1		
				#	(31420-87402-)	1		
	+----------+							
	| 31410A |	BOLT(FOR CLUTCH MASTER CYLINDER SETTING)						
	+----------+							
1901 -	F654..5F				9004A-10217-	1		
				#	(91551-80816-)	1		

FIG.31-05 CLUTCH RELEASE CYLINDER

(1901-)F654..5F

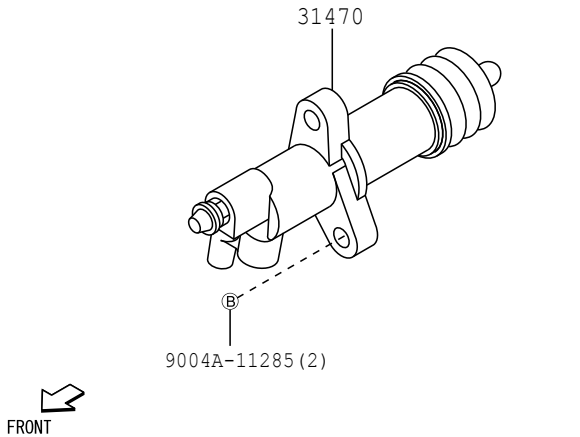

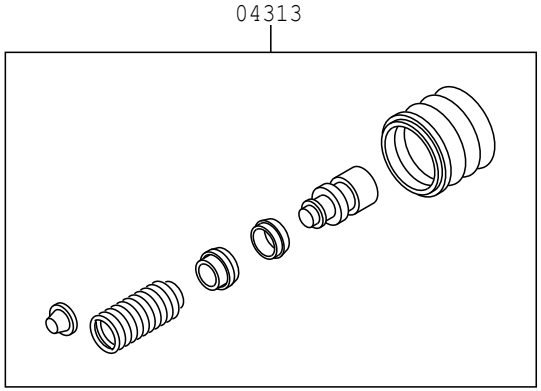

3105

313298

FIG.31-05 CLUTCH RELEASE CYLINDER

PROD_DATE	MODELS	SPEC CODE	DESCRIPTION	R/P	PART NUMBER	QYT	REV_REF FR	REV_REF TO
	04313	CYLINDER KIT, CLUTCH RELEASE						
1901 -	F654..5F				04313-14030-	1		
	31470	CYLINDER ASSY, CLUTCH RELEASE						
1901 -	F654..5F				31470-BZ050-	1		
				#	(31470-B0010-)	1		

FIG.33-01 TRANSAXLE OR TRANSMISSION ASSY & GASKET KIT (MTM)

(1111-1507)5F

M5S-B9, M5S-C9

M5S-B9

M5S-C9

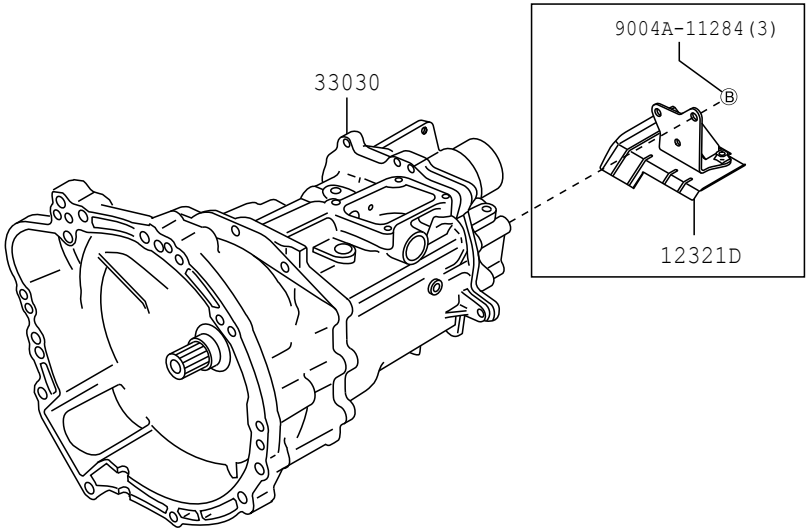

3301

334475-E

FIG.33-01 TRANSAXLE OR TRANSMISSION ASSY & GASKET KIT (MTM)

(1507-)5F

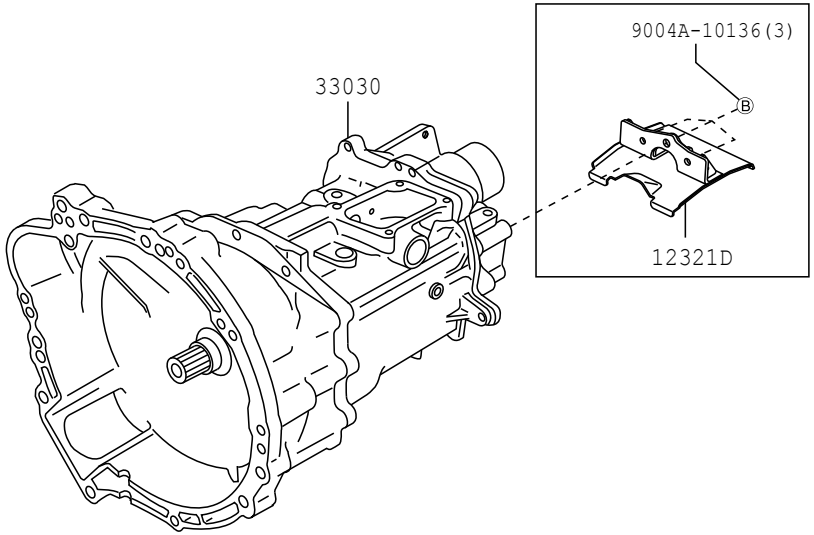

3301

335305

FIG.33-01 TRANSAXLE OR TRANSMISSION ASSY & GASKET KIT (MTM)

PROD_DATE	MODELS	SPEC CODE	DESCRIPTION	R/P	PART NUMBER	QYT	REV_REF	
							FR	TO
	+----------+							
	| 12321D | BRACKET, ENGINE MOUNTING, REAR							
	+----------+							
1111 - 1507	K3VE,EJVE..F65#..5F				12321-BZ120-	1		
1507 - 1607	EJVE..F650				12321-BZ250-	1		
1507 - 1901	1NRVE..F653..5F				12321-BZ250-	1		
1901 -	1NRVE,2NRVE..F65#..5F				12321-BZ250-	1		
	+----------+							
	| 33030 | TRANSMISSION UNIT ASSY, MANUAL							
	+----------+							
1111 - 1507	F650				33030-BZ320-	1		
1111 - 1507	F651..5F				33030-BZ330-	1		
1507 - 1607	F650				33030-BZ200-	1		
1507 - 1901	F653..5F				33030-BZ210-	1		
1901 -	F653..5F				33030-BZ210-	1		
1901 -	F654..5F				33030-BZ340-	1		

FIG.33-02 CLUTCH HOUSING & TRANSMISSION CASE (MTM)

(1111-)F651 ; (1507-)F653,654..5F

M5S-C9 ILLUST NO. 1 OF 2

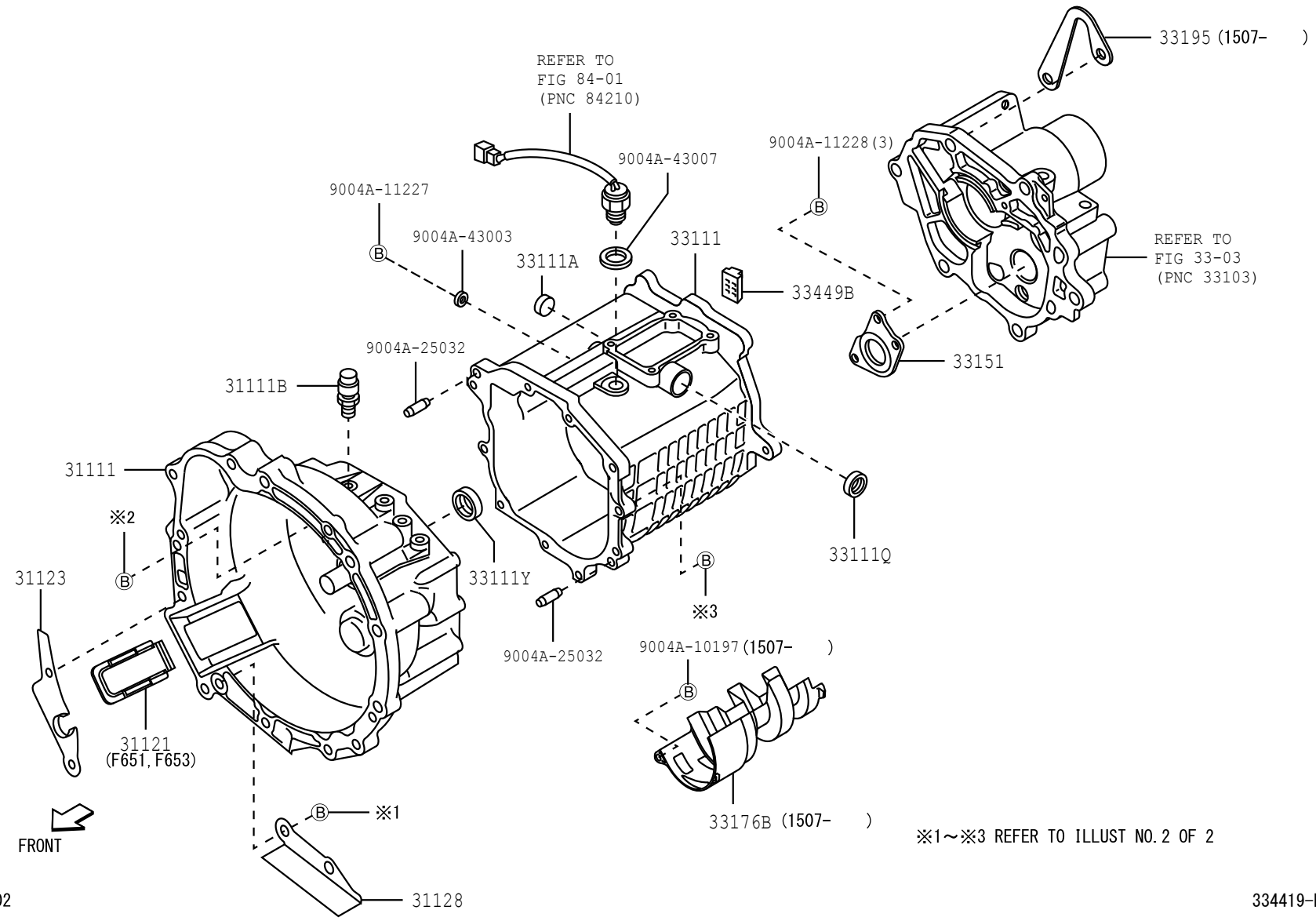

※1～※3 REFER TO ILLUST NO.2 OF 2

3302

334419-E

FIG.33-02 CLUTCH HOUSING & TRANSMISSION CASE (MTM)

(1111-1507)F650

M5S-B9 ILLUST NO. 1 OF 2

M5S-B9

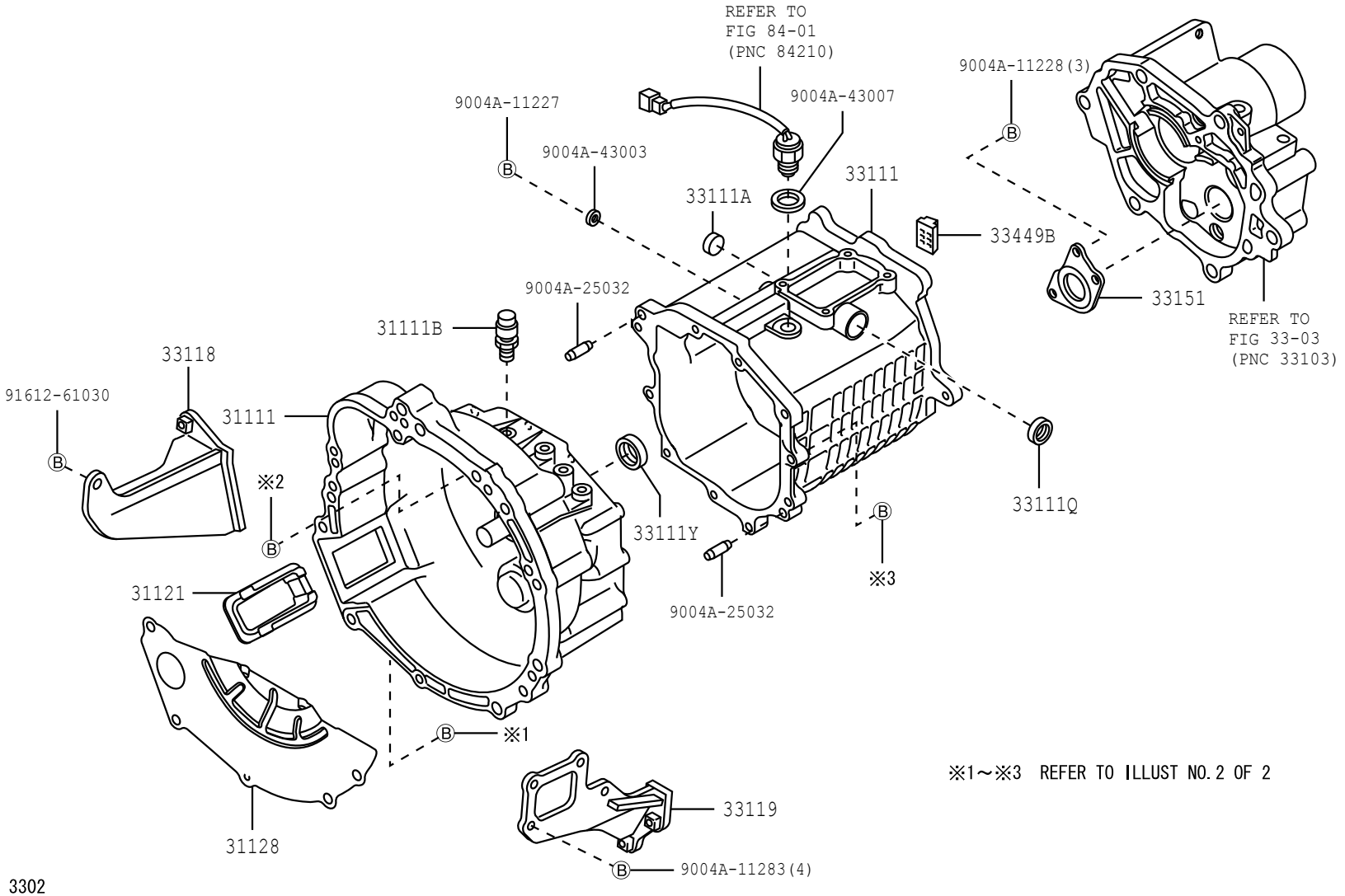

※1～※3 REFER TO ILLUST NO.2 OF 2

3302

334422-E

(1111-1507)F650

M5S-B9 ILLUST NO. 2 OF 2

M5S-B9

※1

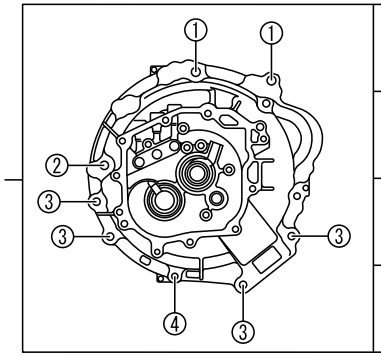

①	Ⓑ	90041-19968(2)(-1211) 9004A-11289(2)(1212-)
②	Ⓑ	90041-19279(-1209) 9004A-11279(1210-)
③	Ⓑ	9004A-11215(4)
④	Ⓑ	91611-60835

※2

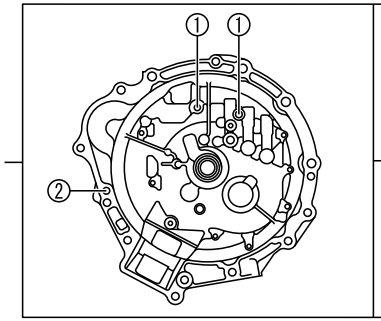

①	Ⓑ	9004A-11232(2)
②	Ⓑ	91619-61250(-1209) 9004A-11278(1210-)

※3

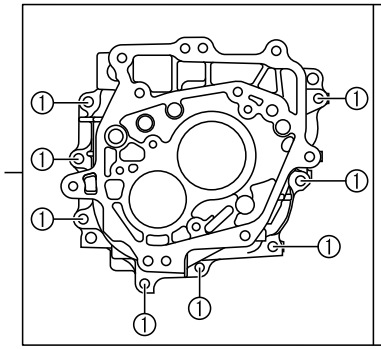

①	Ⓑ	9004A-11231(8)

(1111-1507)F651

M5S-C9 ILLUST NO. 2 OF 2

M5S-C9

※1

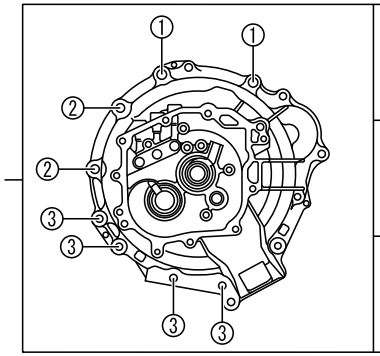

①	Ⓑ	90041-19968(2)(-1211) 9004A-11289(2)(1212-)
②	Ⓑ	90041-19279(2)(-1209) 9004A-11279(2)(1210-)
③	Ⓑ	9004A-11215(4)

※2

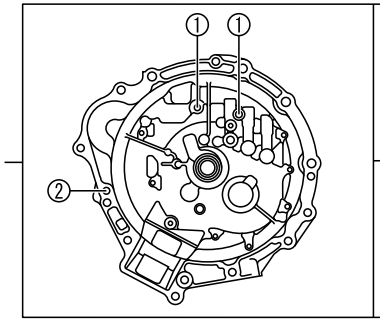

①	Ⓑ	9004A-11232(2)
②	Ⓑ	91619-61250(-1209) 9004A-11278(1210-)

※3

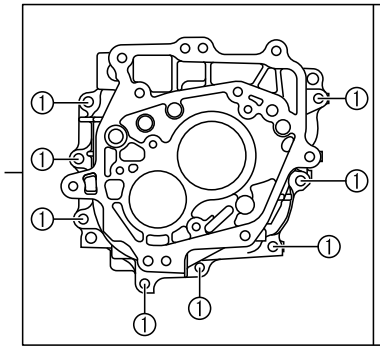

①	Ⓑ	9004A-11231(8)

(1507-)F653, 654. . 5F

ILLUST NO. 2 OF 2

※1

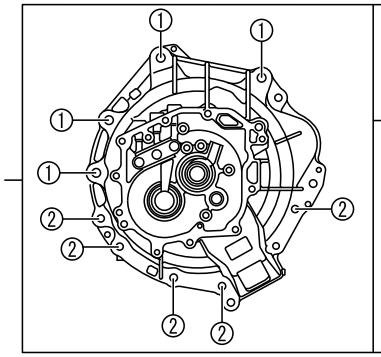

①	Ⓑ—— 9004A-11289(4)
②	Ⓑ—— 9004A-11215(5)

※2

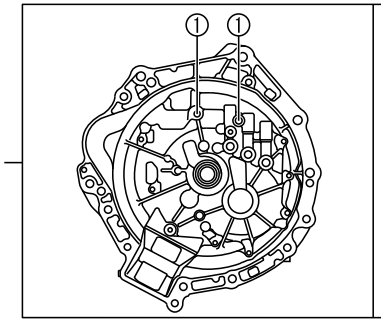

①	Ⓑ—— 9004A-11232(2)

※3

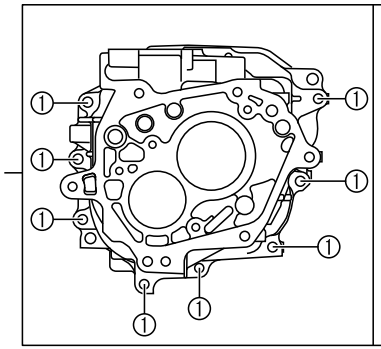

①	Ⓑ—— 9004A-11231(8)

3302 335259-A

FIG. 33-02 CLUTCH HOUSING & TRANSMISSION CASE (MTM)

(1507-1607)F650

ILLUST NO. 2 OF 2

※1

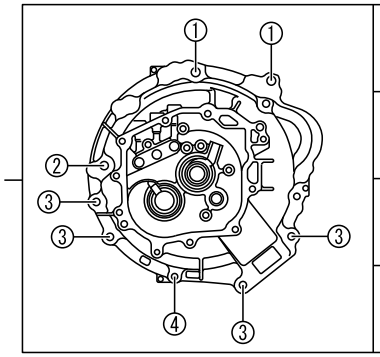

①	Ⓑ—— 9004A-11289(2)
②	Ⓑ—— 9004A-11279
③	Ⓑ—— 9004A-11215(4)
④	Ⓑ—— 91611-60835

※2

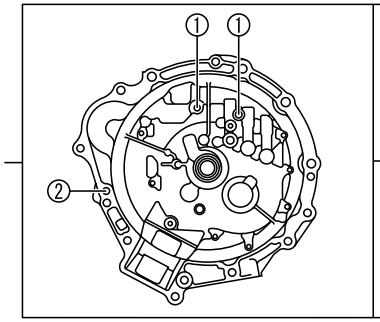

①	Ⓑ—— 9004A-11232(2)
②	Ⓑ—— 9004A-11278

※3

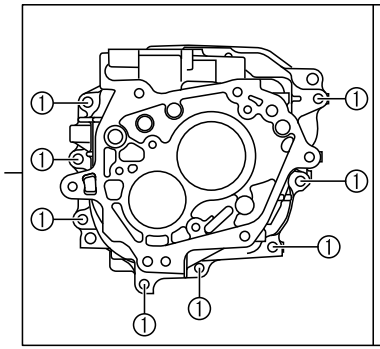

①	Ⓑ—— 9004A-11231(8)

3302 335260

FIG.33-02 CLUTCH HOUSING & TRANSMISSION CASE (MTM)

(1507-1607)F650

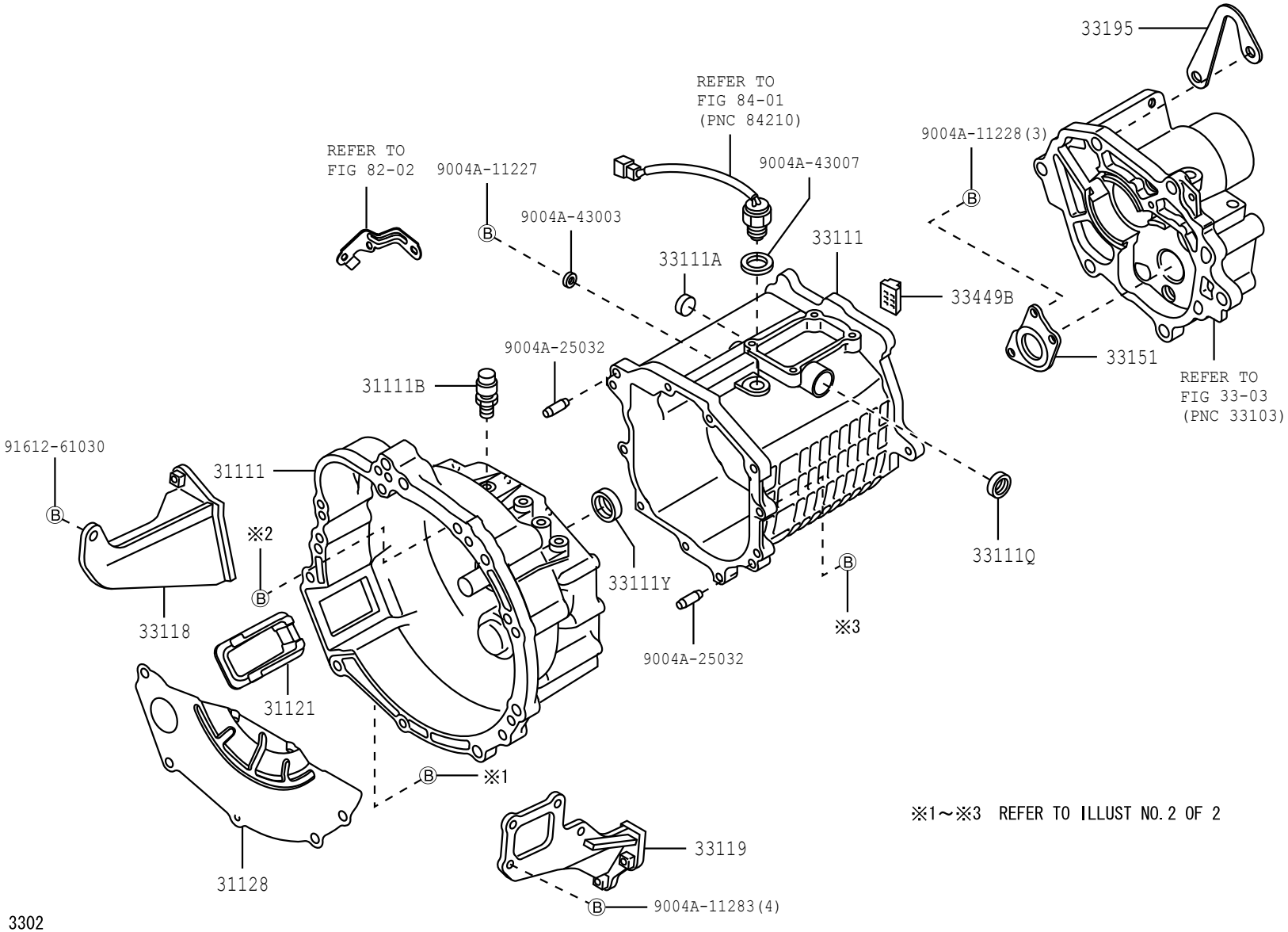

※1～※3 REFER TO ILLUST NO.2 OF 2

3302

335308-B

PROD_DATE	MODELS	SPEC CODE	DESCRIPTION	R/P	PART NUMBER	QYT	REV_REF FR	REV_REF TO
	+----------+							
	| 31111 | HOUSING, CLUTCH							
	+----------+							
1111 - 1507	F650				31111-87402-	1		
1111 - 1507	F651..5F				31111-BZ010-	1		
1507 - 1607	F650				31111-87402-	1		
1507 - 1901	F653..5F				31111-BZ040-	1		
1901 -	F653..5F				31111-BZ040-	1		
1901 -	F654..5F				31111-BZ050-	1		
	+----------+							
	| 31111B | PLUG(FOR CLUTCH HOUSING)							
	+----------+							
1111 - 1507	F65#..5F				9004A-93003-	1		
				#	(90049-15026-)	1		
1507 - 1607	F650				9004A-93003-	1		
				#	(90049-15026-)	1		
1507 - 1901	F653..5F				9004A-93003-	1		
				#	(90049-15026-)	1		
1901 -	F65#..5F				9004A-93003-	1		
				#	(90049-15026-)	1		
	+----------+							
	| 31121 | COVER, CLUTCH HOUSING, NO.1							
	+----------+							
1111 - 1507	F651..5F				31121-BZ010-	1		
1111 - 1507	F650				31121-BZ020-	1		
				#	(31121-B5020-)	1		
1507 - 1602	F650				31121-BZ020-	1		
				#	(31121-B5020-)	1		
1603 - 1607	F650				31121-BZ050-	1		
				#	(31121-B5020-)	1		
1507 - 1901	F653..5F				31121-BZ010-	1		
1901 -	F653..5F				31121-BZ010-	1		
	+----------+							
	| 31123 | COVER, CLUTCH HOUSING, NO.2							
	+----------+							
1111 - 1507	F651..5F				31123-BZ010-	1		

FIG.33-02 CLUTCH HOUSING & TRANSMISSION CASE (MTM)

PROD_DATE	MODELS	SPEC CODE	DESCRIPTION	R/P	PART NUMBER	QYT	REV_REF FR	REV_REF TO
	+----------+							
	| 31128 | COVER, CLUTCH HOUSING UNDER							
	+----------+							
1111 - 1507	F651..5F				31128-BZ010-	1		
1111 - 1507	F650				31128-BZ020-	1		
1507 - 1607	F650				31128-BZ020-	1		
	+----------+							
	| 33111 | CASE, MANUAL TRANSMISSION							
	+----------+							
1111 - 1507	F65#..5F				33111-BZ020-	1		
1507 - 1607	F650				33111-BZ090-	1		
1507 - 1901	F653..5F				33111-BZ090-	1		
1901 -	F65#..5F				33111-BZ090-	1		
	+----------+							
	| 33111A | PLUG, MANUAL TRANSMISSION CASE							
	+----------+							
1111 - 1507	F65#..5F				9004A-33016-	1		
				#	(90043-31025-)	1		
1507 - 1607	F650				9004A-33016-	1		
				#	(90043-31025-)	1		
1507 - 1901	F653..5F				9004A-33016-	1		
				#	(90043-31025-)	1		
1901 -	F65#..5F				9004A-33016-	1		
				#	(90043-31025-)	1		
	+----------+							
	| 33111Q | SEAL, OIL(FOR TRANSMISSION CASE)							
	+----------+							
1111 - 1507	F65#..5F				9004A-31015-	1		
1507 - 1607	F650				9004A-31015-	1		
1507 - 1901	F653..5F				9004A-31015-	1		
1901 -	F65#..5F				9004A-31015-	1		
	+----------+							
	| 33111Y | SEAL, OIL(FOR TRANSMISSION CASE)							
	+----------+							
1111 - 1507	F65#..5F				9004A-31013-	1		
1507 - 1607	F650				9004A-31013-	1		
1507 - 1901	F653..5F				9004A-31013-	1		

PROD_DATE	MODELS	SPEC CODE	DESCRIPTION	R/P	PART NUMBER	QYT	REV_REF FR	REV_REF TO
	+----------+							
	| 33111Y | SEAL, OIL(FOR TRANSMISSION CASE)							
	CONTINUED--+							
1901 -	F65#..5F				9004A-31013-	1		
	+----------+							
	| 33118 | PLATE, STIFFENER, RH(MTM)							
	+----------+							
1111 - 1507	F650				33118-BZ070-	1		
1507 - 1607	F650				33118-BZ070-	1		
	+----------+							
	| 33119 | PLATE, STIFFENER, LH(MTM)							
	+----------+							
1111 - 1507	F650				33119-BZ010-	1		
1507 - 1607	F650				33119-BZ010-	1		
	+----------+							
	| 33151 | RETAINER, OUTPUT SHAFT REAR BEARING(MTM)							
	+----------+							
1111 - 1507	F65#..5F				33151-BZ010-	1		
				#	(33151-97501-)	1		
1507 - 1607	F650				33151-BZ010-	1		
				#	(33151-97501-)	1		
1507 - 1901	F653..5F				33151-BZ010-	1		
				#	(33151-97501-)	1		
1901 -	F65#..5F				33151-BZ010-	1		
				#	(33151-97501-)	1		
	+----------+							
	| 33176B | SEPARATOR, TRANSMISSION OIL(MTM)							
	+----------+							
1507 - 1901	F653..5F				33176-BZ010-	1		
1901 -	F65#..5F				33176-BZ010-	1		
	+----------+							
	| 33195 | HANGER, TRANSMISSION CASE, NO.1							
	+----------+							
1507 - 1607	F650				33195-BZ010-	1		
1507 - 1901	F653..5F				33195-BZ010-	1		
1901 -	F65#..5F				33195-BZ010-	1		

FIG.33-02 CLUTCH HOUSING & TRANSMISSION CASE (MTM)

PROD_DATE	MODELS	SPEC CODE	DESCRIPTION	R/P	PART NUMBER	QYT	REV_REF FR	REV_REF TO
	+----------+							
	| 33449B | MAGNET, TRANSMISSION							
	+----------+							
1111 - 1507	F65#..5F				33449-BZ010-	1		
				#	(33449-87501-)	1		
1507 - 1512	F65#..5F				33449-BZ010-	1		
				#	(33449-87501-)	1		
1601 - 1607	F650				33449-BZ060-	1		
1601 - 1901	F653..5F				33449-BZ060-	1		
1901 -	F65#..5F				33449-BZ060-	1		

FIG. 33-03 EXTENSION HOUSING (MTM)

(1111-1507)5F

M5S-B9, M5S-C9

M5S-B9

M5S-C9

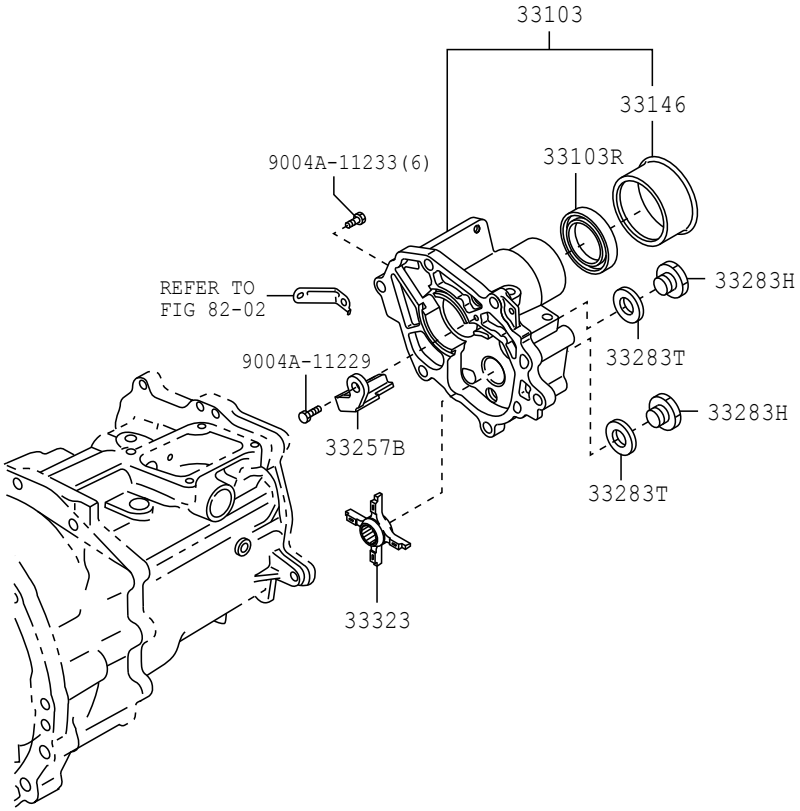

3303

334476

FIG. 33-03 EXTENSION HOUSING (MTM)

(1507-)5F

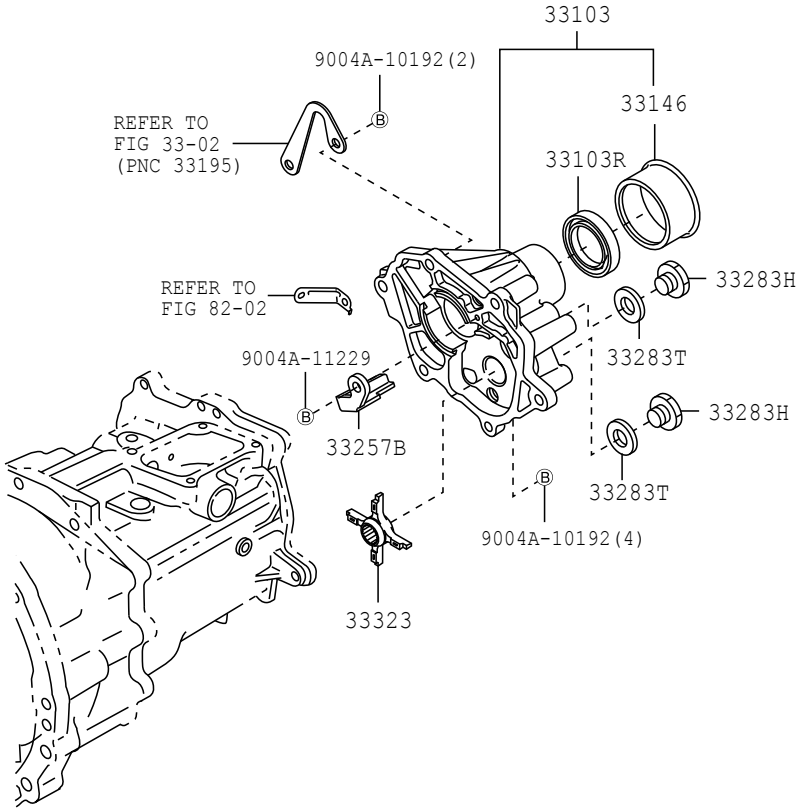

3303

335261

PROD_DATE	MODELS	SPEC CODE	DESCRIPTION	R/P	PART NUMBER	QYT	REV_REF FR	REV_REF TO
	+----------+							
	| 33103 | HOUSING SUB-ASSY, EXTENSION(MTM)							
	+----------+							
1111 - 1507	F65#..5F				33103-BZ020-	1		
1507 - 1607	F650				33103-BZ030-	1		
1507 - 1901	F653..5F				33103-BZ030-	1		
1901 -	F65#..5F				33103-BZ030-	1		
	+----------+							
	| 33103R | SEAL, OIL(FOR MANUAL TRANSMISSION EXTENSION HOUSING)							
	+----------+							
1111 - 1507	F65#..5F				9004A-31014-	1		
1507 - 1607	F650				9004A-31014-	1		
1507 - 1901	F653..5F				9004A-31014-	1		
1901 -	F65#..5F				9004A-31014-	1		
	+----------+							
	| 33146 | DEFLECTOR, EXTENSION HOUSING DUST(MTM)							
	+----------+							
1111 - 1507	F65#..5F				33146-BZ040-	1		
1507 - 1607	F650				33146-BZ040-	1		
1507 - 1901	F653..5F				33146-BZ040-	1		
1901 -	F65#..5F				33146-BZ040-	1		
	+----------+							
	| 33257B | PLATE, GEAR OIL							
	+----------+							
1111 - 1507	F65#..5F				35345-BZ010-	1		
				#	(35257-87501-)	1		
1507 - 1607	F650				35345-BZ010-	1		
				#	(35257-87501-)	1		
1507 - 1901	F653..5F				35345-BZ010-	1		
				#	(35257-87501-)	1		
1901 -	F65#..5F				35345-BZ010-	1		
				#	(35257-87501-)	1		
	+----------+							
	| 33283H | PLUG, W/HEAD STRAIGHT SCREW							
	+----------+							
1111 - 1507	F65#..5F				9004A-34010-	2		
				#	(90341-16012-000)	1		

FIG.33-03 EXTENSION HOUSING (MTM)

PROD_DATE	MODELS	SPEC CODE	DESCRIPTION	R/P	PART NUMBER	QYT	REV_REF FR	REV_REF TO
	+----------+							
	| 33283H | PLUG, W/HEAD STRAIGHT SCREW							
	CONTINUED--+							
1507 - 1607	F650				9004A-34010-	2		
				#	(90341-16012-000)	1		
1507 - 1901	F653..5F				9004A-34010-	2		
				#	(90341-16012-000)	1		
1901 -	F65#..5F				9004A-34010-	2		
				#	(90341-16012-000)	1		
	+----------+							
	| 33283T | GASKET (FOR HEAD STRAIGHT SCREW PLUG)							
	+----------+							
1111 - 1507	F65#..5F				9004A-43006-	2		
1507 - 1607	F650				9004A-43006-	2		
1507 - 1901	F653..5F				9004A-43006-	2		
1901 -	F65#..5F				9004A-43006-	2		
	+----------+							
	| 33323 | SLINGER, OUTPUT SHAFT OIL							
	+----------+							
1111 - 1507	F65#..5F				33467-BZ020-	1		
				#	(33467-87501-)	1		
1507 - 1607	F650				33467-BZ020-	1		
				#	(33467-87501-)	1		
1507 - 1901	F653..5F				33467-BZ020-	1		
				#	(33467-87501-)	1		
1901 -	F65#..5F				33467-BZ020-	1		
				#	(33467-87501-)	1		

FIG.33-04 SPEEDOMETER DRIVEN GEAR (MTM)

(1901-)F654..5F

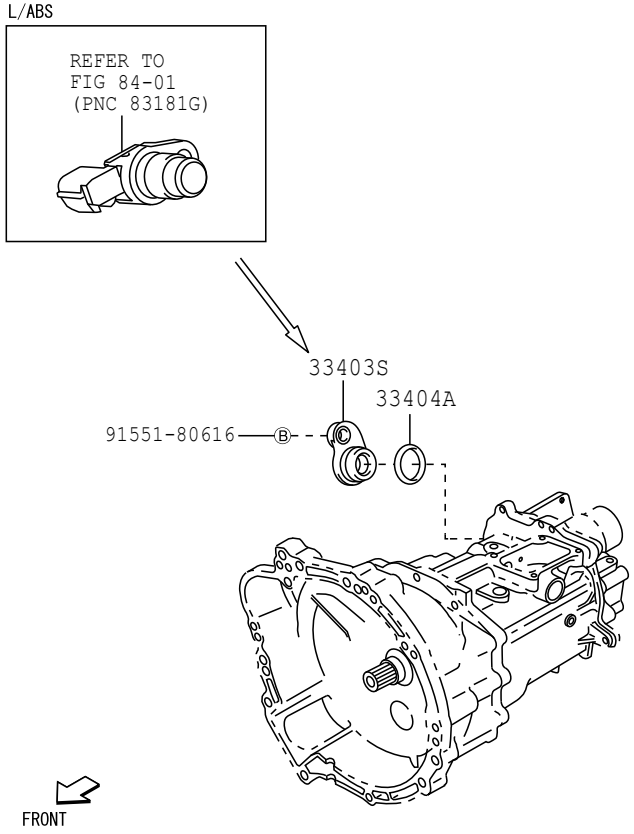

3304

335898

FIG.33-04 SPEEDOMETER DRIVEN GEAR (MTM)

PROD_DATE	MODELS	SPEC CODE	DESCRIPTION	R/P	PART NUMBER	QYT	REV_REF FR	REV_REF TO
	+----------+							
	| 33403S |		PLUG(FOR MTM SPEEDOMETER DRIVEN HOLE)					
	+----------+							
1901 -	F654..5F				35136-BZ010-	1		
	+----------+							
	| 33404A |		RING, O (FOR MTM SPEEDOMETER SHAFT SLEEVE					
	+----------+		)					
1901 -	F654..5F				9004A-30049-	1		

FIG.33-05 TRANSMISSION GEAR (MTM)

(1111-1507)5F

M5S-B9, M5S-C9

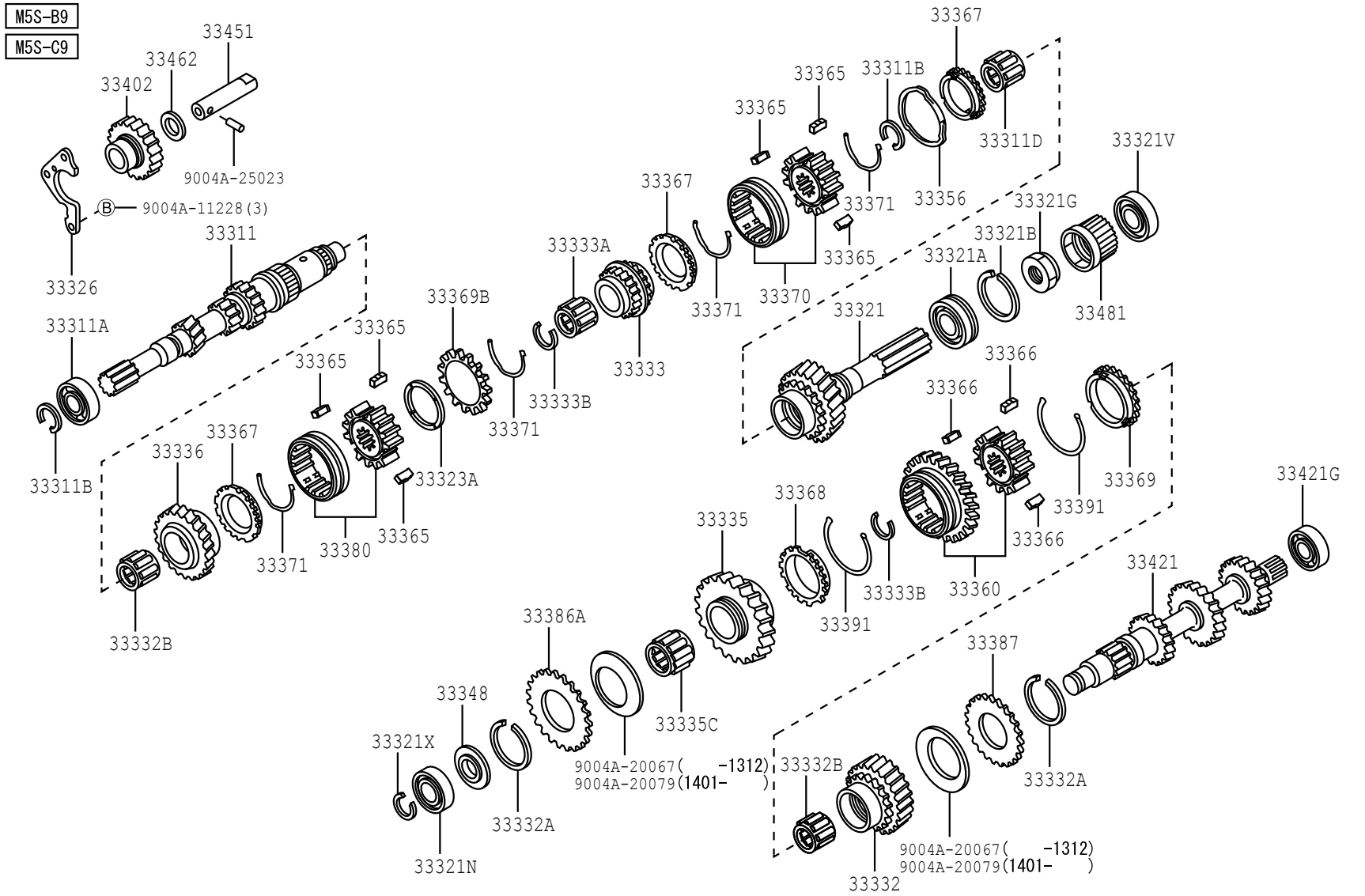

FIG.33-05 TRANSMISSION GEAR (MTM)

(1507-)5F

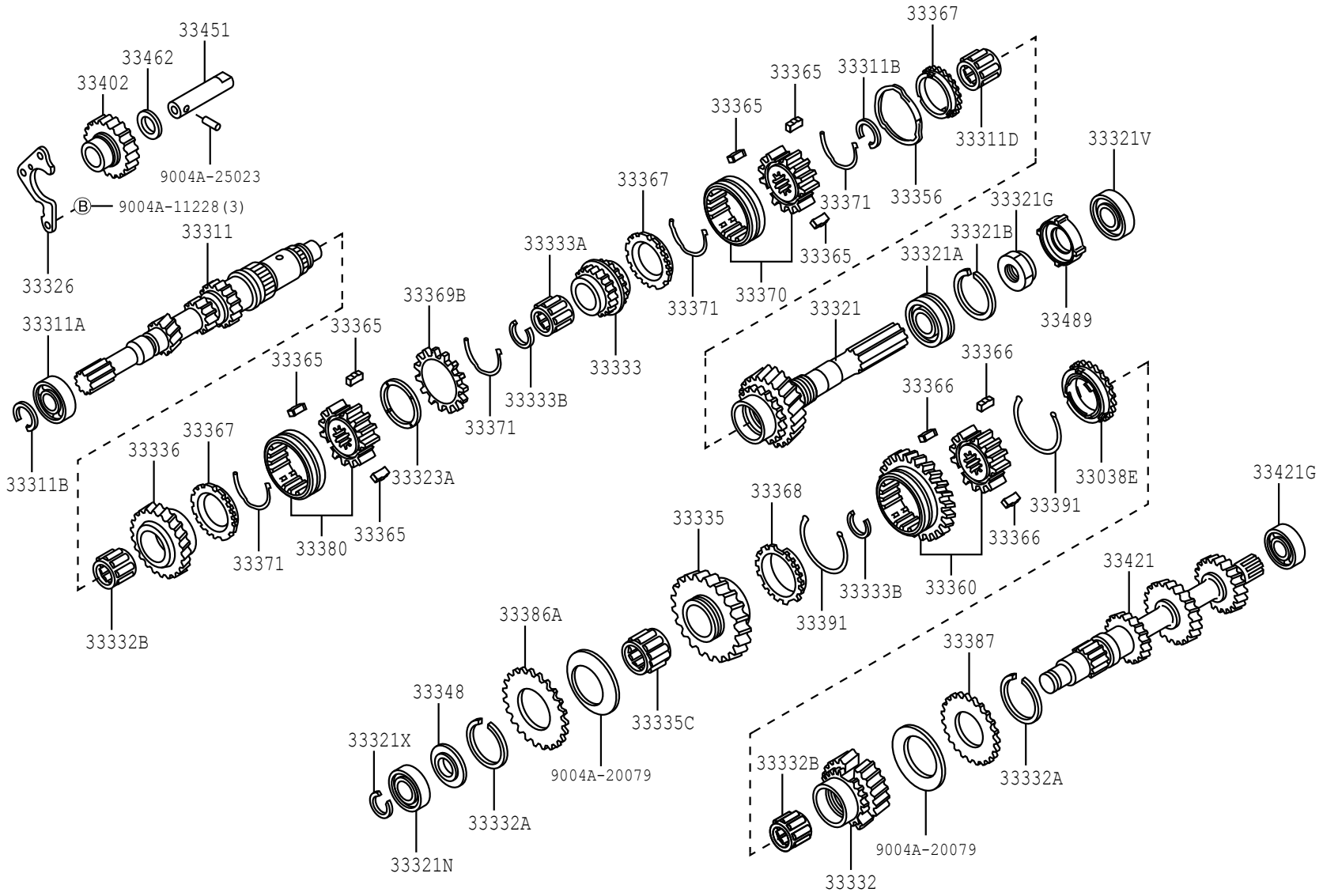

3305

335254

PROD_DATE	MODELS	SPEC CODE	DESCRIPTION	R/P	PART NUMBER	QYT	REV_REF FR	REV_REF TO
	+----------+							
	| 33038E | RING SET, SYNCHRONIZER, NO.2							
	+----------+							
1507 - 1607	F650				33038-BZ030-	1		
1507 - 1901	F653..5F				33038-BZ030-	1		
1901 -	F65#..5F				33038-BZ030-	1		
	+----------+							
	| 33311 | SHAFT, INPUT							
	+----------+							
1111 - 1507	F650				33311-BZ010-	1		
1111 - 1507	F651..5F				33311-BZ020-	1		
1507 - 1607	F650				33311-BZ010-	1		
1507 - 1901	F653..5F				33311-BZ020-	1		
1901 -	F653..5F				33311-BZ020-	1		
1901 -	F654..5F				33311-BZ040-	1		
				#	(33311-B4010-)	1		
	+----------+							
	| 33311A | BEARING (FOR INPUT SHAFT FRONT)							
	+----------+							
1111 - 1507	F65#..5F				9004A-36047-	1		
				#	(90043-63246-)	1		
1507 - 1809	F65#..5F				9004A-36047-	1		
				#	(90043-63246-)	1		
1810 - 1901	F653..5F				9004A-36109-	1		
1901 -	F65#..5F				9004A-36109-	1		
	+----------+							
	| 33311B | RING, SHAFT SNAP (FOR FRONT BEARING)							
	+----------+							
1111 - 1312	F65#..5F		T=2.06		9004A-52046-	2		
				#	(90045-20271-)	1		
1111 - 1312	F65#..5F		T=2.02		9004A-52047-	2		
				#	(90045-20272-)	1		
1111 - 1312	F65#..5F		T=1.98		9004A-52048-	2		
				#	(90045-20273-)	1		
1111 - 1312	F65#..5F		T=1.94		9004A-52049-	2		
				#	(90045-20274-)	1		

FIG.33-05 TRANSMISSION GEAR (MTM)

PROD_DATE	MODELS	SPEC CODE	DESCRIPTION	R/P	PART NUMBER	QYT	REV_REF FR	REV_REF TO
	+----------+							
	| 33311B | RING, SHAFT SNAP (FOR FRONT BEARING)							
	CONTINUED--+							
1111 - 1312	F65#..5F		T=1.90		9004A-52050-	2		
				#	(90045-20275-)	1		
1111 - 1312	F65#..5F		T=1.86		9004A-52051-	2		
				#	(90045-20276-)	1		
1111 - 1312	F65#..5F		T=1.82		9004A-52052-	2		
				#	(90045-20277-)	1		
1111 - 1312	F65#..5F		T=1.78		9004A-52053-	2		
				#	(90045-20278-)	1		
1401 - 1507	F65#..5F		T=2.06		9004A-52079-	2		
				#	(90045-20271-)	1		
1401 - 1507	F65#..5F		T=2.02		9004A-52080-	2		
				#	(90045-20272-)	1		
1401 - 1507	F65#..5F		T=1.98		9004A-52081-	2		
				#	(90045-20273-)	1		
1401 - 1507	F65#..5F		T=1.94		9004A-52082-	2		
				#	(90045-20274-)	1		
1401 - 1507	F65#..5F		T=1.90		9004A-52083-	2		
				#	(90045-20275-)	1		
1401 - 1507	F65#..5F		T=1.86		9004A-52084-	2		
				#	(90045-20276-)	1		
1401 - 1507	F65#..5F		T=1.82		9004A-52085-	2		
				#	(90045-20277-)	1		
1401 - 1507	F65#..5F		T=1.78		9004A-52086-	2		
				#	(90045-20278-)	1		
1507 - 1607	F650		T=2.06		9004A-52079-	2		
				#	(90045-20271-)	1		
1507 - 1607	F650		T=2.02		9004A-52080-	2		
				#	(90045-20272-)	1		
1507 - 1607	F650		T=1.98		9004A-52081-	2		
				#	(90045-20273-)	1		
1507 - 1607	F650		T=1.94		9004A-52082-	2		
				#	(90045-20274-)	1		
1507 - 1607	F650		T=1.90		9004A-52083-	2		
				#	(90045-20275-)	1		

PROD_DATE	MODELS	SPEC CODE	DESCRIPTION	R/P	PART NUMBER	QYT	REV_REF FR	REV_REF TO
	+----------+							
	| 33311B | RING, SHAFT SNAP (FOR FRONT BEARING)							
	CONTINUED--+							
1507 - 1607	F650		T=1.86		9004A-52084-	2		
				#	(90045-20276-)	1		
1507 - 1607	F650		T=1.82		9004A-52085-	2		
				#	(90045-20277-)	1		
1507 - 1607	F650		T=1.78		9004A-52086-	2		
				#	(90045-20278-)	1		
1507 - 1901	F653..5F		T=2.06		9004A-52079-	2		
				#	(90045-20271-)	1		
1507 - 1901	F653..5F		T=2.02		9004A-52080-	2		
				#	(90045-20272-)	1		
1507 - 1901	F653..5F		T=1.98		9004A-52081-	2		
				#	(90045-20273-)	1		
1507 - 1901	F653..5F		T=1.94		9004A-52082-	2		
				#	(90045-20274-)	1		
1507 - 1901	F653..5F		T=1.90		9004A-52083-	2		
				#	(90045-20275-)	1		
1507 - 1901	F653..5F		T=1.86		9004A-52084-	2		
				#	(90045-20276-)	1		
1507 - 1901	F653..5F		T=1.82		9004A-52085-	2		
				#	(90045-20277-)	1		
1507 - 1901	F653..5F		T=1.78		9004A-52086-	2		
				#	(90045-20278-)	1		
1901 -	F65#..5F		T=2.06		9004A-52079-	2		
				#	(90045-20271-)	1		
1901 -	F65#..5F		T=2.02		9004A-52080-	2		
				#	(90045-20272-)	1		
1901 -	F65#..5F		T=1.98		9004A-52081-	2		
				#	(90045-20273-)	1		
1901 -	F65#..5F		T=1.94		9004A-52082-	2		
				#	(90045-20274-)	1		
1901 -	F65#..5F		T=1.90		9004A-52083-	2		
				#	(90045-20275-)	1		
1901 -	F65#..5F		T=1.86		9004A-52084-	2		
				#	(90045-20276-)	1		

FIG.33-05 TRANSMISSION GEAR (MTM)

PROD_DATE	MODELS	SPEC CODE	DESCRIPTION	R/P	PART NUMBER	QYT	REV_REF FR	REV_REF TO
	+----------+							
	| 33311B | RING, SHAFT SNAP (FOR FRONT BEARING)							
	CONTINUED--+							
1901 -	F65#..5F		T=1.82		9004A-52085-	2		
				#	(90045-20277-)	1		
1901 -	F65#..5F		T=1.78		9004A-52086-	2		
				#	(90045-20278-)	1		
	+----------+							
	| 33311D | BEARING, INPUT SHAFT							
	+----------+							
1111 - 1507	F65#..5F		NTN		9004A-36058-	1		
1507 - 1607	F650		NTN		9004A-36058-	1		
1507 - 1901	F653..5F		NTN		9004A-36058-	1		
1901 -	F653..5F		NTN		9004A-36058-	1		
1901 -	F654..5F				9004A-36103-	1		
				#	(90043-64142-)	1		
	+----------+							
	| 33321 | SHAFT, OUTPU							
	+----------+ T							
1111 - 1507	F650				33321-BZ010-	1		
1111 - 1507	F651..5F				33321-BZ020-	1		
1507 - 1607	F650				33321-BZ011-	1		
1507 - 1901	F653..5F				33321-BZ021-	1		
1901 -	F653..5F				33321-BZ021-	1		
1901 -	F654..5F				33321-BZ031-	1		
	+----------+							
	| 33321A | BEARING (FOR OUTPUT SHAFT REAR)							
	+----------+							
1111 - 1507	F65#..5F				9004A-36011-	1		
1507 - 1607	F650				9004A-36011-	1		
1507 - 1901	F653..5F				9004A-36011-	1		
1901 -	F653..5F				9004A-36011-	1		
1901 -	F654..5F				9004A-36051-	1		
				#	(90043-63311-)	1		

PROD_DATE	MODELS	SPEC CODE	DESCRIPTION	R/P	PART NUMBER	QYT	REV_REF FR	REV_REF TO
	+----------+							
	| 33321B | RING, SHAFT SNAP (FOR OUTPUT SHAFT BEARIN							
	+----------+ G)							
1111 - 1507	F65#..5F				9004A-52062-	1		
				#	(90045-21157-)	1		
1507 - 1607	F650				9004A-52062-	1		
				#	(90045-21157-)	1		
1507 - 1901	F653..5F				9004A-52062-	1		
				#	(90045-21157-)	1		
1901 -	F65#..5F				9004A-52062-	1		
				#	(90045-21157-)	1		
	+----------+							
	| 33321G | NUT (FOR MANUAL TRANSMISSION OUTPUT SHAFT REAR SET)							
	+----------+							
1111 - 1507	F65#..5F				9004A-17200-	1		
1507 - 1607	F650				9004A-17200-	1		
1507 - 1901	F653..5F				9004A-17200-	1		
1901 -	F653..5F				9004A-17200-	1		
1901 -	F654..5F				9004A-17201-	1		
				#	(90041-79327-)	1		
	+----------+							
	| 33321N | BEARING (FOR OUTPUT SHAFT FRONT)							
	+----------+							
1111 - 1507	F65#..5F				9004A-36050-	1		
				#	(90043-63247-)	1		
1507 - 1809	F65#..5F				9004A-36050-	1		
				#	(90043-63247-)	1		
1810 - 1901	F653..5F				9004A-36111-	1		
1901 -	F65#..5F				9004A-36111-	1		
	+----------+							
	| 33321V | BEARING (FOR OUTPUT SHAFT CENTER)							
	+----------+							
1111 - 1507	F65#..5F				9004A-36054-	1		
1507 - 1607	F650				9004A-36054-	1		
1507 - 1901	F653..5F				9004A-36054-	1		
1901 -	F653..5F				9004A-36054-	1		

FIG.33-05 TRANSMISSION GEAR (MTM)

PROD_DATE	MODELS	SPEC CODE	DESCRIPTION	R/P	PART NUMBER	QYT	REV_REF FR	REV_REF TO
	+----------+							
	| 33321V | BEARING (FOR OUTPUT SHAFT CENTER)							
	CONTINUED--+							
1901 -	F654..5F				9004A-36055-	1		
				#	(90043-63312-)	1		
	+----------+							
	| 33321X | RING, SHAFT SNAP (FOR OUTPUT SHAFT CENTER BEARING)							
	+----------+							
1111 - 1312	F65#..5F		T=2.06		9004A-52054-	1		
				#	(90045-20279-)	1		
1111 - 1312	F65#..5F		T=2.02		9004A-52055-	1		
				#	(90045-20280-)	1		
1111 - 1312	F65#..5F		T=1.98		9004A-52056-	1		
				#	(90045-20281-)	1		
1111 - 1312	F65#..5F		T=1.94		9004A-52057-	1		
				#	(90045-20282-)	1		
1111 - 1312	F65#..5F		T=1.90		9004A-52058-	1		
				#	(90045-20283-)	1		
1111 - 1312	F65#..5F		T=1.86		9004A-52059-	1		
				#	(90045-20284-)	1		
1111 - 1312	F65#..5F		T=1.82		9004A-52060-	1		
				#	(90045-20285-)	1		
1111 - 1312	F65#..5F		T=1.78		9004A-52061-	1		
				#	(90045-20286-)	1		
1401 - 1507	F65#..5F		T=2.06		9004A-52087-	1		
				#	(90045-20279-)	1		
1401 - 1507	F65#..5F		T=2.02		9004A-52088-	1		
				#	(90045-20280-)	1		
1401 - 1507	F65#..5F		T=1.98		9004A-52089-	1		
				#	(90045-20281-)	1		
1401 - 1507	F65#..5F		T=1.94		9004A-52090-	1		
				#	(90045-20282-)	1		
1401 - 1507	F65#..5F		T=1.90		9004A-52091-	1		
				#	(90045-20283-)	1		
1401 - 1507	F65#..5F		T=1.86		9004A-52092-	1		
				#	(90045-20284-)	1		
1401 - 1507	F65#..5F		T=1.82		9004A-52093-	1		
				#	(90045-20285-)	1		

PROD_DATE	MODELS	SPEC CODE	DESCRIPTION	R/P	PART NUMBER	QYT	REV_REF FR	REV_REF TO
	+----------+							
	| 33321X | RING, SHAFT SNAP (FOR OUTPUT SHAFT CENTER BEARING)							
	CONTINUED--+							
1401 - 1507	F65#..5F		T=1.78		9004A-52094-	1		
				#	(90045-20286-)	1		
1507 - 1607	F650		T=2.06		9004A-52087-	1		
				#	(90045-20279-)	1		
1507 - 1607	F650		T=2.02		9004A-52088-	1		
				#	(90045-20280-)	1		
1507 - 1607	F650		T=1.98		9004A-52089-	1		
				#	(90045-20281-)	1		
1507 - 1607	F650		T=1.94		9004A-52090-	1		
				#	(90045-20282-)	1		
1507 - 1607	F650		T=1.90		9004A-52091-	1		
				#	(90045-20283-)	1		
1507 - 1607	F650		T=1.86		9004A-52092-	1		
				#	(90045-20284-)	1		
1507 - 1607	F650		T=1.82		9004A-52093-	1		
				#	(90045-20285-)	1		
1507 - 1607	F650		T=1.78		9004A-52094-	1		
				#	(90045-20286-)	1		
1507 - 1901	F653..5F		T=2.06		9004A-52087-	1		
				#	(90045-20279-)	1		
1507 - 1901	F653..5F		T=2.02		9004A-52088-	1		
				#	(90045-20280-)	1		
1507 - 1901	F653..5F		T=1.98		9004A-52089-	1		
				#	(90045-20281-)	1		
1507 - 1901	F653..5F		T=1.94		9004A-52090-	1		
				#	(90045-20282-)	1		
1507 - 1901	F653..5F		T=1.90		9004A-52091-	1		
				#	(90045-20283-)	1		
1507 - 1901	F653..5F		T=1.86		9004A-52092-	1		
				#	(90045-20284-)	1		
1507 - 1901	F653..5F		T=1.82		9004A-52093-	1		
				#	(90045-20285-)	1		
1507 - 1901	F653..5F		T=1.78		9004A-52094-	1		
				#	(90045-20286-)	1		

FIG.33-05 TRANSMISSION GEAR (MTM)

PROD_DATE	MODELS	SPEC CODE	DESCRIPTION	R/P	PART NUMBER	QYT	REV_REF FR	REV_REF TO
	+----------+							
	| 33321X | RING, SHAFT SNAP (FOR OUTPUT SHAFT CENTER BEARING)							
	CONTINUED--+							
1901 -	F65#..5F		T=2.06		9004A-52087-	1		
				#	(90045-20279-)	1		
1901 -	F65#..5F		T=2.02		9004A-52088-	1		
				#	(90045-20280-)	1		
1901 -	F65#..5F		T=1.98		9004A-52089-	1		
				#	(90045-20281-)	1		
1901 -	F65#..5F		T=1.94		9004A-52090-	1		
				#	(90045-20282-)	1		
1901 -	F65#..5F		T=1.90		9004A-52091-	1		
				#	(90045-20283-)	1		
1901 -	F65#..5F		T=1.86		9004A-52092-	1		
				#	(90045-20284-)	1		
1901 -	F65#..5F		T=1.82		9004A-52093-	1		
				#	(90045-20285-)	1		
1901 -	F65#..5F		T=1.78		9004A-52094-	1		
				#	(90045-20286-)	1		
	+----------+							
	| 33323A | SPACER, SYNCHRONIZER RING							
	+----------+							
1111 - 1401	F65#..5F				33323-BZ010-	1		
				#	(33323-B0010-)	1		
1402 - 1507	F65#..5F				33323-BZ020-	1		
				#	(33323-B0010-)	1		
1507 - 1607	F650				33323-BZ020-	1		
				#	(33323-B0010-)	1		
1507 - 1901	F653..5F				33323-BZ020-	1		
				#	(33323-B0010-)	1		
1901 -	F65#..5F				33323-BZ020-	1		
				#	(33323-B0010-)	1		
	+----------+							
	| 33326 | PLATE, BEARING LOCK							
	+----------+							
1111 - 1306	F65#..5F				33326-BZ010-	1		
				#	(33326-87501-)	1		
1306 - 1507	F65#..5F				33326-BZ011-	1		
1507 - 1607	F650				33326-BZ011-	1		

PROD_DATE	MODELS	SPEC CODE	DESCRIPTION	R/P	PART NUMBER	QYT	REV_REF FR	REV_REF TO
	+----------+							
	| 33326 | PLATE, BEARING LOCK							
	CONTINUED--+							
1507 - 1901	F653..5F				33326-BZ011-	1		
1901 -	F65#..5F				33326-BZ011-	1		
	+----------+							
	| 33332 | GEAR, 2ND							
	+----------+							
1111 - 1507	F65#..5F				33332-BZ010-	1		
				#	(33332-87511-)	1		
1507 - 1607	F650				33332-BZ090-	1		
1507 - 1901	F653..5F				33332-BZ090-	1		
1901 -	F65#..5F				33332-BZ090-	1		
	+----------+							
	| 33332A | RING, SHAFT SNAP (FOR 2ND GEAR)							
	+----------+							
1111 - 1312	F65#..5F				9004A-52063-	2		
				#	(90045-20107-)	1		
1401 - 1507	F65#..5F		T=1.40		9004A-52095-	2		
				#	(90045-20107-)	1		
1507 - 1607	F650		T=1.40		9004A-52095-	2		
				#	(90045-20107-)	1		
1507 - 1901	F653..5F		T=1.40		9004A-52095-	2		
				#	(90045-20107-)	1		
1901 -	F65#..5F		T=1.40		9004A-52095-	2		
				#	(90045-20107-)	1		
	+----------+							
	| 33332B | BEARING, NEEDLE ROLLER (FOR 2ND GEAR)							
	+----------+							
1111 - 1507	F65#..5F		INA		9004A-36046-	1		
				#	(90043-64130-)	1		
1507 - 1607	F650		INA		9004A-36046-	1		
				#	(90043-64130-)	1		
1507 - 1901	F653..5F		INA		9004A-36046-	1		
				#	(90043-64130-)	1		
1507 - 1901	F653..5F		NTN		9004A-36057-	1		
				#	(90043-64119-)	1		
1901 -	F65#..5F		INA		9004A-36046-	1		
				#	(90043-64130-)	1		

FIG.33-05 TRANSMISSION GEAR (MTM)

PROD_DATE	MODELS	SPEC CODE	DESCRIPTION	R/P	PART NUMBER	QYT	REV_REF FR	REV_REF TO
	+----------+							
	| 33332B | BEARING, NEEDLE ROLLER (FOR 2ND GEAR)							
	CONTINUED--+							
1901 -	F65#..5F		NTN		9004A-36057-	1		
				#	(90043-64119-)	1		
	+----------+							
	| 33333 | GEAR, 3RD							
	+----------+							
1111 - 1507	F650				33333-BZ010-	1		
1111 - 1507	F651..5F				33333-BZ020-	1		
1507 - 1607	F650				33333-BZ010-	1		
1507 - 1901	F653..5F				33333-BZ020-	1		
1901 -	F654..5F				33305-BZ010-	1		
				#	(33305-B0020-)	1		
1901 -	F653..5F				33333-BZ020-	1		
	+----------+							
	| 33333A | BEARING, NEEDLE ROLLER (FOR 3RD GEAR)							
	+----------+							
1111 - 1507	F65#..5F				9004A-36052-	1		
1507 - 1607	F650				9004A-36052-	1		
1507 - 1901	F653..5F				9004A-36052-	1		
1901 -	F653..5F				9004A-36052-	1		
1901 -	F654..5F				9004A-36053-	1		
				#	(90043-64143-)	1		
	+----------+							
	| 33333B | RING, SHAFT SNAP (FOR 3RD REAR)							
	+----------+							
1111 - 1312	F65#..5F		T=2.06		9004A-52038-	1		
				#	(90045-20263-)	1		
1111 - 1312	F65#..5F		T=2.02		9004A-52039-	1		
				#	(90045-20264-)	1		
1111 - 1312	F65#..5F		T=1.98		9004A-52040-	1		
				#	(90045-20265-)	1		
1111 - 1312	F65#..5F		T=1.94		9004A-52041-	1		
				#	(90045-20266-)	1		
1111 - 1312	F65#..5F		T=1.90		9004A-52042-	1		
				#	(90045-20267-)	1		

PROD_DATE	MODELS	SPEC CODE	DESCRIPTION	R/P	PART NUMBER	QYT	REV_REF FR	REV_REF TO
	+----------+							
	| 33333B | RING, SHAFT SNAP (FOR 3RD REAR)							
	CONTINUED--+							
1111 - 1312	F65#..5F		T=1.86		9004A-52043-	1		
				#	(90045-20268-)	1		
1111 - 1312	F65#..5F		T=1.82		9004A-52044-	1		
				#	(90045-20269-)	1		
1111 - 1312	F65#..5F		T=2.10		9004A-52045-	1		
				#	(90045-20270-)	1		
1401 - 1507	F65#..5F		T=2.06		9004A-52071-	1		
				#	(90045-20263-)	1		
1401 - 1507	F65#..5F		T=2.02		9004A-52072-	1		
				#	(90045-20264-)	1		
1401 - 1507	F65#..5F		T=1.98		9004A-52073-	1		
				#	(90045-20265-)	1		
1401 - 1507	F65#..5F		T=1.94		9004A-52074-	1		
				#	(90045-20266-)	1		
1401 - 1507	F65#..5F		T=1.90		9004A-52075-	1		
				#	(90045-20267-)	1		
1401 - 1507	F65#..5F		T=1.86		9004A-52076-	1		
				#	(90045-20268-)	1		
1401 - 1507	F65#..5F		T=1.82		9004A-52077-	1		
				#	(90045-20269-)	1		
1401 - 1507	F65#..5F		T=2.10		9004A-52078-	1		
				#	(90045-20270-)	1		
1507 - 1607	F650		T=2.06		9004A-52071-	1		
				#	(90045-20263-)	1		
1507 - 1607	F650		T=2.02		9004A-52072-	1		
				#	(90045-20264-)	1		
1507 - 1607	F650		T=1.98		9004A-52073-	1		
				#	(90045-20265-)	1		
1507 - 1607	F650		T=1.94		9004A-52074-	1		
				#	(90045-20266-)	1		
1507 - 1607	F650		T=1.90		9004A-52075-	1		
				#	(90045-20267-)	1		
1507 - 1607	F650		T=1.86		9004A-52076-	1		
				#	(90045-20268-)	1		

FIG.33-05 TRANSMISSION GEAR (MTM)

PROD_DATE	MODELS	SPEC CODE	DESCRIPTION	R/P	PART NUMBER	QYT	REV_REF FR	REV_REF TO
	+----------+							
	| 33333B | RING, SHAFT SNAP (FOR 3RD REAR)							
	CONTINUED--+							
1507 - 1607	F650		T=1.82		9004A-52077-	1		
				#	(90045-20269-)	1		
1507 - 1607	F650		T=2.10		9004A-52078-	1		
				#	(90045-20270-)	1		
1507 - 1901	F653..5F		T=2.06		9004A-52071-	1		
				#	(90045-20263-)	1		
1507 - 1901	F653..5F		T=2.02		9004A-52072-	1		
				#	(90045-20264-)	1		
1507 - 1901	F653..5F		T=1.98		9004A-52073-	1		
				#	(90045-20265-)	1		
1507 - 1901	F653..5F		T=1.94		9004A-52074-	1		
				#	(90045-20266-)	1		
1507 - 1901	F653..5F		T=1.90		9004A-52075-	1		
				#	(90045-20267-)	1		
1507 - 1901	F653..5F		T=1.86		9004A-52076-	1		
				#	(90045-20268-)	1		
1507 - 1901	F653..5F		T=1.82		9004A-52077-	1		
				#	(90045-20269-)	1		
1507 - 1901	F653..5F		T=2.10		9004A-52078-	1		
				#	(90045-20270-)	1		
1901 -	F65#..5F		T=2.06		9004A-52071-	1		
				#	(90045-20263-)	1		
1901 -	F65#..5F		T=2.02		9004A-52072-	1		
				#	(90045-20264-)	1		
1901 -	F65#..5F		T=1.98		9004A-52073-	1		
				#	(90045-20265-)	1		
1901 -	F65#..5F		T=1.94		9004A-52074-	1		
				#	(90045-20266-)	1		
1901 -	F65#..5F		T=1.90		9004A-52075-	1		
				#	(90045-20267-)	1		
1901 -	F65#..5F		T=1.86		9004A-52076-	1		
				#	(90045-20268-)	1		
1901 -	F65#..5F		T=1.82		9004A-52077-	1		
				#	(90045-20269-)	1		

PROD_DATE	MODELS	SPEC CODE	DESCRIPTION	R/P	PART NUMBER	QYT	REV_REF FR	REV_REF TO
	+----------+							
	| 33333B | RING, SHAFT SNAP (FOR 3RD REAR)							
	CONTINUED--+							
1901 -	F65#..5F		T=2.10		9004A-52078-	1		
				#	(90045-20270-)	1		
	+----------+							
	| 33335 | GEAR, 1ST							
	+----------+							
1111 - 1507	F650				33335-BZ010-	1		
1111 - 1507	F651..5F				33335-BZ020-	1		
				#	(33335-97501-)	1		
1507 - 1607	F650				33335-BZ010-	1		
1507 - 1901	F653..5F				33335-BZ020-	1		
				#	(33335-97501-)	1		
1901 -	F65#..5F				33335-BZ020-	1		
				#	(33335-97501-)	1		
	+----------+							
	| 33335C | BEARING, NEEDLE ROLLER(FOR 1ST GEAR)							
	+----------+							
1111 - 1507	F65#..5F				9004A-36056-	1		
				#	(90043-64034-)	1		
1507 - 1607	F650				9004A-36056-	1		
				#	(90043-64034-)	1		
1507 - 1901	F653..5F				9004A-36056-	1		
				#	(90043-64034-)	1		
1901 -	F65#..5F				9004A-36056-	1		
				#	(90043-64034-)	1		
	+----------+							
	| 33336 | GEAR, 5TH							
	+----------+							
1111 - 1507	F65#..5F				33336-BZ010-	1		
				#	(33336-87504-)	1		
1507 - 1607	F650				33336-BZ010-	1		
				#	(33336-87504-)	1		
1507 - 1901	F653..5F				33336-BZ010-	1		
				#	(33336-87504-)	1		
1901 -	F65#..5F				33336-BZ010-	1		
				#	(33336-87504-)	1		

FIG.33-05 TRANSMISSION GEAR (MTM)

PROD_DATE	MODELS	SPEC CODE	DESCRIPTION	R/P	PART NUMBER	QYT	REV_REF FR	REV_REF TO
	+----------+							
	| 33348 | WASHER, 1ST GEAR THRUST							
	+----------+							
1111 - 1507	F65#..5F				33348-BZ010-	1		
				#	(33348-87508-)	1		
1507 - 1607	F650				33348-BZ010-	1		
				#	(33348-87508-)	1		
1507 - 1901	F653..5F				33348-BZ010-	1		
				#	(33348-87508-)	1		
1901 -	F65#..5F				33348-BZ010-	1		
				#	(33348-87508-)	1		
	+----------+							
	| 33356 | SPRING, WAVE							
	+----------+							
1111 - 1507	F65#..5F				33356-BZ010-	1		
				#	(33356-87501-)	1		
1507 - 1607	F650				33356-BZ010-	1		
				#	(33356-87501-)	1		
1507 - 1901	F653..5F				33356-BZ010-	1		
				#	(33356-87501-)	1		
1901 -	F65#..5F				33356-BZ010-	1		
				#	(33356-87501-)	1		
	+----------+							
	| 33360 | HUB ASSY, SYNCHRONIZER, NO.1							
	+----------+							
1111 - 1507	F65#..5F				33360-BZ030-	1		
1507 - 1607	F650				33360-BZ170-	1		
1507 - 1901	F653..5F				33360-BZ170-	1		
1901 -	F653..5F				33360-BZ170-	1		
1901 -	F654..5F				33360-BZ200-	1		
	+----------+							
	| 33365 | KEY, SYNCHROMESH SHIFTING, NO.1							
	+----------+							
1111 - 1401	F65#..5F				33365-BZ010-	6		
				#	(33365-87702-)	1		
1402 - 1507	F65#..5F				33365-BZ030-	6		
				#	(33365-87702-)	1		
1507 - 1607	F650				33365-BZ030-	6		
				#	(33365-87702-)	1		

PROD_DATE	MODELS	SPEC CODE	DESCRIPTION	R/P	PART NUMBER	QYT	REV_REF FR	REV_REF TO
	+----------+							
	| 33365 | KEY, SYNCHROMESH SHIFTING, NO.1							
	CONTINUED--+							
1507 - 1901	F653..5F				33365-BZ030-	6		
				#	(33365-87702-)	1		
1901 -	F65#..5F				33365-BZ030-	6		
				#	(33365-87702-)	1		
	+----------+							
	| 33366 | KEY, SYNCHROMESH SHIFTING, NO.2							
	+----------+							
1111 - 1312	F65#..5F				33366-BZ010-	3		
				#	(33366-87505-)	1		
1401 - 1507	F65#..5F				33366-BZ030-	3		
				#	(33366-87505-)	1		
1507 - 1607	F650				33366-BZ030-	3		
				#	(33366-87505-)	1		
1507 - 1901	F653..5F				33366-BZ030-	3		
				#	(33366-87505-)	1		
1901 -	F65#..5F				33366-BZ030-	3		
				#	(33366-87505-)	1		
	+----------+							
	| 33367 | RING, SYNCHRONIZER, NO.1							
	+----------+							
1111 - 1401	F65#..5F				33367-BZ010-	3		
				#	(33367-87507-)	1		
1402 - 1507	F65#..5F				33367-BZ050-	3		
				#	(33367-87507-)	1		
1507 - 1607	F650				33367-BZ050-	3		
				#	(33367-87507-)	1		
1507 - 1901	F653..5F				33367-BZ050-	3		
				#	(33367-87507-)	1		
1901 -	F65#..5F				33367-BZ050-	3		
				#	(33367-87507-)	1		
	+----------+							
	| 33368 | RING, SYNCHRONIZER, NO.2							
	+----------+							
1111 - 1312	F65#..5F				33368-BZ010-	1		
				#	(33368-87509-)	1		
1401 - 1507	F65#..5F				33368-BZ080-	1		
				#	(33368-87509-)	1		

FIG.33-05 TRANSMISSION GEAR (MTM)

PROD_DATE	MODELS	SPEC CODE	DESCRIPTION	R/P	PART NUMBER	QYT	REV_REF FR	REV_REF TO
	+----------+							
	| 33368 | RING, SYNCHRONIZER, NO.2							
	CONTINUED--+							
1507 - 1607	F650				33368-BZ080-	1		
				#	(33368-87509-)	1		
1507 - 1901	F653..5F				33368-BZ080-	1		
				#	(33368-87509-)	1		
1901 -	F65#..5F				33368-BZ080-	1		
				#	(33368-87509-)	1		
	+----------+							
	| 33369 | RING, SYNCHRONIZER, NO.3							
	+----------+							
1111 - 1312	F65#..5F				33369-BZ010-	1		
				#	(33369-87703-)	1		
1401 - 1507	F65#..5F				33369-BZ050-	1		
				#	(33369-87703-)	1		
	+----------+							
	| 33369B | RING, SYNCHRONIZER, NO.4							
	+----------+							
1111 - 1312	F65#..5F				33381-BZ010-	1		
				#	(33381-B0010-)	1		
1401 - 1507	F65#..5F				33381-BZ020-	1		
1507 - 1607	F650				33381-BZ020-	1		
1507 - 1901	F653..5F				33381-BZ020-	1		
1901 -	F65#..5F				33381-BZ020-	1		
	+----------+							
	| 33370 | HUB ASSY, SYNCHRONIZER, NO.2							
	+----------+							
1111 - 1210	F65#..5F				33370-BZ020-	1		
				#	(33370-B5020-)	1		
1211 - 1507	F65#..5F				33370-BZ100-	1		
				#	(33370-B5020-)	1		
1507 - 1607	F650				33370-BZ100-	1		
				#	(33370-B5020-)	1		
1507 - 1901	F653..5F				33370-BZ100-	1		
				#	(33370-B5020-)	1		
1901 -	F65#..5F				33370-BZ100-	1		
				#	(33370-B5020-)	1		

PROD_DATE	MODELS	SPEC CODE	DESCRIPTION	R/P	PART NUMBER	QYT	REV_REF FR	REV_REF TO
	+----------+							
	| 33371 | SPRING, SYNCHROMESH SHIFTING KEY, NO.1							
	+----------+							
1111 - 1507	F65#..5F				33371-BZ010-	4		
				#	(33371-87505-)	1		
1507 - 1607	F650				33371-BZ010-	4		
				#	(33371-87505-)	1		
1507 - 1901	F653..5F				33371-BZ010-	4		
				#	(33371-87505-)	1		
1901 -	F65#..5F				33371-BZ010-	4		
				#	(33371-87505-)	1		
	+----------+							
	| 33380 | HUB ASSY, SYNCHRONIZER, NO.3							
	+----------+							
1111 - 1210	F65#..5F				33380-BZ020-	1		
				#	(33380-B5020-)	1		
1211 - 1507	F65#..5F				33380-BZ100-	1		
				#	(33380-B5020-)	1		
1507 - 1607	F650				33380-BZ100-	1		
				#	(33380-B5020-)	1		
1507 - 1901	F653..5F				33380-BZ100-	1		
				#	(33380-B5020-)	1		
1901 -	F65#..5F				33380-BZ100-	1		
				#	(33380-B5020-)	1		
	+----------+							
	| 33386A | SUB-GEAR, 1S							
	+----------+ T							
1111 - 1312	F65#..5F				33386-BZ010-	1		
				#	(33386-87503-)	1		
1401 - 1507	F65#..5F				33386-BZ040-	1		
				#	(33386-87503-)	1		
1507 - 1607	F650				33386-BZ040-	1		
				#	(33386-87503-)	1		
1507 - 1901	F653..5F				33386-BZ040-	1		
				#	(33386-87503-)	1		
1901 -	F65#..5F				33386-BZ040-	1		
				#	(33386-87503-)	1		

FIG.33-05 TRANSMISSION GEAR (MTM)

PROD_DATE	MODELS	SPEC CODE	DESCRIPTION	R/P	PART NUMBER	QYT	REV_REF FR	REV_REF TO
	+----------+							
	| 33387 | SUB-GEAR, NO							
	+----------+ .2							
1111 - 1312	F65#..5F				33387-BZ010-	1		
				#	(33387-87503-)	1		
1401 - 1507	F65#..5F				33387-BZ040-	1		
				#	(33387-87503-)	1		
1507 - 1607	F650				33387-BZ040-	1		
				#	(33387-87503-)	1		
1507 - 1901	F653..5F				33387-BZ040-	1		
				#	(33387-87503-)	1		
1901 -	F65#..5F				33387-BZ040-	1		
				#	(33387-87503-)	1		
	+----------+							
	| 33391 | SPRING, SYNCHROMESH SHIFTING KEY, NO.2							
	+----------+							
1111 - 1312	F65#..5F				33391-BZ010-	2		
				#	(33391-87701-)	1		
1401 - 1507	F65#..5F				33391-BZ050-	2		
				#	(33391-87701-)	1		
1507 - 1607	F650				33391-BZ050-	2		
				#	(33391-87701-)	1		
1507 - 1901	F653..5F				33391-BZ050-	2		
				#	(33391-87701-)	1		
1901 -	F65#..5F				33391-BZ050-	2		
				#	(33391-87701-)	1		
	+----------+							
	| 33402 | GEAR SUB-ASSY, REVERSE IDLER							
	+----------+							
1111 - 1507	F65#..5F				33402-BZ010-	1		
1507 - 1607	F650				33402-BZ010-	1		
1507 - 1901	F653..5F				33402-BZ010-	1		
1901 -	F653..5F				33402-BZ010-	1		
1901 -	F654..5F				33402-BZ030-	1		
				#	(33402-B4011-)	1		
	+----------+							
	| 33421 | GEAR, COUNTE							
	+----------+ R							
1111 - 1507	F650				33421-BZ010-	1		

PROD_DATE	MODELS	SPEC CODE	DESCRIPTION	R/P	PART NUMBER	QYT	REV_REF FR	REV_REF TO
	+----------+							
	| 33421 | GEAR, COUNTE							
	CONTINUED--+ R							
1111 - 1507	F651..5F				33421-BZ020-	1		
1507 - 1607	F650				33421-BZ010-	1		
1507 - 1901	F653..5F				33421-BZ020-	1		
1901 -	F653..5F				33421-BZ020-	1		
1901 -	F654..5F				33421-BZ030-	1		
				#	(33421-B4010-)	1		
	+----------+							
	| 33421G | BEARING, RADIAL BALL(FOR COUNTER GEAR REA							
	+----------+ R)							
1111 - 1507	F65#..5F				9004A-36048-	1		
				#	(90043-63313-)	1		
1507 - 1809	F65#..5F				9004A-36048-	1		
				#	(90043-63313-)	1		
1810 - 1901	F653..5F				9004A-36110-	1		
1901 -	F65#..5F				9004A-36110-	1		
	+----------+							
	| 33451 | SHAFT, REVERSE IDLER GEAR							
	+----------+							
1111 - 1507	F65#..5F				33451-BZ050-	1		
				#	(33451-87504-)	1		
1507 - 1607	F650				33451-BZ050-	1		
				#	(33451-87504-)	1		
1507 - 1901	F653..5F				33451-BZ050-	1		
				#	(33451-87504-)	1		
1901 -	F65#..5F				33451-BZ050-	1		
				#	(33451-87504-)	1		
	+----------+							
	| 33462 | WASHER, REVERSE IDLER THRUST							
	+----------+							
1111 - 1507	F65#..5F				33462-BZ020-	1		
				#	(33462-87501-)	1		
1507 - 1607	F650				33462-BZ020-	1		
				#	(33462-87501-)	1		
1507 - 1901	F653..5F				33462-BZ020-	1		
				#	(33462-87501-)	1		

FIG.33-05 TRANSMISSION GEAR (MTM)

PROD_DATE	MODELS	SPEC CODE	DESCRIPTION	R/P	PART NUMBER	QYT	REV_REF FR	REV_REF TO
	+----------+							
	| 33462 | WASHER, REVERSE IDLER THRUST							
	CONTINUED--+							
1901 -	F65#..5F				33462-BZ020-	1		
				#	(33462-87501-)	1		
	+----------+							
	| 33481 | GEAR, SPEEDOMETER DRIVE (MTM)							
	+----------+							
1111 - 1507	F651..5F		N=6		33481-BZ070-	1		
1111 - 1507	F650		N=5		33481-BZ080-	1		
	+----------+							
	| 33489 | ROTOR, SPEED SENSOR							
	+----------+							
1507 - 1607	F650				35736-BZ020-	1		
1507 - 1901	F653..5F				35736-BZ020-	1		
1901 -	F653..5F				35736-BZ020-	1		
1901 -	F654..5F				35736-BZ021-	1		

FIG.33-07 GEAR SHIFT FORK & LEVER SHAFT (MTM)

(1111-1507)5F

M5S-B9, M5S-C9

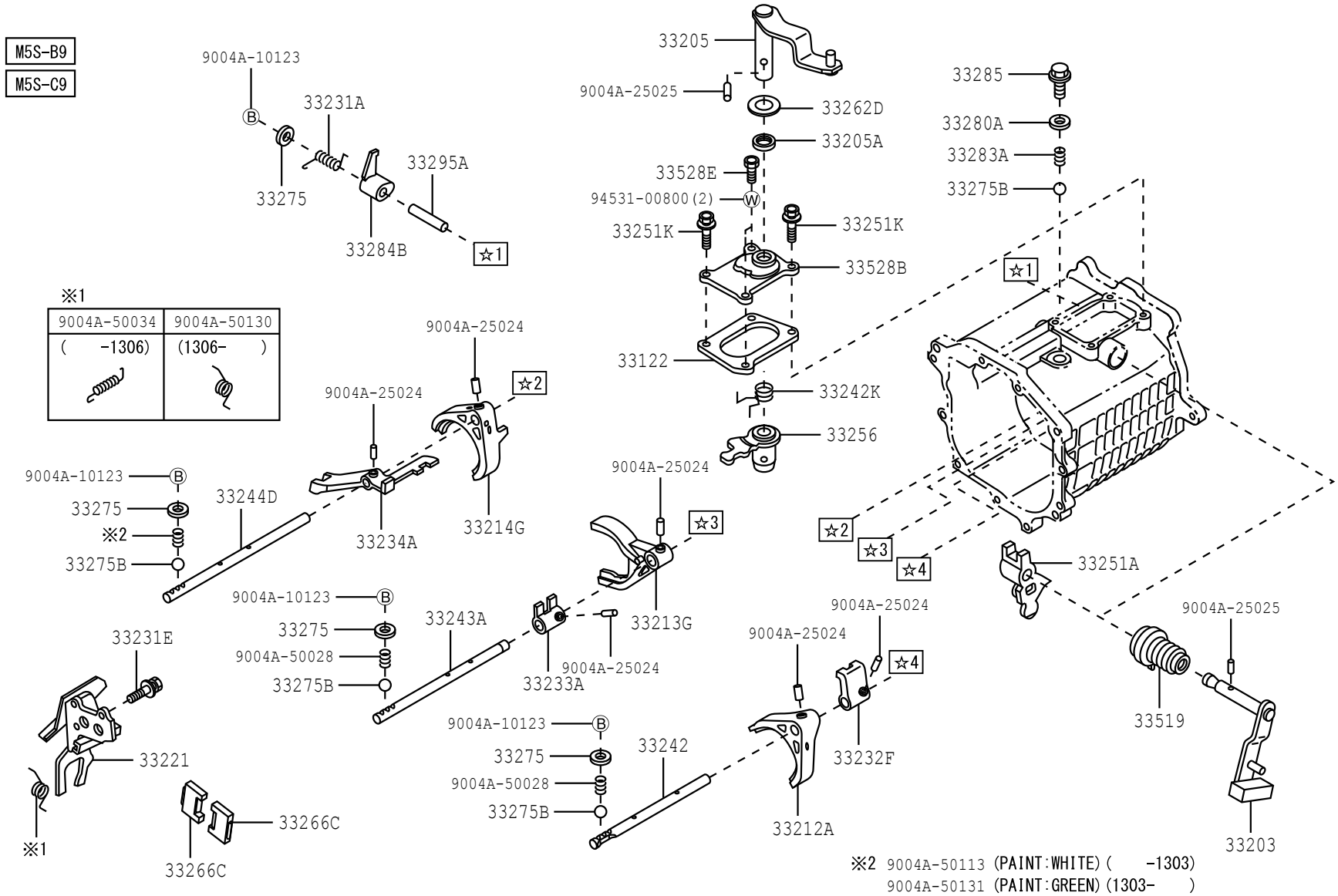

※2 9004A-50113 (PAINT:WHITE)(-1303)
9004A-50131 (PAINT:GREEN)(1303-)

3307

334478-B

FIG.33-07 GEAR SHIFT FORK & LEVER SHAFT (MTM)

(1507-)5F

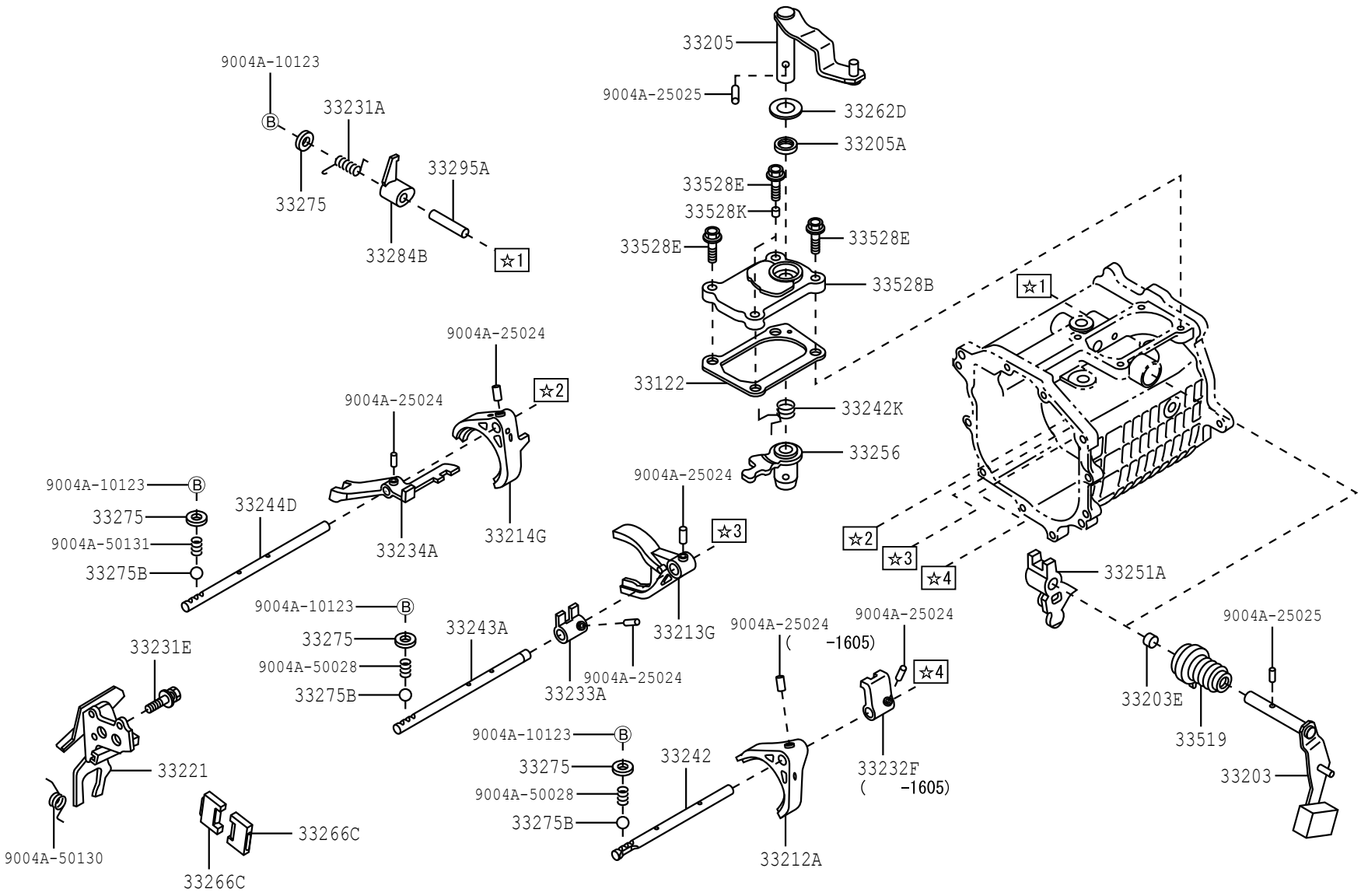

PROD_DATE	MODELS	SPEC CODE	DESCRIPTION	R/P	PART NUMBER	QYT	REV_REF FR	REV_REF TO
	+----------+							
	| 33122 | GASKET, MANUAL TRANSMISSION CASE COVER							
	+----------+							
1111 - 1507	F65#..5F				33122-BZ020-	1		
				#	(33122-87504-)	1		
1507 - 1607	F650				33122-BZ060-	1		
1507 - 1901	F653..5F				33122-BZ060-	1		
1901 -	F65#..5F				33122-BZ060-	1		
	+----------+							
	| 33203 | SHAFT SUB-ASSY, SHIFT LEVER, NO.1							
	+----------+							
1111 - 1507	F65#..5F				33203-BZ080-	1		
1507 - 1607	F650				33203-BZ100-	1		
1507 - 1901	F653..5F				33203-BZ100-	1		
1901 -	F65#..5F				33203-BZ100-	1		
	+----------+							
	| 33203E | BUSH(FOR SHIFT LEVER SHAFT)							
	+----------+							
1507 - 1607	F650				33518-BZ010-	1		
1507 - 1712	F653..5F				33518-BZ010-	1		
1801 - 1901	F653..5F				33518-BZ020-	1		
1901 -	F65#..5F				33518-BZ020-	1		
	+----------+							
	| 33205 | SHAFT SUB-ASSY, SELECT LEVER							
	+----------+							
1111 - 1507	F65#..5F				33205-BZ060-	1		
				#	(33205-B0010-)	1		
1507 - 1607	F650				33205-BZ080-	1		
1507 - 1901	F653..5F				33205-BZ080-	1		
1901 -	F65#..5F				33205-BZ080-	1		
	+----------+							
	| 33205A | SEAL, OIL(FOR SHIFT LEVER NO.2 SHAFT)							
	+----------+							
1111 - 1507	F65#..5F				9004A-31017-	1		
1507 - 1607	F650				9004A-31017-	1		
1507 - 1901	F653..5F				9004A-31017-	1		

FIG.33-07 GEAR SHIFT FORK & LEVER SHAFT (MTM)

PROD_DATE	MODELS	SPEC CODE	DESCRIPTION	R/P	PART NUMBER	QYT	REV_REF FR	REV_REF TO
	+----------+							
	| 33205A | SEAL, OIL(FOR SHIFT LEVER NO.2 SHAFT)							
	CONTINUED--+							
1901 -	F65#..5F				9004A-31017-	1		
	+----------+							
	| 33212A | FORK, GEAR SHIFT, NO.1							
	+----------+							
1111 - 1507	F65#..5F				33212-BZ040-	1		
1507 - 1607	F650				33212-BZ060-	1		
1507 - 1901	F653..5F				33212-BZ060-	1		
1901 -	F65#..5F				33212-BZ060-	1		
	+----------+							
	| 33213G | FORK, GEAR SHIFT, NO.2							
	+----------+							
1111 - 1507	F65#..5F				33213-BZ090-	1		
1507 - 1607	F650				33213-BZ090-	1		
1507 - 1901	F653..5F				33213-BZ090-	1		
1901 -	F65#..5F				33213-BZ090-	1		
	+----------+							
	| 33214G | FORK, GEAR SHIFT, NO.3							
	+----------+							
1111 - 1507	F65#..5F				33214-BZ050-	1		
1507 - 1607	F650				33214-BZ070-	1		
1507 - 1901	F653..5F				33214-BZ070-	1		
1901 -	F65#..5F				33214-BZ070-	1		
	+----------+							
	| 33221 | ARM, REVERSE SHIFT							
	+----------+							
1111 - 1306	F65#..5F				33201-BZ010-	1		
				#	(33201-B0010-)	1		
1306 - 1507	F65#..5F				33201-BZ011-	1		
1507 - 1607	F650				33201-BZ011-	1		
1507 - 1901	F653..5F				33201-BZ011-	1		
1901 -	F65#..5F				33201-BZ011-	1		

PROD_DATE	MODELS	SPEC CODE	DESCRIPTION	R/P	PART NUMBER	QYT	REV_REF FR	REV_REF TO
	33231A SPRING, REVERSE SHIFT RESTRICT							
1111 - 1507	F65#..5F		L=22.3		9004A-50033-	1		
1507 - 1607	F650		L=22.3		9004A-50033-	1		
1507 - 1901	F653..5F		L=22.3		9004A-50033-	1		
1901 -	F65#..5F		L=22.3		9004A-50033-	1		
	33231E BOLT(FOR REVERSE SHIFT HEAD)							
1111 - 1507	F65#..5F				9004A-11228-	3		
				#	(91611-G0820-)	1		
1507 - 1607	F650				9004A-11228-	3		
				#	(91611-G0820-)	1		
1507 - 1901	F653..5F				9004A-11228-	3		
				#	(91611-G0820-)	1		
1901 -	F65#..5F				9004A-11228-	3		
				#	(91611-G0820-)	1		
	33232F HEAD, GEAR SHIFT, NO.1							
1111 - 1507	F65#..5F				33232-BZ010-	1		
				#	(33233-97501-)	1		
1507 - 1605	F65#..5F				33232-BZ010-	1		
				#	(33233-97501-)	1		
	33233A HEAD, GEAR SHIFT, NO.2							
1111 - 1507	F65#..5F				33233-BZ010-	1		
				#	(33234-97501-)	1		
1507 - 1607	F650				33233-BZ010-	1		
				#	(33234-97501-)	1		
1507 - 1901	F653..5F				33233-BZ010-	1		
				#	(33234-97501-)	1		
1901 -	F65#..5F				33233-BZ010-	1		
				#	(33234-97501-)	1		

FIG.33-07 GEAR SHIFT FORK & LEVER SHAFT (MTM)

PROD_DATE	MODELS	SPEC CODE	DESCRIPTION	R/P	PART NUMBER	QYT	REV_REF FR	REV_REF TO
	33234A HEAD, GEAR SHIFT, NO.3							
1111 - 1507	F65#..5F				33234-BZ010-	1		
				#	(33237-87501-)	1		
1507 - 1607	F650				33234-BZ010-	1		
				#	(33237-87501-)	1		
1507 - 1901	F653..5F				33234-BZ010-	1		
				#	(33237-87501-)	1		
1901 -	F65#..5F				33234-BZ010-	1		
				#	(33237-87501-)	1		
	33242 SHAFT, GEAR SHIFT FORK, NO.1							
1111 - 1507	F65#..5F				33242-BZ010-	1		
				#	(33242-BZ050-)	1		
1507 - 1601	F650		#		33242-BZ010-	1		
				#	(33242-BZ050-)	1		
1507 - 1604	F653..5F				33242-BZ010-	1		
				#	(33242-BZ050-)	1		
1602 - 1607	F650		#		33242-BZ050-	1		
1605 - 1607	F650				33242-BZ050-	1		
1605 - 1901	F653..5F				33242-BZ050-	1		
1901 -	F65#..5F		#		33242-BZ050-	1		
	33242K SPRING, TORSION(FOR SELECT RETURN)							
1111 - 1507	F65#..5F				9004A-50032-	1		
1507 - 1607	F650				9004A-50032-	1		
1507 - 1901	F653..5F				9004A-50032-	1		
1901 -	F65#..5F				9004A-50032-	1		
	33243A SHAFT, GEAR SHIFT FORK, NO.2							
1111 - 1507	F65#..5F				33243-BZ010-	1		
1507 - 1607	F650				33243-BZ010-	1		
1507 - 1708	F653..5F				33243-BZ010-	1		

PROD_DATE	MODELS	SPEC CODE	DESCRIPTION	R/P	PART NUMBER	QYT	REV_REF FR	REV_REF TO
	+----------+							
	| 33243A | SHAFT, GEAR SHIFT FORK, NO.2							
	CONTINUED--+							
1709 - 1901	F653..5F				33243-BZ080-	1		
1901 -	F653..5F				33243-BZ080-	1		
1901 -	F654..5F				33243-BZ090-	1		
				#	(33245-B4010-)	1		
	+----------+							
	| 33244D | SHAFT, GEAR SHIFT FORK, NO.3							
	+----------+							
1111 - 1303	F65#..5F				33244-BZ040-	1		
1303 - 1507	F65#..5F				33244-BZ010-	1		
				#	(33244-97501-)	1		
1507 - 1607	F650				33244-BZ010-	1		
				#	(33244-97501-)	1		
1507 - 1708	F653..5F				33244-BZ010-	1		
				#	(33244-97501-)	1		
1709 - 1901	F653..5F				33244-BZ070-	1		
				#	(33244-97501-)	1		
1901 -	F65#..5F				33244-BZ070-	1		
				#	(33244-97501-)	1		
	+----------+							
	| 33251A | LEVER, SHIFT, INNER NO.1							
	+----------+							
1111 - 1401	F65#..5F				33251-BZ050-	1		
				#	(33251-87509-)	1		
1401 - 1507	F65#..5F				33251-BZ060-	1		
				#	(33251-87509-)	1		
1507 - 1607	F650				33251-BZ060-	1		
				#	(33251-87509-)	1		
1507 - 1901	F653..5F				33251-BZ060-	1		
				#	(33251-87509-)	1		
1901 -	F65#..5F				33251-BZ060-	1		
				#	(33251-87509-)	1		
	+----------+							
	| 33251K | BOLT, WASHER BASED HEAD HEXAGON							
	+----------+							
1111 - 1507	F65#..5F				9004A-11230-	2		
				#	(91611-60828-000)	1		

FIG.33-07 GEAR SHIFT FORK & LEVER SHAFT (MTM)

PROD_DATE	MODELS	SPEC CODE	DESCRIPTION	R/P	PART NUMBER	QYT	REV_REF FR	REV_REF TO
	+----------+							
	| 33256 | LEVER, SELECT INNER							
	+----------+							
1111 - 1401	F65#..5F				33256-BZ040-	1		
				#	(33256-B5010-)	1		
1401 - 1507	F65#..5F				33256-BZ050-	1		
				#	(33256-B5010-)	1		
1507 - 1607	F650				33256-BZ050-	1		
				#	(33256-B5010-)	1		
1507 - 1901	F653..5F				33256-BZ050-	1		
				#	(33256-B5010-)	1		
1901 -	F65#..5F				33256-BZ050-	1		
				#	(33256-B5010-)	1		
	+----------+							
	| 33262D | WASHER, PLATE (FOR SELECT LEVER SHAFT)							
	+----------+							
1111 - 1507	F65#..5F				9004A-20015-	1		
1507 - 1607	F650				9004A-20015-	1		
1507 - 1901	F653..5F				9004A-20015-	1		
1901 -	F65#..5F				9004A-20015-	1		
	+----------+							
	| 33266C | PLATE, SHIFT INTER LOCK							
	+----------+							
1111 - 1401	F65#..5F				33266-BZ040-	2		
				#	(33266-87506-)	1		
1401 - 1507	F65#..5F				33266-BZ050-	2		
				#	(33266-87506-)	1		
1507 - 1607	F650				33266-BZ050-	2		
				#	(33266-87506-)	1		
1507 - 1901	F653..5F				33266-BZ050-	2		
				#	(33266-87506-)	1		
1901 -	F65#..5F				33266-BZ050-	2		
				#	(33266-87506-)	1		
	+----------+							
	| 33275 | SEAT, SHIFT DETENT BALL SPRING, NO.1							
	+----------+							
1111 - 1507	F65#..5F		OD=17		9004A-43005-	4		
1507 - 1607	F650		OD=17		9004A-43005-	4		

PROD_DATE	MODELS	SPEC CODE	DESCRIPTION	R/P	PART NUMBER	QYT	REV_REF FR	REV_REF TO
	+----------+							
	| 33275 | SEAT, SHIFT DETENT BALL SPRING, NO.1							
	CONTINUED--+							
1507 - 1901	F653..5F		OD=17		9004A-43005-	4		
1901 -	F65#..5F		OD=17		9004A-43005-	4		
	+----------+							
	| 33275B | BALL, SHAFT DETENT							
	+----------+							
1111 - 1303	F65#..5F				9004A-36044-	4		
				#	(90043-60003-)	1		
1303 - 1507	F65#..5F				9004A-36044-	3		
				#	(90043-60003-)	1		
1507 - 1607	F650				9004A-36044-	3		
				#	(90043-60003-)	1		
1507 - 1901	F653..5F				9004A-36044-	3		
				#	(90043-60003-)	1		
1901 -	F65#..5F				9004A-36044-	3		
				#	(90043-60003-)	1		
	+----------+							
	| 33280A | GASKET, REVERSE RESTRICT PIN							
	+----------+							
1111 - 1507	F65#..5F				9004A-43004-	1		
	+----------+							
	| 33283A | SPRING, COMPRESSION (FOR REVERSE RESTRICT PIN)							
	+----------+							
1111 - 1303	F65#..5F				9004A-50125-	1		
	+----------+							
	| 33284B | PIN, REVERSE RESTRICT, NO.2							
	+----------+							
1111 - 1507	F65#..5F				33284-BZ010-	1		
1507 - 1607	F650				33284-BZ010-	1		
1507 - 1901	F653..5F				33284-BZ010-	1		
1901 -	F65#..5F				33284-BZ010-	1		
	+----------+							
	| 33285 | HOLDER, REVERSE RESTRICT PIN							
	+----------+							
1111 - 1507	F65#..5F				33285-BZ020-	1		
				#	(33285-87501-)	1		

FIG.33-07 GEAR SHIFT FORK & LEVER SHAFT (MTM)

PROD_DATE	MODELS	SPEC CODE	DESCRIPTION	R/P	PART NUMBER	QYT	REV_REF FR	REV_REF TO
	+----------+							
	| 33295A | SHAFT, REVERSE RESTRICT							
	+----------+							
1111 - 1507	F65#..5F				33283-BZ050-	1		
				#	(33295-87501-)	1		
1507 - 1607	F650				33283-BZ050-	1		
				#	(33295-87501-)	1		
1507 - 1901	F653..5F				33283-BZ050-	1		
				#	(33295-87501-)	1		
1901 -	F65#..5F				33283-BZ050-	1		
				#	(33295-87501-)	1		
	+----------+							
	| 33519 | BOOT, CONTROL SHAFT DUST							
	+----------+							
1111 - 1507	F65#..5F				33519-BZ010-	1		
1507 - 1607	F650				33519-BZ010-	1		
1507 - 1901	F653..5F				33519-BZ010-	1		
1901 -	F65#..5F				33519-BZ010-	1		
	+----------+							
	| 33528B | COVER, CONTROL SHAFT							
	+----------+							
1111 - 1507	F65#..5F				33528-87Z01-	1		
				#	(33528-87503-)	1		
1507 - 1607	F650				33528-BZ050-	1		
1507 - 1901	F653..5F				33528-BZ050-	1		
1901 -	F65#..5F				33528-BZ050-	1		
	+----------+							
	| 33528E | BOLT (FOR CONTROL SHAFT COVER)							
	+----------+							
1111 - 1507	F65#..5F				9004A-10122-	2		
				#	(90041-01421-)	1		
1507 - 1607	F650				9004A-10190-	4		
1507 - 1901	F653..5F				9004A-10190-	4		
1901 -	F65#..5F				9004A-10190-	4		
	+----------+							
	| 33528K | PIN, RING (FOR CONTROL SHAFT COVER SET BOLT)							
	+----------+							
1507 - 1607	F650				9004A-25029-	2		

FIG.33-07 GEAR SHIFT FORK & LEVER SHAFT (MTM)

PROD_DATE	MODELS	SPEC CODE	DESCRIPTION	R/P	PART NUMBER	QYT	REV_REF	
							FR	TO
	+----------+ | 33528K | PIN, RING (FOR CONTROL SHAFT COVER SET BOLT) CONTINUED--+							
1507 - 1901	F653..5F				9004A-25029-	2		
1901 -	F65#..5F				9004A-25029-	2		

FIG.33-12 SHIFT LEVER & RETAINER

(1111-)E4AT

ATM

ATM

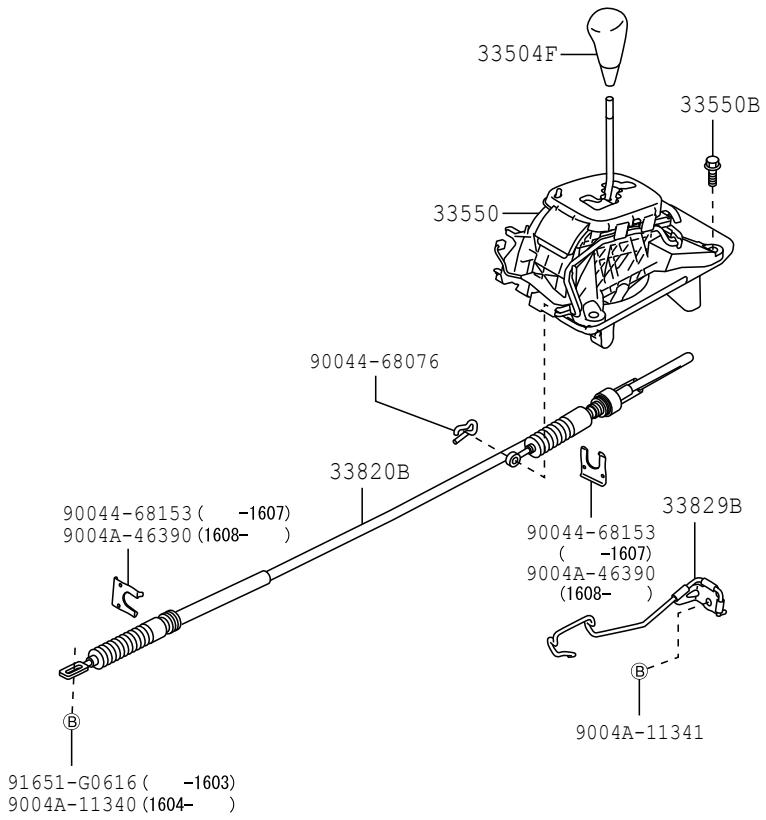

3312

334429-H

FIG.33-12 SHIFT LEVER & RETAINER

(1111-)5F

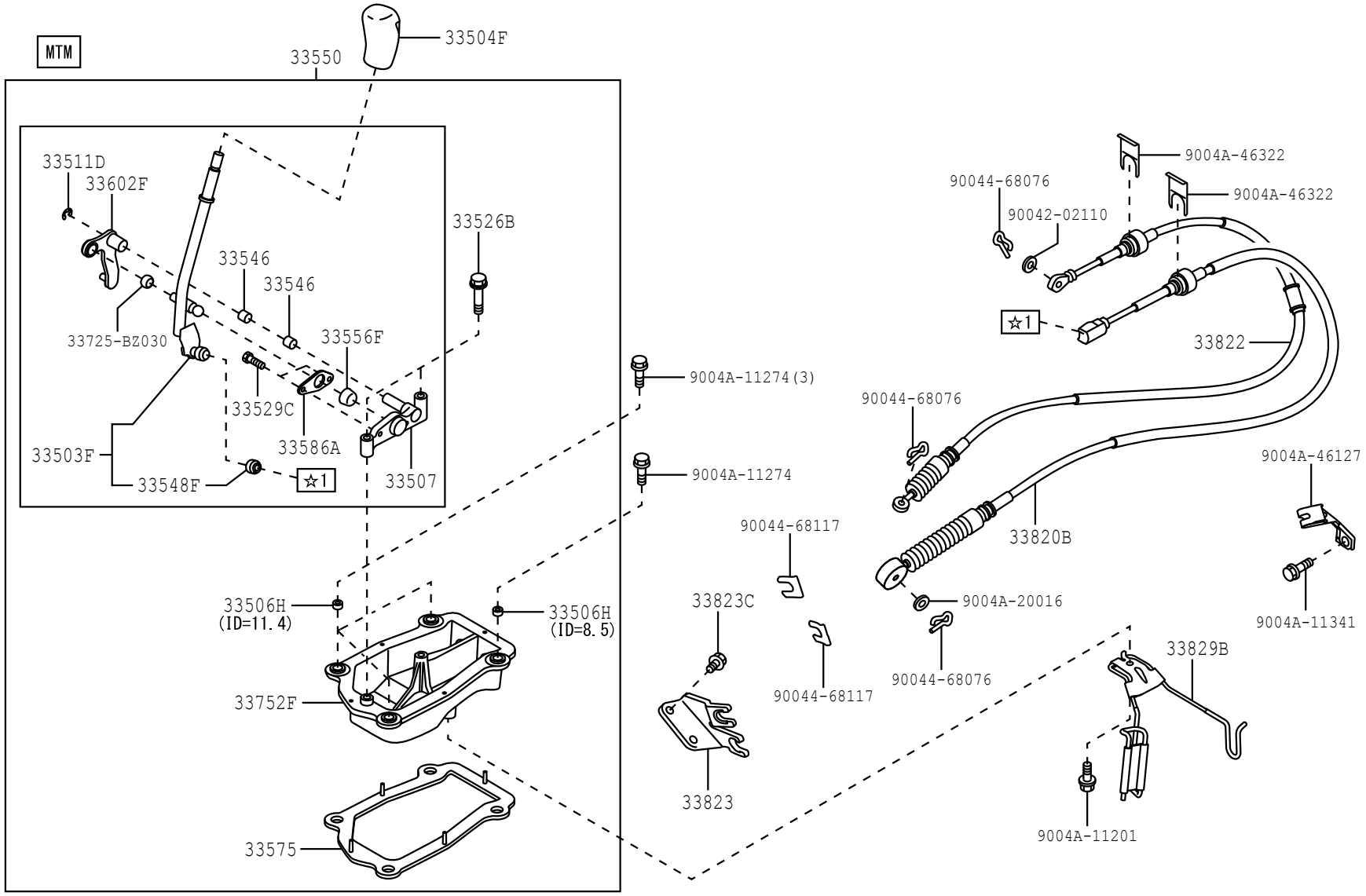

3312

336269-A

PROD_DATE	MODELS	SPEC CODE	DESCRIPTION	R/P	PART NUMBER	QYT	REV_REF FR	REV_REF TO
	+----------+							
	| 33503F | LEVER SUB-ASSY, SHIFT(FOR FLOOR SHIFT)							
	+----------+							
1111 - 1507	F65#..5F				33055-BZ040-	1		
1507 - 1901	F65#..5F				33055-BZ040-	1		
1901 -	F65#..5F				33055-BZ050-	1		
	+----------+							
	| 33504F | KNOB SUB-ASSY, SHIFT LEVER							
	+----------+							
1111 - 1305	F650..LO		BLACK(TRIM4#),L/COVE R		33504-BZ180-C0	1		
1111 - 1305	F651..5F		BLACK(TRIM4#),L/COVE R		33504-BZ180-C0	1		
1111 - 1507	F651..E4AT		BLACK(TRIM4#)		33504-BZ110-C0	1		
1111 - 1507	F650..STD		BLACK(TRIM1#),L/COVE R		33504-BZ180-C0	1		
1305 - 1507	F650..LO		BLACK(TRIM4#),W/COVE R(SILVER)		33504-BZ120-C0	1		
1305 - 1507	F651..5F		BLACK(TRIM4#),W/COVE R(SILVER)		33504-BZ120-C0	1		
1507 - 1607	F650..STD		BLACK(TRIM1#),L/COVE R		33504-BZ180-C0	1		
1507 - 1712	F653..E4AT		BLACK(TRIM4#)		33504-BZ110-C0	1		
1507 - 1712	F653..STD..5F		BLACK(TRIM4#),W/COVE R(SILVER)		33504-BZ120-C0	1		
1507 - 1712	F65#..LO..5F		BLACK(TRIM4#),L/COVE R		33504-BZ180-C0	1		
1712 - 1901	F653..E4AT		BLACK(TRIM4#)		33504-BZ110-C1	1		
1712 - 1901	F653..STD..5F		BLACK(TRIM4#),W/COVE R(SILVER)		33504-BZ120-C1	1		
1712 - 1901	F653..LO..5F		BLACK(TRIM4#),L/COVE R		33504-BZ180-C1	1		
1901 -	F65#..E4AT		BLACK(TRIM4#)		33504-BZ110-C1	1		
1901 -	F65#..STD..5F		BLACK(TRIM4#),W/COVE R(SILVER)		33504-BZ120-C1	1		

FIG.33-12 SHIFT LEVER & RETAINER

PROD_DATE	MODELS	SPEC CODE	DESCRIPTION	R/P	PART NUMBER	QYT	REV_REF FR	REV_REF TO
	+----------+							
	| 33504F | KNOB SUB-ASSY, SHIFT LEVER							
	CONTINUED--+							
1901 -	F653..LO..5F		BLACK(TRIM4#),L/COVE R		33504-BZ180-C1	1		
	+----------+							
	| 33506H | BUSH (FOR SHIFT LEVER RETAINER)							
	+----------+							
1111 - 1507	F65#..5F		ID=8.5		33546-BZ010-	1		
1111 - 1507	F65#..5F		ID=11.4		33546-BZ020-	3		
1507 - 1607	F650		ID=8.5		33546-BZ010-	1		
1507 - 1607	F650		ID=11.4		33546-BZ020-	3		
1507 - 1901	F653..5F		ID=8.5		33546-BZ010-	1		
1507 - 1901	F653..5F		ID=11.4		33546-BZ020-	3		
1901 -	F65#..5F		ID=8.5		33546-BZ010-	1		
1901 -	F65#..5F		ID=11.4		33546-BZ020-	3		
	+----------+							
	| 33507 | BRACKET SUB-ASSY, SHIFT LEVER HOUSING							
	+----------+							
1111 - 1507	F65#..5F				33507-BZ010-	1		
1507 - 1901	F65#..5F				33507-BZ010-	1		
1901 -	F65#..5F				33507-BZ010-	1		
	+----------+							
	| 33511D | RING, E (FOR FLOOR SHIFT CONTROL SHAFT)							
	+----------+							
1111 - 1507	F65#..5F				96160-00800- # (96160-00800-000)	1 1		
1507 - 1901	F65#..5F				96160-00800- # (96160-00800-000)	1 1		
1901 -	F65#..5F				96160-00800- # (96160-00800-000)	1 1		
	+----------+							
	| 33526B | BOLT, SHIFT LEVER HOUSING SET							
	+----------+							
1111 - 1507	F65#..5F				81134-B4010-	2		
1507 - 1901	F65#..5F				81134-B4010-	2		
1901 -	F65#..5F				81134-B4010-	2		

PROD_DATE	MODELS	SPEC CODE	DESCRIPTION	R/P	PART NUMBER	QYT	REV_REF FR	REV_REF TO
	+----------+							
	| 33529C | BOLT, SHIFT LEVER							
	+----------+							
1111 - 1507	F65#..5F				90041-05071-	2		
1507 - 1901	F65#..5F				90041-05071-	2		
1901 -	F65#..5F				90041-05071-	2		
	+----------+							
	| 33546 | BUSH(FOR CONTROL SHIFT LEVER RETAINER)							
	+----------+							
1111 - 1507	F65#..5F				33548-BZ110-	2		
1507 - 1901	F65#..5F				33548-BZ110-	2		
1901 -	F65#..5F				33548-BZ110-	2		
	+----------+							
	| 33548F | BUSH, NO.1, SHIFT LEVER (FOR FLOOR SHIFT)							
	+----------+							
1111 - 1507	F65#..5F				33548-BZ080-	1		
				#	(90043-86132-)	1		
1507 - 1901	F65#..5F				33548-BZ080-	1		
				#	(90043-86132-)	1		
1901 -	F65#..5F				33548-BZ080-	1		
				#	(90043-86132-)	1		
	+----------+							
	| 33550 | FLOOR SHIFT ASSY, TRANSMISSION							
	+----------+							
1111 - 1507	F65#..5F				33550-BZ011-	1		
1111 - 1507	F651..E4AT		BLACK(TRIM4#)		33550-BZ180-C0	1		
1507 - 1604	F653..E4AT		BLACK(TRIM4#)		33550-BZ180-C0	1		
1507 - 1901	F65#..5F				33550-BZ011-	1		
1605 - 1901	F653..E4AT		BLACK(TRIM4#)		33550-BZ181-C0	1		
1901 -	F65#..5F				33550-BZ011-	1		
1901 -	F65#..E4AT		BLACK(TRIM4#)		33550-BZ470-C0	1		
	+----------+							
	| 33550B | BOLT, W/WASHER (FOR FLOOR SHIFT)							
	+----------+							
1111 - 1507	F651..E4AT				91551-80828-	4		
1507 - 1602	F653..E4AT				91551-80828-	4		

FIG.33-12 SHIFT LEVER & RETAINER

PROD_DATE	MODELS	SPEC CODE	DESCRIPTION	R/P	PART NUMBER	QYT	REV_REF FR	REV_REF TO
	+----------+							
	| 33550B | BOLT, W/WASHER (FOR FLOOR SHIFT)							
	CONTINUED--+							
1603 - 1901	F653..E4AT				9004A-10223-	4		
				#	(91551-80828-)	1		
1901 -	F65#..E4AT				9004A-10223-	4		
				#	(91551-80828-)	1		
	+----------+							
	| 33556F | SEAT, TRANSMISSION SHIFT LEVER BALL							
	+----------+							
1111 - 1507	F65#..5F				33556-BZ010-	1		
1507 - 1901	F65#..5F				33556-BZ010-	1		
1901 -	F65#..5F				33556-BZ010-	1		
	+----------+							
	| 33575 | RETAINER, CONTROL SHIFT LEVER (FOR FLOOR SHIFT)							
	+----------+							
1111 - 1507	F65#..5F				33575-BZ010-	1		
1507 - 1607	F650				33575-BZ010-	1		
1507 - 1901	F653..5F				33575-BZ010-	1		
1901 -	F65#..5F				33575-BZ010-	1		
	+----------+							
	| 33586A | STOPPER, CONTROL LEVER (FOR FLOOR SHIFT)							
	+----------+							
1111 - 1507	F65#..5F				33586-BZ020-	1		
1507 - 1901	F65#..5F				33586-BZ020-	1		
1901 -	F65#..5F				33586-BZ020-	1		
	+----------+							
	| 33602F | LEVER SUB-ASSY, SELECT (FOR FLOOR SHIFT)							
	+----------+							
1111 - 1507	F65#..5F				33602-BZ030-	1		
1507 - 1901	F65#..5F				33602-BZ030-	1		
1901 -	F65#..5F				33602-BZ030-	1		
	+----------+							
	| 33752F | SUPPORT, CONTROL LINK (FOR FLOOR SHIFT)							
	+----------+							
1111 - 1507	F65#..5F				33752-BZ010-	1		
1507 - 1607	F650				33752-BZ010-	1		

PROD_DATE	MODELS	SPEC CODE	DESCRIPTION	R/P	PART NUMBER	QYT	REV_REF FR	REV_REF TO
	+----------+							
	| 33752F | SUPPORT, CONTROL LINK (FOR FLOOR SHIFT)							
	CONTINUED--+							
1507 - 1901	F653..5F				33752-BZ010-	1		
1901 -	F65#..5F				33752-BZ010-	1		
	+----------+							
	| 33820B | CABLE ASSY, TRANSMISSION CONTROL							
	+----------+							
1111 - 1507	F651..E4AT				33820-BZ020-	1		
1111 - 1507	F65#..5F				33820-BZ190-	1		
1507 - 1607	F650				33820-BZ191-	1		
1507 - 1901	F653..E4AT				33820-BZ021-	1		
1507 - 1901	F653..5F				33820-BZ191-	1		
1901 -	F65#..E4AT				33820-BZ021-	1		
1901 -	F65#..5F				33820-BZ191-	1		
	+----------+							
	| 33822 | CABLE TRANSMISSION CONTROL SELECT (FOR FLOOR SHIFT)							
	+----------+							
1111 - 1507	F65#..5F				33830-BZ010-	1		
1507 - 1607	F650				33830-BZ011-	1		
1507 - 1901	F653..5F				33830-BZ011-	1		
1901 -	F65#..5F				33830-BZ011-	1		
	+----------+							
	| 33823 | BRACKET, TRANSMISSION CONTROL CABLE, NO.1							
	+----------+							
1111 - 1507	F65#..5F				33823-BZ010-	1		
1507 - 1607	F650				33823-BZ011-	1		
1507 - 1901	F653..5F				33823-BZ011-	1		
1901 -	F65#..5F				33823-BZ011-	1		
	+----------+							
	| 33823C | BOLT (FOR TRANSMISSION CONTROL CABLE BRACKET)							
	+----------+							
1111 - 1507	F65#..5F				90041-05340-	2		
1507 - 1512	F65#..5F				90041-05340-	2		

FIG.33-12 SHIFT LEVER & RETAINER

PROD_DATE	MODELS	SPEC CODE	DESCRIPTION	R/P	PART NUMBER	QYT	REV_REF FR	REV_REF TO
	+----------+							
	| 33823C | BOLT (FOR TRANSMISSION CONTROL CABLE BRACKET)							
	CONTINUED--+							
1512 - 1607	F650				9004A-10213-	2		
				#	(90041-05340-)	1		
1512 - 1901	F653..5F				9004A-10213-	2		
				#	(90041-05340-)	1		
1901 -	F65#..5F				9004A-10213-	2		
				#	(90041-05340-)	1		
	+----------+							
	| 33829B | CLAMP, TRANSMISSION CONTROL CABLE							
	+----------+							
1111 - 1507	F65#..5F				33829-BZ040-	1		
				#	(33829-B0020-)	1		
1111 - 1507	F651..E4AT				33829-BZ080-	1		
				#	(33829-B0030-)	1		
1507 - 1607	F650				33829-BZ040-	1		
				#	(33829-B0020-)	1		
1507 - 1901	F653..5F				33829-BZ040-	1		
				#	(33829-B0020-)	1		
1507 - 1901	F653..E4AT				33829-BZ080-	1		
				#	(33829-B0030-)	1		
1901 -	F65#..5F				33829-BZ040-	1		
				#	(33829-B0020-)	1		
1901 -	F65#..E4AT				33829-BZ080-	1		
				#	(33829-B0030-)	1		

(1111-)E4AT

A4Q-D1

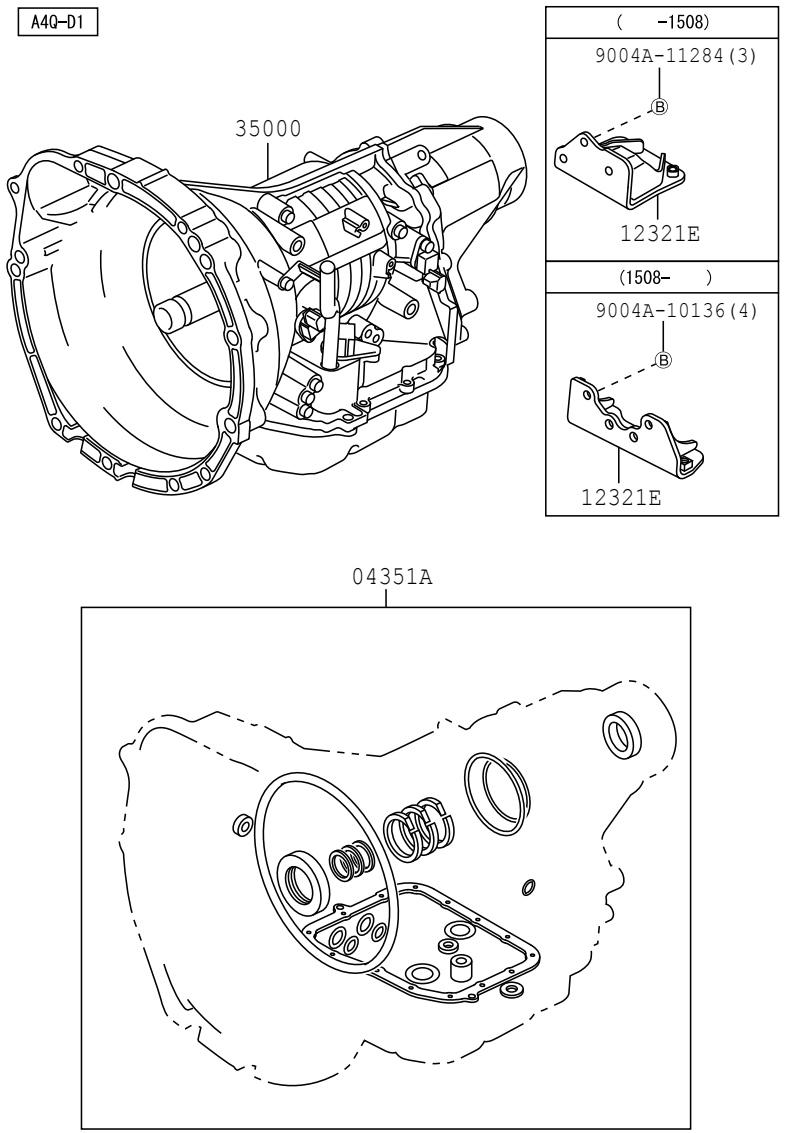

3501

358114-G

FIG.35-01 TRANSAXLE OR TRANSMISSION ASSY & GASKET KIT (ATM)

PROD_DATE	MODELS	SPEC CODE	DESCRIPTION	R/P	PART NUMBER	QYT	REV_REF FR	REV_REF TO
	+----------+							
	| 04351A | GASKET KIT, TRANSAXLE OVERHAUL(ATM)							
	+----------+							
1111 - 1507	F651..E4AT				04351-B0020-	1		
				#	(04351-B0021-)	1		
1507 - 1605	F653..E4AT				04351-B0030-	1		
				#	(04351-B0040-)	1		
1606 - 1901	F653..E4AT				04351-B0040-	1		
1901 -	F65#..E4AT				04351-B0040-	1		
	+----------+							
	| 12321E | BRACKET, ENGINE MOUNTIMG, REAR							
	+----------+							
1111 - 1507	K3VE..F651..E4AT				12321-BZ110-	1		
1507 - 1901	1NRVE..F653..E4AT				12321-BZ260-	1		
1901 -	1NRVE,2NRVE..F65#..E4AT				12321-BZ260-	1		
	+----------+							
	| 35000 | TRANSMISSION ASSY, AUTOMATIC							
	+----------+							
1111 - 1507	F651..E4AT		KH8		35000-B0030-	1		
1507 - 1901	F653..E4AT				35000-B1010-	1		
1901 -	F653..E4AT				35000-B1010-	1		
1901 -	F654..E4AT				35000-B1020-	1		

FIG.35-02 TORQUE CONVERTER, FRONT OIL PUMP & CHAIN (ATM)

(1111-1507)E4AT

A4Q-D1

A4Q-D1

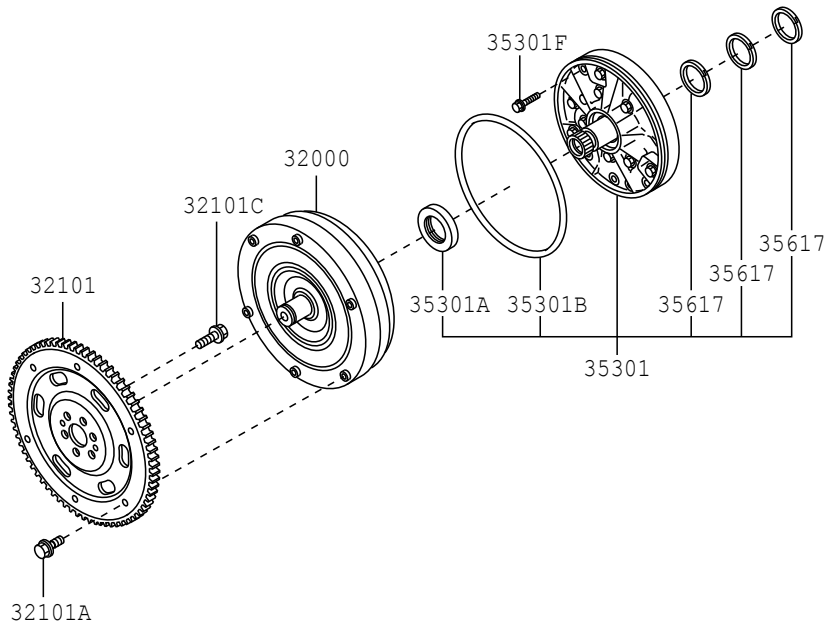

3502

358115-C

FIG.35-02 TORQUE CONVERTER, FRONT OIL PUMP & CHAIN (ATM)

(1507-)E4AT

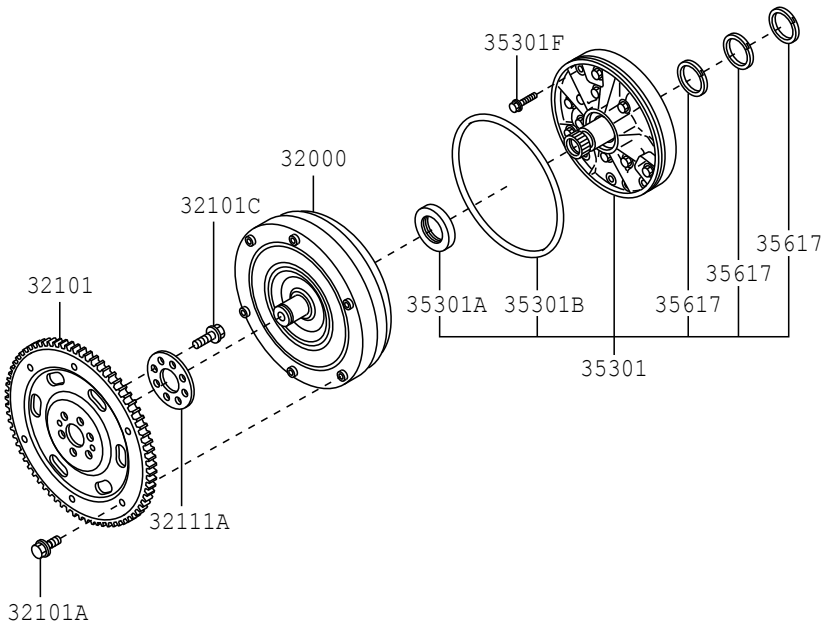

3502

359464

PROD_DATE	MODELS	SPEC CODE	DESCRIPTION	R/P	PART NUMBER	QYT	REV_REF FR	REV_REF TO
	+----------+							
	| 32000 | CONVERTER ASSY, TORQUE							
	+----------+							
1111 - 1507	F651..E4AT				32000-B1020-	1		
1507 - 1901	F653..E4AT				32000-B1020-	1		
1901 -	F654..E4AT				32000-B0010-	1		
1901 -	F653..E4AT				32000-B1020-	1		
	+----------+							
	| 32101 | GEAR SUB-ASSY, DRIVE PLATE & RING							
	+----------+							
1111 - 1507	F651..E4AT				32101-B1020-	1		
1507 - 1901	F653..E4AT				32101-BZ050-	1		
1901 -	F65#..E4AT				32101-BZ050-	1		
	+----------+							
	| 32101A | BOLT(FOR DRIVE PLATE & TORQUE CONVERTER SETTING)							
	+----------+							
1111 - 1507	F651..E4AT		M8,L=9.5,SILVER		90041-05273-	1		
1111 - 1507	F651..E4AT		M8,L=9.5,BLACK		90041-05281-	5		
1507 - 1901	F653..E4AT		M8,L=9.5,SILVER		90041-05273-	1		
1507 - 1901	F653..E4AT		M8,L=9.5,BLACK		90041-05281-	5		
1901 - 2008	F65#..E4AT		M8,L=9.5,SILVER		90041-05273-	1		
1901 - 2008	F65#..E4AT		M8,L=9.5,BLACK		90041-05281-	5		
2008 -	F65#..E4AT		M8,L=9,SILVER		90041-05595-	1		
2008 -	F65#..E4AT		M8,L=9,BLACK		90041-05596-	5		
	+----------+							
	| 32101C | BOLT, HEXAGON(FOR DRIVE PLATE SETTING)							
	+----------+							
1111 - 1507	F651..E4AT				90048-01037-	6		
1507 - 1901	F653..E4AT				9004A-10200-	8		
				#	(90048-01037-)	1		
1901 -	F65#..E4AT				9004A-10200-	8		
				#	(90048-01037-)	1		
	+----------+							
	| 32111A | PLATE(FOR PUMP IMPELLER DRIVE PLATE)							
	+----------+							
1507 - 1901	F653..E4AT				32113-BZ030-	1		

FIG.35-02 TORQUE CONVERTER, FRONT OIL PUMP & CHAIN (ATM)

PROD_DATE	MODELS	SPEC CODE	DESCRIPTION	R/P	PART NUMBER	QYT	REV_REF FR	REV_REF TO
	+----------+							
	| 32111A | PLATE(FOR PUMP IMPELLER DRIVE PLATE)							
	CONTINUED--+							
1901 -	F65#..E4AT				32113-BZ030-	1		
	+----------+							
	| 35301 | BODY SUB-ASSY, FRONT OIL PUMP							
	+----------+							
1111 - 1507	F651..E4AT				35310-97203-	1		
1507 - 1603	F653..E4AT				35310-B1040-	1		
				#	(35310-B1050-)	1		
1604 - 1901	F653..E4AT				35310-B1050-	1		
1901 -	F65#..E4AT				35310-B1050-	1		
	+----------+							
	| 35301A | SEAL, OIL (FOR FRONT OIL PUMP)							
	+----------+							
1111 - 1507	F651..E4AT				90043-11336-	1		
1507 - 1901	F653..E4AT				90043-11336-	1		
1901 -	F65#..E4AT				90043-11336-	1		
	+----------+							
	| 35301B | RING, O (FOR FRONT OIL PUMP BODY)							
	+----------+							
1111 - 1507	F651..E4AT				90043-01161-	1		
1507 - 1901	F653..E4AT				90043-01161-	1		
1901 -	F65#..E4AT				90043-01161-	1		
	+----------+							
	| 35301F | BOLT (FOR FRONT OIL PUMP SETTING)							
	+----------+							
1111 - 1507	F651..E4AT				90041-05122-	7		
1507 - 1901	F653..E4AT				90041-05122-	7		
1901 -	F65#..E4AT				90041-05122-	7		
	+----------+							
	| 35617 | RING, CLUTCH DRUM OIL SEAL							
	+----------+							
1111 - 1507	F651..E4AT				35653-97201-	3		
				#	(35653-B1010-)	1		
1507 - 1603	F653..E4AT				35653-97201-	3		
				#	(35653-B1010-)	1		
1604 - 1901	F653..E4AT				35653-B1010-	3		

FIG.35-02 TORQUE CONVERTER, FRONT OIL PUMP & CHAIN (ATM)

PROD_DATE	MODELS	SPEC CODE	DESCRIPTION	R / P	PART NUMBER	QYT	REV_REF	
							FR	TO
	+----------+ | 35617 | RING, CLUTCH DRUM OIL SEAL CONTINUED--+							
1901 -	F65#..E4AT				35653-B1010-	3		

FIG.35-03 TRANSMISSION CASE & OIL PAN (ATM)

(1111-1507)E4AT

A4Q-D1

A4Q-D1

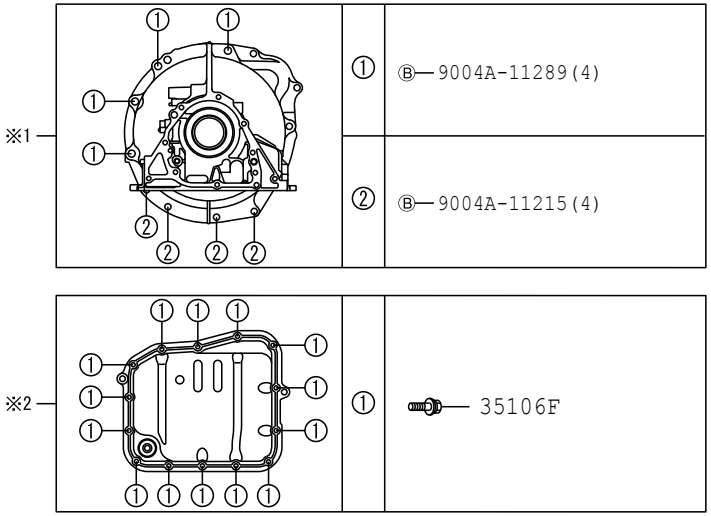

①	①	Ⓑ— 9004A-11289(4)
	②	Ⓑ— 9004A-11215(4)
※2	①	35106F

FIG.35-03 TRANSMISSION CASE & OIL PAN (ATM)

(1111-1507)E4AT

A4Q-D1

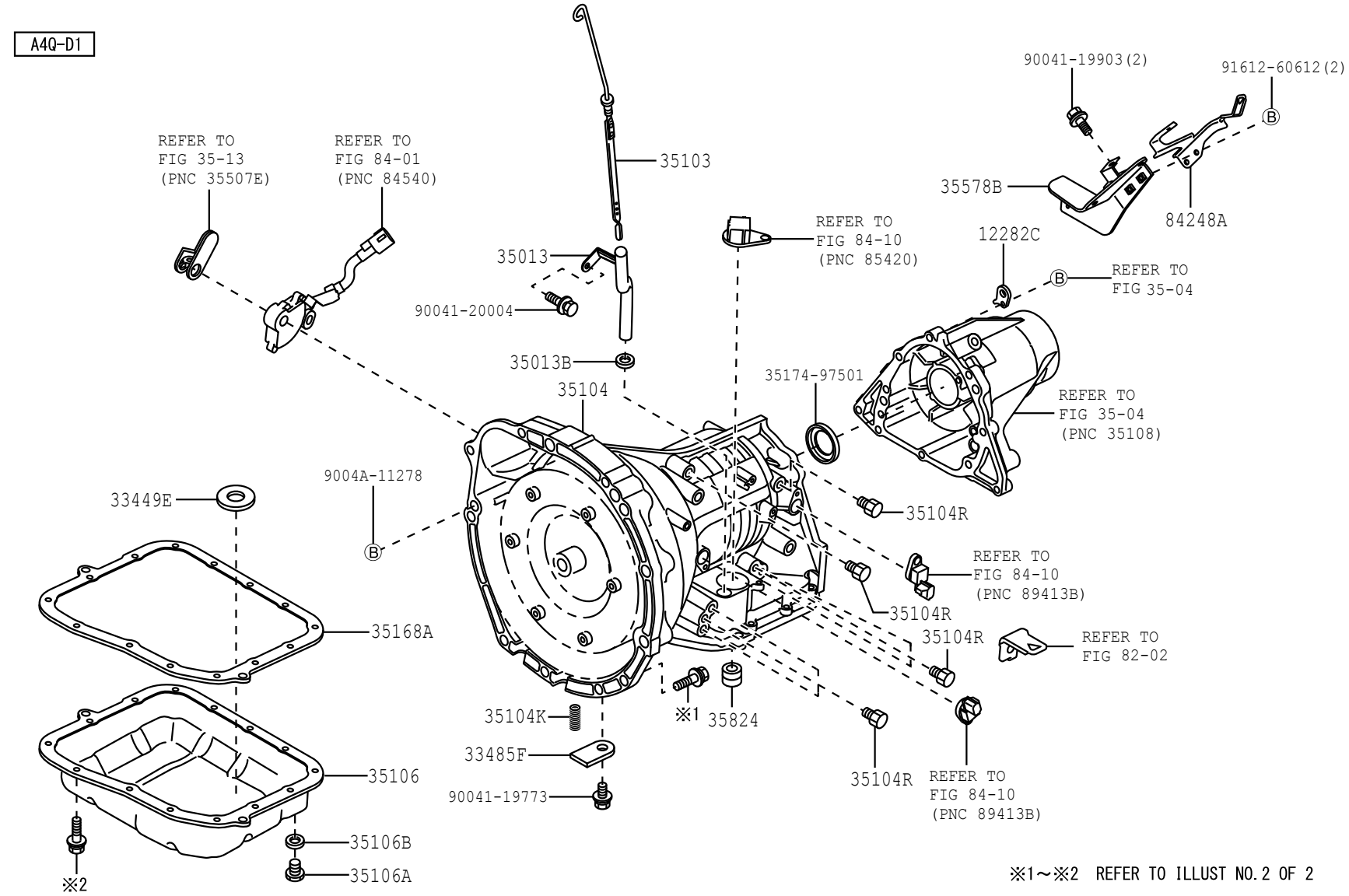

3503

358211-D

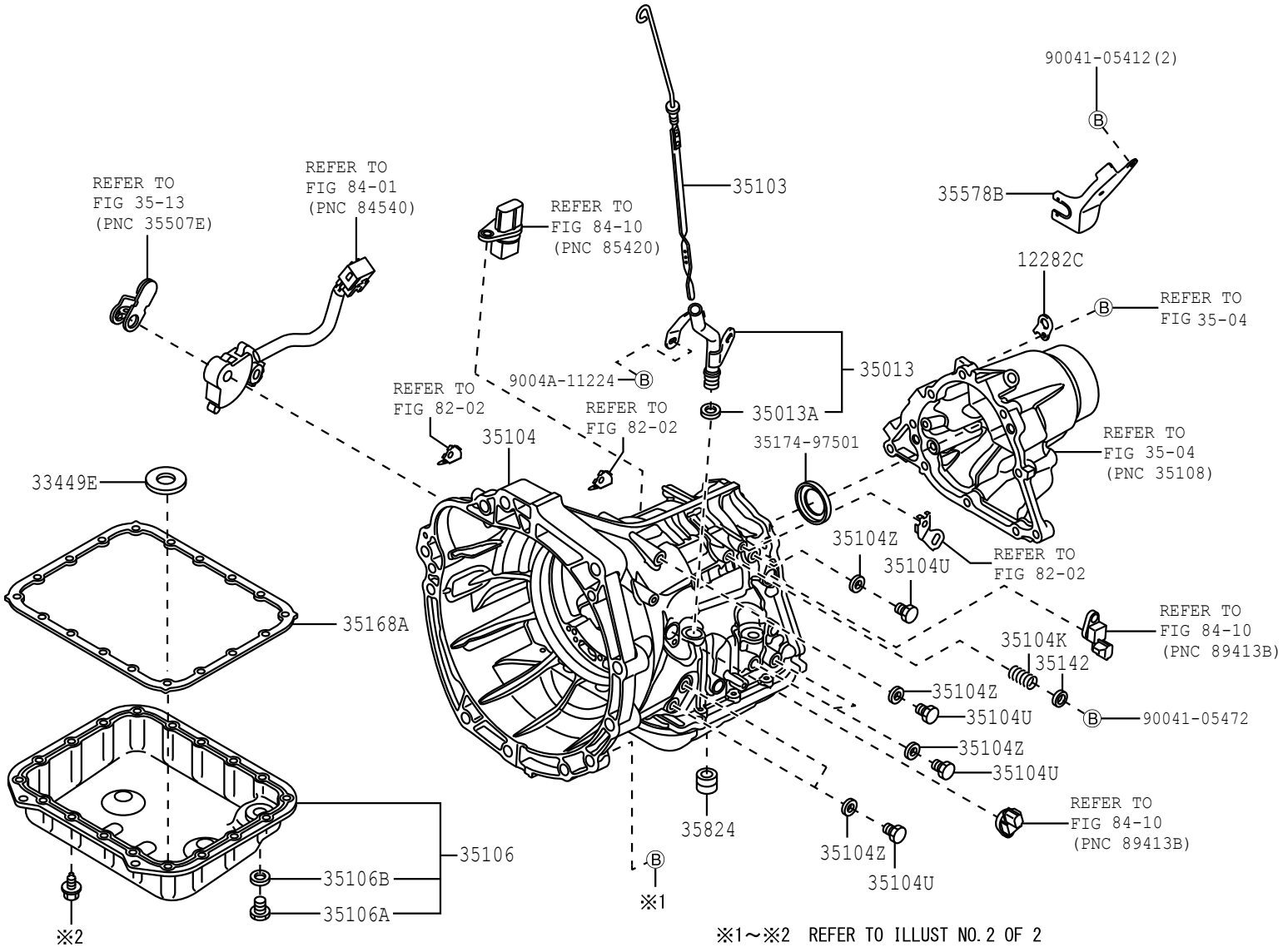

※1～※2 REFER TO ILLUST NO.2 OF 2

3503

359368-B

(1507-)E4AT

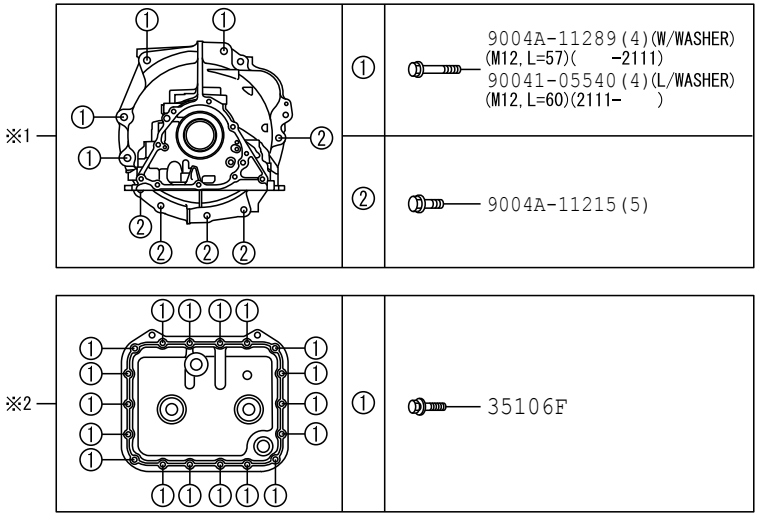

3503

359369-A

FIG.35-03 TRANSMISSION CASE & OIL PAN (ATM)

PROD_DATE	MODELS	SPEC CODE	DESCRIPTION	R/P	PART NUMBER	QYT	REV_REF FR	REV_REF TO
	12282C		HANGER, ENGINE, NO.2					
1111 - 1507	K3VE..F651..E4AT				12282-B5030-	1		
1507 - 1901	1NRVE..F653..E4AT				12282-B1020-	1		
1901 -	1NRVE,2NRVE..F65#..E4AT				12282-B1020-	1		
	33449E		MAGNET, TRANSAXLE					
1111 - 1507	F651..E4AT				33449-B2010-	1		
1507 - 1901	F653..E4AT				33449-B2010-	1		
1901 -	F65#..E4AT				33449-B2010-	1		
	33485F		PLATE, SPEEDMETER LOCK					
1111 - 1507	F651..E4AT				33485-87201-	1		
	35013		TUBE SUB-ASSY, TRANSMISSION OIL FILLER					
1111 - 1507	F651..E4AT				35013-87402-	1		
1507 - 1901	F653..E4AT				35013-B1050-	1		
1901 -	F65#..E4AT				35013-B1050-	1		
	35013A		RING, O(FOR TRANSMISSION OIL FILLER TUBE)					
1507 - 1901	F653..E4AT				90043-01193-	1		
1901 -	F65#..E4AT				90043-01193-	1		
	35013B		RING, O (FOR TRANSMISSION OIL FILLER TUBE)					
1111 - 1507	F651..E4AT				90043-01193-	1		
	35103		GAGE SUB-ASSY, TRANSMISSION OIL LEVEL					
1111 - 1507	F651..E4AT				35103-B0010-	1		
1507 - 1901	F653..E4AT				35103-BZ040-	1		
1901 -	F65#..E4AT				35103-BZ040-	1		

PROD_DATE	MODELS	SPEC CODE	DESCRIPTION	R/P	PART NUMBER	QYT	REV_REF FR	REV_REF TO
	+----------+							
	| 35104 | CASE SUB-ASSY, AUTOMATIC TRANSMISSION							
	+----------+							
1111 - 1505	F651..E4AT				35141-B0011-	1		
				#	(35141-B0012-)	1		
1506 - 1507	F651..E4AT				35141-B0012-	1		
1507 - 1901	F653..E4AT				35141-B1070-	1		
1901 -	F65#..E4AT				35141-B1070-	1		
	+----------+							
	| 35104K | COMPRESSION SPRING, TRANSAXLE CASE							
	+----------+							
1111 - 1507	F651..E4AT				90045-01801-	1		
1507 - 1901	F653..E4AT				90045-01951-	1		
1901 -	F65#..E4AT				90045-01951-	1		
	+----------+							
	| 35104R | PLUG, NO.2 (FOR TRANSAXLE CASE)							
	+----------+							
1111 - 1507	F651..E4AT				90043-45040-	8		
	+----------+							
	| 35104U | BOLT (FOR TRANSAXLE CASE)							
	+----------+							
1507 - 1901	F653..E4AT				90041-05404-	6		
1901 -	F65#..E4AT				90041-05404-	6		
	+----------+							
	| 35104Z | GASKET (FOR TRANSAXLE CASE)							
	+----------+							
1507 - 1901	F653..E4AT				90044-30317-	6		
1901 -	F65#..E4AT				90044-30317-	6		
	+----------+							
	| 35106 | PAN SUB-ASSY, AUTOMATIC TRANSMISSION OIL							
	+----------+							
1111 - 1507	F651..E4AT				35106-B1020-	1		
1507 - 1901	F653..E4AT				35160-B1050-	1		
1901 -	F65#..E4AT				35160-B1050-	1		
	+----------+							
	| 35106A | PLUG SUB-ASSY, DRAIN (ATM)							
	+----------+							
1111 - 1507	F651..E4AT				90043-41041-	1		

FIG.35-03 TRANSMISSION CASE & OIL PAN (ATM)

PROD_DATE	MODELS	SPEC CODE	DESCRIPTION	R/P	PART NUMBER	QYT	REV_REF FR	REV_REF TO
	+----------+							
	| 35106A | PLUG SUB-ASSY, DRAIN (ATM)							
	CONTINUED--+							
1507 - 1901	F653..E4AT				90043-41041-	1		
1901 -	F65#..E4AT				90043-41041-	1		
	+----------+							
	| 35106B | GASKET, DRAIN PLUG (ATM)							
	+----------+							
1111 - 1507	F651..E4AT				90044-30281-	1		
1507 - 1901	F653..E4AT				90044-30281-	1		
1901 -	F65#..E4AT				90044-30281-	1		
	+----------+							
	| 35106F | BOLT (FOR AUTOMATIC TRANSMISSION OIL PAN)							
	+----------+							
1111 - 1507	F651..E4AT				90041-20203-	14		
1507 - 1901	F653..E4AT				90041-20203-	18		
1901 -	F65#..E4AT				90041-20203-	18		
	+----------+							
	| 35142 | GASKET, TRANSMISSION CASE(ATM)							
	+----------+							
1507 - 1901	F653..E4AT				90044-30330-	1		
1901 -	F65#..E4AT				90044-30330-	1		
	+----------+							
	| 35168A | GASKET, AUTOMATIC TRANSAXLE OIL PAN							
	+----------+							
1111 - 1507	F651..E4AT				35168-B1020-	1		
1507 - 1901	F653..E4AT				35168-B1060-	1		
1901 -	F65#..E4AT				35168-B1060-	1		
	+----------+							
	| 35578B | BRACKET, TRANSMISSION CONTROL CABLE							
	+----------+							
1111 - 1507	F651..E4AT				33524-B0010-	1		
1507 - 1901	F653..E4AT				33524-B1040-	1		
1901 -	F65#..E4AT				33524-B1040-	1		
	+----------+							
	| 35824 | SEAL, BRAKE CYLINDER							
	+----------+							
1111 - 1507	F651..E4AT				35824-97501-	1		

FIG.35-03 TRANSMISSION CASE & OIL PAN (ATM)

PROD_DATE	MODELS	SPEC CODE	DESCRIPTION	R/P	PART NUMBER	QYT	REV_REF	
							FR	TO
	+----------+ | 35824 | SEAL, BRAKE CYLINDER CONTINUED--+							
1507 - 1901	F653..E4AT				35824-97501-	1		
1901 -	F65#..E4AT				35824-97501-	1		
	+----------+ | 84248A | CLAMP, SWITCH HARNESS +----------+							
1111 - 1507	F651..E4AT				84248-BZ020-	1		

FIG. 35-04 EXTENSION HOUSING (ATM)

(1111-1507)E4AT

A4Q-D1

A4Q-D1

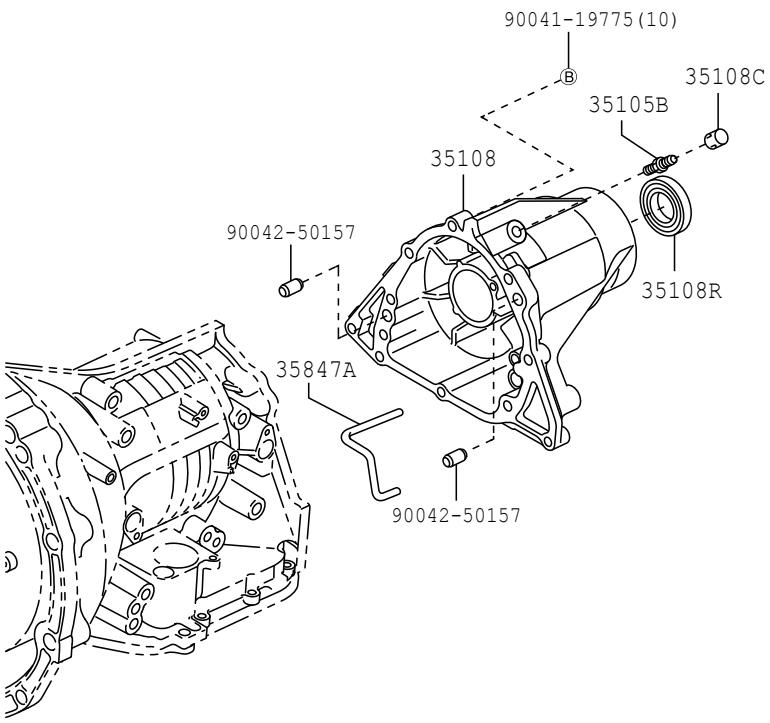

3504

358118-C

FIG. 35-04 EXTENSION HOUSING (ATM)

(1507-)E4AT

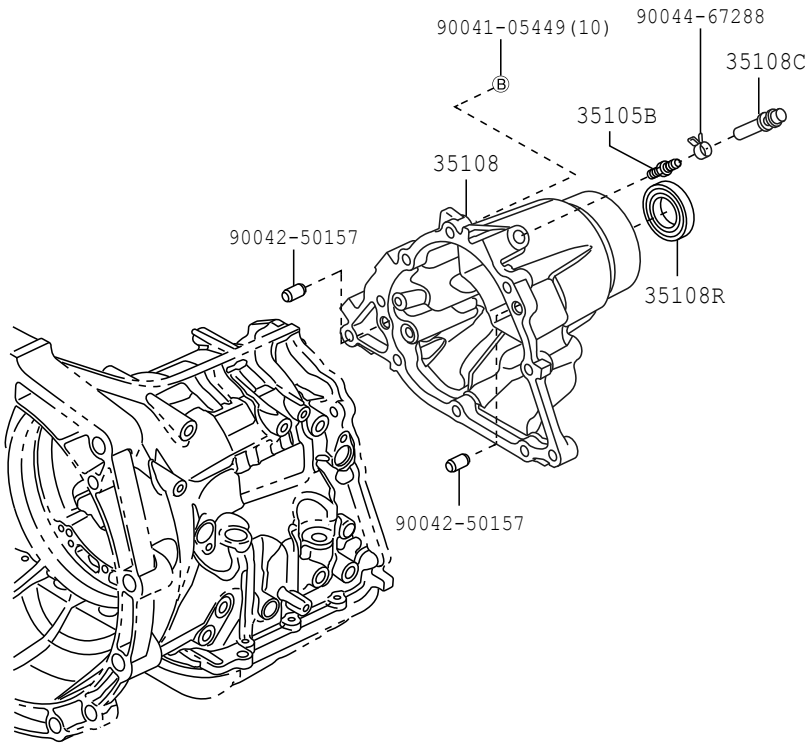

3504

359359

FIG.35-04 EXTENSION HOUSING (ATM)

PROD_DATE	MODELS	SPEC CODE	DESCRIPTION	R/P	PART NUMBER	QYT	REV_REF FR	REV_REF TO
	+----------+							
	| 35105B | PLUG, BREATH							
	+----------+ ER							
1111 - 1507	F651..E4AT				90049-15048-	1		
1507 - 1901	F653..E4AT				90049-15054-	1		
1901 -	F65#..E4AT				90049-15054-	1		
	+----------+							
	| 35108 | HOUSING SUB-ASSY, EXTENSION (ATM)							
	+----------+							
1111 - 1507	F651..E4AT				35108-B0011-	1		
1507 - 1901	F653..E4AT				35108-B1010-	1		
1901 -	F65#..E4AT				35108-B1010-	1		
	+----------+							
	| 35108C | PLUG (FOR AUTOMATIC EXTENSION HOUSING)							
	+----------+							
1111 - 1507	F651..E4AT				90049-15050-	1		
1507 - 1711	F653..E4AT				35120-B0010-	1		
1712 - 1901	F653..E4AT				35120-B0020-	1		
1901 -	F65#..E4AT				35120-B0020-	1		
	+----------+							
	| 35108R | SEAL, OIL (FOR AUTOMATIC TRANSMISSION EXTENSION HOUSING)							
	+----------+							
1111 - 1507	F651..E4AT				90043-11285-	1		
1507 - 1901	F653..E4AT				90043-11285-	1		
1901 -	F65#..E4AT				90043-11285-	1		
	+----------+							
	| 35847A | TUBE, EXTENSION HOUSING BUSH APPLY							
	+----------+							
1111 - 1507	F651..E4AT				35847-97501-	1		

FIG.35-07 BRAKE BAND & MULTIPLE DISC CLUTCH (ATM)

(1111-)E4AT

A4Q-D1 ILLUST NO. 1 OF 2

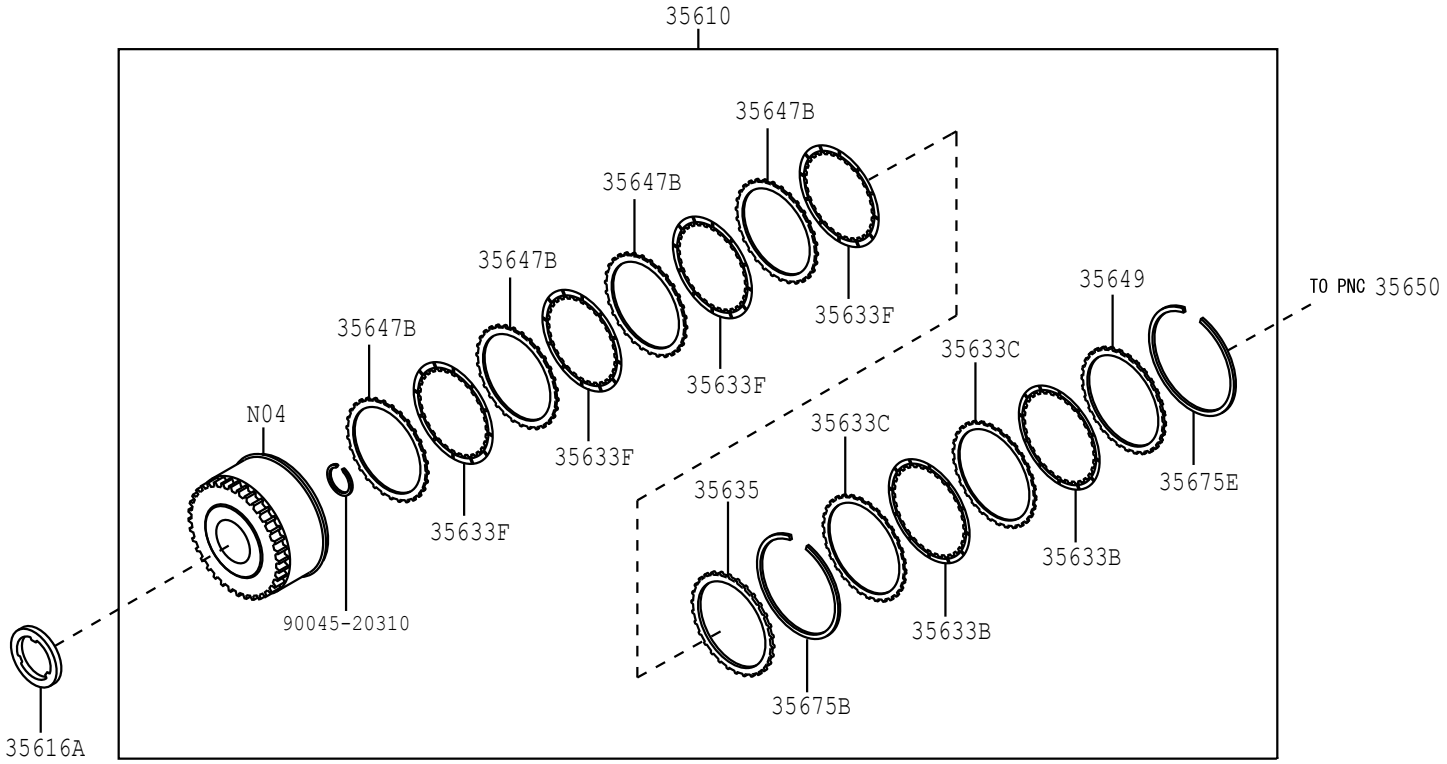

N04 This part is not available for service

FIG.35-07 BRAKE BAND & MULTIPLE DISC CLUTCH (ATM)

(1111-1507)E4AT

A4Q-D1 ILLUST NO. 2 OF 2

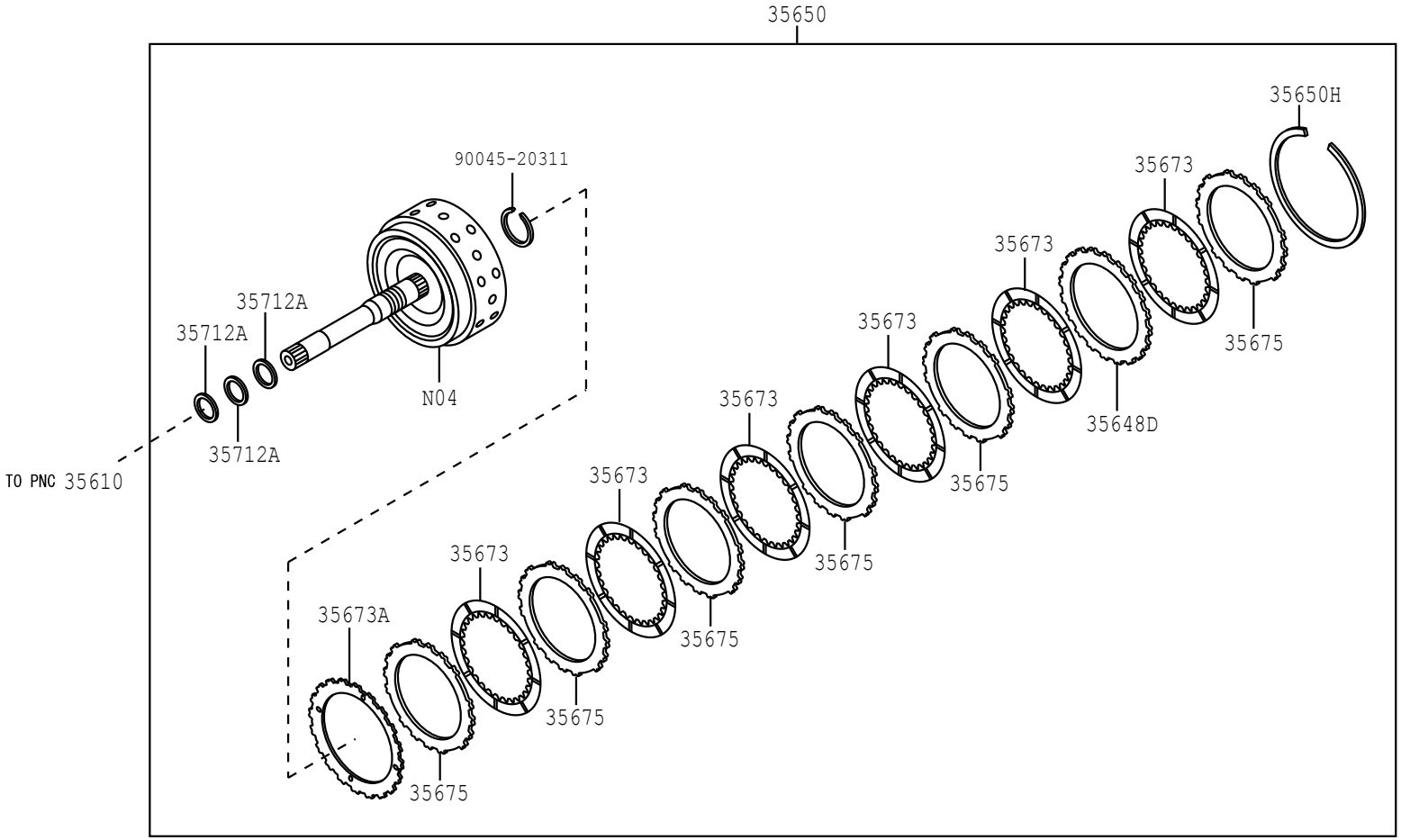

N04 This part is not available for service

FIG.35-07 BRAKE BAND & MULTIPLE DISC CLUTCH (ATM)

(1507-)E4AT

ILLUST NO. 2 OF 2

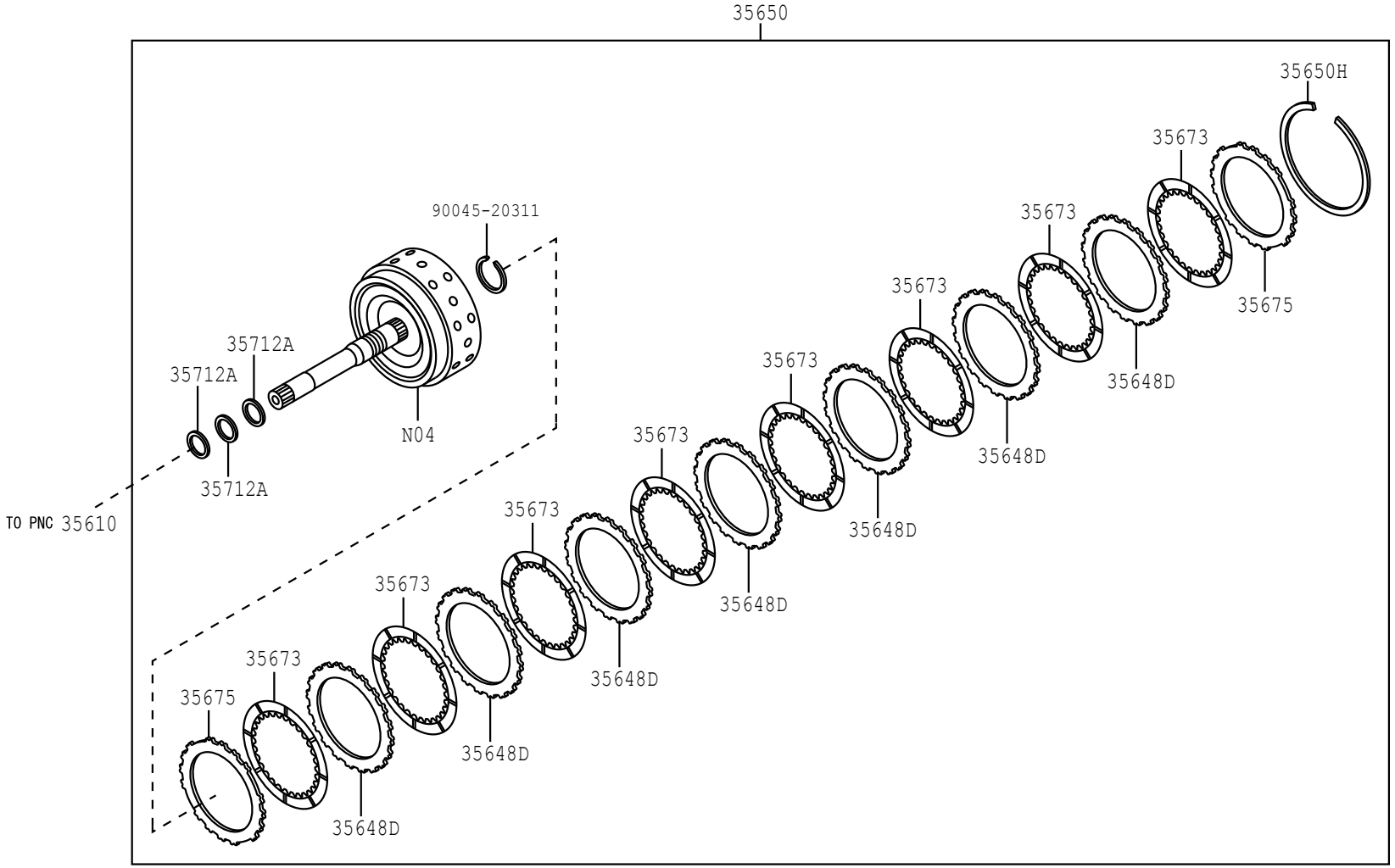

N04 This part is not available for service

3507

359352

PROD_DATE	MODELS	SPEC CODE	DESCRIPTION	R/P	PART NUMBER	QYT	REV_REF FR	REV_REF TO
	+----------+							
	| 35610 | CLUTCH ASSY, FRONT MULTIPLE DISC							
	+----------+							
1111 - 1507	F651..E4AT				35610-97204-	1		
1507 - 1603	F653..E4AT				35610-97204-	1		
1604 - 1901	F653..E4AT				35610-B1030-	1		
1901 -	F65#..E4AT				35610-B1030-	1		
	+----------+							
	| 35616A | BEARING, FRONT CLUTCH THRUST							
	+----------+							
1111 - 1507	F651..E4AT		T=3.81		90043-74043-	1		
1111 - 1507	F651..E4AT		T=3.41		90043-74044-	1		
1111 - 1507	F651..E4AT		T=4.21		90043-74045-	1		
1507 - 1901	F653..E4AT		T=3.81		90043-74043-	1		
1507 - 1901	F653..E4AT		T=3.41		90043-74044-	1		
1507 - 1901	F653..E4AT		T=4.21		90043-74045-	1		
1901 -	F65#..E4AT		T=3.81		90043-74043-	1		
1901 -	F65#..E4AT		T=3.41		90043-74044-	1		
1901 -	F65#..E4AT		T=4.21		90043-74045-	1		
	+----------+							
	| 35633B | DISC, CLUTCH (FOR FORWARD MULTIPLE DISC CLUTCH)							
	+----------+							
1111 - 1507	F651..E4AT				35633-97205-	2		
				#	(35633-B1010-)	1		
1507 - 1603	F653..E4AT				35633-97205-	2		
				#	(35633-B1010-)	1		
1604 - 1901	F653..E4AT				35633-B1010-	2		
1901 -	F65#..E4AT				35633-B1010-	2		
	+----------+							
	| 35633C | DISC, CLUTCH (FOR DIRECT MULTIPLE DISC CLUTCH)							
	+----------+							
1111 - 1507	F651..E4AT				35634-97206-	2		
1507 - 1901	F653..E4AT				35634-97206-	2		
1901 -	F65#..E4AT				35634-97206-	2		

FIG.35-07 BRAKE BAND & MULTIPLE DISC CLUTCH (ATM)

PROD_DATE	MODELS	SPEC CODE	DESCRIPTION	R/P	PART NUMBER	QYT	REV_REF FR	REV_REF TO
	+----------+							
	| 35633F | DISC, CLUTCH (FOR FRONT CLUTCH)							
	+----------+							
1111 - 1507	F651..E4AT				35667-97206-	4		
1507 - 1901	F653..E4AT				35667-97206-	4		
1901 -	F65#..E4AT				35667-97206-	4		
	+----------+							
	| 35635 | FLANGE, FORWARD CLUTCH							
	+----------+							
1111 - 1507	F651..E4AT		T=3.0		35635-97201-	1		
1507 - 1901	F653..E4AT		T=3.0		35635-97201-	1		
1901 -	F65#..E4AT		T=3.0		35635-97201-	1		
	+----------+							
	| 35647B | PLATE, CLUTCH, NO.2							
	+----------+							
1111 - 1507	F651..E4AT				35647-97204-	4		
1507 - 1901	F653..E4AT				35647-97204-	4		
1901 -	F65#..E4AT				35647-97204-	4		
	+----------+							
	| 35648D | PLATE, CLUTCH, NO.3							
	+----------+							
1111 - 1507	F651..E4AT		T=2.0		35648-97205-	1		
1507 - 1901	F653..E4AT		T=2.0		35648-97205-	7		
1901 -	F65#..E4AT		T=2.0		35648-97205-	7		
	+----------+							
	| 35649 | FLANGE, REVERSE CLUTCH							
	+----------+							
1111 - 1507	F651..E4AT		T=3.0		35675-97201-	1		
1507 - 1901	F653..E4AT		T=3.0		35675-97201-	1		
1901 -	F65#..E4AT		T=3.0		35675-97201-	1		
	+----------+							
	| 35650 | CLUTCH ASSY, REAR MULTIPLE DISC							
	+----------+							
1111 - 1507	F651..E4AT				35650-B1030-	1		
1507 - 1901	F653..E4AT				35650-B1020-	1		
1901 -	F65#..E4AT				35650-B1020-	1		

PROD_DATE	MODELS	SPEC CODE	DESCRIPTION	R/P	PART NUMBER	QYT	REV_REF FR	REV_REF TO
	+----------+							
	| 35650H | RING, HOLE SNAP (FOR REAR MULTIPLE DISC CLUTHC)							
	+----------+							
1111 - 1507	F651..E4AT		T=1.5		90045-21170-	1		
1111 - 1507	F651..E4AT		T=1.75		90045-21171-	1		
1111 - 1507	F651..E4AT		T=2.0		90045-21172-	1		
1111 - 1507	F651..E4AT		T=2.25		90045-21173-	1		
1507 - 1901	F653..E4AT		T=1.5		90045-21170-	1		
1507 - 1901	F653..E4AT		T=1.75		90045-21171-	1		
1507 - 1901	F653..E4AT		T=2.0		90045-21172-	1		
1507 - 1901	F653..E4AT		T=2.25		90045-21173-	1		
1901 -	F65#..E4AT		T=1.5		90045-21170-	1		
1901 -	F65#..E4AT		T=1.75		90045-21171-	1		
1901 -	F65#..E4AT		T=2.0		90045-21172-	1		
1901 -	F65#..E4AT		T=2.25		90045-21173-	1		
	+----------+							
	| 35673 | DISC, REAR CLUTCH							
	+----------+							
1111 - 1507	F651..E4AT				35677-B1011-	6		
1507 - 1901	F653..E4AT				35677-B1011-	8		
1901 -	F65#..E4AT				35677-B1011-	8		
	+----------+							
	| 35673A | PLATE, REAR CLUTCH CUSHION							
	+----------+							
1111 - 1507	F651..E4AT				35673-B1010-	1		
	+----------+							
	| 35675 | FLANGE, REAR CLUTCH							
	+----------+							
1111 - 1507	F651..E4AT		T=3.0		35689-B1010-	6		
1507 - 1901	F653..E4AT		T=3.0		35689-B1010-	2		
1901 -	F65#..E4AT		T=3.0		35689-B1010-	2		
	+----------+							
	| 35675B | RING, HOLE SNAP (FOR FORWARD CLUTCH FLANG							
	+----------+ E)							
1111 - 1507	F651..E4AT		T=1.5		90045-21164-	1		

FIG.35-07 BRAKE BAND & MULTIPLE DISC CLUTCH (ATM)

PROD_DATE	MODELS	SPEC CODE	DESCRIPTION	R/P	PART NUMBER	QYT	REV_REF FR	REV_REF TO
	+----------+							
	| 35675B | RING, HOLE SNAP (FOR FORWARD CLUTCH FLANG							
	CONTINUED--+ E)							
1111 - 1507	F651..E4AT		T=1.75		90045-21166-	1		
1111 - 1507	F651..E4AT		T=2.0		90045-21167-	1		
1111 - 1507	F651..E4AT		T=2.25		90045-21168-	1		
1111 - 1507	F651..E4AT		T=2.5		90045-21169-	1		
1507 - 1901	F653..E4AT		T=1.5		90045-21164-	1		
1507 - 1901	F653..E4AT		T=1.75		90045-21166-	1		
1507 - 1901	F653..E4AT		T=2.0		90045-21167-	1		
1507 - 1901	F653..E4AT		T=2.25		90045-21168-	1		
1507 - 1901	F653..E4AT		T=2.5		90045-21169-	1		
1901 -	F65#..E4AT		T=1.5		90045-21164-	1		
1901 -	F65#..E4AT		T=1.75		90045-21166-	1		
1901 -	F65#..E4AT		T=2.0		90045-21167-	1		
1901 -	F65#..E4AT		T=2.25		90045-21168-	1		
1901 -	F65#..E4AT		T=2.5		90045-21169-	1		
	+----------+							
	| 35675E | RING, HOLE SNAP (FOR REAR CLUTCH FLANGE)							
	+----------+							
1111 - 1507	F651..E4AT				90045-21165-	1		
1507 - 1901	F653..E4AT				90045-21165-	1		
1901 -	F65#..E4AT				90045-21165-	1		
	+----------+							
	| 35712A | RING, INPUT SHAFT OIL SEAL							
	+----------+							
1111 - 1507	F651..E4AT				35712-97201-	3		
1507 - 1901	F653..E4AT				35712-97201-	3		
1901 -	F65#..E4AT				35712-97201-	3		

FIG.35-09 BRAKE NO.3, 1ST & REVERSE BRAKE (ATM)

(1111-)E4AT

A4Q-D1

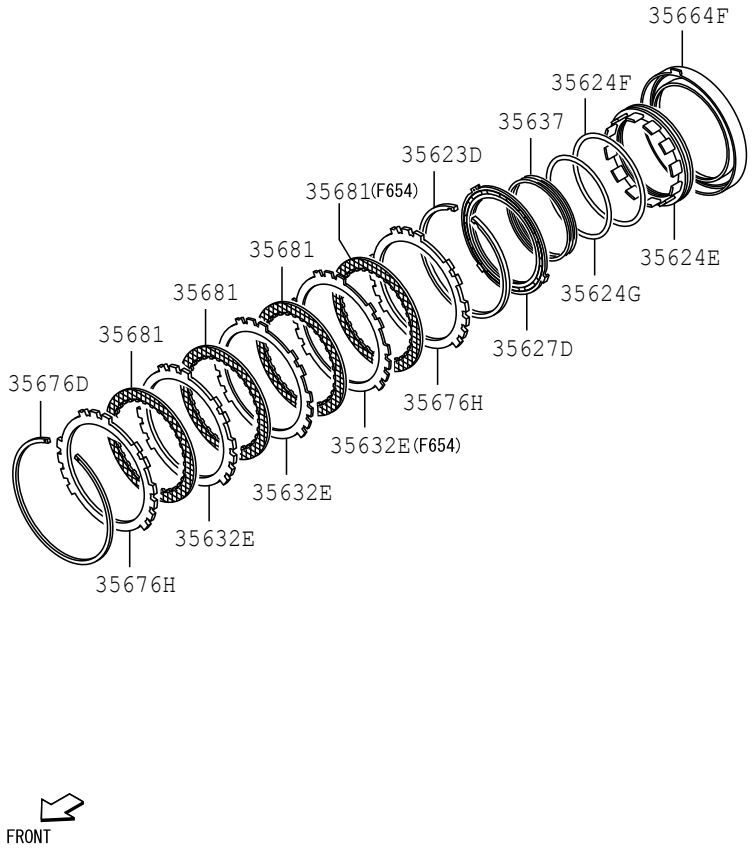

3509

35A330

FIG.35-09 BRAKE NO.3, 1ST & REVERSE BRAKE (ATM)

PROD_DATE	MODELS	SPEC CODE	DESCRIPTION	R/P	PART NUMBER	QYT	REV_REF FR	REV_REF TO
	+----------+							
	| 35623D | RING, SHAFT SNAP (FOR BRAKE)							
	+----------+							
1111 - 1507	F651..E4AT				90045-21185-	1		
1507 - 1901	F653..E4AT				90045-21185-	1		
1901 -	F65#..E4AT				90045-21185-	1		
	+----------+							
	| 35624E | PISTON, 2ND BRAKE							
	+----------+							
1111 - 1507	F651..E4AT				35624-97201-	1		
1507 - 1901	F653..E4AT				35624-97201-	1		
1901 -	F653..E4AT				35624-97201-	1		
1901 -	F654..E4AT				35624-97206-	1		
	+----------+							
	| 35624F | RING, O (FOR 2ND BRAKE PISTON)							
	+----------+							
1111 - 1507	F651..E4AT				90043-01295-	1		
1507 - 1901	F653..E4AT				90043-01295-	1		
1901 -	F65#..E4AT				90043-01295-	1		
	+----------+							
	| 35624G | RING, O (FOR 2ND BRAKE PISTON)							
	+----------+							
1111 - 1507	F651..E4AT				90043-01296-	1		
1507 - 1901	F653..E4AT				90043-01296-	1		
1901 -	F65#..E4AT				90043-01296-	1		
	+----------+							
	| 35627D | SEAT, BRAKE RETURN SPRING							
	+----------+							
1111 - 1507	F651..E4AT				35627-97202-	1		
1507 - 1901	F653..E4AT				35627-97202-	1		
1901 -	F65#..E4AT				35627-97202-	1		
	+----------+							
	| 35632E | PLATE, BRAKE							
	+----------+							
1111 - 1507	F651..E4AT				35632-97201-	2		
1507 - 1901	F653..E4AT				35632-97201-	2		

PROD_DATE	MODELS	SPEC CODE	DESCRIPTION	R/P	PART NUMBER	QYT	REV_REF FR	REV_REF TO
	+----------+							
	| 35632E | PLATE, BRAKE							
	CONTINUED--+							
1901 -	F653..E4AT				35632-97201-	2		
1901 -	F654..E4AT				35632-97201-	3		
	+----------+							
	| 35637 | SPRING, 2ND & 4TH BRAKE PISTON RETURN							
	+----------+							
1111 - 1507	F651..E4AT				35637-97201-	1		
1507 - 1901	F653..E4AT				35637-97201-	1		
1901 -	F65#..E4AT				35637-97201-	1		
	+----------+							
	| 35664F | CYLINDER, 2ND & 4TH BRAKE							
	+----------+							
1111 - 1507	F651..E4AT				35664-97205-	1		
1507 - 1901	F653..E4AT				35664-97205-	1		
1901 -	F65#..E4AT				35664-97205-	1		
	+----------+							
	| 35676D | RING, HOLE SNAP (FOR 1ST & REVERSE BRAKE FLANGE)							
	+----------+							
1111 - 1507	F651..E4AT		T=1.20		90045-21176-	1		
1111 - 1507	F651..E4AT		T=1.75		90045-21177-	1		
1111 - 1507	F651..E4AT		T=2.00		90045-21178-	1		
1111 - 1507	F651..E4AT		T=2.25		90045-21179-	1		
1507 - 1901	F653..E4AT		T=1.20		90045-21176-	1		
1507 - 1901	F653..E4AT		T=1.75		90045-21177-	1		
1507 - 1901	F653..E4AT		T=2.00		90045-21178-	1		
1507 - 1901	F653..E4AT		T=2.25		90045-21179-	1		
1901 -	F65#..E4AT		T=1.20		90045-21176-	1		
1901 -	F65#..E4AT		T=1.75		90045-21177-	1		
1901 -	F65#..E4AT		T=2.00		90045-21178-	1		
1901 -	F65#..E4AT		T=2.25		90045-21179-	1		

FIG.35-09 BRAKE NO.3, 1ST & REVERSE BRAKE (ATM)

PROD_DATE	MODELS	SPEC CODE	DESCRIPTION	R/P	PART NUMBER	QYT	REV_REF FR	REV_REF TO
	+----------+							
	| 35676H | FLANGE, BRAKE, NO.1							
	+----------+							
1111 - 1507	F651..E4AT				35676-97202-	2		
1507 - 1901	F653..E4AT				35676-97202-	2		
1901 -	F65#..E4AT				35676-97202-	2		
	+----------+							
	| 35681 | DISC, BRAKE, NO.1							
	+----------+							
1111 - 1507	F651..E4AT				35681-97201-	3		
1507 - 1901	F653..E4AT				35681-97201-	3		
1901 -	F653..E4AT				35681-97201-	3		
1901 -	F654..E4AT				35681-97201-	4		

FIG.35-10 PLANETARY GEAR, REVERSE PISTON & COUNTER GEAR(ATM)

(1111-)E4AT

A4Q-D1

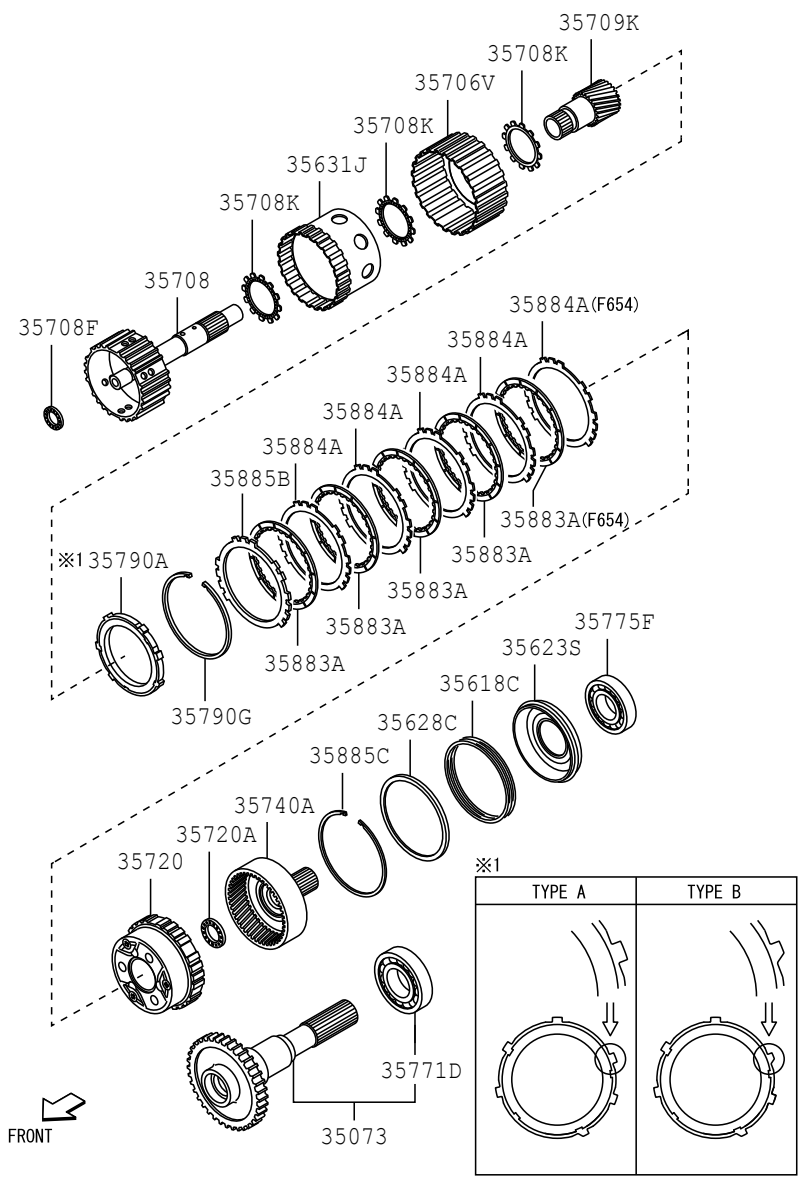

FIG.35-10 PLANETARY GEAR, REVERSE PISTON & COUNTER GEAR(ATM)

PROD_DATE	MODELS	SPEC CODE	DESCRIPTION	R/P	PART NUMBER	QYT	REV_REF FR	REV_REF TO
	35073	SHAFT SUB-ASSY, OUTPUT						
1111 - 1507	F651..E4AT				35073-B9010-	1		
1507 - 1901	F653..E4AT				35073-B9010-	1		
1901 -	F65#..E4AT				35073-B9010-	1		
	35618C	RETURN SPRING SUB-ASSY, 1ST & REVERSE						
1111 - 1507	F651..E4AT				35618-B1010-	1		
1507 - 1901	F653..E4AT				35618-B1010-	1		
1901 -	F65#..E4AT				35618-B1010-	1		
	35623S	PISTON,1ST & REVERSE BRAKE						
1111 - 1507	F651..E4AT				35623-B1020-	1		
1507 - 1901	F653..E4AT				35623-B1020-	1		
1901 -	F654..E4AT				35623-B1010-	1		
1901 -	F653..E4AT				35623-B1020-	1		
	35628C	SEAT, 1ST & REVERSE BRAKE PISTON RETURN SPRING						
1111 - 1507	F651..E4AT				35628-97202-	1		
1507 - 1901	F653..E4AT				35628-97202-	1		
1901 -	F65#..E4AT				35628-97202-	1		
	35631J	HUB, FORWARD CLUTCH, NO.1						
1111 - 1312	F651..E4AT				35631-97203-	1		
				#	(35631-B1010-)	1		
1401 - 1507	F651..E4AT				35631-B1010-	1		
1507 - 1901	F653..E4AT				35631-B1010-	1		
1901 -	F65#..E4AT				35631-B1010-	1		
	35706V	GEAR SUB ASSY, PLANETARY SUN						
1111 - 1507	F651..E4AT				35706-97203-	1		

PROD_DATE	MODELS	SPEC CODE	DESCRIPTION	R/P	PART NUMBER	QYT	REV_REF FR	REV_REF TO
	+----------+							
	| 35706V | GEAR SUB ASSY, PLANETARY SUN							
	CONTINUED--+							
1507 - 1901	F653..E4AT				35706-97203-	1		
1901 -	F65#..E4AT				35706-97203-	1		
	+----------+							
	| 35708 | SHAFT SUB-ASSY, INTERMEDIATE							
	+----------+							
1111 - 1507	F651..E4AT				35708-97203-	1		
1507 - 1901	F653..E4AT				35708-97203-	1		
1901 -	F65#..E4AT				35708-97203-	1		
	+----------+							
	| 35708F | BEARING, THRUST NEEDLE ROLLER (FOR INTERMEDIATE SHAFT)							
	+----------+							
1111 - 1507	F651..E4AT				90043-74051-	1		
1507 - 1901	F653..E4AT				90043-74051-	1		
1901 -	F65#..E4AT				90043-74051-	1		
	+----------+							
	| 35708K | BEARING, NEEDLE ROLLER(FOR INTERMEDIATE SHAFT)							
	+----------+							
1111 - 1507	F651..E4AT				90043-74047-	3		
1507 - 1901	F653..E4AT				90043-74047-	3		
1901 -	F65#..E4AT				90043-74047-	3		
	+----------+							
	| 35709K | GEAR SUB-ASSY, REAR PLANETARY							
	+----------+							
1111 - 1507	F651..E4AT				35709-97204-	1		
1507 - 1901	F653..E4AT				35709-97204-	1		
1901 -	F65#..E4AT				35709-97204-	1		
	+----------+							
	| 35720 | GEAR ASSY, FRONT PLANETARY							
	+----------+							
1111 - 1507	F651..E4AT				35720-97211-	1		
1507 - 1901	F653..E4AT				35720-97211-	1		
1901 -	F65#..E4AT				35720-97211-	1		

FIG.35-10 PLANETARY GEAR, REVERSE PISTON & COUNTER GEAR(ATM)

PROD_DATE	MODELS	SPEC CODE	DESCRIPTION	R/P	PART NUMBER	QYT	REV_REF FR	REV_REF TO
	+----------+							
	| 35720A | BEARING, THRUST NEEDLE ROLLER (FOR FRONT PLANETARY GEAR)							
	+----------+							
1111 - 1507	F651..E4AT				90043-74043-	1		
1507 - 1901	F653..E4AT				90043-74043-	1		
1901 -	F65#..E4AT				90043-74043-	1		
	+----------+							
	| 35740A | GEAR ASSY,FRONT PLANETARY RING							
	+----------+							
1111 - 1507	F651..E4AT				35740-97201-	1		
1507 - 1901	F653..E4AT				35740-97201-	1		
1901 -	F65#..E4AT				35740-97201-	1		
	+----------+							
	| 35771D | BALL BEARING, OUTPUT SHAFT							
	+----------+							
1111 - 1507	F651..E4AT				90043-63277-	1		
1507 - 1901	F653..E4AT				90043-63277-	1		
1901 -	F65#..E4AT				90043-63277-	1		
	+----------+							
	| 35775F | BEARING, RADIAL BOLL							
	+----------+							
1111 - 1507	F651..E4AT				90043-63273-	1		
1507 - 1901	F653..E4AT				90043-63273-	1		
1901 -	F65#..E4AT				90043-63273-	1		
	+----------+							
	| 35790A | CLUTCH ASSY, 1 WAY							
	+----------+							
1111 - 1401	F651..E4AT				35790-97201-	1		
				#	(35790-B1050-)	1		
1402 - 1408	F651..E4AT		TYPE A		35790-B1030-	1		
				#	(35790-B1050-)	1		
1408 - 1507	F651..E4AT		TYPE B		35790-B1050-	1		
1507 - 1901	F653..E4AT		TYPE B		35790-B1050-	1		
1901 -	F65#..E4AT		TYPE B		35790-B1050-	1		

PROD_DATE	MODELS	SPEC CODE	DESCRIPTION	R/P	PART NUMBER	QYT	REV_REF FR	REV_REF TO
	+----------+							
	| 35790G | HOLE SNAP RING (FOR 1WAY CLUTCH)							
	+----------+							
1111 - 1507	F651..E4AT				90045-21174-	1		
1507 - 1901	F653..E4AT				90045-21174-	1		
1901 -	F65#..E4AT				90045-21174-	1		
	+----------+							
	| 35883A | DISC, BRAKE							
	+----------+							
1111 - 1209	F651..E4AT				35883-97204-	4		
				#	(35883-B1030-)	1		
1210 - 1507	F651..E4AT				35883-B1010-	4		
				#	(35883-B1030-)	1		
1507 - 1706	F653..E4AT				35883-B1020-	4		
				#	(35883-B5010-)	1		
1707 - 1901	F653..E4AT				35883-B5010-	4		
1901 -	F653..E4AT				35883-B5010-	4		
1901 -	F654..E4AT				35883-B5010-	5		
	+----------+							
	| 35884A | PLATE,BRAKE							
	+----------+							
1111 - 1507	F651..E4AT				35884-97204-	4		
1507 - 1901	F653..E4AT				35884-B1010-	4		
1901 -	F653..E4AT				35884-B1010-	4		
1901 -	F654..E4AT				35884-B1010-	5		
	+----------+							
	| 35885B | FLANGE, BRAK							
	+----------+ E							
1111 - 1507	F651..E4AT		T=4.0		35885-97213-	1		
1111 - 1507	F651..E4AT		T=4.2		35885-97214-	1		
1111 - 1507	F651..E4AT		T=4.4		35885-97215-	1		
1111 - 1507	F651..E4AT		T=4.6		35885-97216-	1		
1111 - 1507	F651..E4AT		T=4.8		35885-97217-	1		
1111 - 1507	F651..E4AT		T=5.0		35885-97218-	1		
1507 - 1901	F653..E4AT		T=4.0		35885-B1010-	1		

FIG.35-10 PLANETARY GEAR, REVERSE PISTON & COUNTER GEAR(ATM)

PROD_DATE	MODELS	SPEC CODE	DESCRIPTION	R/P	PART NUMBER	QYT	REV_REF FR	REV_REF TO
	+----------+							
	| 35885B | FLANGE, BRAK							
	CONTINUED--+ E							
1507 - 1901	F653..E4AT		T=4.2		35885-B1020-	1		
1507 - 1901	F653..E4AT		T=4.4		35885-B1030-	1		
1507 - 1901	F653..E4AT		T=4.6		35885-B1040-	1		
1507 - 1901	F653..E4AT		T=4.8		35885-B1050-	1		
1507 - 1901	F653..E4AT		T=5.0		35885-B1060-	1		
1901 -	F65#..E4AT		T=4.0		35885-B1010-	1		
1901 -	F65#..E4AT		T=4.2		35885-B1020-	1		
1901 -	F65#..E4AT		T=4.4		35885-B1030-	1		
1901 -	F65#..E4AT		T=4.6		35885-B1040-	1		
1901 -	F65#..E4AT		T=4.8		35885-B1050-	1		
1901 -	F65#..E4AT		T=5.0		35885-B1060-	1		
	+----------+							
	| 35885C | RING,HOLE SNAP (FOR CLUTCH PLATE)							
	+----------+							
1111 - 1304	F651..E4AT				90045-21175-	1		
				#	(90045-21194-)	1		
1305 - 1507	F651..E4AT				90045-21194-	1		
1507 - 1901	F653..E4AT				90045-21194-	1		
1901 -	F65#..E4AT				90045-21194-	1		

FIG.35-12 VALVE BODY & OIL STRAINER (ATM)

(1111-1507)E4AT

A4Q-D1

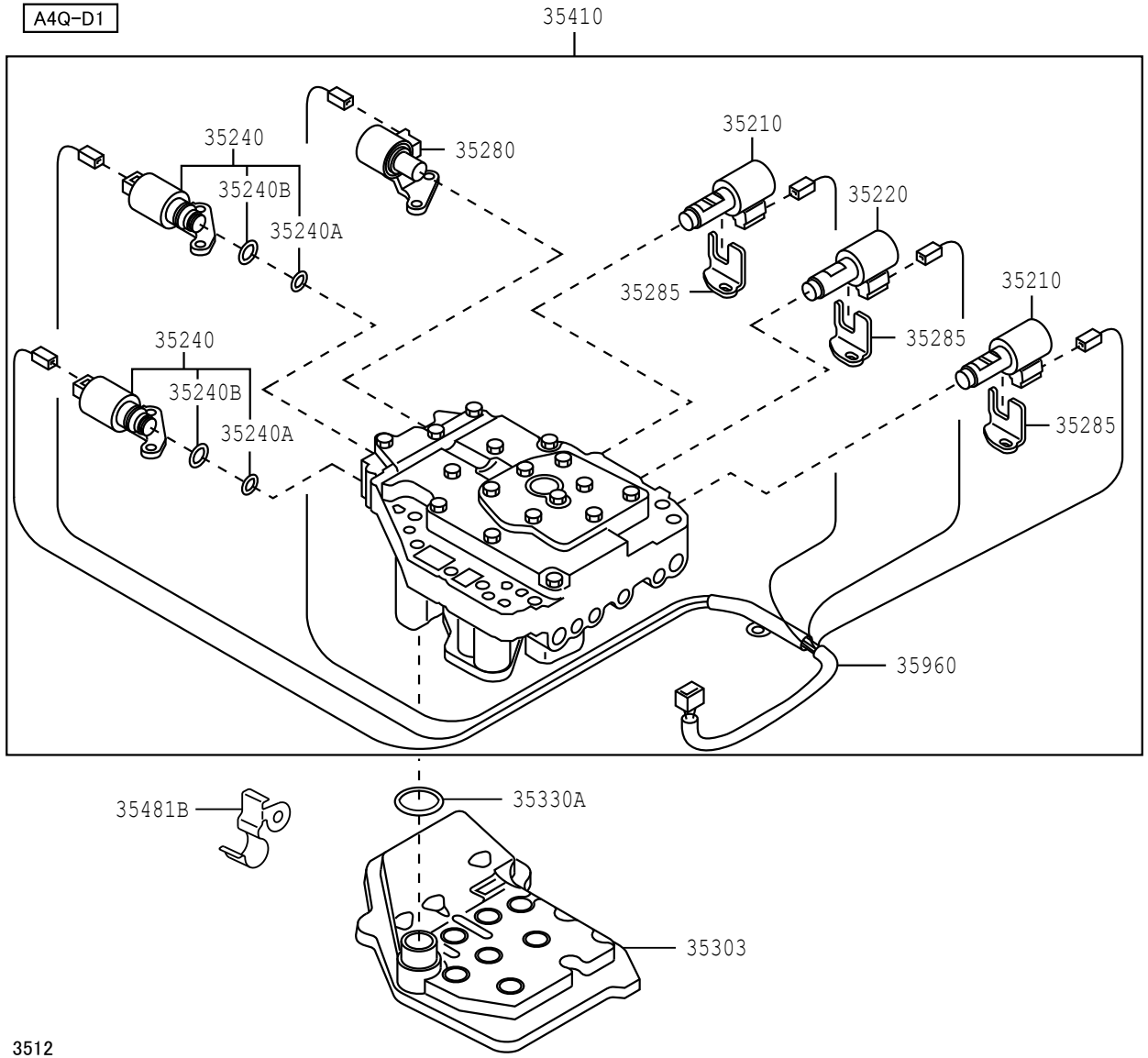

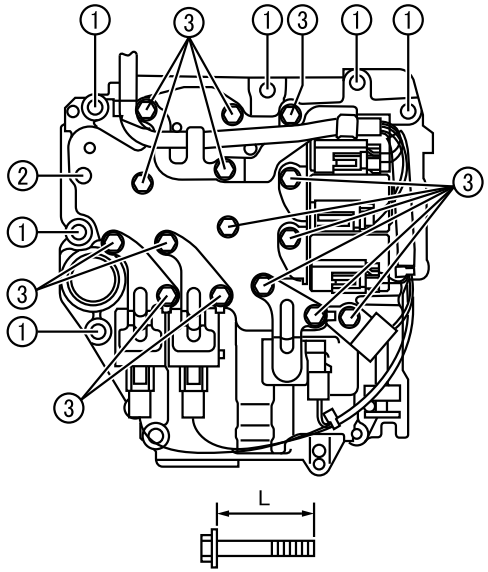

	PART NO.	L	QTY
①	90041-20006	35	6
②	90041-20007	65	1
③	※1 90041-05269	12	15

※1 90041-05269 is included in PNC 35410

3512

358122-A

FIG.35-12 VALVE BODY & OIL STRAINER (ATM)

(1507-)E4AT

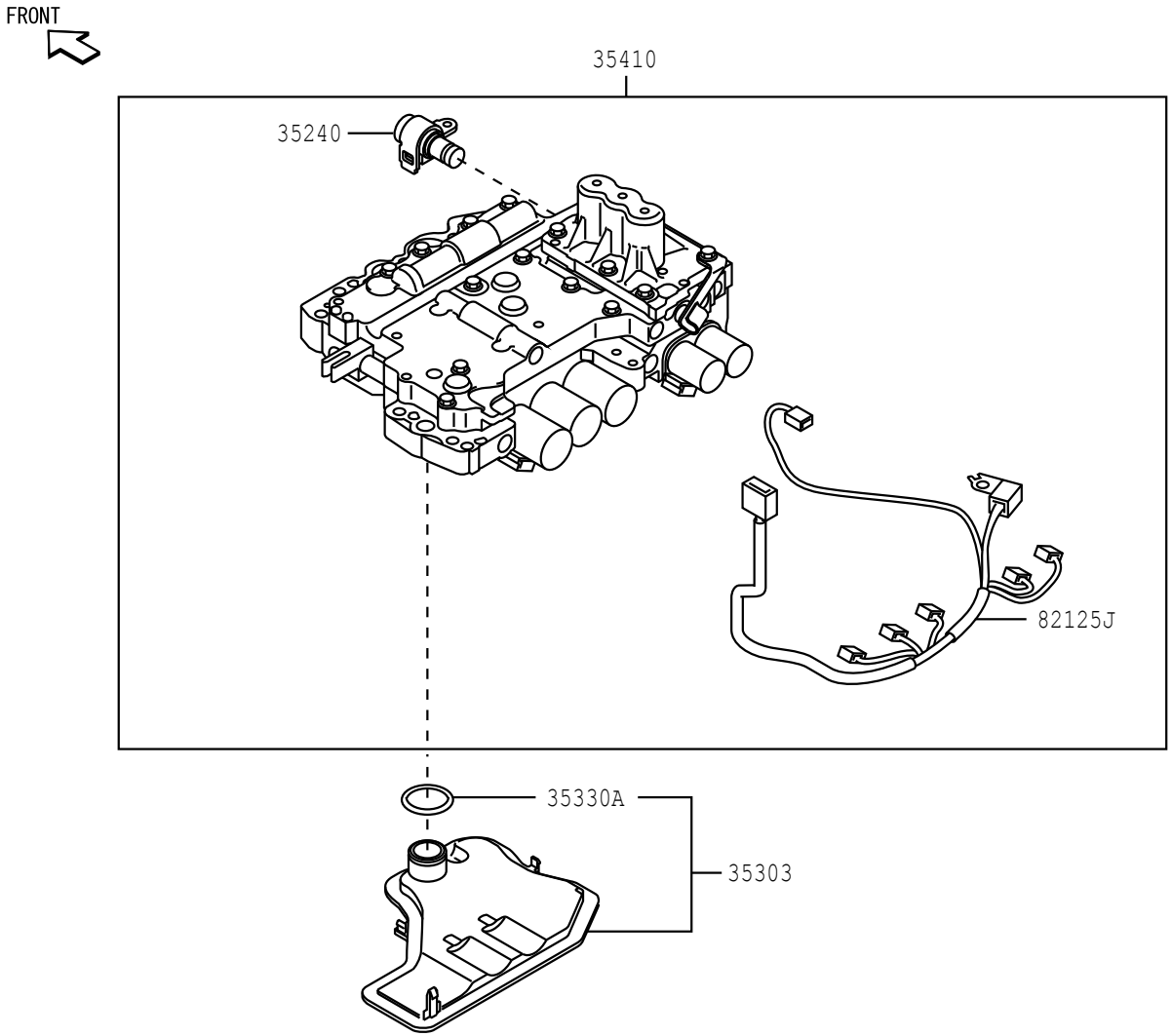

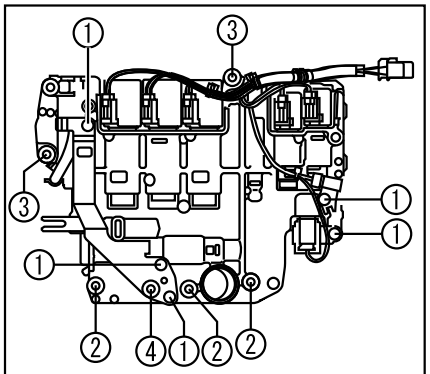

①	Ⓑ— ※1 90041-05269(5)
②	Ⓑ— 90041-20248(3)
③	Ⓑ— 90041-05410(2)
④	Ⓑ— 90041-05454

※1 90041-05269 is included in PNC 35410

3512

359353-A

PROD_DATE	MODELS	SPEC CODE	DESCRIPTION	R/P	PART NUMBER	QYT	REV_REF FR	REV_REF TO
	35210		SOLENOID ASSY, CLUTCH CONTROL, NO.1					
1111 - 1507	F651..E4AT				35210-97201-	2		
	35220		SOLENOID ASSY, CLUTCH CONTROL, NO.2					
1111 - 1507	F651..E4AT				35220-97201-	1		
	35240		SOLENOID ASSY, AUTOMATIC TRANSMISSION 3WAY					
1111 - 1205	F651..E4AT				35240-97201-	2		
				#	(35240-B1010-)	1		
1206 - 1507	F651..E4AT				35240-B1010-	2		
1507 - 1901	F653..E4AT				35240-B1020-	1		
1901 -	F65#..E4AT				35240-B1020-	1		
	35240A		RING, O, NO.1 (FOR TRANSMISSION 3WAY SOLENOID)					
1111 - 1507	F651..E4AT				90043-01279-	2		
	35240B		RING, O, NO.2 (FOR TRANSMISSION 3WAY SOLENOID)					
1111 - 1507	F651..E4AT				90043-01280-	2		
	35280		SOLENOID ASSY, LOCK UP CONTROL					
1111 - 1507	F651..E4AT				35280-97201-	1		
	35285		PLATE, SOLENOID LOCK					
1111 - 1507	F651..E4AT				35285-97201-	3		
	35303		STRAINER SUB-ASSY, OIL					
1111 - 1507	F651..E4AT				35303-97501-	1		
1507 - 1901	F653..E4AT				35303-B1010-	1		
1901 -	F65#..E4AT				35303-B1010-	1		

FIG.35-12 VALVE BODY & OIL STRAINER (ATM)

PROD_DATE	MODELS	SPEC CODE	DESCRIPTION	R/P	PART NUMBER	QYT	REV_REF FR	REV_REF TO
	35330A		RING, O (FOR OIL STRAINER)					
1111 - 1301	F651..E4AT				96721-24021-	1		
1302 - 1507	F651..E4AT				90043-01364-	1		
1507 - 1901	F653..E4AT				90043-01364-	1		
1901 -	F65#..E4AT				90043-01364-	1		
	35410		BODY ASSY, TRANSMISSION VALVE					
1111 - 1507	F651..E4AT				35410-97206-	1		
1507 - 1901	F653..E4AT				35410-B1060-	1		
				#	(35410-B1061-)	1		
1901 - 1905	F65#..E4AT				35410-B1060-	1		
				#	(35410-B1061-)	1		
1906 -	F65#..E4AT				35410-B1061-	1		
	35481B		CLAMP, VALVE BODY WIRE HARNESS					
1111 - 1507	F651..E4AT				35481-97501-	1		
	35960		WIRE, SOLENOID					
1111 - 1507	F651..E4AT				35960-97203-	1		
	82125J		WIRE, TRANSMISSION					
1507 - 1901	F653..E4AT				82125-B1050-	1		
1901 -	F65#..E4AT				82125-B1050-	1		

FIG. 35-13 THROTTLE LINK & VALVE LEVER (ATM)

(1111-1507)E4AT

A4Q-D1

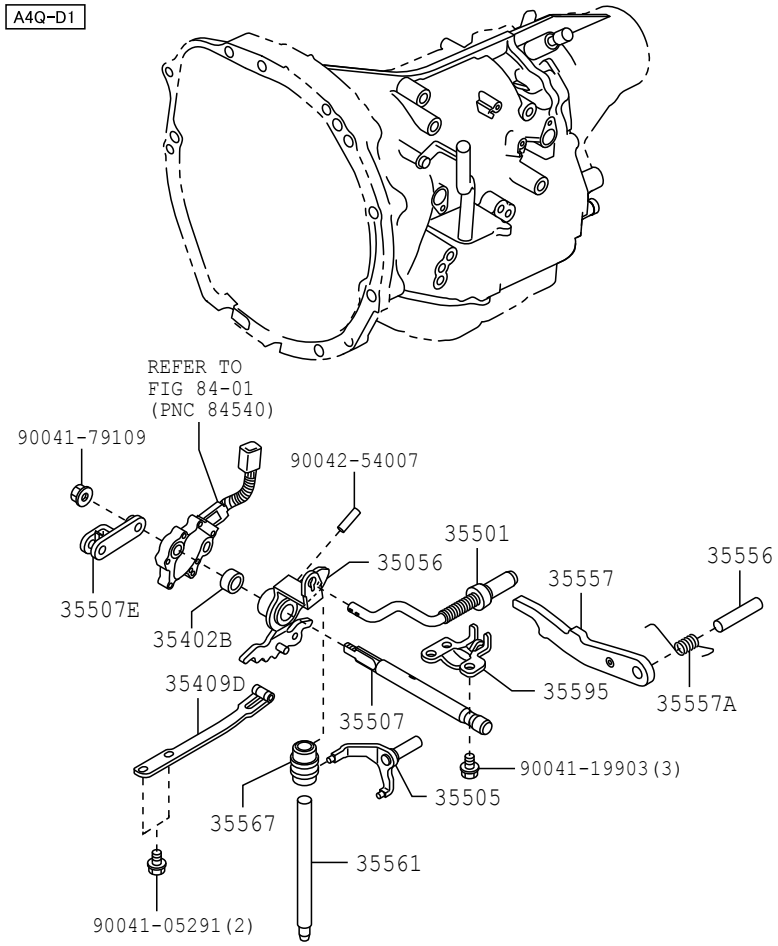

3513

358197-A

FIG. 35-13 THROTTLE LINK & VALVE LEVER (ATM)

(1507-)E4AT

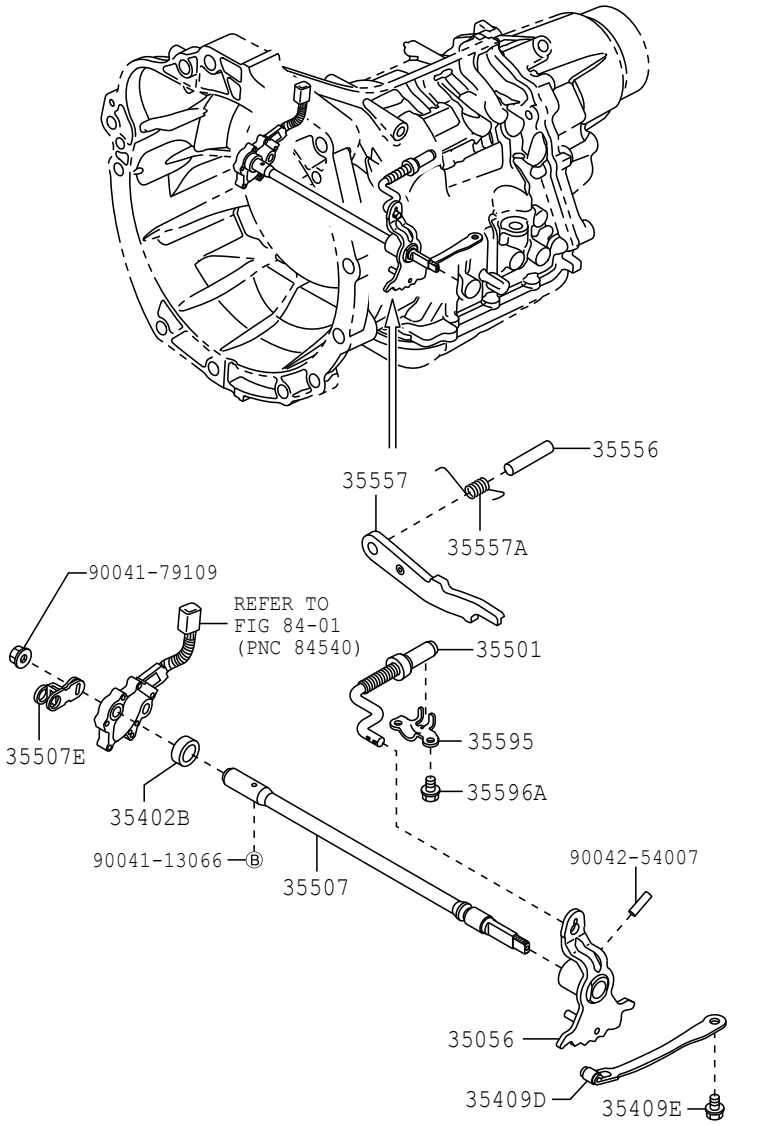

3513

359360

PROD_DATE	MODELS	SPEC CODE	DESCRIPTION	R/P	PART NUMBER	QYT	REV_REF FR	REV_REF TO
	35056		LEVER SUB-ASSY, PARKING LOCK W/ROLLER					
1111 - 1507	F651..E4AT				35057-97501-	1		
1507 - 1901	F653..E4AT				35057-B1010-	1		
1901 -	F65#..E4AT				35057-B1010-	1		
	35402B		SEAL,OIL(FOR MANUAL VALVE)					
1111 - 1507	F651..E4AT				90043-11256-	1		
1507 - 1901	F653..E4AT				90043-11256-	1		
1901 -	F65#..E4AT				90043-11256-	1		
	35409D		SPRING SUB-ASSY, MANUAL DETENT					
1111 - 1507	F651..E4AT				35409-97501-	1		
1507 - 1901	F653..E4AT				35409-B1020-	1		
1901 -	F65#..E4AT				35409-B1020-	1		
	35409E		BOLT(FOR MANUAL DETENT SPRING)					
1507 - 1901	F653..E4AT				90041-05511-	1		
1901 -	F65#..E4AT				90041-05511-	1		
	35501		ROD SUB-ASSY, PARKING LOCK					
1111 - 1507	F651..E4AT				35501-97501-	1		
1507 - 1509	F653..E4AT				35501-B1020-	1		
				#	(35501-B5010-)	1		
1510 - 1604	F653..E4AT				35501-B1021-	1		
				#	(35501-B5010-)	1		
1605 - 1901	F653..E4AT				35501-B5010-	1		
1901 -	F65#..E4AT				35501-B5010-	1		
	35505		LEVER SUB-ASSY, MANUAL VALVE					
1111 - 1507	F651..E4AT				35505-97501-	1		

FIG.35-13 THROTTLE LINK & VALVE LEVER (ATM)

PROD_DATE	MODELS	SPEC CODE	DESCRIPTION	R/P	PART NUMBER	QYT	REV_REF FR	REV_REF TO
	35507		SHAFT SUB-ASSY, TRANSMISSION CONTROL INTERMEDIATE					
1111 - 1507	F651..E4AT				35511-97501-	1		
1507 - 1901	F653..E4AT				33511-B1010-	1		
1901 -	F65#..E4AT				33511-B1010-	1		
	35507E		LEVER,TRANSMISSION CONTROL SHAFT					
1111 - 1507	F651..E4AT				35507-87402-	1		
1507 - 1901	F653..E4AT				35507-87402-	1		
1901 -	F65#..E4AT				35507-87402-	1		
	35556		SHAFT, PARKING LOCK PAWL					
1111 - 1507	F651..E4AT				35556-87502-	1		
1507 - 1901	F653..E4AT				35556-87502-	1		
1901 -	F65#..E4AT				35556-87502-	1		
	35557		PAWL, PARKING LOCK					
1111 - 1507	F651..E4AT				35557-B0010-	1		
1507 - 1901	F653..E4AT				35557-B1020-	1		
1901 - 2003	F65#..E4AT				35557-B1020-	1		
2004 -	F65#..E4AT				35557-B1030-	1		
	35557A		SPRING, TORSION (FOR PARKING LOCK PAWL)					
1111 - 1507	F651..E4AT				90045-08388-	1		
1507 - 1901	F653..E4AT				90045-08419-	1		
1901 -	F65#..E4AT				90045-08419-	1		
	35561		SHAFT, MANUAL VALVE LEVER					
1111 - 1507	F651..E4AT				35568-97501-	1		

FIG.35-13 THROTTLE LINK & VALVE LEVER (ATM)

PROD_DATE	MODELS	SPEC CODE	DESCRIPTION	R/P	PART NUMBER	QYT	REV_REF FR	REV_REF TO
	+----------+							
	| 35567 | ROD, TRANSMISSION CONTROL, 3RD							
	+----------+							
1111 - 1507	F651..E4AT				35567-97501-	1		
	+----------+							
	| 35595 | BRACKET, PARKING LOCK PAWL							
	+----------+							
1111 - 1507	F651..E4AT				35595-97501-	1		
1507 - 1901	F653..E4AT				35595-B1020-	1		
1901 -	F65#..E4AT				35595-B1020-	1		
	+----------+							
	| 35596A | BOLT (FOR PAWL STOPPER PLATE)							
	+----------+							
1507 - 1901	F653..E4AT				90041-05412-	2		
1901 -	F65#..E4AT				90041-05412-	2		

FIG.35-14 OIL COOLER & TUBE (ATM)

(1507-)E4AT

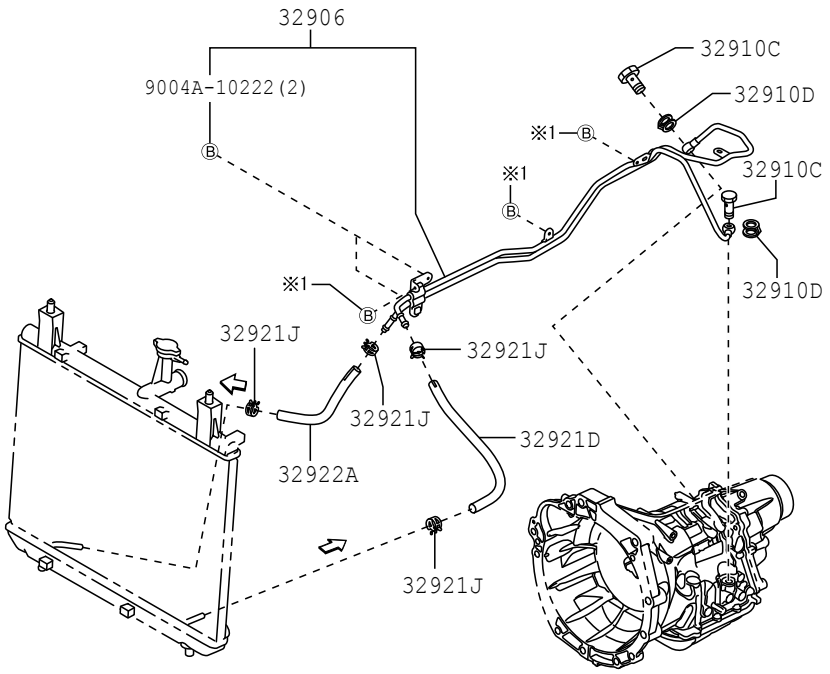

※1 91551-80614(-1611)
9004A-10168(1612-)

3514

359356-E

FIG.35-14 OIL COOLER & TUBE (ATM)

(1111-1507)E4AT

A4Q-D1

A4Q-D1

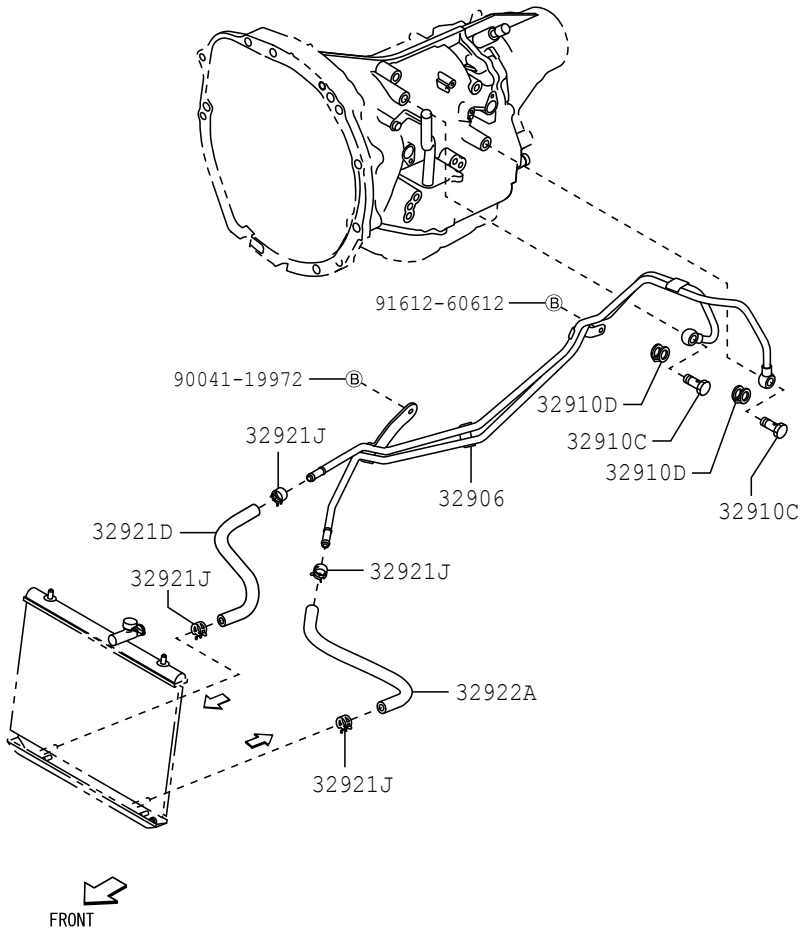

3514

35A080-A

PROD_DATE	MODELS	SPEC CODE	DESCRIPTION	R/P	PART NUMBER	QYT	REV_REF FR	REV_REF TO
	+----------+							
	| 32906 | TUBE SUB-ASSY, OIL COOLER							
	+----------+							
1111 - 1204	F651..E4AT				32909-BZ080-	1		
1205 - 1507	F651..E4AT				32909-BZ081-	1		
1507 - 1901	F653..E4AT				32909-BZ100-	1		
1901 -	F65#..E4AT				32909-BZ100-	1		
	+----------+							
	| 32910C | BOLT, UNION(FOR OIL COOLER)							
	+----------+							
1111 - 1507	F651..E4AT				90044-01081-	2		
1507 - 1901	F653..E4AT				90044-01081-	2		
1901 -	F65#..E4AT				90044-01081-	2		
	+----------+							
	| 32910D | GASKET(FOR OIL COOLER)							
	+----------+							
1111 - 1507	F651..E4AT				90044-30302-	2		
1507 - 1711	F653..E4AT				90044-30302-	2		
1712 - 1901	F653..E4AT				9004A-43023-	2		
				#	(90044-30302-)	1		
1901 -	F65#..E4AT				9004A-43023-	2		
				#	(90044-30302-)	1		
	+----------+							
	| 32921D | HOSE(FOR OIL COOLER INLET)							
	+----------+							
1111 - 1507	F651..E4AT		L=345		32941-B0070-	1		
1507 - 1901	F653..E4AT		L=375		32941-B0020-	1		
1901 -	F65#..E4AT		L=375		32941-B0020-	1		
	+----------+							
	| 32921J | CLIP(FOR OIL COOLER HOSE)							
	+----------+							
1111 - 1507	F651..E4AT				90466-16002-	4		
1507 - 1901	F653..E4AT				90466-16002-	4		
1901 -	F65#..E4AT				90466-16002-	4		

FIG.35-14 OIL COOLER & TUBE (ATM)

PROD_DATE	MODELS	SPEC CODE	DESCRIPTION	R/P	PART NUMBER	QYT	REV_REF FR	REV_REF TO
	+----------+							
	| 32922A | HOSE(FOR OIL COOLER OUTLET)							
	+----------+							
1111 - 1507	F651..E4AT		L=490		32942-B0070-	1		
1507 - 1901	F653..E4AT		L=248		32942-B0040-	1		
1901 -	F65#..E4AT		L=248		32942-B0040-	1		

(1111-)

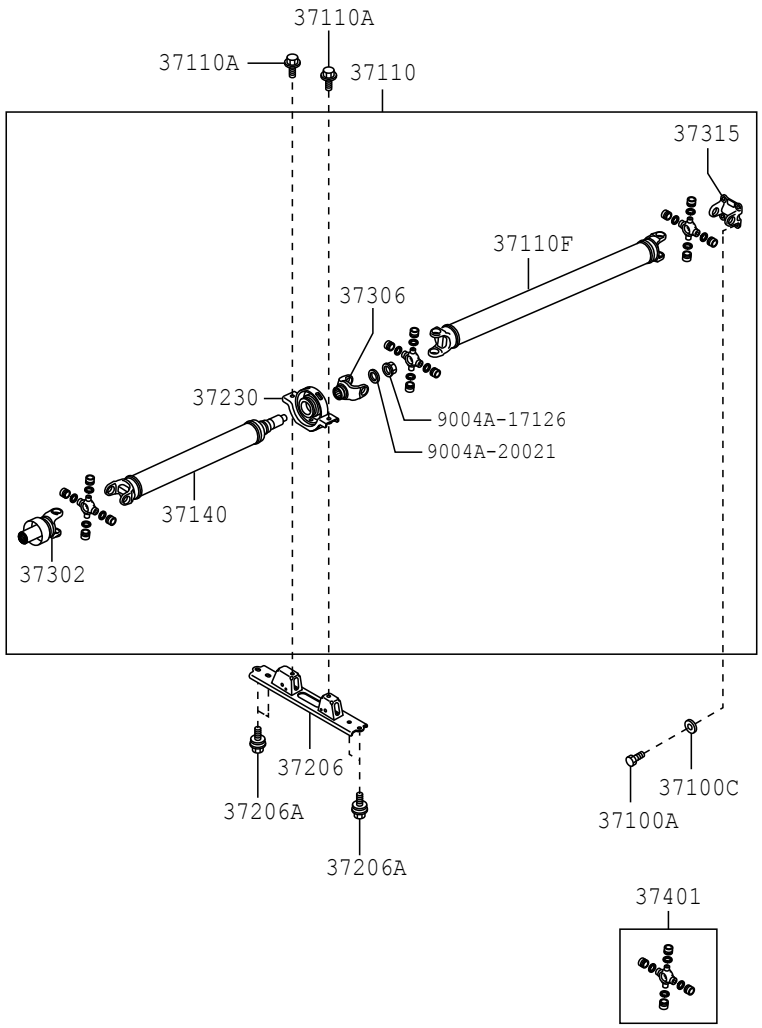

3701 370795-C

FIG.37-01 PROPELLER SHAFT & UNIVERSAL JOINT

PROD_DATE	MODELS	SPEC CODE	DESCRIPTION	R/P	PART NUMBER	QYT	REV_REF FR	REV_REF TO
	37100A BOLT, NO.1 (FOR PROPELLER SHAFT & DIFFERENTIAL SETTING)							
1111 - 1507	F65#				90041-01494-	4		
1507 - 1607	F650				90041-01494-	4		
1507 - 1901	F653				90041-01494-	4		
1901 -	F65#				90041-01494-	4		
	37100C WASHER, NO.1 (FOR PROPELLER SHAFT & DIFFERENTIAL SETTING)							
1111 - 1507	F65#				94512-01000-	4		
				#	(94512-01000-000)	1		
1507 - 1607	F650				94512-01000-	4		
				#	(94512-01000-000)	1		
1507 - 1901	F653				94512-01000-	4		
				#	(94512-01000-000)	1		
1901 -	F65#				94512-01000-	4		
				#	(94512-01000-000)	1		
	37110 SHAFT ASSY, PROPELLER							
1111 - 1507	F65#..5F				37110-BZ140-	1		
1111 - 1507	F651..E4AT				37110-BZ150-	1		
1507 - 1607	F650				37110-BZ130-	1		
1507 - 1901	F653..5F				37110-BZ130-	1		
1507 - 1901	F653..E4AT				37110-BZ160-	1		
1901 - 1905	F653..5F				37110-BZ130-	1		
1901 - 1905	F654				37110-BZ160-	1		
1901 - 1905	F653..E4AT				37110-BZ160-	1		
1906 -	F653..5F				37110-BZ131-	1		
1906 -	F654				37110-BZ161-	1		
1906 -	F653..E4AT				37110-BZ161-	1		

PROD_DATE	MODELS	SPEC CODE	DESCRIPTION	R/P	PART NUMBER	QYT	REV_REF FR	REV_REF TO
	+----------+							
	| 37110A | BOLT (FOR PROPELLER SHAFT)							
	+----------+							
1111 - 1507	F65#		*10-1.25PX25-25		91652-B1025-	2		
1507 - 1607	F650				9004A-10206-	2		
1507 - 1901	F653				9004A-10206-	2		
1901 -	F65#				9004A-10206-	2		
	+----------+							
	| 37110F | SHAFT ASSY, PROPELLER, REAR							
	+----------+							
1111 - 1507	F65#				37101-BZ040-	1		
1507 - 1607	F650				37101-BZ060-	1		
1507 - 1901	F653				37101-BZ060-	1		
1901 -	F65#				37101-BZ060-	1		
	+----------+							
	| 37140 | SHAFT ASSY, PROPELLER, FRONT							
	+----------+							
1111 - 1507	F65#				37104-BZ070-	1		
1507 - 1607	F650				37104-BZ100-	1		
1507 - 1901	F653				37104-BZ100-	1		
1901 -	F65#				37104-BZ100-	1		
	+----------+							
	| 37206 | BRACKET SUB-ASSY, CENTER SUPPORT BEARING							
	+----------+							
1111 - 1507	F65#				37231-BZ070-	1		
1507 - 1607	F650				37231-BZ080-	1		
1507 - 1901	F653				37231-BZ080-	1		
1901 -	F65#				37231-BZ080-	1		
	+----------+							
	| 37206A | BOLT, CENTER SUPPORT BEARING BRACKET							
	+----------+							
1111 - 1507	F65#		*10-1.25PX25-25		91652-B1025-	4		
1507 - 1607	F650				91672-81025-	4		
1507 - 1802	F653				91672-81025-	4		
1803 - 1901	F653				9004A-11360-	4		

FIG.37-01 PROPELLER SHAFT & UNIVERSAL JOINT

PROD_DATE	MODELS	SPEC CODE	DESCRIPTION	R/P	PART NUMBER	QYT	REV_REF FR	REV_REF TO
	+----------+							
	| 37206A | BOLT, CENTER SUPPORT BEARING BRACKET							
	CONTINUED--+							
1901 -	F65#				9004A-11360-	4		
	+----------+							
	| 37230 | BEARING ASSY, CENTER SUPPORT, NO.1							
	+----------+							
1111 - 1507	F65#				37230-BZ010-	1		
1507 - 1607	F650				37230-BZ040-	1		
1507 - 1901	F653				37230-BZ040-	1		
1901 -	F65#				37230-BZ040-	1		
	+----------+							
	| 37302 | YOKE SUB-ASSY, UNIVERSAL JOINT SLEEVE							
	+----------+							
1111 - 1507	F65#..5F				37302-BZ050-	1		
1111 - 1507	F651..E4AT				37302-BZ060-	1		
1507 - 1607	F650				37302-BZ050-	1		
1507 - 1901	F653..5F				37302-BZ050-	1		
1507 - 1901	F653..E4AT				37302-BZ060-	1		
1901 -	F653..5F				37302-BZ050-	1		
1901 -	F654				37302-BZ060-	1		
1901 -	F653..E4AT				37302-BZ060-	1		
	+----------+							
	| 37306 | YOKE SUB-ASSY, UNIVERSAL JOINT, CENTER							
	+----------+							
1111 - 1507	F65#				37306-BZ030-	1		
1507 - 1607	F650				37306-BZ030-	1		
1507 - 1901	F653				37306-BZ030-	1		
1901 -	F65#				37306-BZ030-	1		
	+----------+							
	| 37315 | YOKE, UNIVERSAL JOINT FLANGE							
	+----------+							
1111 - 1507	F65#				37315-BZ030-	1		
1507 - 1607	F650				37315-BZ030-	1		
1507 - 1901	F653				37315-BZ030-	1		

FIG.37-01 PROPELLER SHAFT & UNIVERSAL JOINT

PROD_DATE	MODELS	SPEC CODE	DESCRIPTION	R/P	PART NUMBER	QYT	REV_REF FR	REV_REF TO
	+----------+							
	| 37315 | YOKE, UNIVERSAL JOINT FLANGE							
	CONTINUED--+							
1901 -	F65#				37315-BZ030-	1		
	+----------+							
	| 37401 | SPIDER KIT, UNIVERSAL JOINT							
	+----------+							
1111 - 1507	F65#				04371-BZ040-	3		
1507 - 1607	F650				04371-BZ040-	3		
1507 - 1901	F653				04371-BZ040-	3		
1901 -	F65#				04371-BZ040-	3		

(1111-)

ILLUST NO. 2 OF 2

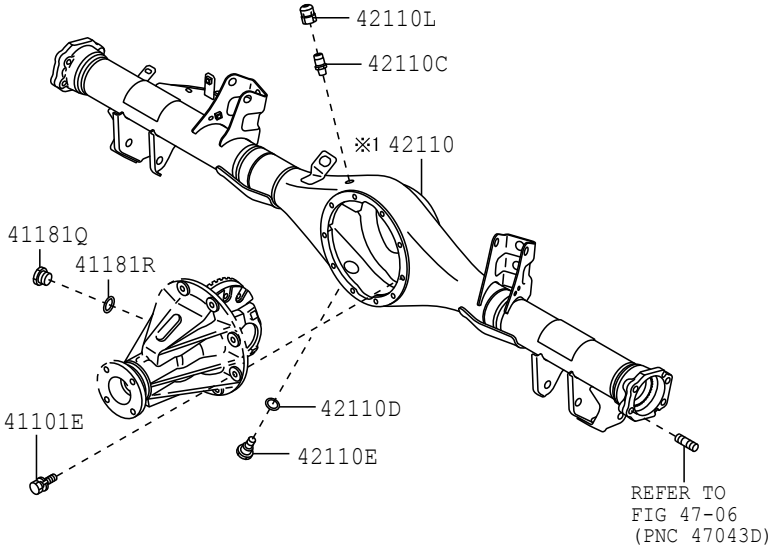

※1

TYPE A	TYPE B
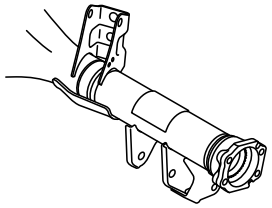	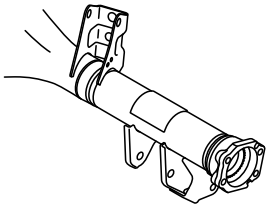

FIG.41-01 REAR AXLE HOUSING & DIFFERENTIAL

(1111-)

ILLUST NO. 1 OF 2

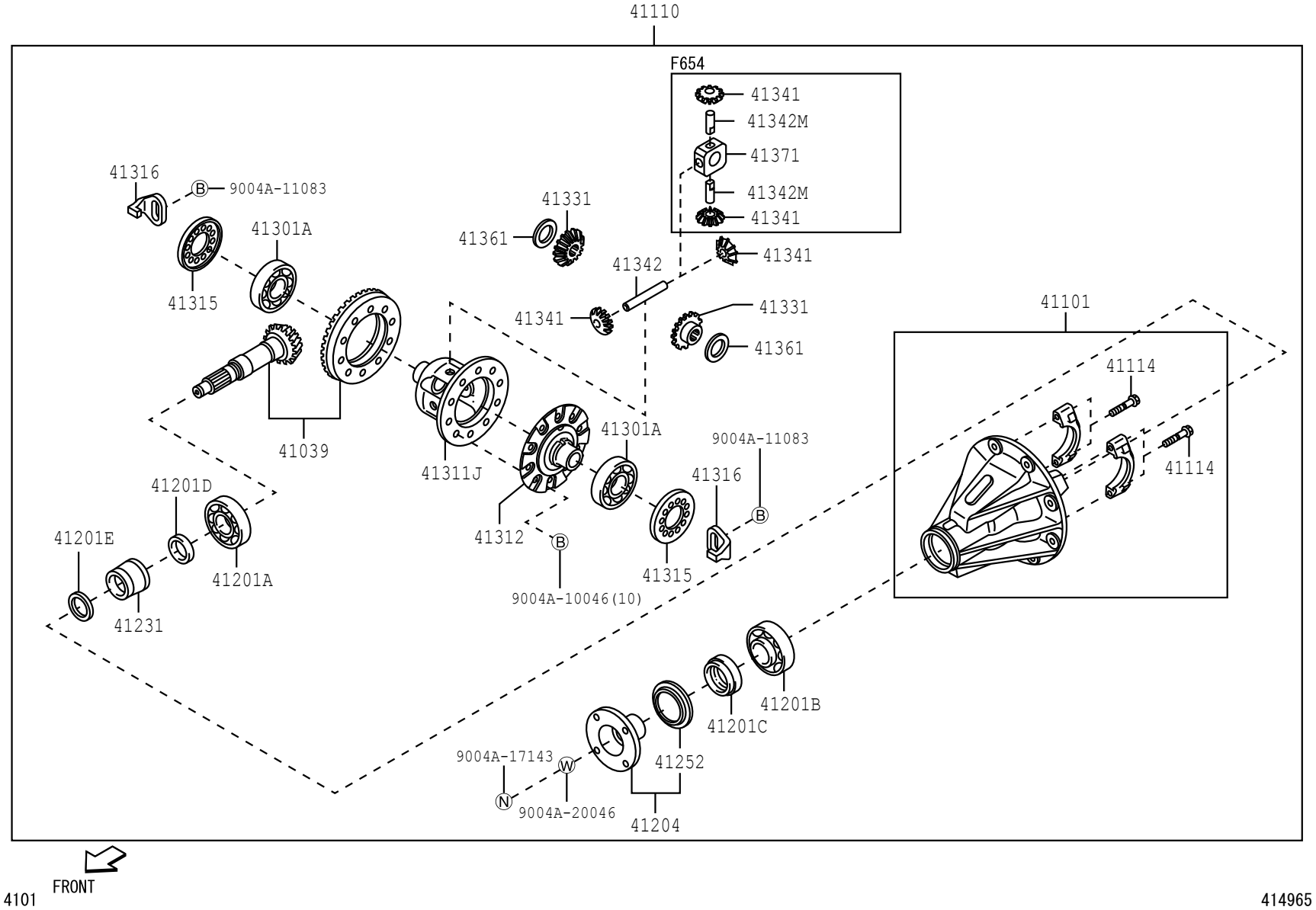

4101

414965

PROD_DATE	MODELS	SPEC CODE	DESCRIPTION	R/P	PART NUMBER	QYT	REV_REF FR	REV_REF TO
	+----------+							
	| 41039 | GEAR KIT, DIFFERENTIAL, REAR							
	+----------+							
1111 - 1507	F650				41039-BZ010-	1		
				#	(41039-B4020-)	1		
1111 - 1507	F651..E4AT				41039-BZ010-	1		
				#	(41039-B4020-)	1		
1111 - 1507	F651..5F				41039-BZ050-	1		
				#	(41039-B4010-)	1		
1507 - 1607	F650				41039-BZ240-	1		
1507 - 1901	F653..E4AT				41039-BZ240-	1		
1507 - 1901	F653..5F				41039-BZ260-	1		
1901 -	F653..E4AT				41039-BZ240-	1		
1901 -	F654..5F				41039-BZ250-	1		
1901 -	F653..5F				41039-BZ260-	1		
1901 -	F654..E4AT				41039-BZ260-	1		
	+----------+							
	| 41101 | CARRIER SUB-ASSY, DIFFERENTIAL, REAR							
	+----------+							
1111 - 1507	F65#				41101-BZ010-	1		
1507 - 1607	F650				41101-BZ021-	1		
1507 - 1901	F653				41101-BZ021-	1		
1901 -	F65#				41101-BZ021-	1		
	+----------+							
	| 41101E | BOLT (FOR REAR DIFFERENTIAL CARRIER)							
	+----------+							
1111 - 1507	F65#				90041-19291-	10		
1507 - 1607	F650		M8,L=22		90041-19291-	10		
1507 - 1711	F653		M8,L=22		90041-19291-	10		
1712 - 1901	F653		M8,L=22		90041-20039-	10		
1901 -	F65#		M8,L=22		90041-20039-	10		
	+----------+							
	| 41110 | CARRIER ASSY, DIFFERENTIAL, REAR							
	+----------+							
1111 - 1507	F651..5F				41110-BZ022-	1		

FIG.41-01 REAR AXLE HOUSING & DIFFERENTIAL

PROD_DATE	MODELS	SPEC CODE	DESCRIPTION	R/P	PART NUMBER	QYT	REV_REF FR	REV_REF TO
	+----------+							
	| 41110 | CARRIER ASSY, DIFFERENTIAL, REAR							
	CONTINUED--+							
1111 - 1507	F650		*FGR=39:7=5.571		41110-BZ200-	1		
1111 - 1507	F651..E4AT				41110-BZ220-	1		
1507 - 1607	F650				41110-BZ340-	1		
1507 - 1901	F653..5F				41110-BZ360-	1		
1507 - 1901	F653..E4AT				41110-BZ400-	1		
1901 - 1910	F654..E4AT				41110-BZ370-	1		
1901 - 1910	F654..5F				41110-BZ390-	1		
1901 -	F653..5F				41110-BZ360-	1		
1901 -	F653..E4AT				41110-BZ400-	1		
1911 -	F654..E4AT				41110-BZ371-	1		
1911 -	F654..5F				41110-BZ391-	1		
	+----------+							
	| 41114 | BOLT, REAR DIFFERENTIAL BEARING CAP							
	+----------+							
1111 - 1507	F65#				41114-BZ010-	4		
				#	(41114-87401-)	1		
1507 - 1607	F650				41114-BZ010-	4		
				#	(41114-87401-)	1		
1507 - 1901	F653				41114-BZ010-	4		
				#	(41114-87401-)	1		
1901 -	F65#				41114-BZ010-	4		
				#	(41114-87401-)	1		
	+----------+							
	| 41181Q | PLUG(FOR REAR DIFFERENTIAL CARRIER)							
	+----------+							
1111 - 1507	F65#				90043-41046-	1		
1507 - 1607	F650				90043-41046-	1		
1507 - 1901	F653				90043-41046-	1		
1901 -	F65#				90043-41046-	1		

PROD_DATE	MODELS	SPEC CODE	DESCRIPTION	R/P	PART NUMBER	QYT	REV_REF FR	REV_REF TO
	+----------+							
	| 41181R | GASKET(FOR REAR DIFFERENTIAL CARRIER PLUG							
	+----------+)							
1111 - 1507	F65#				90044-30237-	1		
1507 - 1607	F650				90044-30237-	1		
1507 - 1901	F653				90044-30237-	1		
1901 -	F65#				90044-30237-	1		
	+----------+							
	| 41201A | BEARING (FOR REAR DRIVE PINION REAR)							
	+----------+							
1111 - 1507	F65#				9004A-36085-	1		
				#	(90043-66078-)	1		
1507 - 1607	F650				9004A-36085-	1		
				#	(90043-66078-)	1		
1507 - 1901	F653				9004A-36085-	1		
				#	(90043-66078-)	1		
1901 -	F65#				9004A-36085-	1		
				#	(90043-66078-)	1		
	+----------+							
	| 41201B | BEARING (FOR REAR DRIVE PINION FRONT)							
	+----------+							
1111 - 1507	F65#				9004A-36089-	1		
				#	(90043-66080-)	1		
1507 - 1607	F650				9004A-36089-	1		
				#	(90043-66080-)	1		
1507 - 1901	F653				9004A-36089-	1		
				#	(90043-66080-)	1		
1901 -	F65#				9004A-36089-	1		
				#	(90043-66080-)	1		
	+----------+							
	| 41201C | SEAL, OIL (FOR REAR DIFFERENTIAL CARRIER)							
	+----------+							
1111 - 1507	F65#				9004A-31043-	1		
				#	(90043-11368-)	1		
1507 - 1607	F650				9004A-31043-	1		
				#	(90043-11368-)	1		
1507 - 1901	F653				9004A-31043-	1		
				#	(90043-11368-)	1		

FIG.41-01 REAR AXLE HOUSING & DIFFERENTIAL

PROD_DATE	MODELS	SPEC CODE	DESCRIPTION	R/P	PART NUMBER	QYT	REV_REF FR	REV_REF TO
	+----------+							
	| 41201C | SEAL, OIL (FOR REAR DIFFERENTIAL CARRIER)							
	CONTINUED--+							
1901 -	F65#				9004A-31043-	1		
				#	(90043-11368-)	1		
	+----------+							
	| 41201D | WASHER, PLATE (FOR REAR DIFFERENTIAL DRIVE PINION)							
	+----------+							
1111 - 1507	F65#		T=0.29		9004A-56051-	33		
				#	(90045-64585-)	1		
1111 - 1507	F65#		T=0.32		9004A-56052-	33		
				#	(90045-64586-)	1		
1111 - 1507	F65#		T=0.35		9004A-56053-	33		
				#	(90045-64587-)	1		
1111 - 1507	F65#		T=0.38		9004A-56054-	33		
				#	(90045-64588-)	1		
1111 - 1507	F65#		T=0.41		9004A-56055-	33		
				#	(90045-64589-)	1		
1111 - 1507	F65#		T=0.44		9004A-56056-	33		
				#	(90045-64590-)	1		
1111 - 1507	F65#		T=0.47		9004A-56057-	33		
				#	(90045-64591-)	1		
1111 - 1507	F65#		T=0.50		9004A-56058-	33		
				#	(90045-64592-)	1		
1111 - 1507	F65#		T=0.53		9004A-56059-	33		
				#	(90045-64593-)	1		
1111 - 1507	F65#		T=0.56		9004A-56060-	33		
				#	(90045-64594-)	1		
1111 - 1507	F65#		T=0.59		9004A-56061-	33		
				#	(90045-64595-)	1		
1111 - 1507	F65#		T=0.62		9004A-56062-	33		
				#	(90045-64596-)	1		
1111 - 1507	F65#		T=0.65		9004A-56063-	33		
				#	(90045-64597-)	1		
1507 - 1607	F650		T=0.29		9004A-56051-	33		
				#	(90045-64585-)	1		
1507 - 1607	F650		T=0.32		9004A-56052-	33		
				#	(90045-64586-)	1		

PROD_DATE	MODELS	SPEC CODE	DESCRIPTION	R/P	PART NUMBER	QYT	REV_REF FR	REV_REF TO
	+----------+							
	| 41201D | WASHER, PLATE (FOR REAR DIFFERENTIAL DRIVE PINION)							
	CONTINUED--+							
1507 - 1607	F650		T=0.35		9004A-56053-	33		
				#	(90045-64587-)	1		
1507 - 1607	F650		T=0.38		9004A-56054-	33		
				#	(90045-64588-)	1		
1507 - 1607	F650		T=0.41		9004A-56055-	33		
				#	(90045-64589-)	1		
1507 - 1607	F650		T=0.44		9004A-56056-	33		
				#	(90045-64590-)	1		
1507 - 1607	F650		T=0.47		9004A-56057-	33		
				#	(90045-64591-)	1		
1507 - 1607	F650		T=0.50		9004A-56058-	33		
				#	(90045-64592-)	1		
1507 - 1607	F650		T=0.53		9004A-56059-	33		
				#	(90045-64593-)	1		
1507 - 1607	F650		T=0.56		9004A-56060-	33		
				#	(90045-64594-)	1		
1507 - 1607	F650		T=0.59		9004A-56061-	33		
				#	(90045-64595-)	1		
1507 - 1607	F650		T=0.62		9004A-56062-	33		
				#	(90045-64596-)	1		
1507 - 1607	F650		T=0.65		9004A-56063-	33		
				#	(90045-64597-)	1		
1507 - 1901	F653		T=0.29		9004A-56051-	33		
				#	(90045-64585-)	1		
1507 - 1901	F653		T=0.32		9004A-56052-	33		
				#	(90045-64586-)	1		
1507 - 1901	F653		T=0.35		9004A-56053-	33		
				#	(90045-64587-)	1		
1507 - 1901	F653		T=0.38		9004A-56054-	33		
				#	(90045-64588-)	1		
1507 - 1901	F653		T=0.41		9004A-56055-	33		
				#	(90045-64589-)	1		
1507 - 1901	F653		T=0.44		9004A-56056-	33		
				#	(90045-64590-)	1		

FIG.41-01 REAR AXLE HOUSING & DIFFERENTIAL

PROD_DATE	MODELS	SPEC CODE	DESCRIPTION	R/P	PART NUMBER	QYT	REV_REF FR	REV_REF TO
	+----------+							
	| 41201D | WASHER, PLATE (FOR REAR DIFFERENTIAL DRIVE PINION)							
	CONTINUED--+							
1507 - 1901	F653		T=0.47		9004A-56057-	33		
				#	(90045-64591-)	1		
1507 - 1901	F653		T=0.50		9004A-56058-	33		
				#	(90045-64592-)	1		
1507 - 1901	F653		T=0.53		9004A-56059-	33		
				#	(90045-64593-)	1		
1507 - 1901	F653		T=0.56		9004A-56060-	33		
				#	(90045-64594-)	1		
1507 - 1901	F653		T=0.59		9004A-56061-	33		
				#	(90045-64595-)	1		
1507 - 1901	F653		T=0.62		9004A-56062-	33		
				#	(90045-64596-)	1		
1507 - 1901	F653		T=0.65		9004A-56063-	33		
				#	(90045-64597-)	1		
1901 -	F65#		T=0.29		9004A-56051-	33		
				#	(90045-64585-)	1		
1901 -	F65#		T=0.32		9004A-56052-	33		
				#	(90045-64586-)	1		
1901 -	F65#		T=0.35		9004A-56053-	33		
				#	(90045-64587-)	1		
1901 -	F65#		T=0.38		9004A-56054-	33		
				#	(90045-64588-)	1		
1901 -	F65#		T=0.41		9004A-56055-	33		
				#	(90045-64589-)	1		
1901 -	F65#		T=0.44		9004A-56056-	33		
				#	(90045-64590-)	1		
1901 -	F65#		T=0.47		9004A-56057-	33		
				#	(90045-64591-)	1		
1901 -	F65#		T=0.50		9004A-56058-	33		
				#	(90045-64592-)	1		
1901 -	F65#		T=0.53		9004A-56059-	33		
				#	(90045-64593-)	1		
1901 -	F65#		T=0.56		9004A-56060-	33		
				#	(90045-64594-)	1		

PROD_DATE	MODELS	SPEC CODE	DESCRIPTION	R/P	PART NUMBER	QYT	REV_REF FR	REV_REF TO
	+----------+							
	| 41201D | WASHER, PLATE (FOR REAR DIFFERENTIAL DRIVE PINION)							
	CONTINUED--+							
1901 -	F65#		T=0.59		9004A-56061-	33		
				#	(90045-64595-)	1		
1901 -	F65#		T=0.62		9004A-56062-	33		
				#	(90045-64596-)	1		
1901 -	F65#		T=0.65		9004A-56063-	33		
				#	(90045-64597-)	1		
	+----------+							
	| 41201E | SHIM (FOR REAR DIFF DRIVE PINION SPACER FRONT ADJUST)							
	+----------+							
1111 - 1507	F65#		T=1.65		9004A-56064-	33		
				#	(90045-64550-)	1		
1111 - 1507	F65#		T=1.70		9004A-56065-	33		
				#	(90045-64551-)	1		
1111 - 1507	F65#		T=1.75		9004A-56066-	33		
				#	(90045-64552-)	1		
1111 - 1507	F65#		T=1.80		9004A-56067-	33		
				#	(90045-64553-)	1		
1111 - 1507	F65#		T=1.85		9004A-56068-	33		
				#	(90045-64554-)	1		
1111 - 1507	F65#		T=1.90		9004A-56069-	33		
				#	(90045-64555-)	1		
1111 - 1507	F65#		T=1.95		9004A-56070-	33		
				#	(90045-64556-)	1		
1111 - 1507	F65#		T=2.00		9004A-56071-	33		
				#	(90045-64557-)	1		
1111 - 1507	F65#		T=2.05		9004A-56072-	33		
				#	(90045-64558-)	1		
1111 - 1507	F65#		T=2.10		9004A-56073-	33		
				#	(90045-64559-)	1		
1111 - 1507	F65#		T=2.15		9004A-56074-	33		
				#	(90045-64560-)	1		
1111 - 1507	F65#		T=2.20		9004A-56075-	33		
				#	(90045-64561-)	1		
1111 - 1507	F65#		T=2.25		9004A-56076-	33		
				#	(90045-64562-)	1		

FIG.41-01 REAR AXLE HOUSING & DIFFERENTIAL

PROD_DATE	MODELS	SPEC CODE	DESCRIPTION	R/P	PART NUMBER	QYT	REV_REF FR	REV_REF TO
	+----------+							
	| 41201E | SHIM (FOR REAR DIFF DRIVE PINION SPACER FRONT ADJUST)							
	CONTINUED--+							
1111 - 1507	F65#		T=2.30		9004A-56077-	33		
				#	(90045-64563-)	1		
1111 - 1507	F65#		T=2.35		9004A-56078-	33		
				#	(90045-64564-)	1		
1111 - 1507	F65#		T=2.40		9004A-56079-	33		
				#	(90045-64565-)	1		
1111 - 1507	F65#		T=2.45		9004A-56080-	33		
				#	(90045-64566-)	1		
1507 - 1607	F650		T=1.65		9004A-56064-	33		
				#	(90045-64550-)	1		
1507 - 1607	F650		T=1.70		9004A-56065-	33		
				#	(90045-64551-)	1		
1507 - 1607	F650		T=1.75		9004A-56066-	33		
				#	(90045-64552-)	1		
1507 - 1607	F650		T=1.80		9004A-56067-	33		
				#	(90045-64553-)	1		
1507 - 1607	F650		T=1.85		9004A-56068-	33		
				#	(90045-64554-)	1		
1507 - 1607	F650		T=1.90		9004A-56069-	33		
				#	(90045-64555-)	1		
1507 - 1607	F650		T=1.95		9004A-56070-	33		
				#	(90045-64556-)	1		
1507 - 1607	F650		T=2.00		9004A-56071-	33		
				#	(90045-64557-)	1		
1507 - 1607	F650		T=2.05		9004A-56072-	33		
				#	(90045-64558-)	1		
1507 - 1607	F650		T=2.10		9004A-56073-	33		
				#	(90045-64559-)	1		
1507 - 1607	F650		T=2.15		9004A-56074-	33		
				#	(90045-64560-)	1		
1507 - 1607	F650		T=2.20		9004A-56075-	33		
				#	(90045-64561-)	1		
1507 - 1607	F650		T=2.25		9004A-56076-	33		
				#	(90045-64562-)	1		

PROD_DATE	MODELS	SPEC CODE	DESCRIPTION	R/P	PART NUMBER	QYT	REV_REF FR	REV_REF TO
	+----------+							
	| 41201E | SHIM (FOR REAR DIFF DRIVE PINION SPACER FRONT ADJUST)							
	CONTINUED--+							
1507 - 1607	F650		T=2.30	#	9004A-56077- (90045-64563-)	33 1		
1507 - 1607	F650		T=2.35	#	9004A-56078- (90045-64564-)	33 1		
1507 - 1607	F650		T=2.40	#	9004A-56079- (90045-64565-)	33 1		
1507 - 1607	F650		T=2.45	#	9004A-56080- (90045-64566-)	33 1		
1507 - 1901	F653		T=1.65	#	9004A-56064- (90045-64550-)	33 1		
1507 - 1901	F653		T=1.70	#	9004A-56065- (90045-64551-)	33 1		
1507 - 1901	F653		T=1.75	#	9004A-56066- (90045-64552-)	33 1		
1507 - 1901	F653		T=1.80	#	9004A-56067- (90045-64553-)	33 1		
1507 - 1901	F653		T=1.85	#	9004A-56068- (90045-64554-)	33 1		
1507 - 1901	F653		T=1.90	#	9004A-56069- (90045-64555-)	33 1		
1507 - 1901	F653		T=1.95	#	9004A-56070- (90045-64556-)	33 1		
1507 - 1901	F653		T=2.00	#	9004A-56071- (90045-64557-)	33 1		
1507 - 1901	F653		T=2.05	#	9004A-56072- (90045-64558-)	33 1		
1507 - 1901	F653		T=2.10	#	9004A-56073- (90045-64559-)	33 1		
1507 - 1901	F653		T=2.15	#	9004A-56074- (90045-64560-)	33 1		
1507 - 1901	F653		T=2.20	#	9004A-56075- (90045-64561-)	33 1		
1507 - 1901	F653		T=2.25	#	9004A-56076- (90045-64562-)	33 1		

FIG.41-01 REAR AXLE HOUSING & DIFFERENTIAL

PROD_DATE	MODELS	SPEC CODE	DESCRIPTION	R/P	PART NUMBER	QYT	REV_REF FR	REV_REF TO
	+----------+							
	| 41201E | SHIM (FOR REAR DIFF DRIVE PINION SPACER FRONT ADJUST)							
	CONTINUED--+							
1507 - 1901	F653		T=2.30	#	9004A-56077- (90045-64563-)	33 1		
1507 - 1901	F653		T=2.35	#	9004A-56078- (90045-64564-)	33 1		
1507 - 1901	F653		T=2.40	#	9004A-56079- (90045-64565-)	33 1		
1507 - 1901	F653		T=2.45	#	9004A-56080- (90045-64566-)	33 1		
1901 -	F65#		T=1.65	#	9004A-56064- (90045-64550-)	33 1		
1901 -	F65#		T=1.70	#	9004A-56065- (90045-64551-)	33 1		
1901 -	F65#		T=1.75	#	9004A-56066- (90045-64552-)	33 1		
1901 -	F65#		T=1.80	#	9004A-56067- (90045-64553-)	33 1		
1901 -	F65#		T=1.85	#	9004A-56068- (90045-64554-)	33 1		
1901 -	F65#		T=1.90	#	9004A-56069- (90045-64555-)	33 1		
1901 -	F65#		T=1.95	#	9004A-56070- (90045-64556-)	33 1		
1901 -	F65#		T=2.00	#	9004A-56071- (90045-64557-)	33 1		
1901 -	F65#		T=2.05	#	9004A-56072- (90045-64558-)	33 1		
1901 -	F65#		T=2.10	#	9004A-56073- (90045-64559-)	33 1		
1901 -	F65#		T=2.15	#	9004A-56074- (90045-64560-)	33 1		
1901 -	F65#		T=2.20	#	9004A-56075- (90045-64561-)	33 1		
1901 -	F65#		T=2.25	#	9004A-56076- (90045-64562-)	33 1		

PROD_DATE	MODELS	SPEC CODE	DESCRIPTION	R/P	PART NUMBER	QYT	REV_REF FR	REV_REF TO
	+----------+							
	| 41201E | SHIM (FOR REAR DIFF DRIVE PINION SPACER FRONT ADJUST)							
	CONTINUED--+							
1901 -	F65#		T=2.30		9004A-56077-	33		
				#	(90045-64563-)	1		
1901 -	F65#		T=2.35		9004A-56078-	33		
				#	(90045-64564-)	1		
1901 -	F65#		T=2.40		9004A-56079-	33		
				#	(90045-64565-)	1		
1901 -	F65#		T=2.45		9004A-56080-	33		
				#	(90045-64566-)	1		
	+----------+							
	| 41204 | FLANGE SUB-ASSY, REAR DRIVE PINION COMPANION, REAR							
	+----------+							
1111 - 1507	F65#..5F				41204-BZ010-	1		
				#	(41204-87403-)	1		
1111 - 1507	F651..E4AT				41204-BZ021-	1		
1507 - 1607	F650				41204-BZ010-	1		
				#	(41204-87403-)	1		
1507 - 1901	F653..5F				41204-BZ010-	1		
				#	(41204-87403-)	1		
1507 - 1901	F653..E4AT				41204-BZ021-	1		
1901 -	F653..5F				41204-BZ010-	1		
				#	(41204-87403-)	1		
1901 -	F653..E4AT				41204-BZ021-	1		
1901 -	F654..5F				41204-BZ030-	1		
				#	(41204-B4020-)	1		
1901 -	F654..E4AT				41204-BZ041-	1		
				#	(41204-B0010-)	1		
	+----------+							
	| 41231 | SPACER, REAR DIFFERENTIAL DRIVE PINION BEARING							
	+----------+							
1111 - 1507	F65#				41231-BZ020-	1		
				#	(41231-B4020-)	1		
1507 - 1607	F650				41231-BZ020-	1		
				#	(41231-B4020-)	1		
1507 - 1901	F653				41231-BZ020-	1		
				#	(41231-B4020-)	1		

FIG.41-01 REAR AXLE HOUSING & DIFFERENTIAL

PROD_DATE	MODELS	SPEC CODE	DESCRIPTION	R/P	PART NUMBER	QYT	REV_REF FR	REV_REF TO
	+----------+							
	| 41231 | SPACER, REAR DIFFERENTIAL DRIVE PINION BEARING							
	CONTINUED--+							
1901 -	F65#				41231-BZ020-	1		
				#	(41231-B4020-)	1		
	+----------+							
	| 41252 | DEFLECTOR, DUST (FOR REAR DIFFERENTIAL)							
	+----------+							
1111 - 1507	F65#				41252-BZ010-	1		
				#	(41252-87503-)	1		
1507 - 1607	F650				41252-BZ010-	1		
				#	(41252-87503-)	1		
1507 - 1901	F653				41252-BZ010-	1		
				#	(41252-87503-)	1		
1901 -	F65#				41252-BZ010-	1		
				#	(41252-87503-)	1		
	+----------+							
	| 41301A | BEARING(FOR REAR DIFFERENTIAL CASE)							
	+----------+							
1111 - 1507	F65#				9004A-36029-	2		
				#	(90043-66075-)	1		
1507 - 1607	F650				9004A-36029-	2		
				#	(90043-66075-)	1		
1507 - 1901	F653				9004A-36029-	2		
				#	(90043-66075-)	1		
1901 -	F65#				9004A-36029-	2		
				#	(90043-66075-)	1		
	+----------+							
	| 41311J | CASE, REAR DIFFERENTIAL							
	+----------+							
1111 - 1504	F65#				41311-BZ020-	1		
				#	(41311-B4011-)	1		
1505 - 1507	F65#				41311-BZ021-	1		
				#	(41311-B4011-)	1		
1507 - 1607	F650				41311-BZ021-	1		
				#	(41311-B4011-)	1		
1507 - 1901	F653				41311-BZ021-	1		
				#	(41311-B4011-)	1		
1901 - 1910	F654				41311-BZ021-	1		
				#	(41311-B4011-)	1		

PROD_DATE	MODELS	SPEC CODE	DESCRIPTION	R/P	PART NUMBER	QYT	REV_REF FR	REV_REF TO
	+----------+							
	| 41311J | CASE, REAR DIFFERENTIAL							
	CONTINUED--+							
1901 -	F653				41311-BZ021-	1		
				#	(41311-B4011-)	1		
1911 -	F654				41311-BZ130-	1		
	+----------+							
	| 41312 | COVER, DIFFERENTIAL CASE							
	+----------+							
1111 - 1507	F65#				41312-BZ010-	1		
				#	(41312-B4011-)	1		
1507 - 1607	F650				41312-BZ010-	1		
				#	(41312-B4011-)	1		
1507 - 1901	F653				41312-BZ010-	1		
				#	(41312-B4011-)	1		
1901 - 1910	F654				41312-BZ010-	1		
				#	(41312-B4011-)	1		
1901 -	F653				41312-BZ010-	1		
				#	(41312-B4011-)	1		
1911 -	F654				41312-BZ030-	1		
	+----------+							
	| 41315 | NUT, REAR DIFFERENTIAL BEARING ADJUSTING							
	+----------+							
1111 - 1507	F65#				41315-BZ010-	2		
				#	(41315-87503-)	1		
1507 - 1607	F650				41315-BZ010-	2		
				#	(41315-87503-)	1		
1507 - 1901	F653				41315-BZ010-	2		
				#	(41315-87503-)	1		
1901 -	F65#				41315-BZ010-	2		
				#	(41315-87503-)	1		
	+----------+							
	| 41316 | LOCK, REAR DIFFERENTIAL BEARING ADJUSTING NUT							
	+----------+							
1111 - 1507	F65#				41316-BZ010-	2		
				#	(41316-87501-)	1		
1507 - 1607	F650				41316-BZ010-	2		
				#	(41316-87501-)	1		
1507 - 1901	F653				41316-BZ010-	2		
				#	(41316-87501-)	1		

FIG.41-01 REAR AXLE HOUSING & DIFFERENTIAL

PROD_DATE	MODELS	SPEC CODE	DESCRIPTION	R/P	PART NUMBER	QYT	REV_REF FR	REV_REF TO
	+----------+							
	| 41316 | LOCK, REAR DIFFERENTIAL BEARING ADJUSTING NUT							
	CONTINUED--+							
1901 -	F65#				41316-BZ010-	2		
				#	(41316-87501-)	1		
	+----------+							
	| 41331 | GEAR, REAR DIFFERENTIAL SIDE							
	+----------+							
1111 - 1507	F65#				41331-BZ010-	2		
				#	(41331-87407-)	1		
1507 - 1607	F650				41331-BZ010-	2		
				#	(41331-87407-)	1		
1507 - 1901	F653				41331-BZ010-	2		
				#	(41331-87407-)	1		
1901 - 1910	F654				41331-BZ010-	2		
				#	(41331-87407-)	1		
1901 -	F653				41331-BZ010-	2		
				#	(41331-87407-)	1		
1911 -	F654				41331-BZ070-	2		
	+----------+							
	| 41341 | PINION, REAR DIFFERENTIAL							
	+----------+							
1111 - 1507	F65#				41341-BZ010-	2		
				#	(41341-87406-)	1		
1507 - 1607	F650				41341-BZ010-	2		
				#	(41341-87406-)	1		
1507 - 1901	F653				41341-BZ010-	2		
				#	(41341-87406-)	1		
1901 - 1910	F654				41341-BZ010-	4		
				#	(41341-87406-)	1		
1901 -	F653				41341-BZ010-	2		
				#	(41341-87406-)	1		
1911 -	F654				41341-BZ070-	2		
	+----------+							
	| 41342 | SHAFT, REAR DIFFERENTIAL PINION							
	+----------+							
1111 - 1507	F65#				41342-BZ020-	1		
				#	(41342-87402-)	1		
1507 - 1607	F650				41342-BZ020-	1		
				#	(41342-87402-)	1		

PROD_DATE	MODELS	SPEC CODE	DESCRIPTION	R/P	PART NUMBER	QYT	REV_REF FR	REV_REF TO
	+----------+							
	| 41342 | SHAFT, REAR DIFFERENTIAL PINION							
	CONTINUED--+							
1507 - 1901	F653				41342-BZ020-	1		
				#	(41342-87402-)	1		
1901 - 1910	F654				41342-BZ020-	1		
				#	(41342-87402-)	1		
1901 -	F653				41342-BZ020-	1		
				#	(41342-87402-)	1		
1911 -	F654				41342-BZ080-	1		
	+----------+							
	| 41342M | SHAFT, REAR DIFFERENTIAL PINION, NO.2							
	+----------+							
1901 - 1911	F654				41342-BZ030-	2		
				#	(41342-B4010-)	1		
	+----------+							
	| 41361 | WASHER, REAR DIFFERENTIAL SIDE GEAR THRUST, NO.1							
	+----------+							
1111 - 1507	F65#		T=1.15		41361-BZ010-	2		
				#	(41361-87407-)	1		
1111 - 1507	F65#		T=1.25		41361-BZ020-	2		
				#	(41361-87408-)	1		
1111 - 1507	F65#		T=1.35		41361-BZ030-	2		
				#	(41361-87409-)	1		
1111 - 1507	F65#		T=1.1		41361-BZ040-	2		
				#	(41361-87509-)	1		
1111 - 1507	F65#		T=1.3		41361-BZ050-	2		
				#	(41361-87510-)	1		
1111 - 1507	F65#		T=1.2		41361-BZ060-	2		
				#	(41361-87709-)	1		
1507 - 1607	F650		T=1.15		41361-BZ010-	2		
				#	(41361-87407-)	1		
1507 - 1607	F650		T=1.25		41361-BZ020-	2		
				#	(41361-87408-)	1		
1507 - 1607	F650		T=1.35		41361-BZ030-	2		
				#	(41361-87409-)	1		
1507 - 1607	F650		T=1.1		41361-BZ040-	2		
				#	(41361-87509-)	1		

FIG.41-01 REAR AXLE HOUSING & DIFFERENTIAL

PROD_DATE	MODELS	SPEC CODE	DESCRIPTION	R/P	PART NUMBER	QYT	REV_REF FR	REV_REF TO
	+----------+							
	| 41361 | WASHER, REAR DIFFERENTIAL SIDE GEAR THRUST, NO.1							
	CONTINUED--+							
1507 - 1607	F650		T=1.3		41361-BZ050-	2		
				#	(41361-87510-)	1		
1507 - 1607	F650		T=1.2		41361-BZ060-	2		
				#	(41361-87709-)	1		
1507 - 1901	F653		T=1.15		41361-BZ010-	2		
				#	(41361-87407-)	1		
1507 - 1901	F653		T=1.25		41361-BZ020-	2		
				#	(41361-87408-)	1		
1507 - 1901	F653		T=1.35		41361-BZ030-	2		
				#	(41361-87409-)	1		
1507 - 1901	F653		T=1.1		41361-BZ040-	2		
				#	(41361-87509-)	1		
1507 - 1901	F653		T=1.3		41361-BZ050-	2		
				#	(41361-87510-)	1		
1507 - 1901	F653		T=1.2		41361-BZ060-	2		
				#	(41361-87709-)	1		
1901 -	F65#		T=1.15		41361-BZ010-	2		
				#	(41361-87407-)	1		
1901 -	F65#		T=1.25		41361-BZ020-	2		
				#	(41361-87408-)	1		
1901 -	F65#		T=1.35		41361-BZ030-	2		
				#	(41361-87409-)	1		
1901 -	F65#		T=1.1		41361-BZ040-	2		
				#	(41361-87509-)	1		
1901 -	F65#		T=1.3		41361-BZ050-	2		
				#	(41361-87510-)	1		
1901 -	F65#		T=1.2		41361-BZ060-	2		
				#	(41361-87709-)	1		
	+----------+							
	| 41371 | SPIDER, REAR DIFFERENTIAL							
	+----------+							
1901 - 1911	F654				41371-BZ011-	1		
				#	(41371-B4010-)	1		

PROD_DATE	MODELS	SPEC CODE	DESCRIPTION	R/P	PART NUMBER	QYT	REV_REF FR	REV_REF TO
	+----------+							
	| 42110 | HOUSING ASSY, REAR AXLE							
	+----------+							
1111 - 1208	F651..E4AT		TYPE A		42110-BZ031-	1		
1111 - 1507	F650		TYPE A		42110-BZ031-	1		
1111 - 1507	F651..5F		TYPE A L/ABS		42110-BZ031-	1		
1208 - 1507	F651..E4AT		TYPE B		42110-BZ240-	1		
1507 - 1607	F650				42110-BZ270-	1		
1507 - 1901	F653				42110-BZ270-	1		
1901 -	F653				42110-BZ270-	1		
1901 -	F654				42110-BZ280-	1		
	+----------+							
	| 42110C | PLUG, BREATHER (FOR REAR AXLE HOUSING)							
	+----------+							
1111 - 1507	F65#				90049-15026-	1		
1507 - 1607	F650				90049-15026-	1		
1507 - 1901	F653				90049-15026-	1		
1901 -	F65#				90049-15026-	1		
	+----------+							
	| 42110D | GASKET (FOR REAR AXLE HOUSING DRAIN PLUG)							
	+----------+							
1111 - 1507	F65#				90044-30237-	1		
1507 - 1607	F650				90044-30237-	1		
1507 - 1901	F653				90044-30237-	1		
1901 -	F65#				90044-30237-	1		
	+----------+							
	| 42110E | PLUG (FOR REAR AXLE HOUSING DRAIN)							
	+----------+							
1111 - 1507	F65#				90043-41068-	1		
1507 - 1607	F650				90043-41068-	1		
1507 - 1901	F653				90043-41068-	1		
1901 -	F65#				90043-41068-	1		

FIG.41-01 REAR AXLE HOUSING & DIFFERENTIAL

PROD_DATE	MODELS	SPEC CODE	DESCRIPTION	R/P	PART NUMBER	QYT	REV_REF FR	REV_REF TO
	+----------+							
	| 42110L | PLUG BREATHER, NO.2							
	+----------+							
1111 - 1507	F65#				9004A-93004-	1		
				#	(90049-15052-)	1		
1507 - 1607	F650				9004A-93004-	1		
				#	(90049-15052-)	1		
1507 - 1901	F653				9004A-93004-	1		
				#	(90049-15052-)	1		
1901 -	F65#				9004A-93004-	1		
				#	(90049-15052-)	1		

(1111-)

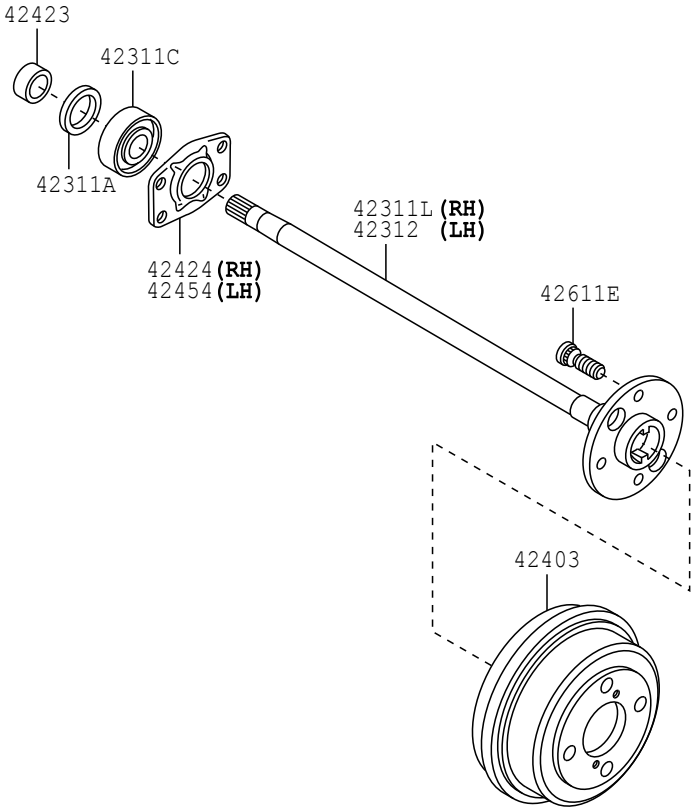

4102 413603

FIG.41-02 REAR AXLE SHAFT & HUB

PROD_DATE	MODELS	SPEC CODE	DESCRIPTION	R/P	PART NUMBER	QYT	REV_REF FR	REV_REF TO
	+----------+							
	| 42311A | SEAL, OIL (FOR REAR AXLE SHAFT)							
	+----------+							
1111 - 1507	F65#				9004A-31018-	2		
				#	(90043-11291-)	1		
1507 - 1607	F650				9004A-31018-	2		
				#	(90043-11291-)	1		
1507 - 1901	F653				9004A-31018-	2		
				#	(90043-11291-)	1		
1901 -	F65#				9004A-31018-	2		
				#	(90043-11291-)	1		
	+----------+							
	| 42311C | BEARING (FOR REAR AXLE SHAFT)							
	+----------+							
1111 - 1507	F65#				9004A-36012-	2		
1507 - 1607	F650				9004A-36012-	2		
1507 - 1901	F653				9004A-36012-	2		
1901 -	F65#				9004A-36012-	2		
	+----------+							
	| 42311L | SHAFT, REAR AXLE, RH							
	+----------+							
1111 - 1507	F65#				42301-BZ110-	1		
1507 - 1603	F65#				42301-BZ110-	1		
1603 - 1607	F650				42311-BZ080-	1		
1603 - 1901	F653				42311-BZ080-	1		
1901 -	F65#				42311-BZ080-	1		
	+----------+							
	| 42312 | SHAFT, REAR AXLE, LH							
	+----------+							
1111 - 1507	F65#				42302-BZ100-	1		
1507 - 1603	F65#				42302-BZ100-	1		
1603 - 1607	F650				42312-BZ080-	1		
1603 - 1901	F653				42312-BZ080-	1		
1901 -	F65#				42312-BZ080-	1		

PROD_DATE	MODELS	SPEC CODE	DESCRIPTION	R/P	PART NUMBER	QYT	REV_REF FR	REV_REF TO
	+----------+							
	| 42403 | DRUM SUB-ASSY, REAR BRAKE							
	+----------+							
1111 - 1507	F65#				42431-BZ010-	2		
1507 - 1607	F650				42431-BZ010-	2		
1507 - 1901	F653				42431-BZ010-	2		
1901 -	F65#				42431-BZ010-	2		
	+----------+							
	| 42423 | RETAINER, REAR AXLE BEARING, INNER							
	+----------+							
1111 - 1507	F651..5F		L/ABS		42423-BZ010-	2		
1111 - 1507	F650				42423-BZ010-	2		
1111 - 1507	F651..E4AT				42423-BZ010-	2		
1507 - 1607	F650				42423-BZ010-	2		
1507 - 1901	F653				42423-BZ010-	2		
1901 -	F653				42423-BZ010-	2		
1901 -	F654				42423-BZ020-	2		
	+----------+							
	| 42424 | RETAINER, REAR AXLE BEARING, OUTER, RH							
	+----------+							
1111 - 1507	F65#				42424-BZ010-	1		
1507 - 1607	F650				42424-BZ010-	1		
1507 - 1901	F653				42424-BZ010-	1		
1901 -	F65#				42424-BZ010-	1		
	+----------+							
	| 42454 | RETAINER, REAR AXLE BEARING, OUTER, LH							
	+----------+							
1111 - 1507	F65#				42424-BZ010-	1		
1507 - 1607	F650				42424-BZ010-	1		
1507 - 1901	F653				42424-BZ010-	1		
1901 -	F65#				42424-BZ010-	1		
	+----------+							
	| 42611E | BOLT, HUB (FOR REAR AXLE)							
	+----------+							
1111 - 1507	F65#				90049-12055-	8		

FIG.41-02 REAR AXLE SHAFT & HUB

PROD_DATE	MODELS	SPEC CODE	DESCRIPTION	R/P	PART NUMBER	QYT	REV_REF FR	REV_REF TO
	+----------+							
	| 42611E | BOLT, HUB (FOR REAR AXLE)							
	CONTINUED--+							
1507 - 1607	F650				90049-12055-	8		
1507 - 1901	F653				90049-12055-	8		
1901 -	F65#				90049-12055-	8		

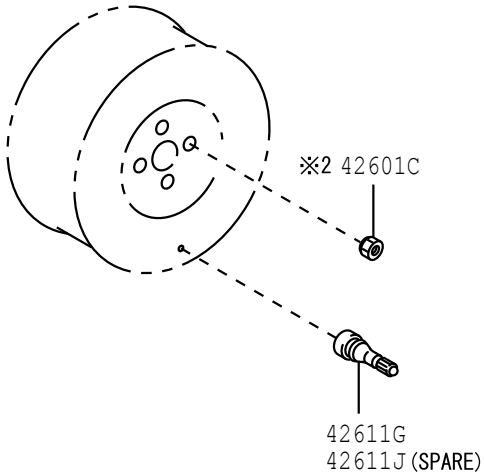

※1 Confirm the Manufacturer's Logo Mark located at the reverse side of Disc Wheel.

42601

TYPE	A		TYPE	B		TYPE	H	
SIZE	13×5J	STEEL	SIZE	14×5J	STEEL	SIZE	14×5J	ALUMINUM
MARK		INKOASKU	MARK		INKOASKU	MARK	※1	EXCEL

42601A

TYPE	A		TYPE	B	
SIZE	13×5J	STEEL	SIZE	14×5J	STEEL
MARK		INKOASKU	MARK		INKOASKU

※2

TYPE	A	TYPE	B

42603

TYPE	A	TYPE	B

(1111-)

ILLUST NO. 2 OF 2

BALANCE WEIGHT(FOR DISC WHEEL)

FOR STEEL WHEEL		FOR ALUMINUM WHEEL			
				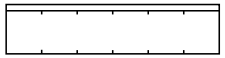	
WEIGHT	PART NO.	WEIGHT	PART NO.	WEIGHT	PART NO.
5G	9004A-42072	5G	9004A-42085	5G	9004A-42098
10G	9004A-42073	10G	9004A-42086	10G	9004A-42099
15G	9004A-42074	15G	9004A-42087	15G	————
20G	9004A-42075	20G	9004A-42088	20G	9004A-42101
25G	9004A-42076	25G	9004A-42089	25G	————
27.5G	9004A-42077	27.5G	9004A-42090	27.5G	————
30G	9004A-42078	30G	9004A-42091	30G	9004A-42103
32.5G	9004A-42079	32.5G	9004A-42092	32.5G	————
35G	9004A-42080	35G	9004A-42093	35G	————
37.5G	9004A-42081	37.5G	9004A-42094	37.5G	————
40G	9004A-42082	40G	9004A-42095	40G	————
45G	9004A-42083	45G	9004A-42096	45G	————
50G	9004A-42084	50G	9004A-42097	50G	9004A-42107

TUBELESS TIRE

SIZE	MAKER
165/80R13 83S	BRIDGESTONE
185/70R14 88S	BRIDGESTONE
185/70R14 88S	DUNLOP
185/70R14 88S	PT GAJAH TUNGGAL Tbk

PROD_DATE	MODELS	SPEC CODE	DESCRIPTION	R/P	PART NUMBER	QYT	REV_REF FR	REV_REF TO
	+----------+ | 42601 | WHEEL, DISC +----------+							
1111 - 1507	F650		13X5J OFFSET 45,TYPE A INKOASKU		42611-BZ010-	4		
1111 - 1507	F651		14X5J,SILVER,TYPE B INKOASKU		42611-BZ510-	4		
1507 - 1607	F650..STD		13X5J OFFSET 45,TYPE A SILVER		42611-BZ010-	4		
1507 - 1607	F650..LO		13X5J(ST),TYPE A BLACK		42611-BZ700-	4		
1507 - 1901	F653		14X5J,TYPE B BLACK		42611-BZ520-	4		
1610 - 1901	F653..LO..5F	B2AE	14X5J,SILVER,INDONESIA TAXI,TYPE B SILVER		42611-BZ510-	4		
1901 -	F653..LO..5F	B2AE	14X5J,SILVER,INDONESIA TAXI,TYPE B SILVER		42611-BZ510-	4		
1901 -	F653..LO		14X5J,TYPE B BLACK		42611-BZ520-	4		
1901 -	F65#..STD		14X5J(AL),TYPE H		42611-BZC70-	4		
	+----------+ | 42601A | WHEEL, DISC (FOR SPARE) +----------+							
1111 - 1507	F650		13X5J OFFSET 45,TYPE A INKOASKU		42611-BZ010-	1		
1111 - 1507	F651		14X5J,SILVER,TYPE B INKOASKU		42611-BZ510-	1		
1507 - 1607	F650..STD		13X5J OFFSET 45,TYPE A SILVER		42611-BZ010-	1		
1507 - 1607	F650..LO		13X5J(ST),TYPE A BLACK		42611-BZ700-	1		
1507 - 1901	F653		14X5J,TYPE B BLACK		42611-BZ520-	1		
1610 - 1901	F653..LO..5F	B2AE	14X5J,SILVER,INDONESIA TAXI,TYPE B SILVER		42611-BZ510-	1		
1901 -	F653..LO..5F	B2AE	14X5J,SILVER,INDONESIA TAXI,TYPE B SILVER		42611-BZ510-	1		

PROD_DATE	MODELS	SPEC CODE	DESCRIPTION	R/P	PART NUMBER	QYT	REV_REF FR	REV_REF TO
	+----------+							
	| 42601A | WHEEL, DISC (FOR SPARE)							
	CONTINUED--+							
1901 -	F65#		14X5J,TYPE B BLACK		42611-BZ520-	1		
	+----------+							
	| 42601C | NUT, HUB (FOR AXLE)							
	+----------+							
1111 - 1507	F65#		TYPE B		90049-11064-	16		
1507 - 1510	F650..STD		TYPE B		90049-11064-	16		
1507 - 1605	F653		TYPE A		90049-11036-	16		
1507 - 1605	F650..LO		TYPE A		90049-11036-	16		
1510 - 1607	F650..STD		TYPE B		9004A-94124-	16		
				#	(90049-11064-)	1		
1605 - 1607	F650..LO		TYPE A		9004A-94125-	16		
				#	(90049-11036-)	1		
1605 - 1901	F653		TYPE A		9004A-94125-	16		
				#	(90049-11036-)	1		
1610 - 1901	F653..LO..5F	B2AE	INDONESIA TAXI,TYPE B		9004A-94124-	16		
				#	(90049-11064-)	1		
1901 -	F65#..STD		TYPE B		9004A-94124-	16		
				#	(90049-11064-)	1		
1901 -	F653..LO..5F	B2AE	INDONESIA TAXI,TYPE B		9004A-94124-	16		
				#	(90049-11064-)	1		
1901 -	F653..LO		TYPE A		9004A-94125-	16		
				#	(90049-11036-)	1		
	+----------+							
	| 42603 | ORNAMENT SUB-ASSY, WHEEL HUB							
	+----------+							
1111 - 1409	F650		*STE,TYPE A W(LABEL)		42638-BZ010-	4		
1111 - 1409	F651		*STE,TYPE A W(LABEL)		42638-BZ020-	4		
1410 - 1507	F650		*STE,TYPE A W(LABEL)		42638-BZ011-	4		
1410 - 1507	F651		*STE,TYPE A W(LABEL)		42638-BZ021-	4		
1610 - 1901	F653..LO..5F	B2AE	*STE,INDONESIA TAXI, TYPE A W(LABEL)		42638-BZ021-	4		
1901 -	F653..LO..5F	B2AE	*STE,INDONESIA TAXI, TYPE A W(LABEL)		42638-BZ021-	4		

FIG.41-03 DISC WHEEL & WHEEL CAP

PROD_DATE	MODELS	SPEC CODE	DESCRIPTION	R/P	PART NUMBER	QYT	REV_REF FR	REV_REF TO
	+----------+							
	| 42603 | ORNAMENT SUB-ASSY, WHEEL HUB							
	CONTINUED--+							
1901 -	F65#..STD		*ALU,TYPE B W(LABEL)		42638-BZ560-	4		
	+----------+							
	| 42611G | VALVE (FOR TUBELESS TIRE)							
	+----------+							
1111 - 1507	F65#				90049-02019-	4		
1507 - 1607	F650				90049-02019-	4		
1507 - 1901	F653				90049-02019-	4		
1901 -	F65#				90049-02019-	4		
	+----------+							
	| 42611J | VALVE (FOR TUBELESS TIRE SPARE)							
	+----------+							
1111 - 1507	F65#				90049-02019-	1		
1507 - 1607	F650				90049-02019-	1		
1507 - 1901	F653				90049-02019-	1		
1901 -	F65#				90049-02019-	1		

(1111-)

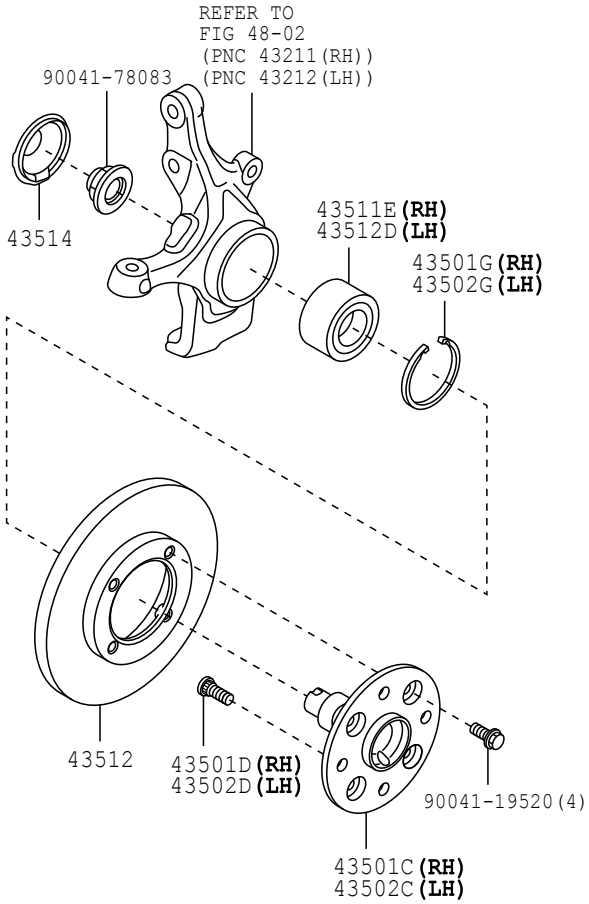

4303 432590

FIG.43-03 FRONT AXLE HUB

PROD_DATE	MODELS	SPEC CODE	DESCRIPTION	R/P	PART NUMBER	QYT	REV_REF FR	REV_REF TO
	43501C		HUB SUB-ASSY, FRONT AXLE, RH					
1111 - 1507	F65#				43511-BZ090-	1		
1507 - 1607	F650				43511-BZ170-	1		
1507 - 1901	F653				43511-BZ170-	1		
1901 -	F65#				43511-BZ170-	1		
	43501D		BOLT, HUB (FOR FRONT AXLE RH)					
1111 - 1507	F65#				90049-12030-	4		
1507 - 1607	F650				90049-12030-	4		
1507 - 1901	F653				90049-12030-	4		
1901 -	F65#				90049-12030-	4		
	43501G		RING, HOLE SNAP (FOR FRONT AXLE HUB RH)					
1111 - 1507	F65#				90045-21111-	1		
1507 - 1607	F650				90045-21111-	1		
1507 - 1901	F653				90045-21111-	1		
1901 -	F65#				90045-21111-	1		
	43502C		HUB SUB-ASSY, FRONT AXLE, LH					
1111 - 1507	F65#				43511-BZ090-	1		
1507 - 1607	F650				43511-BZ170-	1		
1507 - 1901	F653				43511-BZ170-	1		
1901 -	F65#				43511-BZ170-	1		
	43502D		BOLT, HUB (FOR FRONT AXLE LH)					
1111 - 1507	F65#				90049-12030-	4		
1507 - 1607	F650				90049-12030-	4		
1507 - 1901	F653				90049-12030-	4		
1901 -	F65#				90049-12030-	4		

PROD_DATE	MODELS	SPEC CODE	DESCRIPTION	R/P	PART NUMBER	QYT	REV_REF FR	REV_REF TO
	+----------+							
	| 43502G | RING, HOLE SNAP (FOR FRONT AXLE HUB LH)							
	+----------+							
1111 - 1507	F65#				90045-21111-	1		
1507 - 1607	F650				90045-21111-	1		
1507 - 1901	F653				90045-21111-	1		
1901 -	F65#				90045-21111-	1		
	+----------+							
	| 43511E | BEARING (FOR FRONT AXLE HUB RH)							
	+----------+							
1111 - 1507	F65#				9004A-36093-	1		
1507 - 1607	F650		L/ABS		9004A-36093-	1		
1507 - 1703	F653		L/ABS		9004A-36093-	1		
1703 - 1901	F653		L/ABS		9004A-36090-	1		
				#	(90043-63368-)	1		
1901 -	F653		L/ABS		9004A-36090-	1		
				#	(90043-63368-)	1		
1901 -	F654		W/ABS		9004A-36091-	1		
				#	(90043-63369-)	1		
	+----------+							
	| 43512 | DISC, FRONT							
	+----------+							
1111 - 1507	F65#				43512-BZ180-	2		
1507 - 1607	F650				43512-BZ170-	2		
1507 - 1901	F653				43512-BZ170-	2		
1901 -	F65#				43512-BZ170-	2		
	+----------+							
	| 43512D | BEARING (FOR FRONT AXLE HUB LH)							
	+----------+							
1111 - 1507	F65#				9004A-36093-	1		
1507 - 1607	F650				9004A-36093-	1		
1507 - 1901	F653				9004A-36093-	1		
1901 -	F653				9004A-36090-	1		
				#	(90043-63368-)	1		
1901 -	F654		W/ABS		9004A-36091-	1		
				#	(90043-63369-)	1		

FIG.43-03 FRONT AXLE HUB

PROD_DATE	MODELS	SPEC CODE	DESCRIPTION	R/P	PART NUMBER	QYT	REV_REF FR	REV_REF TO
	+----------+							
	| 43514 | CAP, FRONT HUB GREASE							
	+----------+							
1111 - 1507	F65#				43514-BZ040-	2		
1507 - 1607	F650				43514-BZ040-	2		
1507 - 1901	F653				43514-BZ040-	2		
1901 -	F65#				43514-BZ040-	2		

(1111-)

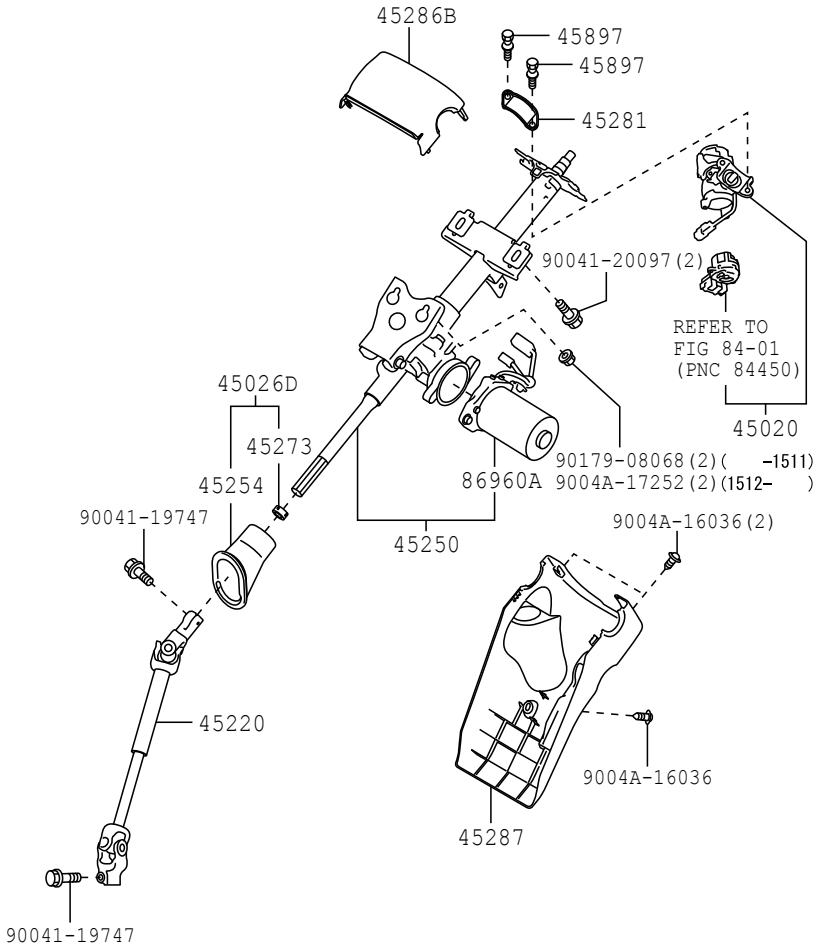

4501 455998-G

FIG.45-01 STEERING COLUMN & SHAFT

PROD_DATE	MODELS	SPEC CODE	DESCRIPTION	R/P	PART NUMBER	QYT	REV_REF FR	REV_REF TO
	45020	BRACKET ASSY, STEERING COLUMN UPPER W/SWITCH						
1111 - 1507	F65#..5F				45020-BZ010-	1		
1111 - 1507	F651..E4AT				45020-BZ090-	1		
1507 - 1607	F650..STD				45020-BZ010-	1		
1507 - 1607	F650..LO				45020-BZ110-	1		
1507 - 1901	F653..E4AT				45020-BZ100-	1		
1507 - 1901	F653..5F				45020-BZ110-	1		
1901 -	F65#..E4AT				45020-BZ100-	1		
1901 -	F65#..5F				45020-BZ110-	1		
	45026D	COVER SUB-ASSY, STEERING COLUMN HOLE						
1111 - 1507	F65#				45025-BZ010-	1		
1507 - 1607	F650				45025-BZ010-	1		
1507 - 1901	F653				45025-BZ010-	1		
1901 -	F65#				45025-BZ010-	1		
	45220	SHAFT ASSY, STEERING INTERMEDIATE						
1111 - 1507	F65#				45220-BZ170-	1		
1507 - 1607	F650				45220-BZ170-	1		
1507 - 1901	F653				45220-BZ170-	1		
1901 - 1909	F65#				45220-BZ170-	1		
1910 -	F65#				45220-BZ171-	1		
	45250	COLUMN ASSY, STEERING						
1111 - 1507	F651..LO				45250-BZ130-	1		
1111 - 1507	F650				45250-BZ140-	1		
1111 - 1507	F651..STD				45250-BZ140-	1		
1507 - 1607	F650				45250-BZ270-	1		

PROD_DATE	MODELS	SPEC CODE	DESCRIPTION	R/P	PART NUMBER	QYT	REV_REF FR	REV_REF TO
	+----------+							
	| 45250 | COLUMN ASSY, STEERING							
	CONTINUED--+							
1507 - 1901	F653..STD				45250-BZ260-	1		
1507 - 1901	F653..LO				45250-BZ270-	1		
1901 -	F65#..STD				45250-BZ260-	1		
1901 -	F653..LO				45250-BZ270-	1		
	+----------+							
	| 45254 | SHIELD, STEERING COLUMN HOLE							
	+----------+							
1111 - 1507	F65#				45254-BZ120-	1		
1507 - 1607	F650				45254-BZ120-	1		
1507 - 1901	F653				45254-BZ120-	1		
1901 -	F65#				45254-BZ120-	1		
	+----------+							
	| 45273 | BUSH, STEERING MAIN SHAFT							
	+----------+							
1111 - 1507	F65#				45273-B0010-	1		
1507 - 1607	F650				45273-B0010-	1		
1507 - 1901	F653				45273-B0010-	1		
1901 -	F65#				45273-B0010-	1		
	+----------+							
	| 45281 | HOUSING, STEERING COLUMN							
	+----------+							
1111 - 1505	F65#				45281-B0010-	1		
1506 - 1507	F65#				45281-BZ110-	1		
1507 - 1607	F650				45281-BZ110-	1		
1507 - 1901	F653				45281-BZ110-	1		
1901 -	F65#				45281-BZ110-	1		
	+----------+							
	| 45286B | COVER, STEERING COLUMN, UPR							
	+----------+							
1111 - 1507	F650..STD		BLACK(TRIM1#)		45286-BZ120-C0	1		
1111 - 1507	F651		BLACK(TRIM4#)		45286-BZ120-C0	1		
1111 - 1507	F650..LO		BLACK(TRIM4#)		45286-BZ120-C0	1		

PROD_DATE	MODELS	SPEC CODE	DESCRIPTION	R/P	PART NUMBER	QYT	REV_REF FR	REV_REF TO
	+----------+							
	| 45286B | COVER, STEERING COLUMN, UPR							
	CONTINUED--+							
1507 - 1607	F650..STD		BLACK(TRIM1#)		45286-BZ160-C0	1		
1507 - 1901	F653		BLACK(TRIM4#)		45286-BZ160-C0	1		
1507 - 1901	F650..LO		BLACK(TRIM4#)		45286-BZ160-C0	1		
1901 -	F65#		BLACK(TRIM4#)		45286-BZ160-C0	1		
	+----------+							
	| 45287 | COVER, STEERING COLUMN, LWR							
	+----------+							
1111 - 1507	F651..LO		BLACK(TRIM4#)		45287-BZ140-C0	1		
1111 - 1507	F650..STD		BLACK(TRIM1#)		45287-BZ150-C0	1		
1111 - 1507	F650..LO		BLACK(TRIM4#)		45287-BZ150-C0	1		
1111 - 1507	F651..STD		BLACK(TRIM4#)		45287-BZ150-C0	1		
1507 - 1607	F650..STD		BLACK(TRIM1#)		45287-BZ210-C0	1		
1507 - 1901	F653..STD		BLACK(TRIM4#)		45287-BZ200-C0	1		
1507 - 1901	F65#..LO		BLACK(TRIM4#)		45287-BZ210-C0	1		
1901 -	F65#..STD		BLACK(TRIM4#)		45287-BZ200-C0	1		
1901 -	F653..LO		BLACK(TRIM4#)		45287-BZ210-C0	1		
	+----------+							
	| 45897 | BOLT, STEERING LOCK SET							
	+----------+							
1111 - 1507	F65#				45897-B2010-	2		
1507 - 1607	F650				45897-B2010-	2		
1507 - 1901	F653				45897-B2010-	2		
1901 -	F65#				45897-B2010-	2		
	+----------+							
	| 86960A | MOTOR SET, POWER STEERING							
	+----------+							
1111 - 1507	F65#				80960-B9140-	1		
1507 - 1901	F65#				80960-B9090-	1		
1901 -	F65#				80960-B9090-	1		

(1111-1507)

L/ AIR BAG(-1304)

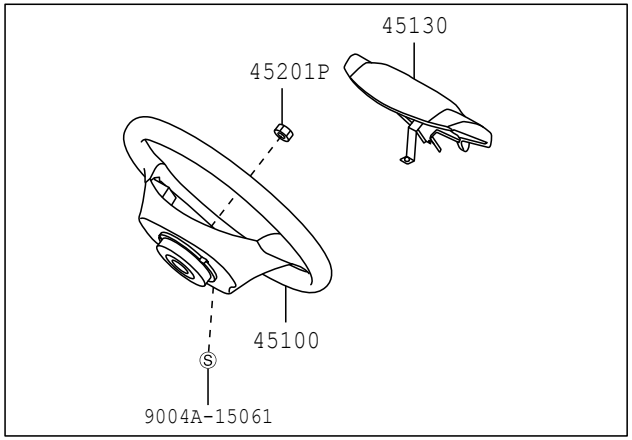

W/ AIR BAG(1304-)

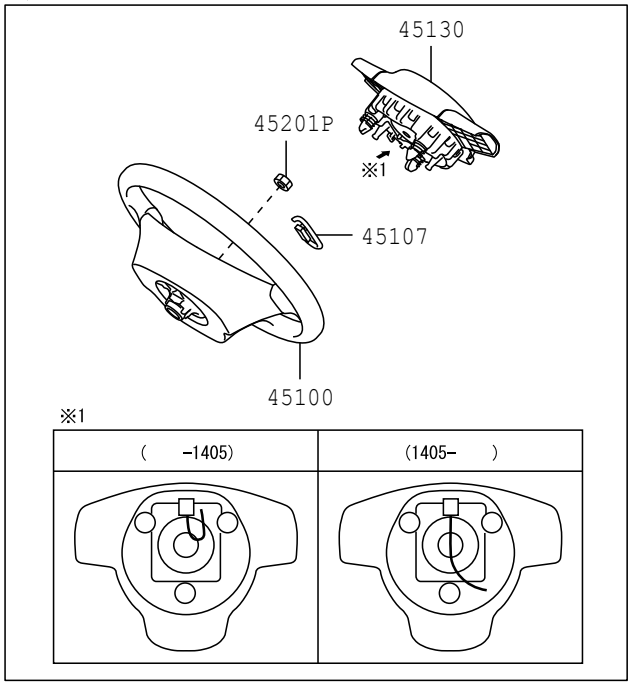

4504 456000-C

(1507-)

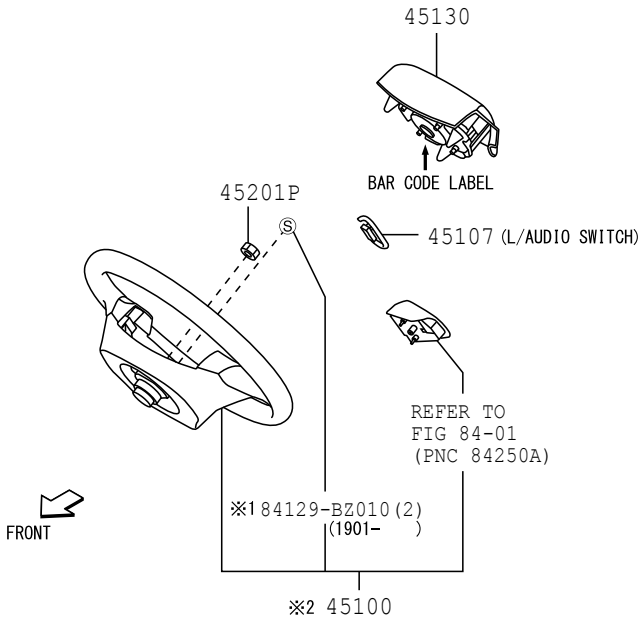

※1 W/SWITCH

※2

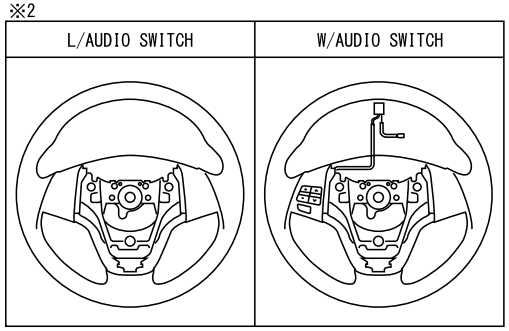

4504 457468

PROD_DATE	MODELS	SPEC CODE	DESCRIPTION	R/P	PART NUMBER	QYT	REV_REF FR	REV_REF TO
	+----------+							
	| 45100 | WHEEL ASSY, STEERING							
	+----------+							
1111 - 1305	F650..STD		BLACK(TRIM1#),W/O(AUDIO SW)		45102-BZ270-C0	1		
1111 - 1305	F651		BLACK(TRIM4#),W/O(AUDIO SW)		45102-BZ270-C0	1		
1111 - 1305	F650..LO		BLACK(TRIM4#),W/O(AUDIO SW)		45102-BZ270-C0	1		
1305 - 1507	F650..STD		BLACK(TRIM1#),W/O(AUDIO SW)		45102-BZ340-C0	1		
1305 - 1507	F651		BLACK(TRIM4#),W/O(AUDIO SW)		45102-BZ400-C0	1		
1305 - 1507	F650..LO		BLACK(TRIM4#),W/O(AUDIO SW)		45102-BZ400-C0	1		
1507 - 1607	F650..STD		BLACK(TRIM1#),W/O(AUDIO SW)		45102-BZ500-C0	1		
1507 - 1607	F650..LO		BLACK(TRIM4#),W/O(AUDIO SW)		45102-BZ500-C0	1		
1507 - 1809	F653		BLACK(TRIM4#),W/O(AUDIO SW)		45102-BZ510-C0	1		
1610 - 1809	F653..LO..5F	B2AE	INDONESIA TAXI,BLACK(TRIM4#),W/O(AUDIO SW)		45102-BZ500-C0	1		
1809 - 1901	F653..LO..5F	B2AE	INDONESIA TAXI,BLACK(TRIM4#),W/O(AUDIO SW)		45102-BZ500-C2	1		
1809 - 1901	F653		SILVER(TRIM4#),W/O(AUDIO SW)		45102-BZ510-C1	1		
1901 -	F653..LO..5F	B2AE	INDONESIA TAXI,BLACK(TRIM4#)		45102-BZ500-C2	1		
1901 -	F653..LO		SILVER(TRIM4#)		45102-BZ510-C1	1		
1901 -	F65#..STD		SILVER(TRIM4#)		45102-BZ520-C1	1		
	+----------+							
	| 45107 | WIRE SUB-ASSY, HORN BUTTON							
	+----------+							
1305 - 1405	F65#		L=95		45107-BZ080-	1		6
1405 - 1507	F65#		L=129		45107-BZ081-	1	7	

FIG.45-04 STEERING WHEEL

PROD_DATE	MODELS	SPEC CODE	DESCRIPTION	R/P	PART NUMBER	QYT	REV_REF FR	REV_REF TO
	+----------+							
	| 45107 | WIRE SUB-ASSY, HORN BUTTON							
	CONTINUED--+							
1507 - 1901	F65#				45107-B2050-	1		
1901 -	F653..LO				45107-B2050-	1		
	+----------+							
	| 45130 | BUTTON ASSY, HORN							
	+----------+							
1111 - 1208	F650..STD		BLACK(TRIM1#)		45130-BZ300-C0	1		
1111 - 1208	F651		BLACK(TRIM4#)		45130-BZ300-C0	1		
1111 - 1208	F650..LO		BLACK(TRIM4#)		45130-BZ300-C0	1		
1209 - 1305	F650..STD		BLACK(TRIM1#)		45130-BZ301-C0	1		
1209 - 1305	F651		BLACK(TRIM4#)		45130-BZ301-C0	1		
1209 - 1305	F650..LO		BLACK(TRIM4#)		45130-BZ301-C0	1		
1305 - 1405	F650..STD		BLACK(TRIM1#)		45130-BZ400-C0	1		6
1305 - 1405	F651		BLACK(TRIM4#)		45130-BZ420-C0	1		6
1305 - 1405	F650..LO		BLACK(TRIM4#)		45130-BZ420-C0	1		6
1405 - 1507	F650..STD		BLACK(TRIM1#)		45130-BZ401-C0	1	7	
1405 - 1507	F651		BLACK(TRIM4#)		45130-BZ421-C0	1	7	
1405 - 1507	F650..LO		BLACK(TRIM4#)		45130-BZ421-C0	1	7	
1507 - 1607	F650..STD		BLACK(TRIM1#)		45130-BZ560-C0	1		
1507 - 1901	F653		BLACK(TRIM4#)		45130-BZ560-C0	1		
1507 - 1901	F650..LO		BLACK(TRIM4#)		45130-BZ560-C0	1		
1901 -	F65#		BLACK(TRIM4#)		45130-BZ560-C0	1		
	+----------+							
	| 45201P | NUT, STEERING WHEEL SET							
	+----------+							
1111 - 1507	F65#				9004A-17176-	1		
				#	(90041-70014-)	1		
1507 - 1901	F65#				9004A-17176-	1		
				#	(90041-70014-)	1		
1901 -	F65#				9004A-17176-	1		
				#	(90041-70014-)	1		

FIG.45-05 FRONT STEERING GEAR & LINK

(1111-)

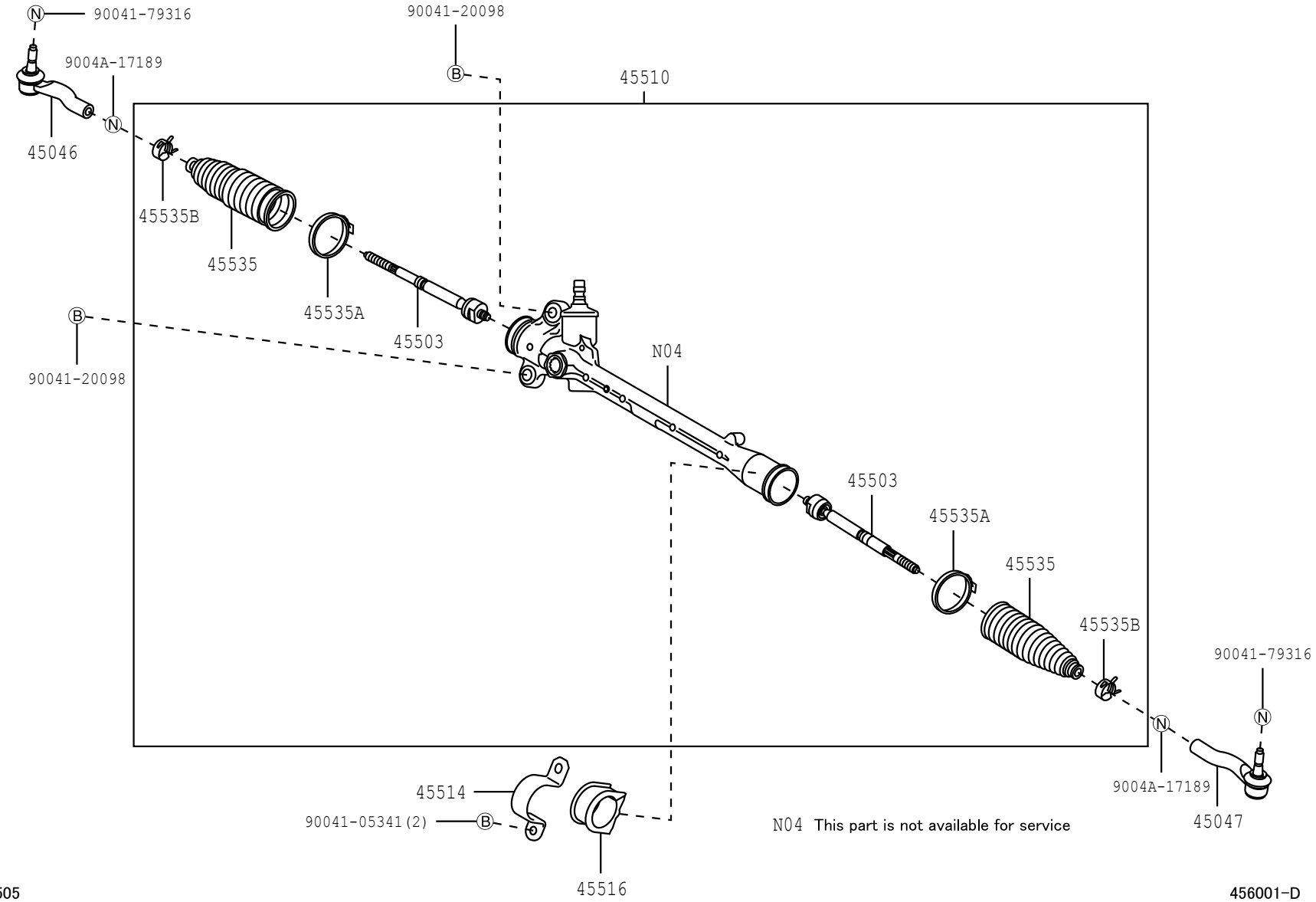

N04 This part is not available for service

4505

456001-D

PROD_DATE	MODELS	SPEC CODE	DESCRIPTION	R/P	PART NUMBER	QYT	REV_REF FR	REV_REF TO
	+----------+							
	| 45046 | END SUB-ASSY, TIE ROD, RH							
	+----------+							
1111 - 1507	F65#				45046-BZ120-	1		
1507 - 1811	F65#				45046-BZ120-	1		
1812 - 1901	F653				45046-BZ240-	1		
1901 -	F65#				45046-BZ240-	1		
	+----------+							
	| 45047 | END SUB-ASSY, TIE ROD, LH							
	+----------+							
1111 - 1507	F65#				45047-BZ120-	1		
1507 - 1811	F65#				45047-BZ120-	1		
1812 - 1901	F653				45047-BZ140-	1		
1901 -	F65#				45047-BZ140-	1		
	+----------+							
	| 45503 | END SUB-ASSY, STEERING RACK							
	+----------+							
1111 - 1507	F65#				45503-BZ120-	2		
1507 - 1811	F65#				45503-BZ120-	2		
1812 - 1901	F653				45503-BZ220-	2		
1901 -	F65#				45503-BZ220-	2		
	+----------+							
	| 45510 | GEAR ASSY, STEERING							
	+----------+							
1111 - 1507	F650				45510-BZ110-	1		
1111 - 1507	F651				45510-BZ160-	1		
1507 - 1607	F650				45510-BZ240-	1		
1507 - 1811	F653				45510-BZ250-	1		
1812 - 1901	F653				45510-BZ410-	1		
1901 -	F653				45510-BZ410-	1		
1901 -	F654				45510-BZ420-	1		
	+----------+							
	| 45514 | BRACKET, STEERING RACK HOUSING, NO.1							
	+----------+							
1111 - 1507	F65#				45514-BZ120-	1		

FIG.45-05 FRONT STEERING GEAR & LINK

PROD_DATE	MODELS	SPEC CODE	DESCRIPTION	R/P	PART NUMBER	QYT	REV_REF FR	REV_REF TO
	+----------+							
	| 45514 | BRACKET, STEERING RACK HOUSING, NO.1							
	CONTINUED--+							
1507 - 1607	F650				45514-BZ120-	1		
1507 - 1901	F653				45514-BZ120-	1		
1901 -	F65#				45514-BZ120-	1		
	+----------+							
	| 45516 | GROMMET, STEERING RACK HOUSING, NO.1							
	+----------+							
1111 - 1507	F65#				45516-BZ120-	1		
1507 - 1607	F650				45516-BZ120-	1		
1507 - 1901	F653				45516-BZ120-	1		
1901 -	F65#				45516-BZ120-	1		
	+----------+							
	| 45535 | BOOT, STEERING RACK, NO.1							
	+----------+							
1111 - 1507	F65#				45535-BZ070-	2		
1507 - 1901	F65#				45535-BZ070-	2		
1901 -	F65#				45535-BZ070-	2		
	+----------+							
	| 45535A | CLAMP(FOR STEERING RACK BOOT)							
	+----------+							
1111 - 1507	F65#				45538-BZ020-	2		
1507 - 1901	F65#				45538-BZ020-	2		
1901 -	F65#				45538-BZ020-	2		
	+----------+							
	| 45535B | CLIP(FOR STEERING RACK BOOT)							
	+----------+							
1111 - 1507	F65#				9004A-46138-	2		
1507 - 1901	F65#				9004A-46138-	2		
1901 -	F65#				9004A-46138-	2		

FIG.46-01 PARKING BRAKE & CABLE

(1111-1712)

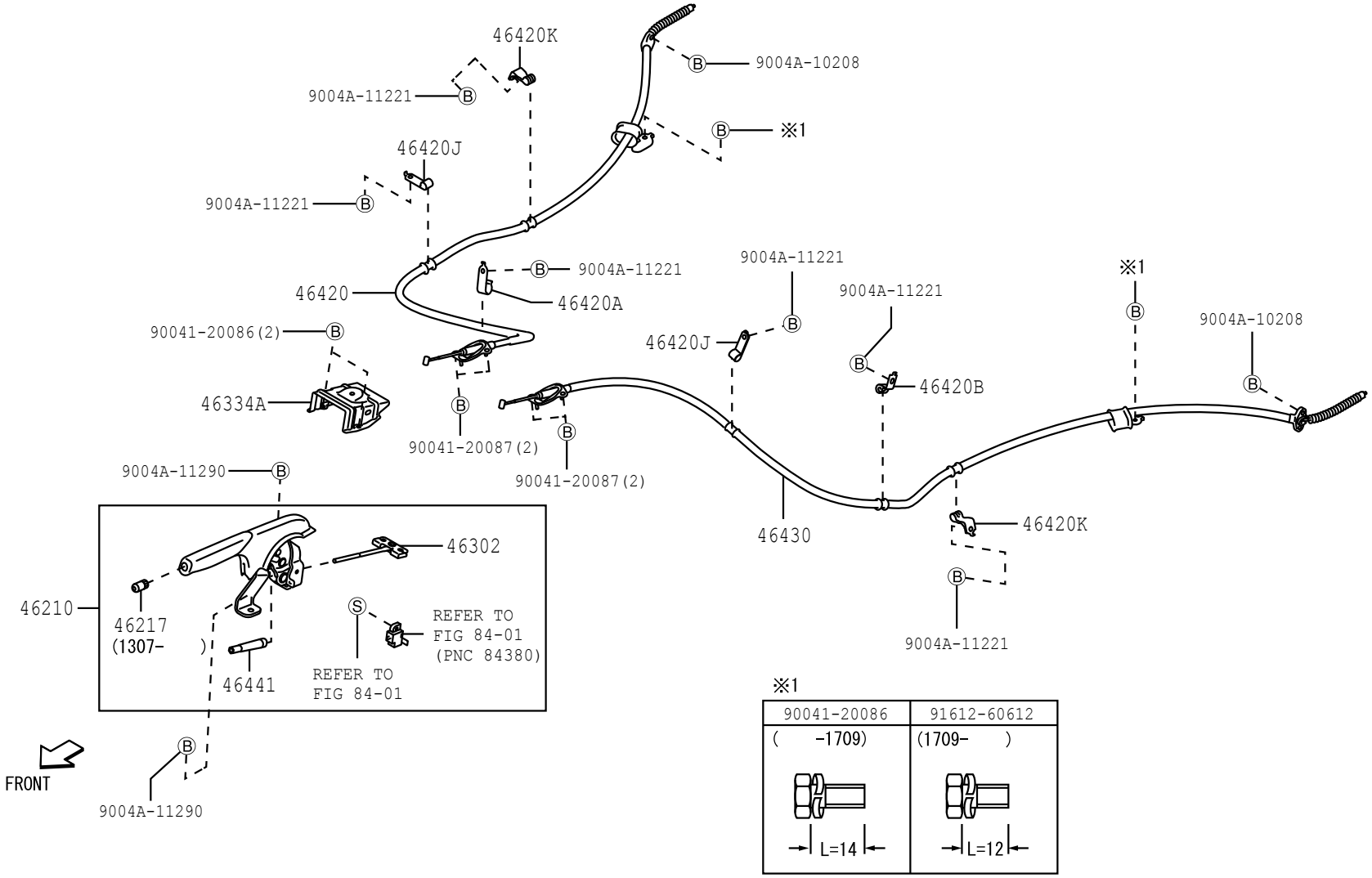

4601

461242-F

FIG.46-01 PARKING BRAKE & CABLE

(1712-)

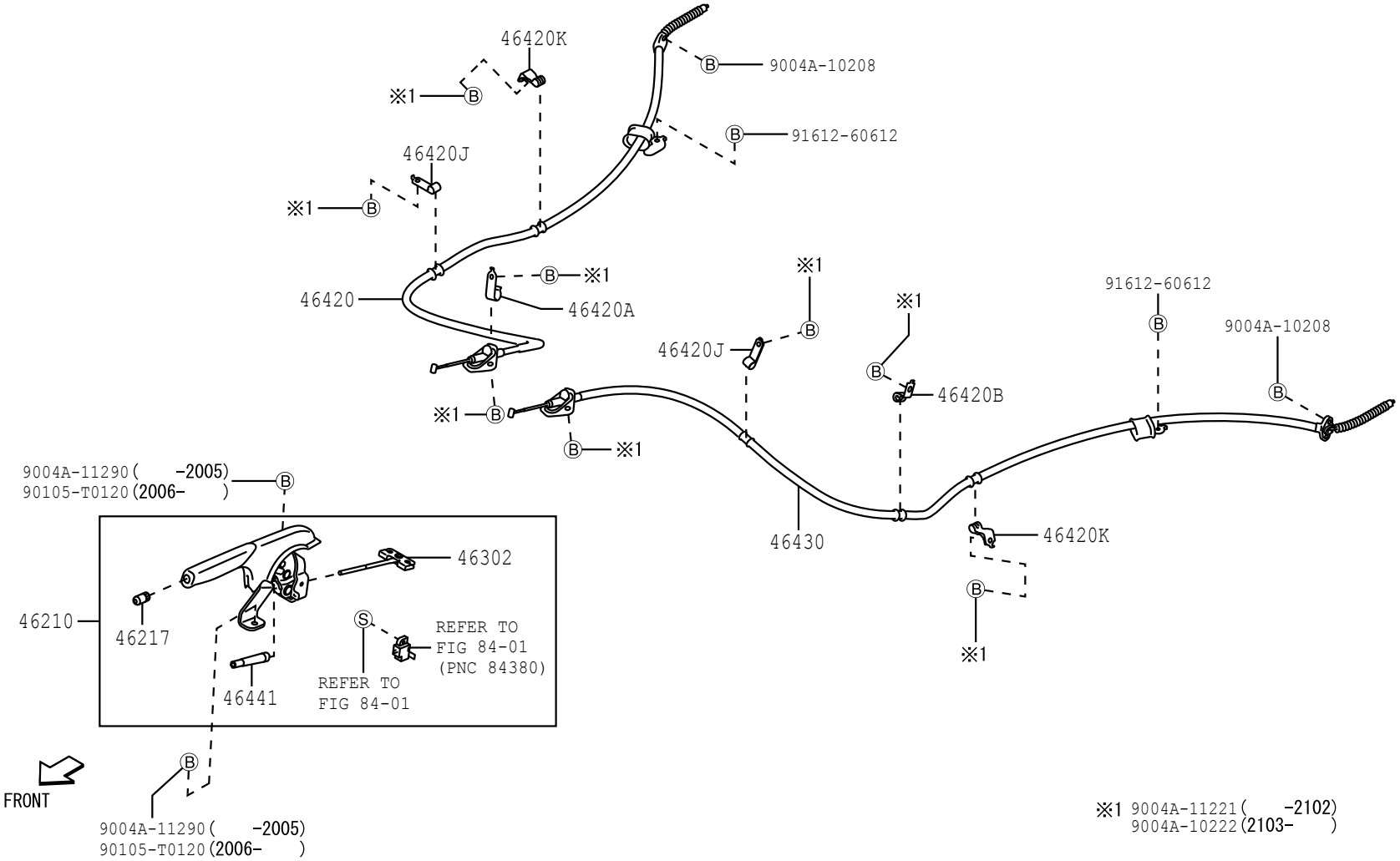

4601

461597-B

PROD_DATE	MODELS	SPEC CODE	DESCRIPTION	R/P	PART NUMBER	QYT	REV_REF FR	REV_REF TO
	+----------+							
	| 46210 | LEVER ASSY, PARKING BRAKE							
	+----------+							
1111 - 1304	F651..STD		BLACK(TRIM4#)		46210-BZ041-C0	1		
1111 - 1304	F65#..LO		BLACK(TRIM4#)		46210-BZ080-C0	1		
1111 - 1507	F650..STD		BLACK(TRIM1#)		46210-BZ041-C0	1		
1305 - 1507	F65#..LO		BLACK(TRIM4#)		46210-BZ150-C0	1		
1305 - 1507	F651..STD		BLACK(TRIM4#)		46210-BZ160-C0	1		
1507 - 1607	F650..STD		BLACK(TRIM1#)		46210-BZ041-C0	1		
1507 - 1712	F65#..LO		BLACK(TRIM4#)		46210-BZ080-C0	1		
1507 - 1712	F653..STD		BLACK(TRIM4#)		46210-BZ150-C0	1		
1712 - 1901	F653..LO		BLACK(TRIM4#)		46210-BZ080-C1	1		
1712 - 1901	F653..STD		BLACK(TRIM4#)		46210-BZ150-C1	1		
1901 -	F653..LO		BLACK(TRIM4#)		46210-BZ080-C1	1		
1901 -	F65#..STD		BLACK(TRIM4#)		46210-BZ150-C1	1		
	+----------+							
	| 46217 | KNOB, PARKING BRAKE RELEASE ROD							
	+----------+							
1307 - 1507	F651				46217-BZ010-	1		
1307 - 1507	F650..LO				46217-BZ010-	1		
1307 - 1507	F650..STD		BLACK(TRIM1#)		46217-BZ040-C0	1		
1507 - 1607	F650..STD		BLACK(TRIM1#)		46217-BZ040-C0	1		
1507 - 1712	F65#..LO		BLACK(TRIM4#)		46217-BZ040-C0	1		
1507 - 1901	F653..STD				46217-BZ010-	1		
1712 - 1901	F653..LO		BLACK(TRIM4#)		46217-BZ040-C1	1		
1901 -	F65#..STD				46217-BZ010-	1		
1901 -	F653..LO		BLACK(TRIM4#)		46217-BZ040-C1	1		
	+----------+							
	| 46302 | ROD SUB-ASSY, PARKING BRAKE PULL, NO.1							
	+----------+							
1111 - 1507	F65#				46302-87Z03-	1		
1507 - 1901	F65#				46302-87Z03-	1		

FIG.46-01 PARKING BRAKE & CABLE

PROD_DATE	MODELS	SPEC CODE	DESCRIPTION	R/P	PART NUMBER	QYT	REV_REF FR	REV_REF TO
	+----------+							
	| 46302 | ROD SUB-ASSY, PARKING BRAKE PULL, NO.1							
	CONTINUED--+							
1901 -	F65#				46302-87Z03-	1		
	+----------+							
	| 46334A | PROTECTOR, PARKING BRAKE CABLE JOINT							
	+----------+							
1111 - 1507	F65#				46334-BZ010-	1		
1507 - 1712	F65#				46334-BZ010-	1		
	+----------+							
	| 46420 | CABLE ASSY, PARKING BRAKE, NO.2							
	+----------+							
1111 - 1507	F65#				46420-BZ110-	1		
1507 - 1607	F650				46420-BZ110-	1		
1507 - 1712	F653				46420-BZ110-	1		
1712 - 1901	F653				46420-BZ250-	1		
1901 -	F65#				46420-BZ250-	1		
	+----------+							
	| 46420A | CLAMP, NO.1(FOR PARKING BRAKE CABLE)							
	+----------+							
1111 - 1507	F65#				46467-BZ010-	1		
1507 - 1607	F650				46467-BZ010-	1		
1507 - 1901	F653				46467-BZ010-	1		
1901 -	F65#				46467-BZ010-	1		
	+----------+							
	| 46420B | CLAMP, NO.2(FOR PARKING BRAKE CABLE)							
	+----------+							
1111 - 1507	F65#				9004A-46126-	1		
1507 - 1607	F650				9004A-46126-	1		
1507 - 1901	F653				9004A-46126-	1		
1901 -	F65#				9004A-46126-	1		
	+----------+							
	| 46420J | CLAMP, NO.3(FOR PARKING BRAKE CABLE)							
	+----------+							
1111 - 1507	F65#				9004A-46133-	2		
1507 - 1607	F650				9004A-46133-	2		

PROD_DATE	MODELS	SPEC CODE	DESCRIPTION	R/P	PART NUMBER	QYT	REV_REF FR	REV_REF TO
	+----------+							
	| 46420J | CLAMP, NO.3(FOR PARKING BRAKE CABLE)							
	CONTINUED--+							
1507 - 1901	F653				9004A-46133-	2		
1901 -	F65#				9004A-46133-	2		
	+----------+							
	| 46420K | CLAMP, NO.4(FOR PARKING BRAKE CABLE)							
	+----------+							
1111 - 1507	F65#				9004A-46289-	2		
1507 - 1607	F650				9004A-46289-	2		
1507 - 1901	F653				9004A-46289-	2		
1901 -	F65#				9004A-46289-	2		
	+----------+							
	| 46430 | CABLE ASSY, PARKING BRAKE, NO.3							
	+----------+							
1111 - 1507	F65#				46430-BZ100-	1		
1507 - 1607	F650				46430-BZ100-	1		
1507 - 1712	F653				46430-BZ100-	1		
1712 - 1901	F653				46430-BZ250-	1		
1901 -	F65#				46430-BZ250-	1		
	+----------+							
	| 46441 | NUT, WIRE ADJUSTING, NO.1							
	+----------+							
1111 - 1507	F65#				46441-87Z04-	1		
1507 - 1901	F65#				46441-87Z04-	1		
1901 -	F65#				46441-87Z04-	1		

FIG. 47-01 BRAKE PEDAL & BRACKET

(1111-1305)

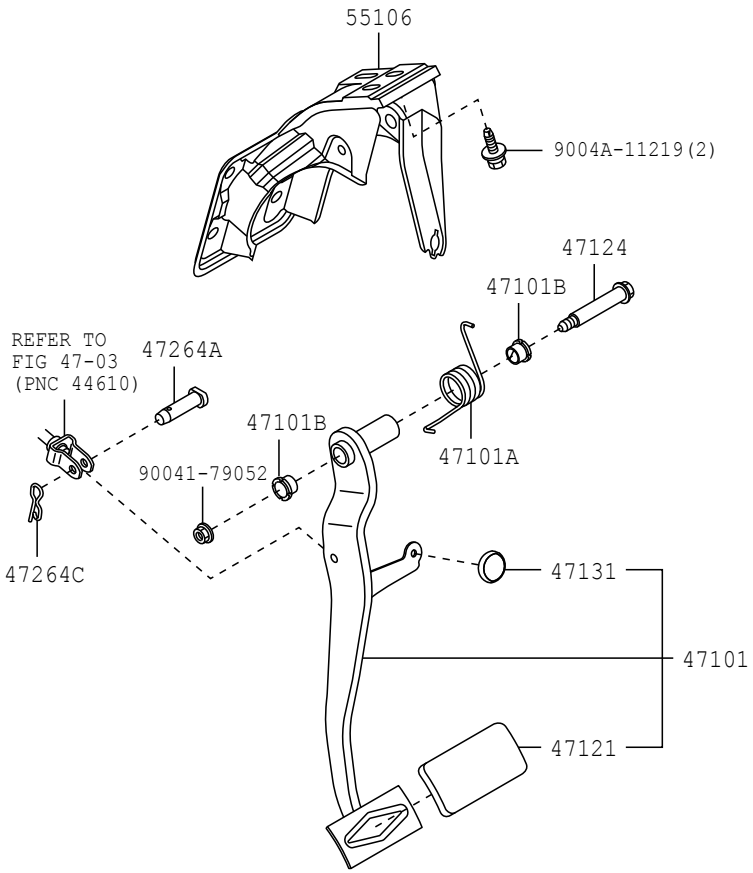

4701

477967

FIG. 47-01 BRAKE PEDAL & BRACKET

(1305-)

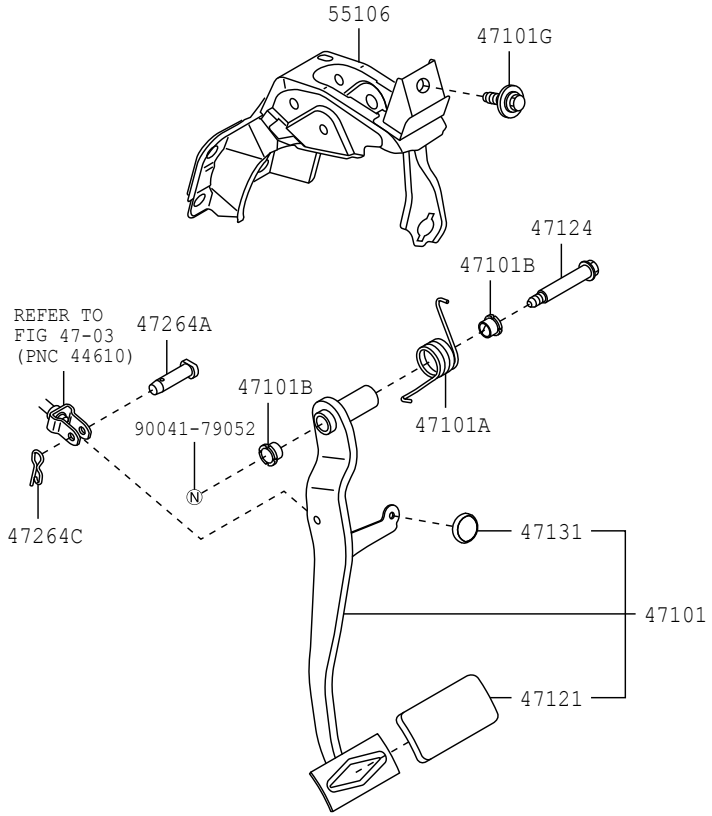

4701

479018

PROD_DATE	MODELS	SPEC CODE	DESCRIPTION	R/P	PART NUMBER	QYT	REV_REF FR	REV_REF TO
	+----------+							
	| 47101 | PEDAL SUB-ASSY, BRAKE							
	+----------+							
1111 - 1305	F65#..5F				47110-BZ180-	1		
1111 - 1305	F651..E4AT				47110-BZ190-	1		
1305 - 1507	F65#..5F				47110-BZ181-	1		
1305 - 1507	F651..E4AT				47110-BZ191-	1		
1507 - 1607	F650				47110-BZ181-	1		
1507 - 1901	F653..5F				47110-BZ181-	1		
1507 - 1901	F653..E4AT				47110-BZ191-	1		
1901 -	F65#..5F				47110-BZ181-	1		
1901 -	F65#..E4AT				47110-BZ191-	1		
	+----------+							
	| 47101A | SPRING(FOR BRAKE PEDAL RETURN)							
	+----------+							
1111 - 1305	F65#				47146-BZ010-	1		
1305 - 1507	F65#				47146-BZ050-	1		
	+----------+							
	| 47101B | BUSH(FOR BRAKE PEDAL)							
	+----------+							
1111 - 1507	F65#				9004A-38021-	2		
1507 - 1607	F650				9004A-38021-	2		
1507 - 1901	F653				9004A-38021-	2		
1901 -	F65#				9004A-38021-	2		
	+----------+							
	| 47101G | BOLT, BRAKE PEDAL STOP, NO.1							
	+----------+							
1305 - 1507	F65#				90041-20255-	1		
1507 - 1607	F650				90041-20255-	1		
1507 - 1901	F653				90041-20255-	1		
1901 -	F65#				90041-20255-	1		
	+----------+							
	| 47121 | PAD, BRAKE PEDAL							
	+----------+							
1111 - 1507	F65#..5F				31321-BZ010-	1		

FIG.47-01 BRAKE PEDAL & BRACKET

PROD_DATE	MODELS	SPEC CODE	DESCRIPTION	R/P	PART NUMBER	QYT	REV_REF FR	REV_REF TO
	+----------+							
	| 47121 | PAD, BRAKE PEDAL							
	CONTINUED--+							
1111 - 1507	F651..E4AT				47121-BZ010-	1		
1507 - 1607	F650				31321-BZ010-	1		
1507 - 1901	F653..5F				31321-BZ010-	1		
1507 - 1901	F653..E4AT				47121-BZ010-	1		
1901 -	F65#..5F				31321-BZ010-	1		
1901 -	F65#..E4AT				47121-BZ010-	1		
	+----------+							
	| 47124 | SHAFT, BRAKE PEDAL							
	+----------+							
1111 - 1305	F65#				47124-BZ020-	1		
1305 - 1507	F65#				47124-BZ030-	1		
1507 - 1607	F650				47124-BZ030-	1		
1507 - 1901	F653				47124-BZ030-	1		
1901 -	F65#				47124-BZ030-	1		
	+----------+							
	| 47131 | CUSHION(FOR STOP LAMP SWITCH)							
	+----------+							
1111 - 1507	F65#				9004A-54003-	1		
1507 - 1607	F650				9004A-54003-	1		
1507 - 1901	F653				9004A-54003-	1		
1901 -	F65#				9004A-54003-	1		
	+----------+							
	| 47264A | PIN(FOR PUSH ROD)							
	+----------+							
1111 - 1210	F65#				90042-40075-	1		
1211 - 1507	F65#				90042-40151-	1		
1507 - 1607	F650				90042-40151-	1		
1507 - 1901	F653				90042-40151-	1		
1901 -	F65#				90042-40151-	1		

FIG.47-01 BRAKE PEDAL & BRACKET

PROD_DATE	MODELS	SPEC CODE	DESCRIPTION	R/P	PART NUMBER	QYT	REV_REF FR	REV_REF TO
	+----------+							
	| 47264C | CLIP(FOR PUSH ROD CLEVIS PIN)							
	+----------+							
1111 - 1210	F65#				90044-68337-	1		
1211 - 1507	F65#				90044-68076-	1		
1507 - 1607	F650				90044-68076-	1		
1507 - 1901	F653				90044-68076-	1		
1901 -	F65#				90044-68076-	1		
	+----------+							
	| 55106 | SUPPORT SUB-ASSY, BRAKE PEDAL							
	+----------+							
1111 - 1305	F65#				55106-BZ290-	1		
1305 - 1507	F65#				55106-BZ330-	1		
1507 - 1607	F650				55106-BZ330-	1		
1507 - 1901	F653				55106-BZ330-	1		
1901 -	F65#				55106-BZ330-	1		

(1111-)

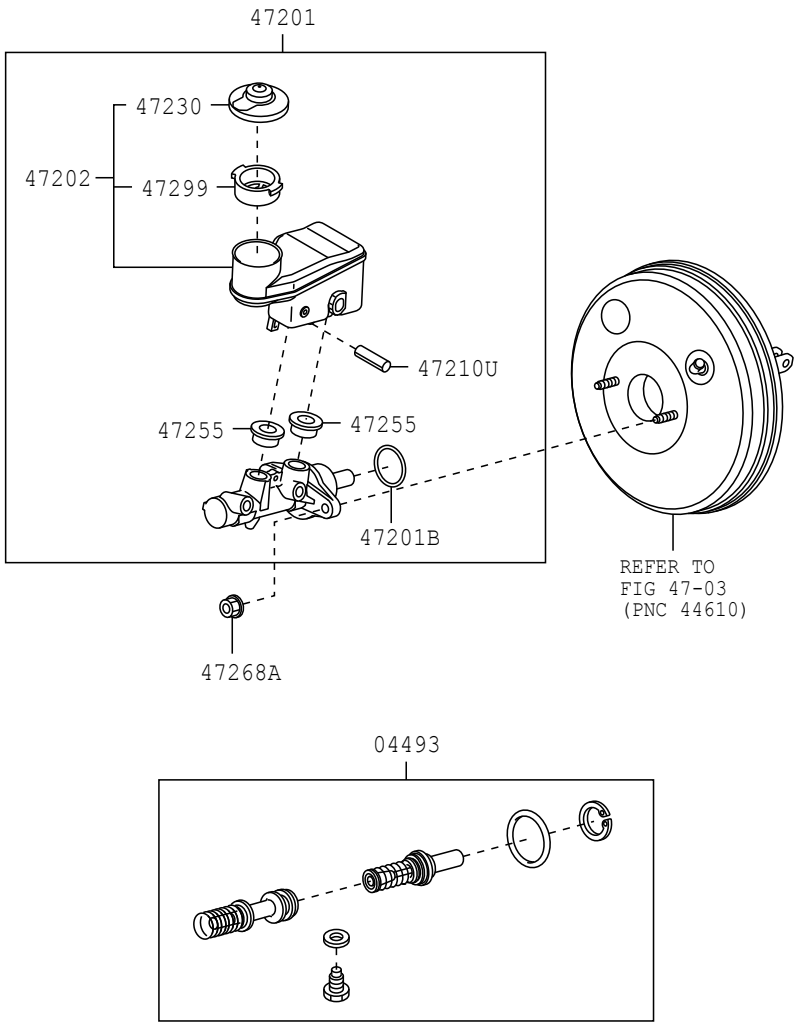

4702

477969-B

FIG.47-02 BRAKE MASTER CYLINDER

PROD_DATE	MODELS	SPEC CODE	DESCRIPTION	R/P	PART NUMBER	QYT	REV_REF FR	REV_REF TO
	04493	CYLINDER KIT, BRAKE MASTER						
1111 - 1507	F65#				04493-B1040-	1		
	47201	CYLINDER SUB-ASSY, BRAKE MASTER						
1111 - 1507	F65#				47201-BZ120-	1		
1507 - 1607	F650		TYPE A		47201-BZ530-	1		
1507 - 1901	F653..5F		TYPE A		47201-BZ530-	1		
1507 - 1901	F653..E4AT		TYPE D		47201-BZ530-	1		
1901 -	F65#..E4AT		TYPE D		47201-BZ530-	1		
1901 -	F653..5F		TYPE A		47201-BZ530-	1		
1901 -	F654..5F		TYPE B		47201-BZ560-	1		
	47201B	RING, O(FOR BRAKE MASTER CYLINDER)						
1111 - 1507	F65#				9004A-30021-	1		
1507 - 1607	F650				90043-01352-	1		
1507 - 1901	F653				90043-01352-	1		
1901 -	F65#				90043-01352-	1		
	47202	RESERVOIR SUB-ASSY, BRAKE MASTER CYLINDER						
1111 - 1507	F65#				47220-BZ020-	1		
1507 - 1607	F650				47220-BZ280-	1		
1507 - 1901	F653				47220-BZ280-	1		
1901 -	F653				47220-BZ280-	1		
1901 -	F654..E4AT				47220-BZ280-	1		
1901 -	F654..5F				47220-BZ290-	1		
	47210U	PIN, STRAIGHT(FOR BRAKE MASTER CYLINDER)						
1111 - 1507	F65#				9004A-24023-	1		
1507 - 1607	F650				90042-43029-	1		

PROD_DATE	MODELS	SPEC CODE	DESCRIPTION	R/P	PART NUMBER	QYT	REV_REF FR	REV_REF TO
	+----------+							
	| 47210U | PIN, STRAIGHT(FOR BRAKE MASTER CYLINDER)							
	CONTINUED--+							
1507 - 1901	F653				90042-43029-	1		
1901 -	F65#				90042-43029-	1		
	+----------+							
	| 47230 | CAP ASSY, BRAKE MASTER CYLINDER RESERVOIR FILLER							
	+----------+							
1111 - 1501	F65#				47230-BZ020-	1		
				#	(47230-BZ130-)	1		
1502 - 1506	F65#				47230-BZ021-	1		
				#	(47230-BZ130-)	1		
1507 - 1607	F650				47230-BZ130-	1		
1507 - 1901	F653				47230-BZ130-	1		
1901 -	F65#				47230-BZ130-	1		
	+----------+							
	| 47255 | GROMMET, MASTER CYLINDER RESERVOIR							
	+----------+							
1111 - 1507	F65#				47255-BZ010-	2		
1507 - 1607	F650				47255-BZ110-	2		
1507 - 1901	F653				47255-BZ110-	2		
1901 -	F65#				47255-BZ110-	2		
	+----------+							
	| 47268A | NUT, BRAKE MASTER CYLINDER							
	+----------+							
1111 - 1507	F65#				9004A-17135-	2		
1507 - 1607	F650				90041-79124-	2		
1507 - 1901	F653				90041-79124-	2		
1901 -	F65#				90041-79124-	2		
	+----------+							
	| 47299 | STRAINER, BRAKE MASTER CYLINDER RESERVOIR							
	+----------+							
1111 - 1507	F65#				47299-BZ010-	1		
1507 - 1607	F650				47299-BZ090-	1		
1507 - 1901	F653				47299-BZ090-	1		
1901 -	F65#				47299-BZ090-	1		

(1111-1507)

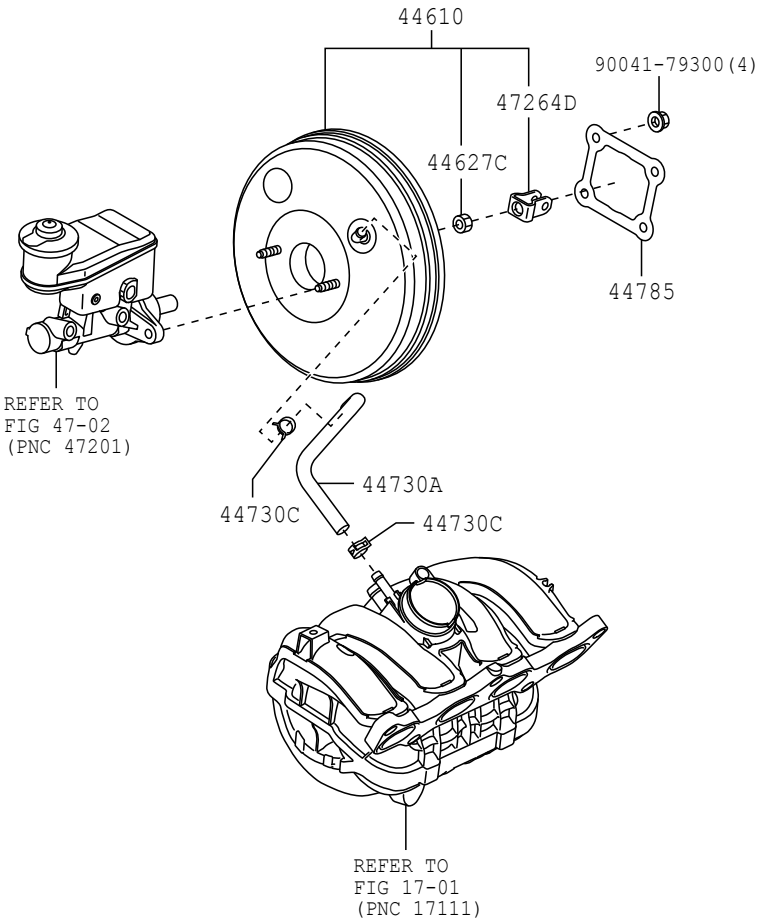

4703

477972-A

(1507-)F653,654

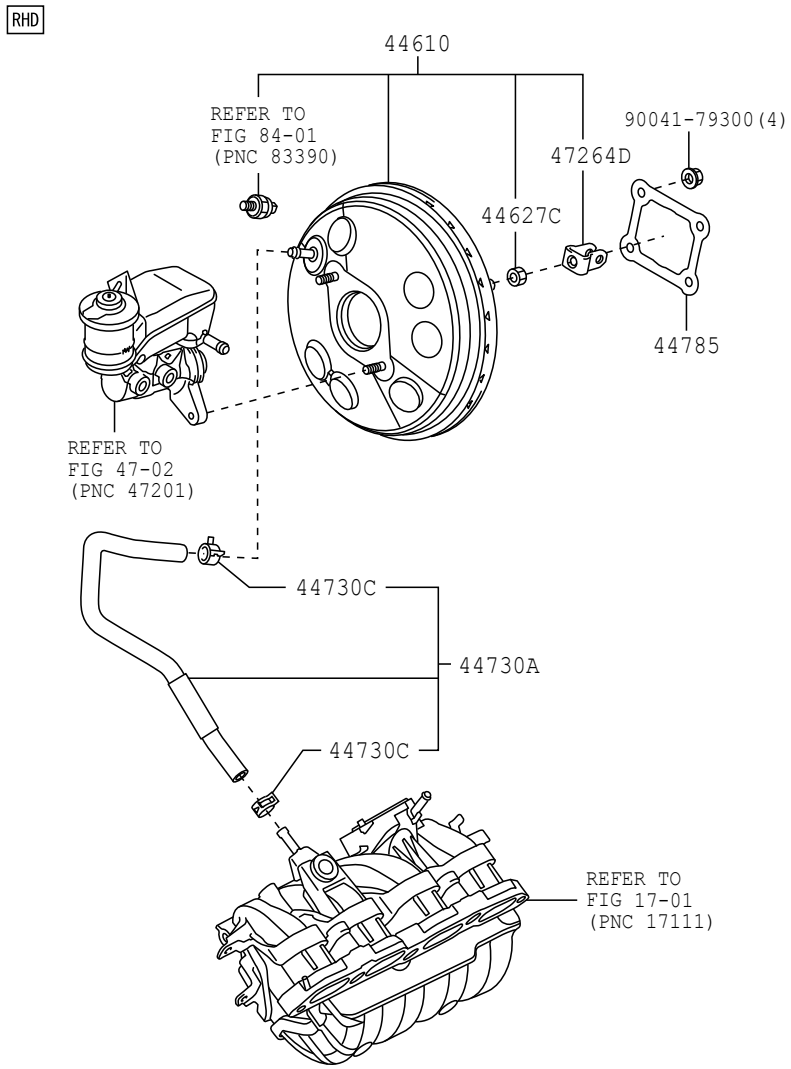

4703

479931

(1507-)F650

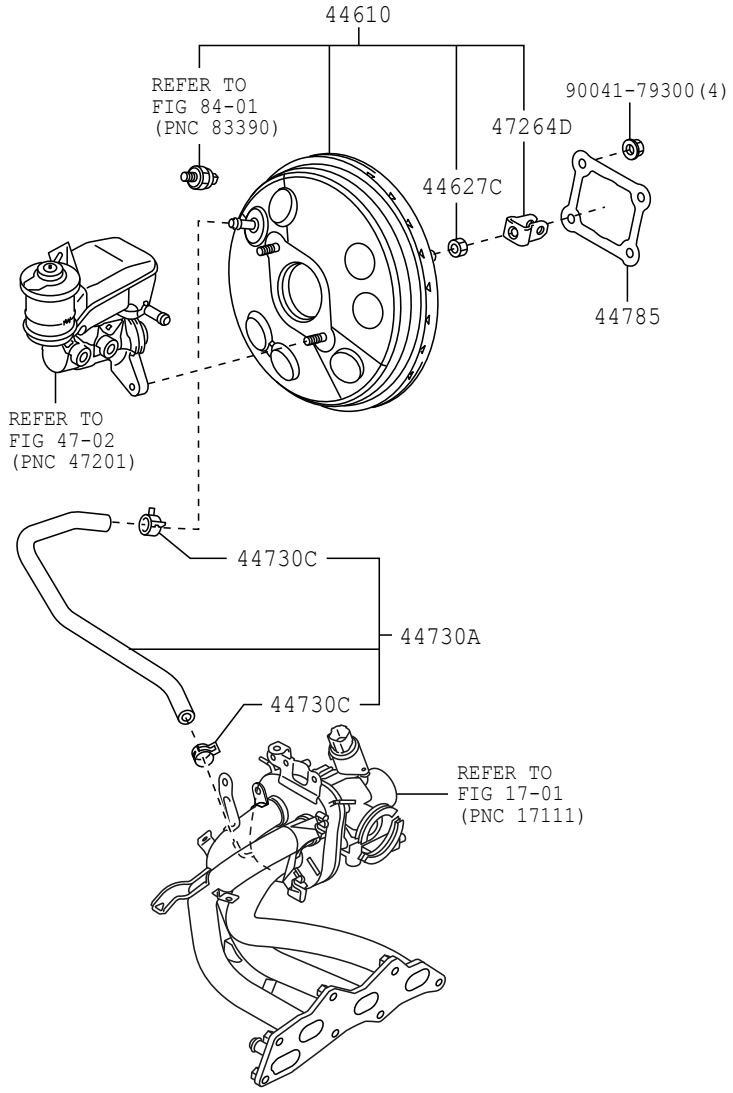

4703 479932

FIG.47-03 BRAKE BOOSTER & VACUUM TUBE

PROD_DATE	MODELS	SPEC CODE	DESCRIPTION	R/P	PART NUMBER	QYT	REV_REF FR	REV_REF TO
	+----------+							
	| 44610 | BOOSTER ASSY, BRAKE							
	+----------+							
1111 - 1507	F65#				44610-BZ230-	1		
1507 - 1607	F650				44610-BZ510-	1		
1507 - 1901	F653..5F				44610-BZ510-	1		
1507 - 1901	F653..E4AT				44610-BZ590-	1		
1901 -	F65#..5F				44610-BZ510-	1		
1901 -	F65#..E4AT				44610-BZ590-	1		
	+----------+							
	| 44627C | NUT, BOOSTER SLEEVE CYLINDER							
	+----------+							
1111 - 1507	F65#				9004A-17214-	1		
1507 - 1607	F650				9004A-17229-	1		
1507 - 1901	F653				9004A-17229-	1		
1901 -	F65#				9004A-17229-	1		
	+----------+							
	| 44730A | HOSE, VACUUM, NO.1							
	+----------+							
1111 - 1507	F650				44750-B0070-	1		
1111 - 1507	F651				44750-B0080-	1		
1507 - 1607	F650				44750-BZ240-	1		
1507 - 1901	F653				44750-BZ250-	1		
1901 -	F65#				44750-BZ250-	1		
	+----------+							
	| 44730C | CLIP(FOR VACUUM HOSE)							
	+----------+							
1111 - 1507	F65#				90044-67161-	2		
1507 - 1607	F650				90044-67161-	2		
1507 - 1901	F653				90044-67161-	2		
1901 -	F65#				90044-67161-	2		

PROD_DATE	MODELS	SPEC CODE	DESCRIPTION	R/P	PART NUMBER	QYT	REV_REF FR	REV_REF TO
	+----------+							
	| 44785 | GASKET, BRAKE BOOSTER							
	+----------+							
1111 - 1507	F65#				47275-BZ010-	1		
				#	(47278-87703-)	1		
1507 - 1607	F650				47275-BZ010-	1		
				#	(47278-87703-)	1		
1507 - 1901	F653				47275-BZ010-	1		
				#	(47278-87703-)	1		
1901 -	F65#				47275-BZ010-	1		
				#	(47278-87703-)	1		
	+----------+							
	| 47264D | CLEVIS, BRAKE MASTER CYLINDER PUSH ROD							
	+----------+							
1111 - 1507	F65#				47264-BZ010-	1		
1507 - 1607	F650				47264-BZ120-	1		
1507 - 1901	F653				47264-BZ120-	1		
1901 -	F65#				47264-BZ120-	1		

FIG.47-05 FRONT DISC BRAKE CALIPER & DUST COVER

(1111-)

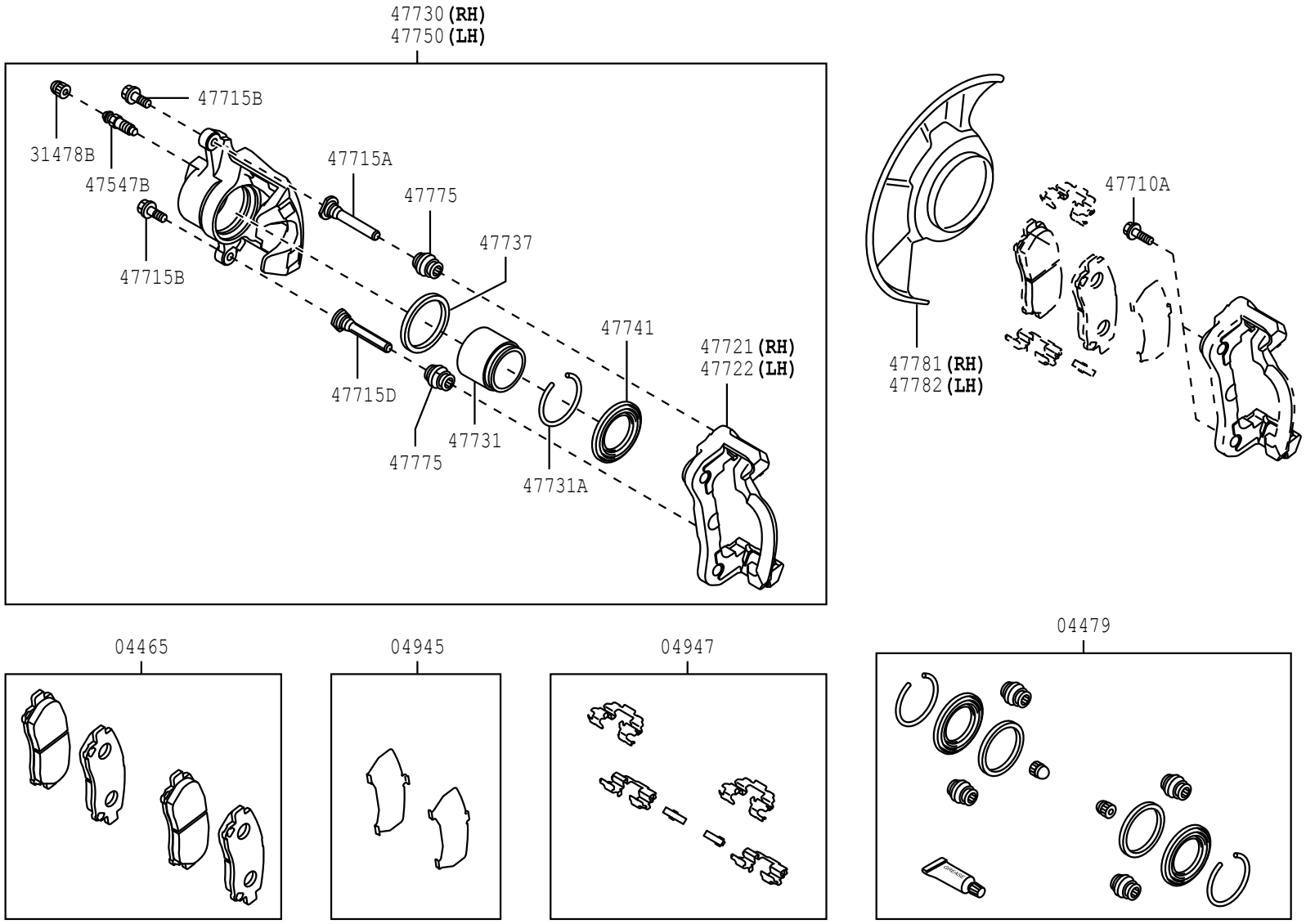

4705

477973-D

PROD_DATE	MODELS	SPEC CODE	DESCRIPTION	R/P	PART NUMBER	QYT	REV_REF FR	REV_REF TO
	+----------+							
	| 04465 | PAD KIT, DISC BRAKE, FRONT							
	+----------+							
1111 - 1407	F65#		MARK AK NS177H		04465-BZ010-	1		
1408 - 1507	F65#				04465-BZ170-	1		
1507 - 1607	F650				04465-BZ170-	1		
1507 - 1901	F653				04465-BZ170-	1		
1901 -	F65#				04465-BZ170-	1		
	+----------+							
	| 04479 | CYLINDER KIT, DISC BRAKE, FRONT							
	+----------+							
1111 - 1507	F65#				04478-BZ060-	1		
1507 - 1607	F650				04478-BZ060-	1		
1507 - 1901	F653				04478-BZ060-	1		
1901 -	F65#				04478-BZ060-	1		
	+----------+							
	| 04945 | SHIM KIT, ANTI SQUEAL, FRONT							
	+----------+							
1111 - 1507	F65#				04945-BZ010-	1		
1507 - 1607	F650				04945-BZ010-	1		
1507 - 1901	F653				04945-BZ010-	1		
1901 -	F65#				04945-BZ010-	1		
	+----------+							
	| 04947 | FITTING KIT, DISC BRAKE, FRONT							
	+----------+							
1111 - 1507	F65#				04947-BZ010-	1		
1507 - 1607	F650				04947-BZ010-	1		
1507 - 1901	F653				04947-BZ010-	1		
1901 -	F65#				04947-BZ010-	1		
	+----------+							
	| 31478B | CAP, BLEEDER PLUG(FOR FRONT DISC BRAKE)							
	+----------+							
1111 - 1507	F65#				47548-BZ010-	2		
1507 - 1607	F650				47548-BZ010-	2		
1507 - 1901	F653				47548-BZ010-	2		

FIG.47-05 FRONT DISC BRAKE CALIPER & DUST COVER

PROD_DATE	MODELS	SPEC CODE	DESCRIPTION	R/P	PART NUMBER	QYT	REV_REF FR	REV_REF TO
	+----------+							
	| 31478B | CAP, BLEEDER PLUG(FOR FRONT DISC BRAKE)							
	CONTINUED--+							
1901 -	F65#				47548-BZ010-	2		
	+----------+							
	| 47547B | PLUG, BLEEDER(FOR FRONT DISC BRAKE)							
	+----------+							
1111 - 1507	F65#				47547-BZ050-	2		
1507 - 1607	F650				47547-BZ050-	2		
1507 - 1901	F653				47547-BZ050-	2		
1901 -	F65#				47547-BZ050-	2		
	+----------+							
	| 47710A | BOLT, HEXAGON(FOR FRONT DISC BRAKE CALIPE							
	+----------+ R)							
1111 - 1507	F65#				90041-05228-	4		
1507 - 1607	F65#				90041-05228-	4		
1608 - 1901	F653				9004A-10171-	4		
				#	(90041-05228-)	1		
1901 -	F65#				9004A-10171-	4		
				#	(90041-05228-)	1		
	+----------+							
	| 47715A | PIN, FRONT DISC BRAKE CYLINDER SLIDE							
	+----------+							
1111 - 1507	F65#				47715-BZ120-	2		
1507 - 1607	F650				47715-BZ120-	2		
1507 - 1901	F653				47715-BZ120-	2		
1901 -	F65#				47715-BZ120-	2		
	+----------+							
	| 47715B | BOLT(FOR FRONT DISC BRAKE CYLINDER SLIDE)							
	+----------+							
1111 - 1507	F65#				9004A-10110-	4		
1507 - 1607	F650				9004A-10110-	4		
1507 - 1901	F653				9004A-10110-	4		
1901 -	F65#				9004A-10110-	4		

PROD_DATE	MODELS	SPEC CODE	DESCRIPTION	R/P	PART NUMBER	QYT	REV_REF FR	REV_REF TO
	47715D		PIN, FRONT DISC BRAKE CYLINDER SLIDE, NO. 2					
1111 - 1507	F65#				47715-BZ090-	2		
1507 - 1607	F650				47715-BZ090-	2		
1507 - 1901	F653				47715-BZ090-	2		
1901 -	F65#				47715-BZ090-	2		
	47721		MOUNTING, FRONT DISC BRAKE CYLINDER, RH					
1111 - 1507	F65#				47721-BZ010-	1		
1507 - 1607	F650				47721-BZ010-	1		
1507 - 1901	F653				47721-BZ010-	1		
1901 -	F65#				47721-BZ010-	1		
	47722		MOUNTING, FRONT DISC BRAKE CYLINDER, LH					
1111 - 1507	F65#				47721-BZ010-	1		
1507 - 1607	F650				47721-BZ010-	1		
1507 - 1901	F653				47721-BZ010-	1		
1901 -	F65#				47721-BZ010-	1		
	47730		CYLINDER ASSY, FRONT DISC BRAKE, RH					
1111 - 1507	F65#				47730-BZ011-	1		
1507 - 1607	F650				47730-BZ011-	1		
1507 - 1901	F653				47730-BZ011-	1		
1901 -	F65#				47730-BZ011-	1		
	47731		PISTON, FRONT DISC BRAKE					
1111 - 1507	F65#				47731-BZ010-	2		
1507 - 1607	F650				47731-BZ010-	2		
1507 - 1901	F653				47731-BZ010-	2		
1901 -	F65#				47731-BZ010-	2		

FIG.47-05 FRONT DISC BRAKE CALIPER & DUST COVER

PROD_DATE	MODELS	SPEC CODE	DESCRIPTION	R/P	PART NUMBER	QYT	REV_REF FR	REV_REF TO
	47731A		RING, SET(FOR FRONT DISC BRAKE PISTON)					
1111 - 1507	F65#				9004A-52006-	2		
1507 - 1607	F650				9004A-52006-	2		
1507 - 1901	F653				9004A-52006-	2		
1901 -	F65#				9004A-52006-	2		
	47737		SEAL, FRONT DISC BRAKE CYLINDER PISTON					
1111 - 1507	F65#				47737-BZ010-	2		
1507 - 1607	F650				47737-BZ010-	2		
1507 - 1901	F653				47737-BZ010-	2		
1901 -	F65#				47737-BZ010-	2		
	47741		BOOT, FRONT DISC BRAKE CYLINDER					
1111 - 1507	F65#				47741-BZ010-	2		
1507 - 1607	F650				47741-BZ010-	2		
1507 - 1901	F653				47741-BZ010-	2		
1901 -	F65#				47741-BZ010-	2		
	47750		CYLINDER ASSY, DISC BRAKE, LH					
1111 - 1507	F65#				47750-BZ011-	1		
1507 - 1607	F650				47750-BZ011-	1		
1507 - 1901	F653				47750-BZ011-	1		
1901 -	F65#				47750-BZ011-	1		
	47775		BOOT, BUSH DUST(FOR FRONT DISC BRAKE)					
1111 - 1507	F65#				47775-BZ010-	4		
1507 - 1607	F650				47775-BZ010-	4		
1507 - 1901	F653				47775-BZ010-	4		
1901 -	F65#				47775-BZ010-	4		

FIG.47-05 FRONT DISC BRAKE CALIPER & DUST COVER

PROD_DATE	MODELS	SPEC CODE	DESCRIPTION	R/P	PART NUMBER	QYT	REV_REF	
							FR	TO
	+----------+ | 47781 | COVER, DISC BRAKE DUST, FRONT RH +----------+							
1111 - 1507	F65#				47781-BZ090-	1		
1507 - 1607	F650				47781-BZ140-	1		
1507 - 1901	F653				47781-BZ140-	1		
1901 -	F65#				47781-BZ140-	1		
	+----------+ | 47782 | COVER, DISC BRAKE DUST, FRONT LH +----------+							
1111 - 1507	F65#				47782-BZ070-	1		
1507 - 1607	F650				47782-BZ090-	1		
1507 - 1901	F653				47782-BZ090-	1		
1901 -	F65#				47782-BZ090-	1		

FIG.47-06 REAR DRUM BRAKE WHEEL CYLINDER & BACKING PLATE

(1111-)

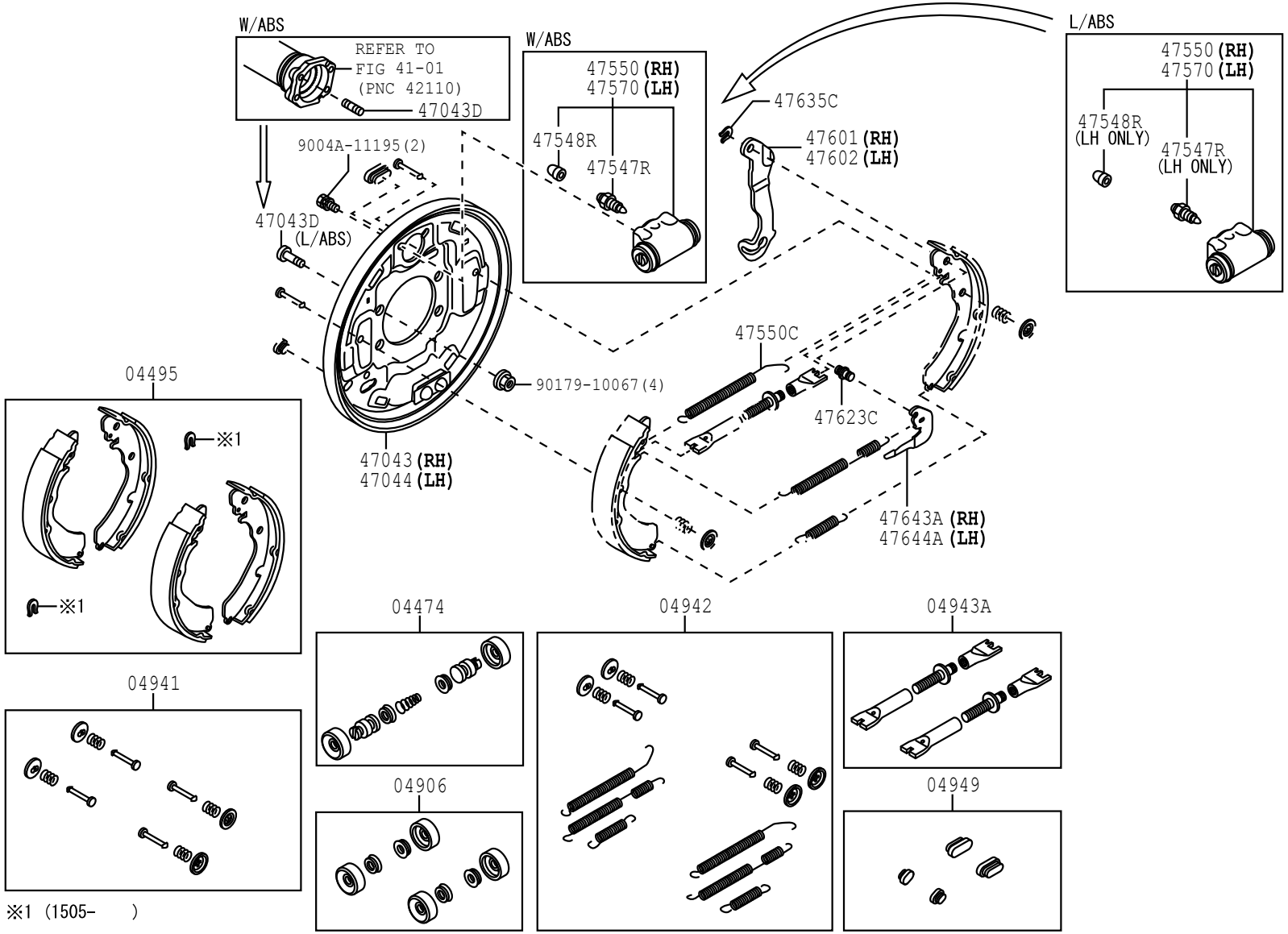

※1 (1505-)

4706

47A839-A

PROD_DATE	MODELS	SPEC CODE	DESCRIPTION	R/P	PART NUMBER	QYT	REV_REF FR	REV_REF TO
	+----------+							
	| 04474 |	CYLINDER KIT, REAR WHEEL						
	+----------+							
1111 - 1507	F65#				04474-B1040-	2		
1507 - 1607	F650				04474-B1040-	2		
1507 - 1901	F653				04474-B1040-	2		
1901 -	F65#				04474-B1040-	2		
	+----------+							
	| 04495 |	SHOE KIT, REAR BRAKE						
	+----------+							
1111 - 1504	F65#				04495-BZ010-	1		
1505 - 1507	F65#				04495-BZ011-	1		
1507 - 1607	F650				04495-BZ011-	1		
1507 - 1901	F653				04495-BZ011-	1		
1901 -	F65#				04495-BZ011-	1		
	+----------+							
	| 04906 |	CUP KIT, REAR WHEEL CYLINDER						
	+----------+							
1111 - 1507	F65#				04906-BZ020-	1		
1507 - 1607	F650				04906-BZ020-	1		
1507 - 1901	F653				04906-BZ020-	1		
1901 -	F65#				04906-BZ020-	1		
	+----------+							
	| 04941 |	SPRING KIT, REAR BRAKE SHOE HOLD DOWN						
	+----------+							
1111 - 1507	F65#				04941-BZ050-	1		
1507 - 1607	F650				04941-BZ050-	1		
1507 - 1901	F653				04941-BZ050-	1		
1901 -	F65#				04941-BZ050-	1		
	+----------+							
	| 04942 |	SPRING KIT, REAR BRAKE						
	+----------+							
1111 - 1507	F65#				04942-BZ060-	1		
1507 - 1607	F650				04942-BZ060-	1		
1507 - 1901	F653				04942-BZ060-	1		

FIG.47-06 REAR DRUM BRAKE WHEEL CYLINDER & BACKING PLATE

PROD_DATE	MODELS	SPEC CODE	DESCRIPTION	R/P	PART NUMBER	QYT	REV_REF FR	REV_REF TO
	+----------+							
	| 04942 |	SPRING KIT, REAR BRAKE						
	CONTINUED--+							
1901 -	F65#				04942-BZ060-	1		
	+----------+							
	| 04943A |	STRUT KIT, REAR BRAKE						
	+----------+							
1111 - 1507	F65#				04943-BZ040-	1		
1507 - 1607	F650				04943-BZ040-	1		
1507 - 1901	F653				04943-BZ040-	1		
1901 -	F65#				04943-BZ040-	1		
	+----------+							
	| 04949 |	PLUG KIT, REAR BRAKE						
	+----------+							
1111 - 1507	F65#				04949-BZ010-	1		
1507 - 1607	F650				04949-BZ010-	1		
1507 - 1901	F653				04949-BZ010-	1		
1901 -	F65#				04949-BZ010-	1		
	+----------+							
	| 47043 |	PLATE SUB-ASSY, BRAKE BACKING, REAR RH						
	+----------+							
1111 - 1507	F65#				47043-BZ031-	1		
1507 - 1607	F650				47043-BZ031-	1		
1507 - 1901	F653				47043-BZ031-	1		
1901 -	F65#				47043-BZ031-	1		
	+----------+							
	| 47043D |	BOLT(FOR BACKING PLATE TO REAR AXLE HOUSING SETTING)						
	+----------+							
1111 - 1507	F65#		*10-1.25PX40-18,L/ABS		42184-27010-	8		
1507 - 1607	F650		*10-1.25PX40-18,L/ABS		42184-27010-	8		
1507 - 1901	F653		*10-1.25PX40-18,L/ABS		42184-27010-	8		
1901 - 2007	F654		W/ABS		42184-97501- # (46791-B5150-)	8 1		

PROD_DATE	MODELS	SPEC CODE	DESCRIPTION	R/P	PART NUMBER	QYT	REV_REF FR	REV_REF TO
	+----------+							
	| 47043D | BOLT(FOR BACKING PLATE TO REAR AXLE HOUSING SETTING)							
	CONTINUED--+							
1901 -	F653		*10-1.25PX40-18,L/ABS		42184-27010-	8		
2007 -	F654		W/ABS		46791-B5150-	8		
	+----------+							
	| 47044 | PLATE SUB-ASSY, BRAKE BACKING, REAR LH							
	+----------+							
1111 - 1507	F65#				47044-BZ031-	1		
1507 - 1607	F650				47044-BZ031-	1		
1507 - 1901	F653				47044-BZ031-	1		
1901 -	F65#				47044-BZ031-	1		
	+----------+							
	| 47547R | PLUG, BLEEDER(FOR DRUM BRAKE, REAR)							
	+----------+							
1111 - 1507	F65#		L/ABS		47547-BZ120-	1		
1507 - 1607	F650				47547-BZ120-	1		
1507 - 1901	F653				47547-BZ120-	1		
1901 -	F654		W/ABS		47547-BZ120-	1		
1901 -	F653				47547-BZ120-	1		
	+----------+							
	| 47548R | CAP, BLEEDER PLUG(FOR DRUM BRAKE, REAR)							
	+----------+							
1111 - 1507	F65#				47548-BZ080-	1		
1507 - 1607	F650				47548-BZ080-	1		
1507 - 1901	F653				47548-BZ080-	1		
1901 -	F653				47548-BZ080-	1		
1901 -	F654				47548-BZ080-	2		
	+----------+							
	| 47550 | CYLINDER ASSY, REAR WHEEL BRAKE(FOR RH, FRONT OR UPPER)							
	+----------+							
1111 - 1505	F65#		L/ABS		47550-BZ010-	1		
1506 - 1507	F65#		L/ABS		47550-BZ011-	1		
1507 - 1607	F650		L/ABS		47550-BZ011-	1		

FIG.47-06 REAR DRUM BRAKE WHEEL CYLINDER & BACKING PLATE

PROD_DATE	MODELS	SPEC CODE	DESCRIPTION	R/P	PART NUMBER	QYT	REV_REF FR	REV_REF TO
	+----------+							
	| 47550 | CYLINDER ASSY, REAR WHEEL BRAKE(FOR RH, FRONT OR UPPER)							
	CONTINUED--+							
1507 - 1901	F653		L/ABS		47550-BZ011-	1		
1901 -	F653		L/ABS		47550-BZ011-	1		
1901 -	F654		W/ABS		47560-BZ011-	1		
	+----------+							
	| 47550C | SPRING, COMPRESSION(FOR REAR WHEEL BRAKE CYLINDER)							
	+----------+							
1111 - 1507	F65#				47718-BZ010-	2		
1507 - 1607	F650				47718-BZ010-	2		
1507 - 1901	F653				47718-BZ010-	2		
1901 -	F65#				47718-BZ010-	2		
	+----------+							
	| 47570 | CYLINDER ASSY, REAR WHEEL BRAKE(FOR LH, FRONT OR UPPER)							
	+----------+							
1111 - 1505	F65#		L/ABS		47560-BZ010-	1		
1506 - 1507	F65#		L/ABS		47560-BZ011-	1		
1507 - 1607	F650		L/ABS		47560-BZ011-	1		
1507 - 1901	F653		L/ABS		47560-BZ011-	1		
1901 -	F654		W/ABS		47560-BZ011-	1		
1901 -	F653		L/ABS		47560-BZ011-	1		
	+----------+							
	| 47601 | LEVER SUB-ASSY, PARKING BRAKE SHOE, RH(FOR REAR BRAKE)							
	+----------+							
1111 - 1507	F65#				47611-BZ010-	1		
1507 - 1607	F650				47611-BZ010-	1		
1507 - 1901	F653				47611-BZ010-	1		
1901 -	F65#				47611-BZ010-	1		
	+----------+							
	| 47602 | LEVER SUB-ASSY, PARKING BRAKE SHOE, LH (FOR REAR BRAKE)							
	+----------+							
1111 - 1507	F65#				47612-BZ010-	1		
1507 - 1607	F650				47612-BZ010-	1		
1507 - 1901	F653				47612-BZ010-	1		

PROD_DATE	MODELS	SPEC CODE	DESCRIPTION	R/P	PART NUMBER	QYT	REV_REF FR	REV_REF TO
	+----------+							
	| 47602 | LEVER SUB-ASSY, PARKING BRAKE SHOE, LH (FOR REAR BRAKE)							
	CONTINUED--+							
1901 -	F65#				47612-BZ010-	1		
	+----------+							
	| 47623C | PIN, PARKING BRAKE LEVER							
	+----------+							
1111 - 1507	F65#				47623-BZ010-	2		
1507 - 1607	F650				47623-BZ010-	2		
1507 - 1901	F653				47623-BZ010-	2		
1901 -	F65#				47623-BZ010-	2		
	+----------+							
	| 47635C | RETAINER, ADJUSTING BOLT SPRING							
	+----------+							
1111 - 1507	F65#				47635-BZ030-	2		
1507 - 1607	F650				47635-BZ030-	2		
1507 - 1901	F653				47635-BZ030-	2		
1901 -	F65#				47635-BZ030-	2		
	+----------+							
	| 47643A | LEVER, REAR BRAKE AUTOMATIC ADJUST, RH							
	+----------+							
1111 - 1507	F65#				47643-BZ010-	1		
1507 - 1607	F650				47643-BZ010-	1		
1507 - 1901	F653				47643-BZ010-	1		
1901 -	F65#				47643-BZ010-	1		
	+----------+							
	| 47644A | LEVER, REAR BRAKE AUTOMATIC ADJUST, LH							
	+----------+							
1111 - 1507	F65#				47644-BZ010-	1		
1507 - 1607	F650				47644-BZ010-	1		
1507 - 1901	F653				47644-BZ010-	1		
1901 -	F65#				47644-BZ010-	1		

FIG.47-08 BRAKE TUBE & CLAMP

(1111-1507)

L/ABS

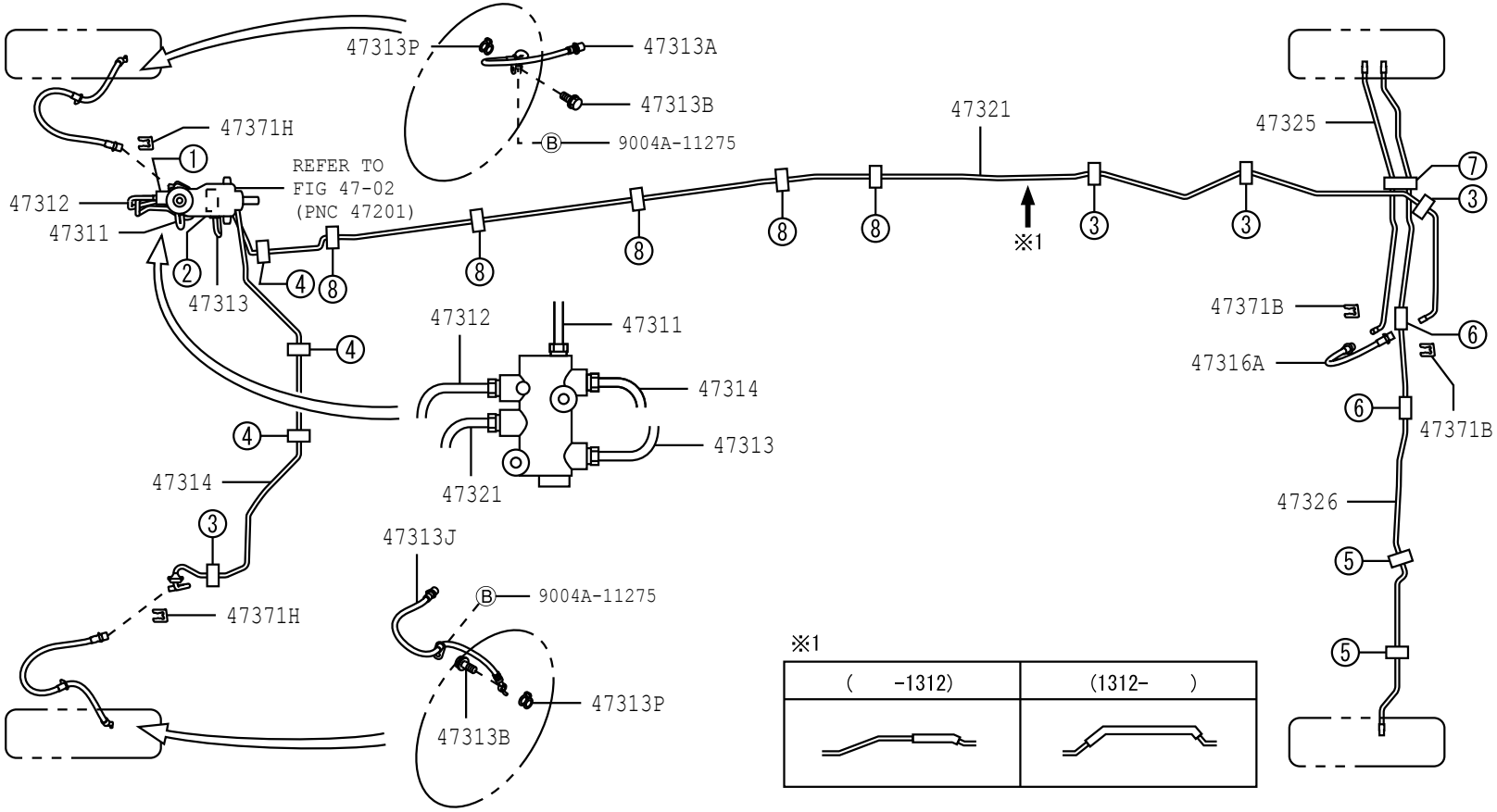

①	②	③	④	⑤	⑥	⑦	⑧
47190 91551-80640(2)	47371A	47372	47373B	47371E 91612-60612	47371F	91612-60612 47371G	REFER TO FIG 77-51 (PNC 77286F)

4708

477980-E

FIG.47-08 BRAKE TUBE & CLAMP

(1507-)F650,653

L/ABS

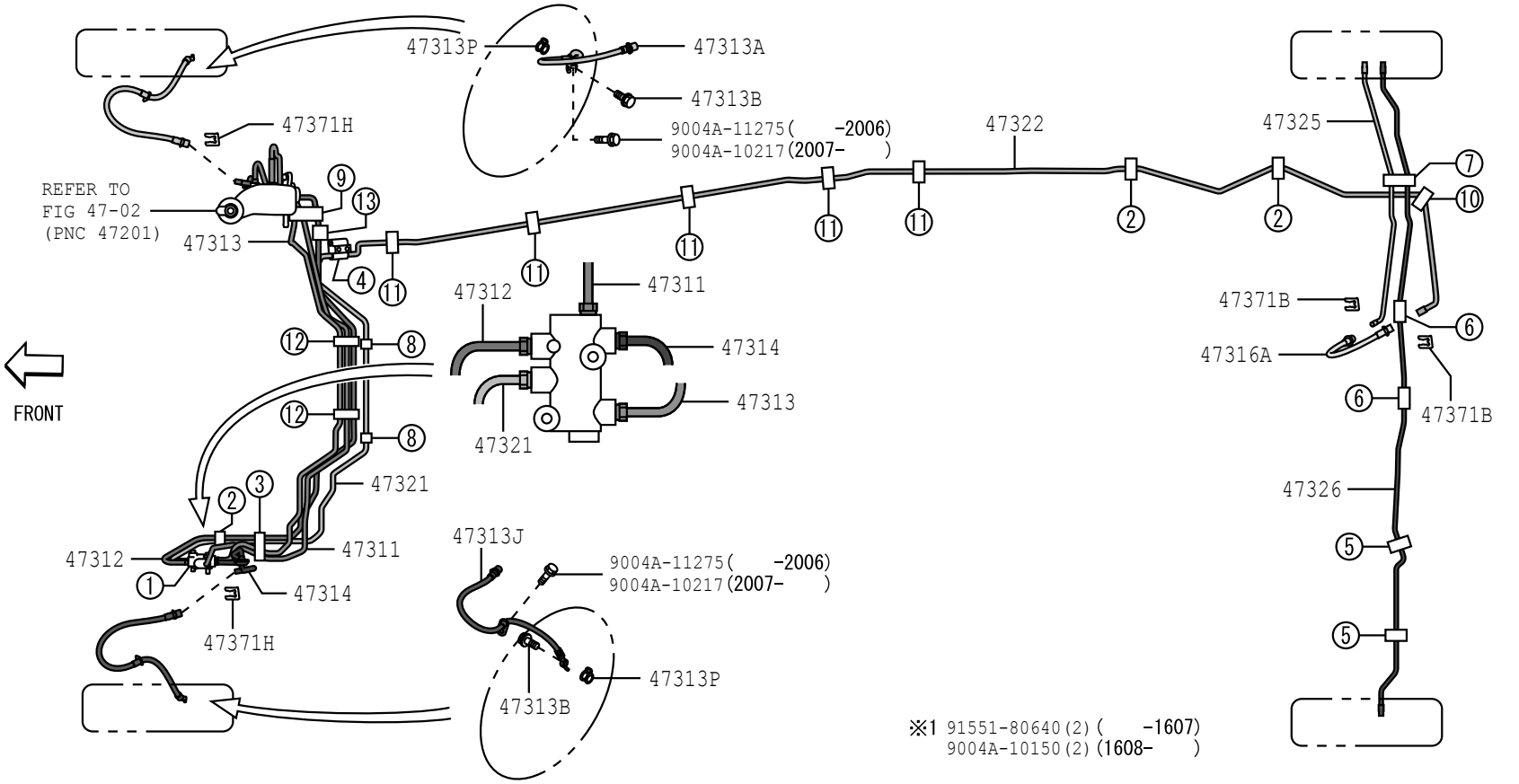

①	②	③	④	⑤	⑥	⑦	⑧	⑨	⑩	⑪	⑫	⑬
47190 ※1	47371D	47375	47391 9004A-11200	47371E 91612-60612	47371F	91612-60612 47371G	47371C	47371A	47372	REFER TO FIG 77-51 (PNC 77284)	REFER TO FIG 77-51 (PNC 77285D)	REFER TO FIG 77-51 (PNC 77286H)

4708

47B417-B

FIG.47-08 BRAKE TUBE & CLAMP

(1901-)F654

W/ABS

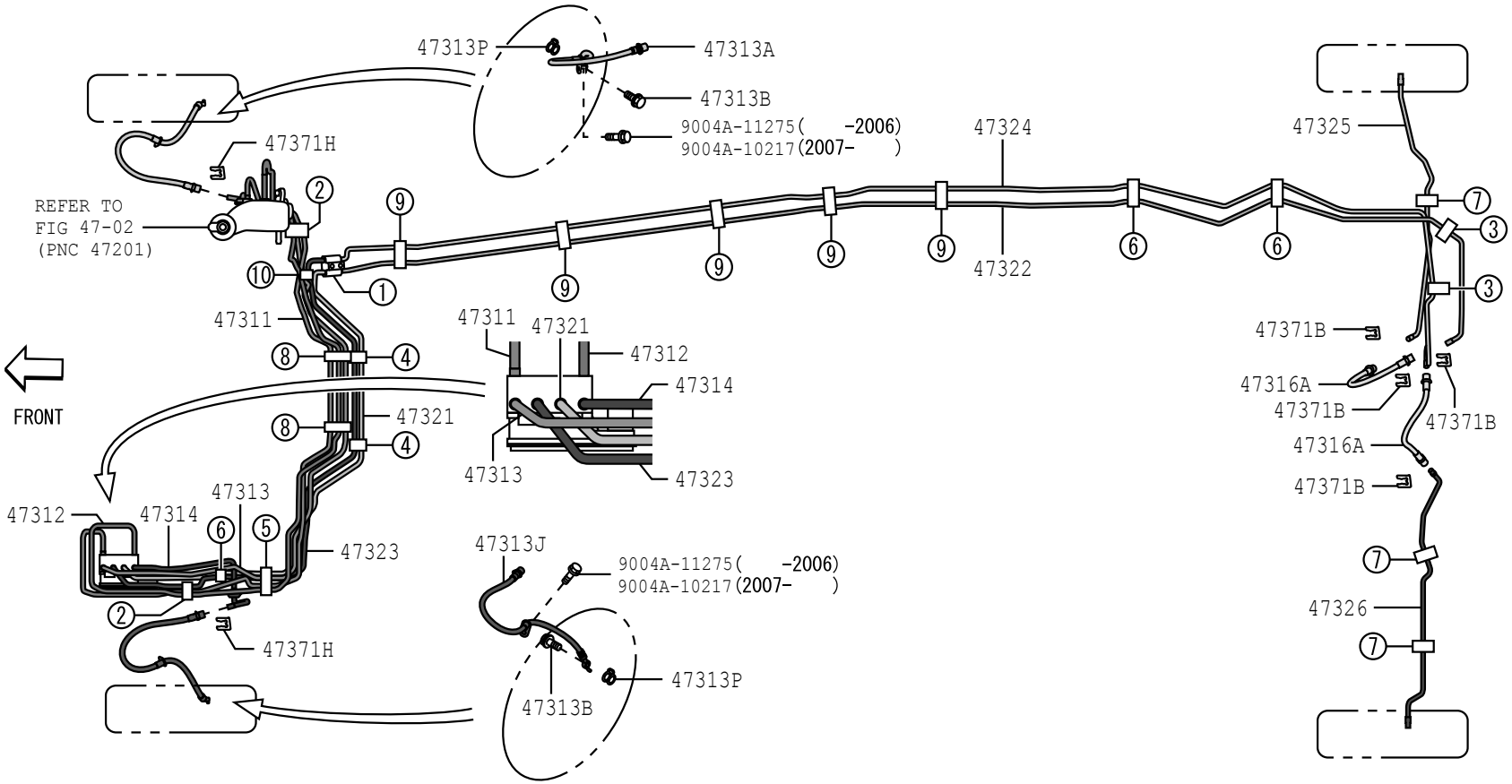

①	②	③	④	⑤	⑥	⑦	⑧	⑨	⑩
47391 9004A-11200	47371A	47372	47374B	47375	47371D	47371E 91612-60612	REFER TO FIG 77-51 (PNC 77285D)	REFER TO FIG 77-51 (PNC 77284)	REFER TO FIG 77-51 (PNC 77286H)

4708

47B418-B

(1901-)F654

ABS ACTUATOR

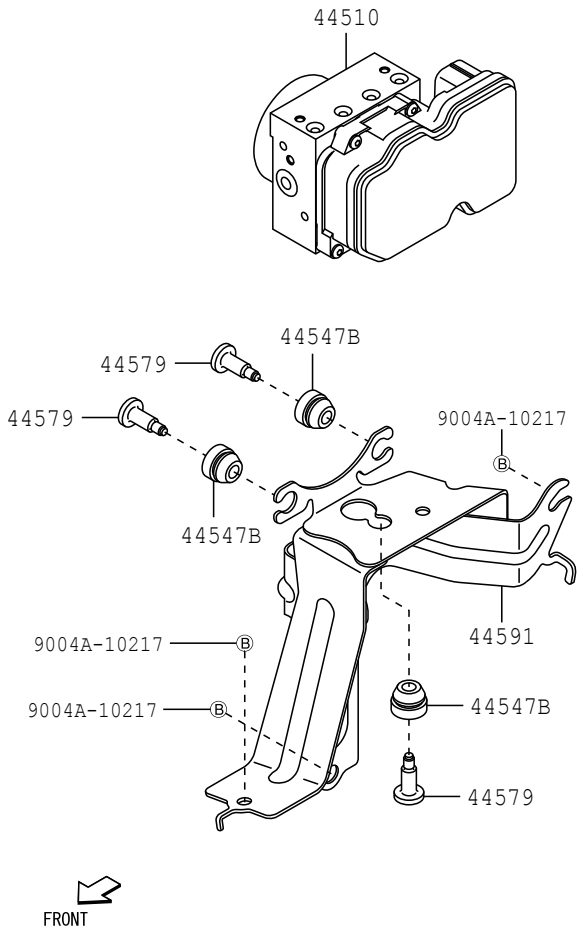

4708

47B419

FIG.47-08 BRAKE TUBE & CLAMP

PROD_DATE	MODELS	SPEC CODE	DESCRIPTION	R/P	PART NUMBER	QYT	REV_REF FR	REV_REF TO
	44510		ACTUATOR ASSY, BRAKE					
1901 -	F654				44050-BZ040-	1		
	44547B		CUSHION, BRAKE ACTUATOR BRACKET					
1901 -	F654				44547-BZ030-	3		
	44579		BOLT, BRAKE ACTUATOR BRACKET					
1901 -	F654				44548-BZ040-	3		
				#	(44548-B5020-)	1		
	44591		BRACKET, BRAKE ACTUATOR, NO.1					
1901 -	F654				44590-BZ120-	1		
	47190		VALVE ASSY, PROPORTIONING & BY-PASS					
1111 - 1507	F65#				47190-BZ020-	1		
1507 - 1607	F650				47190-BZ020-	1		
1507 - 1901	F653				47190-BZ020-	1		
1901 -	F653				47190-BZ020-	1		
	47311		TUBE, FRONT BRAKE, NO.1					
1111 - 1507	F65#				47311-BZ320-	1		
1507 - 1607	F650				47311-BZ440-	1		
1507 - 1901	F653				47311-BZ440-	1		
1901 -	F653				47311-BZ440-	1		
1901 -	F654				47311-BZ450-	1		
	47312		TUBE, FRONT BRAKE, NO.2					
1111 - 1507	F65#				47312-BZ080-	1		
1507 - 1607	F650				47312-BZ470-	1		
1507 - 1901	F653				47312-BZ470-	1		

PROD_DATE	MODELS	SPEC CODE	DESCRIPTION	R/P	PART NUMBER	QYT	REV_REF FR	REV_REF TO
	+----------+							
	| 47312 | TUBE, FRONT BRAKE, NO.2							
	CONTINUED--+							
1901 -	F653				47312-BZ470-	1		
1901 -	F654				47312-BZ480-	1		
	+----------+							
	| 47313 | TUBE, FRONT BRAKE, NO.3							
	+----------+							
1111 - 1507	F65#				47313-BZ290-	1		
1507 - 1607	F650				47313-BZ430-	1		
1507 - 1901	F653				47313-BZ430-	1		
1901 -	F653				47313-BZ430-	1		
1901 -	F654				47313-BZ440-	1		
	+----------+							
	| 47313A | HOSE, FLEXIBLE, NO.1(FOR FRONT)							
	+----------+							
1111 - 1507	F65#				9004A-94106-	1		
1507 - 1607	F650				47330-BZ020-	1		
1507 - 1901	F653				47330-BZ020-	1		
1901 -	F65#				47330-BZ020-	1		
	+----------+							
	| 47313B | BOLT, UNION(FOR FRONT FLEXIBLE HOSE)							
	+----------+							
1111 - 1211	F65#				90044-01079-	2		
1212 - 1507	F65#				90401-10058-	2		
1507 - 1607	F650				90401-10058-	2		
1507 - 1901	F653				90401-10058-	2		
1901 -	F65#				90401-10058-	2		
	+----------+							
	| 47313J | HOSE, FLEXIBLE, NO.2(FOR FRONT)							
	+----------+							
1111 - 1507	F65#				9004A-94102-	1		
1507 - 1607	F650				47330-BZ020-	1		
1507 - 1901	F653				47330-BZ020-	1		
1901 -	F65#				47330-BZ020-	1		

FIG.47-08 BRAKE TUBE & CLAMP

PROD_DATE	MODELS	SPEC CODE	DESCRIPTION	R/P	PART NUMBER	QYT	REV_REF FR	REV_REF TO
	+----------+							
	| 47313P | GASKET(FOR FRONT FLEXIBLE HOSE)							
	+----------+							
1111 - 1211	F65#				47389-97201-	2		
1212 - 1507	F65#				47389-50020-	2		
1507 - 1607	F650				47389-50020-	2		
1507 - 1901	F653				47389-50020-	2		
1901 -	F65#				47389-50020-	2		
	+----------+							
	| 47314 | TUBE, FRONT BRAKE, NO.4							
	+----------+							
1111 - 1507	F65#				47314-BZ080-	1		
1507 - 1607	F650				47314-BZ520-	1		
1507 - 1901	F653				47314-BZ520-	1		
1901 -	F654				47314-BZ500-	1		
1901 -	F653				47314-BZ520-	1		
	+----------+							
	| 47316A | HOSE, FLEXIBLE(FOR REAR BRAKE TUBE)							
	+----------+							
1111 - 1507	F65#				9004A-94040-	1		
1507 - 1607	F650				9004A-94118-	1		
1507 - 1901	F653				9004A-94118-	1		
1901 -	F653				9004A-94118-	1		
1901 -	F654				9004A-94118-	2		
	+----------+							
	| 47321 | TUBE, REAR BRAKE, NO.1							
	+----------+							
1111 - 1312	F65#				47321-BZ070-	1		
1312 - 1507	F65#				47321-BZ270-	1		
1507 - 1607	F650				47321-BZ250-	1		
1507 - 1901	F653				47321-BZ250-	1		
1901 -	F653				47321-BZ250-	1		
1901 -	F654				47321-BZ260-	1		

PROD_DATE	MODELS	SPEC CODE	DESCRIPTION	R/P	PART NUMBER	QYT	REV_REF FR	REV_REF TO
	+----------+							
	| 47322 | TUBE, REAR BRAKE, NO.2							
	+----------+							
1507 - 1607	F650				47322-BZ280-	1		
1507 - 1901	F653				47322-BZ280-	1		
1901 -	F65#				47322-BZ280-	1		
	+----------+							
	| 47323 | TUBE, REAR BRAKE, NO.3							
	+----------+							
1901 -	F654				47323-BZ190-	1		
	+----------+							
	| 47324 | TUBE, REAR BRAKE, NO.4							
	+----------+							
1901 -	F654				47324-BZ400-	1		
	+----------+							
	| 47325 | TUBE, REAR BRAKE, NO.5							
	+----------+							
1111 - 1507	F65#				47325-BZ130-	1		
1507 - 1607	F650				47325-BZ180-	1		
1507 - 1901	F653				47325-BZ180-	1		
1901 -	F653				47325-BZ180-	1		
1901 -	F654				47325-BZ190-	1		
	+----------+							
	| 47326 | TUBE, REAR BRAKE, NO.6							
	+----------+							
1111 - 1507	F65#				47326-BZ150-	1		
1507 - 1607	F650				47326-BZ210-	1		
1507 - 1901	F653				47326-BZ210-	1		
1901 -	F653				47326-BZ210-	1		
1901 -	F654				47326-BZ220-	1		
	+----------+							
	| 47371A | CLAMP, BRAKE TUBE, NO.1							
	+----------+							
1111 - 1507	F65#				9004A-46290-	1		
				#	(90044-64742-)	1		
1507 - 1607	F650				9004A-46290-	1		
				#	(90044-64742-)	1		

FIG.47-08 BRAKE TUBE & CLAMP

PROD_DATE	MODELS	SPEC CODE	DESCRIPTION	R/P	PART NUMBER	QYT	REV_REF FR	REV_REF TO
	+----------+							
	| 47371A | CLAMP, BRAKE TUBE, NO.1							
	CONTINUED--+							
1507 - 1901	F653				9004A-46290-	1		
				#	(90044-64742-)	1		
1901 -	F653				9004A-46290-	1		
				#	(90044-64742-)	1		
1901 -	F654				9004A-46290-	2		
				#	(90044-64742-)	1		
	+----------+							
	| 47371B | CLAMP, BRAKE TUBE, NO.6							
	+----------+							
1111 - 1507	F65#				90044-65441-	2		
1507 - 1607	F650				90044-65441-	2		
1507 - 1901	F653				90044-65441-	2		
1901 -	F653				90044-65441-	2		
1901 -	F654				90044-65441-	4		
	+----------+							
	| 47371C | CLAMP, BRAKE TUBE, NO.7							
	+----------+							
1507 - 1607	F650				90044-64710-	2		
1507 - 1901	F653				90044-64710-	2		
1901 -	F653				90044-64710-	2		
	+----------+							
	| 47371D | CLAMP, BRAKE TUBE, NO.8							
	+----------+							
1507 - 1508	F65#				90044-64713-	3		
1509 - 1607	F650				9004A-46321-	3		
				#	(90044-64713-)	1		
1509 - 1901	F653				9004A-46321-	3		
				#	(90044-64713-)	1		
1901 -	F65#				9004A-46321-	3		
				#	(90044-64713-)	1		
	+----------+							
	| 47371E | CLAMP, BRAKE TUBE, NO.9							
	+----------+							
1111 - 1507	F65#				96221-30705-	2		
1507 - 1607	F650				96221-30705-	2		

PROD_DATE	MODELS	SPEC CODE	DESCRIPTION	R/P	PART NUMBER	QYT	REV_REF FR	REV_REF TO
	+----------+							
	| 47371E | CLAMP, BRAKE TUBE, NO.9							
	CONTINUED--+							
1507 - 1901	F653				96221-30705-	2		
1901 -	F653				96221-30705-	2		
1901 -	F654				96221-30705-	3		
	+----------+							
	| 47371F | CLAMP, BRAKE TUBE, NO.10							
	+----------+							
1111 - 1507	F65#				9004A-44063-	2		
				#	(90044-46059-)	1		
1507 - 1607	F650				9004A-46296-	2		
				#	(90044-64299-)	1		
1507 - 1901	F653				9004A-46296-	2		
				#	(90044-64299-)	1		
1901 -	F653				9004A-46296-	2		
				#	(90044-64299-)	1		
	+----------+							
	| 47371G | CLAMP, BRAKE TUBE, NO.11							
	+----------+							
1111 - 1507	F65#				9004A-46094-	1		
1507 - 1607	F650				9004A-46094-	1		
1507 - 1901	F653				9004A-46094-	1		
1901 -	F653				9004A-46094-	1		
	+----------+							
	| 47371H | CLAMP, BRAKE TUBE, NO.12							
	+----------+							
1111 - 1507	F65#				90044-65441-	2		
1507 - 1607	F650				90044-65441-	2		
1507 - 1901	F653				90044-65441-	2		
1901 -	F65#				90044-65441-	2		
	+----------+							
	| 47372 | CLAMP, BRAKE TUBE, NO.2							
	+----------+							
1111 - 1507	F65#				9004A-46296-	4		
				#	(90044-64299-)	1		
1507 - 1607	F650				9004A-46296-	1		
				#	(90044-64299-)	1		

FIG.47-08 BRAKE TUBE & CLAMP

PROD_DATE	MODELS	SPEC CODE	DESCRIPTION	R/P	PART NUMBER	QYT	REV_REF FR	REV_REF TO
	+----------+							
	| 47372 | CLAMP, BRAKE TUBE, NO.2							
	CONTINUED--+							
1507 - 1901	F653				9004A-46296-	1		
				#	(90044-64299-)	1		
1901 -	F653				9004A-46296-	1		
				#	(90044-64299-)	1		
1901 -	F654				9004A-46296-	2		
				#	(90044-64299-)	1		
	+----------+							
	| 47373B | CLAMP, BRAKE TUBE, NO.3							
	+----------+							
1111 - 1507	F65#				9004A-46299-	3		
				#	(90044-64655-)	1		
	+----------+							
	| 47374B | CLAMP, BRAKE TUBE, NO.4							
	+----------+							
1901 -	F654				90044-64710-	2		
	+----------+							
	| 47375 | CLAMP, BRAKE TUBE, NO.5							
	+----------+							
1507 - 1607	F650				90044-64596-	1		
1507 - 1901	F653				90044-64596-	1		
1901 -	F65#				90044-64596-	1		
	+----------+							
	| 47391 | WAY, BRAKE TUBE							
	+----------+							
1507 - 1607	F650				44589-B2010-	1		
1507 - 1707	F653				44589-B2010-	1		
1708 - 1901	F653				44589-BZ020-	1		
1901 -	F65#				44589-BZ020-	1		

(1111-)

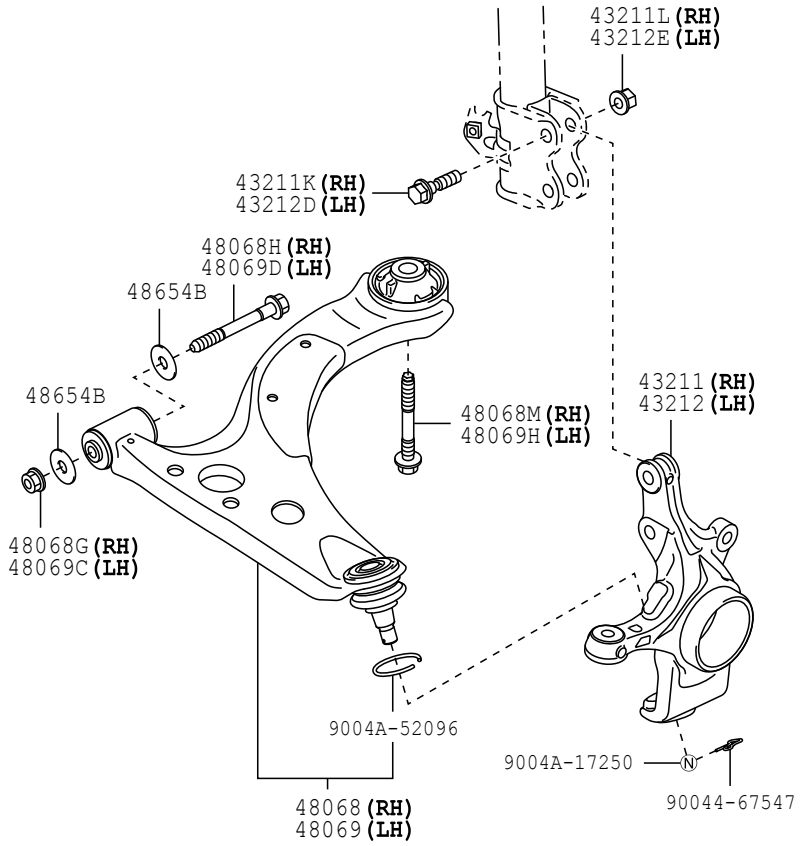

4802

483559-B

FIG.48-02 FRONT AXLE ARM & STEERING KNUCKLE

PROD_DATE	MODELS	SPEC CODE	DESCRIPTION	R/P	PART NUMBER	QYT	REV_REF FR	REV_REF TO
	+----------+							
	| 43211 | KNUCKLE, STEERING, RH							
	+----------+							
1111 - 1507	F65#				43211-BZ240-	1		
1507 - 1607	F650				43211-BZ240-	1		
1507 - 1901	F653				43211-BZ240-	1		
1901 -	F653				43211-BZ240-	1		
1901 -	F654				43211-BZ250-	1		
	+----------+							
	| 43211K | BOLT (FOR STEERING KNUCKLE RH)							
	+----------+							
1111 - 1507	F65#				90041-01710-	2		
1507 - 1511	F65#				90041-01710-	2		
1511 - 1607	F650				9004A-10148-	2		
				#	(90041-01710-)	1		
1511 - 1901	F653				9004A-10148-	2		
				#	(90041-01710-)	1		
1901 -	F65#				9004A-10148-	2		
				#	(90041-01710-)	1		
	+----------+							
	| 43211L | NUT (FOR STEERING KNUCKLE RH)							
	+----------+							
1111 - 1507	F65#				90041-70391-	2		
1507 - 1509	F65#				90041-70391-	2		
1510 - 1607	F650				9004A-17251-	2		
				#	(90041-70391-)	1		
1510 - 1901	F653				9004A-17251-	2		
				#	(90041-70391-)	1		
1901 -	F65#				9004A-17251-	2		
				#	(90041-70391-)	1		
	+----------+							
	| 43212 | KNUCKLE, STEERING, LH							
	+----------+							
1111 - 1507	F65#				43212-BZ240-	1		
1507 - 1607	F650		L/ABS		43212-BZ240-	1		
1507 - 1901	F653		L/ABS		43212-BZ240-	1		

PROD_DATE	MODELS	SPEC CODE	DESCRIPTION	R/P	PART NUMBER	QYT	REV_REF FR	REV_REF TO
	+----------+							
	| 43212 | KNUCKLE, STEERING, LH							
	CONTINUED--+							
1901 -	F653		L/ABS		43212-BZ240-	1		
1901 -	F654				43212-BZ250-	1		
	+----------+							
	| 43212D | BOLT (FOR STEERING KNUCKLE LH)							
	+----------+							
1111 - 1507	F65#				90041-01710-	2		
1507 - 1511	F65#				90041-01710-	2		
1511 - 1607	F650				9004A-10148-	2		
				#	(90041-01710-)	1		
1511 - 1901	F653				9004A-10148-	2		
				#	(90041-01710-)	1		
1901 -	F65#				9004A-10148-	2		
				#	(90041-01710-)	1		
	+----------+							
	| 43212E | NUT (FOR STEERING KNUCKLE LH)							
	+----------+							
1111 - 1507	F65#				90041-70391-	2		
1507 - 1509	F65#				90041-70391-	2		
1510 - 1607	F650				9004A-17251-	2		
				#	(90041-70391-)	1		
1510 - 1901	F653				9004A-17251-	2		
				#	(90041-70391-)	1		
1901 -	F65#				9004A-17251-	2		
				#	(90041-70391-)	1		
	+----------+							
	| 48068 | ARM SUB-ASSY, FRONT SUSPENSION, LOWER NO.1 RH							
	+----------+							
1111 - 1507	F65#				48068-BZ160-	1		
1507 - 1607	F650				48068-BZ190-	1		
1507 - 1901	F653				48068-BZ190-	1		
1901 -	F65#				48068-BZ190-	1		
	+----------+							
	| 48068G | NUT(FOR FRONT SUSPENSION LOWER ARM NO.1 R							
	+----------+ H)							
1111 - 1507	F65#				90041-70367-	1		

FIG.48-02 FRONT AXLE ARM & STEERING KNUCKLE

PROD_DATE	MODELS	SPEC CODE	DESCRIPTION	R/P	PART NUMBER	QYT	REV_REF FR	REV_REF TO
	+----------+							
	| 48068G | NUT(FOR FRONT SUSPENSION LOWER ARM NO.1 R							
	CONTINUED--+ H)							
1507 - 1509	F65#				90041-70367-	1		
1510 - 1607	F650				9004A-17255-	1		
				#	(90041-70367-)	1		
1510 - 1901	F653				9004A-17255-	1		
				#	(90041-70367-)	1		
1901 -	F65#				9004A-17255-	1		
				#	(90041-70367-)	1		
	+----------+							
	| 48068H | BOLT(FOR FRONT SUSPENSION LOWER ARM NO.1 RH)							
	+----------+							
1111 - 1507	F65#				90041-01659-	1		
1507 - 1512	F65#				90041-01659-	1		
1512 - 1607	F650				9004A-10161-	1		
1512 - 1901	F653				9004A-10161-	1		
1901 -	F65#				9004A-10161-	1		
	+----------+							
	| 48068M | BOLT(FOR FRONT SUSPENSION LOWER ARM NO.2 RH)							
	+----------+							
1111 - 1507	F65#				90041-05450-	1		
1507 - 1509	F65#				90041-05482-	1		
1510 - 1607	F650				90041-05450-	1		
1510 - 1706	F653				90041-05450-	1		
1707 - 1901	F653				9004A-11347-	1		
1901 -	F65#				9004A-11347-	1		
	+----------+							
	| 48069 | ARM SUB-ASSY, FRONT SUSPENSION, LOWER NO.1 LH							
	+----------+							
1111 - 1507	F65#				48069-BZ160-	1		
1507 - 1607	F650				48069-BZ190-	1		
1507 - 1901	F653				48069-BZ190-	1		
1901 -	F65#				48069-BZ190-	1		

FIG.48-02 FRONT AXLE ARM & STEERING KNUCKLE

PROD_DATE	MODELS	SPEC CODE	DESCRIPTION	R/P	PART NUMBER	QYT	REV_REF FR	REV_REF TO
	+----------+							
	| 48069C | NUT(FOR FRONT SUSPENSION LOWER ARM NO.1 L							
	+----------+ H)							
1111 - 1507	F65#				90041-70367-	1		
1507 - 1509	F65#				90041-70367-	1		
1510 - 1607	F650				9004A-17255-	1		
				#	(90041-70367-)	1		
1510 - 1901	F653				9004A-17255-	1		
				#	(90041-70367-)	1		
1901 -	F65#				9004A-17255-	1		
				#	(90041-70367-)	1		
	+----------+							
	| 48069D | BOLT(FOR FRONT SUSPENSION LOWER ARM NO.1 LH)							
	+----------+							
1111 - 1507	F65#				90041-01659-	1		
1507 - 1512	F65#				90041-01659-	1		
1512 - 1607	F650				9004A-10161-	1		
1512 - 1901	F653				9004A-10161-	1		
1901 -	F65#				9004A-10161-	1		
	+----------+							
	| 48069H | BOLT(FOR FRONT SUSPENSION LOWER ARM NO.2 LH)							
	+----------+							
1111 - 1507	F65#				90041-05450-	1		
1507 - 1509	F65#				90041-05482-	1		
1510 - 1607	F650				90041-05450-	1		
1510 - 1706	F653				90041-05450-	1		
1707 - 1901	F653				9004A-11347-	1		
1901 -	F65#				9004A-11347-	1		
	+----------+							
	| 48654B | WASHER, PLATE(FOR LOWER ARM BUSH)							
	+----------+							
1111 - 1507	F65#				9004A-20020-	4		
1507 - 1607	F650				9004A-20020-	4		
1507 - 1901	F653				9004A-20020-	4		
1901 -	F65#				9004A-20020-	4		

(1111-)F650

L/STABILIZER

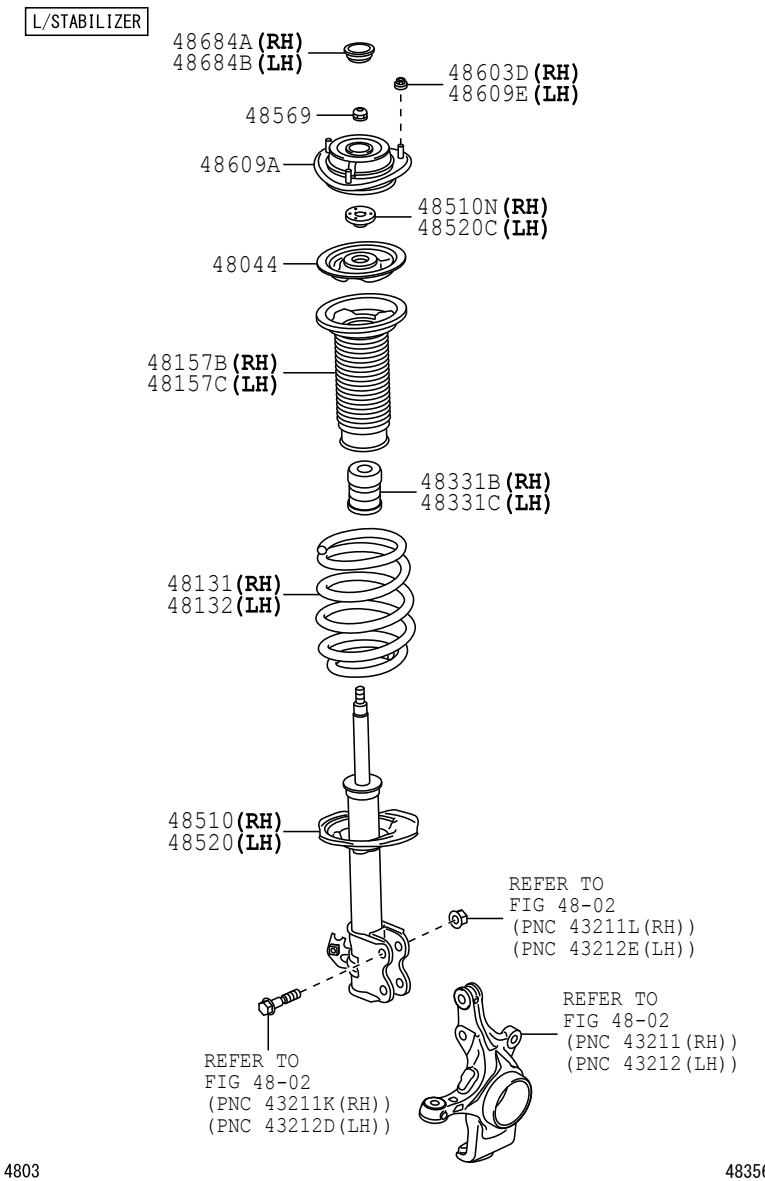

4803 483561-A

(1111-)F651,653,654

W/STABILIZER

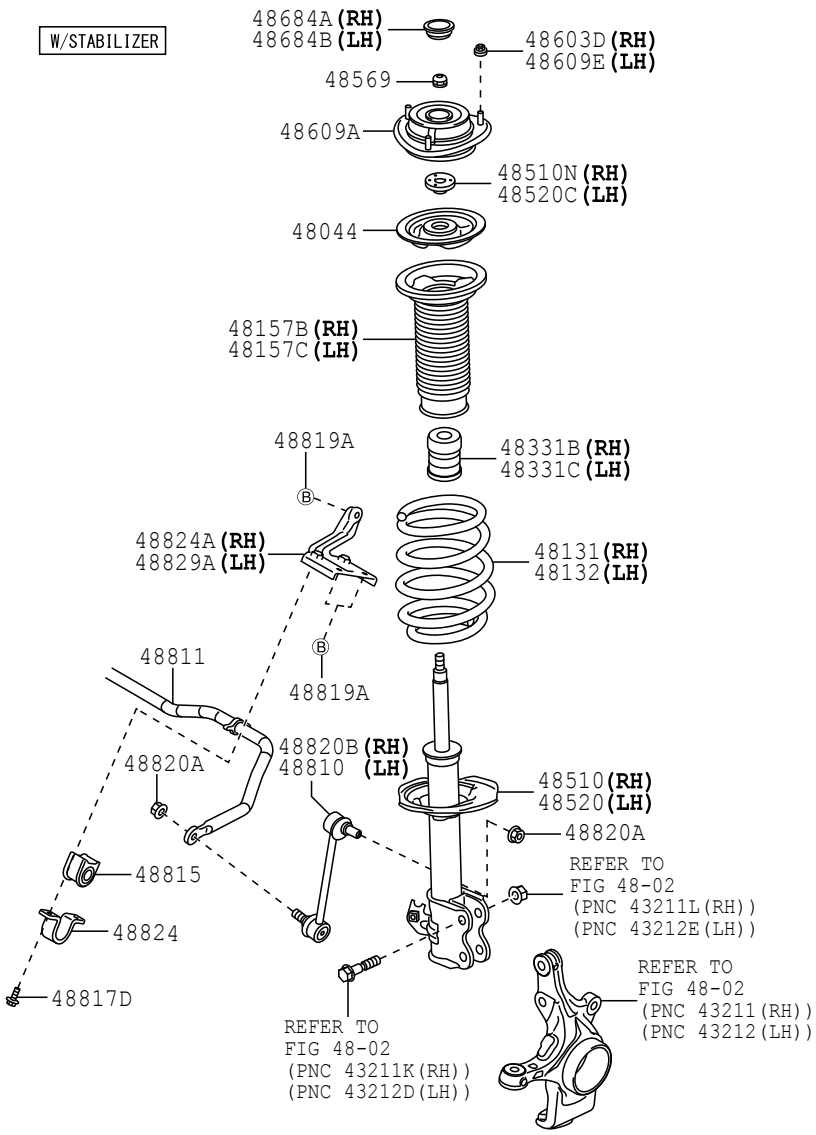

4803 483562-D

PROD_DATE	MODELS	SPEC CODE	DESCRIPTION	R/P	PART NUMBER	QYT	REV_REF FR	REV_REF TO
	+----------+							
	| 48044 | SEAT SUB-ASSY, FRONT SPRING, NO.1							
	+----------+							
1111 - 1507	F65#				48044-BZ080-	2		
1507 - 1607	F650				48044-BZ080-	2		
1507 - 1901	F653				48044-BZ080-	2		
1901 -	F65#				48044-BZ080-	2		
	+----------+							
	| 48131 | SPRING, FRONT COIL, RH							
	+----------+							
1111 - 1507	F650				48131-BZ450-	1		
1111 - 1507	F651				48131-BZ470-	1		
1507 - 1607	F650				48131-BZ700-	1		
1507 - 1901	F653				48131-BZ710-	1		
1901 -	F653				48131-BZB00-	1		
1901 -	F654				48131-BZB10-	1		
	+----------+							
	| 48132 | SPRING, FRONT COIL, LH							
	+----------+							
1111 - 1507	F650				48131-BZ450-	1		
1111 - 1507	F651				48131-BZ470-	1		
1507 - 1607	F650				48131-BZ700-	1		
1507 - 1901	F653				48131-BZ710-	1		
1901 -	F653				48131-BZB00-	1		
1901 -	F654				48131-BZB10-	1		
	+----------+							
	| 48157B | INSULATOR, FRONT COIL SPRING, UPPER RH							
	+----------+							
1111 - 1507	F65#				48157-BZ040-	1		
1507 - 1607	F650				48157-BZ040-	1		
1507 - 1901	F653				48157-BZ040-	1		
1901 - 2005	F65#				48157-BZ040-	1		
2006 -	F65#				48157-BZ100-	1		

FIG.48-03 FRONT SPRING & SHOCK ABSORBER

PROD_DATE	MODELS	SPEC CODE	DESCRIPTION	R/P	PART NUMBER	QYT	REV_REF FR	REV_REF TO
	+----------+							
	| 48157C | INSULATOR, FRONT COIL SPRING, UPPER LH							
	+----------+							
1111 - 1507	F65#				48157-BZ040-	1		
1507 - 1607	F650				48157-BZ040-	1		
1507 - 1901	F653				48157-BZ040-	1		
1901 - 2005	F65#				48157-BZ040-	1		
2006 -	F65#				48157-BZ100-	1		
	+----------+							
	| 48331B | BUMPER, FRONT SPRING, RH							
	+----------+							
1111 - 1507	F65#				48331-BZ110-	1		
1507 - 1607	F650				48331-BZ110-	1		
1507 - 1901	F653				48331-BZ110-	1		
1901 -	F65#				48331-BZ110-	1		
	+----------+							
	| 48331C | BUMPER, FRONT SPRING, LH							
	+----------+							
1111 - 1507	F65#				48331-BZ110-	1		
1507 - 1607	F650				48331-BZ110-	1		
1507 - 1901	F653				48331-BZ110-	1		
1901 -	F65#				48331-BZ110-	1		
	+----------+							
	| 48510 | ABSORBER ASSY, SHOCK, FRONT RH							
	+----------+							
1111 - 1507	F650		MARK 48510-BZ720		48510-BZ720-	1		
1111 - 1507	F651		MARK 48510-BZ740		48510-BZ740-	1		
1507 - 1607	F650		MARK 48510-BZA50		48510-BZA50-	1		
1507 - 1901	F653		MARK 48510-BZA60		48510-BZA60-	1		
1901 -	F653		MARK 48510-BZD60		48510-BZD60-	1		
1901 -	F654		MARK 48510-BZD70		48510-BZD70-	1		
	+----------+							
	| 48510N | BUSH(FOR FRONT SHOCK ABSORBER RH)							
	+----------+							
1111 - 1507	F65#				90043-85174-	1		

PROD_DATE	MODELS	SPEC CODE	DESCRIPTION	R/P	PART NUMBER	QYT	REV_REF FR	REV_REF TO
	+----------+							
	| 48510N | BUSH(FOR FRONT SHOCK ABSORBER RH)							
	CONTINUED--+							
1507 - 1607	F650				90043-85174-	1		
1507 - 1901	F653				90043-85174-	1		
1901 -	F65#				90043-85174-	1		
	+----------+							
	| 48520 | ABSORBER ASSY, SHOCK, FRONT LH							
	+----------+							
1111 - 1507	F650		MARK 48520-BZ720		48520-BZ720-	1		
1111 - 1507	F651		MARK 48520-BZ740		48520-BZ740-	1		
1507 - 1607	F650		MARK 48520-BZ390		48520-BZ390-	1		
1507 - 1901	F653		MARK 48520-BZ420		48520-BZ420-	1		
1901 -	F653		MARK 48520-BZA10		48520-BZA10-	1		
1901 -	F654		MARK 48520-BZA20		48520-BZA20-	1		
	+----------+							
	| 48520C | BUSH(FOR FRONT SHOCK ABSORBER LH)							
	+----------+							
1111 - 1507	F65#				90043-85174-	1		
1507 - 1607	F650				90043-85174-	1		
1507 - 1901	F653				90043-85174-	1		
1901 -	F65#				90043-85174-	1		
	+----------+							
	| 48569 | NUT, SHOCK ABSORBER PISTON							
	+----------+							
1111 - 1507	F65#				90041-79316-	2		
1507 - 1607	F650				90041-79316-	2		
1507 - 1901	F653				90041-79316-	2		
1901 -	F65#		COLOR:GREEN		90041-79316-	2		
	+----------+							
	| 48603D | NUT(FOR FRONT SUPPORT TO FRONT SHOCK ABSORBER RH)							
	+----------+							
1111 - 1507	F65#				90041-79303-	3		
1507 - 1509	F65#				90041-79303-	3		

FIG.48-03 FRONT SPRING & SHOCK ABSORBER

PROD_DATE	MODELS	SPEC CODE	DESCRIPTION	R/P	PART NUMBER	QYT	REV_REF FR	REV_REF TO
	+----------+							
	| 48603D | NUT(FOR FRONT SUPPORT TO FRONT SHOCK ABSORBER RH)							
	CONTINUED--+							
1510 - 1607	F650				9004A-17256-	3		
				#	(90041-79303-)	1		
1510 - 1901	F653				9004A-17256-	3		
				#	(90041-79303-)	1		
1901 -	F65#				9004A-17256-	3		
				#	(90041-79303-)	1		
	+----------+							
	| 48609A | SUPPORT SUB-ASSY, FRONT SUSPENSION							
	+----------+							
1111 - 1507	F65#				48609-BZ070-	2		
1507 - 1607	F650				48609-BZ070-	2		
1507 - 1901	F653				48609-BZ070-	2		
1901 -	F65#				48609-BZ070-	2		
	+----------+							
	| 48609E | NUT(FOR FRONT SUPPORT TO FRONT SHOCK ABSORBER LH)							
	+----------+							
1111 - 1507	F65#				90041-79303-	3		
1507 - 1509	F65#				90041-79303-	3		
1510 - 1607	F650				9004A-17256-	3		
				#	(90041-79303-)	1		
1510 - 1901	F653				9004A-17256-	3		
				#	(90041-79303-)	1		
1901 -	F65#				9004A-17256-	3		
				#	(90041-79303-)	1		
	+----------+							
	| 48684A | COVER, FRONT SUSPENSION SUPPORT DUST, RH							
	+----------+							
1111 - 1507	F65#				48684-BZ010-	1		
1507 - 1607	F650				48684-BZ010-	1		
1507 - 1901	F653				48684-BZ010-	1		
1901 -	F65#				48684-BZ010-	1		
	+----------+							
	| 48684B | COVER, FRONT SUSPENSION SUPPORT DUST, LH							
	+----------+							
1111 - 1507	F65#				48684-BZ010-	1		

PROD_DATE	MODELS	SPEC CODE	DESCRIPTION	R/P	PART NUMBER	QYT	REV_REF FR	REV_REF TO
	+----------+							
	| 48684B | COVER, FRONT SUSPENSION SUPPORT DUST, LH							
	CONTINUED--+							
1507 - 1607	F650				48684-BZ010-	1		
1507 - 1901	F653				48684-BZ010-	1		
1901 -	F65#				48684-BZ010-	1		
	+----------+							
	| 48810 | LINK ASSY, FRONT STABILIZER, LH							
	+----------+							
1111 - 1507	F651				48820-B0010-	1		
1507 - 1901	F653				48820-BZ080-	1		
1901 -	F65#				48820-BZ080-	1		
	+----------+							
	| 48811 | BAR, STABILIZER, FRONT							
	+----------+							
1111 - 1507	F651				48811-BZ030-	1		
1507 - 1901	F653				48811-BZ160-	1		
1901 -	F65#				48811-BZ160-	1		
	+----------+							
	| 48815 | BUSH, FRONT STABILIZER BAR, NO.1							
	+----------+							
1111 - 1507	F651				48815-BZ010-	2		
1507 - 1901	F653				48815-BZ150-	2		
1901 -	F65#				48815-BZ150-	2		
	+----------+							
	| 48817D | BOLT(FOR FRONT STABILIZER)							
	+----------+							
1111 - 1507	F651		M8,L=25		91671-80825-	4		
1507 - 1603	F653		M8,L=25		91671-80825-	4		
1604 - 1801	F653		M8,L=25		9004A-11318-	4		
				#	(91671-80825-)	1		
1801 - 1901	F653		M8,L=20		9004A-10226-	4		
1901 -	F65#		M8,L=20		9004A-10226-	4		
	+----------+							
	| 48819A | BOLT, FRONT STABILIZER							
	+----------+							
1111 - 1507	F651		M8,L=16		90041-20261-	6		

FIG.48-03 FRONT SPRING & SHOCK ABSORBER

PROD_DATE	MODELS	SPEC CODE	DESCRIPTION	R/P	PART NUMBER	QYT	REV_REF FR	REV_REF TO
	+----------+							
	| 48819A | BOLT, FRONT STABILIZER							
	CONTINUED--+							
1507 - 1511	F653		M8,L=16		90041-20261-	6		
1512 - 1801	F653		M8,L=16		9004A-11317-	6		
1801 - 1901	F653		M8,L=20		9004A-10226-	6		
1901 -	F65#		M8,L=20		9004A-10226-	6		
	+----------+							
	| 48820A | NUT(FOR FRONT STABILIZER LINK)							
	+----------+							
1111 - 1507	F651				90041-70260-	4		
1507 - 1509	F653				90041-70260-	4		
1510 - 1708	F653				9004A-17249-	4		
				#	(90041-70260-)	1		
1709 - 1901	F653				9004A-17255-	4		
				#	(90041-70367-)	1		
1901 -	F65#				9004A-17255-	4		
				#	(90041-70367-)	1		
	+----------+							
	| 48820B | LINK ASSY, FRONT STABILIZER, RH							
	+----------+							
1111 - 1507	F651				48820-B0010-	1		
1507 - 1901	F653				48820-BZ080-	1		
1901 -	F65#				48820-BZ080-	1		
	+----------+							
	| 48824 | BRACKET, STABILIZER, FRONT							
	+----------+							
1111 - 1507	F651				48824-BZ010-	2		
1507 - 1901	F653				48824-BZ010-	2		
1901 -	F65#				48824-BZ010-	2		
	+----------+							
	| 48824A | BRACKET, FRONT STABILIZER, NO.1 RH							
	+----------+							
1111 - 1507	F651				48809-BZ010-	1		
1507 - 1901	F653				48809-BZ010-	1		
1901 -	F65#				48809-BZ010-	1		

FIG.48-03 FRONT SPRING & SHOCK ABSORBER

PROD_DATE	MODELS	SPEC CODE	DESCRIPTION	R/P	PART NUMBER	QYT	REV_REF	
							FR	TO
	+----------+ | 48829A | BRACKET, FRONT STABILIZER, NO.1 LH +----------+							
1111 - 1507	F651				48807-BZ010-	1		
1507 - 1901	F653				48807-BZ010-	1		
1901 -	F65#				48807-BZ010-	1		

(1111-1507)

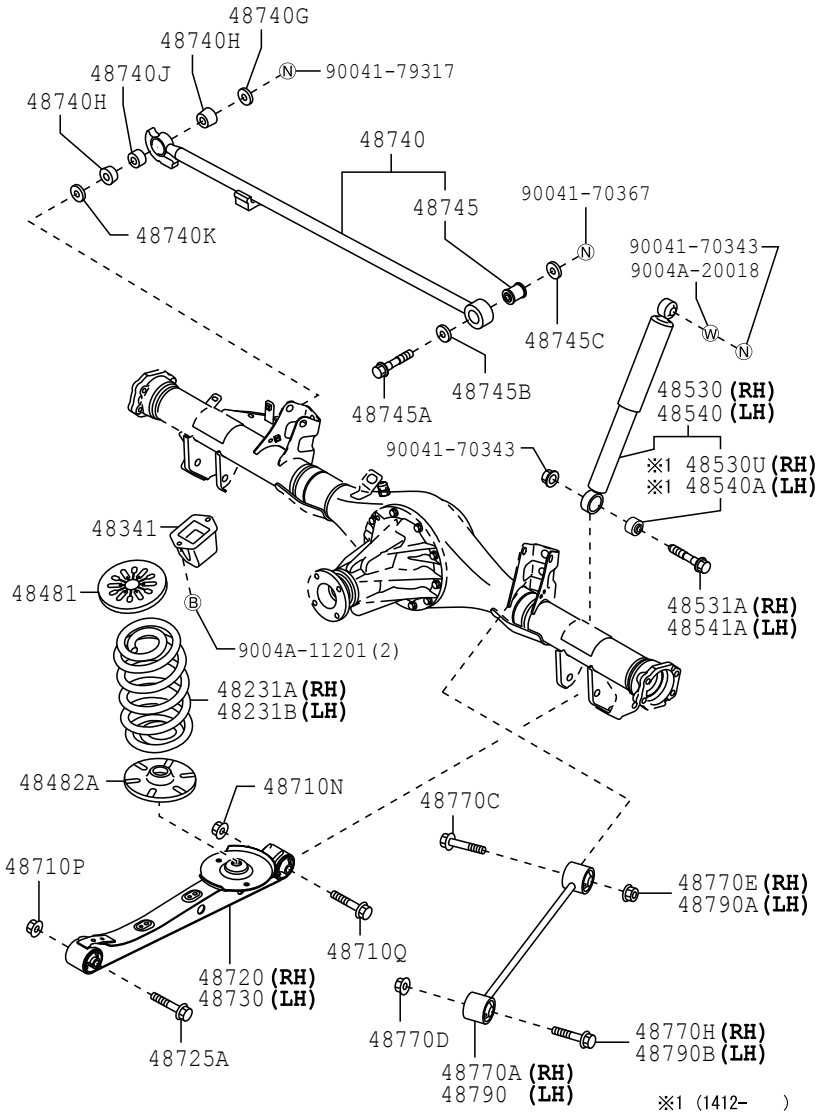

4804 483563-F

(1507-)

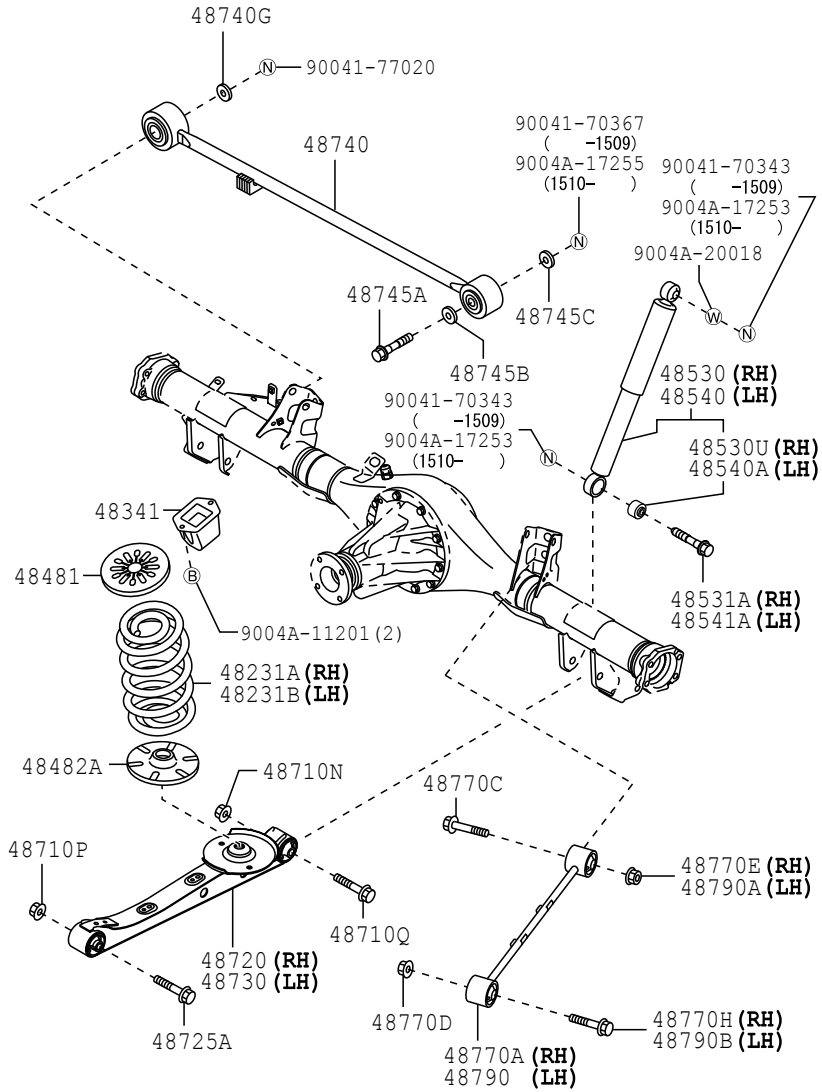

4804 484200-B

PROD_DATE	MODELS	SPEC CODE	DESCRIPTION	R/P	PART NUMBER	QYT	REV_REF FR	REV_REF TO
	+----------+							
	| 48231A | SPRING, COIL, REAR RH							
	+----------+							
1111 - 1209	F650				48231-BZ380-	1		
1111 - 1507	F651				48231-BZ400-	1		
1210 - 1507	F650				48231-BZ381-	1		
1507 - 1607	F650				48231-BZ440-	1		
1507 - 1901	F653				48231-BZ610-	1		
1901 -	F65#				48231-BZ830-	1		
	+----------+							
	| 48231B | SPRING, COIL, REAR LH							
	+----------+							
1111 - 1209	F650				48231-BZ380-	1		
1111 - 1507	F651				48231-BZ400-	1		
1210 - 1507	F650				48231-BZ381-	1		
1507 - 1607	F650				48231-BZ440-	1		
1507 - 1901	F653				48231-BZ610-	1		
1901 -	F65#				48231-BZ830-	1		
	+----------+							
	| 48341 | BUMPER, REAR SPRING							
	+----------+							
1111 - 1507	F65#				48341-BZ080-	2		
1507 - 1607	F650				48341-BZ130-	2		
1507 - 1901	F653				48341-BZ130-	2		
1901 -	F65#				48341-BZ130-	2		
	+----------+							
	| 48481 | SEAT, REAR SPRING, UPPER							
	+----------+							
1111 - 1507	F65#				48481-BZ010-	2		
1507 - 1607	F650				48481-BZ010-	2		
1507 - 1901	F653				48481-BZ010-	2		
1901 -	F65#				48481-BZ010-	2		

FIG.48-04 REAR SPRING & SHOCK ABSORBER

PROD_DATE	MODELS	SPEC CODE	DESCRIPTION	R/P	PART NUMBER	QYT	REV_REF FR	REV_REF TO
	+----------+							
	| 48482A | SEAT, REAR SPRING, LOWER							
	+----------+							
1111 - 1507	F65#				48482-BZ010-	2		
1507 - 1607	F650				48482-BZ010-	2		
1507 - 1901	F653				48482-BZ010-	2		
1901 -	F65#				48482-BZ010-	2		
	+----------+							
	| 48530 | ABSORBER ASSY, SHOCK, REAR RH							
	+----------+							
1111 - 1310	F650		MARK 48531-BZ470		48531-BZ470-	1		
1111 - 1310	F651		MARK 48531-BZ490		48531-BZ490-	1		
1311 - 1411	F650		MARK 48531-BZ471		48531-BZ471-	1		
1311 - 1411	F651		MARK 48531-BZ491		48531-BZ491-	1		
1412 - 1501	F650		MARK 48531-BZ472		48531-BZ472-	1		
1412 - 1501	F651		MARK 48531-BZ492		48531-BZ492-	1		
1502 - 1507	F650		MARK 48531-BZ473		48531-BZ473-	1		
1502 - 1507	F651		MARK 48531-BZ493		48531-BZ493-	1		
1507 - 1607	F650		MARK 48530-BZ080		48530-BZ080-	1		
1507 - 1901	F653		MARK 48530-BZ090		48530-BZ090-	1		
1901 -	F65#		MARK 48530-BZ240		48530-BZ240-	1		
	+----------+							
	| 48530U | BUSH(FOR REAR SHOCK ABSORBER RH)							
	+----------+							
1412 - 1507	F65#				48537-BZ040-	1		
1507 - 1607	F650				48537-BZ040-	1		
1507 - 1901	F653				48537-BZ040-	1		
1901 -	F65#				48537-BZ040-	1		
	+----------+							
	| 48531A | BOLT, UNION(FOR REAR SHOCK ABSORBER RH)							
	+----------+							
1111 - 1507	F65#				90041-05375-	1		
1507 - 1607	F650				90041-05375-	1		

PROD_DATE	MODELS	SPEC CODE	DESCRIPTION	R/P	PART NUMBER	QYT	REV_REF FR	REV_REF TO
	+----------+							
	| 48531A | BOLT, UNION(FOR REAR SHOCK ABSORBER RH)							
	CONTINUED--+							
1507 - 1901	F653				90041-05375-	1		
1901 - 2009	F65#		#		90041-05375-	1		
	+----------+							
	| 48540 | ABSORBER ASSY, SHOCK, REAR LH							
	+----------+							
1111 - 1310	F650		MARK 48531-BZ470		48531-BZ470-	1		
1111 - 1310	F651		MARK 48531-BZ490		48531-BZ490-	1		
1311 - 1411	F650		MARK 48531-BZ471		48531-BZ471-	1		
1311 - 1411	F651		MARK 48531-BZ491		48531-BZ491-	1		
1412 - 1501	F650		MARK 48531-BZ472		48531-BZ472-	1		
1412 - 1501	F651		MARK 48531-BZ492		48531-BZ492-	1		
1502 - 1507	F650		MARK 48531-BZ473		48531-BZ473-	1		
1502 - 1507	F651		MARK 48531-BZ493		48531-BZ493-	1		
1507 - 1607	F650		MARK 48530-BZ080		48530-BZ080-	1		
1507 - 1901	F653		MARK 48530-BZ090		48530-BZ090-	1		
1901 -	F65#		MARK 48530-BZ240		48530-BZ240-	1		
	+----------+							
	| 48540A | BUSH(FOR REAR SHOCK ABSORBER LH)							
	+----------+							
1412 - 1507	F65#				48537-BZ040-	1		
1507 - 1607	F650				48537-BZ040-	1		
1507 - 1901	F653				48537-BZ040-	1		
1901 -	F65#				48537-BZ040-	1		
	+----------+							
	| 48541A | BOLT, UNION(FOR REAR SHOCK ABSORBER LH)							
	+----------+							
1111 - 1507	F65#				90041-05375-	1		
1507 - 1607	F650				90041-05375-	1		
1507 - 1901	F653				90041-05375-	1		
1901 - 2009	F65#		#		90041-05375-	1		

FIG.48-04 REAR SPRING & SHOCK ABSORBER

PROD_DATE	MODELS	SPEC CODE	DESCRIPTION	R/P	PART NUMBER	QYT	REV_REF FR	REV_REF TO
	+----------+							
	| 48710N | NUT, NO.1(FOR REAR LOWER CONTROL ARM)							
	+----------+							
1111 - 1507	F65#				90041-70366-	2		
1507 - 1509	F65#				90041-70366-	2		
1510 - 1607	F650				9004A-17254-	2		
				#	(90041-70366-)	1		
1510 - 1901	F653				9004A-17254-	2		
				#	(90041-70366-)	1		
1901 -	F65#				9004A-17254-	2		
				#	(90041-70366-)	1		
	+----------+							
	| 48710P | NUT, NO.2(FOR REAR LOWER CONTROL ARM)							
	+----------+							
1111 - 1507	F65#				90041-79318-	2		
1507 - 1509	F65#				90041-79318-	2		
1510 - 1607	F650				9004A-17257-	2		
				#	(90041-79318-)	1		
1510 - 1901	F653				9004A-17257-	2		
				#	(90041-79318-)	1		
1901 -	F65#				9004A-17257-	2		
				#	(90041-79318-)	1		
	+----------+							
	| 48710Q | BOLT(FOR REAR LOWER CONTROL ARM)							
	+----------+							
1111 - 1507	F65#				90041-01664-	2		
1507 - 1511	F65#				90041-01664-	2		
1511 - 1607	F650				9004A-10159-	2		
				#	(90041-01664-)	1		
1511 - 1901	F653				9004A-10159-	2		
				#	(90041-01664-)	1		
1901 -	F65#				9004A-10159-	2		
				#	(90041-01664-)	1		
	+----------+							
	| 48720 | ARM ASSY, LOWER CONTROL, RH							
	+----------+							
1111 - 1507	F65#				48720-BZ060-	1		
1507 - 1607	F650				48720-BZ070-	1		

PROD_DATE	MODELS	SPEC CODE	DESCRIPTION	R/P	PART NUMBER	QYT	REV_REF FR	REV_REF TO
	+----------+							
	| 48720 | ARM ASSY, LOWER CONTROL, RH							
	CONTINUED--+							
1507 - 1901	F653				48720-BZ070-	1		
1901 -	F65#				48720-BZ070-	1		
	+----------+							
	| 48725A | BOLT(FOR LOWER CONTROL ARM)							
	+----------+							
1111 - 1507	F65#				90041-05378-	2		
1507 - 1511	F65#				90041-05378-	2		
1511 - 1607	F650				9004A-10149-	2		
				#	(90041-05378-)	1		
1511 - 1901	F653				9004A-10149-	2		
				#	(90041-05378-)	1		
1901 -	F65#				9004A-10149-	2		
				#	(90041-05378-)	1		
	+----------+							
	| 48730 | ARM ASSY, LOWER CONTROL, LH							
	+----------+							
1111 - 1507	F65#				48720-BZ060-	1		
1507 - 1607	F650				48720-BZ070-	1		
1507 - 1901	F653				48720-BZ070-	1		
1901 -	F65#				48720-BZ070-	1		
	+----------+							
	| 48740 | ROD ASSY, REAR LATERAL CONTROL							
	+----------+							
1111 - 1311	F650..STD				48740-BZ120-	1		
1111 - 1311	F651..E4AT				48740-BZ120-	1		
1111 - 1311	F650..LO				48740-BZ140-	1		
1111 - 1311	F651..5F				48740-BZ140-	1		
1312 - 1507	F650..STD				48740-BZ121-	1		
1312 - 1507	F651..E4AT				48740-BZ121-	1		
1312 - 1507	F650..LO				48740-BZ141-	1		
1312 - 1507	F651..5F				48740-BZ141-	1		
1507 - 1607	F650				48740-BZ130-	1		

FIG.48-04 REAR SPRING & SHOCK ABSORBER

PROD_DATE	MODELS	SPEC CODE	DESCRIPTION	R/P	PART NUMBER	QYT	REV_REF FR	REV_REF TO
	+----------+							
	| 48740 | ROD ASSY, REAR LATERAL CONTROL							
	CONTINUED--+							
1507 - 1901	F653				48740-BZ130-	1		
1901 -	F65#				48740-BZ130-	1		
	+----------+							
	| 48740G | WASHER, PLATE, NO.1(FOR REAR LATERAL CONTROL ROD)							
	+----------+							
1111 - 1507	F65#				9004A-20017-	1		
1507 - 1607	F650				9004A-20017-	1		
1507 - 1901	F653				9004A-20017-	1		
1901 -	F65#				9004A-20017-	1		
	+----------+							
	| 48740H | BUSH, NO.1(FOR REAR LATERAL CONTROL ROD)							
	+----------+							
1111 - 1402	F65#				48706-BZ050-	2		
1402 - 1507	F65#				48706-BZ060-	2		
	+----------+							
	| 48740J | BUSH, NO.2(FOR REAR LATERAL CONTROL ROD)							
	+----------+							
1111 - 1402	F65#				90043-86103-	1		
	+----------+							
	| 48740K | WASHER, PLATE, NO.2(FOR REAR LATERAL CONTROL ROD)							
	+----------+							
1111 - 1507	F65#				9004A-20029-	1		
	+----------+							
	| 48745 | BUSH, LATERAL CONTROL ROD							
	+----------+							
1111 - 1311	F65#				48706-BZ040-	1		
1312 - 1507	F65#				48706-BZ041-	1		
	+----------+							
	| 48745A | BOLT, HEXAGON(FOR LATERAL CONTROL ROD)							
	+----------+							
1111 - 1507	F65#				90041-05407-	1		
1507 - 1511	F65#				90041-05407-	1		
1511 - 1607	F650				9004A-10160-	1		
				#	(90041-05407-)	1		
1511 - 1901	F653				9004A-10160-	1		
				#	(90041-05407-)	1		

PROD_DATE	MODELS	SPEC CODE	DESCRIPTION	R/P	PART NUMBER	QYT	REV_REF FR	REV_REF TO
	+----------+							
	| 48745A | BOLT, HEXAGON(FOR LATERAL CONTROL ROD)							
	CONTINUED--+							
1901 -	F65#				9004A-10160-	1		
				#	(90041-05407-)	1		
	+----------+							
	| 48745B | WASHER, LATERAL CONTROL ROD CUSHION							
	+----------+							
1111 - 1507	F65#				9004A-20039-	1		
1507 - 1607	F650				9004A-20039-	1		
1507 - 1901	F653				9004A-20039-	1		
1901 -	F65#				9004A-20039-	1		
	+----------+							
	| 48745C | WASHER, LATERAL CONTROL ROD CUSHION							
	+----------+							
1111 - 1507	F65#				9004A-20039-	1		
1507 - 1607	F650				9004A-20039-	1		
1507 - 1901	F653				9004A-20039-	1		
1901 -	F65#				9004A-20039-	1		
	+----------+							
	| 48770A | ARM ASSY, UPPER CONTROL, REAR RH							
	+----------+							
1111 - 1507	F65#		L/ABS		48710-BZ180-	1		
1507 - 1607	F650		L/ABS		48710-BZ320-	1		
1507 - 1901	F653		L/ABS		48710-BZ320-	1		
1901 -	F653		L/ABS		48710-BZ320-	1		
1901 -	F654		W/ABS		48710-BZ330-	1		
	+----------+							
	| 48770C | BOLT(FOR REAR UPPER CONTROL ARM)							
	+----------+							
1111 - 1507	F65#				90041-01662-	2		
1507 - 1511	F65#				90041-01662-	2		
1511 - 1607	F650				9004A-10157-	2		
				#	(90041-01662-)	1		
1511 - 1901	F653				9004A-10157-	2		
				#	(90041-01662-)	1		

FIG.48-04 REAR SPRING & SHOCK ABSORBER

PROD_DATE	MODELS	SPEC CODE	DESCRIPTION	R/P	PART NUMBER	QYT	REV_REF FR	REV_REF TO
	+----------+							
	| 48770C | BOLT(FOR REAR UPPER CONTROL ARM)							
	CONTINUED--+							
1901 -	F65#				9004A-10157-	2		
				#	(90041-01662-)	1		
	+----------+							
	| 48770D | NUT(FOR REAR UPPER CONTROL ARM)							
	+----------+							
1111 - 1507	F65#				90041-79318-	2		
1507 - 1509	F65#				90041-79318-	2		
1510 - 1607	F650				9004A-17257-	2		
				#	(90041-79318-)	1		
1510 - 1901	F653				9004A-17257-	2		
				#	(90041-79318-)	1		
1901 -	F65#				9004A-17257-	2		
				#	(90041-79318-)	1		
	+----------+							
	| 48770E | NUT, NO.1(FOR REAR UPPER CONTROL ARM RH)							
	+----------+							
1111 - 1507	F65#				90041-70366-	1		
1507 - 1509	F65#				90041-70366-	1		
1510 - 1607	F650				9004A-17254-	1		
				#	(90041-70366-)	1		
1510 - 1901	F653				9004A-17254-	1		
				#	(90041-70366-)	1		
1901 -	F65#				9004A-17254-	1		
				#	(90041-70366-)	1		
	+----------+							
	| 48770H | BOLT(FOR REAR UPPER CONTROL ARM RH)							
	+----------+							
1111 - 1507	F65#				90041-01661-	1		
1507 - 1511	F65#				90041-01661-	1		
1511 - 1607	F650				9004A-10152-	1		
				#	(90041-01661-)	1		
1511 - 1901	F653				9004A-10152-	1		
				#	(90041-01661-)	1		
1901 -	F65#				9004A-10152-	1		
				#	(90041-01661-)	1		

PROD_DATE	MODELS	SPEC CODE	DESCRIPTION	R/P	PART NUMBER	QYT	REV_REF FR	REV_REF TO
	+----------+							
	| 48790 | ARM ASSY, UPPER CONTROL, REAR LH							
	+----------+							
1111 - 1507	F65#		L/ABS		48710-BZ180-	1		
1507 - 1607	F650		L/ABS		48710-BZ320-	1		
1507 - 1901	F653		L/ABS		48710-BZ320-	1		
1901 -	F653		L/ABS		48710-BZ320-	1		
1901 -	F654		W/ABS		48710-BZ330-	1		
	+----------+							
	| 48790A | NUT, NO.1(FOR REAR UPPER CONTROL ARM LH)							
	+----------+							
1111 - 1507	F65#				90041-70366-	1		
1507 - 1509	F65#				90041-70366-	1		
1510 - 1607	F650				9004A-17254-	1		
				#	(90041-70366-)	1		
1510 - 1901	F653				9004A-17254-	1		
				#	(90041-70366-)	1		
1901 -	F65#				9004A-17254-	1		
				#	(90041-70366-)	1		
	+----------+							
	| 48790B | BOLT(FOR REAR UPPER CONTROL ARM LH)							
	+----------+							
1111 - 1507	F65#				90041-01661-	1		
1507 - 1511	F65#				90041-01661-	1		
1511 - 1607	F650				9004A-10152-	1		
				#	(90041-01661-)	1		
1511 - 1901	F653				9004A-10152-	1		
				#	(90041-01661-)	1		
1901 -	F65#				9004A-10152-	1		
				#	(90041-01661-)	1		

FIG.51-52 SUSPENSION CROSSMEMBER & UNDER COVER

(1111-1401)

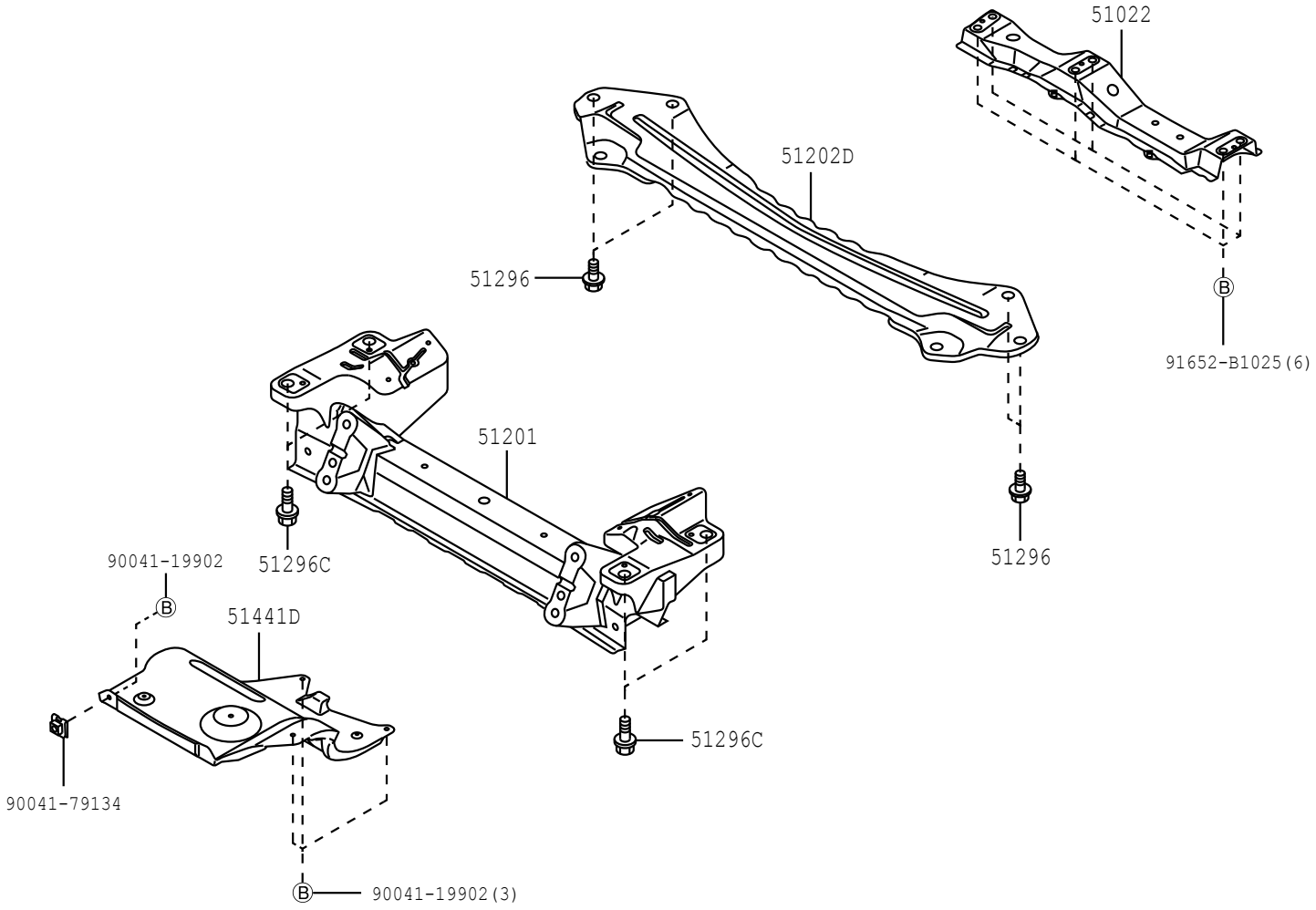

5152

512363-C

FIG.51-52 SUSPENSION CROSSMEMBER & UNDER COVER

(1401-1507)

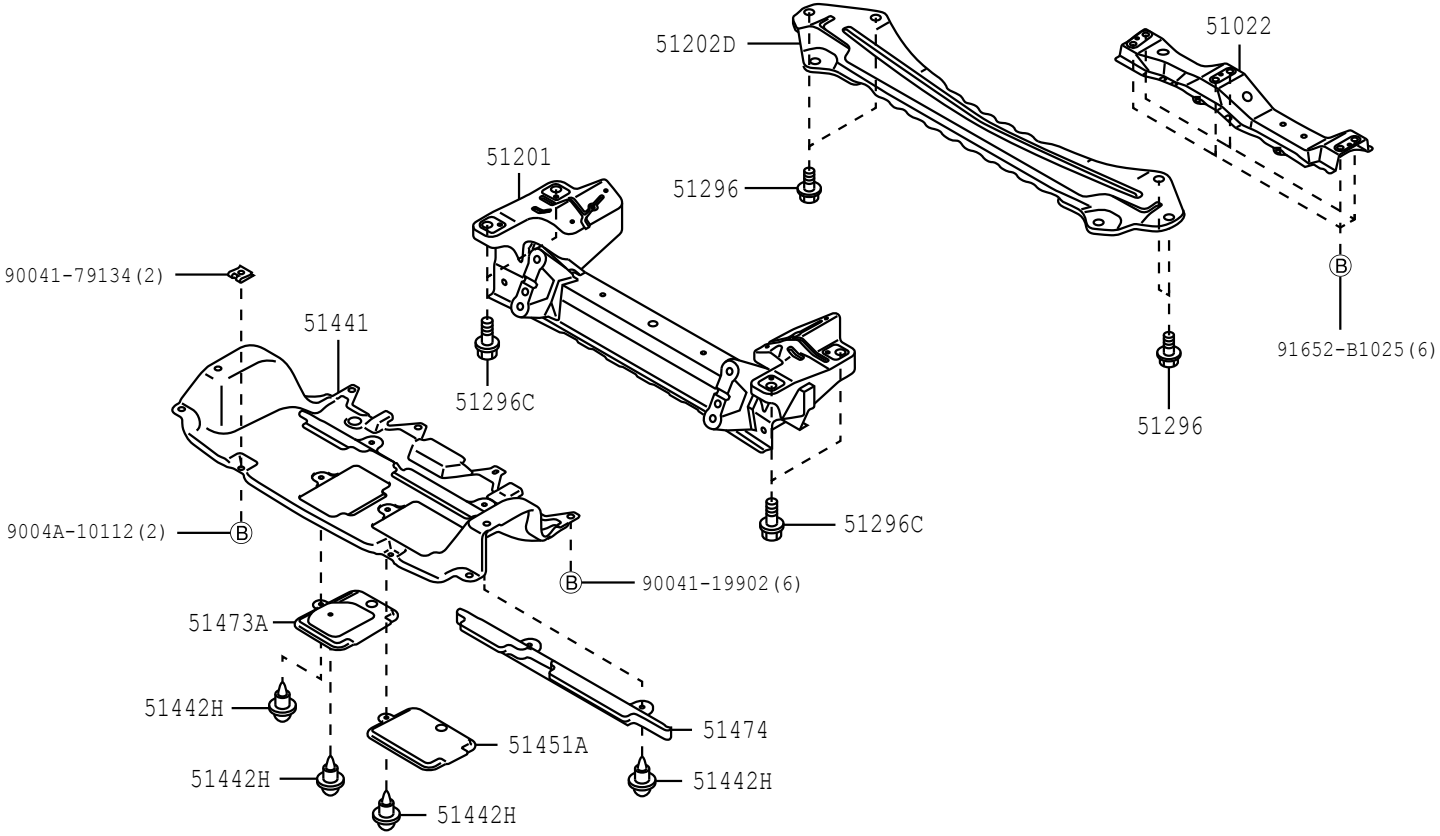

FIG.51-52 SUSPENSION CROSSMEMBER & UNDER COVER

(1507-)

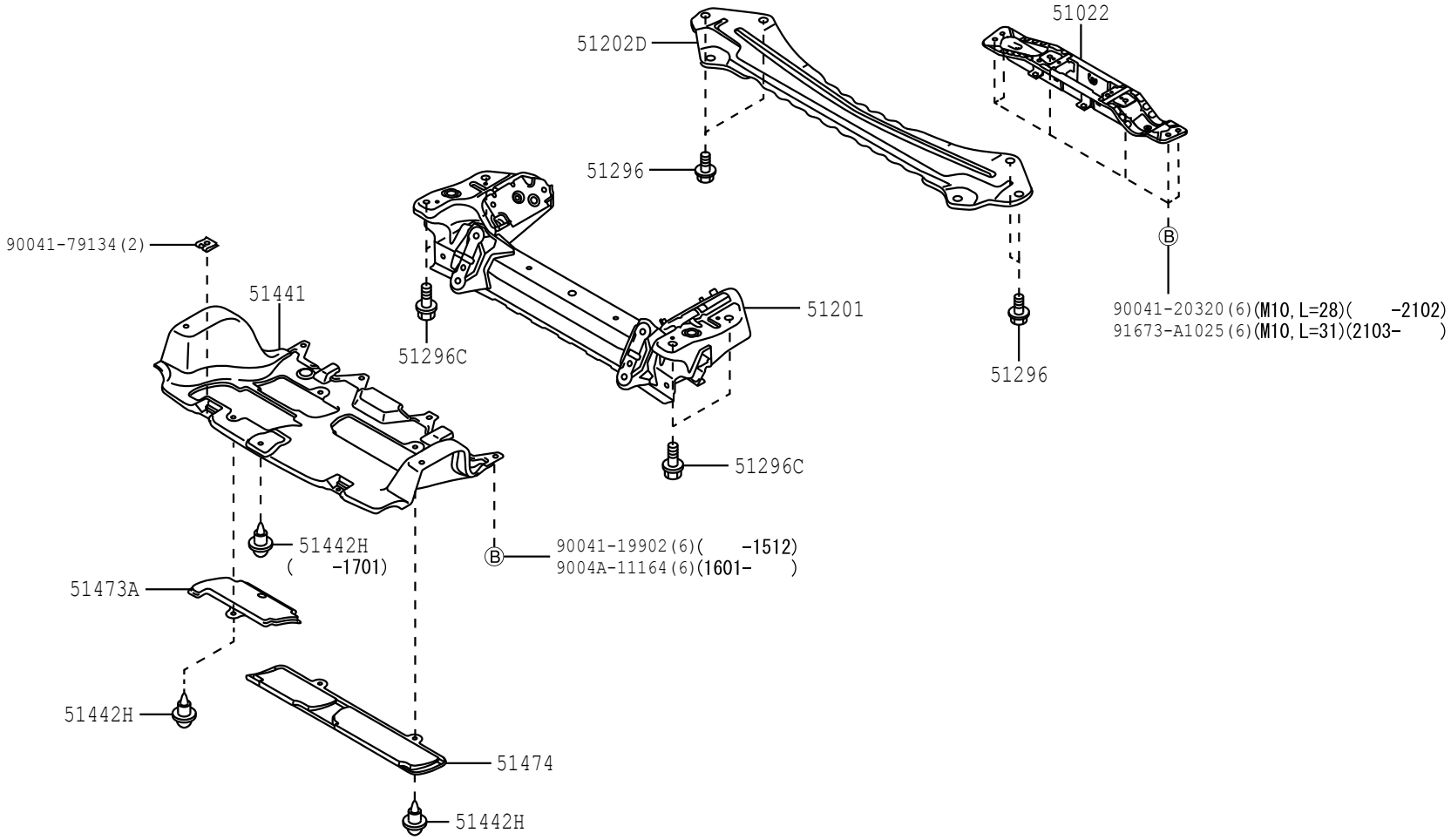

5152

512903-F

PROD_DATE	MODELS	SPEC CODE	DESCRIPTION	R/P	PART NUMBER	QYT	REV_REF FR	REV_REF TO
	+----------+							
	| 51022 | MEMBER SUB-ASSY, ENGINE REAR SUPPORT							
	+----------+							
1111 - 1507	F650..STD				51022-BZ100-	1		
1111 - 1507	F651..E4AT				51022-BZ100-	1		
1111 - 1507	F650..LO				51022-BZ110-	1		
1111 - 1507	F651..5F				51022-BZ110-	1		
1507 - 1607	F650		W/ENGINE UNDER COVER		51022-BZ030-	1		
1507 - 1707	F653		W/ENGINE UNDER COVER		51022-BZ030-	1		
1707 - 1901	F653		L/ENGINE UNDER COVER		51022-BZ050-	1		
1901 -	F65#		L/ENGINE UNDER COVER		51022-BZ050-	1		
	+----------+							
	| 51201 | CROSSMEMBER SUB-ASSY, FRONT SUSPENSION							
	+----------+							
1111 - 1507	F65#				51210-BZ100-	1		
1507 - 1607	F650				51210-BZ140-	1		
1507 - 1808	F653				51210-BZ140-	1		
1809 - 1901	F653				51210-BZ142-	1		
1901 -	F65#				51210-BZ142-	1		
	+----------+							
	| 51202D | CROSSMENBER SUB-ASSY, FRONT SUSPENSION, LOWER							
	+----------+							
1111 - 1507	F65#..5F				51202-BZ090-	1		
1111 - 1507	F651..E4AT				51202-BZ100-	1		
1507 - 1607	F650				51202-BZ090-	1		
1507 - 1901	F653				51202-BZ090-	1		
1901 -	F65#				51202-BZ090-	1		
	+----------+							
	| 51296 | BOLT, FRONT SUSPENSION MEMBER MOUNTING							
	+----------+							
1111 - 1507	F65#				51325-B0010-	4		
1507 - 1508	F65#				51325-B0010-	4		
1509 - 1607	F650				9004A-11315-	4		

FIG.51-52 SUSPENSION CROSSMEMBER & UNDER COVER

PROD_DATE	MODELS	SPEC CODE	DESCRIPTION	R/P	PART NUMBER	QYT	REV_REF FR	REV_REF TO
	+----------+							
	| 51296 | BOLT, FRONT SUSPENSION MEMBER MOUNTING							
	CONTINUED--+							
1509 - 1711	F653				9004A-11315-	4		
1712 - 1901	F653				9004A-10136-	4		
1901 -	F65#				9004A-10136-	4		
	+----------+							
	| 51296C | BOLT, FRONT SUSPENSION MEMBER MOUNTING							
	+----------+							
1111 - 1502	F65#				91642-81235-	4		
1503 - 1507	F65#				90041-20308-	4		
				#	(91642-81235-)	1		
1507 - 1607	F650				9004A-11267-	4		
1507 - 1711	F653				9004A-11267-	4		
1712 - 1901	F653				9004A-10136-	4		
1901 -	F65#				9004A-10136-	4		
	+----------+							
	| 51441 | COVER, ENGINE UNDER, NO.1							
	+----------+							
1401 - 1507	F65#				51441-BZ190-	1		
1507 - 1607	F650				51441-BZ240-	1		
1507 - 1901	F653				51441-BZ240-	1		
1901 -	F65#				51441-BZ240-	1		
	+----------+							
	| 51441D | COVER, ENGINE UNDER							
	+----------+							
1111 - 1401	F65#..5F				51441-BZ010-	1		
1111 - 1401	F651..E4AT				51441-BZ020-	1		
	+----------+							
	| 51442H | CLIP, ENGINE UNDER COVER, NO.2							
	+----------+							
1401 - 1507	F65#				9004A-46323-	5		
1507 - 1607	F650				9004A-46323-	5		
1507 - 1701	F653				9004A-46323-	5		
1701 - 1901	F653				9004A-46323-	4		

FIG.51-52 SUSPENSION CROSSMEMBER & UNDER COVER

PROD_DATE	MODELS	SPEC CODE	DESCRIPTION	R/P	PART NUMBER	QYT	REV_REF FR	REV_REF TO
	+----------+							
	| 51442H | CLIP, ENGINE UNDER COVER, NO.2							
	CONTINUED--+							
1901 -	F65#				9004A-46323-	4		
	+----------+							
	| 51451A | COVER, ENGINE UNDER, CENTER							
	+----------+							
1401 - 1507	F65#				51451-BZ090-	1		
	+----------+							
	| 51473A | COVER SUB-ASSY, ENGINE SIDE, RH							
	+----------+							
1401 - 1507	F65#				51473-BZ010-	1		
1507 - 1607	F650				51473-BZ020-	1		
1507 - 1901	F653				51473-BZ020-	1		
1901 -	F65#				51473-BZ020-	1		
	+----------+							
	| 51474 | COVER SUB-ASSY, ENGINE SIDE, LH							
	+----------+							
1401 - 1507	F65#				51474-BZ010-	1		
1507 - 1607	F650				51474-BZ030-	1		
1507 - 1901	F653				51474-BZ030-	1		
1901 -	F65#				51474-BZ030-	1		

FIG.51-53 SPARE WHEEL CARRIER

(1111-)

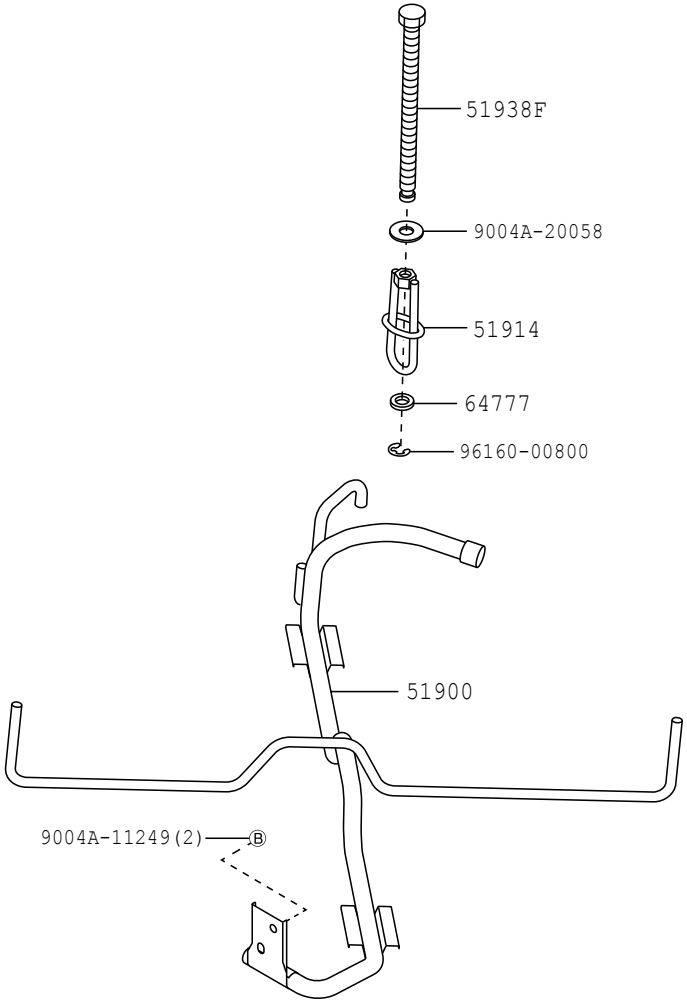

5153

512362-B

FIG.51-53 SPARE WHEEL CARRIER

PROD_DATE	MODELS	SPEC CODE	DESCRIPTION	R/P	PART NUMBER	QYT	REV_REF FR	REV_REF TO
	51900		CARRIER ASSY, SPARE WHEEL					
1111 - 1507	F650				51903-BZ051-	1		
1111 - 1507	F651				51903-BZ061-	1		
1507 - 1607	F650				51903-BZ051-	1		
1507 - 1901	F653				51903-BZ061-	1		
1901 -	F65#				51903-BZ061-	1		
	51914		RETAINER, SPARE WHEEL CARRIER					
1111 - 1507	F65#				51909-BZ031-	1		
1507 - 1607	F650				51909-BZ031-	1		
1507 - 1901	F653				51909-BZ031-	1		
1901 -	F65#				51909-BZ031-	1		
	51938F		BOLT(FOR SPARE WHEEL CARRIER LOCK)					
1111 - 1507	F65#				9004A-10121-	1		
1507 - 1607	F650				9004A-10121-	1		
1507 - 1901	F653				9004A-10121-	1		
1901 -	F65#				9004A-10121-	1		
	64777		CLAMP, SPARE WHEEL COVER					
1111 - 1507	F65#				64777-BZ010-	1		
1507 - 1607	F650				64777-BZ010-	1		
1507 - 1901	F653				64777-BZ010-	1		
1901 -	F65#				64777-BZ010-	1		

(1111-1507)

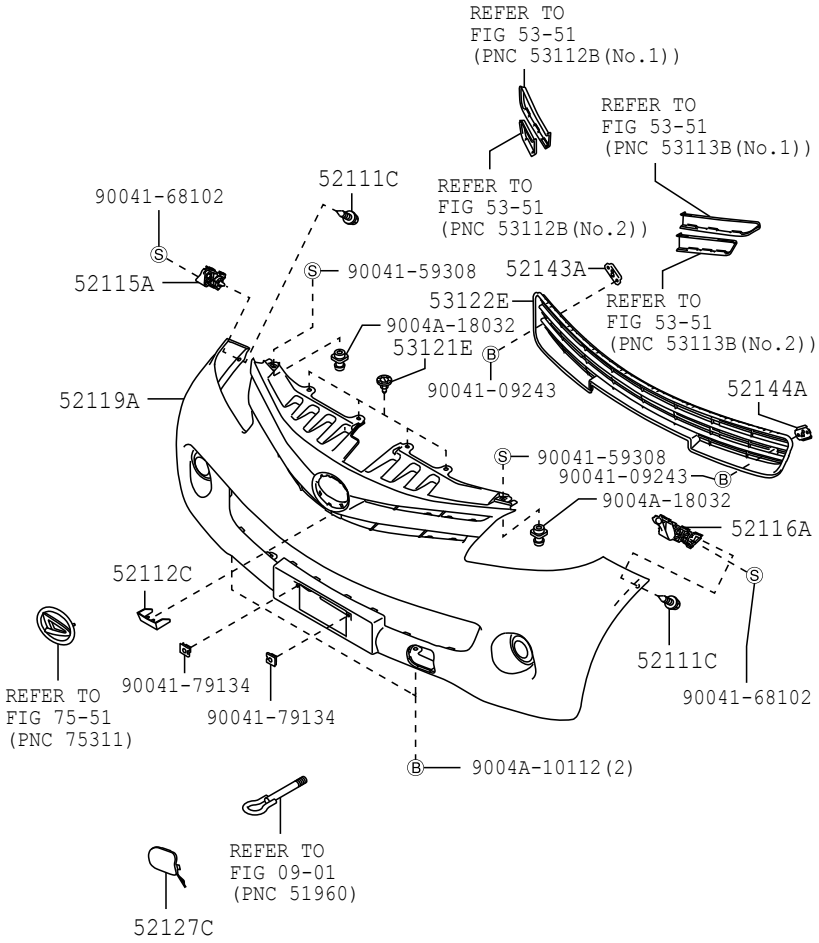

5252

522529-E

(1507-1901)

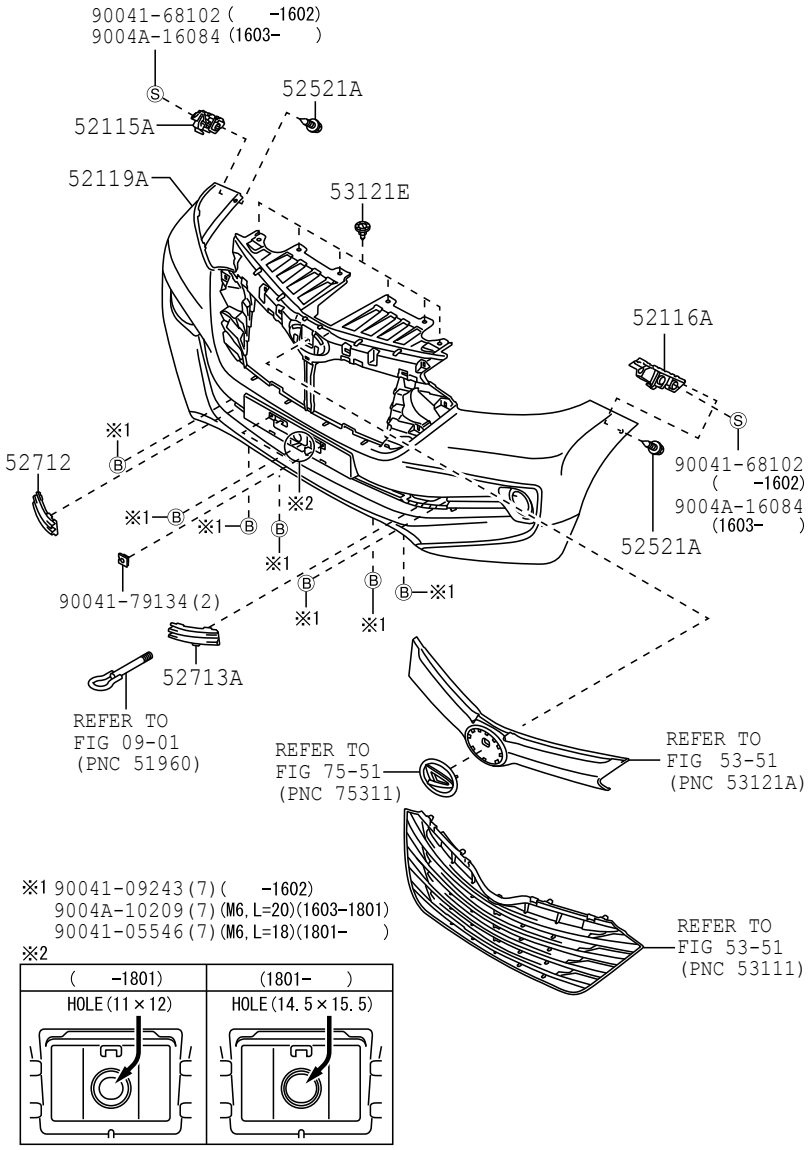

5252

523177-K

(1901-)

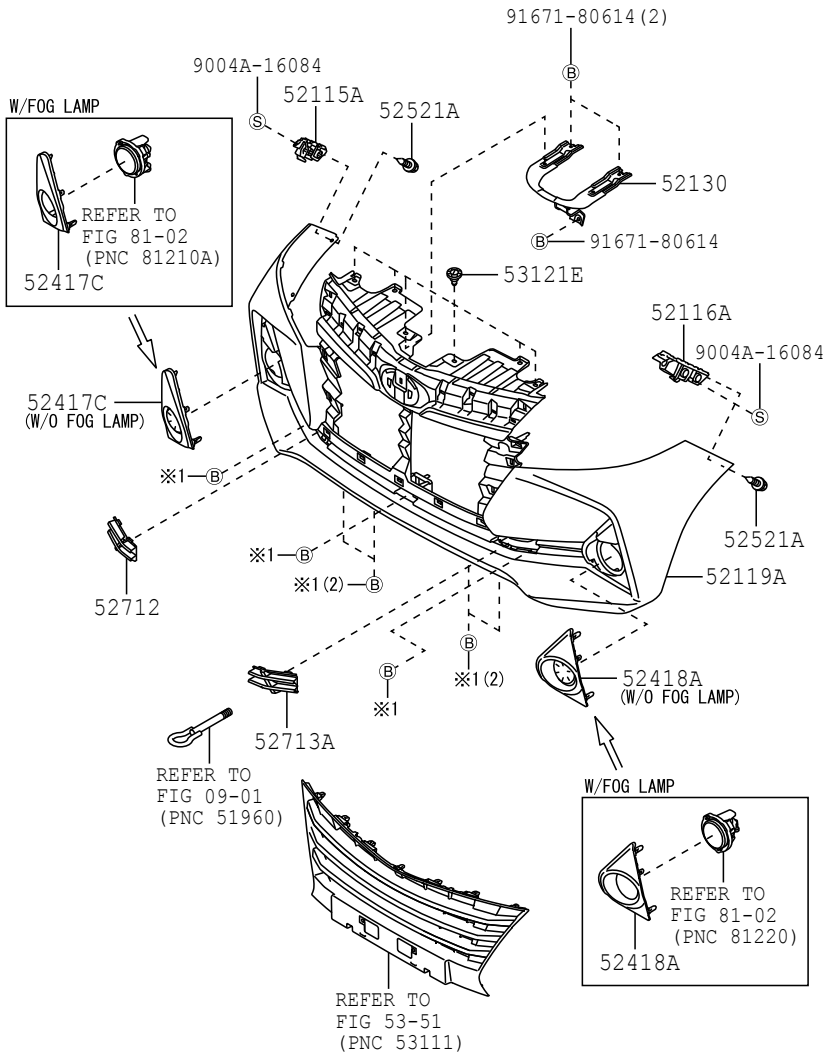

※1 90041-05546

5252

523883-A

FIG.52-52 FRONT BUMPER & BUMPER STAY

PROD_DATE	MODELS	SPEC CODE	DESCRIPTION	R/P	PART NUMBER	QYT	REV_REF FR	REV_REF TO
	52111C BOLT, ROUND HEAD SQUARE NECK(FOR FRONT BUMPER)							
1111 - 1507	F65#				55394-60050-	2		
	52112C EXTENSION, FRONT BUMPER							
1111 - 1507	F65#				52112-BZ080-	1		
	52115A SUPPORT, FRONT BUMPER SIDE, RH							
1111 - 1507	F65#				52115-BZ150-	1		
1507 - 1607	F650				52115-BZ120-	1		
1507 - 1901	F653				52115-BZ120-	1		
1901 -	F65#				52115-BZ120-	1		
	52116A SUPPORT, FRONT BUMPER SIDE, LH							
1111 - 1507	F65#				52116-BZ140-	1		
1507 - 1607	F650				52116-BZ150-	1		
1507 - 1901	F653				52116-BZ150-	1		
1901 -	F65#				52116-BZ150-	1		
	52119A COVER, FRONT BUMPER							
1111 - 1507	F650				52119-BZA70-	1		
1111 - 1507	F651..STD				52119-BZA70-	1		
1111 - 1507	F651..LO				52119-BZA80-	1		
1507 - 1607	F650		L(FOG LAMP)		52119-BZD10-	1		
1507 - 1610	F653..LO		L(FOG LAMP)		52119-BZD10-	1		
1507 - 1801	F653..STD		W(FOG LAMP)		52119-BZD20-	1		
1610 - 1801	F653..LO..5F	B2AE	INDONESIA TAXI,L(FOG LAMP)		52119-BZD10-	1		
1610 - 1801	F653..LO		W(FOG LAMP)		52119-BZD20-	1		
1801 - 1901	F653..LO..5F	B2AE	INDONESIA TAXI,L(FOG LAMP)		52119-BZD11-	1		

PROD_DATE	MODELS	SPEC CODE	DESCRIPTION	R/P	PART NUMBER	QYT	REV_REF FR	REV_REF TO
	+----------+							
	| 52119A | COVER, FRONT BUMPER							
	CONTINUED--+							
1801 - 1901	F653		W(FOG LAMP)		52119-BZD21-	1		
1901 -	F65#		W(FOG LAMP)		52119-BZN60-	1		
	+----------+							
	| 52127C | COVER, FRONT BUMPER HOLE							
	+----------+							
1111 - 1507	F65#				52127-BZ390-	1		
	+----------+							
	| 52130 | BRACKET ASSY, FRONT BUMPER SIDE MOUNTING, RH							
	+----------+							
1901 -	F65#				52130-BZ090-	1		
	+----------+							
	| 52143A | ARM, FRONT BUMPER, INNER RH							
	+----------+							
1111 - 1507	F65#				52143-BZ060-	1		
	+----------+							
	| 52144A | ARM, FRONT BUMPER, INNER LH							
	+----------+							
1111 - 1507	F65#				52144-BZ060-	1		
	+----------+							
	| 52417C | INSERT, FRONT BUMPER GUARD, LOWER RH							
	+----------+							
1901 -	F653..LO..5F	B2AE	INDONESIA TAXI,W/O(FRONT FOG LAMP)		52715-BZ080-	1		
1901 -	F65#		W(FRONT FOG LAMP)		52715-BZ090-	1		
	+----------+							
	| 52418A | INSERT, FRONT BUMPER GUARD, LOWER LH							
	+----------+							
1901 -	F653..LO..5F	B2AE	INDONESIA TAXI,W/O(FRONT FOG LAMP)		52716-BZ080-	1		
1901 -	F65#		W(FRONT FOG LAMP)		52716-BZ090-	1		
	+----------+							
	| 52521A | CLIP(FOR FRONT BUMPER RETAINER)							
	+----------+							
1507 - 1601	F65#				90044-67555-	2		
1602 - 1607	F650				9004A-46380-	2		
				#	(90044-67555-)	1		
1602 - 1901	F653				9004A-46380-	2		
				#	(90044-67555-)	1		

FIG.52-52 FRONT BUMPER & BUMPER STAY

PROD_DATE	MODELS	SPEC CODE	DESCRIPTION	R/P	PART NUMBER	QYT	REV_REF FR	REV_REF TO
	+----------+							
	| 52521A | CLIP(FOR FRONT BUMPER RETAINER)							
	CONTINUED--+							
1901 -	F65#				9004A-46380-	2		
				#	(90044-67555-)	1		
	+----------+							
	| 52712 | MOULDING, FRONT BUMPER SIDE, RH							
	+----------+							
1507 - 1607	F650				52712-BZ110-	1		
1507 - 1901	F653				52712-BZ110-	1		
1901 -	F65#				52712-BZ340-	1		
	+----------+							
	| 52713A | MOULDING, FRONT BUMPER SIDE, LH							
	+----------+							
1507 - 1901	F65#				52713-BZ110-	1		
1901 -	F65#				52713-BZ330-	1		
	+----------+							
	| 53121E | CLIP(FOR FRONT BUMPER), NO.1							
	+----------+							
1111 - 1302	F65#				90044-68320-	4		
				#	(90044-68378-)	1		
1303 - 1507	F65#				9004A-46323-	4		
1507 - 1607	F650				9004A-46323-	6		
1507 - 1901	F653				9004A-46323-	6		
1901 -	F65#				9004A-46323-	6		
	+----------+							
	| 53122E | MOULDING, RADIATOR GRILLE, LOWER							
	+----------+							
1111 - 1507	F65#				53123-BZ060-	1		

FIG.52-53 REAR BUMPER & BUMPER STAY

(1111-1901)

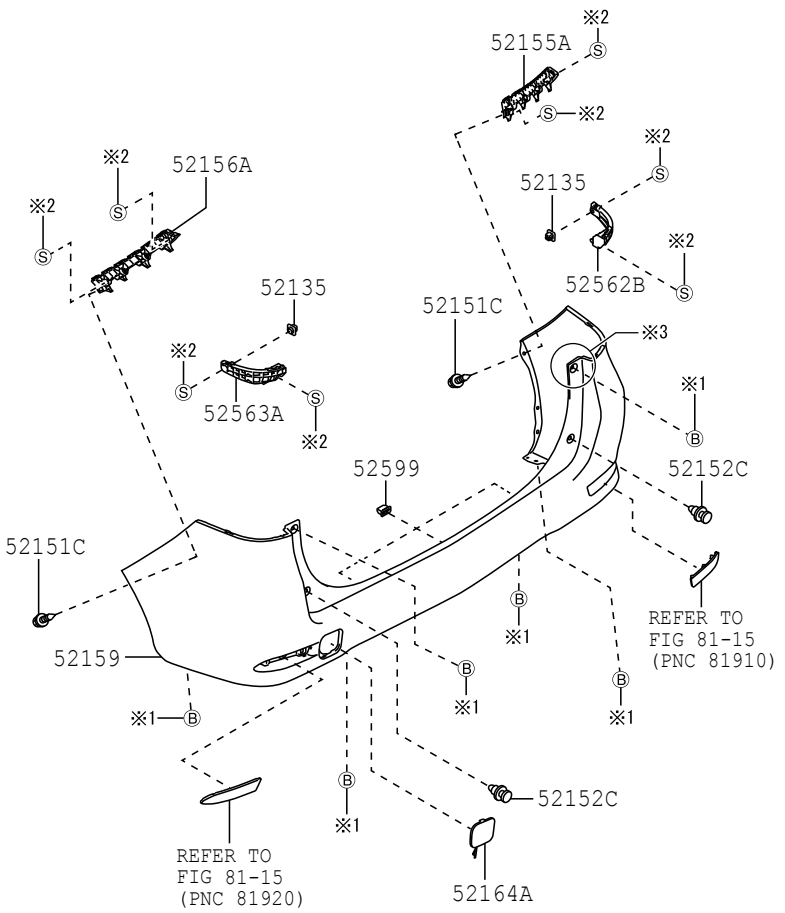

※3

(-1801)	(1801-)
HOLE(8.2×11)	HOLE(11.7×14.5)

※1 9004A-10209(M6,L=20)(-1801)
90041-05546(M6,L=18)(1801-)
※2 9004A-16084

5253

522531-J

FIG.52-53 REAR BUMPER & BUMPER STAY

(1901-)

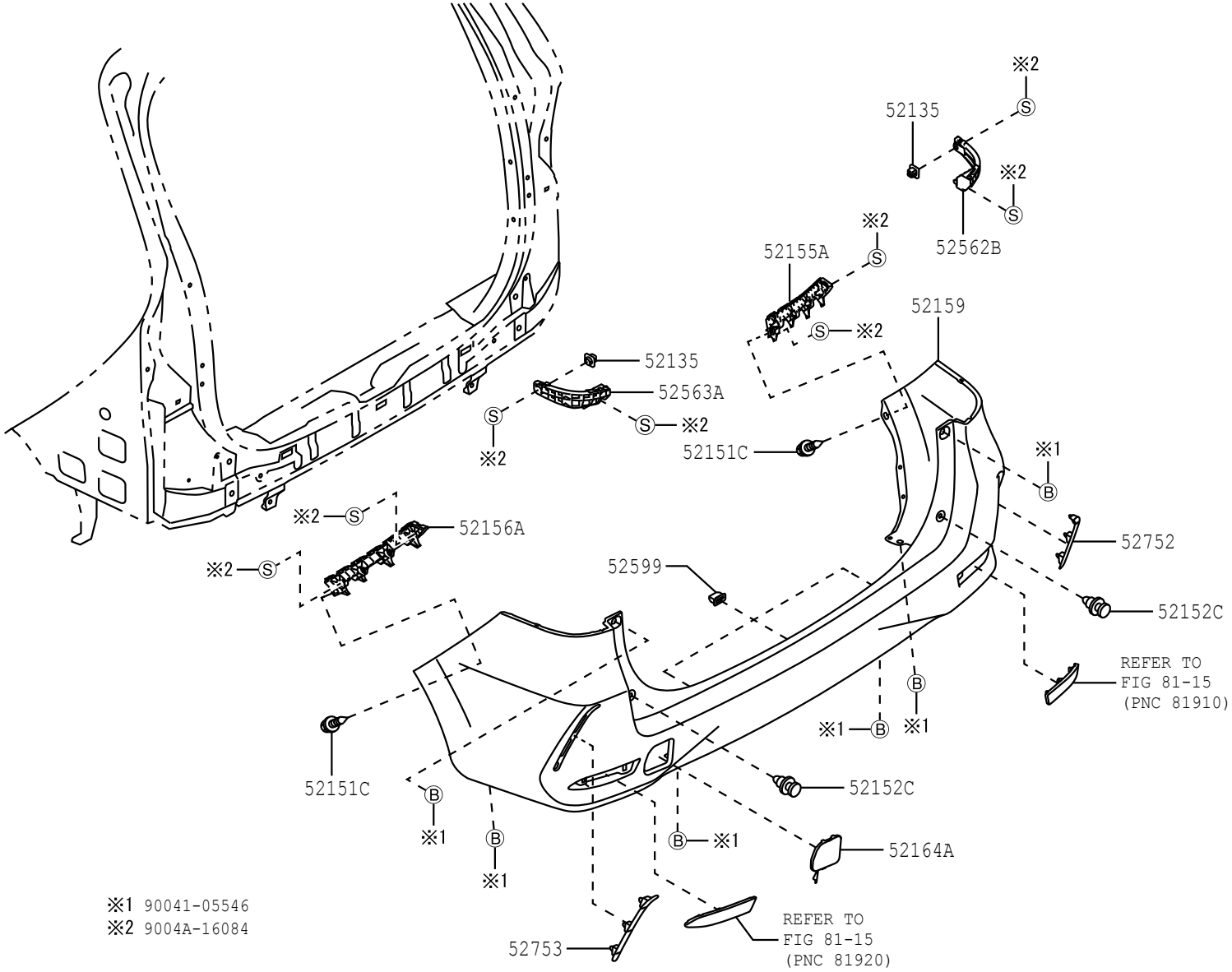

5253

524167

PROD_DATE	MODELS	SPEC CODE	DESCRIPTION	R/P	PART NUMBER	QYT	REV_REF FR	REV_REF TO
	+----------+							
	| 52135 | GROMMET, REAR BUMPER STAY							
	+----------+							
1111 - 1507	F65#				9004A-18034-	2		
				#	(90041-89082-)	1		
1507 - 1607	F650				9004A-18034-	2		
				#	(90041-89082-)	1		
1507 - 1901	F653				9004A-18034-	2		
				#	(90041-89082-)	1		
1901 -	F65#				9004A-18034-	2		
				#	(90041-89082-)	1		
	+----------+							
	| 52151C | BOLT, ROUND HEAD SQUARE NECK(FOR REAR BUMPER)							
	+----------+							
1111 - 1507	F65#				55394-60050-	2		
1507 - 1607	F650				55394-60050-	2		
1507 - 1901	F653				55394-60050-	2		
1901 -	F65#				55394-60050-	2		
	+----------+							
	| 52152C | CLIP, REAR BUMPER SIDE							
	+----------+							
1111 - 1507	F65#				90044-67567-	2		
1507 - 1607	F650				90044-67567-	2		
1507 - 1705	F653				90044-67567-	2		
1706 - 1901	F653				9004A-46334-	2		
				#	(90044-67567-)	1		
1901 -	F65#				9004A-46334-	2		
				#	(90044-67567-)	1		
	+----------+							
	| 52155A | SUPPORT, REAR BUMPER SIDE, RH							
	+----------+							
1111 - 1507	F65#				52155-BZ120-	1		
1507 - 1607	F650				52155-BZ120-	1		
1507 - 1901	F653				52155-BZ120-	1		
1901 -	F65#				52155-BZ120-	1		

FIG.52-53 REAR BUMPER & BUMPER STAY

PROD_DATE	MODELS	SPEC CODE	DESCRIPTION	R/P	PART NUMBER	QYT	REV_REF FR	REV_REF TO
	+----------+							
	| 52156A | SUPPORT, REAR BUMPER SIDE, LH							
	+----------+							
1111 - 1507	F65#				52156-BZ120-	1		
1507 - 1607	F650				52156-BZ120-	1		
1507 - 1901	F653				52156-BZ120-	1		
1901 -	F65#				52156-BZ120-	1		
	+----------+							
	| 52159 | COVER, REAR BUMPER							
	+----------+							
1111 - 1507	F65#				52159-BZ140-	1		
1507 - 1607	F650		L/RR FOG LAMP		52159-BZ140-	1		
1507 - 1801	F653		L/RR FOG LAMP		52159-BZ140-	1		
1801 - 1901	F653		L/RR FOG LAMP		52159-BZ141-	1		
1901 -	F65#		L/RR FOG LAMP		52159-BZJ60-	1		
	+----------+							
	| 52164A | PLATE, REAR BUMPER, LH							
	+----------+							
1111 - 1507	F65#				52164-BZ130-	1		
1507 - 1607	F650				52164-BZ130-	1		
1507 - 1901	F653				52164-BZ130-	1		
1901 -	F65#				52164-BZ230-	1		
	+----------+							
	| 52562B | RETAINER, REAR BUMPER, UPPER RH							
	+----------+							
1111 - 1507	F65#				52562-BZ010-	1		
1507 - 1607	F650				52562-BZ010-	1		
1507 - 1901	F653				52562-BZ010-	1		
1901 -	F65#				52562-BZ010-	1		
	+----------+							
	| 52563A | RETAINER, REAR BUMPER, UPPER LH							
	+----------+							
1111 - 1507	F65#				52563-BZ010-	1		
1507 - 1607	F650				52563-BZ010-	1		
1507 - 1901	F653				52563-BZ010-	1		

FIG.52-53 REAR BUMPER & BUMPER STAY

PROD_DATE	MODELS	SPEC CODE	DESCRIPTION	R/P	PART NUMBER	QYT	REV_REF FR	REV_REF TO
	+----------+							
	| 52563A |		RETAINER, REAR BUMPER, UPPER LH					
	CONTINUED--+							
1901 -	F65#				52563-BZ010-	1		
	+----------+							
	| 52599 |		STOPPER, REAR BUMPER, UPPER					
	+----------+							
1111 - 1507	F65#				90044-67499-	3		
1507 - 1508	F65#				90044-67499-	3		
1509 - 1607	F650				9004A-46356-	3		
1509 - 1901	F653				9004A-46356-	3		
1901 -	F65#				9004A-46356-	3		
	+----------+							
	| 52752 |		MOULDING, REAR BUMPER SIDE, RH					
	+----------+							
1901 -	F65#				52752-BZ030-	1		
	+----------+							
	| 52753 |		MOULDING, REAR BUMPER SIDE, LH					
	+----------+							
1901 -	F65#				52753-BZ030-	1		

FIG. 53-51 RADIATOR GRILLE

(1111-1507)

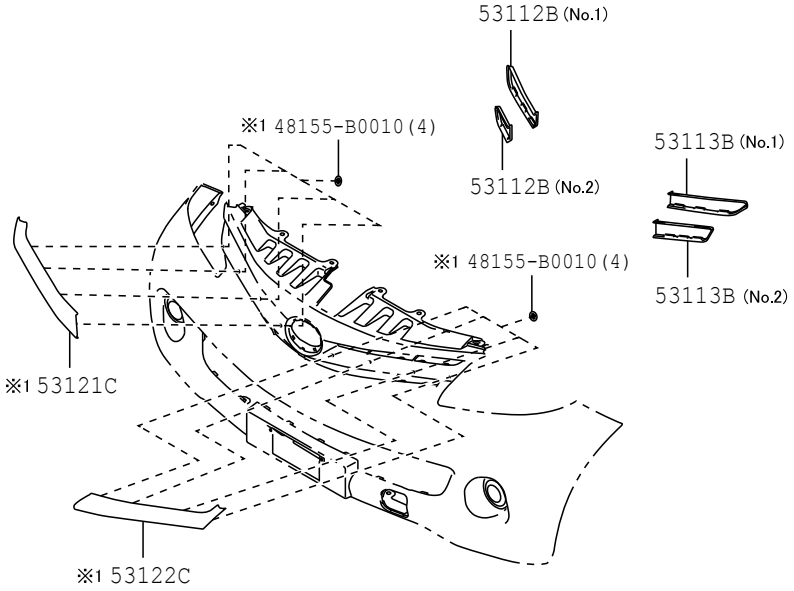

※1 W/RADIATOR GRILLE PLATE

5351 533567

FIG. 53-51 RADIATOR GRILLE

(1507-1901)

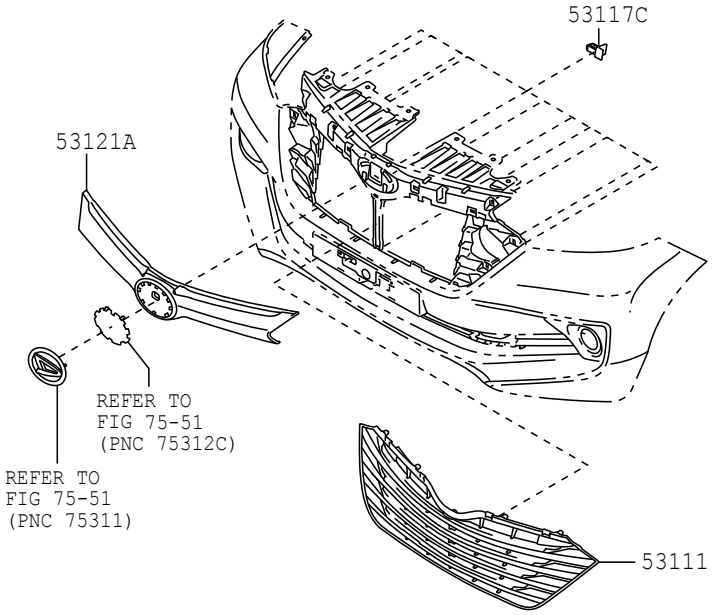

5351 534586

(1901-)

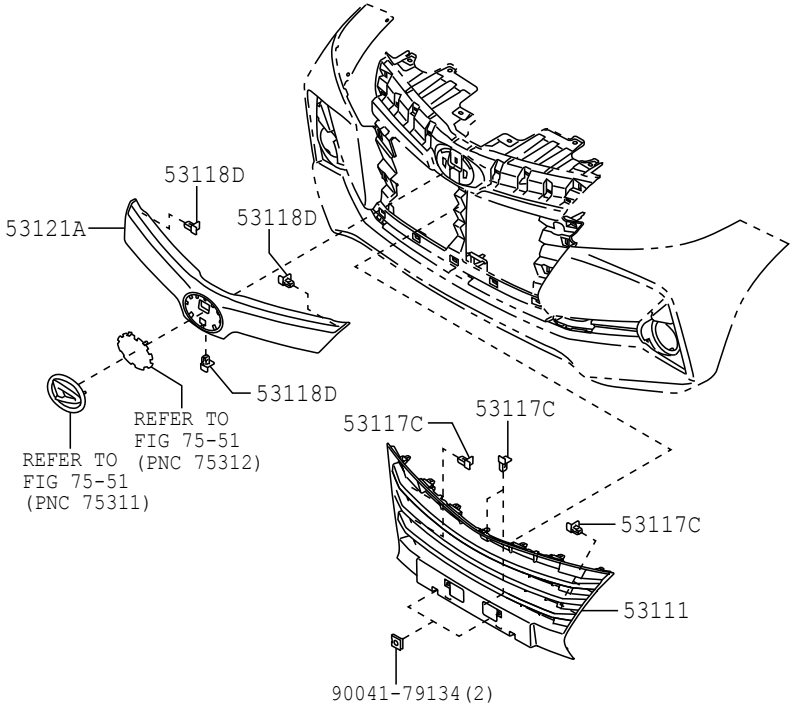

5351 535839

FIG.53-51 RADIATOR GRILLE

PROD_DATE	MODELS	SPEC CODE	DESCRIPTION	R/P	PART NUMBER	QYT	REV_REF FR	REV_REF TO
	53111 GRILLE, RADIATOR							
1507 - 1901	F65#				53111-BZ370-	1		
1901 -	F65#				53111-BZ500-	1		
	53112B GRILLE, RADIATOR SIDE, RH							
1111 - 1507	F65#		NO.1		53112-BZ080-	1		
1111 - 1507	F65#		NO.2		53112-BZ090-	1		
	53113B GRILLE, RADIATOR SIDE, LH							
1111 - 1507	F65#		NO.1		53113-BZ050-	1		
1111 - 1507	F65#		NO.2		53113-BZ060-	1		
	53117C RETAINER, RADIATOR GRILLE, NO.1							
1507 - 1901	F65#				76854-BZ010-	11		
				#	(76854-87401-)	1		
1901 -	F65#				76854-BZ010-	6		
				#	(76854-87401-)	1		
	53118D RETAINER, RADIATOR GRILLE, NO.2							
1901 -	F65#				76854-BZ010-	3		
				#	(76854-87401-)	1		
	53121A MOULDING, RADIATOR GRILLE							
1507 - 1901	F653..STD				53121-BZ220-	1		
1507 - 1901	F650		GRAY ME.(1E7 ,1G3 ,3Q3 ,4U3 ,8X2 ,T23 ,W09 ,X12)		53121-BZ240-B1	1		
1507 - 1901	F653..LO		GRAY ME.(1E7 ,1G3 ,3Q3 ,4U3 ,8X2 ,T23 ,W09 ,X12)		53121-BZ240-B1	1		
1901 -	F653..LO		GRAY ME.(1E7 ,1G3 ,3Q3 ,4T3 ,B79 ,W09 ,W24 ,X12)		53121-BZ520-B0	1		
1901 -	F65#..STD				53121-BZ530-	1		

FIG.53-51 RADIATOR GRILLE

PROD_DATE	MODELS	SPEC CODE	DESCRIPTION	R/P	PART NUMBER	QYT	REV_REF FR	REV_REF TO
	+----------+							
	| 53121C | PLATE, RADIATOR GRILLE FINISH, RH							
	+----------+							
1111 - 1507	F651..LO				53121-BZ120-	1		
	+----------+							
	| 53122C | PLATE, RADIATOR GRILLE FINISH, LH							
	+----------+							
1111 - 1507	F651..LO				53122-BZ060-	1		

(1111-)

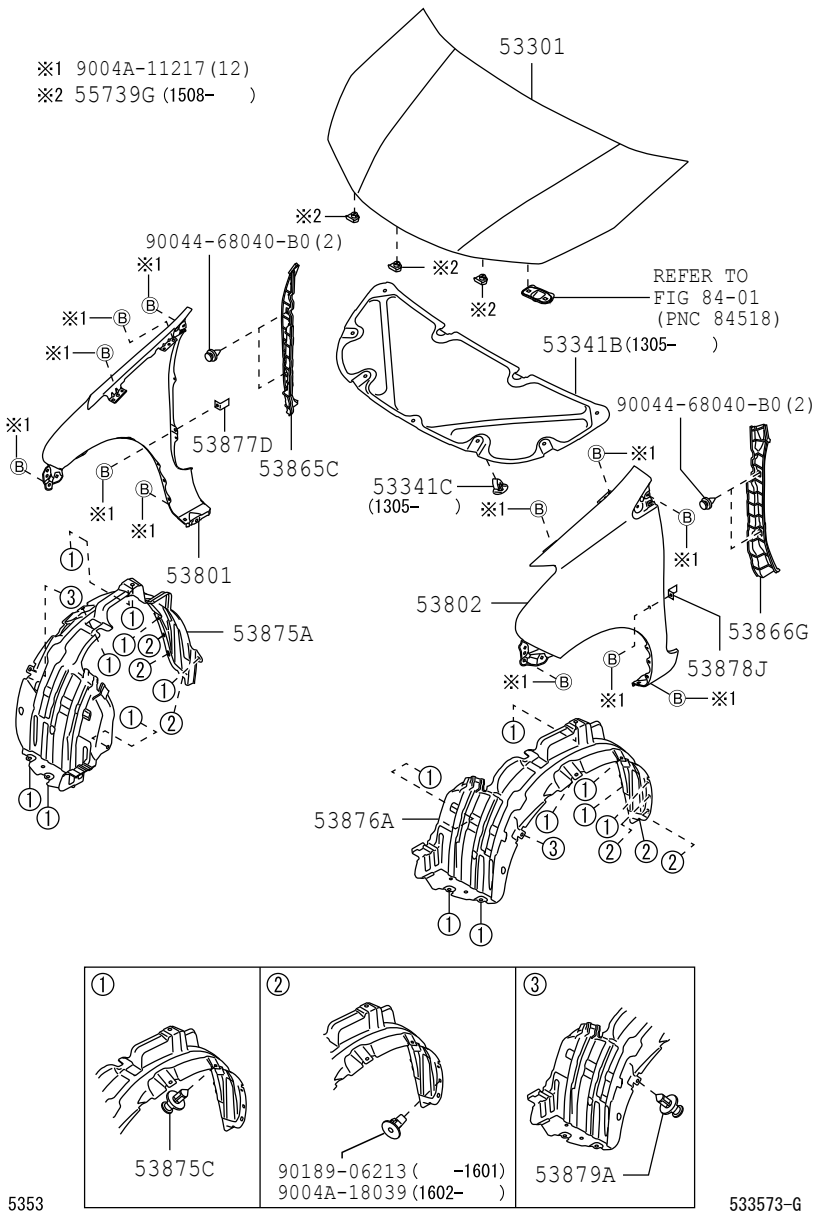

5353 533573-G

PROD_DATE	MODELS	SPEC CODE	DESCRIPTION	R/P	PART NUMBER	QYT	REV_REF FR	REV_REF TO
	53301 HOOD SUB-ASSY							
1111 - 1507	F65#				53301-BZ220-	1		
1507 - 1607	F650				53301-BZ290-	1		
1507 - 1901	F653				53301-BZ290-	1		
1901 -	F65#				53301-BZ290-	1		
	53341B INSULATOR, HOOD							
1305 - 1310	F651				53341-BZ040-	1		
1305 - 1507	F650				53341-BZ040-	1		
1507 - 1607	F650				53341-BZ090-	1		
1507 - 1705	F653				53341-BZ090-	1		
1706 - 1901	F653				53341-BZ091-	1		
1901 -	F65#				53341-BZ091-	1		
	53341C CLIP(FOR HOOD INSULATOR)							
1305 - 1310	F651				90044-68280-	7		
1305 - 1507	F650				90044-68280-	7		
1507 - 1510	F65#				90044-68280-	7		
1511 - 1607	F650				9004A-46258-	7		
1511 - 1901	F653				9004A-46258-	7		
1901 -	F65#				9004A-46258-	7		
	53801 FENDER SUB-ASSY, FRONT RH							
1111 - 1507	F65#				53811-BZ220-	1		
1507 - 1607	F650				53811-BZ340-	1		
1507 - 1901	F653				53811-BZ340-	1		
1901 -	F65#				53811-BZ340-	1		

PROD_DATE	MODELS	SPEC CODE	DESCRIPTION	R/P	PART NUMBER	QYT	REV_REF FR	REV_REF TO
	+----------+							
	| 53802 | FENDER SUB-ASSY, FRONT LH							
	+----------+							
1111 - 1507	F65#				53812-BZ220-	1		
1507 - 1607	F650				53812-BZ280-	1		
1507 - 1901	F653				53812-BZ280-	1		
1901 -	F65#				53812-BZ280-	1		
	+----------+							
	| 53865C | PLATE, FRONT FENDER EXTENSION, RH							
	+----------+							
1111 - 1507	F651				53865-BZ020-	1		
1111 - 1507	F650..LO				53865-BZ020-	1		
1305 - 1507	F650..STD				53865-BZ020-	1		
1507 - 1607	F650				53865-BZ020-	1		
1507 - 1901	F653				53865-BZ020-	1		
1901 -	F65#				53865-BZ020-	1		
	+----------+							
	| 53866G | PLATE, FRONT FENDER EXTENSION, LH							
	+----------+							
1111 - 1507	F651				53866-BZ050-	1		
1111 - 1507	F650..LO				53866-BZ050-	1		
1305 - 1507	F650..STD				53866-BZ050-	1		
1507 - 1607	F650				53866-BZ050-	1		
1507 - 1901	F653				53866-BZ050-	1		
1901 -	F65#				53866-BZ050-	1		
	+----------+							
	| 53875A | LINER, FRONT FENDER, RH							
	+----------+							
1111 - 1507	F65#				53875-BZ190-	1		
1507 - 1607	F650				53875-BZ270-	1		
1507 - 1901	F653				53875-BZ270-	1		
1901 -	F65#				53875-BZ270-	1		

FIG.53-53 HOOD & FRONT FENDER

PROD_DATE	MODELS	SPEC CODE	DESCRIPTION	R/P	PART NUMBER	QYT	REV_REF FR	REV_REF TO
	+----------+							
	| 53875C | CLIP, FRONT FENDER LINER							
	+----------+							
1111 - 1302	F65#				90044-68320-	16		
				#	(90044-68378-)	1		
1303 - 1507	F65#				9004A-46323-	16		
1507 - 1607	F650				9004A-46323-	16		
1507 - 1901	F653				9004A-46323-	16		
1901 -	F65#				9004A-46323-	16		
	+----------+							
	| 53876A | LINER, FRONT FENDER, LH							
	+----------+							
1111 - 1507	F65#				53876-BZ190-	1		
1507 - 1607	F650				53876-BZ270-	1		
1507 - 1901	F653				53876-BZ270-	1		
1901 -	F65#				53876-BZ270-	1		
	+----------+							
	| 53877D | BRACKET, FRONT FENDER LINER, RH							
	+----------+							
1111 - 1507	F65#				58139-BZ060-	1		
1507 - 1901	F65#				58139-BZ060-	1		
1901 -	F65#				58139-BZ060-	1		
	+----------+							
	| 53878J | BRACKET, FRONT FENDER LINER, LH							
	+----------+							
1111 - 1507	F65#				58139-BZ060-	1		
1507 - 1607	F650				58139-BZ060-	1		
1507 - 1901	F653				58139-BZ060-	1		
1901 -	F65#				58139-BZ060-	1		
	+----------+							
	| 53879A | RETAINER, FRONT FENDER LINER							
	+----------+							
1111 - 1302	F65#				90044-68320-	2		
				#	(90044-68378-)	1		
1303 - 1505	F65#				9004A-46323-	2		

PROD_DATE	MODELS	SPEC CODE	DESCRIPTION	R/P	PART NUMBER	QYT	REV_REF FR	REV_REF TO
	+----------+							
	| 53879A | RETAINER, FRONT FENDER LINER							
	CONTINUED--+							
1505 - 1507	F65#				9004A-46352-	2		
				#	(9004A-46323-)	1		
1507 - 1511	F65#				9004A-46323-	2		
1512 - 1607	F650				9004A-46352-	2		
				#	(9004A-46323-)	1		
1512 - 1901	F653				9004A-46352-	2		
				#	(9004A-46323-)	1		
1901 - 1908	F65#				9004A-46352-	2		
				#	(9004A-46323-)	1		
1909 -	F65#				9004A-46323-	2		
	+----------+							
	| 55739G | STOPPER, HOO							
	+----------+ D							
1507 - 1607	F650				55738-52050-	3		
1507 - 1901	F653				55738-52050-	3		
1901 -	F65#				55738-52050-	3		

(1111-)

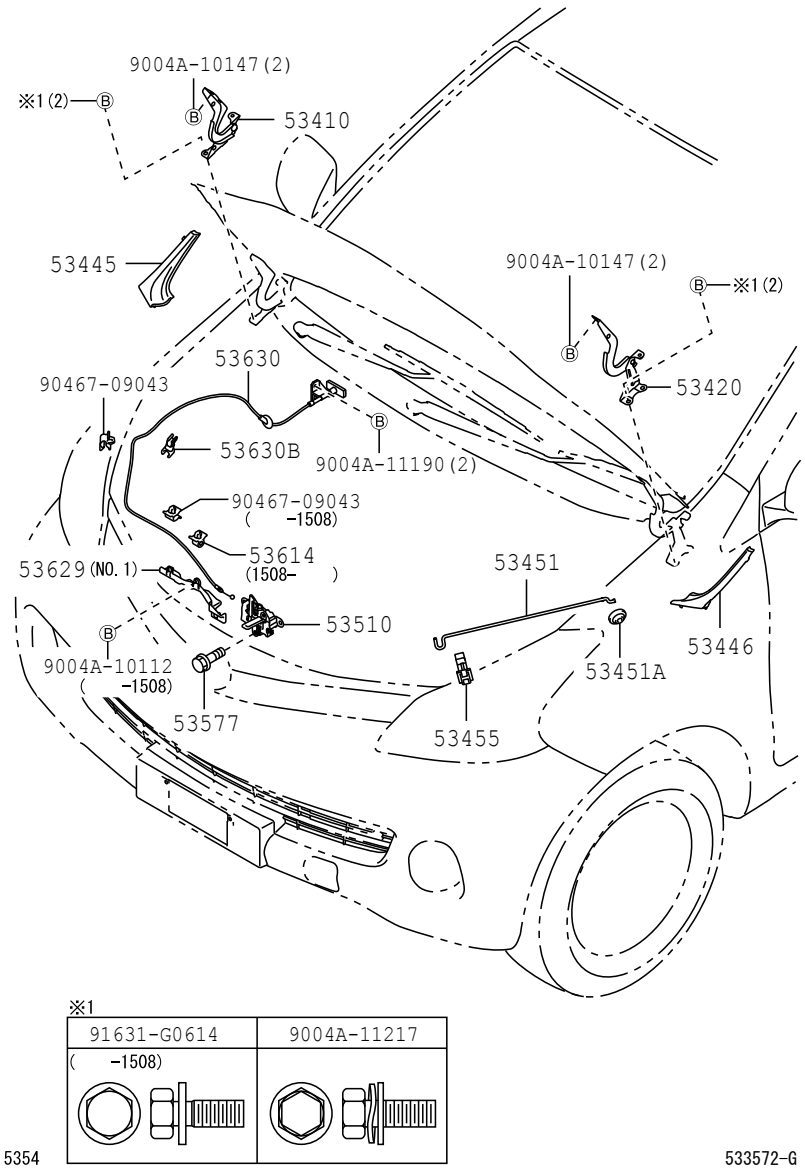

5354

533572-G

PROD_DATE	MODELS	SPEC CODE	DESCRIPTION	R/P	PART NUMBER	QYT	REV_REF FR	REV_REF TO
	53410	HINGE ASSY, HOOD, RH						
1111 - 1507	F65#				53410-BZ040-	1		
1507 - 1607	F650				53410-BZ060-	1		
1507 - 1901	F653				53410-BZ060-	1		
1901 -	F65#				53410-BZ060-	1		
	53420	HINGE ASSY, HOOD, LH						
1111 - 1507	F65#				53420-BZ040-	1		
1507 - 1607	F650				53420-BZ060-	1		
1507 - 1901	F653				53420-BZ060-	1		
1901 -	F65#				53420-BZ060-	1		
	53445	COVER, HOOD HINGE, RH						
1111 - 1206	F65#				53445-BZ020-	1		
1207 - 1507	F65#				53445-BZ021-	1		
1507 - 1607	F650				53445-BZ060-	1		
1507 - 1901	F653				53445-BZ060-	1		
1901 -	F65#				53445-BZ060-	1		
	53446	COVER, HOOD HINGE, LH						
1111 - 1206	F65#				53446-BZ020-	1		
1207 - 1507	F65#				53446-BZ021-	1		
1507 - 1607	F650				53446-BZ060-	1		
1507 - 1901	F653				53446-BZ060-	1		
1901 -	F65#				53446-BZ060-	1		
	53451	ROD, HOOD SUPPORT						
1111 - 1507	F65#				53451-BZ160-	1		
1507 - 1607	F650				53451-BZ120-	1		

PROD_DATE	MODELS	SPEC CODE	DESCRIPTION	R/P	PART NUMBER	QYT	REV_REF FR	REV_REF TO
	+----------+							
	| 53451 | ROD, HOOD SUPPORT							
	CONTINUED--+							
1507 - 1901	F653				53451-BZ120-	1		
1901 -	F65#				53451-BZ120-	1		
	+----------+							
	| 53451A | GROMMET(FOR HOOD SUPPORT ROD)							
	+----------+							
1111 - 1507	F65#				9004A-48054-	1		
1507 - 1607	F650				90044-80667-	1		
1507 - 1901	F653				90044-80667-	1		
1901 -	F65#				90044-80667-	1		
	+----------+							
	| 53455 | CLAMP, HOOD SUPPORT ROD							
	+----------+							
1111 - 1507	F65#				53455-BZ080-	1		
				#	(53455-97401-)	1		
1507 - 1607	F650				53455-BZ130-	1		
1507 - 1901	F653				53455-BZ130-	1		
1901 -	F65#				53455-BZ130-	1		
	+----------+							
	| 53510 | LOCK ASSY, HOOD							
	+----------+							
1111 - 1507	F65#				53510-BZ170-	1		
1507 - 1607	F650				53510-BZ250-	1		
1507 - 1901	F653				53510-BZ250-	1		
1901 -	F65#				53510-BZ250-	1		
	+----------+							
	| 53577 | BOLT, HOOD LOCK							
	+----------+							
1111 - 1209	F65#		M6,L=14		90041-19677-	3		
1111 - 1507	F65#		M6,L=12		90041-05207-	3		
1210 - 1507	F65#		M6,L=14		9004A-11253-	3		
				#	(90041-19677-)	1		
1507 - 1510	F65#		M6,L=12		90041-05207-	3		
1507 - 1607	F650		M6,L=16		9004A-11235-	3		

FIG.53-54 HOOD LOCK & HINGE

PROD_DATE	MODELS	SPEC CODE	DESCRIPTION	R/P	PART NUMBER	QYT	REV_REF FR	REV_REF TO
	+----------+							
	| 53577 | BOLT, HOOD LOCK							
	CONTINUED--+							
1511 - 1607	F650		M6,L=12		9004A-10091-	3		
				#	(90041-05207-)	1		
1507 - 1901	F653		M6,L=16		9004A-11235-	3		
1511 - 1901	F653		M6,L=12		9004A-10091-	3		
				#	(90041-05207-)	1		
1901 -	F65#		M6,L=12		9004A-10091-	3		
				#	(90041-05207-)	1		
1901 -	F65#		M6,L=16		9004A-11235-	3		
	+----------+							
	| 53614 | CLAMP, HOOD LOCK CONTROL CABLE							
	+----------+							
1507 - 1607	F650				90044-64659-	1		
1507 - 1901	F653				90044-64659-	1		
1901 -	F65#				90044-64659-	1		
	+----------+							
	| 53629 | COVER, HOOD LOCK CONTROL CABLE							
	+----------+							
1111 - 1507	F65#		NO.1		53629-BZ020-	1		
	+----------+							
	| 53630 | CABLE ASSY, HOOD LOCK CONTROL							
	+----------+							
1111 - 1507	F65#				53630-BZ160-	1		
1507 - 1607	F650				53630-BZ230-	1		
1507 - 1901	F653				53630-BZ230-	1		
1901 -	F65#				53630-BZ230-	1		
	+----------+							
	| 53630B | CLAMP(FOR HOOD LOCK CONTROL CABLE)							
	+----------+							
1111 - 1505	F65#				90044-64634-	1		
1506 - 1507	F65#				9004A-46314-	1		
				#	(90044-64634-)	1		
1507 - 1607	F650				90044-64879-	1		
1507 - 1705	F653				90044-64879-	1		
1706 - 1901	F653				9004A-46333-	1		

FIG.53-54 HOOD LOCK & HINGE

PROD_DATE	MODELS	SPEC CODE	DESCRIPTION	R/P	PART NUMBER	QYT	REV_REF	
							FR	TO
	+----------+ | 53630B | CLAMP(FOR HOOD LOCK CONTROL CABLE) CONTINUED--+							
1901 -	F65#				9004A-46333-	1		

FIG. 53-55 FRONT FENDER APRON & DASH PANEL

(1111-1507)

ILLUST NO. 1 OF 2

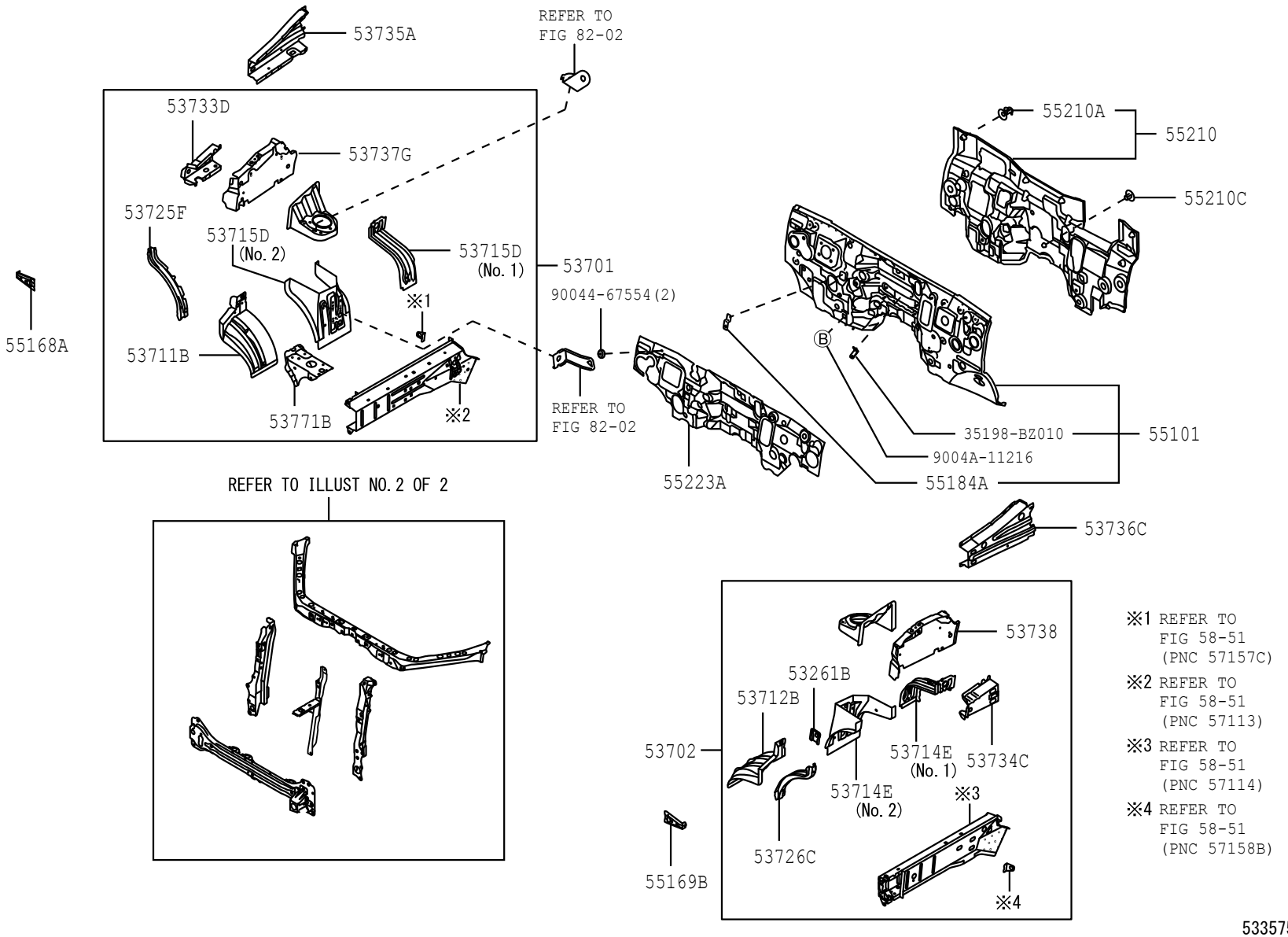

※1 REFER TO
FIG 58-51
(PNC 57157C)

※2 REFER TO
FIG 58-51
(PNC 57113)

※3 REFER TO
FIG 58-51
(PNC 57114)

※4 REFER TO
FIG 58-51
(PNC 57158B)

5355

533575-F

FIG.53-55 FRONT FENDER APRON & DASH PANEL

(1111-1507)

ILLUST NO. 2 OF 2

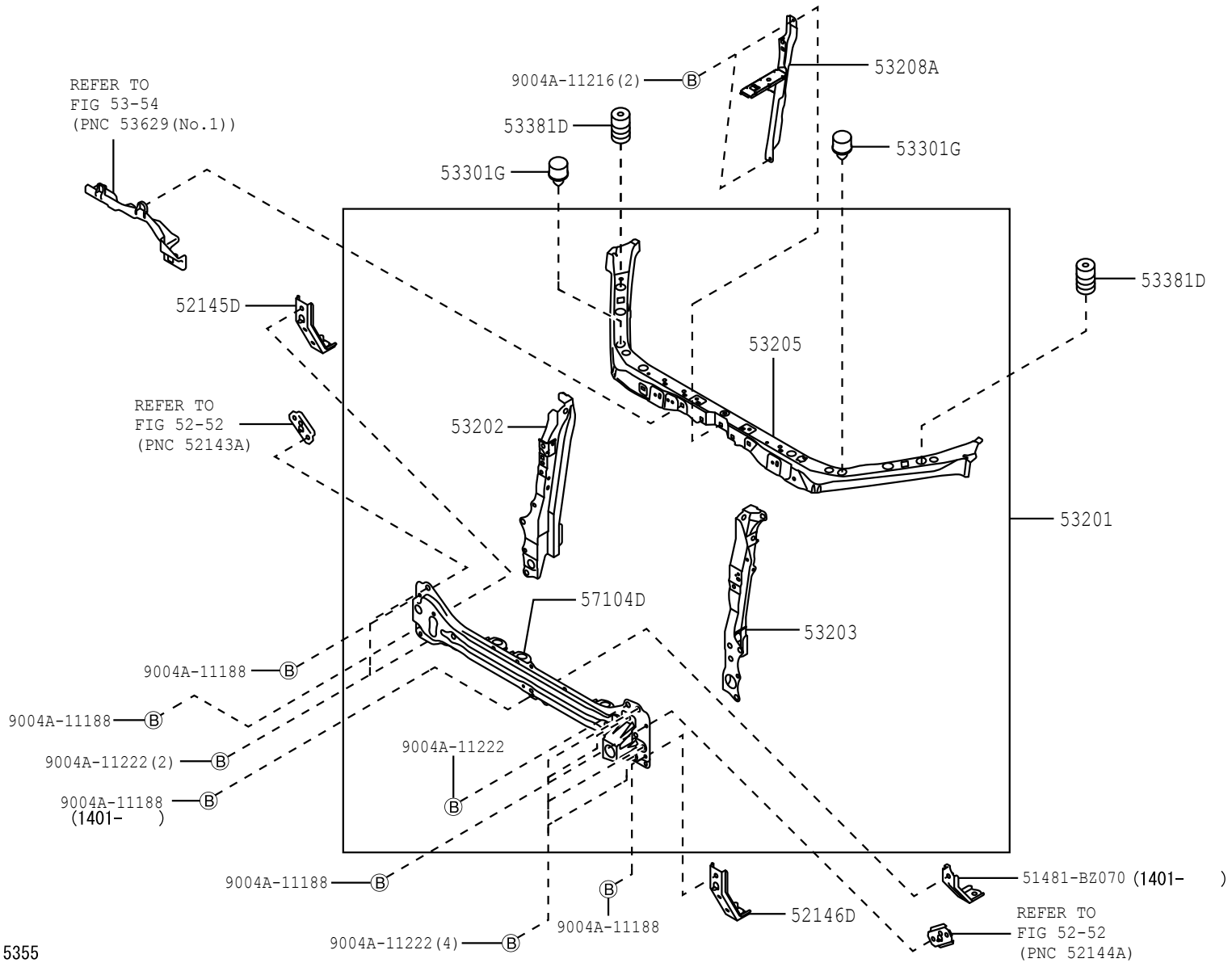

5355

533631-F

FIG. 53-55 FRONT FENDER APRON & DASH PANEL

(1507-)

ILLUST NO. 1 OF 2

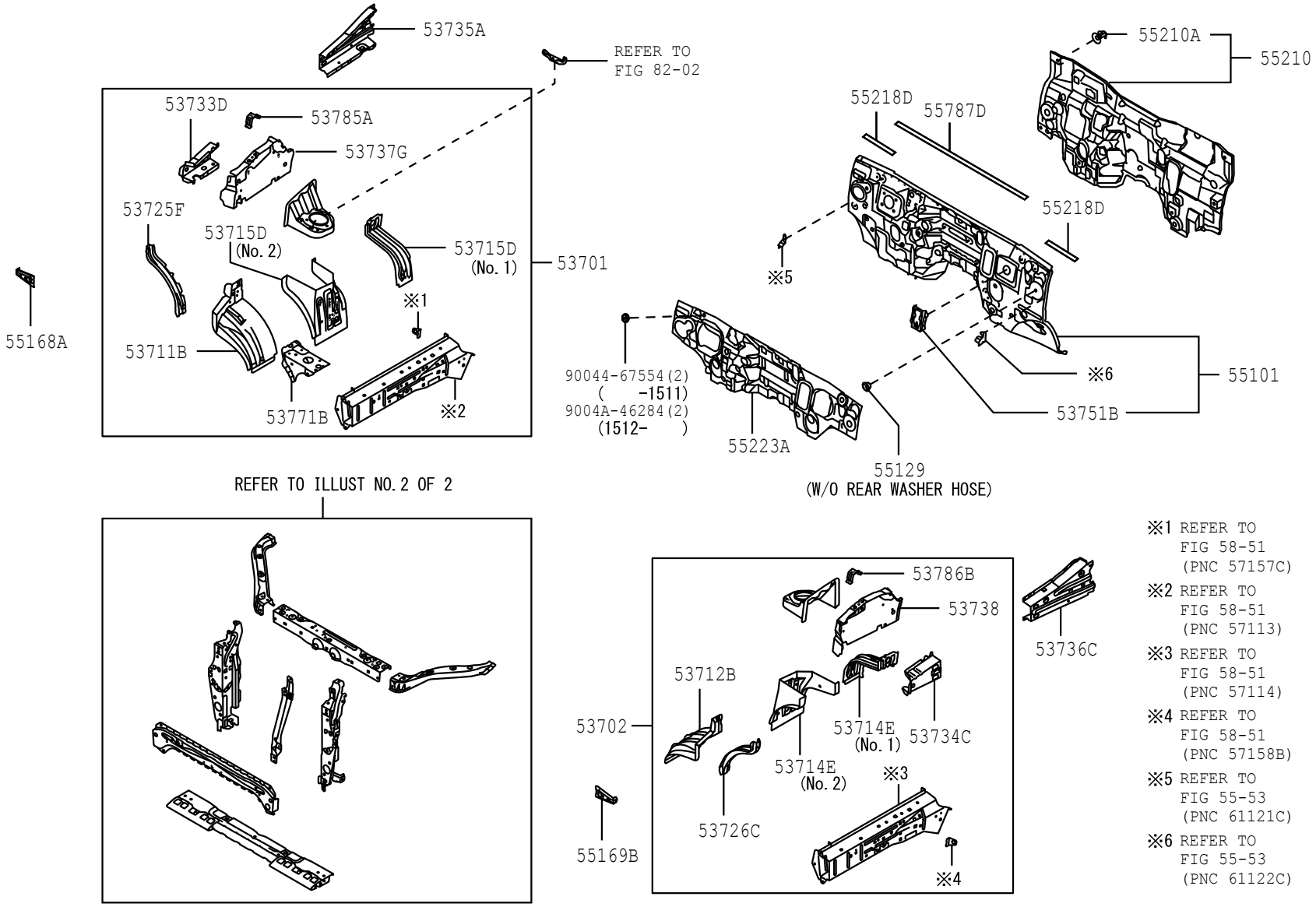

※1 REFER TO
FIG 58-51
(PNC 57157C)

※2 REFER TO
FIG 58-51
(PNC 57113)

※3 REFER TO
FIG 58-51
(PNC 57114)

※4 REFER TO
FIG 58-51
(PNC 57158B)

※5 REFER TO
FIG 55-53
(PNC 61121C)

※6 REFER TO
FIG 55-53
(PNC 61122C)

FIG.53-55 FRONT FENDER APRON & DASH PANEL

(1507-)

ILLUST NO. 2 OF 2

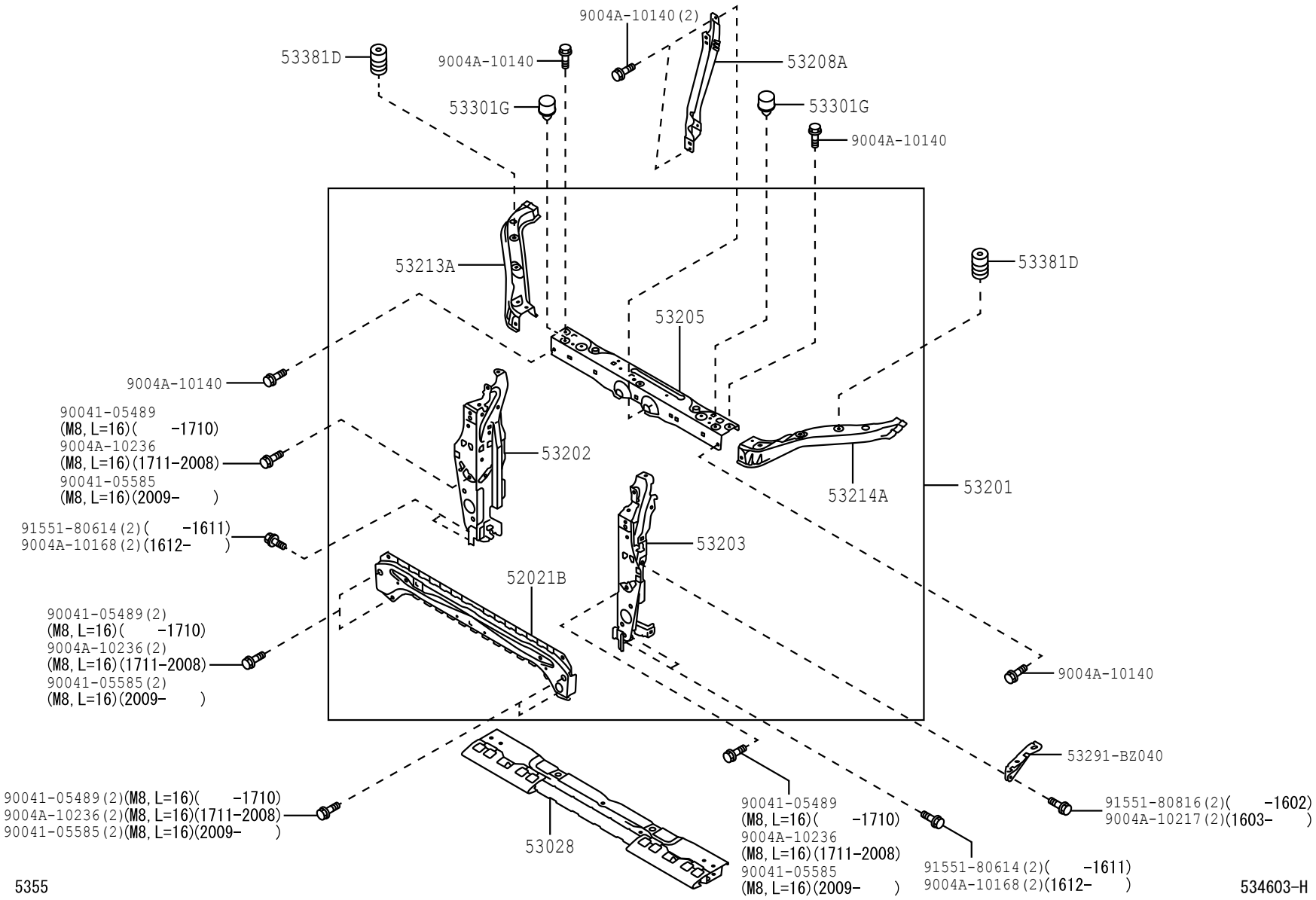

5355

534603-H

PROD_DATE	MODELS	SPEC CODE	DESCRIPTION	R/P	PART NUMBER	QYT	REV_REF FR	REV_REF TO
	52021B		REINFORCEMENT SUB-ASSY, FRONT BUMPER					
1507 - 1607	F650				52021-BZ220-	1		
1507 - 1901	F653				52021-BZ220-	1		
1901 -	F65#				52021-BZ220-	1		
	52145D		BRACKET, FRONT BUMPER SIDE MOUNTING, RH					
1111 - 1507	F65#				52147-BZ110-	1		
	52146D		BRACKET, FRONT BUMPER SIDE MOUNTING, LH					
1111 - 1507	F65#				52147-BZ110-	1		
	53028		SUPPORT SUB-ASSY, RADIATOR, LOWER					
1507 - 1607	F650				53028-BZ140-	1		
1507 - 1901	F653				53028-BZ140-	1		
1901 -	F65#				53028-BZ140-	1		
	53201		SUPPORT SUB-ASSY, RADIATOR					
1111 - 1507	F65#..5F				53201-BZ070-	1		
1111 - 1507	F651..E4AT				53201-BZ240-	1		
1507 - 1607	F650				53201-BZ290-	1		
1507 - 1901	F653				53201-BZ290-	1		
1901 -	F65#				53201-BZ340-	1		
	53202		SUPPORT SUB-ASSY, RADIATOR, RH					
1111 - 1507	F65#				53202-BZ090-	1		
1507 - 1607	F650				53202-BZ100-	1		
1507 - 1801	F653				53202-BZ100-	1		
1802 - 1901	F653				53202-BZ101-	1		
1901 -	F65#				53202-BZ101-	1		

FIG.53-55 FRONT FENDER APRON & DASH PANEL

PROD_DATE	MODELS	SPEC CODE	DESCRIPTION	R/P	PART NUMBER	QYT	REV_REF FR	REV_REF TO
	53203		SUPPORT SUB-ASSY, RADIATOR, LH					
1111 - 1507	F65#				53203-BZ150-	1		
1507 - 1607	F650				53203-BZ170-	1		
1507 - 1901	F653				53203-BZ170-	1		
1901 -	F65#				53203-BZ170-	1		
	53205		SUPPORT SUB-ASSY, RADIATOR, UPPER					
1111 - 1403	F65#				53205-BZ150-	1		
1404 - 1507	F65#				53205-BZ151-	1		
1507 - 1607	F650				53205-BZ160-	1		
1507 - 1901	F653				53205-BZ160-	1		
1901 -	F65#				53205-BZ180-	1		
	53208A		SUPPORT SUB-ASSY, HOOD LOCK					
1111 - 1507	F65#				53208-BZ050-	1		
1507 - 1607	F650				53208-BZ110-	1		
1507 - 1901	F653				53208-BZ110-	1		
1901 -	F65#				53208-BZ100-	1		
	53213A		SUPPORT, RADIATOR, UPPER RH					
1507 - 1607	F650				53213-BZ120-	1		
1507 - 1901	F653				53213-BZ120-	1		
1901 -	F65#				53213-BZ120-	1		
	53214A		SUPPORT, RADIATOR, UPPER LH					
1507 - 1607	F650				53214-BZ080-	1		
1507 - 1901	F653				53214-BZ080-	1		
1901 -	F65#				53214-BZ080-	1		

PROD_DATE	MODELS	SPEC CODE	DESCRIPTION	R/P	PART NUMBER	QYT	REV_REF FR	REV_REF TO
	+----------+							
	| 53261B | BRACKET, RADIATOR RESERVE TANK MOUNTING							
	+----------+							
1111 - 1507	F65#				53261-87Z02-	1		
	+----------+							
	| 53301G | CUSHION, HOOD BUMPER							
	+----------+							
1111 - 1507	F65#				9004A-54028-	2		
				#	(90045-41152-)	1		
1507 - 1607	F650				9004A-54015-	2		
				#	(90045-41263-)	1		
1507 - 1901	F653				9004A-54015-	2		
				#	(90045-41263-)	1		
1901 -	F65#				9004A-54015-	2		
				#	(90045-41263-)	1		
	+----------+							
	| 53381D | BUMPER, HOOD TO FRONT SHROUD							
	+----------+							
1111 - 1507	F65#				53381-BZ010-	2		
				#	(53381-97205-)	1		
1507 - 1607	F650				53381-BZ010-	2		
				#	(53381-97205-)	1		
1507 - 1901	F653				53381-BZ010-	2		
				#	(53381-97205-)	1		
1901 -	F65#				53381-BZ010-	2		
				#	(53381-97205-)	1		
	+----------+							
	| 53701 | APRON SUB-ASSY, FRONT FENDER, RH							
	+----------+							
1111 - 1507	F65#				53701-BZ470-	1		
1507 - 1607	F650				53701-BZ380-	1		
1507 - 1901	F653				53701-BZ380-	1		
1901 -	F65#				53701-BZ380-	1		
	+----------+							
	| 53702 | APRON SUB-ASSY, FRONT FENDER, LH							
	+----------+							
1111 - 1507	F65#		W/WELD NUT		53702-BZ070-	1		
1507 - 1607	F650		W/WELD NUT		53702-BZ200-	1		
1507 - 1901	F653		W/WELD NUT		53702-BZ200-	1		

FIG.53-55 FRONT FENDER APRON & DASH PANEL

PROD_DATE	MODELS	SPEC CODE	DESCRIPTION	R/P	PART NUMBER	QYT	REV_REF FR	REV_REF TO
	+----------+							
	| 53702 | APRON SUB-ASSY, FRONT FENDER, LH							
	CONTINUED--+							
1901 -	F65#		W/WELD NUT		53702-BZ200-	1		
	+----------+							
	| 53711B | APRON, FRONT FENDER, FRONT RH							
	+----------+							
1111 - 1507	F65#				53711-BZ120-	1		
1507 - 1607	F650				53711-BZ160-	1		
1507 - 1901	F653				53711-BZ160-	1		
1901 -	F65#				53711-BZ160-	1		
	+----------+							
	| 53712B | APRON, FRONT FENDER, FRONT LH							
	+----------+							
1111 - 1507	F65#				53712-BZ010-	1		
1507 - 1607	F650				53712-BZ170-	1		
1507 - 1901	F653				53712-BZ170-	1		
1901 -	F65#				53712-BZ170-	1		
	+----------+							
	| 53714E | APRON, FRONT FENDER, REAR LH							
	+----------+							
1111 - 1507	F65#		NO.1		53714-BZ010-	1		
1111 - 1507	F65#		NO.2		53718-BZ070-	1		
1507 - 1607	F650		NO.1		53714-BZ010-	1		
1507 - 1607	F650		NO.2		53718-BZ100-	1		
1507 - 1612	F653		NO.2		53718-BZ100-	1		
1507 - 1901	F653		NO.1		53714-BZ010-	1		
1701 - 1901	F653		NO.2		53718-BZ101-	1		
1901 -	F65#		NO.1		53714-BZ010-	1		
1901 -	F65#		NO.2		53718-BZ101-	1		
	+----------+							
	| 53715D | APRON, FENDER SIDE, RH							
	+----------+							
1111 - 1507	F65#		NO.1		53713-BZ010-	1		
1111 - 1507	F65#		NO.2		53717-BZ090-	1		

PROD_DATE	MODELS	SPEC CODE	DESCRIPTION	R/P	PART NUMBER	QYT	REV_REF FR	REV_REF TO
	+----------+							
	| 53715D | APRON, FENDER SIDE, RH							
	CONTINUED--+							
1507 - 1607	F650		NO.1		53713-BZ010-	1		
1507 - 1607	F650		NO.2		53717-BZ100-	1		
1507 - 1901	F653		NO.1		53713-BZ010-	1		
1507 - 1901	F653		NO.2		53717-BZ100-	1		
1901 -	F65#		NO.1		53713-BZ010-	1		
1901 -	F65#		NO.2		53717-BZ100-	1		
	+----------+							
	| 53725F | APRON, FRONT FENDER NO.2 SIDE, RH							
	+----------+							
1111 - 1507	F65#				53725-BZ010-	1		
1507 - 1607	F650				53725-BZ020-	1		
1507 - 1901	F653				53725-BZ020-	1		
1901 -	F65#				53725-BZ020-	1		
	+----------+							
	| 53726C | APRON, FRONT FENDER NO.2 SIDE, LH							
	+----------+							
1111 - 1507	F65#				53726-BZ010-	1		
1507 - 1607	F650				53726-BZ020-	1		
1507 - 1901	F653				53726-BZ020-	1		
1901 -	F65#				53726-BZ020-	1		
	+----------+							
	| 53733D | MEMBER, FRONT APRON TO COWL SIDE, LOWER FRONT RH							
	+----------+							
1111 - 1507	F65#				53733-BZ010-	1		
1507 - 1607	F650				53733-BZ070-	1		
1507 - 1901	F653				53733-BZ070-	1		
1901 -	F65#				53733-BZ070-	1		
	+----------+							
	| 53734C | MEMBER, FRONT APRON TO COWL SIDE, LOWER FRONT LH							
	+----------+							
1111 - 1507	F65#				53734-BZ010-	1		
1507 - 1607	F650				53734-BZ070-	1		

FIG.53-55 FRONT FENDER APRON & DASH PANEL

PROD_DATE	MODELS	SPEC CODE	DESCRIPTION	R/P	PART NUMBER	QYT	REV_REF FR	REV_REF TO
	+----------+							
	| 53734C | MEMBER, FRONT APRON TO COWL SIDE, LOWER FRONT LH							
	CONTINUED--+							
1507 - 1901	F653				53734-BZ070-	1		
1901 -	F65#				53734-BZ070-	1		
	+----------+							
	| 53735A | MEMBER, FRONT APRON TO COWL SIDE, LOWER R							
	+----------+ H							
1111 - 1304	F65#				53735-BZ040-	1		
1305 - 1507	F65#				53735-BZ060-	1		
1507 - 1607	F650				57023-BZ020-	1		
1507 - 1901	F653				57023-BZ020-	1		
1901 -	F65#				57023-BZ020-	1		
	+----------+							
	| 53736C | MEMBER, FRONT APRON TO COWL SIDE, LOWER L							
	+----------+ H							
1111 - 1304	F65#				53736-BZ050-	1		
1305 - 1507	F65#				53736-BZ090-	1		
1507 - 1607	F650				57024-BZ010-	1		
1507 - 1901	F653				57024-BZ010-	1		
1901 -	F65#				57024-BZ010-	1		
	+----------+							
	| 53737G | PLATE, FRONT APRON TO COWL SIDE MEMBER, R							
	+----------+ H							
1111 - 1507	F65#				53737-BZ060-	1		
1507 - 1607	F650				53737-BZ080-	1		
1507 - 1901	F653				53737-BZ080-	1		
1901 -	F65#				53737-BZ080-	1		
	+----------+							
	| 53738 | PLATE, FRONT APRON TO COWL SIDE MEMBER, L							
	+----------+ H							
1111 - 1507	F65#				53738-BZ060-	1		
1507 - 1607	F650				53738-BZ080-	1		
1507 - 1901	F653				53738-BZ080-	1		
1901 -	F65#				53738-BZ080-	1		

PROD_DATE	MODELS	SPEC CODE	DESCRIPTION	R/P	PART NUMBER	QYT	REV_REF FR	REV_REF TO
	+----------+							
	| 53751B | BRACKET, CHARCOAL CANISTER MOUNTING							
	+----------+							
1507 - 1607	F650				53751-BZ140-	1		
1507 - 1901	F653				53751-BZ140-	1		
1901 -	F65#				53751-BZ140-	1		
	+----------+							
	| 53771B | SUPPORT, BATTERY CARRIER, RH							
	+----------+							
1111 - 1507	F65#				53771-BZ030-	1		
1507 - 1607	F650				53703-BZ080-	1		
1507 - 1901	F653				53703-BZ080-	1		
1901 -	F65#				53703-BZ080-	1		
	+----------+							
	| 53785A | GUSSET, FRONT FENDER APRON, UPPER RH							
	+----------+							
1507 - 1607	F650				53785-BZ010-	1		
1507 - 1901	F653				53785-BZ010-	1		
1901 -	F65#				53785-BZ010-	1		
	+----------+							
	| 53786B | GUSSET, FRONT FENDER APRON, UPPER LH							
	+----------+							
1507 - 1607	F650				53785-BZ010-	1		
1507 - 1901	F653				53785-BZ010-	1		
1901 -	F65#				53785-BZ010-	1		
	+----------+							
	| 55101 | PANEL SUB-ASSY, DASH							
	+----------+							
1111 - 1305	F650				55101-BZ710-	1		
1111 - 1305	F651..5F				55101-BZC30-	1		
1111 - 1305	F651..E4AT				55101-BZC50-	1		
1305 - 1507	F650				55101-BZ711-	1		
1305 - 1507	F651..5F				55101-BZC31-	1		
1305 - 1507	F651..E4AT				55101-BZC51-	1		
1507 - 1607	F650				55101-BZF00-	1		

FIG.53-55 FRONT FENDER APRON & DASH PANEL

PROD_DATE	MODELS	SPEC CODE	DESCRIPTION	R/P	PART NUMBER	QYT	REV_REF FR	REV_REF TO
	+----------+							
	| 55101 | PANEL SUB-ASSY, DASH							
	CONTINUED--+							
1507 - 1901	F653..5F				55101-BZF10-	1		
1507 - 1901	F653..E4AT				55101-BZL20-	1		
1901 -	F653..5F				55101-BZF10-	1		
1901 -	F654..5F				55101-BZF20-	1		
1901 -	F65#..E4AT				55101-BZL20-	1		
	+----------+							
	| 55129 | COVER, DASH PANEL HOLE							
	+----------+							
1507 - 1607	F650..STD				58136-BZ010-	1		
	+----------+							
	| 55168A | BRACKET, FRONT FENDER MOUNTING, RH							
	+----------+							
1111 - 1507	F65#				55168-BZ040-	1		
1507 - 1607	F650				55168-BZ150-	1		
1507 - 1609	F653				55168-BZ150-	1		
1610 - 1901	F653				55168-BZ151-	1		
1901 -	F65#				55168-BZ151-	1		
	+----------+							
	| 55169B | BRACKET, FRONT FENDER MOUNTING, LH							
	+----------+							
1111 - 1507	F65#				55168-BZ040-	1		
1507 - 1607	F650				55169-BZ120-	1		
1507 - 1901	F653				55169-BZ120-	1		
1901 -	F65#				55169-BZ120-	1		
	+----------+							
	| 55184A | BRACKET, DASH PANEL							
	+----------+							
1111 - 1507	F65#				55184-BZ010-	1		
	+----------+							
	| 55210 | INSULATOR ASSY, DASH PANEL							
	+----------+							
1111 - 1205	F65#				55210-BZ270-	1		
1205 - 1507	F65#				55210-BZ271-	1		

PROD_DATE	MODELS	SPEC CODE	DESCRIPTION	R/P	PART NUMBER	QYT	REV_REF FR	REV_REF TO
	+----------+							
	| 55210 | INSULATOR ASSY, DASH PANEL							
	CONTINUED--+							
1507 - 1607	F650				55210-BZ440-	1		
1507 - 1901	F653..LO				55210-BZ440-	1		
1507 - 1901	F653..STD				55210-BZ450-	1		
1901 -	F65#				55210-BZ561-	1		
	+----------+							
	| 55210A | CLIP							
	+----------+							
1111 - 1205	F65#				9004A-46130-	8		
1205 - 1507	F65#				9004A-46130-	10		
1507 - 1607	F650				90467-11122-	9		
1507 - 1901	F653				90467-11122-	9		
1901 -	F65#				90467-11122-	9		
	+----------+							
	| 55210C | CLIP							
	+----------+							
1111 - 1507	F65#		DK.GRAY		9004A-46131-B0	3		
	+----------+							
	| 55218D | SEAL, DASH PANEL							
	+----------+							
1507 - 1607	F650				55259-BZ010-	2		
1507 - 1901	F653				55259-BZ010-	2		
1901 -	F65#				55259-BZ010-	2		
	+----------+							
	| 55223A | INSULATOR, DASH PANEL, OUTER							
	+----------+							
1111 - 1507	F65#				55223-BZ100-	1		
1507 - 1607	F650				55223-BZ130-	1		
1507 - 1901	F653				55223-BZ130-	1		
1901 -	F65#				55223-BZ130-	1		
	+----------+							
	| 55787D | INSULATOR, COWL TOP PANEL, NO.1							
	+----------+							
1507 - 1607	F650				55787-BZ010-	1		

FIG.53-55 FRONT FENDER APRON & DASH PANEL

PROD_DATE	MODELS	SPEC CODE	DESCRIPTION	R/P	PART NUMBER	QYT	REV_REF FR	REV_REF TO
	+----------+							
	| 55787D | INSULATOR, COWL TOP PANEL, NO.1							
	CONTINUED--+							
1507 - 1901	F653				55787-BZ010-	1		
1901 -	F65#				55787-BZ010-	1		
	+----------+							
	| 57104D | MEMBER SUB-ASSY, FRONT CROSS							
	+----------+							
1111 - 1507	F65#..5F				57104-BZ140-	1		
1111 - 1507	F651..E4AT				57104-BZ160-	1		

(1111-1507)

ILLUST NO. 2 OF 2

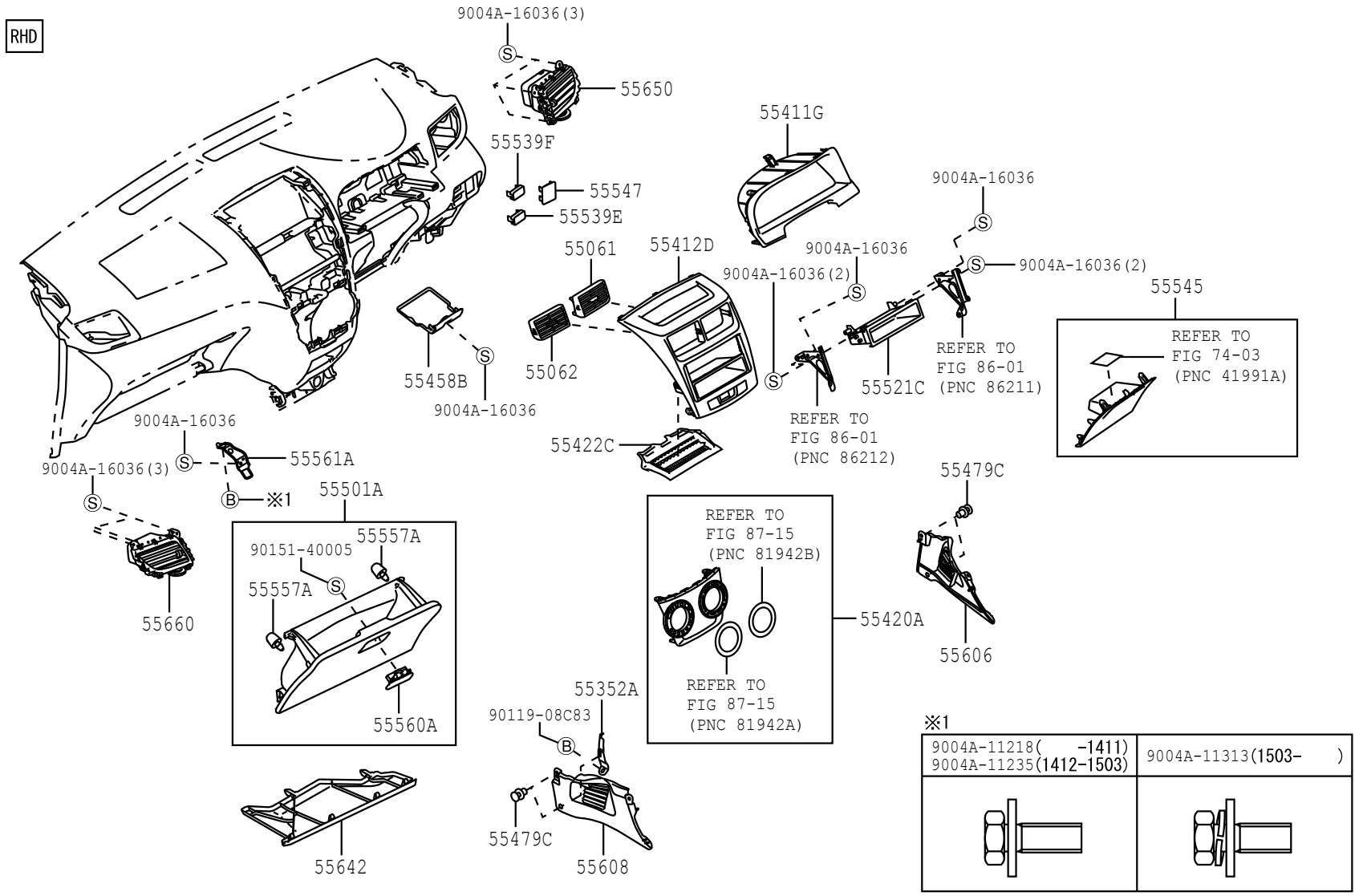

552799-D

FIG.55-51 INSTRUMENT PANEL & GLOVE COMPARTMENT

(1111-1305)

ILLUST NO. 1 OF 2

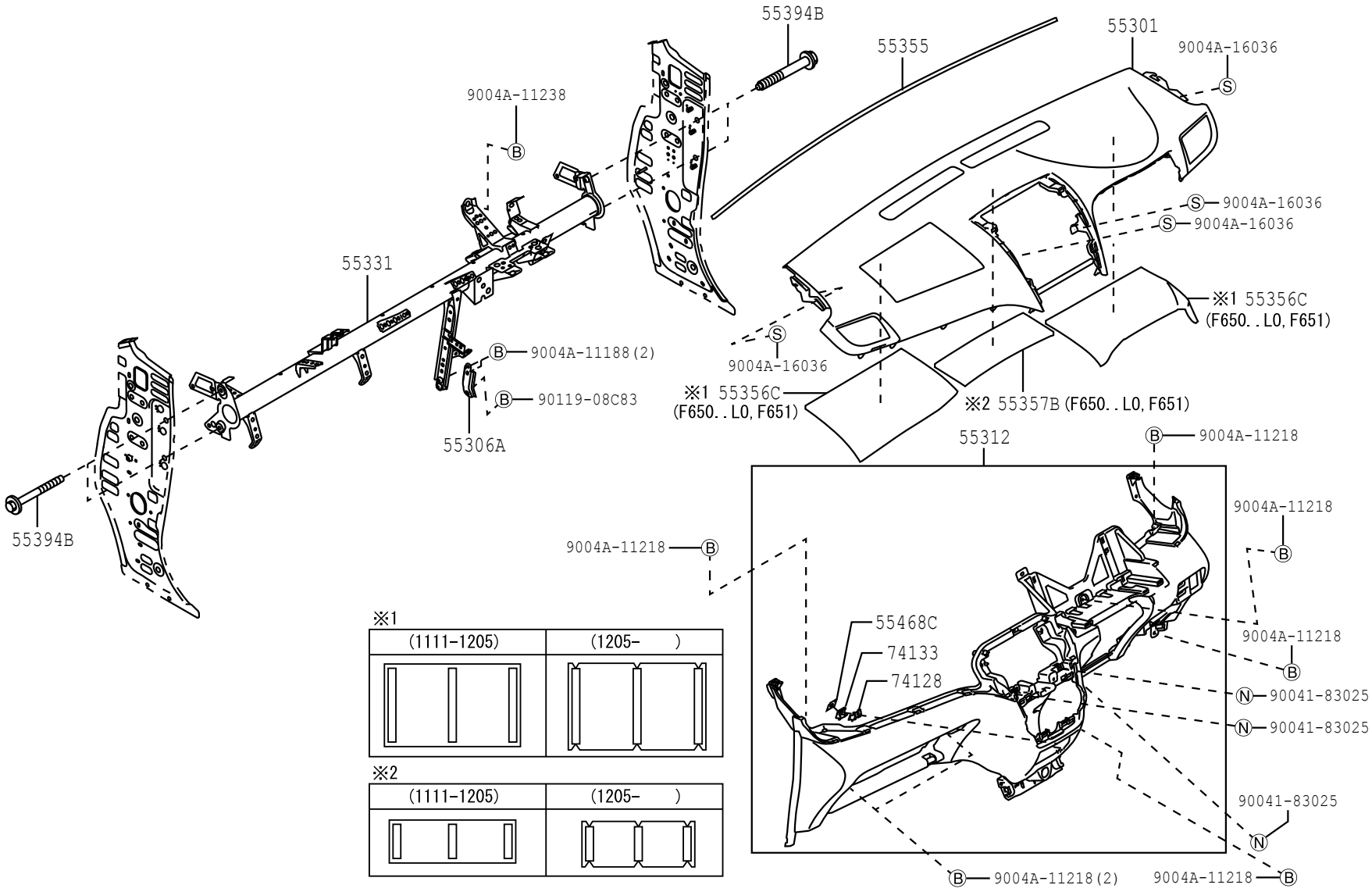

5551

552800-K

FIG.55-51 INSTRUMENT PANEL & GLOVE COMPARTMENT

(1305-1507)

ILLUST NO. 1 OF 2

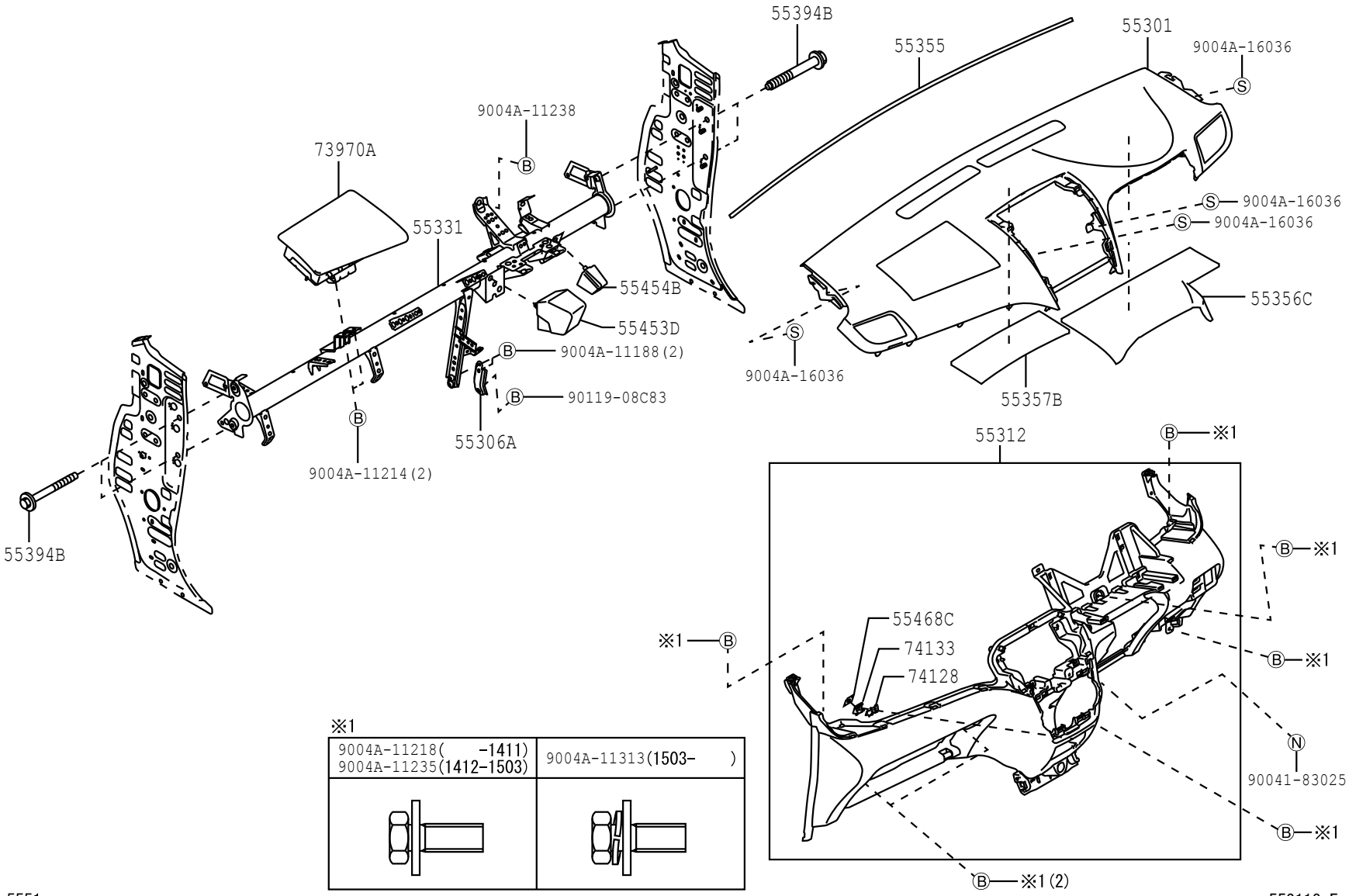

※1

9004A-11218(-1411) 9004A-11235(1412-1503)	9004A-11313(1503-)

5551

553118-E

FIG.55-51 INSTRUMENT PANEL & GLOVE COMPARTMENT

(1507-1901)

ILLUST NO. 1 OF 2

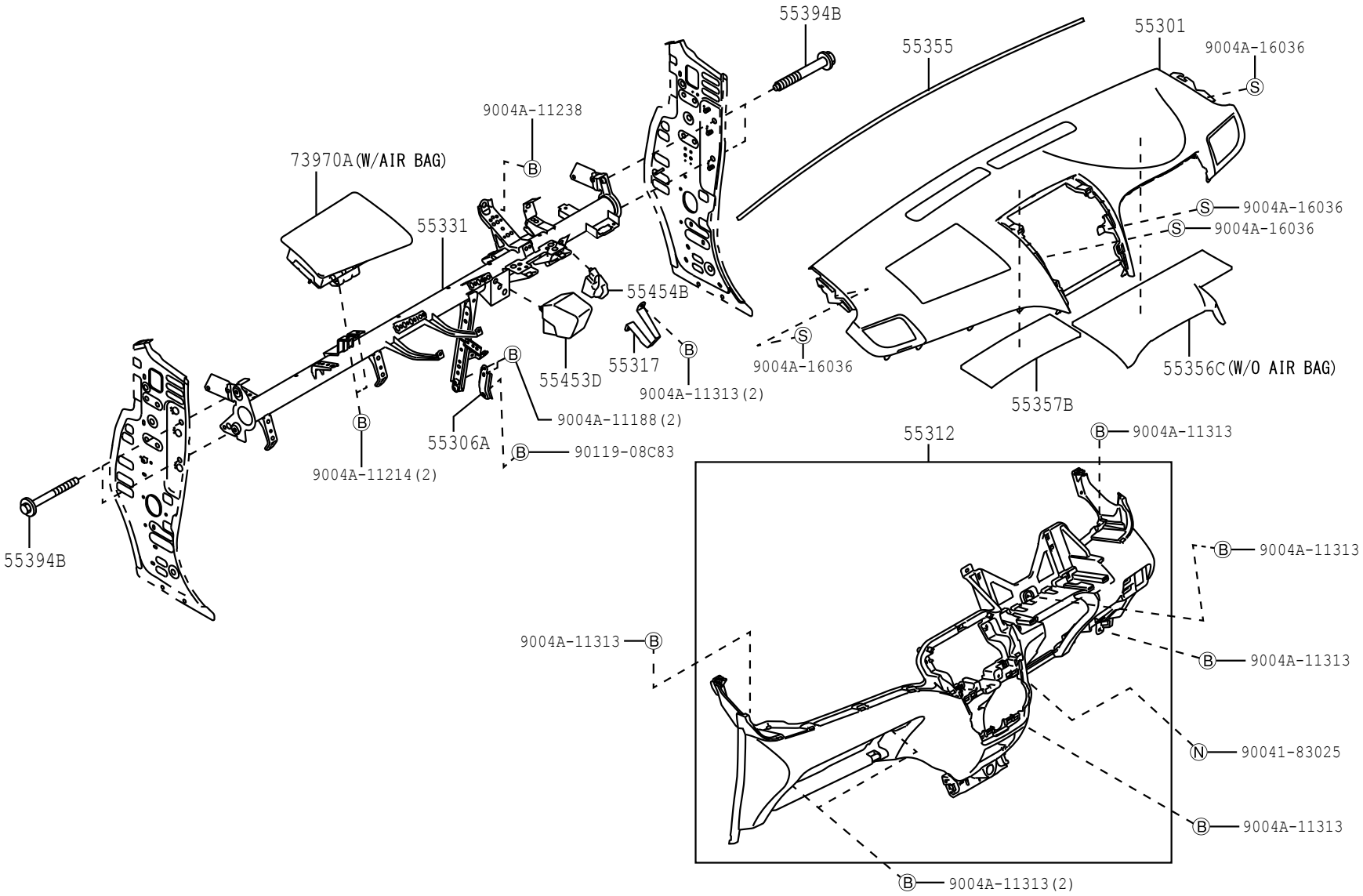

5551

553517-A

FIG.55-51 INSTRUMENT PANEL & GLOVE COMPARTMENT

(1507-1901)

ILLUST NO. 2 OF 2

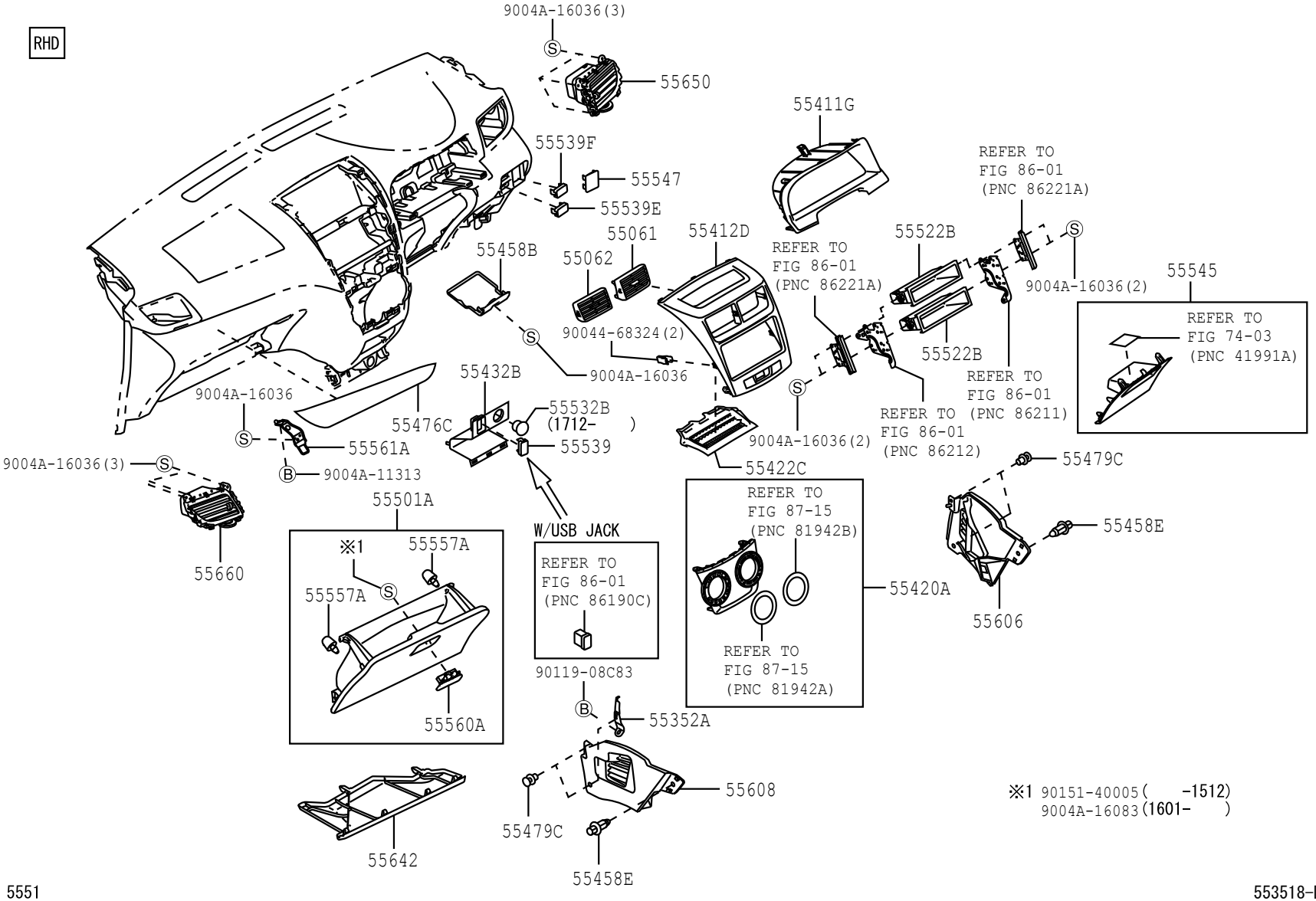

5551

553518-D

FIG.55-51 INSTRUMENT PANEL & GLOVE COMPARTMENT

(1901-)

ILLUST NO. 1 OF 2

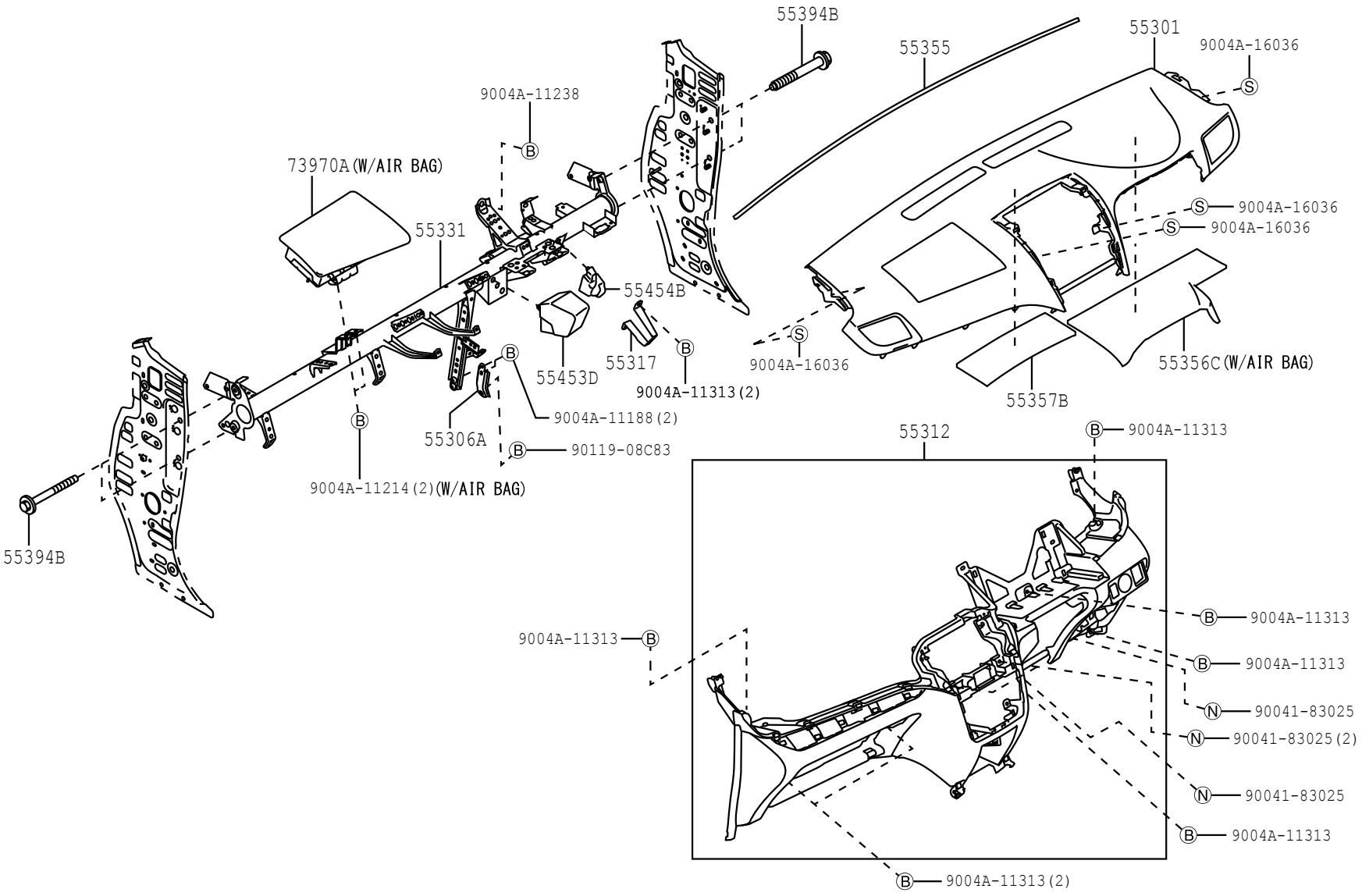

5551

554317-C

FIG.55-51 INSTRUMENT PANEL & GLOVE COMPARTMENT

(1901-)

ILLUST NO. 2 OF 2

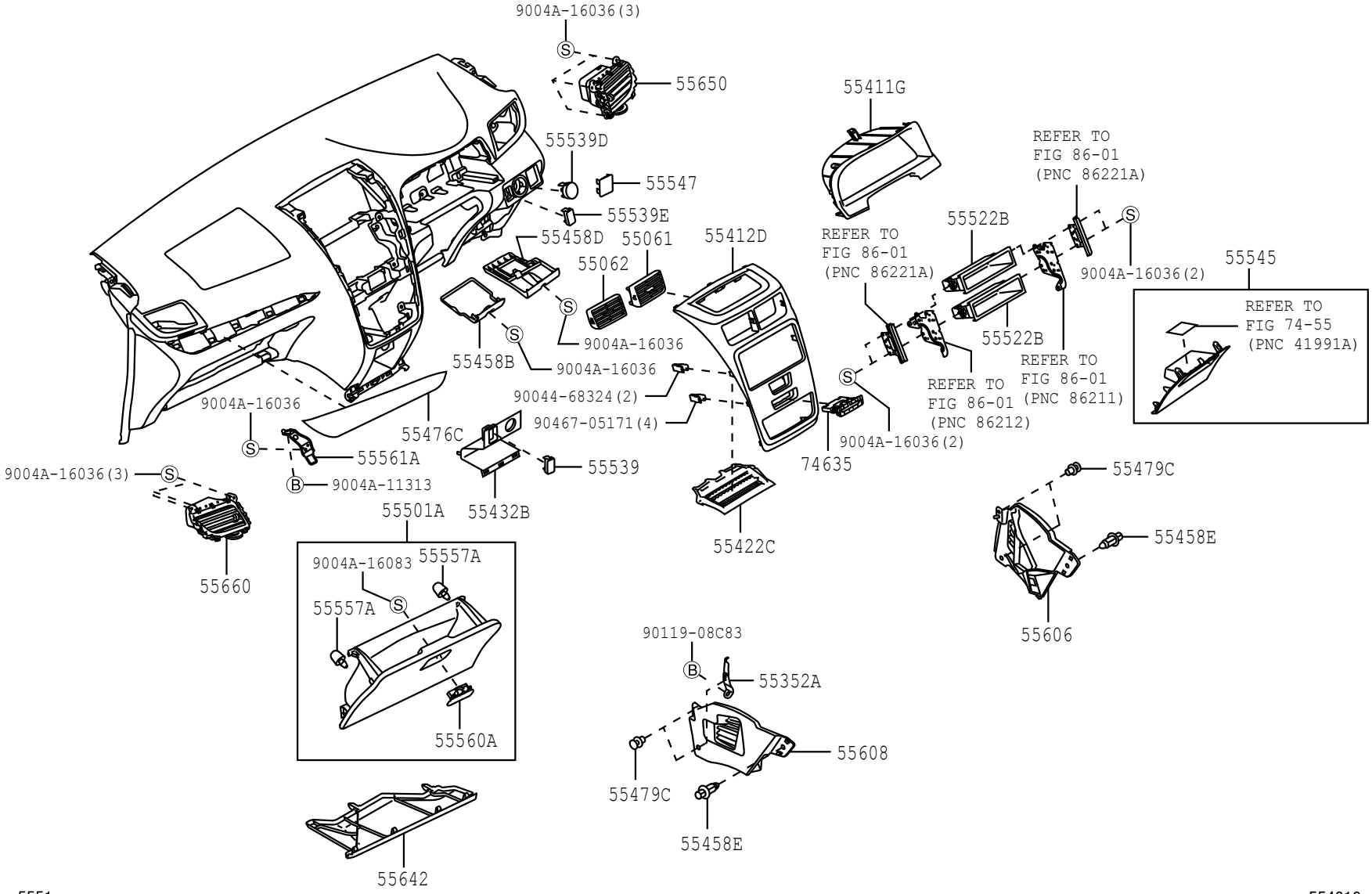

5551

554318

PROD_DATE	MODELS	SPEC CODE	DESCRIPTION	R/P	PART NUMBER	QYT	REV_REF FR	REV_REF TO
	+----------+							
	| 55061 | REGISTER SUB-ASSY, INSTRUMENT PANEL, NO.1							
	+----------+							
1111 - 1305	F651..STD		-(TRIM4#)		55061-BZ220-C1	1		
1111 - 1507	F65#..LO		BLACK(TRIM4#)		55061-BZ210-C0	1		
1111 - 1507	F650..STD		-(TRIM1#)		55061-BZ220-C1	1		
1305 - 1507	F651..STD		BLACK(TRIM4#)		55061-BZ210-C0	1		
1507 - 1607	F650..STD		-(TRIM1#)		55061-BZ220-C1	1		
1507 - 1901	F653		BLACK(TRIM4#)		55061-BZ210-C0	1		
1507 - 1901	F650..LO		BLACK(TRIM4#)		55061-BZ210-C0	1		
1610 - 1901	F653..LO..5F	B2AE	INDONESIA TAXI,-(TRIM4#)		55061-BZ220-C1	1		
1901 -	F65#		BLACK(TRIM4#)		55061-BZ210-C0	1		
1901 -	F653..LO..5F	B2AE	INDONESIA TAXI,-(TRIM4#)		55061-BZ220-C1	1		
	+----------+							
	| 55062 | REGISTER SUB-ASSY, INSTRUMENT PANEL, NO.2							
	+----------+							
1111 - 1305	F651..STD		-(TRIM4#)		55062-BZ060-C1	1		
1111 - 1507	F65#..LO		BLACK(TRIM4#)		55062-BZ040-C0	1		
1111 - 1507	F650..STD		-(TRIM1#)		55062-BZ060-C1	1		
1305 - 1507	F651..STD		BLACK(TRIM4#)		55062-BZ040-C0	1		
1507 - 1607	F650..STD		-(TRIM1#)		55062-BZ060-C1	1		
1507 - 1901	F653		BLACK(TRIM4#)		55062-BZ040-C0	1		
1507 - 1901	F650..LO		BLACK(TRIM4#)		55062-BZ040-C0	1		
1610 - 1901	F653..LO..5F	B2AE	INDONESIA TAXI,-(TRIM4#)		55062-BZ060-C1	1		
1901 -	F65#		BLACK(TRIM4#)		55062-BZ040-C0	1		
1901 -	F653..LO..5F	B2AE	INDONESIA TAXI,-(TRIM4#)		55062-BZ060-C1	1		
	+----------+							
	| 55301 | PANEL SUB-ASSY, INSTRUMENT							
	+----------+							
1111 - 1305	F650..STD		DK.GRAY(TRIM1#)		55311-BZ330-B0	1		

FIG.55-51 INSTRUMENT PANEL & GLOVE COMPARTMENT

PROD_DATE	MODELS	SPEC CODE	DESCRIPTION	R/P	PART NUMBER	QYT	REV_REF FR	REV_REF TO
	+----------+							
	| 55301 | PANEL SUB-ASSY, INSTRUMENT							
	CONTINUED--+							
1111 - 1305	F651		DK.GRAY(TRIM4#)		55311-BZ330-B0	1		
1111 - 1305	F650..LO		DK.GRAY(TRIM4#)		55311-BZ330-B0	1		
1305 - 1507	F650..STD		DK.GRAY(TRIM1#)		55311-BZ350-B0	1		
1305 - 1507	F651		DK.GRAY(TRIM4#)		55311-BZ350-B0	1		
1305 - 1507	F650..LO		DK.GRAY(TRIM4#)		55311-BZ350-B0	1		
1507 - 1607	F650..STD		DK.GRAY(TRIM1#)		55311-BZ350-B0	1		
1507 - 1808	F653		DK.GRAY(TRIM4#)		55311-BZ350-B0	1		
1507 - 1808	F650..LO		DK.GRAY(TRIM4#)		55311-BZ350-B0	1		
1809 - 1901	F653		DK.GRAY(TRIM4#)		55311-BZ351-B0	1		
1901 -	F65#		DK.GRAY(TRIM4#)		55311-BZ351-B0	1		
	+----------+							
	| 55306A | BRACE SUB-ASSY, INSTRUMENT PANEL, NO.1							
	+----------+							
1111 - 1507	F65#				55306-BZ110-	1		
1507 - 1607	F650				55306-BZ110-	1		
1507 - 1901	F653				55306-BZ110-	1		
1901 -	F65#				55306-BZ110-	1		
	+----------+							
	| 55312 | PANEL, INSTRUMENT, LOWER							
	+----------+							
1111 - 1507	F650..STD		MD.GRAY(TRIM1#)		55312-BZ020-B1	1		
1111 - 1507	F651		-(TRIM4#)		55312-BZ020-E0	1		
1111 - 1507	F650..LO		-(TRIM4#)		55312-BZ020-E0	1		
1507 - 1607	F650..STD		DK.GRAY(TRIM1#)		55312-BZ080-B0	1		
1507 - 1608	F653		OAK(TRIM4#)		55312-BZ080-E0	1		
1507 - 1608	F650..LO		OAK(TRIM4#)		55312-BZ080-E0	1		
1609 - 1901	F653		OAK(TRIM4#)		55312-BZ081-E0	1		
1901 - 2002	F65#		LINEN BEIGE(TRIM4#)		55312-BZ100-E0	1		
2003 -	F65#		LINEN BEIGE(TRIM4#)		55312-BZ101-E0	1		

PROD_DATE	MODELS	SPEC CODE	DESCRIPTION	R/P	PART NUMBER	QYT	REV_REF FR	REV_REF TO
	+----------+							
	| 55317 | PATCH, INSTRUMENT PANEL							
	+----------+							
1507 - 1607	F650				55315-BZ110-	1		
1507 - 1901	F653				55315-BZ110-	1		
1901 -	F65#				55315-BZ110-	1		
	+----------+							
	| 55331 | REINFORCEMENT, INSTRUMENT PANEL							
	+----------+							
1111 - 1305	F65#				55305-BZ340-	1		
1304 - 1305	F65#	R5AC	WITH SRS AIR BAG(D+P)		55305-BZ400-	1		
1305 - 1507	F65#				55305-BZ401-	1		
1507 - 1607	F650				55305-BZ480-	1		
1507 - 1901	F653				55305-BZ480-	1		
1901 -	F65#				55305-BZ600-	1		
	+----------+							
	| 55352A | BRACE, INSTRUMENT PANEL TO FLOOR, NO.2							
	+----------+							
1111 - 1507	F65#				55352-BZ040-	1		
1507 - 1901	F65#				55352-BZ040-	1		
1901 -	F65#				55352-BZ040-	1		
	+----------+							
	| 55355 | CUSHION, INSTRUMENT PANEL, NO.1							
	+----------+							
1111 - 1507	F65#				55355-BZ100-	1		
1507 - 1607	F650				55355-BZ100-	1		
1507 - 1901	F653				55355-BZ100-	1		
1901 - 2007	F65#				55355-BZ100-	1		
2008 -	F65#				55349-BZ140-	1		
	+----------+							
	| 55356C | CUSHION, INSTRUMENT PANEL, NO.2							
	+----------+							
1111 - 1205	F651				55356-BZ120-	2		
1111 - 1205	F650..LO				55356-BZ120-	2		

FIG.55-51 INSTRUMENT PANEL & GLOVE COMPARTMENT

PROD_DATE	MODELS	SPEC CODE	DESCRIPTION	R/P	PART NUMBER	QYT	REV_REF FR	REV_REF TO
	+----------+							
	| 55356C | CUSHION, INSTRUMENT PANEL, NO.2							
	CONTINUED--+							
1205 - 1212	F651				55356-BZ121-	2		
1205 - 1212	F650..LO				55356-BZ121-	2		
1301 - 1305	F651				55356-BZ122-	2		
1301 - 1305	F650..LO				55356-BZ122-	2		
1305 - 1507	F65#				55356-BZ130-	1		
1507 - 1901	F653				55356-BZ130-	1		
1901 -	F65#				55356-BZ130-	1		
	+----------+							
	| 55357B | CUSHION, INSTRUMENT PANEL, NO.3							
	+----------+							
1111 - 1205	F651				55357-BZ070-	1		
1111 - 1205	F650..LO				55357-BZ070-	1		
1205 - 1212	F651				55357-BZ071-	1		
1205 - 1212	F650..LO				55357-BZ071-	1		
1301 - 1507	F651				55357-BZ072-	1		
1301 - 1507	F650..LO				55357-BZ072-	1		
1305 - 1507	F650..STD				55357-BZ072-	1		
1507 - 1901	F653				55357-BZ072-	1		
1901 -	F65#				55357-BZ072-	1		
	+----------+							
	| 55394B | BOLT, INSTRUMENT PANEL							
	+----------+							
1111 - 1507	F65#				55394-BZ020-	4		
1507 - 1607	F650				55394-BZ020-	4		
1507 - 1901	F653				55394-BZ020-	4		
1901 -	F65#				55394-BZ020-	4		
	+----------+							
	| 55411G | PANEL, INSTRUMENT CLUSTER FINISH, NO.1							
	+----------+							
1111 - 1507	F650..STD		BLACK(TRIM1#)		55411-BZ150-C0	1		

PROD_DATE	MODELS	SPEC CODE	DESCRIPTION	R/P	PART NUMBER	QYT	REV_REF FR	REV_REF TO
	+----------+							
	| 55411G | PANEL, INSTRUMENT CLUSTER FINISH, NO.1							
	CONTINUED--+							
1111 - 1507	F651		BLACK(TRIM4#)		55411-BZ150-C0	1		
1111 - 1507	F650..LO		BLACK(TRIM4#)		55411-BZ150-C0	1		
1507 - 1607	F650..STD		BLACK(TRIM1#)		55411-BZ220-C0	1		
1507 - 1901	F653		BLACK(TRIM4#)		55411-BZ220-C0	1		
1507 - 1901	F650..LO		BLACK(TRIM4#)		55411-BZ220-C0	1		
1901 -	F65#		BLACK(TRIM4#)		55411-BZ220-C0	1		
	+----------+							
	| 55412D | PANEL, INSTRUMENT CLUSTER FINISH, CENTER							
	+----------+							
1111 - 1305	F651		BLACK(TRIM4#)		55412-BZ470-C0	1		
1111 - 1305	F650..LO		BLACK(TRIM4#)		55412-BZ470-C0	1		
1111 - 1507	F650..STD		BLACK(TRIM1#)		55412-BZ470-C0	1		
1305 - 1507	F651		SILVER(TRIM4#)		55412-BZ680-C0	1		
1305 - 1507	F650..LO		SILVER(TRIM4#)		55412-BZ680-C0	1		
1507 - 1607	F650..STD		BLACK(TRIM1#)		55412-BZ700-C0	1		
1507 - 1607	F650..LO		BLACK(TRIM4#)		55412-BZ700-C0	1		
1507 - 1901	F653		SILVER(TRIM4#)		55412-BZ840-B0	1		
1901 -	F65#		BLACK METALLIC(TRIM4#)		55412-BZB10-C0	1		
	+----------+							
	| 55420A | PANEL ASSY, INSTRUMENT CLUSTER FINISH, CENTER							
	+----------+							
1111 - 1305	F651		BLACK(TRIM4#)		55420-BZ050-C0	1		
1111 - 1305	F650..LO		BLACK(TRIM4#)		55420-BZ050-C0	1		
1111 - 1507	F650..STD		BLACK(TRIM1#)		55420-BZ050-C0	1		
1305 - 1507	F651		SILVER(TRIM4#)		55420-BZ150-B0	1		
1305 - 1507	F650..LO		SILVER(TRIM4#)		55420-BZ150-B0	1		
1507 - 1607	F650..STD		BLACK(TRIM1#)		55420-BZ100-C1	1		
1507 - 1607	F650..LO		BLACK(TRIM4#)		55420-BZ100-C1	1		

FIG.55-51 INSTRUMENT PANEL & GLOVE COMPARTMENT

PROD_DATE	MODELS	SPEC CODE	DESCRIPTION	R/P	PART NUMBER	QYT	REV_REF FR	REV_REF TO
	+----------+							
	| 55420A | PANEL ASSY, INSTRUMENT CLUSTER FINISH, CENTER							
	CONTINUED--+							
1507 - 1901	F653..LO		SILVER(TRIM4#)		55420-BZ160-B1	1		
1507 - 1901	F653..STD		SILVER(TRIM4#)		55420-BZ180-B1	1		
	+----------+							
	| 55422C | PANEL, INSTRUMENT CLUSTER FINISH, CENTER UPPER							
	+----------+							
1111 - 1507	F650..STD		BLACK(TRIM1#)		55422-BZ040-C0	1		
1111 - 1507	F651		BLACK(TRIM4#)		55422-BZ040-C0	1		
1111 - 1507	F650..LO		BLACK(TRIM4#)		55422-BZ040-C0	1		
1507 - 1607	F650..STD		BLACK(TRIM1#)		55422-BZ040-C0	1		
1507 - 1901	F653		BLACK(TRIM4#)		55422-BZ040-C0	1		
1507 - 1901	F650..LO		BLACK(TRIM4#)		55422-BZ040-C0	1		
1901 -	F65#		BLACK(TRIM4#)		55422-BZ040-C0	1		
	+----------+							
	| 55432B | PANEL, INSTRUMENT PANEL FINISH, LOWER							
	+----------+							
1507 - 1607	F650..STD		DK.GRAY(TRIM1#)		55432-BZ080-B0	1		
1507 - 1901	F653		OAK(TRIM4#)		55432-BZ080-E0	1		
1507 - 1901	F650..LO		OAK(TRIM4#)		55432-BZ080-E0	1		
1901 -	F65#		LINEN BEIGE(TRIM4#)		55432-BZ080-E1	1		
	+----------+							
	| 55453D | PAD, INSTRUMENT PANEL SAFETY, NO.1							
	+----------+							
1305 - 1507	F65#				55453-B0010-	1		
1507 - 1607	F650				55453-B0010-	1		
1507 - 1901	F653				55453-B0010-	1		
1901 -	F65#				55453-B0010-	1		
	+----------+							
	| 55454B | PAD, INSTRUMENT PANEL SAFETY, NO.2							
	+----------+							
1305 - 1507	F65#				55454-B0010-	1		
1507 - 1607	F650				55454-B0040-	1		
1507 - 1901	F653				55454-B0040-	1		

PROD_DATE	MODELS	SPEC CODE	DESCRIPTION	R/P	PART NUMBER	QYT	REV_REF FR	REV_REF TO
	+----------+							
	| 55454B | PAD, INSTRUMENT PANEL SAFETY, NO.2							
	CONTINUED--+							
1901 -	F65#				55454-B0040-	1		
	+----------+							
	| 55458B | COVER, INSTRUMENT, LWR							
	+----------+							
1111 - 1507	F650..STD		BLACK(TRIM1#)		55458-BZ020-C0	1		
1111 - 1507	F651		BLACK(TRIM4#)		55458-BZ020-C0	1		
1111 - 1507	F650..LO		BLACK(TRIM4#)		55458-BZ020-C0	1		
1507 - 1607	F650..STD		BLACK(TRIM1#)		55458-BZ020-C0	1		
1507 - 1901	F653		BLACK(TRIM4#)		55458-BZ020-C0	1		
1507 - 1901	F650..LO		BLACK(TRIM4#)		55458-BZ020-C0	1		
1901 -	F65#		BLACK(TRIM4#)		55458-BZ020-C0	1		
	+----------+							
	| 55458D | COVER, INSTRUMENT LOWER, RH							
	+----------+							
1901 -	F65#		LINEN BEIGE(TRIM4#)		55458-BZ040-E0	1		
	+----------+							
	| 55458E | CLIP(FOR INSTRUMENT LOWER COVER)							
	+----------+							
1507 - 1607	F650..STD		DK.GRAY(TRIM1#)		90044-67579-B0	2		
1507 - 1901	F653		OAK(TRIM4#)		90044-67579-E4	2		
1507 - 1901	F650..LO		OAK(TRIM4#)		90044-67579-E4	2		
1901 -	F65#		LINEN BEIGE(TRIM4#)		90044-67579-E5	2		
	+----------+							
	| 55468C | SEAL, INSTRUMENT CLUSTER FINISH PANEL, NO							
	+----------+ .1							
1111 - 1507	F65#				55696-BZ010-	1		
	+----------+							
	| 55476C | GARNISH, INSTRUMENT PANEL FINISH PLATE							
	+----------+							
1507 - 1607	F650..STD		SILVER(TRIM1#)		55476-BZ010-B0	1		
1507 - 1901	F653		SILVER(TRIM4#)		55476-BZ010-B0	1		
1507 - 1901	F650..LO		SILVER(TRIM4#)		55476-BZ010-B0	1		
1901 -	F65#		SILVER(TRIM4#)		55476-BZ010-B0	1		

FIG.55-51 INSTRUMENT PANEL & GLOVE COMPARTMENT

PROD_DATE	MODELS	SPEC CODE	DESCRIPTION	R/P	PART NUMBER	QYT	REV_REF FR	REV_REF TO
	+----------+							
	| 55479C | CLIP(FOR INSTRUMENT LOWER COVER)							
	+----------+							
1111 - 1507	F65#				90467-07215-	4		
1507 - 1607	F65#				90467-07215-	4		
1608 - 1901	F653				9004A-46388-	4		
1901 -	F65#				9004A-46388-	4		
	+----------+							
	| 55501A | DOOR SUB-ASSY, GLOVE COMPARTMENT							
	+----------+							
1111 - 1507	F650..STD		MD.GRAY(TRIM1#)		55501-BZ050-B0	1		
1111 - 1507	F651		-(TRIM4#)		55501-BZ050-E0	1		
1111 - 1507	F650..LO		-(TRIM4#)		55501-BZ050-E0	1		
1507 - 1607	F650..STD		DK.GRAY(TRIM1#)		55501-BZ050-B1	1		
1507 - 1901	F653		OAK(TRIM4#)		55501-BZ050-E1	1		
1507 - 1901	F650..LO		OAK(TRIM4#)		55501-BZ050-E1	1		
1901 - 1912	F65#		LINEN BEIGE(TRIM4#)		55501-BZ050-E2	1		
1912 -	F65#		LINEN BEIGE(TRIM4#)		55501-BZ050-E3	1		
	+----------+							
	| 55521C | COVER, STEREO OPENING							
	+----------+							
1111 - 1507	F650..STD		BLACK(TRIM1#)		55521-BZ010-C0	1		
1111 - 1507	F651		BLACK(TRIM4#)		55521-BZ010-C0	1		
1111 - 1507	F650..LO		BLACK(TRIM4#)		55521-BZ010-C0	1		
	+----------+							
	| 55522B | COVER, RADIO TUNER OPENING							
	+----------+							
1507 - 1607	F650..LO				55522-BZ070-	1		
1507 - 1607	F650..STD				55522-BZ070-	2		
	+----------+							
	| 55532B | COVER, CIGAR LIGHTER HOLE							
	+----------+							
1712 - 1901	F653		OAK(TRIM4#)		55532-BZ010-E0	1		

PROD_DATE	MODELS	SPEC CODE	DESCRIPTION	R/P	PART NUMBER	QYT	REV_REF FR	REV_REF TO
	+----------+							
	| 55539 | COVER, SPARE SWITCH HOLE							
	+----------+							
1507 - 1607	F650		DK.GRAY		55539-B2030-B2	1		
				#	(55539-B2030-C1)	1		
1507 - 1702	F653		DK.GRAY		55539-B2030-B2	1		
				#	(55539-B2030-C1)	1		
1702 - 1711	F653		BLACK		55539-B2030-C1	1		
1711 - 1901	F653		BLACK		55539-BZ090-C0	1		
				#	(55539-B2030-C1)	1		
1901 -	F65#		BLACK		55539-BZ090-C0	1		
				#	(55539-B2030-C1)	1		
	+----------+							
	| 55539D | COVER, SPARE SWITCH HOLE							
	+----------+							
1901 -	F65#		LINEN BEIGE(TRIM4#)		55539-B1030-E2	1		
	+----------+							
	| 55539E | COVER, SPARE SWITCH HOLE							
	+----------+							
1111 - 1507	F650..STD		DK.GRAY(TRIM1#)		55539-BZ020-B0	1		
				#	(55539-B2010-B0)	1		
1111 - 1507	F651		DK.GRAY(TRIM4#)		55539-BZ020-B0	1		
				#	(55539-B2010-B0)	1		
1111 - 1507	F650..LO		DK.GRAY(TRIM4#)		55539-BZ020-B0	1		
				#	(55539-B2010-B0)	1		
1507 - 1607	F650..STD		DK.GRAY(TRIM1#)		55539-BZ020-B0	1		
				#	(55539-B2010-B0)	1		
1507 - 1901	F653		DK.GRAY(TRIM4#)		55539-BZ020-B0	1		
				#	(55539-B2010-B0)	1		
1507 - 1901	F650..LO		DK.GRAY(TRIM4#)		55539-BZ020-B0	1		
				#	(55539-B2010-B0)	1		
1901 -	F65#		BLACK(TRIM4#)		55539-BZ090-C0	1		
				#	(55539-B2030-C1)	1		
	+----------+							
	| 55539F | COVER, SPARE SWITCH HOLE							
	+----------+							
1111 - 1507	F650..STD		DK.GRAY(TRIM1#),RR D		55539-BZ020-B0	1		
			EFOGGER SWITCH	#	(55539-B2010-B0)	1		
1111 - 1507	F651		DK.GRAY(TRIM4#),RR D		55539-BZ020-B0	1		
			EFOGGER SWITCH	#	(55539-B2010-B0)	1		

FIG.55-51 INSTRUMENT PANEL & GLOVE COMPARTMENT

PROD_DATE	MODELS	SPEC CODE	DESCRIPTION	R/P	PART NUMBER	QYT	REV_REF FR	REV_REF TO
	+----------+							
	| 55539F | COVER, SPARE SWITCH HOLE							
	CONTINUED--+							
1111 - 1507	F650..LO		DK.GRAY(TRIM4#),RR D		55539-BZ020-B0	1		
			EFOGGER SWITCH	#	(55539-B2010-B0)	1		
1507 - 1607	F650..STD		DK.GRAY(TRIM1#),RR D		55539-BZ020-B0	1		
			EFOGGER SWITCH	#	(55539-B2010-B0)	1		
1507 - 1607	F650..LO		DK.GRAY(TRIM4#),RR D		55539-BZ020-B0	1		
			EFOGGER SWITCH	#	(55539-B2010-B0)	1		
1507 - 1901	F653		DK.GRAY(TRIM4#),RR D		55539-BZ020-B0	1		
			EFOGGER SWITCH	#	(55539-B2010-B0)	1		
	+----------+							
	| 55545 | COVER, FUSE BOX OPENING							
	+----------+							
1111 - 1507	F650..STD		MD.GRAY(TRIM1#)		55545-BZ040-B0	1		
1111 - 1507	F651		-(TRIM4#)		55545-BZ040-E0	1		
1111 - 1507	F650..LO		-(TRIM4#)		55545-BZ040-E0	1		
1507 - 1607	F650..STD		DK.GRAY(TRIM1#)		55540-BZ010-B0	1		
1507 - 1901	F653		OAK(TRIM4#)		55540-BZ010-E0	1		
1507 - 1901	F650..LO		OAK(TRIM4#)		55540-BZ010-E0	1		
1901 -	F65#		LINEN BEIGE(TRIM4#)		55540-BZ010-E1	1		
	+----------+							
	| 55547 | COVER, REMOTE CONTROL MIRROR HOLE							
	+----------+							
1111 - 1507	F650..STD		DK.GRAY(TRIM1#)		55547-28010-B1	1		
1111 - 1507	F651..STD		DK.GRAY(TRIM4#)		55547-28010-B1	1		
1507 - 1601	F650..STD		DK.GRAY(TRIM1#)		55547-28010-B1	1		
1507 - 1601	F650..LO		DK.GRAY(TRIM4#)		55547-28010-B1	1		
1602 - 1607	F650..STD		DK.GRAY(TRIM1#)		55547-BZ030-B0	1		
				#	(55547-28010-B1)	1		
1602 - 1607	F650..LO		DK.GRAY(TRIM4#)		55547-BZ030-B0	1		
				#	(55547-28010-B1)	1		
1610 - 1901	F653..LO..5F	B2AE	INDONESIA TAXI,DK.GR		55547-BZ030-B0	1		
			AY(TRIM4#)	#	(55547-28010-B1)	1		
1901 - 1911	F653..LO..5F	B2AE	INDONESIA TAXI,DK.GR		55547-BZ030-B0	1		
			AY(TRIM4#)	#	(55547-28010-B1)	1		

PROD_DATE	MODELS	SPEC CODE	DESCRIPTION	R/P	PART NUMBER	QYT	REV_REF FR	REV_REF TO
	+----------+							
	| 55547 | COVER, REMOTE CONTROL MIRROR HOLE							
	CONTINUED--+							
1911 -	F653..LO..5F	B2AE	INDONESIA TAXI,BLACK (TRIM4#)	#	55547-BZ030-C1 (55547-28010-C3)	1 1		
	+----------+							
	| 55557A | CUSHION, GLOVE COMPARTMENT DOOR CHECK							
	+----------+							
1111 - 1507	F65#				55557-B2040-	2		
1507 - 1901	F65#				55557-B2040-	2		
1901 -	F65#				55557-B2040-	2		
	+----------+							
	| 55560A | LOCK ASSY, GLOVE COMPARTMENT DOOR							
	+----------+							
1111 - 1507	F650..STD		MD.GRAY(TRIM1#)		55560-BZ050-B1	1		
1111 - 1507	F651		-(TRIM4#)		55560-BZ050-E0	1		
1111 - 1507	F650..LO		-(TRIM4#)		55560-BZ050-E0	1		
1507 - 1607	F650..STD		DK.GRAY(TRIM1#)		55560-BZ050-B0	1		
1507 - 1901	F653		OAK(TRIM4#)		55560-BZ050-E1	1		
1507 - 1901	F650..LO		OAK(TRIM4#)		55560-BZ050-E1	1		
1901 -	F65#		LINEN BEIGE(TRIM4#)		55560-BZ050-E2	1		
	+----------+							
	| 55561A | STRIKER, GLOVE COMPARTMENT DOOR LOCK							
	+----------+							
1111 - 1507	F65#				55561-BZ080-	1		
1507 - 1607	F650				55561-BZ080-	1		
1507 - 1901	F653				55561-BZ080-	1		
1901 -	F65#				55561-BZ080-	1		
	+----------+							
	| 55606 | COVER SUB-ASSY, INSTRUMENT PANEL UNDER, NO.1							
	+----------+							
1111 - 1507	F650..STD		BLACK(TRIM1#)		55641-BZ140-C0	1		
1111 - 1507	F651		BLACK(TRIM4#)		55641-BZ140-C0	1		
1111 - 1507	F650..LO		BLACK(TRIM4#)		55641-BZ140-C0	1		
1507 - 1607	F650..STD		BLACK(TRIM1#)		55641-BZ170-C0	1		

FIG.55-51 INSTRUMENT PANEL & GLOVE COMPARTMENT

PROD_DATE	MODELS	SPEC CODE	DESCRIPTION	R/P	PART NUMBER	QYT	REV_REF FR	REV_REF TO
	+----------+							
	| 55606 | COVER SUB-ASSY, INSTRUMENT PANEL UNDER, NO.1							
	CONTINUED--+							
1507 - 1901	F653		BLACK(TRIM4#)		55641-BZ170-C0	1		
1507 - 1901	F650..LO		BLACK(TRIM4#)		55641-BZ170-C0	1		
1901 -	F65#		LINEN BEIGE(TRIM4#)		55641-BZ170-E0	1		
	+----------+							
	| 55608 | COVER SUB-ASSY, INSTRUMENT PANEL UNDER, NO.3							
	+----------+							
1111 - 1507	F650..STD		BLACK(TRIM1#)		55646-BZ100-C0	1		
1111 - 1507	F651		BLACK(TRIM4#)		55646-BZ100-C0	1		
1111 - 1507	F650..LO		BLACK(TRIM4#)		55646-BZ100-C0	1		
1507 - 1607	F650..STD		BLACK(TRIM1#)		55646-BZ110-C0	1		
1507 - 1901	F653		BLACK(TRIM4#)		55646-BZ110-C0	1		
1507 - 1901	F650..LO		BLACK(TRIM4#)		55646-BZ110-C0	1		
1901 -	F65#		LINEN BEIGE(TRIM4#)		55646-BZ110-E0	1		
	+----------+							
	| 55642 | COVER, INSTRUMENT PANEL UNDER, NO.2							
	+----------+							
1111 - 1507	F650..STD		BLACK(TRIM1#)		55642-BZ120-C0	1		
1111 - 1507	F651		BLACK(TRIM4#)		55642-BZ120-C0	1		
1111 - 1507	F650..LO		BLACK(TRIM4#)		55642-BZ120-C0	1		
1507 - 1508	F650..STD		BLACK(TRIM1#)		55642-BZ120-C0	1		
1507 - 1508	F653		BLACK(TRIM4#)		55642-BZ120-C0	1		
1507 - 1508	F650..LO		BLACK(TRIM4#)		55642-BZ120-C0	1		
1508 - 1607	F650..STD		BLACK(TRIM1#)		55642-BZ121-C0	1		
1508 - 1712	F653		BLACK(TRIM4#)		55642-BZ121-C0	1		
1508 - 1712	F650..LO		BLACK(TRIM4#)		55642-BZ121-C0	1		
1712 - 1812	F653		BLACK(TRIM4#)		55642-BZ121-C1	1		
1901 -	F65#		BLACK(TRIM4#)		55642-BZ122-C1	1		

PROD_DATE	MODELS	SPEC CODE	DESCRIPTION	R/P	PART NUMBER	QYT	REV_REF FR	REV_REF TO
	+----------+ | 55650 | REGISTER ASSY, INSTRUMENT PANEL, NO.1 +----------+							
1111 - 1305	F651		-(TRIM4#)		55650-BZ140-C1	1		
1111 - 1305	F650..LO		-(TRIM4#)		55650-BZ140-C1	1		
1111 - 1507	F650..STD		-(TRIM1#)		55650-BZ140-C1	1		
1305 - 1507	F651		-(TRIM4#)		55650-BZ180-C1	1		
1305 - 1507	F650..LO		-(TRIM4#)		55650-BZ180-C1	1		
1507 - 1607	F650..STD		-(TRIM1#)		55650-BZ140-C1	1		
1507 - 1901	F653		BLACK(TRIM4#)		55650-BZ180-C2	1		
1507 - 1901	F650..LO		BLACK(TRIM4#)		55650-BZ180-C2	1		
1610 - 1901	F653..LO..5F	B2AE	INDONESIA TAXI,-(TRIM4#)		55650-BZ140-C1	1		
1901 -	F653..LO..5F	B2AE	INDONESIA TAXI,-(TRIM4#)		55650-BZ140-C1	1		
1901 -	F65#		BLACK(TRIM4#)		55650-BZ180-C2	1		
	+----------+ | 55660 | REGISTER ASSY, INSTRUMENT PANEL, NO.2 +----------+							
1111 - 1305	F651		-(TRIM4#)		55660-BZ080-C1	1		
1111 - 1305	F650..LO		-(TRIM4#)		55660-BZ080-C1	1		
1111 - 1507	F650..STD		-(TRIM1#)		55660-BZ080-C1	1		
1305 - 1507	F651		-(TRIM4#)		55660-BZ100-C1	1		
1305 - 1507	F650..LO		-(TRIM4#)		55660-BZ100-C1	1		
1507 - 1607	F650..STD		-(TRIM1#)		55660-BZ080-C1	1		
1507 - 1901	F653		BLACK(TRIM4#)		55660-BZ100-C2	1		
1507 - 1901	F650..LO		BLACK(TRIM4#)		55660-BZ100-C2	1		
1610 - 1901	F653..LO..5F	B2AE	INDONESIA TAXI,-(TRIM4#)		55660-BZ080-C1	1		
1901 -	F653..LO..5F	B2AE	INDONESIA TAXI,-(TRIM4#)		55660-BZ080-C1	1		
1901 -	F65#		BLACK(TRIM4#)		55660-BZ100-C2	1		

FIG.55-51 INSTRUMENT PANEL & GLOVE COMPARTMENT

PROD_DATE	MODELS	SPEC CODE	DESCRIPTION	R/P	PART NUMBER	QYT	REV_REF FR	REV_REF TO
	+----------+ | 73970A | AIR BAG ASSY, INSTRUMENT PANEL PASSENGER +----------+							
1305 - 1507	F650..STD		DK.GRAY(TRIM1#)		73970-BZ100-B0	1		
1305 - 1507	F651		DK.GRAY(TRIM4#)		73970-BZ100-B0	1		
1305 - 1507	F650..LO		DK.GRAY(TRIM4#)		73970-BZ100-B0	1		
1507 - 1607	F650..STD		DK.GRAY(TRIM1#)		73970-BZ170-B0	1		
1507 - 1901	F653		DK.GRAY(TRIM4#)		73970-BZ170-B0	1		
1507 - 1901	F650..LO		DK.GRAY(TRIM4#)		73970-BZ170-B0	1		
1901 -	F65#		DK.GRAY(TRIM4#)		73970-BZ170-B0	1		
	+----------+ | 74128 | SUPPORT, FRONT ASH RECEPTACLE RETAINER +----------+							
1111 - 1507	F65#				74128-BZ010-	1		
	+----------+ | 74133 | SEAL, FRONT ASH RECEPTACLE +----------+							
1111 - 1507	F65#				74133-BZ030-	1		
	+----------+ | 74635 | HOLDER, CARD +----------+							
1901 -	F65#		BLACK METALLIC(TRIM4#)		74635-BZ090-C0	1		

(1111-)

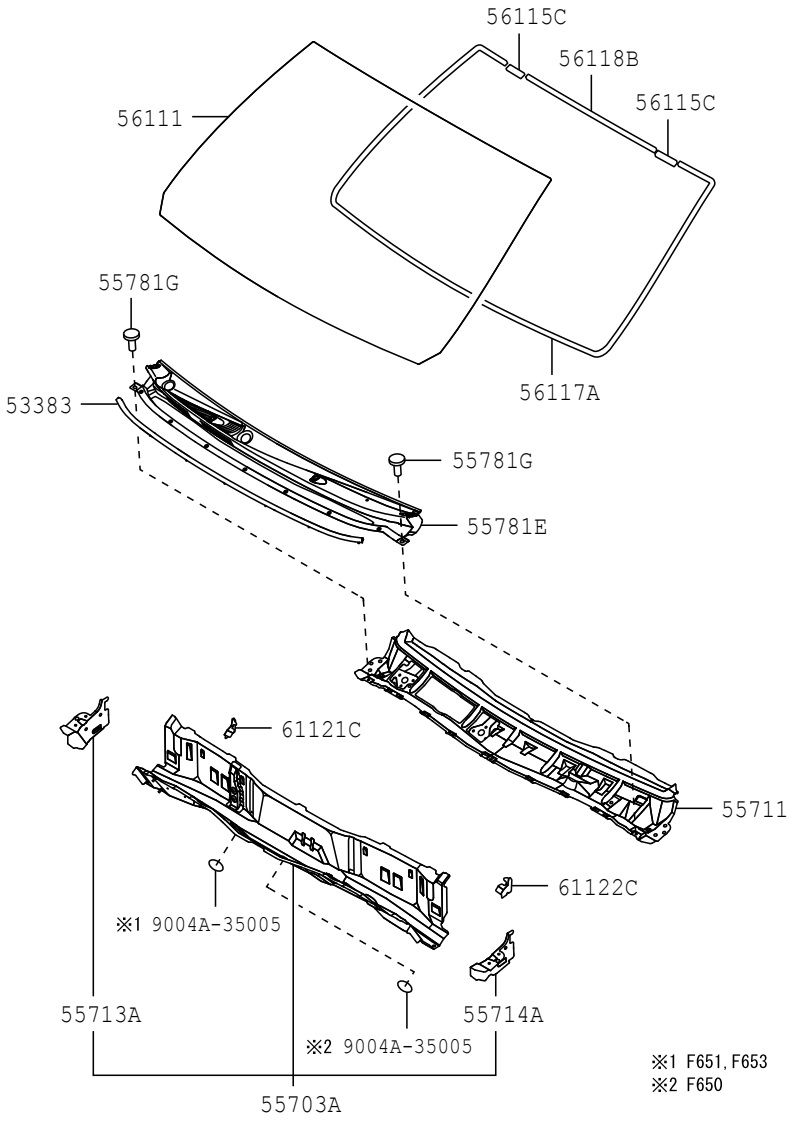

FIG.55-53 COWL PANEL & WINDSHIELD GLASS

PROD_DATE	MODELS	SPEC CODE	DESCRIPTION	R/P	PART NUMBER	QYT	REV_REF FR	REV_REF TO
	| 53383 | SEAL, HOOD TO COWL TOP							
1111 - 1507	F65#				53383-BZ090-	1		
1507 - 1607	F650				53383-BZ090-	1		
1507 - 1901	F653				53383-BZ090-	1		
1901 -	F65#				53383-BZ090-	1		
	| 55703A | PANEL SUB-ASSY, COWL TOP, INNER							
1111 - 1203	F65#				55703-BZ240-	1		
1203 - 1507	F65#				55703-BZ241-	1		
1507 - 1607	F650				55703-BZ600-	1		
1507 - 1901	F653..LO..E4AT				55703-BZ410-	1		
1507 - 1901	F653..STD..E4AT				55703-BZ430-	1		
1507 - 1901	F653..LO..5F				55703-BZ600-	1		
1507 - 1901	F653..STD..5F				55703-BZ610-	1		
1901 -	F654				55703-BZ430-	1		
1901 -	F653..E4AT				55703-BZ430-	1		
1901 -	F653..5F				55703-BZ610-	1		
	| 55711 | PANEL, COWL TOP, OUTER							
1111 - 1507	F65#				55701-BZ150-	1		
1507 - 1607	F650				55711-BZ191-	1		
1507 - 1901	F653				55711-BZ191-	1		
1901 -	F65#				55711-BZ191-	1		
	| 55713A | PANEL, COWL TOP SIDE, RH							
1111 - 1507	F65#				55713-BZ040-	1		
1507 - 1607	F650				55713-BZ140-	1		
1507 - 1901	F653				55713-BZ140-	1		

PROD_DATE	MODELS	SPEC CODE	DESCRIPTION	R/P	PART NUMBER	QYT	REV_REF FR	REV_REF TO
	+----------+							
	| 55713A | PANEL, COWL TOP SIDE, RH							
	CONTINUED--+							
1901 -	F65#				55713-BZ140-	1		
	+----------+							
	| 55714A | PANEL, COWL TOP SIDE, LH							
	+----------+							
1111 - 1507	F65#				55714-BZ040-	1		
1507 - 1607	F650				55714-BZ140-	1		
1507 - 1901	F653				55714-BZ140-	1		
1901 -	F65#				55714-BZ140-	1		
	+----------+							
	| 55781E | LOUVER SUB-ASSY, COWL TOP VENTILATOR							
	+----------+							
1111 - 1507	F65#				55708-BZ030-	1		
1507 - 1607	F650				55708-BZ100-	1		
1507 - 1901	F653				55708-BZ100-	1		
1901 -	F65#				55708-BZ100-	1		
	+----------+							
	| 55781G | CLIP, COWL TOP VENTILATOR LOUVER							
	+----------+							
1111 - 1507	F65#		DK.GRAY		90044-67579-B0	2		
1507 - 1607	F650		DK.GRAY		90044-67579-B0	2		
1507 - 1702	F653		DK.GRAY		90044-67579-B0	2		
1702 - 1901	F653		BLACK		90044-67579-C2	2		
1901 -	F65#		BLACK		90044-67579-C2	2		
	+----------+							
	| 56111 | GLASS, WINDSHIELD							
	+----------+							
1111 - 1202	F65#		GREEN,ASAHIMAS		56111-BZ300-	1		
1111 - 1202	F65#		GREEN,MULIA GLASS		56111-BZ310-	1		
1203 - 1507	F65#		GREEN,ASAHIMAS		56111-BZ301-	1		
1203 - 1507	F65#		GREEN,MULIA GLASS		56111-BZ311-	1		
1507 - 1607	F650		ASAHIMAS		56111-BZ330-	1		
1507 - 1607	F650		MULIA GLASS		56111-BZ440-	1		

FIG.55-53 COWL PANEL & WINDSHIELD GLASS

PROD_DATE	MODELS	SPEC CODE	DESCRIPTION	R/P	PART NUMBER	QYT	REV_REF FR	REV_REF TO
	+----------+							
	| 56111 | GLASS, WINDSHIELD							
	CONTINUED--+							
1507 - 1901	F653		ASAHIMAS		56111-BZ330-	1		
1507 - 1901	F653		MULIA GLASS		56111-BZ440-	1		
1901 -	F65#		ASAHIMAS		56111-BZ330-	1		
1901 -	F65#		MULIA GLASS		56111-BZ440-	1		
	+----------+							
	| 56115C | STOPPER, WINDSHIELD GLASS							
	+----------+							
1111 - 1507	F65#				56115-BZ020-	2		
1507 - 1607	F650				56115-BZ020-	2		
1507 - 1901	F653				56115-BZ020-	2		
1901 -	F65#				56115-BZ020-	2		
	+----------+							
	| 56117A | DAM, WINDOW GLASS ADHESIVE							
	+----------+							
1111 - 1507	F65#		L=3078		56117-BZ100-	1		
1507 - 1607	F650		L=3078		56117-BZ100-	1		
1507 - 1901	F653		L=3078		56117-BZ100-	1		
1901 -	F65#		L=3078		56117-BZ100-	1		
	+----------+							
	| 56118B | DAM, WINDOW GLASS ADHESIVE, NO.2							
	+----------+							
1111 - 1507	F65#		L=629		56117-BZ120-	1		
1507 - 1607	F650		L=629		56117-BZ120-	1		
1507 - 1901	F653		L=629		56117-BZ120-	1		
1901 -	F65#		L=629		56117-BZ120-	1		
	+----------+							
	| 61121C | PANEL, COWL SIDE, OUTER RH							
	+----------+							
1111 - 1507	F65#				61121-BZ050-	1		
1507 - 1607	F650				61121-BZ050-	1		
1507 - 1901	F653				61121-BZ050-	1		
1901 -	F65#				61121-BZ050-	1		

FIG.55-53 COWL PANEL & WINDSHIELD GLASS

PROD_DATE	MODELS	SPEC CODE	DESCRIPTION	R/P	PART NUMBER	QYT	REV_REF FR	REV_REF TO
	+----------+ | 61122C | PANEL, COWL SIDE, OUTER LH +----------+							
1111 - 1507	F65#				61122-BZ050-	1		
1507 - 1607	F650				61122-BZ050-	1		
1507 - 1901	F653				61122-BZ050-	1		
1901 -	F65#				61122-BZ050-	1		

FIG.57-52 HOLE PLUG

(1111-)

ILLUST NO. 3 OF 3

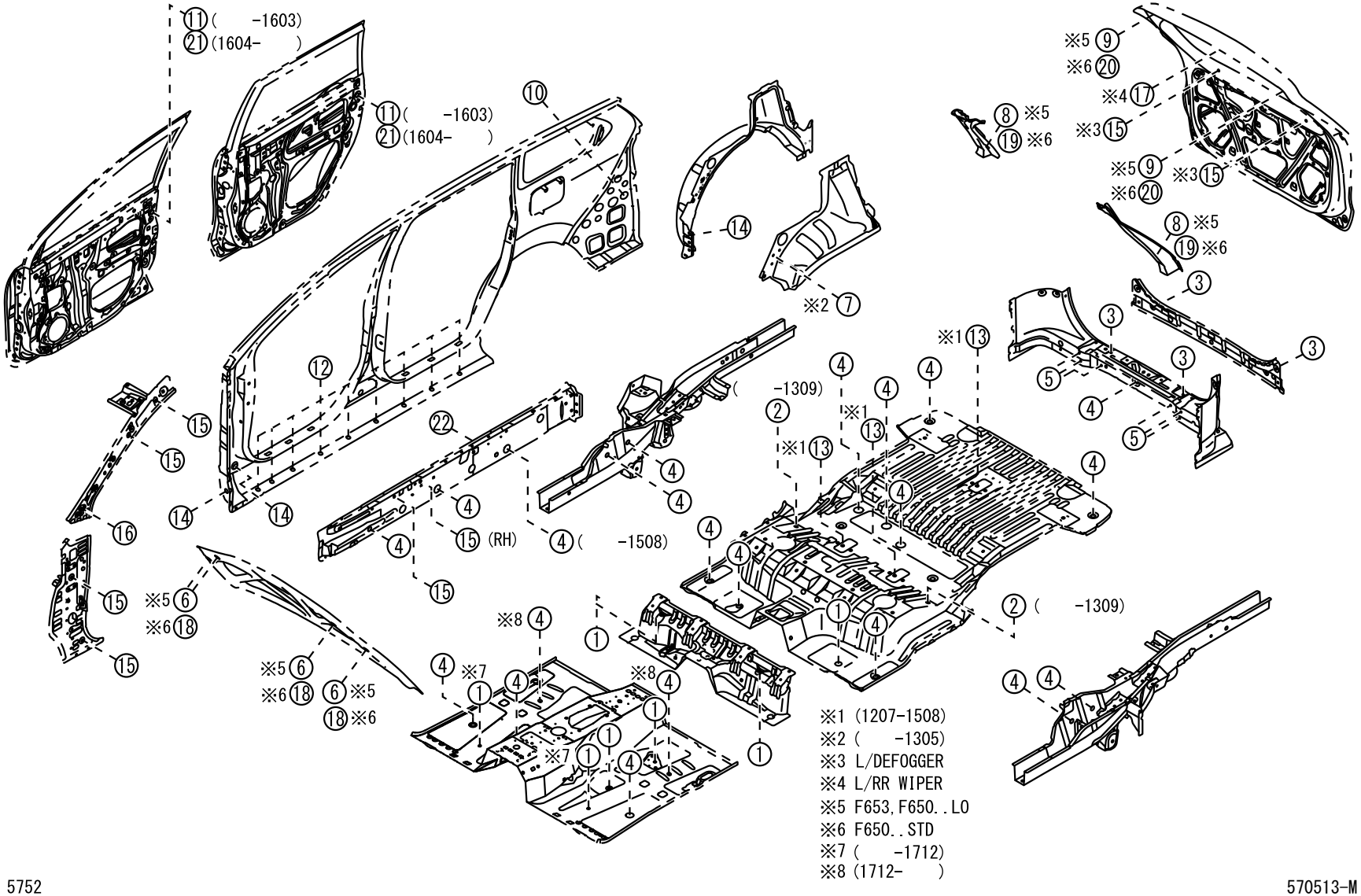
11 (-1603)
21 (1604-)
11 (-1603)
21 (1604-)
10
14
※2 7
※5 9
※6 20
※4 17
※3 15
8 ※5
19 ※6
※5 9
※6 20
※3 15
8 ※5
19 ※6
3
3
3
3
※1 13
5
4
5
4
4
4

(1111-)

ILLUST NO. 1 OF 3

①	58136-BZ010	②	90048-71186	③	9004A-35005	④	9004A-95048
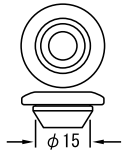		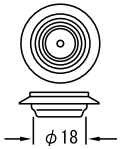		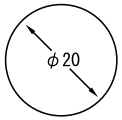		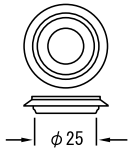	
⑤	9004A-95055	⑥	53393-52010	⑥	53393-BZ030	⑦	61667-BZ010
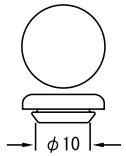		(-1510) 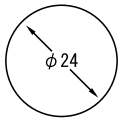		(1511-) 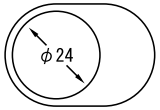		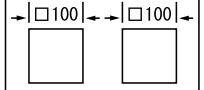	
⑧	67283-87501	⑧	67283-BZ010	⑨	90048-71312	⑨	9004A-95066
(-1508) 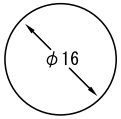		(1509-) 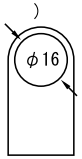		(-1510) 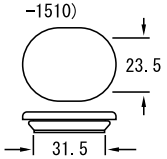		(1511-) 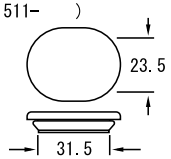	
⑩	9004A-35012	⑪	90048-71098	⑫	9004A-95054	⑬	9004A-95060
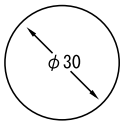		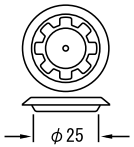		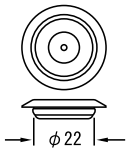		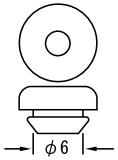	
⑭	90950-01959	⑮	9004A-35003	⑯	58159-BZ020-B0		58159-BZ020-C0
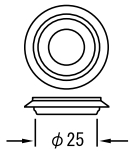		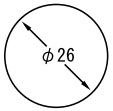		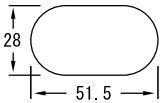			

『The installation position please refer to illust 2 of 2.』

(1111-)

ILLUST NO. 2 OF 3

⑰	85373-BZ050	⑱	53393-BZ030	⑲	67283-BZ010	⑳	9004A-95066
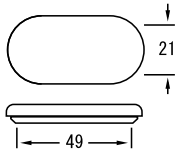		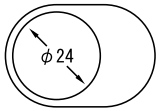		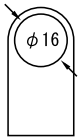		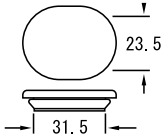	
㉑	9004A-95069	㉒	90048-74078				
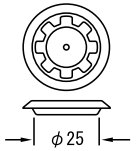		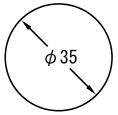					

『The installation position please refer to illust 3 of 3.』

FIG.58-51 FRONT FLOOR PANEL & FRONT FLOOR MEMBER

(1111-1305)

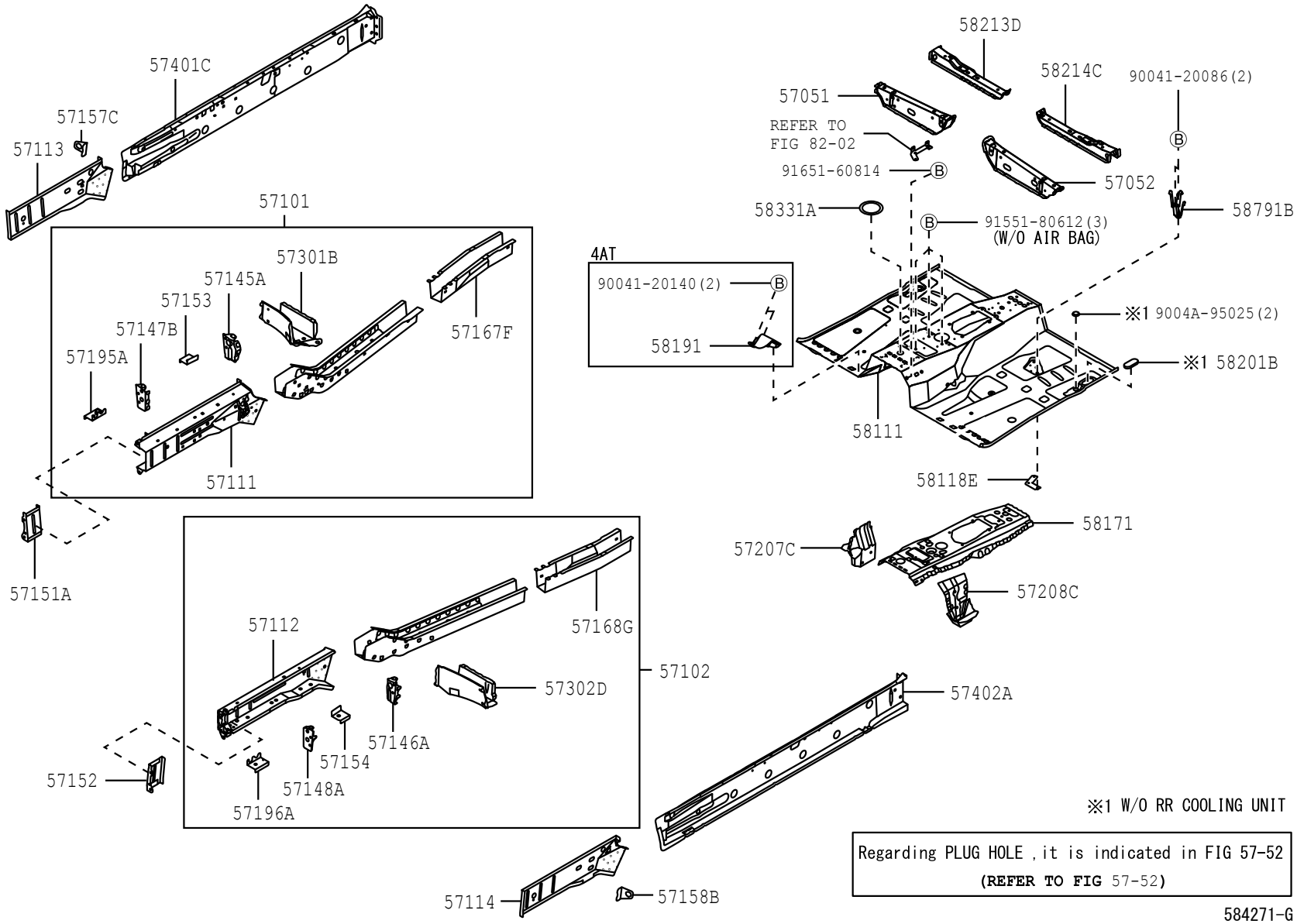

FIG.58-51 FRONT FLOOR PANEL & FRONT FLOOR MEMBER

(1305-1507)

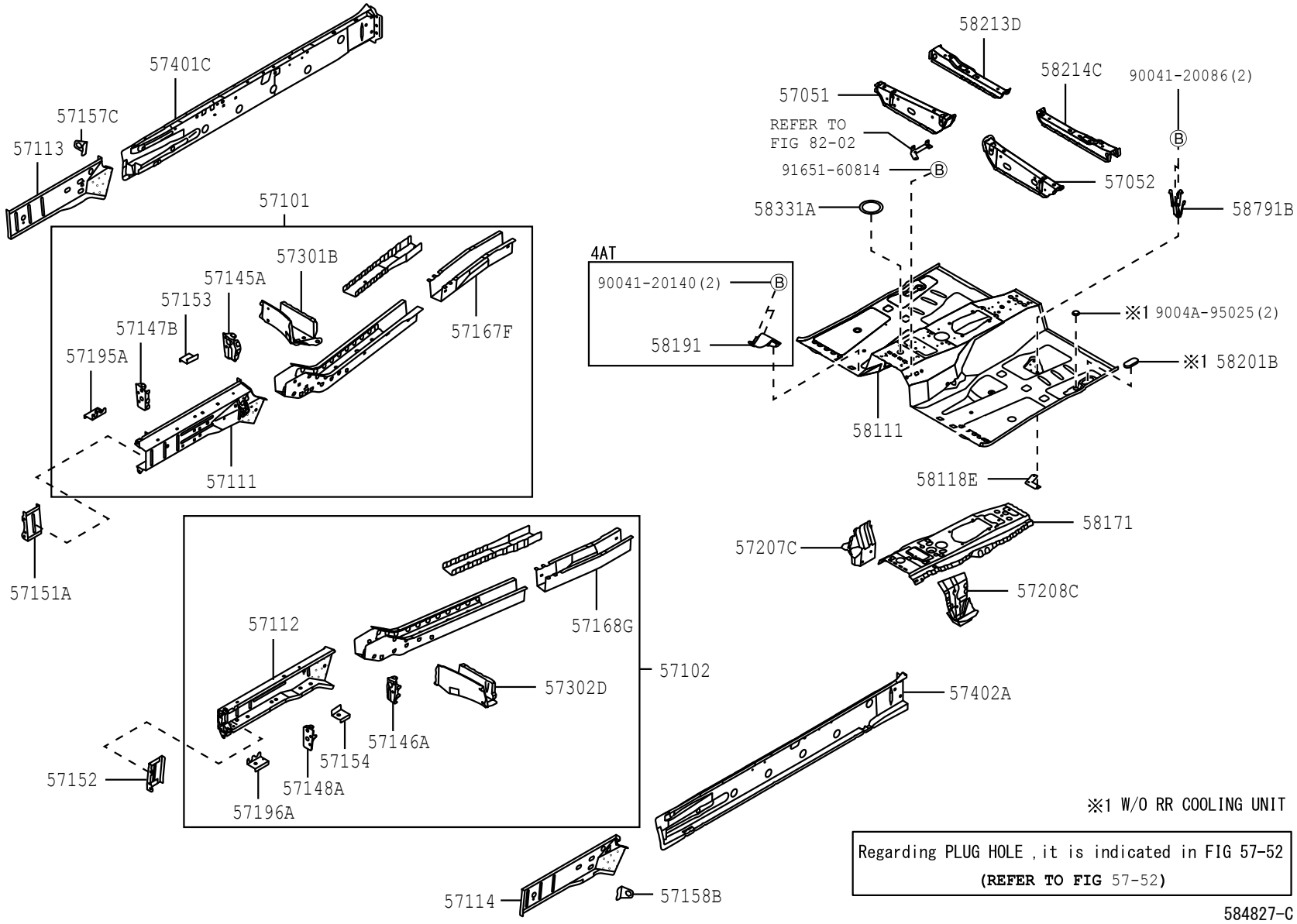

※1 W/O RR COOLING UNIT

Regarding PLUG HOLE , it is indicated in FIG 57-52
(REFER TO FIG 57-52**)**

5851

584827-C

FIG.58-51 FRONT FLOOR PANEL & FRONT FLOOR MEMBER

(1507-)

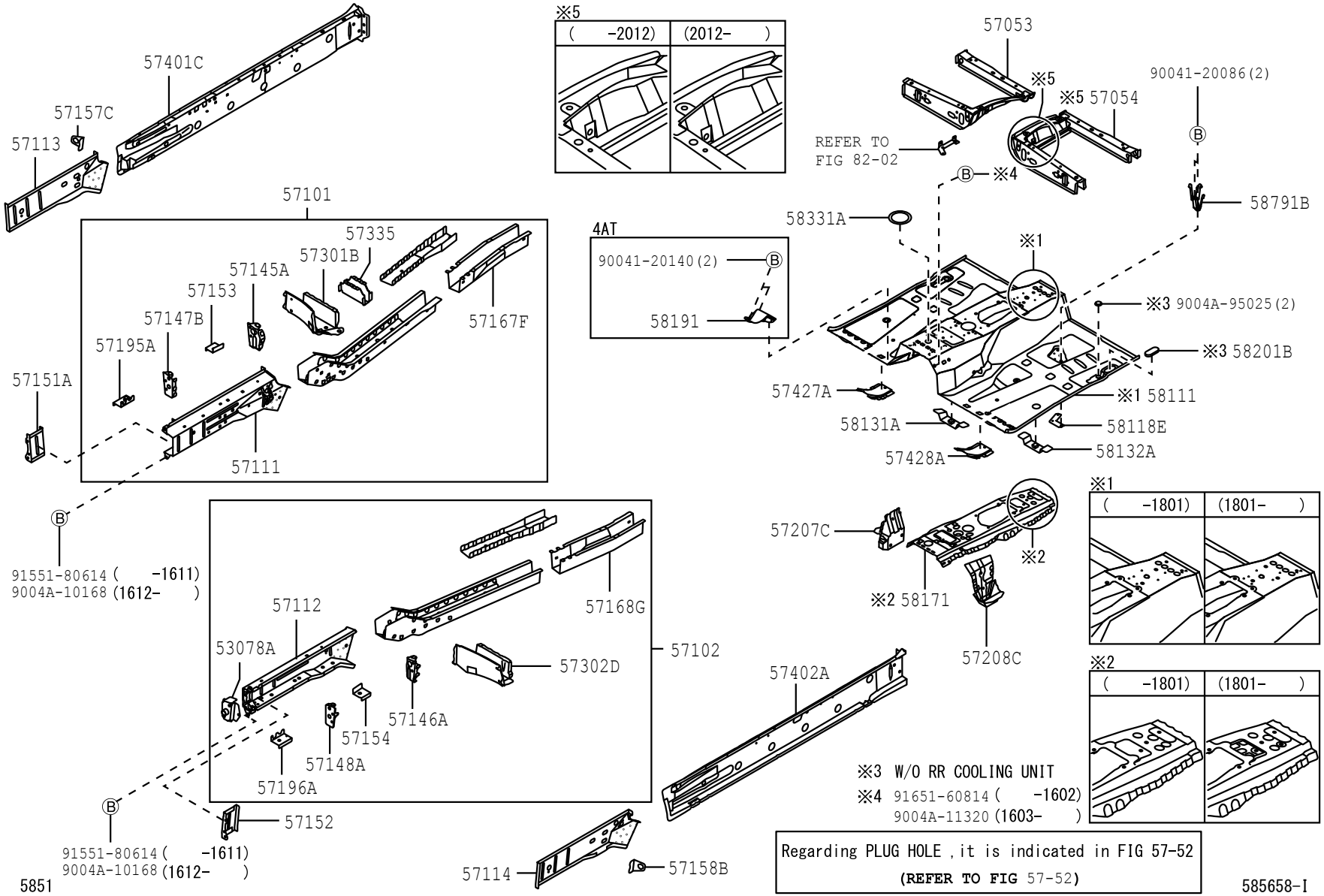

PROD_DATE	MODELS	SPEC CODE	DESCRIPTION	R/P	PART NUMBER	QYT	REV_REF FR	REV_REF TO
	53078A		EXTENSION SUB-ASSY, FRONT FENDER APRON, LH					
1507 - 1607	F650				53078-BZ090-	1		
1507 - 1901	F653				53078-BZ090-	1		
1901 -	F65#				53078-BZ090-	1		
	57051		MEMBER SUB-ASSY, FRONT FLOOR CROSS, RH					
1111 - 1312	F65#				57051-BZ150-	1		
1401 - 1507	F65#				57051-BZ151-	1		
	57052		MEMBER SUB-ASSY, FRONT FLOOR CROSS, LH					
1111 - 1312	F65#				57052-BZ100-	1		
1401 - 1507	F65#				57052-BZ101-	1		
	57053		REINFORCEMENT SUB-ASSY, FRONT FLOOR CROSS MEMBER, RH					
1507 - 1607	F650				57053-BZ030-	1		
1507 - 1901	F653				57053-BZ030-	1		
1901 -	F65#				57053-BZ030-	1		
	57054		REINFORCE SUB-ASSY, FRONT SIDE MEMBER, NO.5					
1507 - 1607	F650				57054-BZ050-	1		
1507 - 1901	F653				57054-BZ050-	1		
1901 -	F65#				57054-BZ050-	1		
	57101		MEMBER SUB-ASSY, FRONT SIDE, RH					
1111 - 1305	F65#				57101-BZ430-	1		
1305 - 1507	F65#				57101-BZ431-	1		
1507 - 1607	F650				57101-BZ530-	1		
1507 - 1901	F653				57101-BZ530-	1		
1901 -	F65#				57101-BZ660-	1		

FIG.58-51 FRONT FLOOR PANEL & FRONT FLOOR MEMBER

PROD_DATE	MODELS	SPEC CODE	DESCRIPTION	R/P	PART NUMBER	QYT	REV_REF FR	REV_REF TO
	57102		MEMBER SUB-ASSY, FRONT SIDE, LH					
1111 - 1305	F65#				57102-BZ430-	1		
1305 - 1507	F65#				57102-BZ431-	1		
1507 - 1607	F650				57102-BZ550-	1		
1507 - 1901	F653				57102-BZ550-	1		
1901 -	F65#				57102-BZ720-	1		
	57111		MEMBER, FRONT SIDE, RH					
1111 - 1507	F65#				57111-BZ060-	1		
1507 - 1607	F650				57111-BZ210-	1		
1507 - 1712	F653				57111-BZ210-	1		
1801 - 1901	F653				57111-BZ211-	1		
1901 -	F65#				57111-BZ211-	1		
	57112		MEMBER, FRONT SIDE, LH					
1111 - 1507	F65#				57112-BZ060-	1		
1507 - 1607	F650				57112-BZ230-	1		
1507 - 1712	F653				57112-BZ230-	1		
1801 - 1901	F653				57112-BZ231-	1		
1901 -	F65#				57112-BZ231-	1		
	57113		EXTENSION, FRONT SIDE MEMBER, RH					
1111 - 1507	F65#				57113-BZ020-	1		
1507 - 1607	F650				57113-BZ020-	1		
1507 - 1901	F653				57113-BZ020-	1		
1901 -	F65#				57113-BZ020-	1		
	57114		EXTENSION, FRONT SIDE MEMBER, LH					
1111 - 1507	F65#				57114-BZ030-	1		

PROD_DATE	MODELS	SPEC CODE	DESCRIPTION	R/P	PART NUMBER	QYT	REV_REF FR	REV_REF TO
	+----------+							
	| 57114 | EXTENSION, FRONT SIDE MEMBER, LH							
	CONTINUED--+							
1507 - 1607	F650				57114-BZ030-	1		
1507 - 1901	F653				57114-BZ030-	1		
1901 -	F65#				57114-BZ030-	1		
	+----------+							
	| 57145A | REINFORCEMENT, FRONT SIDE MEMBER, REAR RH							
	+----------+							
1111 - 1507	F65#				51501-BZ060-	1		
1507 - 1607	F650				51501-BZ060-	1		
1507 - 1901	F653				51501-BZ060-	1		
1901 -	F65#				51501-BZ060-	1		
	+----------+							
	| 57146A | REINFORCEMENT, FRONT SIDE MEMBER, REAR LH							
	+----------+							
1111 - 1507	F65#				51502-BZ070-	1		
1507 - 1607	F650				51502-BZ070-	1		
1507 - 1901	F653				51502-BZ070-	1		
1901 -	F65#				51502-BZ070-	1		
	+----------+							
	| 57147B | PLATE, FRONT SIDE MEMBER, REAR RH							
	+----------+							
1111 - 1507	F65#				57147-BZ010-	1		
1507 - 1607	F650				57147-BZ010-	1		
1507 - 1901	F653				57147-BZ010-	1		
1901 -	F65#				57147-BZ010-	1		
	+----------+							
	| 57148A | PLATE, FRONT SIDE MEMBER, REAR LH							
	+----------+							
1111 - 1507	F65#				57148-BZ010-	1		
1507 - 1607	F650				57148-BZ010-	1		
1507 - 1901	F653				57148-BZ010-	1		
1901 -	F65#				57148-BZ010-	1		

FIG.58-51 FRONT FLOOR PANEL & FRONT FLOOR MEMBER

PROD_DATE	MODELS	SPEC CODE	DESCRIPTION	R/P	PART NUMBER	QYT	REV_REF FR	REV_REF TO
	+----------+							
	| 57151A | REINFORCEMENT, FRONT SIDE MEMBER, NO.1 RH							
	+----------+							
1111 - 1507	F65#				57151-BZ040-	1		
1507 - 1607	F650				57151-BZ110-	1		
1507 - 1901	F653				57151-BZ110-	1		
1901 -	F65#				57151-BZ110-	1		
	+----------+							
	| 57152 | REINFORCEMENT, FRONT SIDE MEMBER, NO.1 LH							
	+----------+							
1111 - 1507	F65#				57152-BZ060-	1		
1507 - 1607	F650				57152-BZ130-	1		
1507 - 1901	F653				57152-BZ130-	1		
1901 -	F65#				57152-BZ130-	1		
	+----------+							
	| 57153 | REINFORCEMENT, FRONT SIDE MEMBER, NO.2 RH							
	+----------+							
1111 - 1507	F65#				57153-BZ020-	1		
1507 - 1607	F650				57153-BZ020-	1		
1507 - 1901	F653				57153-BZ020-	1		
1901 -	F65#				57153-BZ020-	1		
	+----------+							
	| 57154 | REINFORCEMENT, FRONT SIDE MEMBER, NO.2 LH							
	+----------+							
1111 - 1507	F65#				57154-BZ070-	1		
1507 - 1607	F650				57154-BZ070-	1		
1507 - 1901	F653				57154-BZ070-	1		
1901 -	F65#				57154-BZ070-	1		
	+----------+							
	| 57157C | BRACKET, FLEXIBLE HOSE, FRONT RH							
	+----------+							
1111 - 1507	F65#				57157-BZ010-	1		
1507 - 1607	F650				57157-BZ010-	1		
1507 - 1901	F653				57157-BZ010-	1		
1901 -	F65#				57157-BZ010-	1		

PROD_DATE	MODELS	SPEC CODE	DESCRIPTION	R/P	PART NUMBER	QYT	REV_REF FR	REV_REF TO
	+----------+							
	| 57158B | BRACKET, FLEXIBLE HOSE, FRONT LH							
	+----------+							
1111 - 1507	F65#				57158-BZ010-	1		
1507 - 1607	F650				57158-BZ010-	1		
1507 - 1901	F653				57158-BZ010-	1		
1901 -	F65#				57158-BZ010-	1		
	+----------+							
	| 57167F | REINFORCEMENT, FRONT CROSSMEMBER SIDE, RH							
	+----------+							
1111 - 1507	F65#				57167-BZ011-	1		
1507 - 1607	F650				57167-BZ011-	1		
1507 - 1901	F653				57167-BZ011-	1		
1901 -	F65#				57167-BZ011-	1		
	+----------+							
	| 57168G | MEMBER, FRONT FLOOR, LH							
	+----------+							
1111 - 1507	F65#				57168-BZ110-	1		
1507 - 1607	F650				57168-BZ110-	1		
1507 - 1901	F653				57168-BZ110-	1		
1901 -	F65#				57168-BZ110-	1		
	+----------+							
	| 57195A | REINFORCEMENT, FRONT SIDE MEMBER, FRONT R							
	+----------+ H							
1111 - 1507	F65#				57195-BZ050-	1		
1507 - 1607	F650				57195-BZ050-	1		
1507 - 1901	F653				57195-BZ050-	1		
1901 -	F65#				57195-BZ050-	1		
	+----------+							
	| 57196A | REINFORCEMENT, FRONT SIDE MEMBER, FRONT L							
	+----------+ H							
1111 - 1507	F65#				57196-BZ030-	1		
1507 - 1607	F650				57196-BZ030-	1		
1507 - 1901	F653				57196-BZ030-	1		
1901 -	F65#				57196-BZ030-	1		

FIG.58-51 FRONT FLOOR PANEL & FRONT FLOOR MEMBER

PROD_DATE	MODELS	SPEC CODE	DESCRIPTION	R/P	PART NUMBER	QYT	REV_REF FR	REV_REF TO
	+----------+							
	| 57207C | BRACKET SUB-ASSY, ENGINE REAR MOUNTING, R							
	+----------+ H							
1111 - 1507	F65#				57207-BZ040-	1		
1507 - 1607	F650				57207-BZ050-	1		
1507 - 1901	F653				57207-BZ050-	1		
1901 -	F65#				57207-BZ050-	1		
	+----------+							
	| 57208C | BRACKET SUB-ASSY, ENGINE REAR MOUNTING, L							
	+----------+ H							
1111 - 1507	F65#				57208-BZ050-	1		
1507 - 1607	F650				57208-BZ060-	1		
1507 - 1901	F653				57208-BZ060-	1		
1901 -	F65#				57208-BZ060-	1		
	+----------+							
	| 57301B | OUTRIGGER SUB-ASSY, NO.1 RH							
	+----------+							
1111 - 1507	F65#				57301-BZ100-	1		
1507 - 1607	F650				57301-BZ090-	1		
1507 - 1901	F653				57301-BZ090-	1		
1901 -	F65#				57301-BZ090-	1		
	+----------+							
	| 57302D | OUTRIGGER SUB-ASSY, NO.1 LH							
	+----------+							
1111 - 1507	F65#				57302-BZ100-	1		
1507 - 1607	F650				57302-BZ090-	1		
1507 - 1901	F653				57302-BZ090-	1		
1901 -	F65#				57302-BZ090-	1		
	+----------+							
	| 57335 | OUTRIGGER, NO.2 FRONT RH							
	+----------+							
1507 - 1607	F650				57335-BZ030-	1		
1507 - 1901	F653				57335-BZ030-	1		
1901 -	F65#				57335-BZ040-	1		

PROD_DATE	MODELS	SPEC CODE	DESCRIPTION	R/P	PART NUMBER	QYT	REV_REF FR	REV_REF TO
	57401C		MEMBER SUB-ASSY, FLOOR SIDE, INNER RH					
1111 - 1507	F65#				57401-BZ130-	1		
1507 - 1607	F650				57401-BZ310-	1		
1507 - 1901	F653				57401-BZ310-	1		
1901 -	F65#				57401-BZ310-	1		
	57402A		MEMBER SUB-ASSY, FLOOR SIDE, INNER LH					
1111 - 1507	F65#				57402-BZ190-	1		
1507 - 1607	F650				57402-BZ330-	1		
1507 - 1901	F653				57402-BZ330-	1		
1901 -	F65#				57402-BZ330-	1		
	57427A		REINFORCEMENT, FRONT FLOOR, NO.3 RH					
1507 - 1607	F650				57427-BZ070-	1		
1507 - 1901	F653				57427-BZ070-	1		
1901 -	F65#				57427-BZ070-	1		
	57428A		REINFORCEMENT, FRONT FLOOR, NO.3 LH					
1507 - 1607	F650				57428-BZ020-	1		
1507 - 1901	F653				57428-BZ020-	1		
1901 -	F65#				57428-BZ020-	1		
	58111		PAN, FRONT FLOOR					
1111 - 1507	F65#				58111-BZ090-	1		
1507 - 1607	F650				58111-BZ080-	1		
1507 - 1711	F653				58111-BZ080-	1		
1712 - 1901	F653				58111-BZ340-	1		
1901 -	F65#				58111-BZ340-	1		

FIG.58-51 FRONT FLOOR PANEL & FRONT FLOOR MEMBER

PROD_DATE	MODELS	SPEC CODE	DESCRIPTION	R/P	PART NUMBER	QYT	REV_REF FR	REV_REF TO
	58118E		BRACKET, JACK SET					
1111 - 1507	F65#				58793-BZ010-	1		
1507 - 1607	F650				58793-BZ010-	1		
1507 - 1901	F653				58793-BZ010-	1		
1901 -	F65#				58793-BZ010-	1		
	58131A		BRACKET, FRONT FLOOR HEAT INSULATOR, NO.1					
1507 - 1607	F650				17163-BZ020-	1		
1507 - 1901	F653				17163-BZ020-	1		
1901 -	F65#				17163-BZ020-	1		
	58132A		BRACKET, FRONT FLOOR HEAT INSULATOR, NO.2					
1507 - 1607	F650				17164-BZ030-	1		
1507 - 1901	F653				17164-BZ030-	1		
1901 -	F65#				17164-BZ030-	1		
	58171		REINFORCEMENT, PARKING BRAKE BASE					
1111 - 1507	F65#..5F				58107-BZ021-	1		
1111 - 1507	F651..E4AT				58107-BZ150-	1		
1507 - 1607	F650				58171-BZ030-	1		
1507 - 1711	F653				58171-BZ030-	1		
1712 - 1901	F653				58107-BZ120-	1		
1901 -	F65#				58107-BZ120-	1		
	58191		FOOTREST, FRONT FLOOR					
1111 - 1507	F651..E4AT				58191-BZ010-	1		
1507 - 1901	F653..E4AT				58191-BZ010-	1		
1901 -	F65#..E4AT				58191-BZ010-	1		

FIG.58-51 FRONT FLOOR PANEL & FRONT FLOOR MEMBER

PROD_DATE	MODELS	SPEC CODE	DESCRIPTION	R/P	PART NUMBER	QYT	REV_REF FR	REV_REF TO
	+----------+							
	| 58201B | PLUG, HOLE(FOR FLOOR PANEL)							
	+----------+							
1111 - 1507	F650				9004A-95051-	1		
1507 - 1607	F650..STD				9004A-95051-	1		
	+----------+							
	| 58213D | REINFORCEMENT, CENTER FLOOR PANEL							
	+----------+							
1111 - 1507	F65#				58213-BZ050-	1		
	+----------+							
	| 58214C | REINFORCEMENT, CENTER FLOOR PANEL, LH							
	+----------+							
1111 - 1507	F65#				58214-BZ050-	1		
	+----------+							
	| 58331A | PLUG, HOLE(FOR FRONT FLOOR CENTER FRONT PANEL)							
	+----------+							
1111 - 1507	F65#				90048-71195-	1		
1507 - 1601	F65#				90048-71195-	1		
1602 - 1901	F65#				9004A-95058-	1		
				#	(90048-71195-)	1		
1901 -	F65#				9004A-95058-	1		
				#	(90048-71195-)	1		
	+----------+							
	| 58791B | CARRIER, JAC							
	+----------+ K							
1111 - 1507	F65#				58791-BZ010-	1		
1507 - 1607	F650				58791-BZ060-	1		
1507 - 1901	F653				58791-BZ060-	1		
1901 -	F65#				58791-BZ060-	1		

FIG.58-52 REAR FLOOR PANEL & REAR FLOOR MEMBER

(1111-1507)

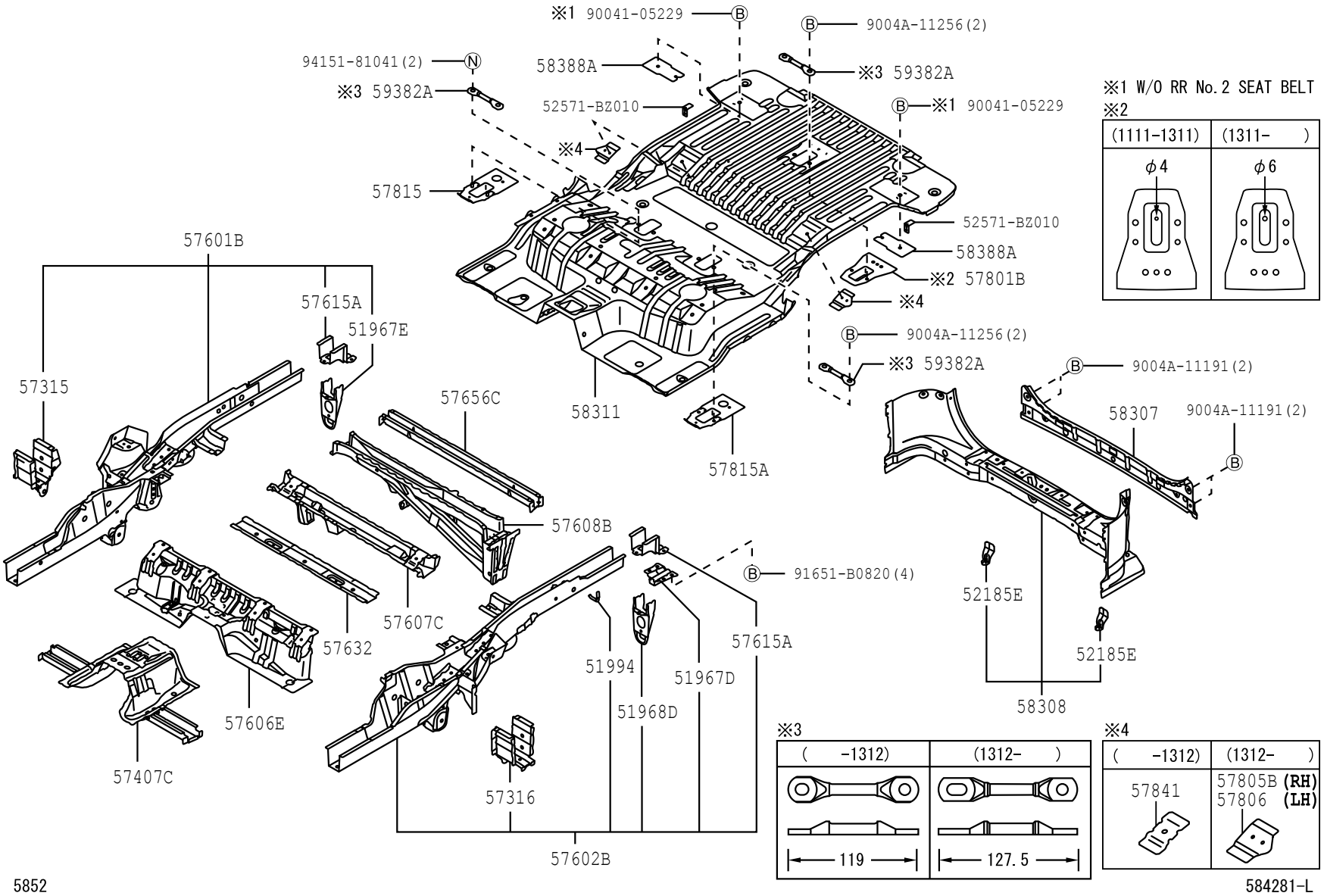

5852

584281-L

FIG.58-52 REAR FLOOR PANEL & REAR FLOOR MEMBER

(1507-)

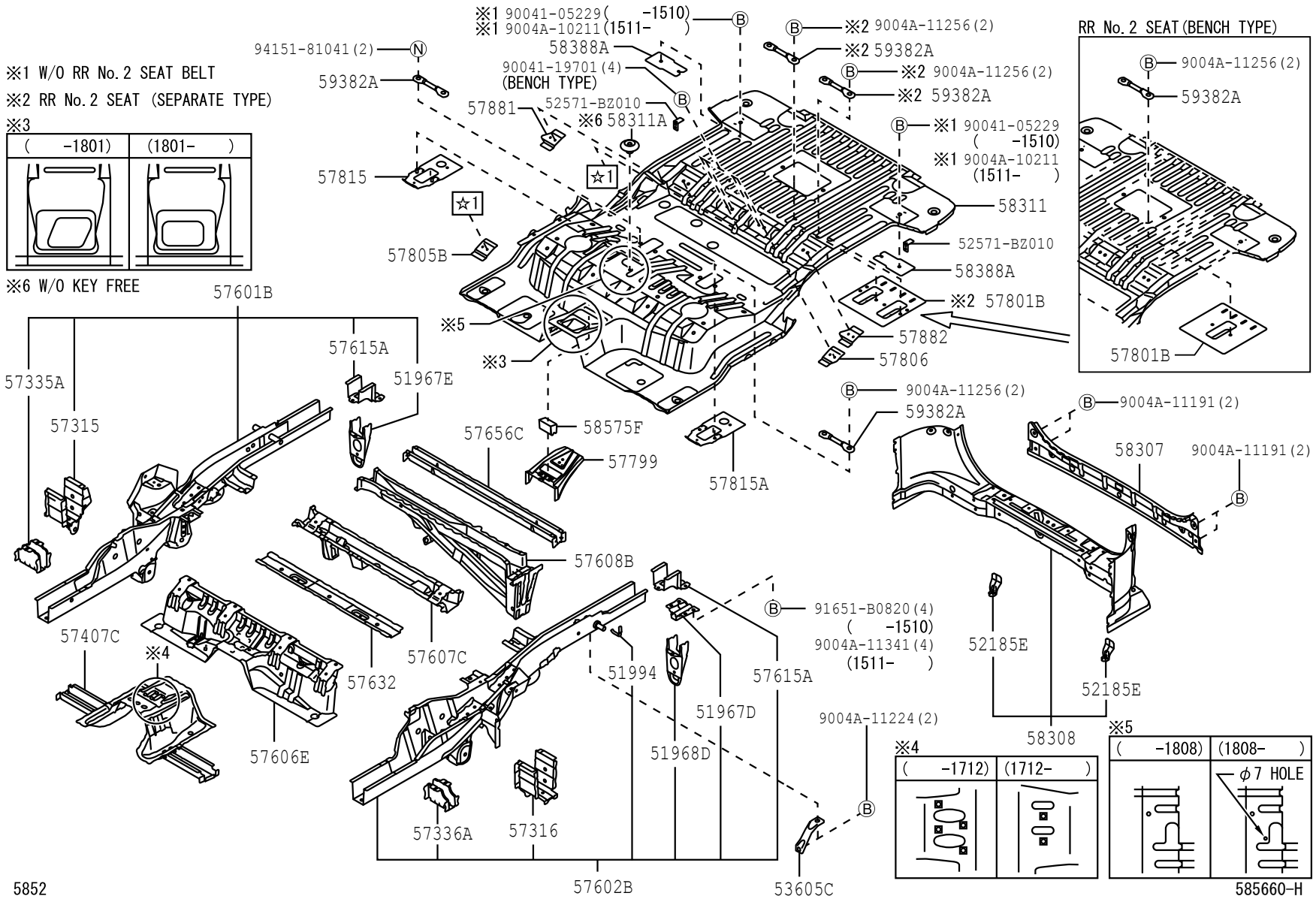

PROD_DATE	MODELS	SPEC CODE	DESCRIPTION	R/P	PART NUMBER	QYT	REV_REF FR	REV_REF TO
	+----------+							
	| 51967D | HOOK SUB-ASSY,REAR							
	+----------+							
1111 - 1507	F65#				51095-BZ010-	1		
1507 - 1607	F650				51095-BZ010-	1		
1507 - 1901	F653				51095-BZ010-	1		
1901 -	F65#				51095-BZ010-	1		
	+----------+							
	| 51967E | HOOK, TRANSPORT, REAR RH							
	+----------+							
1111 - 1507	F65#				51096-BZ010-	1		
1507 - 1607	F650				51096-BZ010-	1		
1507 - 1901	F653				51096-BZ010-	1		
1901 -	F65#				51096-BZ010-	1		
	+----------+							
	| 51968D | HOOK, TRANSPORT, REAR LH							
	+----------+							
1111 - 1507	F65#				51096-BZ010-	1		
1507 - 1607	F650				51096-BZ010-	1		
1507 - 1901	F653				51096-BZ010-	1		
1901 -	F65#				51096-BZ010-	1		
	+----------+							
	| 51994 | HANGER, EXHAUST PIPE, NO.4							
	+----------+							
1111 - 1507	F65#				51994-BZ010-	1		
1507 - 1607	F650				51994-BZ010-	1		
1507 - 1901	F653				51994-BZ010-	1		
1901 -	F65#				51994-BZ010-	1		
	+----------+							
	| 52185E | BRACKET, REAR BUMPER SIDE MOUNTIN, RH							
	+----------+							
1111 - 1507	F65#				52185-BZ080-	2		
1507 - 1607	F650				52185-BZ080-	2		
1507 - 1901	F653				52185-BZ080-	2		
1901 -	F65#				52185-BZ080-	2		

FIG.58-52 REAR FLOOR PANEL & REAR FLOOR MEMBER

PROD_DATE	MODELS	SPEC CODE	DESCRIPTION	R/P	PART NUMBER	QYT	REV_REF FR	REV_REF TO
	+----------+							
	| 53605C | BRACE SUB-ASSY, REAR FLOOR SIDE MEMBER							
	+----------+							
1507 - 1607	F650				53651-BZ020-	1		
1507 - 1901	F653				53651-BZ020-	1		
1901 -	F65#				53651-BZ020-	1		
	+----------+							
	| 57315 | OUTRIGGER, NO.3 RH							
	+----------+							
1111 - 1507	F65#				57315-BZ130-	1		
1507 - 1607	F650				57315-BZ150-	1		
1507 - 1901	F653				57315-BZ150-	1		
1901 -	F65#				57315-BZ170-	1		
	+----------+							
	| 57316 | OUTRIGGER, NO.3 LH							
	+----------+							
1111 - 1507	F65#				57316-BZ120-	1		
1507 - 1607	F650				57316-BZ140-	1		
1507 - 1901	F653				57316-BZ140-	1		
1901 -	F65#				57316-BZ160-	1		
	+----------+							
	| 57335A | OUTRIGGER, NO.2 FRONT RH							
	+----------+							
1507 - 1607	F650				57347-BZ010-	1		
1507 - 1901	F653				57347-BZ010-	1		
1901 -	F65#				57305-BZ010-	1		
	+----------+							
	| 57336A | OUTRIGGER, NO.2 FRONT LH							
	+----------+							
1507 - 1607	F650				57348-BZ010-	1		
1507 - 1901	F653				57348-BZ010-	1		
1901 -	F65#				57306-BZ010-	1		
	+----------+							
	| 57407C | MEMBER SUB-ASSY, CENTER FLOOR CROSS, NO.1							
	+----------+							
1111 - 1507	F65#				57407-BZ040-	1		

PROD_DATE	MODELS	SPEC CODE	DESCRIPTION	R/P	PART NUMBER	QYT	REV_REF FR	REV_REF TO
	+----------+							
	| 57407C | MEMBER SUB-ASSY, CENTER FLOOR CROSS, NO.1							
	CONTINUED--+							
1507 - 1607	F650				57407-BZ050-	1		
1507 - 1712	F653				57407-BZ050-	1		
1712 - 1901	F653				57407-BZ051-	1		
1901 -	F65#				57407-BZ051-	1		
	+----------+							
	| 57601B | MEMBER SUB-ASSY, REAR FLOOR SIDE, FRONT R							
	+----------+ H							
1111 - 1507	F65#				57601-BZ191-	1		
1507 - 1607	F650				57601-BZ300-	1		
1507 - 1901	F653				57601-BZ300-	1		
1901 -	F65#				57601-BZ530-	1		
	+----------+							
	| 57602B | MEMBER SUB-ASSY, REAR FLOOR SIDE, FRONT L							
	+----------+ H							
1111 - 1507	F65#				57602-BZ201-	1		
1507 - 1607	F650				57602-BZ290-	1		
1507 - 1901	F653				57602-BZ290-	1		
1901 -	F65#				57602-BZ510-	1		
	+----------+							
	| 57606E | MEMBER SUB-ASSY, REAR FLOOR CROSS, NO.2							
	+----------+							
1111 - 1507	F65#				57606-BZ130-	1		
1507 - 1607	F650				57606-BZ160-	1		
1507 - 1901	F653				57606-BZ160-	1		
1901 -	F65#				57606-BZ160-	1		
	+----------+							
	| 57607C | MEMBER SUB-ASSY, REAR FLOOR CROSS, NO.3							
	+----------+							
1111 - 1507	F65#				57607-BZ010-	1		
1507 - 1607	F650				57607-BZ010-	1		
1507 - 1901	F653				57607-BZ010-	1		
1901 -	F65#				57607-BZ010-	1		

FIG.58-52 REAR FLOOR PANEL & REAR FLOOR MEMBER

PROD_DATE	MODELS	SPEC CODE	DESCRIPTION	R/P	PART NUMBER	QYT	REV_REF FR	REV_REF TO
	+----------+							
	| 57608B | MEMBER SUB-ASSY, REAR FLOOR CROSS, NO.4							
	+----------+							
1111 - 1507	F65#				57608-BZ170-	1		
1507 - 1607	F650				57608-BZ240-	1		
1507 - 1901	F653				57608-BZ240-	1		
1901 -	F654				57608-BZ230-	1		
1901 -	F653				57608-BZ240-	1		
	+----------+							
	| 57615A | MEMBER, REAR FLOOR SIDE, REAR RH							
	+----------+							
1111 - 1507	F65#				57615-BZ010-	2		
1507 - 1607	F650				57615-BZ010-	2		
1507 - 1901	F653				57615-BZ010-	2		
1901 -	F65#				57615-BZ010-	2		
	+----------+							
	| 57632 | MEMBER, REAR FLOOR, CENTER NO.1							
	+----------+							
1111 - 1507	F65#				57632-BZ010-	1		
1507 - 1607	F650				57632-BZ010-	1		
1507 - 1901	F653				57632-BZ010-	1		
1901 -	F65#				57632-BZ010-	1		
	+----------+							
	| 57656C | MEMBER, REAR FLOOR CROOS, NO.5							
	+----------+							
1111 - 1507	F65#				57656-BZ010-	1		
1507 - 1607	F650				57656-BZ010-	1		
1507 - 1901	F653				57656-BZ010-	1		
1901 -	F65#				57656-BZ010-	1		
	+----------+							
	| 57799 | GUSSET, REAR FLOOR CROSSMEMBER							
	+----------+							
1507 - 1607	F650				57799-BZ010-	1		
1507 - 1901	F653				57799-BZ010-	1		
1901 -	F65#				57799-BZ010-	1		

PROD_DATE	MODELS	SPEC CODE	DESCRIPTION	R/P	PART NUMBER	QYT	REV_REF FR	REV_REF TO
	57801B		REINFORCEMENT SUB-ASSY, REAR NO.1 SEAT LEG, FRONT NO.1					
1111 - 1311	F65#				57801-BZ010-	1		
1311 - 1507	F65#				57801-BZ011-	1		
1507 - 1607	F650				57801-BZ050-	1		
1507 - 1901	F653				57801-BZ060-	1		
1901 -	F65#				57801-BZ060-	1		
	57805B		REINFORCEMENT SUB-ASSY, BELT ANCHOR, RH					
1312 - 1507	F65#				57805-BZ070-	1		
1507 - 1607	F650				57805-BZ080-	1		
1507 - 1901	F653				57805-BZ080-	1		
1901 -	F65#				57805-BZ080-	1		
	57806		REINFORCEMENT SUB-ASSY, BELT ANCHOR, LH					
1312 - 1507	F65#				57806-BZ050-	1		
1507 - 1607	F650				57806-BZ060-	1		
1507 - 1901	F653				57806-BZ060-	1		
1901 -	F65#				57806-BZ060-	1		
	57815		REINFORCEMENT, BELT ANCHOR, NO.1					
1111 - 1507	F65#				57815-BZ021-	1		
1507 - 1607	F650				57815-BZ021-	1		
1507 - 1901	F653				57815-BZ021-	1		
1901 -	F65#				57815-BZ021-	1		
	57815A		REINFORCEMENT, BELT ANCHOR, RH					
1111 - 1507	F65#				57807-BZ011-	1		
1507 - 1607	F650				57807-BZ011-	1		
1507 - 1901	F653				57807-BZ011-	1		

FIG.58-52 REAR FLOOR PANEL & REAR FLOOR MEMBER

PROD_DATE	MODELS	SPEC CODE	DESCRIPTION	R/P	PART NUMBER	QYT	REV_REF FR	REV_REF TO
	57815A		REINFORCEMENT, BELT ANCHOR, RH CONTINUED--+					
1901 -	F65#				57807-BZ011-	1		
	57841		REINFORCEMENT, REAR NO.2 SEAT LEG, FRONT RH					
1111 - 1312	F65#				57841-BZ040-	2		
	57881		REINFORCEMENT, BELT ANCHOR, NO.3					
1507 - 1607	F650				57805-BZ090-	1		
1507 - 1901	F653				57805-BZ090-	1		
1901 -	F65#				57805-BZ090-	1		
	57882		REINFORCEMENT, BELT ANCHOR, NO.4					
1507 - 1607	F650				57806-BZ070-	1		
1507 - 1901	F653				57806-BZ070-	1		
1901 -	F65#				57806-BZ070-	1		
	58307		PANEL SUB-ASSY, BODY LOWER BACK					
1111 - 1507	F65#				58377-BZ020-	1		
1507 - 1607	F650				58377-BZ020-	1		
1507 - 1807	F653				58377-BZ020-	1		
1808 - 1901	F653				58377-BZ021-	1		
1901 -	F65#				58377-BZ021-	1		
	58308		PANEL SUB-ASSY, BODY LOWER BACK, INNER					
1111 - 1507	F651..LO				58308-BZ120-	1		
1111 - 1507	F650				58308-BZ130-	1		
1111 - 1507	F651..STD				58308-BZ130-	1		
1507 - 1607	F650				58308-BZ130-	1		
1507 - 1901	F653..STD				58308-BZ120-	1		

PROD_DATE	MODELS	SPEC CODE	DESCRIPTION	R/P	PART NUMBER	QYT	REV_REF FR	REV_REF TO
	+----------+							
	| 58308 | PANEL SUB-ASSY, BODY LOWER BACK, INNER							
	CONTINUED--+							
1507 - 1901	F653..LO				58308-BZ130-	1		
1901 -	F65#..STD				58308-BZ120-	1		
1901 -	F653..LO				58308-BZ130-	1		
	+----------+							
	| 58311 | PAN, REAR FLOOR							
	+----------+							
1111 - 1312	F651..LO				58311-BZ170-	1		
1111 - 1312	F650				58311-BZ250-	1		
1111 - 1312	F651..STD				58311-BZ250-	1		
1312 - 1507	F651..LO				58311-BZ290-	1		
1312 - 1507	F650				58311-BZ340-	1		
1312 - 1507	F651..STD				58311-BZ340-	1		
1507 - 1607	F650				58311-BZ300-	1		
1507 - 1712	F653..LO				58311-BZ300-	1		
1507 - 1712	F653..STD				58311-BZ310-	1		
1712 - 1901	F653..LO				58311-BZ330-	1		
1712 - 1901	F653..STD				58311-BZ390-	1		
1901 -	F653..LO				58311-BZ331-	1		
1901 -	F65#..STD				58311-BZ391-	1		
	+----------+							
	| 58311A | PLUG, HOLE(FOR FLOOR PAN)							
	+----------+							
1812 - 1901	F653				90048-71320-	1		
1901 -	F65#				90048-71320-	1		
	+----------+							
	| 58388A | BRACKET,REAR FLOOR PLATE							
	+----------+							
1111 - 1507	F65#				72611-BZ030-	2		
1507 - 1607	F650		W/O ID MARK		72611-BZ030-	2		
1507 - 1901	F653		W/O ID MARK		72611-BZ030-	2		

FIG.58-52 REAR FLOOR PANEL & REAR FLOOR MEMBER

PROD_DATE	MODELS	SPEC CODE	DESCRIPTION	R/P	PART NUMBER	QYT	REV_REF FR	REV_REF TO
	+----------+							
	| 58388A | BRACKET,REAR FLOOR PLATE							
	CONTINUED--+							
1709 - 1901	F653		ID MARK =T		72611-BZ070-	2		
1901 -	F65#		W/O ID MARK		72611-BZ030-	2		
1901 -	F65#		ID MARK =T		72611-BZ070-	2		
	+----------+							
	| 58575F | PAD, REAR FLOOR							
	+----------+							
1507 - 1607	F650				58579-BZ020-	1		
1507 - 1901	F653				58579-BZ020-	1		
1901 -	F65#				58579-BZ020-	1		
	+----------+							
	| 59382A | STRIKER, REAR SEAT LEG LOCK							
	+----------+							
1111 - 1312	F65#				72692-BZ020-	2		
1312 - 1507	F65#				72692-BZ030-	2		
1507 - 1607	F650				72692-BZ030-	1		
1507 - 1607	F650..STD		DK.GRAY(TRIM1#)		72692-BZ040-B0	2		
1507 - 1901	F653				72692-BZ030-	2		
1507 - 1901	F653		DK.GRAY(TRIM4#)		72692-BZ040-B0	2		
1507 - 1901	F650..LO		DK.GRAY(TRIM4#)		72692-BZ040-B0	2		
1901 -	F65#				72692-BZ030-	2		

FIG.58-53 FLOOR INSULATOR

(1507-)

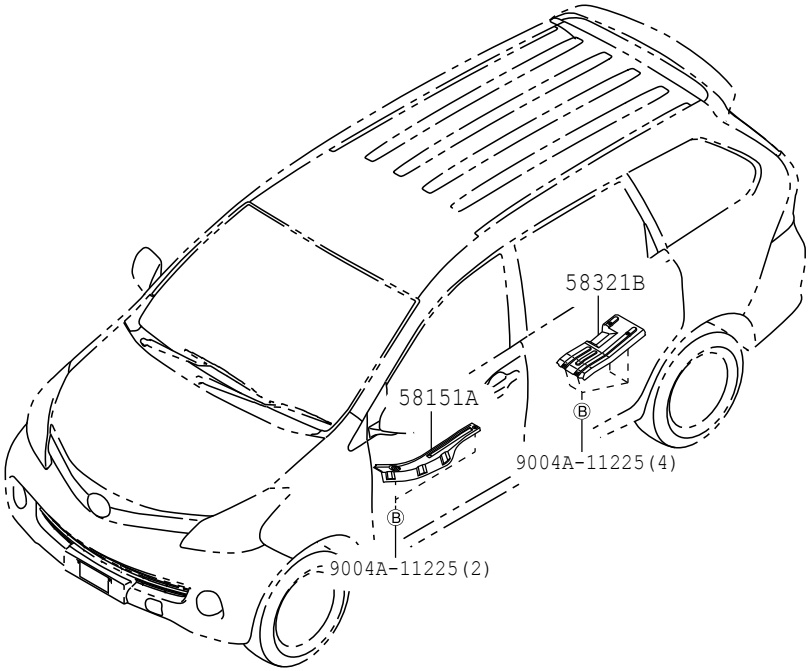

5853

585206

FIG.58-53 FLOOR INSULATOR

PROD_DATE	MODELS	SPEC CODE	DESCRIPTION	R/P	PART NUMBER	QYT	REV_REF FR	REV_REF TO
	+----------+							
	| 58151A | INSULATOR, FLOOR HEAT, NO.1							
	+----------+							
1507 - 1607	F650				58151-BZ010-	1		
1507 - 1901	F653				58151-BZ010-	1		
1901 -	F65#				58151-BZ010-	1		
	+----------+							
	| 58321B | INSULATOR, REAR FLOOR HEAT, NO.1							
	+----------+							
1507 - 1607	F650				58321-BZ040-	1		
1507 - 1901	F653				58321-BZ040-	1		
1901 -	F65#				58321-BZ040-	1		

FIG.58-54 FLOOR MAT & SILENCER PAD

(1111-1507)

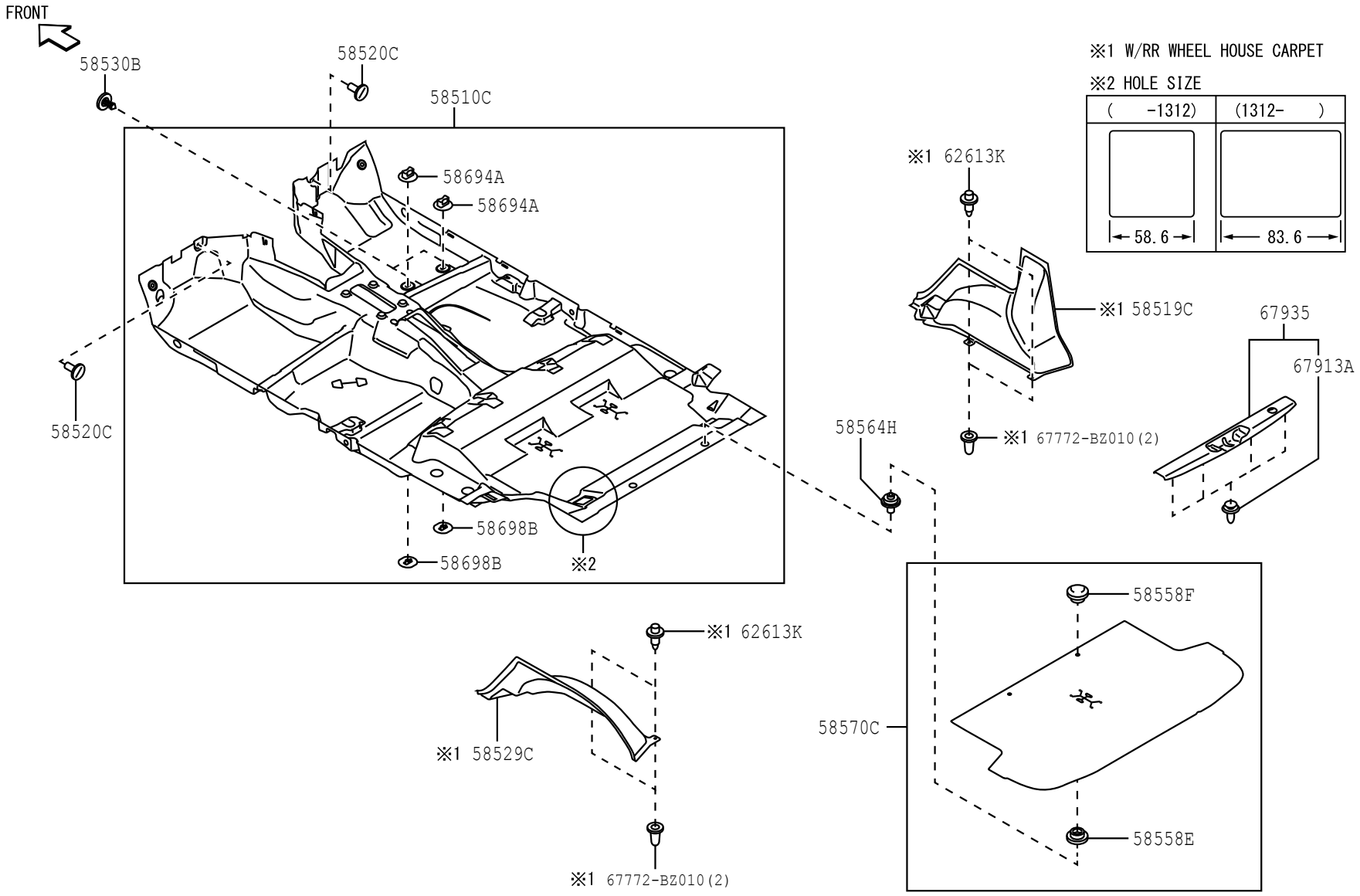

5854

584275-B

FIG.58-54 FLOOR MAT & SILENCER PAD

(1507-1607)F650 ; (1507-1901)F653

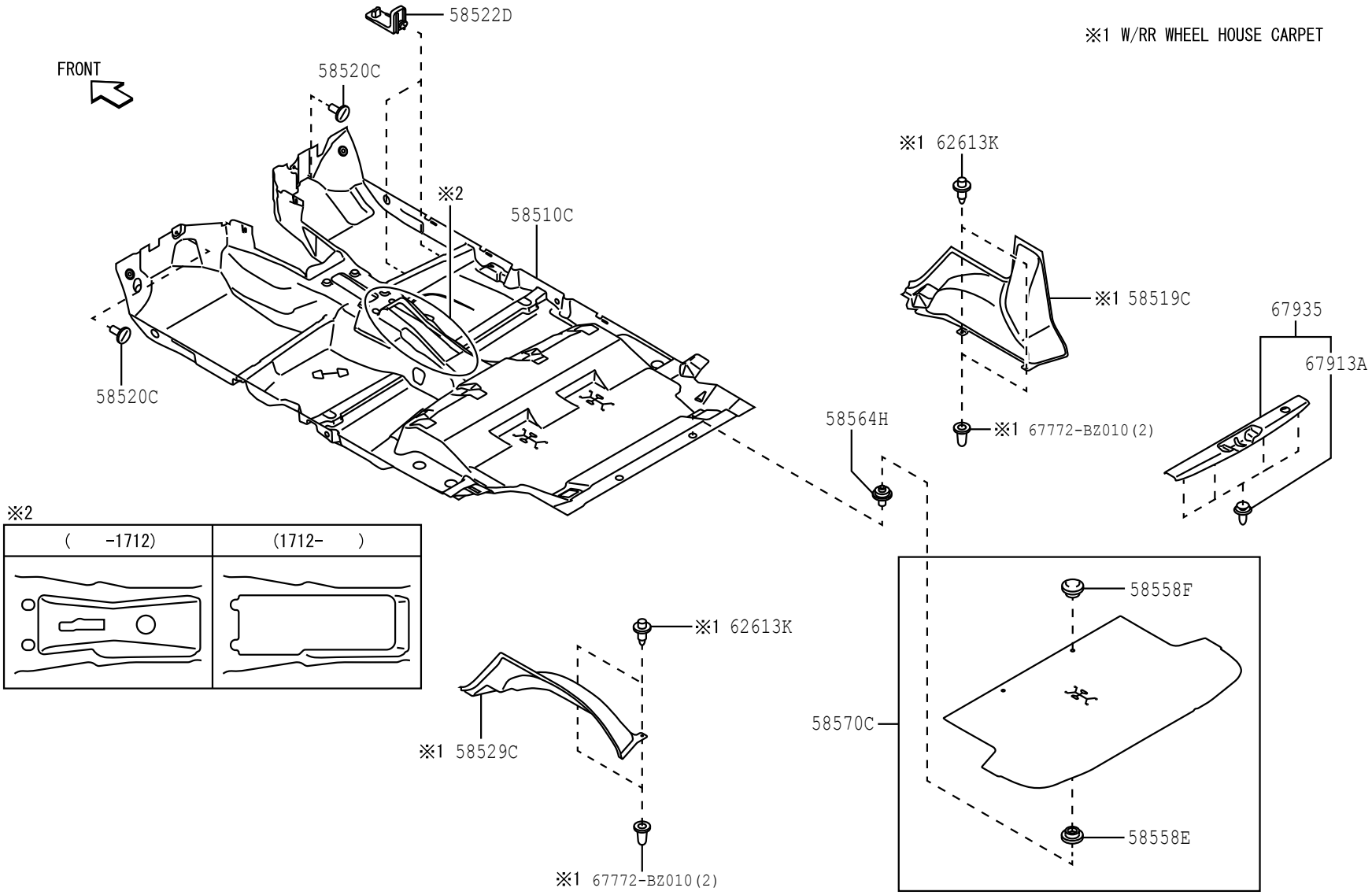

5854

585653-B

FIG.58-54 FLOOR MAT & SILENCER PAD

(1901-)

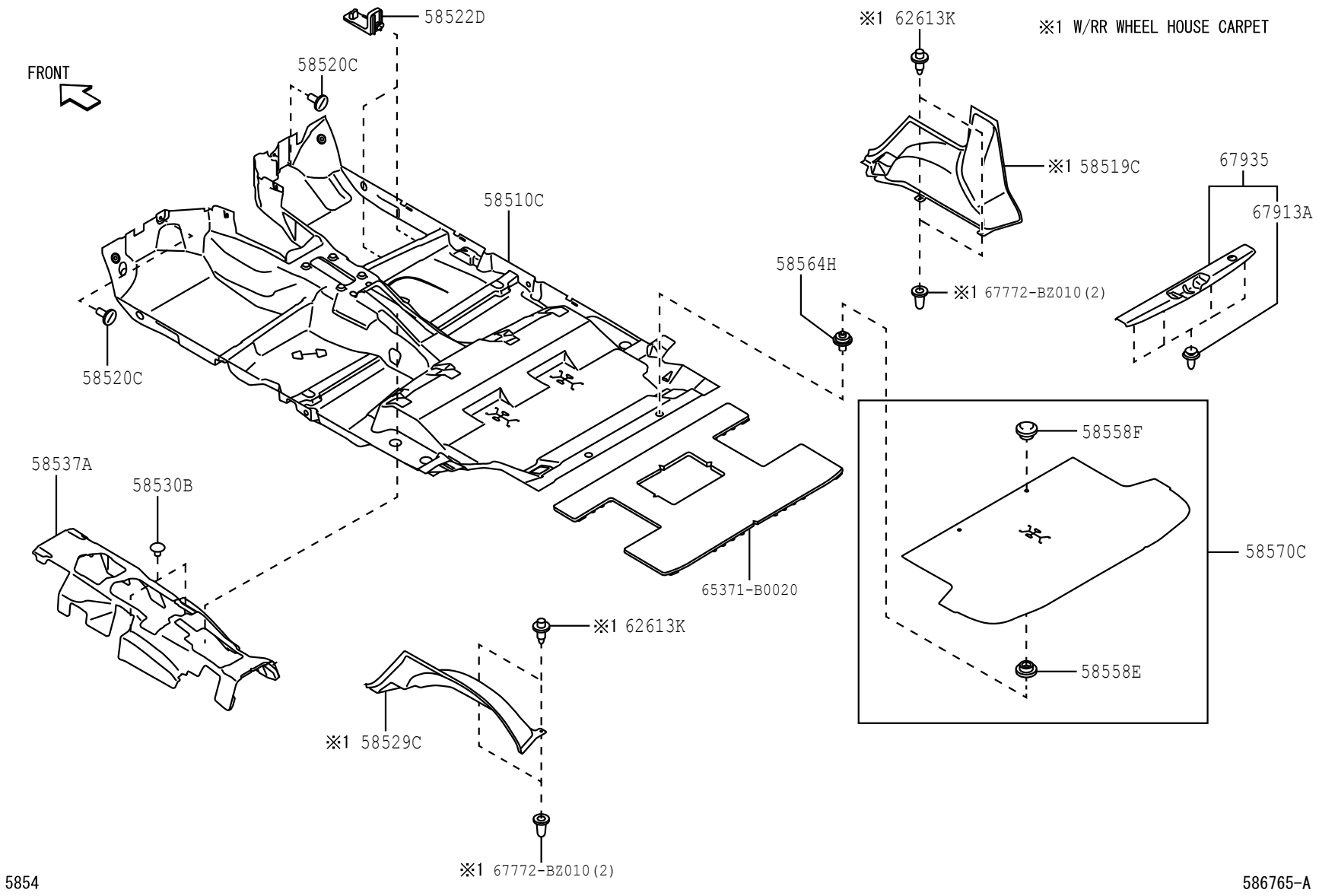

PROD_DATE	MODELS	SPEC CODE	DESCRIPTION	R/P	PART NUMBER	QYT	REV_REF FR	REV_REF TO
	+----------+							
	| 58510C | CARPET ASSY, FRONT FLOOR, FRONT							
	+----------+							
1111 - 1305	F650..STD		BLACK(TRIM1#)		58510-BZA70-C0	1		
1305 - 1306	F650..STD		BLACK(TRIM1#),W/O RR CONSOLE BOX		58510-BZA71-C0	1		
1111 - 1312	F651..E4AT		BLACK(TRIM4#)		58510-BZ850-C0	1		
1111 - 1312	F650..LO		BLACK(TRIM4#),W/RR CONSOLE BOX		58510-BZ860-C0	1		
1111 - 1312	F651..STD		BLACK(TRIM4#),W/RR CONSOLE BOX		58510-BZ860-C0	1		
1111 - 1312	F651..LO..5F		BLACK(TRIM4#)		58510-BZ870-C0	1		
1306 - 1312	F650..STD		BLACK(TRIM1#),W/RR CONSOLE BOX		58510-BZ860-C0	1		
1312 - 1507	F651..E4AT		BLACK(TRIM4#)		58510-BZ611-C0	1		
1312 - 1507	F650..STD		BLACK(TRIM1#),W/RR CONSOLE BOX		58510-BZ861-C0	1		
1312 - 1507	F650..LO		BLACK(TRIM4#),W/RR CONSOLE BOX		58510-BZ861-C0	1		
1312 - 1507	F651..STD		BLACK(TRIM4#),W/RR CONSOLE BOX		58510-BZ861-C0	1		
1312 - 1507	F651..LO..5F		BLACK(TRIM4#)		58510-BZB01-C0	1		
1312 - 1507	F650..STD		BLACK(TRIM1#)		58510-BZD01-C0	1		
1312 - 1507	F650..LO		BLACK(TRIM4#)		58510-BZD01-C0	1		
1312 - 1507	F651..STD		BLACK(TRIM4#)		58510-BZD01-C0	1		
1507 - 1607	F650..STD		BLACK(TRIM1#)		58510-BZG90-C0	1		
1507 - 1607	F650..LO		BLACK(TRIM4#)		58510-BZG90-C0	1		
1507 - 1712	F653..STD..E4AT		BLACK(TRIM4#)		58510-BZE50-C0	1		
1507 - 1712	F653..STD..5F		BLACK(TRIM4#)		58510-BZE60-C0	1		
1507 - 1712	F653..LO..E4AT		BLACK(TRIM4#)		58510-BZE70-C0	1		
1507 - 1712	F653..LO..5F		BLACK(TRIM4#)		58510-BZE80-C0	1		
1712 - 1801	F653..STD..E4AT		BLACK(TRIM4#)		58510-BZE51-C0	1		

FIG.58-54 FLOOR MAT & SILENCER PAD

PROD_DATE	MODELS	SPEC CODE	DESCRIPTION	R/P	PART NUMBER	QYT	REV_REF FR	REV_REF TO
	+----------+							
	| 58510C | CARPET ASSY, FRONT FLOOR, FRONT							
	CONTINUED--+							
1712 - 1801	F653..STD..5F		BLACK(TRIM4#)		58510-BZE61-C0	1		
1712 - 1801	F653..LO..E4AT		BLACK(TRIM4#)		58510-BZE71-C0	1		
1712 - 1801	F653..LO..5F		BLACK(TRIM4#)		58510-BZE81-C0	1		
1802 - 1901	F653..STD..E4AT		BLACK(TRIM4#)		58510-BZE52-C0	1		
1802 - 1901	F653..STD..5F		BLACK(TRIM4#)		58510-BZE62-C0	1		
1802 - 1901	F653..LO..E4AT		BLACK(TRIM4#)		58510-BZE72-C0	1		
1802 - 1901	F653..LO..5F		BLACK(TRIM4#)		58510-BZE82-C0	1		
1901 -	F65#..STD..E4AT		BLACK(TRIM4#)		58510-BZQ80-C0	1		
1901 -	F65#..STD..5F		BLACK(TRIM4#)		58510-BZQ90-C0	1		
1901 -	F653..LO..E4AT		BLACK(TRIM4#)		58510-BZR00-C0	1		
1901 -	F653..LO..5F		BLACK(TRIM4#)		58510-BZR10-C0	1		
	+----------+							
	| 58519C | CARPET, REAR WHEEL HOUSE, RH							
	+----------+							
1111 - 1507	F650..STD		BLACK(TRIM1#)		58580-BZ090-C0	1		
1111 - 1507	F650..LO		BLACK(TRIM4#)		58580-BZ090-C0	1		
1111 - 1507	F651..STD		BLACK(TRIM4#)		58580-BZ090-C0	1		
1507 - 1607	F650..STD		BLACK(TRIM1#)		58580-BZ090-C0	1		
1507 - 1607	F650..LO		BLACK(TRIM4#)		58580-BZ090-C0	1		
1507 - 1901	F653..LO		BLACK(TRIM4#)		58580-BZ090-C0	1		
1901 -	F653..LO		BLACK(TRIM4#)		58580-BZ090-C0	1		
	+----------+							
	| 58520C | CLIP(FOR FRONT FLOOR CARPET)							
	+----------+							
1111 - 1507	F650..STD		DK.GRAY(TRIM1#)		9004A-46131-B0	2		
1111 - 1507	F651		DK.GRAY(TRIM4#)		9004A-46131-B0	2		
1111 - 1507	F650..LO		DK.GRAY(TRIM4#)		9004A-46131-B0	2		
1507 - 1607	F650..STD		DK.GRAY(TRIM1#)		9004A-46131-B0	2		
1507 - 1804	F653		DK.GRAY(TRIM4#)		9004A-46131-B0	2		

PROD_DATE	MODELS	SPEC CODE	DESCRIPTION	R/P	PART NUMBER	QYT	REV_REF FR	REV_REF TO
	+----------+							
	| 58520C | CLIP(FOR FRONT FLOOR CARPET)							
	CONTINUED--+							
1507 - 1804	F650..LO		DK.GRAY(TRIM4#)		9004A-46131-B0	2		
1804 - 1901	F653		BLACK(TRIM4#)		9004A-46131-C1	2		
1901 -	F65#		BLACK(TRIM4#)		9004A-46131-C1	2		
	+----------+							
	| 58522D | HOOK, FLOOR CARPET, NO.2							
	+----------+							
1507 - 1901	F65#				58522-52030-	2		
1901 -	F65#				58522-52030-	2		
	+----------+							
	| 58529C | CARPET, REAR WHEEL HOUSE, LH							
	+----------+							
1111 - 1507	F650..STD		BLACK(TRIM1#)		58590-BZ070-C0	1		
1111 - 1507	F650..LO		BLACK(TRIM4#)		58590-BZ070-C0	1		
1111 - 1507	F651..STD		BLACK(TRIM4#)		58590-BZ070-C0	1		
1507 - 1607	F650..STD		BLACK(TRIM1#)		58590-BZ070-C0	1		
1507 - 1607	F650..LO		BLACK(TRIM4#)		58590-BZ070-C0	1		
1507 - 1901	F653..LO		BLACK(TRIM4#)		58590-BZ070-C0	1		
1901 -	F653..LO		BLACK(TRIM4#)		58590-BZ070-C0	1		
	+----------+							
	| 58530B | CLIP(FOR FRONT FLOOR CARPET)							
	+----------+							
1111 - 1507	F65#		BLACK		90467-07049-C0	2		
1901 -	F65#		LT.GRAY		90044-67298-B0	2		
	+----------+							
	| 58537A | SILENCER, FRONT FLOOR, NO.1							
	+----------+							
1901 -	F65#				58563-B0010-	1		
	+----------+							
	| 58558E | FASTENER, PI							
	+----------+ LE							
1111 - 1507	F65#				58558-87209-	2		
1507 - 1901	F65#				58558-87209-	2		
1901 -	F65#				58558-87209-	2		

FIG.58-54 FLOOR MAT & SILENCER PAD

PROD_DATE	MODELS	SPEC CODE	DESCRIPTION	R/P	PART NUMBER	QYT	REV_REF FR	REV_REF TO
	+----------+							
	| 58558F | FASTENER, PILE, UPR							
	+----------+							
1111 - 1507	F650..STD		DK.GRAY(TRIM1#)		58558-87502-B2	2		
1111 - 1507	F651		DK.GRAY(TRIM4#)		58558-87502-B2	2		
1111 - 1507	F650..LO		DK.GRAY(TRIM4#)		58558-87502-B2	2		
1507 - 1607	F650..STD		DK.GRAY(TRIM1#)		58558-87502-B2	2		
1507 - 1901	F653		DK.GRAY(TRIM4#)		58558-87502-B2	2		
1507 - 1901	F650..LO		DK.GRAY(TRIM4#)		58558-87502-B2	2		
1901 -	F65#		DK.GRAY(TRIM4#)		58558-87502-B2	2		
	+----------+							
	| 58564H | CLIP(FOR REAR FLOOR CARPET)							
	+----------+							
1111 - 1507	F65#				9004A-53002-	2		
1507 - 1901	F65#				9004A-53002-	2		
1901 -	F65#				9004A-53002-	2		
	+----------+							
	| 58570C | CARPET ASSY, REAR FLOOR							
	+----------+							
1111 - 1305	F650..STD		-(TRIM1#)		58570-BZ190-C1	1		
1111 - 1507	F651..LO		-(TRIM4#)		58570-BZ200-C1	1		
1111 - 1507	F650..LO		-(TRIM4#)		58570-BZ260-C1	1		
1111 - 1507	F651..STD		-(TRIM4#)		58570-BZ260-C1	1		
1305 - 1507	F650..STD		BLACK(TRIM1#)		58570-BZ191-C1	1		
1507 - 1607	F650..LO		DK.GRAY(TRIM4#)		58570-BZ290-C0	1		
1507 - 1607	F650..STD		DK.GRAY(TRIM1#)		58570-BZ310-C0	1		
1507 - 1901	F653..LO		DK.GRAY(TRIM4#)		58570-BZ300-C0	1		
1507 - 1901	F653..STD		DK.GRAY(TRIM4#)		58570-BZ320-C0	1		
1901 -	F653..LO		DK.GRAY(TRIM4#)		58570-BZ380-C0	1		
1901 -	F65#..STD		DK.GRAY(TRIM4#)		58570-BZ400-C0	1		

PROD_DATE	MODELS	SPEC CODE	DESCRIPTION	R/P	PART NUMBER	QYT	REV_REF FR	REV_REF TO
	+----------+							
	| 58694A | PLATE, MAT SET, UPPER							
	+----------+							
1111 - 1507	F65#				58694-BZ010-	2		
	+----------+							
	| 58698B | PLATE, MAT SET, LOWER							
	+----------+							
1111 - 1507	F65#				58698-BZ010-	2		
	+----------+							
	| 62613K | CLIP (FOR QUARTER WHEEL HOUSE COVER)							
	+----------+							
1111 - 1204	F650..LO		DK.GRAY(TRIM42)		9004A-46132-B0	4		
1111 - 1204	F651..STD		DK.GRAY(TRIM42)		9004A-46132-B0	4		
1111 - 1204	F650..LO		-(TRIM42)		9004A-46132-E1	4		
1111 - 1204	F651..STD		-(TRIM42)		9004A-46132-E1	4		
1111 - 1507	F650..STD		DK.GRAY(TRIM1#)		9004A-46132-B0	4		
1204 - 1507	F650..LO		DK.GRAY(TRIM4#)		9004A-46132-B0	4		
1204 - 1507	F651..STD		DK.GRAY(TRIM4#)		9004A-46132-B0	4		
1507 - 1607	F650..STD		DK.GRAY(TRIM1#)		9004A-46132-B0	4		
1507 - 1607	F650..LO		DK.GRAY(TRIM4#)		9004A-46132-B0	4		
1507 - 1804	F653..LO		DK.GRAY(TRIM4#)		9004A-46132-B0	4		
1804 - 1901	F653..LO		BLACK(TRIM4#)		9004A-46132-C0	4		
1901 -	F653..LO		BLACK(TRIM4#)		9004A-46132-C0	4		
	+----------+							
	| 67913A | CLIP(FOR SCUFF PLATE)							
	+----------+							
1111 - 1507	F65#				9004A-46275-	4		
1507 - 1901	F65#				9004A-46275-	4		
1901 -	F65#				9004A-46275-	4		
	+----------+							
	| 67935 | PLATE, BACK DOOR SCUFF							
	+----------+							
1111 - 1507	F650..STD		DK.GRAY(TRIM1#)		67935-BZ060-B0	1		
1111 - 1507	F650..LO		-(TRIM4#)		67935-BZ060-E0	1		
1111 - 1507	F651..STD		-(TRIM4#)		67935-BZ060-E0	1		

FIG.58-54 FLOOR MAT & SILENCER PAD

PROD_DATE	MODELS	SPEC CODE	DESCRIPTION	R/P	PART NUMBER	QYT	REV_REF FR	REV_REF TO
	+----------+							
	| 67935 | PLATE, BACK DOOR SCUFF							
	CONTINUED--+							
1111 - 1507	F651..LO		-(TRIM4#)		67935-BZ070-E0	1		
1507 - 1607	F650..STD		DK.GRAY(TRIM1#)		67935-BZ060-B0	1		
1507 - 1901	F65#..LO		DK.GRAY(TRIM4#)		67935-BZ060-B0	1		
1507 - 1901	F653..STD		DK.GRAY(TRIM4#)		67935-BZ070-B0	1		
1901 -	F653..LO		LINEN BEIGE(TRIM4#)		67935-BZ060-E1	1		
1901 -	F65#..STD		LINEN BEIGE(TRIM4#)		67935-BZ070-E1	1		

FIG.58-55 CONSOLE BOX & BRACKET

(1111-1507)STD

W/O RR CONSOLE

W/O RR CONSOLE

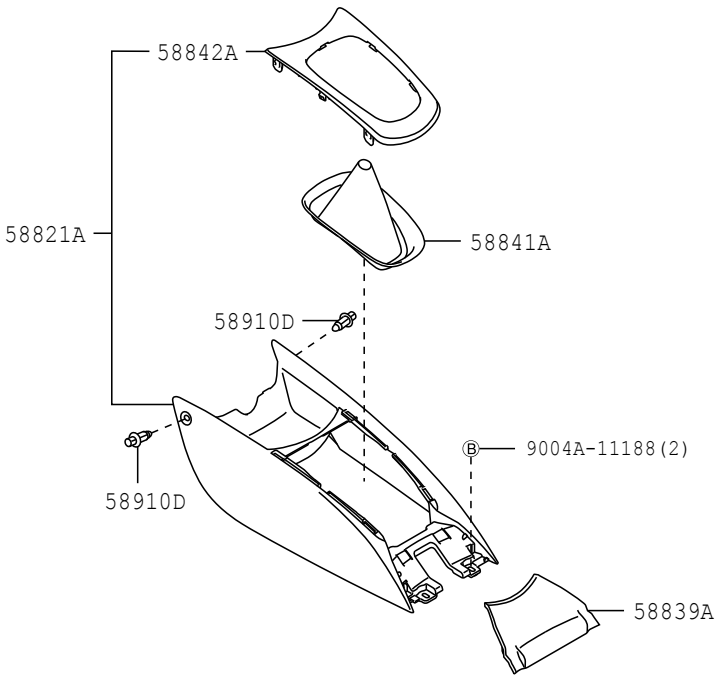

5855 584276

FIG.58-55 CONSOLE BOX & BRACKET

(1111-1507)LO

W/ RR CONSOLE

W/RR CONSOLE

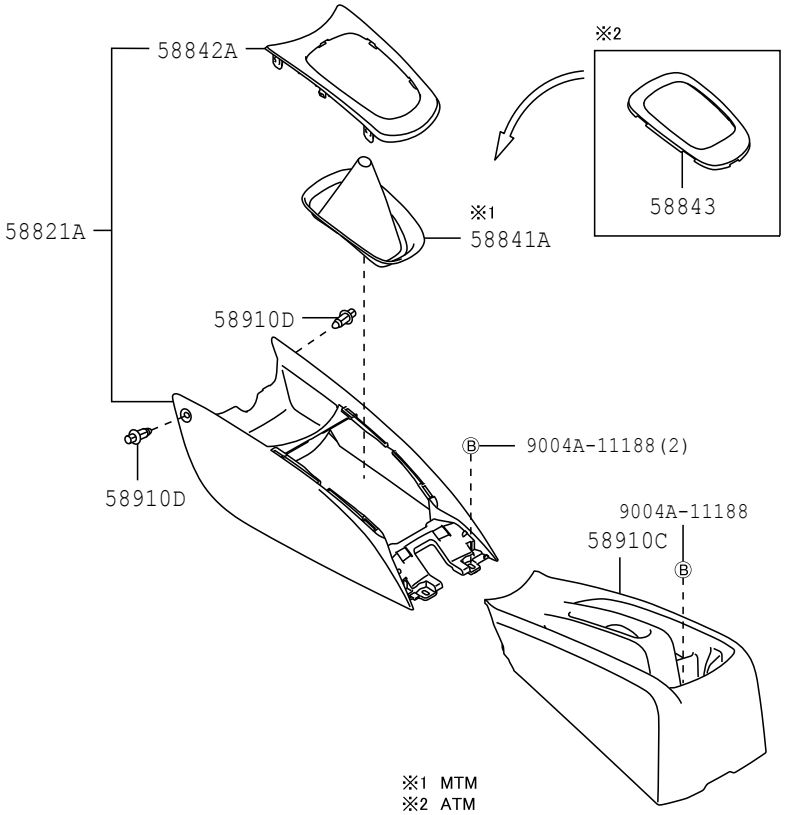

5855 584277

FIG.58-55 CONSOLE BOX & BRACKET

(1507-1712)

W/RR CONSOLE

W/RR CONSOLE

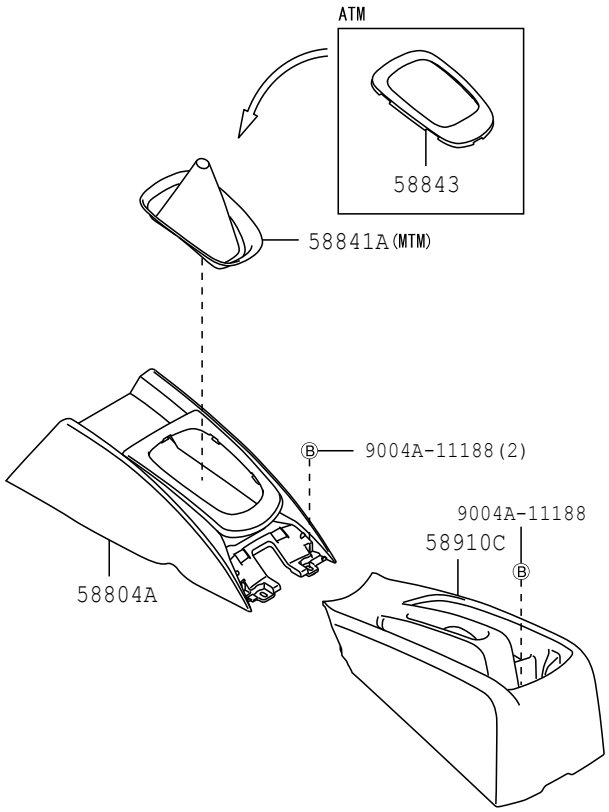

5855

585640

FIG.58-55 CONSOLE BOX & BRACKET

(1507-1901)F653..LO..5F

W/O RR CONSOLE

W/O RR CONSOLE

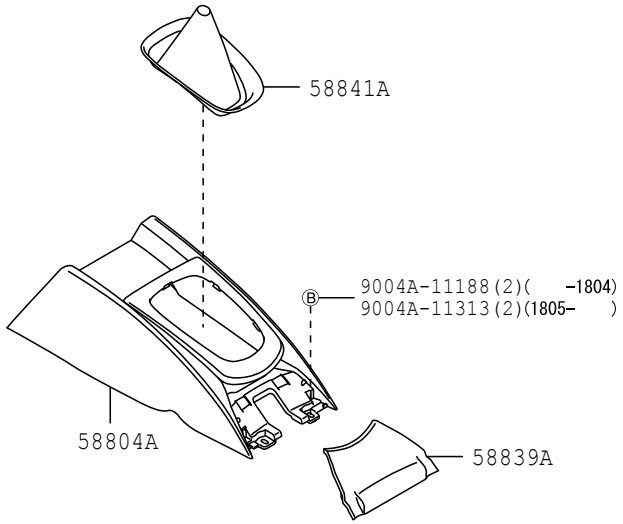

5855

585642-A

(1712-)

W/RR CONSOLE

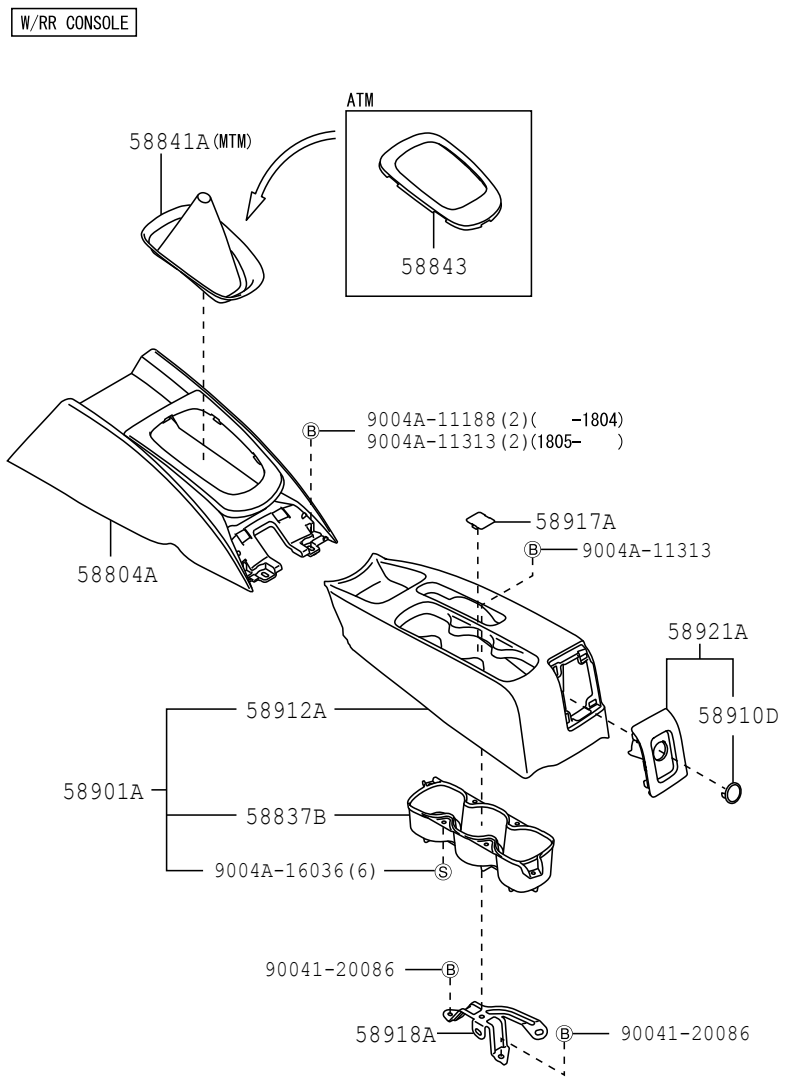

FIG.58-55 CONSOLE BOX & BRACKET

PROD_DATE	MODELS	SPEC CODE	DESCRIPTION	R/P	PART NUMBER	QYT	REV_REF FR	REV_REF TO
	58804A PANEL SUB-ASSY, CONSOLE, UPPER							
1507 - 1607	F650..STD		BLACK(TRIM1#)		58804-BZ010-C0	1		
1507 - 1901	F653		BLACK(TRIM4#)		58804-BZ010-C1	1		
1507 - 1901	F650..LO		BLACK(TRIM4#)		58804-BZ010-C1	1		
1901 -	F65#		BLACK(TRIM4#)		58804-BZ010-C2	1		
	58821A PANEL, CONSOLE							
1111 - 1507	F651		-(TRIM4#)		58821-BZ080-C0	1		
1111 - 1507	F650..LO		-(TRIM4#)		58821-BZ080-C0	1		
1111 - 1507	F650..STD		-(TRIM1#)		58821-BZ080-C1	1		
	58837B BOX, CONSOLE CUP HOLDER							
1712 - 1901	F653		OAK(TRIM4#)		58837-BZ010-E0	1		
1901 -	F65#		LINEN BEIGE(TRIM4#)		58837-BZ010-E1	1		
	58839A COVER, CONSOLE BOX HOLE							
1111 - 1507	F650..STD		MD.GRAY(TRIM1#)		58839-BZ040-B0	1		
1111 - 1507	F651..STD		-(TRIM4#)		58839-BZ040-E0	1		
1507 - 1607	F650..STD		DK.GRAY(TRIM1#)		58839-BZ040-B1	1		
	58841A COVER, SHIFTING HOLE							
1111 - 1507	F650..STD		BLACK(TRIM1#)		58841-BZ130-C0	1		
1111 - 1507	F650..LO		BLACK(TRIM4#)		58841-BZ130-C0	1		
1111 - 1507	F651..5F		BLACK(TRIM4#)		58841-BZ130-C0	1		
1507 - 1607	F650..STD		BLACK(TRIM1#)		58841-BZ130-C0	1		
1507 - 1607	F650..LO		BLACK(TRIM4#)		58841-BZ130-C0	1		
1507 - 1901	F653..5F		BLACK(TRIM4#)		58841-BZ130-C0	1		
1901 -	F65#..5F		BLACK(TRIM4#)		58841-BZ130-C0	1		

PROD_DATE	MODELS	SPEC CODE	DESCRIPTION	R/P	PART NUMBER	QYT	REV_REF FR	REV_REF TO
	+----------+							
	| 58842A | FRAME, SHIFTING HOLE							
	+----------+							
1111 - 1507	F650..STD		BLACK(TRIM1#)		58842-BZ060-C0	1		
1111 - 1507	F651		BLACK(TRIM4#)		58842-BZ060-C0	1		
1111 - 1507	F650..LO		BLACK(TRIM4#)		58842-BZ060-C0	1		
	+----------+							
	| 58843 | BEZEL, SHIFTING HOLE							
	+----------+							
1111 - 1507	F651..E4AT		BLACK(TRIM4#)		58843-BZ090-C0	1		
1507 - 1801	F653..E4AT		BLACK(TRIM4#)		58843-BZ090-C0	1		
1801 - 1901	F653..E4AT		BLACK(TRIM4#)		58843-BZ090-C1	1		
1901 -	F65#..E4AT		BLACK(TRIM4#)		58843-BZ090-C1	1		
	+----------+							
	| 58901A | BOX SUB-ASSY, CONSOLE, REAR							
	+----------+							
1712 - 1901	F653		OAK(TRIM4#)		58901-BZ040-E0	1		
1901 -	F65#		LINEN BEIGE(TRIM4#)		58901-BZ040-E1	1		
	+----------+							
	| 58910C | BOX ASSY, CONSOLE, REAR							
	+----------+							
1111 - 1507	F65#..LO		-(TRIM4#)		58911-BZ070-E0	1		
1507 - 1712	F653		OAK(TRIM4#)		58911-BZ070-E1	1		
1507 - 1712	F650..LO		OAK(TRIM4#)		58911-BZ070-E1	1		
	+----------+							
	| 58910D | CLIP(FOR CONSOLE BOX)							
	+----------+							
1111 - 1507	F650..STD		MD.GRAY(TRIM1#)		90044-67579-B2	2		
1111 - 1507	F651		-(TRIM4#)		90044-67579-E2	2		
1111 - 1507	F650..LO		-(TRIM4#)		90044-67579-E2	2		
1712 - 1901	F653				90467-05171-	4		
1901 -	F65#				90467-05171-	4		
	+----------+							
	| 58912A | BOX, REAR CONSOLE							
	+----------+							
1712 - 1901	F653		OAK(TRIM4#)		58911-BZ140-E0	1		

FIG.58-55 CONSOLE BOX & BRACKET

PROD_DATE	MODELS	SPEC CODE	DESCRIPTION	R/P	PART NUMBER	QYT	REV_REF FR	REV_REF TO
	+----------+							
	| 58912A | BOX, REAR CONSOLE							
	CONTINUED--+							
1901 -	F65#		LINEN BEIGE(TRIM4#)		58911-BZ140-E1	1		
	+----------+							
	| 58917A | COVER, CONSOLE BOX, REAR							
	+----------+							
1712 - 1901	F653		OAK(TRIM4#)		55423-BZ030-E0	1		
1901 -	F65#		LINEN BEIGE(TRIM4#)		55423-BZ030-E1	1		
	+----------+							
	| 58918A | BRACKET, BOX SUPPORT							
	+----------+							
1712 - 1901	F653				58918-BZ020-	1		
1901 -	F65#				58918-BZ020-	1		
	+----------+							
	| 58921A | PANEL, REAR CONSOLE, UPPER							
	+----------+							
1712 - 1901	F653		OAK(TRIM4#)		58921-BZ050-E0	1		
1901 -	F65#		LINEN BEIGE(TRIM4#)		58921-BZ050-E1	1		

FIG.61-51 SIDE MEMBER

(1111-)

FRONT & CENTER

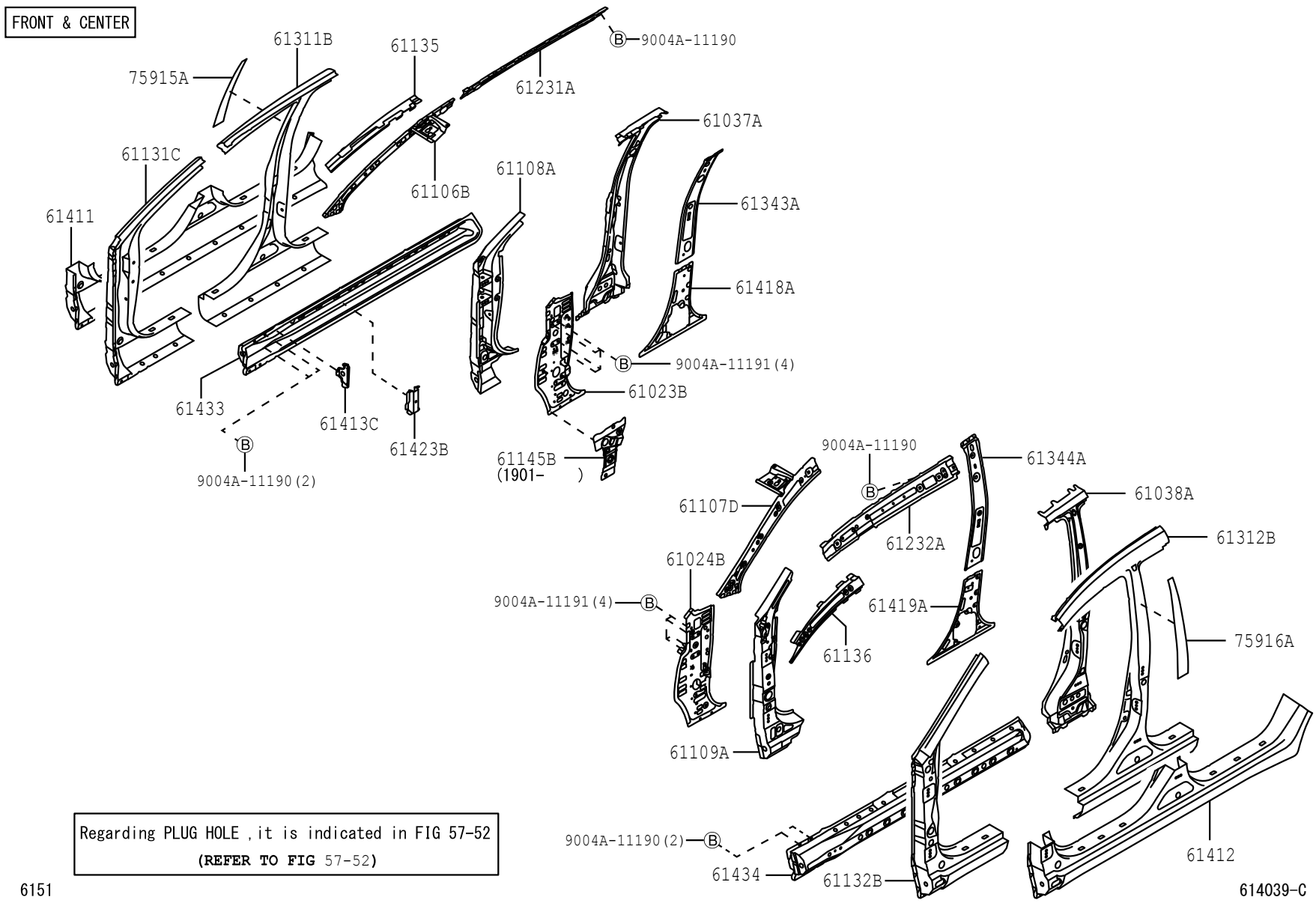

Regarding PLUG HOLE , it is indicated in FIG 57-52
(REFER TO FIG 57-52)

6151

FIG.61-51 SIDE MEMBER

(1111-)

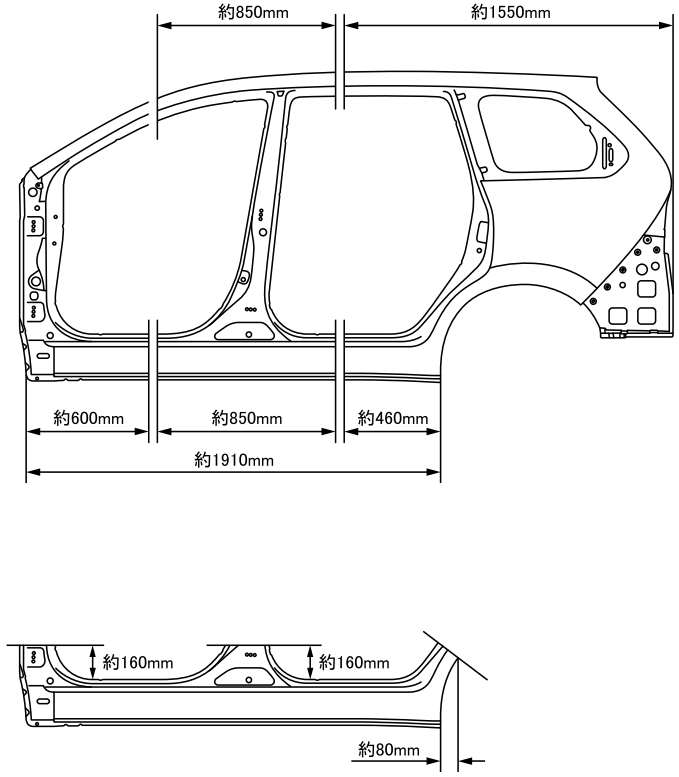

6151

614040

FIG. 61-51 SIDE MEMBER

(1111-)

QUARTER & REAR

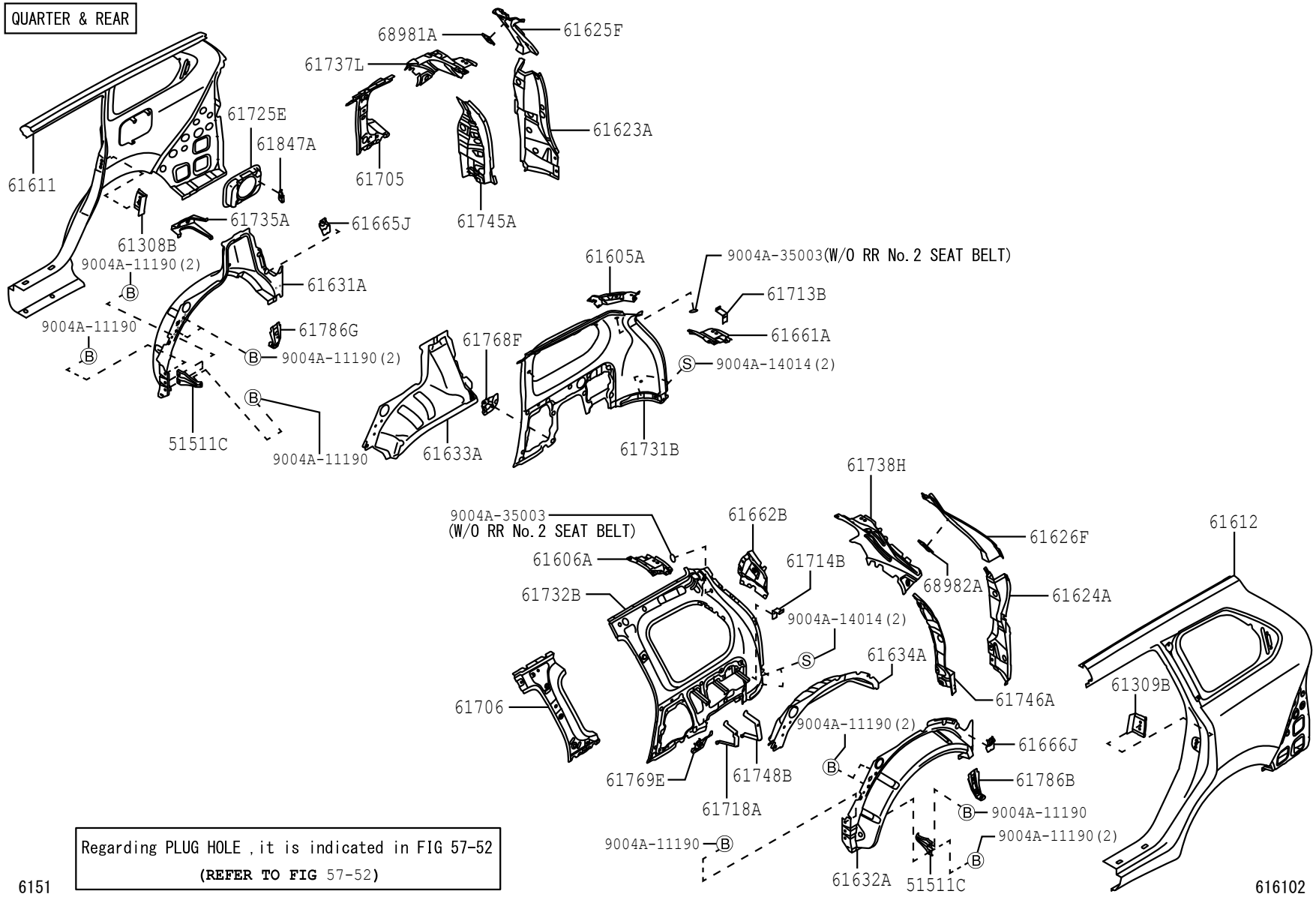

PROD_DATE	MODELS	SPEC CODE	DESCRIPTION	R/P	PART NUMBER	QYT	REV_REF FR	REV_REF TO
	+----------+							
	| 51511C | GUSSET, UPPER CONTROL ARM SUPPORT, LH							
	+----------+							
1111 - 1507	F65#				51511-BZ010-	2		
	+----------+							
	| 61023B | PILLAR SUB-ASSY, FRONT BODY, INNER RH							
	+----------+							
1111 - 1507	F65#				61023-BZ070-	1		
1507 - 1607	F650				61023-BZ330-	1		
1507 - 1901	F653				61023-BZ330-	1		
1901 -	F65#				61023-BZ300-	1		
	+----------+							
	| 61024B | PILLAR SUB-ASSY, FRONT BODY, INNER LH							
	+----------+							
1111 - 1507	F65#				61164-BZ200-	1		
1507 - 1607	F650				61164-BZ200-	1		
1507 - 1901	F653				61164-BZ200-	1		
1901 -	F65#				61164-BZ340-	1		
	+----------+							
	| 61037A | REINFORCEMENT SUB-ASSY, CENTER BODY PILLAR, RH							
	+----------+							
1111 - 1507	F65#				61037-BZ190-	1		
1507 - 1901	F65#				61037-BZ190-	1		
1901 -	F65#				61037-BZ190-	1		
	+----------+							
	| 61038A | REINFORCEMENT SUB-ASSY, CENTER BODY PILLAR, LH							
	+----------+							
1111 - 1507	F65#				61038-BZ220-	1		
1507 - 1607	F650				61038-BZ220-	1		
1507 - 1901	F653				61038-BZ220-	1		
1901 -	F65#				61038-BZ220-	1		
	+----------+							
	| 61106B | PILLAR SUB-ASSY, FRONT, RH							
	+----------+							
1111 - 1507	F65#				61106-BZ040-	1		
1507 - 1607	F650				61106-BZ050-	1		

FIG.61-51 SIDE MEMBER

PROD_DATE	MODELS	SPEC CODE	DESCRIPTION	R/P	PART NUMBER	QYT	REV_REF FR	REV_REF TO
	+----------+							
	| 61106B | PILLAR SUB-ASSY, FRONT, RH							
	CONTINUED--+							
1507 - 1901	F653				61106-BZ050-	1		
1901 -	F65#				61106-BZ050-	1		
	+----------+							
	| 61107D | PILLAR SUB-ASSY, FRONT, LH							
	+----------+							
1111 - 1507	F65#				61107-BZ040-	1		
1507 - 1607	F650				61107-BZ060-	1		
1507 - 1901	F653				61107-BZ060-	1		
1901 -	F65#				61107-BZ060-	1		
	+----------+							
	| 61108A | REINFORCE SUB-ASSY, FRONT BODY PILLAR, LOWER RH							
	+----------+							
1111 - 1507	F65#				61108-BZ110-	1		
1507 - 1901	F65#				61108-BZ110-	1		
1901 -	F65#				61108-BZ110-	1		
	+----------+							
	| 61109A | REINFORCE SUB-ASSY, FRONT BODY PILLAR, LOWER LH							
	+----------+							
1111 - 1507	F65#				61109-BZ100-	1		
1507 - 1607	F650				61109-BZ100-	1		
1507 - 1901	F653				61109-BZ100-	1		
1901 -	F65#				61109-BZ100-	1		
	+----------+							
	| 61131C | PILLAR, FRONT BODY, OUTER RH							
	+----------+							
1111 - 1507	F65#				61131-BZ240-	1		
1507 - 1901	F65#				61131-BZ240-	1		
1901 -	F65#				61131-BZ290-	1		
	+----------+							
	| 61132B | PILLAR, FRONT BODY, OUTER LH							
	+----------+							
1111 - 1507	F65#				61132-BZ240-	1		
1507 - 1607	F650				61132-BZ240-	1		

PROD_DATE	MODELS	SPEC CODE	DESCRIPTION	R/P	PART NUMBER	QYT	REV_REF FR	REV_REF TO
	+----------+							
	| 61132B | PILLAR, FRONT BODY, OUTER LH							
	CONTINUED--+							
1507 - 1901	F653				61132-BZ240-	1		
1901 -	F65#				61132-BZ240-	1		
	+----------+							
	| 61135 | REINFORCEMENT, FRONT BODY PILLAR, UPPER R							
	+----------+ H							
1111 - 1507	F65#				61135-BZ030-	1		
1507 - 1901	F65#				61135-BZ030-	1		
1901 -	F65#				61135-BZ030-	1		
	+----------+							
	| 61136 | REINFORCEMENT, FRONT BODY PILLAR, UPPER L							
	+----------+ H							
1111 - 1507	F65#				61136-BZ020-	1		
1507 - 1607	F650				61136-BZ020-	1		
1507 - 1901	F653				61136-BZ020-	1		
1901 -	F65#				61136-BZ020-	1		
	+----------+							
	| 61145B | GUSSET, FRONT BODY PILLAR, LOWER RH							
	+----------+							
1901 -	F65#				61145-BZ020-	1		
	+----------+							
	| 61231A | RAIL, ROOF SIDE, INNER RH							
	+----------+							
1111 - 1507	F65#				61231-BZ210-	1		
1507 - 1607	F650				61231-BZ210-	1		
1507 - 1901	F653				61231-BZ210-	1		
1901 -	F65#				61231-BZ210-	1		
	+----------+							
	| 61232A | RAIL, ROOF SIDE, INNER LH							
	+----------+							
1111 - 1507	F65#				61232-BZ210-	1		
1507 - 1607	F650				61232-BZ210-	1		
1507 - 1901	F653				61232-BZ210-	1		
1901 -	F65#				61232-BZ210-	1		

FIG.61-51 SIDE MEMBER

PROD_DATE	MODELS	SPEC CODE	DESCRIPTION	R/P	PART NUMBER	QYT	REV_REF FR	REV_REF TO
	+----------+							
	| 61308B | RETAINER SUB-ASSY, DOOR LOCK STRIKER, RH							
	+----------+							
1111 - 1507	F65#				61308-BZ090-	1		
1507 - 1901	F65#				61308-BZ090-	1		
1901 -	F65#				61308-BZ090-	1		
	+----------+							
	| 61309B | RETAINER SUB-ASSY, DOOR LOCK STRIKER, LH							
	+----------+							
1111 - 1507	F65#				61309-BZ010-	1		
1507 - 1607	F650				61309-BZ010-	1		
1507 - 1901	F653				61309-BZ010-	1		
1901 -	F65#				61309-BZ010-	1		
	+----------+							
	| 61311B | PILLAR, CENTER BODY, OUTER RH							
	+----------+							
1111 - 1507	F65#				61311-BZ150-	1		
1507 - 1901	F65#				61311-BZ151-	1		
1901 - 1903	F65#				61311-BZ151-	1		
1904 -	F65#				61311-BZ150-	1		
	+----------+							
	| 61312B | PILLAR, CENTER BODY, OUTER LH							
	+----------+							
1111 - 1507	F65#				61312-BZ180-	1		
1507 - 1607	F650				61312-BZ180-	1		
1507 - 1901	F653				61312-BZ180-	1		
1901 -	F65#				61312-BZ180-	1		
	+----------+							
	| 61343A | PILLAR, CENTER BODY, INNER RH							
	+----------+							
1111 - 1507	F65#				61343-BZ100-	1		
1507 - 1607	F650				61343-BZ100-	1		
1507 - 1901	F653				61343-BZ100-	1		
1901 -	F65#				61343-BZ100-	1		

PROD_DATE	MODELS	SPEC CODE	DESCRIPTION	R/P	PART NUMBER	QYT	REV_REF FR	REV_REF TO
	+----------+							
	| 61344A | PILLAR, CENTER BODY, INNER LH							
	+----------+							
1111 - 1507	F65#				61344-BZ100-	1		
1507 - 1607	F650				61344-BZ100-	1		
1507 - 1901	F653				61344-BZ100-	1		
1901 -	F65#				61344-BZ100-	1		
	+----------+							
	| 61411 | PANEL, ROCKER, OUTER RH							
	+----------+							
1111 - 1507	F65#				61411-BZ140-	1		
1507 - 1901	F65#				61411-BZ141-	1		
1901 - 1903	F65#				61411-BZ141-	1		
1904 -	F65#				61411-BZ140-	1		
	+----------+							
	| 61412 | PANEL, ROCKER, OUTER LH							
	+----------+							
1111 - 1507	F65#				61412-BZ160-	1		
1507 - 1607	F650				61412-BZ160-	1		
1507 - 1901	F653				61412-BZ160-	1		
1901 -	F65#				61412-BZ160-	1		
	+----------+							
	| 61413C | REINFORCEMENT, ROCKER PANEL, NO.2 RH							
	+----------+							
1111 - 1507	F65#				61413-BZ010-	1		
1507 - 1901	F65#				61413-BZ010-	1		
1901 -	F65#				61413-BZ010-	1		
	+----------+							
	| 61418A | REINFORCEMENT, ROCKER PANEL, RH							
	+----------+							
1111 - 1507	F65#				61418-BZ080-	1		
1507 - 1607	F650				61418-BZ080-	1		
1507 - 1901	F653				61418-BZ080-	1		
1901 -	F65#				61418-BZ080-	1		

FIG.61-51 SIDE MEMBER

PROD_DATE	MODELS	SPEC CODE	DESCRIPTION	R/P	PART NUMBER	QYT	REV_REF FR	REV_REF TO
	+----------+							
	| 61419A | REINFORCEMENT, ROCKER PANEL, LH							
	+----------+							
1111 - 1507	F65#				61419-BZ070-	1		
1507 - 1607	F650				61419-BZ070-	1		
1507 - 1901	F653				61419-BZ070-	1		
1901 -	F65#				61419-BZ070-	1		
	+----------+							
	| 61423B | REINFORCEMENT, ROCKER PANEL, NO.3 RH							
	+----------+							
1111 - 1507	F65#				61423-BZ010-	1		
1507 - 1901	F65#				61423-BZ010-	1		
1901 -	F65#				61423-BZ010-	1		
	+----------+							
	| 61433 | PANEL, ROCKER, INNER RH							
	+----------+							
1111 - 1507	F65#				61433-BZ120-	1		
1507 - 1901	F65#				61433-BZ120-	1		
1901 -	F65#				61433-BZ120-	1		
	+----------+							
	| 61434 | PANEL, ROCKER, INNER LH							
	+----------+							
1111 - 1507	F65#				61434-BZ110-	1		
1507 - 1607	F650				61434-BZ110-	1		
1507 - 1901	F653				61434-BZ110-	1		
1901 -	F65#				61434-BZ110-	1		
	+----------+							
	| 61605A | REINFORCEMENT SUB-ASSY, QUARTER PANEL, RH							
	+----------+							
1111 - 1507	F65#				61605-BZ050-	1		
1507 - 1607	F650				61605-BZ100-	1		
1507 - 1901	F653				61605-BZ100-	1		
1901 -	F65#				61605-BZ100-	1		

PROD_DATE	MODELS	SPEC CODE	DESCRIPTION	R/P	PART NUMBER	QYT	REV_REF FR	REV_REF TO
	+----------+							
	| 61606A | REINFORCEMENT SUB-ASSY, QUARTER PANEL, LH							
	+----------+							
1111 - 1507	F65#				61606-BZ050-	1		
1507 - 1607	F650				61606-BZ050-	1		
1507 - 1901	F653				61606-BZ050-	1		
1901 -	F65#				61606-BZ050-	1		
	+----------+							
	| 61611 | PANEL, QUARTER, RH							
	+----------+							
1111 - 1208	F65#				61611-BZ280-	1		
1208 - 1507	F65#				61611-BZ281-	1		
1507 - 1901	F65#				61611-BZ282-	1		
1901 -	F65#				61611-BZ282-	1		
	+----------+							
	| 61612 | PANEL, QUARTER, LH							
	+----------+							
1111 - 1507	F65#				61612-BZ290-	1		
1507 - 1607	F650				61612-BZ291-	1		
1507 - 1901	F653				61612-BZ291-	1		
1901 -	F65#				61612-BZ291-	1		
	+----------+							
	| 61623A | EXTENSION, QUARTER PANEL, OUTER RH							
	+----------+							
1111 - 1507	F65#				61623-BZ120-	1		
1507 - 1901	F65#				61623-BZ120-	1		
1901 -	F65#				61623-BZ120-	1		
	+----------+							
	| 61624A | EXTENSION, QUARTER PANEL, OUTER LH							
	+----------+							
1111 - 1507	F65#				61624-BZ130-	1		
1507 - 1607	F650				61624-BZ130-	1		
1507 - 1901	F653				61624-BZ130-	1		
1901 -	F65#				61624-BZ130-	1		

FIG.61-51 SIDE MEMBER

PROD_DATE	MODELS	SPEC CODE	DESCRIPTION	R/P	PART NUMBER	QYT	REV_REF FR	REV_REF TO
	+----------+							
	| 61625F | EXTENSION, QUARTER PANEL, UPPER RH							
	+----------+							
1111 - 1507	F65#				61625-BZ100-	1		
1507 - 1901	F65#				61625-BZ100-	1		
1901 -	F65#				61625-BZ100-	1		
	+----------+							
	| 61626F | EXTENSION, QUARTER PANEL, UPPER LH							
	+----------+							
1111 - 1507	F65#				61626-BZ100-	1		
1507 - 1607	F650				61626-BZ100-	1		
1507 - 1901	F653				61626-BZ100-	1		
1901 -	F65#				61626-BZ100-	1		
	+----------+							
	| 61631A | PANEL, QUARTER WHEEL HOUSE, OUTER RH							
	+----------+							
1111 - 1507	F65#				61631-BZ100-	1		
1507 - 1607	F650				61631-BZ100-	1		
1507 - 1901	F653				61631-BZ100-	1		
1901 -	F65#				61631-BZ100-	1		
	+----------+							
	| 61632A | PANEL, QUARTER WHEEL HOUSE, OUTER LH							
	+----------+							
1111 - 1507	F65#				61632-BZ100-	1		
1507 - 1607	F650				61632-BZ100-	1		
1507 - 1901	F653				61632-BZ100-	1		
1901 -	F65#				61632-BZ100-	1		
	+----------+							
	| 61633A | PANEL, QUARTER WHEEL HOUSE, INNER RH							
	+----------+							
1111 - 1507	F65#				61633-BZ010-	1		
1111 - 1507	F65#		L/ABS		61633-BZ010-	1		
1507 - 1607	F650		L/ABS		61633-BZ010-	1		
1507 - 1901	F653		L/ABS		61633-BZ010-	1		
1901 -	F653		L/ABS		61633-BZ010-	1		

PROD_DATE	MODELS	SPEC CODE	DESCRIPTION	R/P	PART NUMBER	QYT	REV_REF FR	REV_REF TO
	+----------+							
	| 61633A | PANEL, QUARTER WHEEL HOUSE, INNER RH							
	CONTINUED--+							
1901 -	F654		W/ABS		61633-BZ020-	1		
	+----------+							
	| 61634A | PANEL, QUARTER WHEEL HOUSE, INNER LH							
	+----------+							
1111 - 1507	F65#				61634-BZ010-	1		
1507 - 1607	F650				61634-BZ010-	1		
1507 - 1901	F653				61634-BZ010-	1		
1901 -	F653				61634-BZ010-	1		
1901 -	F654				61634-BZ020-	1		
	+----------+							
	| 61661A | EXTENSION, QUARTER PANEL TO UPPER BACK, R							
	+----------+ H							
1111 - 1507	F65#				61661-BZ070-	1		
1507 - 1607	F650				61661-BZ070-	1		
1507 - 1901	F653				61661-BZ070-	1		
1901 -	F65#				61661-BZ070-	1		
	+----------+							
	| 61662B | EXTENSION, QUARTER PANEL TO UPPER BACK, L							
	+----------+ H							
1111 - 1507	F65#				61662-BZ070-	1		
1507 - 1607	F650				61662-BZ070-	1		
1507 - 1807	F653				61662-BZ070-	1		
1808 - 1901	F653				61662-BZ071-	1		
1901 -	F65#				61662-BZ150-	1		
	+----------+							
	| 61665J | PLATE, SEAT BELT ANCHORAGE, RH							
	+----------+							
1111 - 1507	F65#				61665-BZ040-	1		
1507 - 1607	F650				61665-BZ040-	1		
1507 - 1901	F653				61665-BZ040-	1		
1901 -	F65#				61665-BZ040-	1		

FIG.61-51 SIDE MEMBER

PROD_DATE	MODELS	SPEC CODE	DESCRIPTION	R/P	PART NUMBER	QYT	REV_REF FR	REV_REF TO
	+----------+							
	| 61666J | PLATE, SEAT BELT ANCHORAGE, LH							
	+----------+							
1111 - 1507	F65#				61666-BZ040-	1		
1507 - 1607	F650				61666-BZ040-	1		
1507 - 1901	F653				61666-BZ040-	1		
1901 -	F65#				61666-BZ040-	1		
	+----------+							
	| 61705 | PANEL SUB-ASSY, ROOF SIDE, INNER RH							
	+----------+							
1111 - 1409	F65#				61705-BZ050-	1		
1410 - 1507	F65#				61705-BZ051-	1		
1507 - 1607	F650				61705-BZ051-	1		
1507 - 1901	F653				61705-BZ051-	1		
1901 -	F65#				61705-BZ051-	1		
	+----------+							
	| 61706 | PANEL SUB-ASSY, ROOF SIDE, INNER LH							
	+----------+							
1111 - 1409	F65#				61706-BZ050-	1		
1410 - 1507	F65#				61706-BZ051-	1		
1507 - 1607	F650				61706-BZ051-	1		
1507 - 1901	F653				61706-BZ051-	1		
1901 -	F65#				61706-BZ051-	1		
	+----------+							
	| 61713B | REINFORCE, ROOF SIDE, OUTER RH							
	+----------+							
1111 - 1507	F65#				61713-BZ060-	1		
1507 - 1607	F650				61713-BZ060-	1		
1507 - 1901	F653				61713-BZ060-	1		
1901 -	F65#				61713-BZ060-	1		
	+----------+							
	| 61714B | REINFORCE, ROOF SIDE, OUTER LH							
	+----------+							
1111 - 1507	F65#				61714-BZ040-	1		
1507 - 1607	F650				61714-BZ040-	1		

PROD_DATE	MODELS	SPEC CODE	DESCRIPTION	R/P	PART NUMBER	QYT	REV_REF FR	REV_REF TO
	+----------+							
	| 61714B | REINFORCE, ROOF SIDE, OUTER LH							
	CONTINUED--+							
1507 - 1901	F653				61714-BZ040-	1		
1901 -	F65#				61714-BZ040-	1		
	+----------+							
	| 61718A | REINFORCEMENT, QUARTER PANEL EXTENSION, L							
	+----------+ H							
1111 - 1507	F65#				61718-BZ040-	1		
1507 - 1607	F650				61718-BZ040-	1		
1507 - 1901	F653				61718-BZ040-	1		
1901 -	F65#				61718-BZ040-	1		
	+----------+							
	| 61725E | BOX, FUEL INLET							
	+----------+							
1111 - 1208	F65#				61725-BZ050-	1		
1208 - 1507	F65#				61725-BZ051-	1		
1507 - 1901	F65#				61725-BZ051-	1		
1901 -	F65#				61725-BZ051-	1		
	+----------+							
	| 61731B | PANEL, ROOF SIDE, INNER RH							
	+----------+							
1111 - 1409	F650				61731-BZ140-	1		
1111 - 1409	F651..STD				61731-BZ140-	1		
1111 - 1409	F651..LO				61731-BZ150-	1		
1410 - 1507	F650				61731-BZ141-	1		
1410 - 1507	F651..STD				61731-BZ141-	1		
1410 - 1507	F651..LO				61731-BZ151-	1		
1507 - 1607	F650				61731-BZ220-	1		
1507 - 1901	F653..LO				61731-BZ220-	1		
1507 - 1901	F653..STD				61731-BZ230-	1		
1901 -	F653..LO				61731-BZ220-	1		
1901 -	F65#..STD				61731-BZ230-	1		

FIG.61-51 SIDE MEMBER

PROD_DATE	MODELS	SPEC CODE	DESCRIPTION	R/P	PART NUMBER	QYT	REV_REF FR	REV_REF TO
	+----------+							
	| 61732B | PANEL, ROOF SIDE, INNER LH							
	+----------+							
1111 - 1409	F650				61732-BZ120-	1		
1111 - 1409	F651..STD				61732-BZ120-	1		
1111 - 1409	F651..LO				61732-BZ130-	1		
1410 - 1507	F650				61732-BZ121-	1		
1410 - 1507	F651..STD				61732-BZ121-	1		
1410 - 1507	F651..LO				61732-BZ131-	1		
1507 - 1607	F650				61732-BZ210-	1		
1507 - 1901	F653..LO				61732-BZ210-	1		
1507 - 1901	F653..STD				61732-BZ220-	1		
1901 -	F653..LO				61732-BZ210-	1		
1901 -	F65#..STD				61732-BZ220-	1		
	+----------+							
	| 61735A | PANEL, ROOF SIDE, INNER REAR RH							
	+----------+							
1111 - 1507	F65#				61735-BZ080-	1		
1507 - 1607	F650				61735-BZ080-	1		
1507 - 1901	F653				61735-BZ080-	1		
1901 -	F65#				61735-BZ080-	1		
	+----------+							
	| 61737L | REINFORCEMENT, ROOF SIDE, INNER RH							
	+----------+							
1111 - 1507	F65#				61737-BZ050-	1		
1507 - 1901	F65#				61737-BZ050-	1		
1901 -	F65#				61737-BZ050-	1		
	+----------+							
	| 61738H | REINFORCEMENT, ROOF SIDE, INNER LH							
	+----------+							
1111 - 1507	F65#				61738-BZ040-	1		
1507 - 1607	F650				61738-BZ040-	1		
1507 - 1807	F653				61738-BZ040-	1		

PROD_DATE	MODELS	SPEC CODE	DESCRIPTION	R/P	PART NUMBER	QYT	REV_REF FR	REV_REF TO
	+----------+							
	| 61738H | REINFORCEMENT, ROOF SIDE, INNER LH							
	CONTINUED--+							
1808 - 1901	F653				61738-BZ041-	1		
1901 -	F65#				61738-BZ050-	1		
	+----------+							
	| 61745A | REINFORCEMENT, BACK DOOR OPENING, LOWER R							
	+----------+ H							
1111 - 1507	F65#				61745-BZ060-	1		
1507 - 1901	F65#				61745-BZ060-	1		
1901 -	F65#				61745-BZ060-	1		
	+----------+							
	| 61746A | REINFORCEMENT, BACK DOOR OPENING, LOWER L							
	+----------+ H							
1111 - 1507	F65#				61746-BZ040-	1		
1507 - 1607	F650				61746-BZ040-	1		
1507 - 1901	F653				61746-BZ040-	1		
1901 -	F65#				61746-BZ040-	1		
	+----------+							
	| 61748B | REINFORCEMENT, ROOF SIDE, INNER REAR, LH							
	+----------+							
1111 - 1507	F65#				61748-BZ040-	1		
1507 - 1607	F650				61748-BZ040-	1		
1507 - 1901	F653				61748-BZ040-	1		
1901 -	F65#				61748-BZ040-	1		
	+----------+							
	| 61768F | REINFORCE, BELT ANCHOR TO QUARTER, INNER LOWER RH							
	+----------+							
1111 - 1507	F65#				61768-BZ060-	1		
1507 - 1607	F650				61768-BZ060-	1		
1507 - 1901	F653				61768-BZ060-	1		
1901 -	F65#				61768-BZ060-	1		
	+----------+							
	| 61769E | REINFORCEMENT, BELT ANCHOR TO QUARTER, INNER LOWER LH							
	+----------+							
1111 - 1507	F65#				61769-BZ070-	1		

FIG.61-51 SIDE MEMBER

PROD_DATE	MODELS	SPEC CODE	DESCRIPTION	R/P	PART NUMBER	QYT	REV_REF FR	REV_REF TO
	+----------+							
	| 61769E | REINFORCEMENT, BELT ANCHOR TO QUARTER, INNER LOWER LH							
	CONTINUED--+							
1507 - 1607	F650				61769-BZ070-	1		
1507 - 1901	F653				61769-BZ070-	1		
1901 -	F65#				61769-BZ070-	1		
	+----------+							
	| 61786B | BRACKET, REAR BUMPER SIDE, LH							
	+----------+							
1111 - 1507	F65#				61786-BZ050-	1		
1507 - 1607	F650				61786-BZ050-	1		
1507 - 1901	F653				61786-BZ050-	1		
1901 -	F65#				61786-BZ050-	1		
	+----------+							
	| 61786G | BRACKET, REAR BUMPER SIDE							
	+----------+							
1111 - 1507	F65#				61786-BZ050-	1		
1507 - 1901	F65#				61786-BZ050-	1		
1901 -	F65#				61786-BZ050-	1		
	+----------+							
	| 61847A | RETAINER, QUARTER PANEL, RH							
	+----------+							
1111 - 1507	F65#				61848-BZ020-	1		
1507 - 1901	F65#				61848-BZ020-	1		
1901 -	F65#				61848-BZ020-	1		
	+----------+							
	| 68981A | RETAINER, BACK DOOR STAY, RH							
	+----------+							
1111 - 1507	F65#				68981-BZ060-	1		
1507 - 1901	F65#				68981-BZ060-	1		
1901 -	F65#				68981-BZ060-	1		
	+----------+							
	| 68982A | RETAINER, BACK DOOR STAY, LH							
	+----------+							
1111 - 1507	F65#				68981-BZ060-	1		
1507 - 1607	F650				68981-BZ060-	1		

PROD_DATE	MODELS	SPEC CODE	DESCRIPTION	R/P	PART NUMBER	QYT	REV_REF FR	REV_REF TO
	+----------+							
	| 68982A | RETAINER, BACK DOOR STAY, LH							
	CONTINUED--+							
1507 - 1901	F653				68981-BZ060-	1		
1901 -	F65#				68981-BZ060-	1		
	+----------+							
	| 75915A | TAPE, BLACK OUT CENTER PILLAR, RH							
	+----------+							
1111 - 1507	F65#..LO		TUYAKESI BLACK DUMMY (1E7 ,B72 ,R56 ,S37 ,T23 ,W09)		75915-BZ040-C0	1		
1507 - 1901	F653..STD		TUYAKESI BLACK DUMMY (1E7 ,1G3 ,3Q3 ,4U3 ,8X2 ,T23 ,W09)		75915-BZ040-C0	1		
1901 -	F65#..STD		TUYAKESI BLACK DUMMY (1E7 ,1G3 ,3Q3 ,4T3 ,B79 ,W09 ,W24)		75915-BZ040-C0	1		
	+----------+							
	| 75916A | TAPE, BLACK OUT CENTER PILLAR, LH							
	+----------+							
1111 - 1507	F65#..LO		TUYAKESI BLACK DUMMY (1E7 ,B72 ,R56 ,S37 ,T23 ,W09)		75916-BZ040-C0	1		
1507 - 1901	F653..STD		TUYAKESI BLACK DUMMY (1E7 ,1G3 ,3Q3 ,4U3 ,8X2 ,T23 ,W09)		75916-BZ040-C0	1		
1901 -	F65#..STD		TUYAKESI BLACK DUMMY (1E7 ,1G3 ,3Q3 ,4T3 ,B79 ,W09 ,W24)		75916-BZ040-C0	1		

FIG. 61-52 SIDE WINDOW

(1111-)

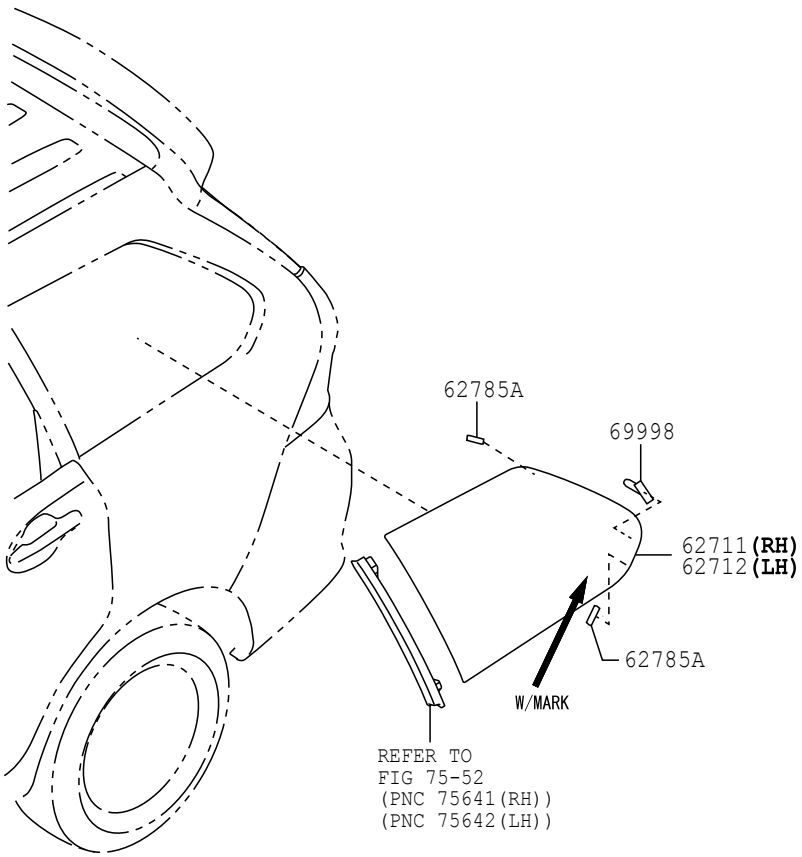

6152

614029-B

FIG. 61-52 SIDE WINDOW

PROD_DATE	MODELS	SPEC CODE	DESCRIPTION	R/P	PART NUMBER	QYT	REV_REF FR	REV_REF TO
	62711		GLASS, QUARTER WINDOW, RH					
1111 - 1202	F65#		ASAHIMAS, GREEN		62711-BZ210-	1		
1111 - 1202	F65#		MULIA GLASS, GREEN		62711-BZ220-	1		
1203 - 1507	F65#		ASAHIMAS, GREEN		62711-BZ211-	1		
1203 - 1507	F65#		MULIA GLASS, GREEN		62711-BZ221-	1		
1507 - 1607	F650		ASAHIMAS, GREEN, ASAHI MAS		62711-BZ211-	1		
1507 - 1607	F650		MULIA GLASS, GREEN, MU LIA GLASS		62711-BZ221-	1		
1507 - 1901	F653		ASAHIMAS, GREEN, ASAHI MAS		62711-BZ211-	1		
1507 - 1901	F653		MULIA GLASS, GREEN, MU LIA GLASS		62711-BZ221-	1		
1901 -	F65#		ASAHIMAS, GREEN, ASAHI MAS		62711-BZ211-	1		
1901 -	F65#		MULIA GLASS, GREEN, MU LIA GLASS		62711-BZ221-	1		
	62712		GLASS, QUARTER WINDOW, LH					
1111 - 1202	F65#		ASAHIMAS, GREEN		62712-BZ200-	1		
1111 - 1202	F65#		MULIA GLASS, GREEN		62712-BZ210-	1		
1203 - 1507	F65#		ASAHIMAS, GREEN		62712-BZ201-	1		
1203 - 1507	F65#		MULIA GLASS, GREEN		62712-BZ211-	1		
1507 - 1607	F650		ASAHIMAS, GREEN, ASAHI MAS		62712-BZ201-	1		
1507 - 1607	F650		MULIA GLASS, GREEN, MU LIA GLASS		62712-BZ211-	1		
1507 - 1901	F653		ASAHIMAS, GREEN, ASAHI MAS		62712-BZ201-	1		
1507 - 1901	F653		MULIA GLASS, GREEN, MU LIA GLASS		62712-BZ211-	1		
1901 -	F65#		ASAHIMAS, GREEN, ASAHI MAS		62712-BZ201-	1		

FIG.61-52 SIDE WINDOW

PROD_DATE	MODELS	SPEC CODE	DESCRIPTION	R/P	PART NUMBER	QYT	REV_REF FR	REV_REF TO
	+----------+							
	| 62712 | GLASS, QUARTER WINDOW, LH							
	CONTINUED--+							
1901 -	F65#		MULIA GLASS,GREEN,MULIA GLASS		62712-BZ211-	1		
	+----------+							
	| 62785A | SPACER, QUARTER WINDOW GLASS							
	+----------+							
1111 - 1507	F65#				64818-BZ010-	4		
				#	(64818-87704-)	1		
1507 - 1607	F650				64818-BZ010-	4		
				#	(64818-87704-)	1		
1507 - 1901	F653				64818-BZ010-	4		
				#	(64818-87704-)	1		
1901 -	F65#				64818-BZ010-	4		
				#	(64818-87704-)	1		
	+----------+							
	| 69998 | PIN, QUARTER WINDOW GUIDE PIECE, NO.1							
	+----------+							
1111 - 1507	F65#				69998-BZ010-	2		
1507 - 1607	F650				69998-BZ010-	2		
1507 - 1901	F653				69998-BZ010-	2		
1901 -	F65#				69998-BZ010-	2		

FIG.61-53 ROOF PANEL & BACK PANEL

(1111-)

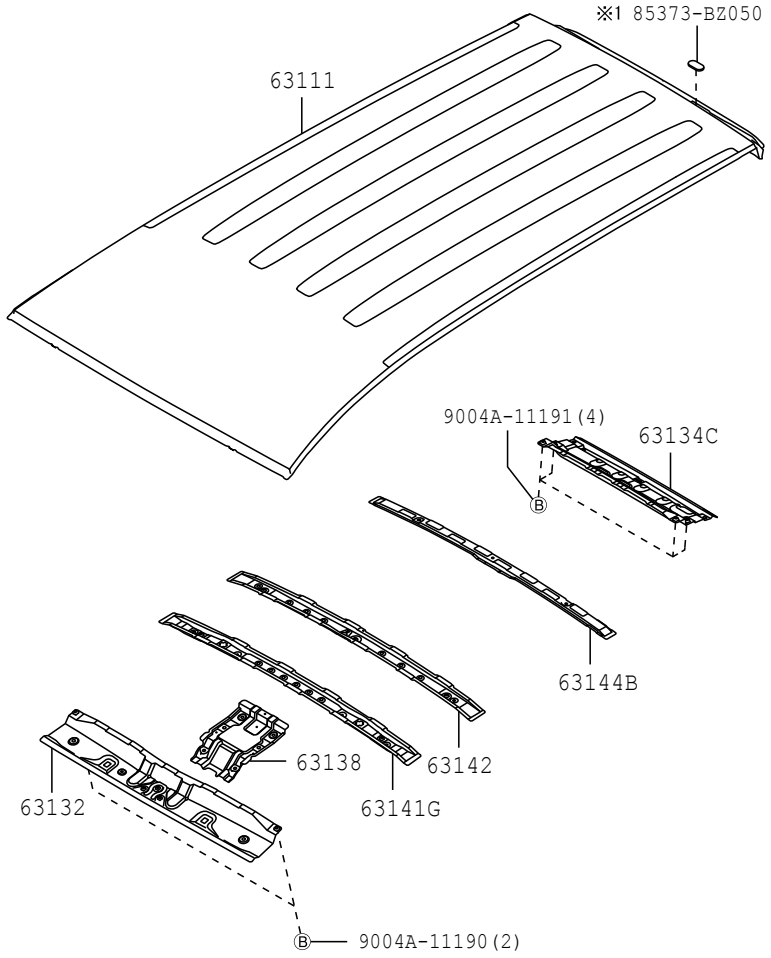

※1 W/O RR WIPER

6153

614031-E

FIG.61-53 ROOF PANEL & BACK PANEL

PROD_DATE	MODELS	SPEC CODE	DESCRIPTION	R/P	PART NUMBER	QYT	REV_REF FR	REV_REF TO
	63111	PANEL, ROOF						
1111 - 1507	F65#				63111-BZ210-	1		
1507 - 1607	F650				63111-BZ210-	1		
1507 - 1901	F653				63111-BZ210-	1		
1901 -	F65#				63111-BZ300-	1		
	63132	PANEL, WINDSHIELD HEADER, INNER						
1111 - 1507	F65#				63132-BZ160-	1		
1507 - 1607	F650				63132-BZ160-	1		
1507 - 1901	F653				63132-BZ160-	1		
1901 -	F65#				63132-BZ160-	1		
	63134C	FRAME, BACK DOOR OPENING, INNER						
1111 - 1507	F65#				63134-BZ130-	1		
1507 - 1607	F650				63134-BZ130-	1		
1507 - 1901	F653				63134-BZ130-	1		
1901 -	F65#				63134-BZ210-	1		
	63138	BRACKET, DOME LAMP, NO.2						
1111 - 1507	F65#				63138-BZ010-	1		
1507 - 1607	F650				63138-BZ010-	1		
1507 - 1901	F653				63138-BZ010-	1		
1901 -	F65#				63138-BZ010-	1		
	63141G	REINFORCEMENT, ROOF PANEL, NO.1						
1111 - 1507	F65#				63141-BZ100-	1		
1507 - 1607	F650				63141-BZ100-	1		
1507 - 1901	F653				63141-BZ100-	1		
1901 -	F65#				63141-BZ100-	1		

FIG.61-53 ROOF PANEL & BACK PANEL

PROD_DATE	MODELS	SPEC CODE	DESCRIPTION	R/P	PART NUMBER	QYT	REV_REF FR	REV_REF TO
	+----------+							
	| 63142 |		REINFORCEMENT, ROOF PANEL, NO.2					
	+----------+							
1111 - 1507	F65#				63142-BZ100-	1		
1507 - 1607	F650				63142-BZ100-	1		
1507 - 1901	F653				63142-BZ100-	1		
1901 -	F65#				63142-BZ100-	1		
	+----------+							
	| 63144B |		REINFORCEMENT, ROOF PANEL, NO.4					
	+----------+							
1111 - 1507	F65#				63144-BZ070-	1		
1507 - 1607	F650				63144-BZ070-	1		
1507 - 1901	F653				63144-BZ070-	1		
1901 -	F65#				63144-BZ070-	1		

(1111-)

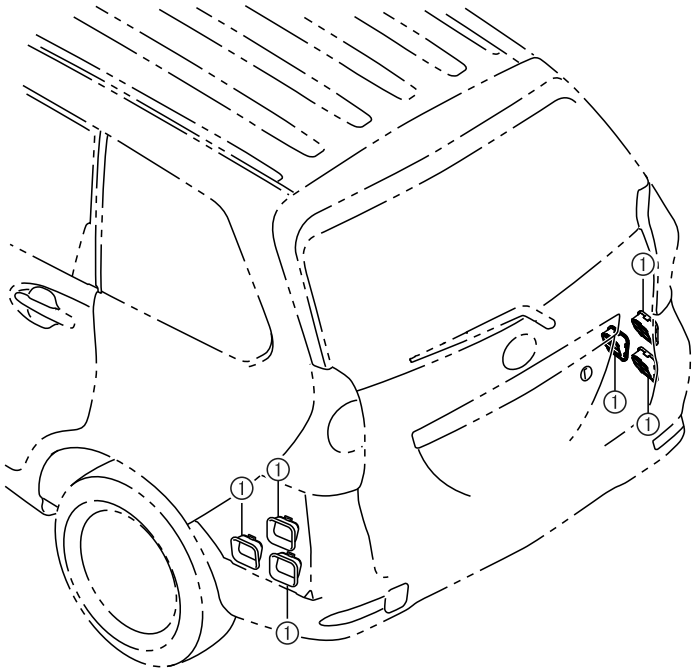

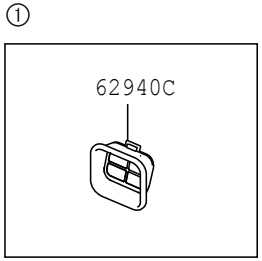

6155

614032

FIG.61-55 REAR VENTILATOR & ROOF VENTILATOR

PROD_DATE	MODELS	SPEC CODE	DESCRIPTION	R/P	PART NUMBER	QYT	REV_REF FR	REV_REF TO
	62940C DUCT ASSY, QUARTER VENT							
1111 - 1507	F65#				62930-BZ030-	6		
1507 - 1607	F650				62930-BZ030-	6		
1507 - 1901	F653				62930-BZ030-	6		
1901 -	F65#				62930-BZ030-	6		

FIG.64-51 INSIDE TRIM BOARD

(1111-1507)F650 ; (1111-1507)F651..STD ; (1507-1901)F650 ; (1507-1901)F653
..LO ; (1901-)LO
SEMI TRIM

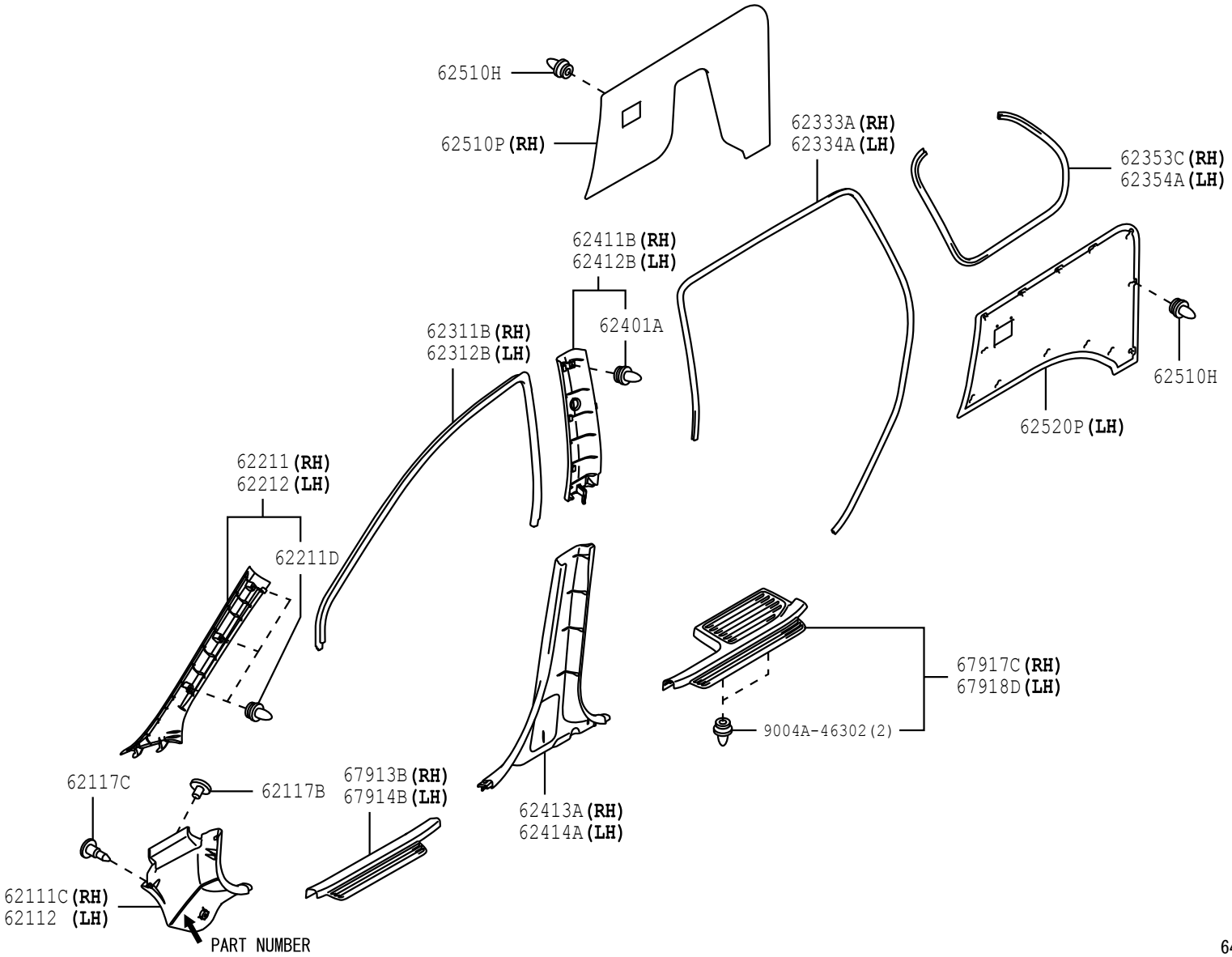

6451

642934-C

FIG.64-51 INSIDE TRIM BOARD

(1111-1507)F651..LO ; (1507-1901)F650 ; (1507-1901)F653..STD ; (1901-)
STD
FULL TRIM

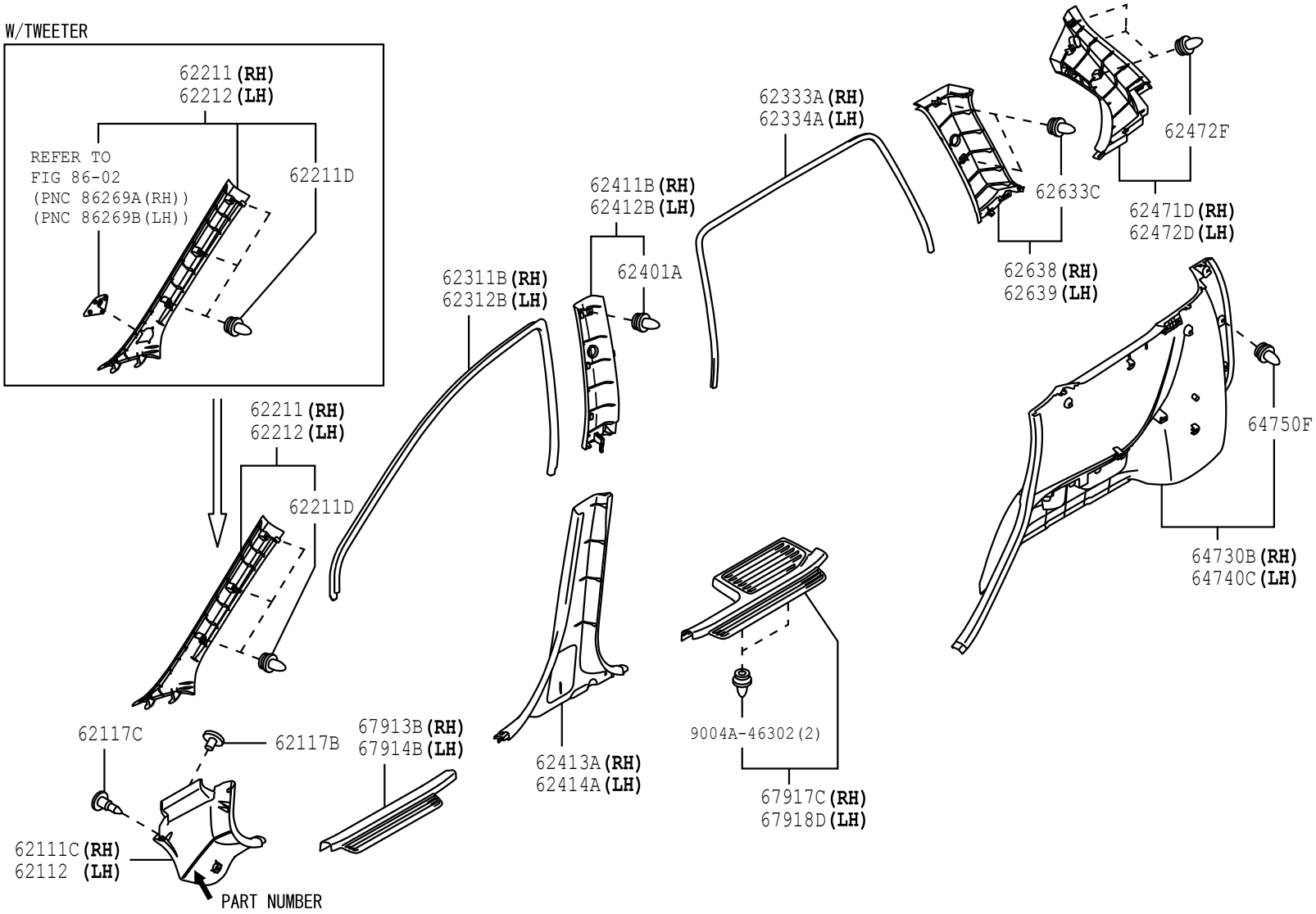

6451

642935-D

PROD_DATE	MODELS	SPEC CODE	DESCRIPTION	R/P	PART NUMBER	QYT	REV_REF FR	REV_REF TO
	62111C BOARD, COWL SIDE TRIM, RH							
1111 - 1507	F650..STD		DK.GRAY(TRIM1#)		62111-BZ160-B0	1		
1111 - 1507	F651		-(TRIM4#)		62111-BZ160-E0	1		
1111 - 1507	F650..LO		-(TRIM4#)		62111-BZ160-E0	1		
1507 - 1607	F650..STD		DK.GRAY(TRIM1#)		62111-BZ220-B0	1		
1507 - 1801	F653		DK.GRAY(TRIM4#)		62111-BZ220-B0	1		
1507 - 1801	F650..LO		DK.GRAY(TRIM4#)		62111-BZ220-B0	1		
1801 - 1901	F653		BLACK(TRIM4#)		62111-BZ220-C0	1		
1901 -	F65#		LINEN BEIGE(TRIM4#)		62111-BZ220-E0	1		
	62112 BOARD, COWL SIDE TRIM, LH							
1111 - 1507	F650..STD		DK.GRAY(TRIM1#)		62112-BZ160-B0	1		
1111 - 1507	F651		-(TRIM4#)		62112-BZ160-E0	1		
1111 - 1507	F650..LO		-(TRIM4#)		62112-BZ160-E0	1		
1507 - 1603	F650..STD		DK.GRAY(TRIM1#),W/ PART NUMBER		62112-BZ160-B0	1		
1507 - 1603	F653		DK.GRAY(TRIM4#),W/ PART NUMBER		62112-BZ160-B0	1		
1507 - 1603	F650..LO		DK.GRAY(TRIM4#),W/ PART NUMBER		62112-BZ160-B0	1		
1507 - 1607	F650..STD		DK.GRAY(TRIM1#),W/PART NUMBER		62112-BZ220-B0	1		
1507 - 1801	F653		DK.GRAY(TRIM4#),W/PART NUMBER		62112-BZ220-B0	1		
1507 - 1801	F650..LO		DK.GRAY(TRIM4#),W/PART NUMBER		62112-BZ220-B0	1		
1801 - 1901	F653		BLACK(TRIM4#),W/PART NUMBER		62112-BZ220-C0	1		
1901 -	F65#		LINEN BEIGE(TRIM4#), W/PART NUMBER		62112-BZ220-E0	1		

FIG.64-51 INSIDE TRIM BOARD

PROD_DATE	MODELS	SPEC CODE	DESCRIPTION	R/P	PART NUMBER	QYT	REV_REF FR	REV_REF TO
	62117B CLIP, NO.1(FOR COWL SIDE TRIM)							
1111 - 1507	F650..STD		DK.GRAY(TRIM1#)		9004A-46131-B0	2		
1111 - 1507	F651		-(TRIM4#)		9004A-46131-E1	2		
1111 - 1507	F650..LO		-(TRIM4#)		9004A-46131-E1	2		
1507 - 1607	F650..STD		DK.GRAY(TRIM1#)		9004A-46131-B0	2		
1507 - 1804	F653		DK.GRAY(TRIM4#)		9004A-46131-B0	2		
1507 - 1804	F650..LO		DK.GRAY(TRIM4#)		9004A-46131-B0	2		
1804 - 1901	F653		BLACK(TRIM4#)		9004A-46131-C1	2		
1901 -	F65#		LINEN BEIGE(TRIM4#)		9004A-46131-E2	2		
	62117C CLIP, NO.2(FOR COWL SIDE TRIM)							
1111 - 1507	F650..STD		DK.GRAY(TRIM1#)		9004A-46132-B0	2		
1111 - 1507	F651		-(TRIM4#)		9004A-46132-E1	2		
1111 - 1507	F650..LO		-(TRIM4#)		9004A-46132-E1	2		
1507 - 1607	F650..STD		DK.GRAY(TRIM1#)		9004A-46132-B0	2		
1507 - 1804	F653		DK.GRAY(TRIM4#)		9004A-46132-B0	2		
1507 - 1804	F650..LO		DK.GRAY(TRIM4#)		9004A-46132-B0	2		
1804 - 1901	F653		BLACK(TRIM4#)		9004A-46132-C0	2		
1901 -	F65#		LINEN BEIGE(TRIM4#)		9004A-46132-E2	2		
	62211 GARNISH, FRONT PILLAR, RH							
1111 - 1507	F650..STD		LT.GRAY(TRIM1#)		62211-BZ060-B0	1		
1111 - 1507	F651		LT.GRAY(TRIM4#)		62211-BZ060-B0	1		
1111 - 1507	F650..LO		LT.GRAY(TRIM4#)		62211-BZ060-B0	1		
1507 - 1607	F650..STD		LT.GRAY(TRIM1#)		62211-BZ060-B0	1		
1507 - 1901	F653		LT.GRAY(TRIM4#)		62211-BZ060-B0	1		
1507 - 1901	F650..LO		LT.GRAY(TRIM4#)		62211-BZ060-B0	1		
1901 -	F65#..STD		LT.GRAY(TRIM4#)		62210-BZ040-B0	1		

PROD_DATE	MODELS	SPEC CODE	DESCRIPTION	R/P	PART NUMBER	QYT	REV_REF FR	REV_REF TO
	+----------+							
	| 62211 | GARNISH, FRONT PILLAR, RH							
	CONTINUED--+							
1901 -	F653..LO		LT.GRAY(TRIM4#)		62211-BZ060-B0	1		
	+----------+							
	| 62211D | CLIP(FOR FRONT BODY PILLAR GARNISH)							
	+----------+							
1111 - 1507	F65#				9004A-46275-	6		
1507 - 1901	F65#				9004A-46275-	6		
1901 -	F65#				9004A-46275-	6		
	+----------+							
	| 62212 | GARNISH, FRONT PILLAR, LH							
	+----------+							
1111 - 1507	F650..STD		LT.GRAY(TRIM1#)		62212-BZ160-B0	1		
1111 - 1507	F651		LT.GRAY(TRIM4#)		62212-BZ160-B0	1		
1111 - 1507	F650..LO		LT.GRAY(TRIM4#)		62212-BZ160-B0	1		
1507 - 1607	F650..STD		LT.GRAY(TRIM1#)		62212-BZ160-B0	1		
1507 - 1901	F653		LT.GRAY(TRIM4#)		62212-BZ160-B0	1		
1507 - 1901	F650..LO		LT.GRAY(TRIM4#)		62212-BZ160-B0	1		
1901 -	F653..LO		LT.GRAY(TRIM4#)		62212-BZ160-B0	1		
1901 -	F65#..STD		LT.GRAY(TRIM4#)		62220-BZ030-B0	1		
	+----------+							
	| 62311B | WEATHERSTRIP, FRONT DOOR OPENING TRIM, RH							
	+----------+							
1111 - 1507	F65#				62311-BZ060-	1		
1507 - 1607	F650				62311-BZ060-	1		
1507 - 1901	F653				62311-BZ060-	1		
1901 -	F65#				62311-BZ060-	1		
	+----------+							
	| 62312B | WEATHERSTRIP, FRONT DOOR OPENING TRIM, LH							
	+----------+							
1111 - 1507	F65#				62312-BZ060-	1		
1507 - 1607	F650				62312-BZ060-	1		
1507 - 1901	F653				62312-BZ060-	1		
1901 -	F65#				62312-BZ060-	1		

FIG.64-51 INSIDE TRIM BOARD

PROD_DATE	MODELS	SPEC CODE	DESCRIPTION	R/P	PART NUMBER	QYT	REV_REF FR	REV_REF TO
	+----------+							
	| 62333A | TRIM, REAR DOOR OPENING, RH							
	+----------+							
1111 - 1507	F650				62333-BZ050-	1		
1111 - 1507	F651..STD				62333-BZ050-	1		
1111 - 1507	F651..LO				62333-BZ060-	1		
1507 - 1607	F650				62333-BZ050-	1		
1507 - 1901	F653..LO				62333-BZ050-	1		
1507 - 1901	F653..STD				62333-BZ060-	1		
1901 -	F653..LO				62333-BZ050-	1		
1901 -	F65#..STD				62333-BZ060-	1		
	+----------+							
	| 62334A | TRIM, REAR DOOR OPENING, LH							
	+----------+							
1111 - 1507	F650				62333-BZ050-	1		
1111 - 1507	F651..STD				62333-BZ050-	1		
1111 - 1507	F651..LO				62333-BZ060-	1		
1507 - 1607	F650				62333-BZ050-	1		
1507 - 1901	F653..LO				62333-BZ050-	1		
1507 - 1901	F653..STD				62333-BZ060-	1		
1901 -	F653..LO				62333-BZ050-	1		
1901 -	F65#..STD				62333-BZ060-	1		
	+----------+							
	| 62353C | TRIM, QUARTER WINDOW INSIDE, RH							
	+----------+							
1111 - 1507	F650				62353-BZ030-	1		
1111 - 1507	F651..STD				62353-BZ030-	1		
1507 - 1607	F650				62353-BZ030-	1		
1507 - 1901	F653..LO				62353-BZ030-	1		
1901 -	F653..LO				62353-BZ030-	1		

PROD_DATE	MODELS	SPEC CODE	DESCRIPTION	R/P	PART NUMBER	QYT	REV_REF FR	REV_REF TO
	+----------+							
	| 62354A | TRIM, QUARTER WINDOW INSIDE, LH							
	+----------+							
1111 - 1507	F650				62353-BZ030-	1		
1111 - 1507	F651..STD				62353-BZ030-	1		
1507 - 1607	F650				62353-BZ030-	1		
1507 - 1901	F653..LO				62353-BZ030-	1		
1901 -	F653..LO				62353-BZ030-	1		
	+----------+							
	| 62401A | CLIP (FOR CENTER PILLAR GARNISH PANEL, UPPER)							
	+----------+							
1111 - 1507	F65#				9004A-46275-	2		
1507 - 1901	F65#				9004A-46275-	2		
1901 -	F65#				9004A-46275-	2		
	+----------+							
	| 62411B | GARNISH, CENTER PILLAR, UPPER RH							
	+----------+							
1111 - 1507	F650..STD		LT.GRAY(TRIM1#)		62411-BZ160-B0	1		
1111 - 1507	F651		LT.GRAY(TRIM4#)		62411-BZ160-B0	1		
1111 - 1507	F650..LO		LT.GRAY(TRIM4#)		62411-BZ160-B0	1		
1507 - 1607	F650..STD		LT.GRAY(TRIM1#)		62411-BZ160-B0	1		
1507 - 1901	F653		LT.GRAY(TRIM4#)		62411-BZ160-B0	1		
1507 - 1901	F650..LO		LT.GRAY(TRIM4#)		62411-BZ160-B0	1		
1901 -	F65#		LT.GRAY(TRIM4#)		62411-BZ160-B0	1		
	+----------+							
	| 62412B | GARNISH, CENTER PILLAR, UPPER LH							
	+----------+							
1111 - 1507	F650..STD		LT.GRAY(TRIM1#)		62412-BZ160-B0	1		
1111 - 1507	F651		LT.GRAY(TRIM4#)		62412-BZ160-B0	1		
1111 - 1507	F650..LO		LT.GRAY(TRIM4#)		62412-BZ160-B0	1		
1507 - 1607	F650..STD		LT.GRAY(TRIM1#)		62412-BZ160-B0	1		
1507 - 1901	F653		LT.GRAY(TRIM4#)		62412-BZ160-B0	1		
1507 - 1901	F650..LO		LT.GRAY(TRIM4#)		62412-BZ160-B0	1		

FIG.64-51 INSIDE TRIM BOARD

PROD_DATE	MODELS	SPEC CODE	DESCRIPTION	R/P	PART NUMBER	QYT	REV_REF FR	REV_REF TO
	+----------+							
	| 62412B | GARNISH, CENTER PILLAR, UPPER LH							
	CONTINUED--+							
1901 -	F65#		LT.GRAY(TRIM4#)		62412-BZ160-B0	1		
	+----------+							
	| 62413A | GARNISH, CENTER PILLAR, LOWER RH							
	+----------+							
1111 - 1212	F650..STD		DK.GRAY(TRIM1#)		62413-BZ130-B0	1		
1111 - 1212	F651		-(TRIM4#)		62413-BZ130-E0	1		
1111 - 1212	F650..LO		-(TRIM4#)		62413-BZ130-E0	1		
1301 - 1507	F650..STD		DK.GRAY(TRIM1#)		62413-BZ131-B0	1		
1301 - 1507	F651		BEIGE(TRIM4#)		62413-BZ131-E0	1		
1301 - 1507	F650..LO		BEIGE(TRIM4#)		62413-BZ131-E0	1		
1507 - 1607	F650..STD		DK.GRAY(TRIM1#)		62413-BZ131-B0	1		
1507 - 1901	F653		DK.GRAY(TRIM4#)		62413-BZ131-B0	1		
1507 - 1901	F650..LO		DK.GRAY(TRIM4#)		62413-BZ131-B0	1		
1901 -	F65#		LINEN BEIGE(TRIM4#)		62413-BZ131-E1	1		
	+----------+							
	| 62414A | GARNISH, CENTER PILLAR, LOWER LH							
	+----------+							
1111 - 1212	F650..STD		DK.GRAY(TRIM1#)		62414-BZ130-B0	1		
1111 - 1212	F651		-(TRIM4#)		62414-BZ130-E0	1		
1111 - 1212	F650..LO		-(TRIM4#)		62414-BZ130-E0	1		
1301 - 1507	F650..STD		DK.GRAY(TRIM1#)		62414-BZ131-B0	1		
1301 - 1507	F651		BEIGE(TRIM4#)		62414-BZ131-E0	1		
1301 - 1507	F650..LO		BEIGE(TRIM4#)		62414-BZ131-E0	1		
1507 - 1607	F650..STD		DK.GRAY(TRIM1#)		62414-BZ131-B0	1		
1507 - 1901	F653		DK.GRAY(TRIM4#)		62414-BZ131-B0	1		
1507 - 1901	F650..LO		DK.GRAY(TRIM4#)		62414-BZ131-B0	1		
1901 -	F65#		LINEN BEIGE(TRIM4#)		62414-BZ131-E1	1		

PROD_DATE	MODELS	SPEC CODE	DESCRIPTION	R/P	PART NUMBER	QYT	REV_REF FR	REV_REF TO
	62471D GARNISH, REAR PILLAR, UPPER RH							
1111 - 1507	F651..LO		LT.GRAY(TRIM4#)		62471-BZ250-B0	1		
1507 - 1901	F653..STD		LT.GRAY(TRIM4#)		62471-BZ250-B0	1		
1901 -	F65#..STD		LT.GRAY(TRIM4#)		62471-BZ250-B0	1		
	62472D GARNISH, REAR PILLAR, UPPER LH							
1111 - 1507	F651..LO		LT.GRAY(TRIM4#)		62472-BZ250-B0	1		
1507 - 1901	F653..STD		LT.GRAY(TRIM4#)		62472-BZ250-B0	1		
1901 -	F65#..STD		LT.GRAY(TRIM4#)		62472-BZ250-B0	1		
	62472F CLIP(FOR REAR PILLAR GARNISH)							
1111 - 1507	F651..LO				9004A-46275-	6		
1507 - 1901	F653..STD				9004A-46275-	6		
1901 -	F65#..STD				9004A-46275-	6		
	62510H CLIP(FOR QUARTER TRIM FRONT PANEL)							
1111 - 1307	F650				67771-BZ060-	28		
1111 - 1307	F651..STD				67771-BZ060-	28		
1308 - 1507	F650				9004A-46275-	28		
1308 - 1507	F651..STD				9004A-46275-	28		
1507 - 1607	F650				9004A-46275-	28		
1507 - 1901	F653..LO				9004A-46275-	28		
1901 -	F653..LO				9004A-46275-	28		
	62510P PANEL ASSY, QUARTER TRIM, FRONT RH							
1111 - 1507	F650..STD		DK.GRAY(TRIM1#)		62510-BZ090-B0	1		
1111 - 1507	F650..LO		-(TRIM4#)		62510-BZ100-E0	1		
1111 - 1507	F651..STD		-(TRIM4#)		62510-BZ100-E0	1		
1507 - 1607	F650..STD		DK.GRAY(TRIM1#)		62510-BZ090-B0	1		

FIG.64-51 INSIDE TRIM BOARD

PROD_DATE	MODELS	SPEC CODE	DESCRIPTION	R/P	PART NUMBER	QYT	REV_REF FR	REV_REF TO
	62510P PANEL ASSY, QUARTER TRIM, FRONT RH CONTINUED--+							
1507 - 1607	F650..LO		DK.GRAY(TRIM4#)		62510-BZ100-B0	1		
1507 - 1901	F653..LO		DK.GRAY(TRIM4#)		62510-BZ100-B0	1		
1901 -	F653..LO		LINEN BEIGE(TRIM4#)		62510-BZ100-E1	1		
	62520P PANEL ASSY, QUARTER TRIM, FRONT LH							
1111 - 1507	F650..STD		DK.GRAY(TRIM1#)		62520-BZ070-B0	1		
1111 - 1507	F650..LO		-(TRIM4#)		62520-BZ080-E0	1		
1111 - 1507	F651..STD		-(TRIM4#)		62520-BZ080-E0	1		
1507 - 1607	F650..STD		DK.GRAY(TRIM1#)		62520-BZ070-B0	1		
1507 - 1607	F650..LO		DK.GRAY(TRIM4#)		62520-BZ080-B0	1		
1507 - 1901	F653..LO		DK.GRAY(TRIM4#)		62520-BZ080-B0	1		
1901 -	F653..LO		LINEN BEIGE(TRIM4#)		62520-BZ080-E1	1		
	62633C CLIP (FOR QUARTER TRIM GARNISH)							
1111 - 1507	F651..LO				9004A-46275-	4		
1507 - 1901	F653..STD				9004A-46275-	4		
1901 -	F65#..STD				9004A-46275-	4		
	62638 GARNISH, REAR QUARTER TRIM, FRONT RH							
1111 - 1507	F651..LO		LT.GRAY(TRIM4#)		62638-BZ020-B0	1		
1507 - 1901	F653..STD		LT.GRAY(TRIM4#)		62638-BZ020-B0	1		
1901 -	F65#..STD		LT.GRAY(TRIM4#)		62638-BZ020-B0	1		
	62639 GARNISH, REAR QUARTER TRIM, FRONT LH							
1111 - 1507	F651..LO		LT.GRAY(TRIM4#)		62639-BZ020-B0	1		
1507 - 1901	F653..STD		LT.GRAY(TRIM4#)		62639-BZ020-B0	1		
1901 -	F65#..STD		LT.GRAY(TRIM4#)		62639-BZ020-B0	1		

PROD_DATE	MODELS	SPEC CODE	DESCRIPTION	R/P	PART NUMBER	QYT	REV_REF FR	REV_REF TO
	+----------+							
	| 64730B | PANEL ASSY, DECK TRIM SIDE, RH							
	+----------+							
1111 - 1507	F651..LO		-(TRIM4#)		64730-BZ120-E0	1		
1507 - 1901	F653..STD		DK.GRAY(TRIM4#)		64730-BZ120-B0	1		
1901 -	F65#..STD		LINEN BEIGE(TRIM4#)		64730-BZ120-E1	1		
	+----------+							
	| 64740C | PANEL ASSY, DECK TRIM SIDE, LH							
	+----------+							
1111 - 1507	F651..LO		-(TRIM4#)		64740-BZ120-E0	1		
1507 - 1901	F653..STD		DK.GRAY(TRIM4#)		64740-BZ120-B0	1		
1901 -	F65#..STD		LINEN BEIGE(TRIM4#)		64740-BZ120-E1	1		
	+----------+							
	| 64750F | CLIP(FOR DECK SIDE TRIM PANEL)							
	+----------+							
1111 - 1507	F651..LO				9004A-46275-	16		
1507 - 1901	F653..STD				9004A-46275-	16		
1901 -	F65#..STD				9004A-46275-	16		
	+----------+							
	| 67913B | PLATE, FRONT DOOR SCUFF, RH							
	+----------+							
1111 - 1507	F650..STD		DK.GRAY(TRIM1#)		67913-BZ110-B0	1		
1111 - 1507	F651		-(TRIM4#)		67913-BZ110-E0	1		
1111 - 1507	F650..LO		-(TRIM4#)		67913-BZ110-E0	1		
1507 - 1607	F650..STD		DK.GRAY(TRIM1#)		67913-BZ110-B0	1		
1507 - 1901	F653		DK.GRAY(TRIM4#)		67913-BZ110-B0	1		
1507 - 1901	F650..LO		DK.GRAY(TRIM4#)		67913-BZ110-B0	1		
1901 -	F65#		LINEN BEIGE(TRIM4#)		67913-BZ110-E1	1		
	+----------+							
	| 67914B | PLATE, FRONT DOOR SCUFF, LH							
	+----------+							
1111 - 1507	F650..STD		DK.GRAY(TRIM1#)		67914-BZ110-B0	1		
1111 - 1507	F651		-(TRIM4#)		67914-BZ110-E0	1		
1111 - 1507	F650..LO		-(TRIM4#)		67914-BZ110-E0	1		
1507 - 1607	F650..STD		DK.GRAY(TRIM1#)		67914-BZ110-B0	1		

FIG.64-51 INSIDE TRIM BOARD

PROD_DATE	MODELS	SPEC CODE	DESCRIPTION	R/P	PART NUMBER	QYT	REV_REF FR	REV_REF TO
	+----------+							
	| 67914B | PLATE, FRONT DOOR SCUFF, LH							
	CONTINUED--+							
1507 - 1901	F653		DK.GRAY(TRIM4#)		67914-BZ110-B0	1		
1507 - 1901	F650..LO		DK.GRAY(TRIM4#)		67914-BZ110-B0	1		
1901 -	F65#		LINEN BEIGE(TRIM4#)		67914-BZ110-E1	1		
	+----------+							
	| 67917C | PLATE, REAR DOOR SCUFF, RH							
	+----------+							
1111 - 1507	F651..LO		-(TRIM4#)		67917-BZ110-E0	1		
1111 - 1507	F650..STD		DK.GRAY(TRIM1#)		67917-BZ120-B0	1		
1111 - 1507	F650..LO		-(TRIM4#)		67917-BZ120-E0	1		
1111 - 1507	F651..STD		-(TRIM4#)		67917-BZ120-E0	1		
1507 - 1607	F650..STD		DK.GRAY(TRIM1#)		67917-BZ120-B0	1		
1507 - 1901	F653..STD		DK.GRAY(TRIM4#)		67917-BZ110-B0	1		
1507 - 1901	F65#..LO		DK.GRAY(TRIM4#)		67917-BZ120-B0	1		
1901 -	F65#..STD		LINEN BEIGE(TRIM4#)		67917-BZ110-E1	1		
1901 -	F653..LO		LINEN BEIGE(TRIM4#)		67917-BZ120-E1	1		
	+----------+							
	| 67918D | PLATE, REAR DOOR SCUFF, LH							
	+----------+							
1111 - 1507	F651..LO		-(TRIM4#)		67918-BZ110-E0	1		
1111 - 1507	F650..STD		DK.GRAY(TRIM1#)		67918-BZ120-B0	1		
1111 - 1507	F650..LO		-(TRIM4#)		67918-BZ120-E0	1		
1111 - 1507	F651..STD		-(TRIM4#)		67918-BZ120-E0	1		
1507 - 1607	F650..STD		DK.GRAY(TRIM1#)		67918-BZ120-B0	1		
1507 - 1901	F653..STD		DK.GRAY(TRIM4#)		67918-BZ110-B0	1		
1507 - 1901	F65#..LO		DK.GRAY(TRIM4#)		67918-BZ120-B0	1		
1901 -	F65#..STD		LINEN BEIGE(TRIM4#)		67918-BZ110-E1	1		
1901 -	F653..LO		LINEN BEIGE(TRIM4#)		67918-BZ120-E1	1		

FIG. 64-52 ROOF HEADLINING & SILENCER PAD

(1111-1507)F651 ; (1507-)F653, 654 ; (1507-)F650..LO

W/AC

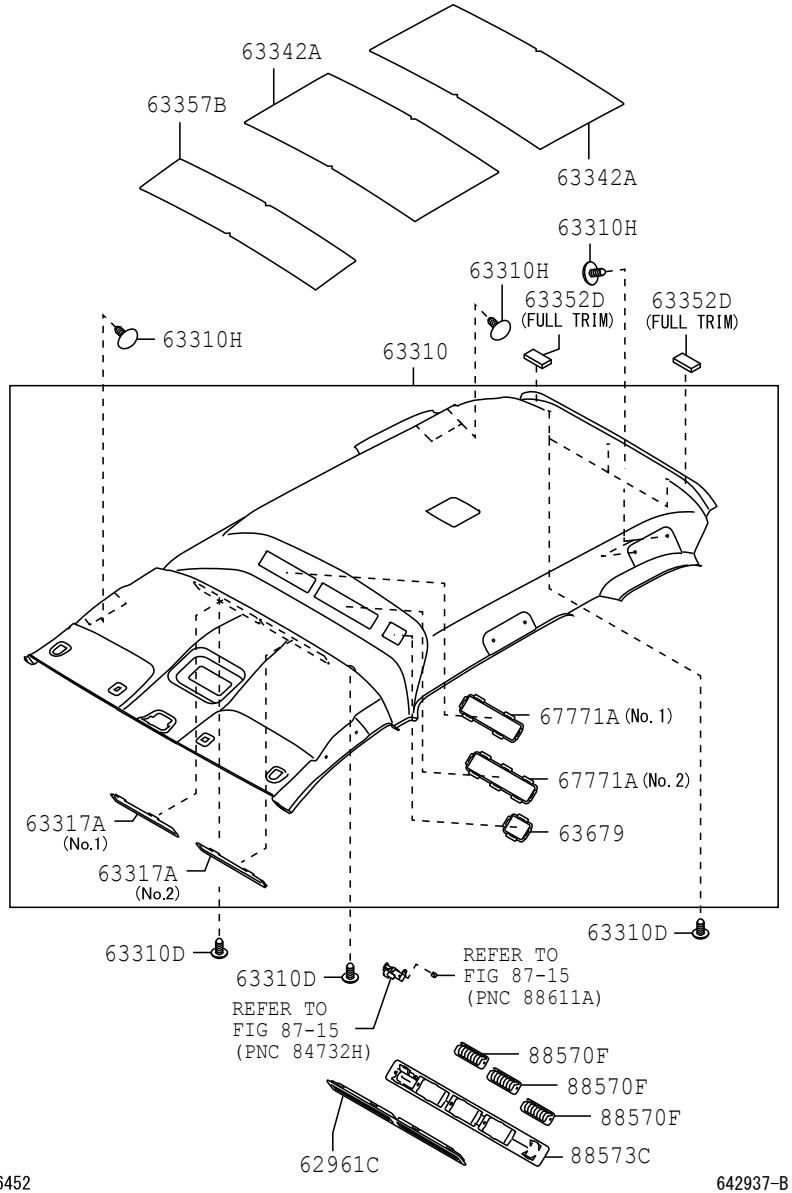

6452 642937-B

FIG. 64-52 ROOF HEADLINING & SILENCER PAD

(1111-1507)F650 ; (1507-1607)F650..STD

L/AC

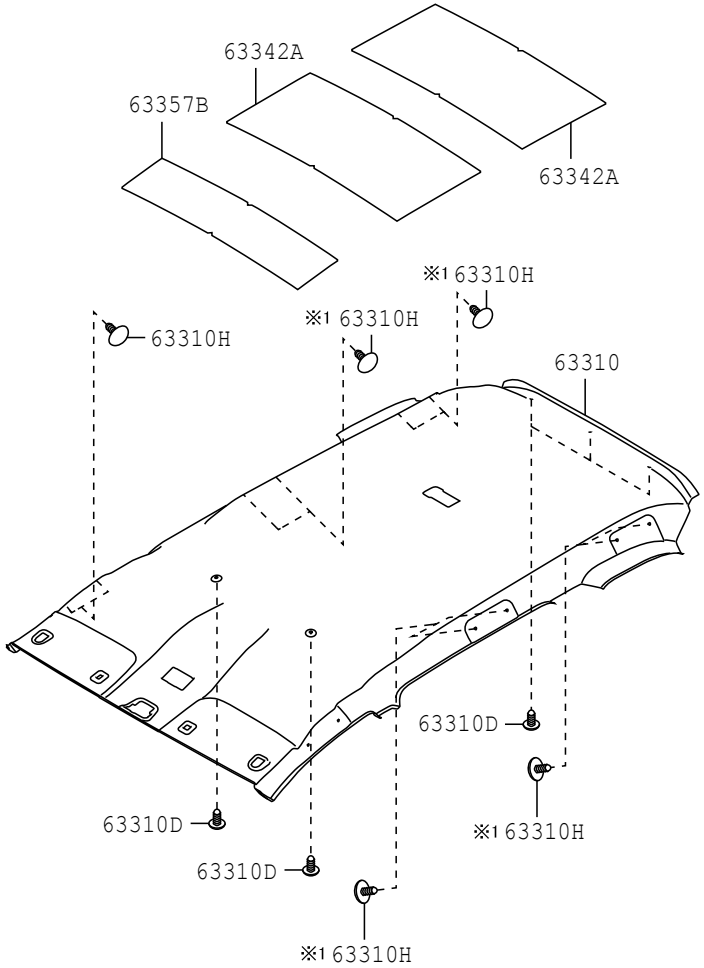

※1 W/O ASSIST GRIP

6452 642939

PROD_DATE	MODELS	SPEC CODE	DESCRIPTION	R/P	PART NUMBER	QYT	REV_REF FR	REV_REF TO
	+----------+							
	| 62961C | GRILLE, ROOM VENT							
	+----------+							
1111 - 1507	F651		LT.GRAY(TRIM4#)		62961-BZ010-B1	1		
1507 - 1901	F653		LT.GRAY(TRIM4#)		62961-BZ010-B1	1		
1507 - 1901	F650..LO		LT.GRAY(TRIM4#)		62961-BZ010-B1	1		
1901 -	F65#		LT.GRAY(TRIM4#)		62961-BZ010-B1	1		
	+----------+							
	| 63310 | HEADLINING ASSY, ROOF							
	+----------+							
1111 - 1507	F651		LT.GRAY(TRIM4#)		63310-BZ370-B0	1		
1111 - 1507	F650..STD		LT.GRAY(TRIM1#)		63310-BZ410-B0	1		
1111 - 1507	F650..LO		LT.GRAY(TRIM4#)		63310-BZ410-B0	1		
1507 - 1607	F650..STD		LT.GRAY(TRIM1#)		63310-BZ410-B0	1		
1507 - 1901	F653		LT.GRAY(TRIM4#)		63310-BZ370-B0	1		
1507 - 1901	F650..LO		LT.GRAY(TRIM4#)		63310-BZ370-B0	1		
1901 -	F65#		LT.GRAY(TRIM4#)		63310-BZ370-B0	1		
	+----------+							
	| 63310D | CLIP, ROOF HEADLINING							
	+----------+							
1111 - 1507	F650..STD		LT.GRAY(TRIM1#)		90467-05164-P5	5		
1111 - 1507	F651		LT.GRAY(TRIM4#)		90467-05164-P5	5		
1111 - 1507	F650..LO		LT.GRAY(TRIM4#)		90467-05164-P5	5		
1507 - 1510	F650..STD		LT.GRAY(TRIM1#)		90467-05164-P5	5		
1507 - 1510	F653		LT.GRAY(TRIM4#)		90467-05164-P5	5		
1507 - 1510	F650..LO		LT.GRAY(TRIM4#)		90467-05164-P5	5		
1511 - 1607	F650..STD		LT.GRAY(TRIM1#)		9004A-46358-B0	5		
				#	(90467-05164-P5)	1		
1511 - 1901	F653		LT.GRAY(TRIM4#)		9004A-46358-B0	5		
				#	(90467-05164-P5)	1		
1511 - 1901	F650..LO		LT.GRAY(TRIM4#)		9004A-46358-B0	5		
				#	(90467-05164-P5)	1		
1901 -	F65#		LT.GRAY(TRIM4#)		9004A-46358-B0	5		
				#	(90467-05164-P5)	1		

FIG.64-52 ROOF HEADLINING & SILENCER PAD

PROD_DATE	MODELS	SPEC CODE	DESCRIPTION	R/P	PART NUMBER	QYT	REV_REF FR	REV_REF TO
	+----------+							
	| 63310H | CLIP(FOR ROOF HEADLINING)							
	+----------+							
1111 - 1507	F651		LT.GRAY(TRIM4#)		90044-67467-B6	6		
1111 - 1507	F650..STD		LT.GRAY(TRIM1#)		90044-67467-B6	10		
1111 - 1507	F650..LO		LT.GRAY(TRIM4#)		90044-67467-B6	6		
1507 - 1510	F653		LT.GRAY(TRIM4#)		90044-67467-B6	6		
1507 - 1510	F650..STD		LT.GRAY(TRIM1#)		90044-67467-B6	10		
1507 - 1510	F650..LO		LT.GRAY(TRIM4#)		90044-67467-B6	6		
1511 - 1607	F650..STD		LT.GRAY(TRIM1#)		9004A-46357-B0	10		
				#	(90044-67467-B6)	1		
1511 - 1901	F653		LT.GRAY(TRIM4#)		9004A-46357-B0	6		
				#	(90044-67467-B6)	1		
1511 - 1901	F650..LO		LT.GRAY(TRIM4#)		9004A-46357-B0	6		
				#	(90044-67467-B6)	1		
1901 -	F65#		LT.GRAY(TRIM4#)		9004A-46357-B0	6		
				#	(90044-67467-B6)	1		
	+----------+							
	| 63317A | RETAINER, ROOF HEADLINING							
	+----------+							
1111 - 1507	F651		NO.1		63317-BZ010-	1		
1111 - 1507	F651		NO.2		63317-BZ020-	1		
1507 - 1901	F653		NO.1		63317-BZ010-	1		
1507 - 1901	F650..LO		NO.1		63317-BZ010-	1		
1507 - 1901	F653		NO.2		63317-BZ020-	1		
1507 - 1901	F650..LO		NO.2		63317-BZ020-	1		
1901 -	F65#		NO.1		63317-BZ010-	1		
1901 -	F65#		NO.2		63317-BZ020-	1		
	+----------+							
	| 63342A | SILENCER, ROOF, NO.2							
	+----------+							
1111 - 1507	F65#				63342-BZ070-	2		
1507 - 1901	F65#				63342-BZ070-	2		
1901 -	F65#				63342-BZ071-	2		

PROD_DATE	MODELS	SPEC CODE	DESCRIPTION	R/P	PART NUMBER	QYT	REV_REF FR	REV_REF TO
	+----------+							
	| 63352D | PAD, ROOF HEADLINING, NO.2							
	+----------+							
1203 - 1507	F651..LO				63352-BZ040-	2		
1507 - 1901	F653..STD				63352-BZ040-	2		
1901 -	F65#..STD				63352-BZ040-	2		
	+----------+							
	| 63357B | SILENCER, RO							
	+----------+ OF							
1111 - 1507	F65#				63357-BZ040-	1		
1507 - 1607	F650				63357-BZ040-	1		
1507 - 1901	F653				63357-BZ040-	1		
1901 -	F65#				63357-BZ040-	1		
	+----------+							
	| 63679 | RETAINER, ROOF HEADLINING							
	+----------+							
1111 - 1507	F651				63317-BZ050-	1		
1507 - 1901	F653				63317-BZ050-	1		
1507 - 1901	F650..LO				63317-BZ050-	1		
1901 -	F65#				63317-BZ050-	1		
	+----------+							
	| 67771A | RETAINER, ROOF HEADLINING							
	+----------+							
1111 - 1507	F651		NO.1		63317-BZ030-	1		
1111 - 1507	F651		NO.2		63317-BZ040-	1		
1507 - 1901	F653		NO.1		63317-BZ030-	1		
1507 - 1901	F650..LO		NO.1		63317-BZ030-	1		
1507 - 1901	F653		NO.2		63317-BZ040-	1		
1507 - 1901	F650..LO		NO.2		63317-BZ040-	1		
1901 -	F65#		NO.1		63317-BZ030-	1		
1901 -	F65#		NO.2		63317-BZ040-	1		
	+----------+							
	| 88570F | GRILLE ASSY, AIR OUTLET							
	+----------+							
1111 - 1507	F651		LT.GRAY(TRIM4#)		87125-BZ030-B1	3		

FIG.64-52 ROOF HEADLINING & SILENCER PAD

PROD_DATE	MODELS	SPEC CODE	DESCRIPTION	R/P	PART NUMBER	QYT	REV_REF FR	REV_REF TO
	+----------+							
	| 88570F | GRILLE ASSY, AIR OUTLET							
	CONTINUED--+							
1507 - 1901	F653		LT.GRAY(TRIM4#)		87125-BZ030-B1	3		
1507 - 1901	F650..LO		LT.GRAY(TRIM4#)		87125-BZ030-B1	3		
1901 -	F65#		LT.GRAY(TRIM4#)		87125-BZ030-B1	3		
	+----------+							
	| 88573C | BASE, GRILLE							
	+----------+							
1111 - 1507	F651		LT.GRAY(TRIM4#)		88573-BZ010-B1	1		
1507 - 1901	F653		LT.GRAY(TRIM4#)		88573-BZ010-B1	1		
1507 - 1901	F650..LO		LT.GRAY(TRIM4#)		88573-BZ010-B1	1		
1901 -	F65#		LT.GRAY(TRIM4#)		88573-BZ010-B1	1		

FIG.65-54 REAR BODY SIDE PANEL

(1111-)

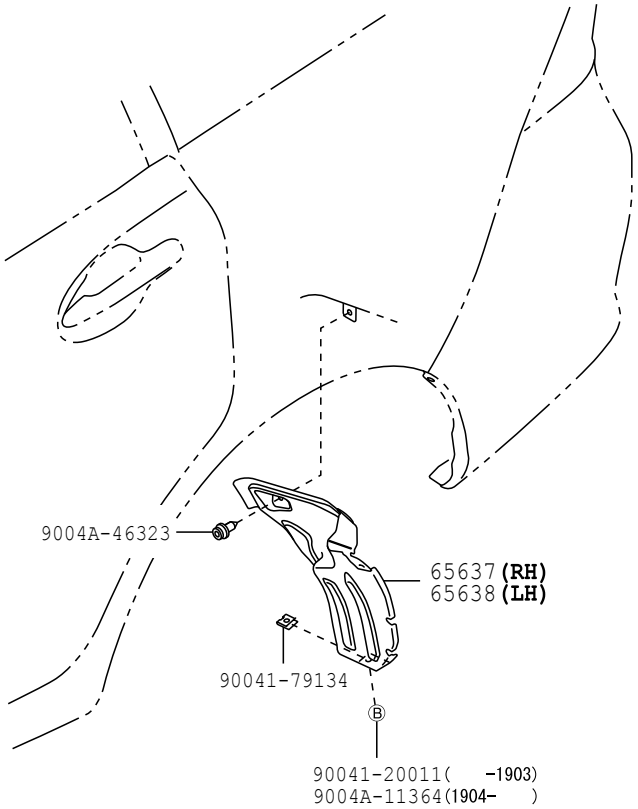

6554

651098-D

FIG.65-54 REAR BODY SIDE PANEL

PROD_DATE	MODELS	SPEC CODE	DESCRIPTION	R/P	PART NUMBER	QYT	REV_REF FR	REV_REF TO
	65637	LINER, REAR WHEEL HOUSE, RH						
1111 - 1204	F65#				65637-BZ160-	1		
1205 - 1507	F65#				65637-BZ161-	1		
1507 - 1607	F650				65637-BZ161-	1		
1507 - 1901	F653				65637-BZ161-	1		
1901 -	F65#				65637-BZ161-	1		
	65638	LINER, REAR WHEEL HOUSE, LH						
1111 - 1204	F65#				65638-BZ160-	1		
1205 - 1507	F65#				65638-BZ161-	1		
1507 - 1607	F650				65638-BZ161-	1		
1507 - 1901	F653				65638-BZ161-	1		
1901 -	F65#				65638-BZ161-	1		

(1111-)

DOOR PANEL

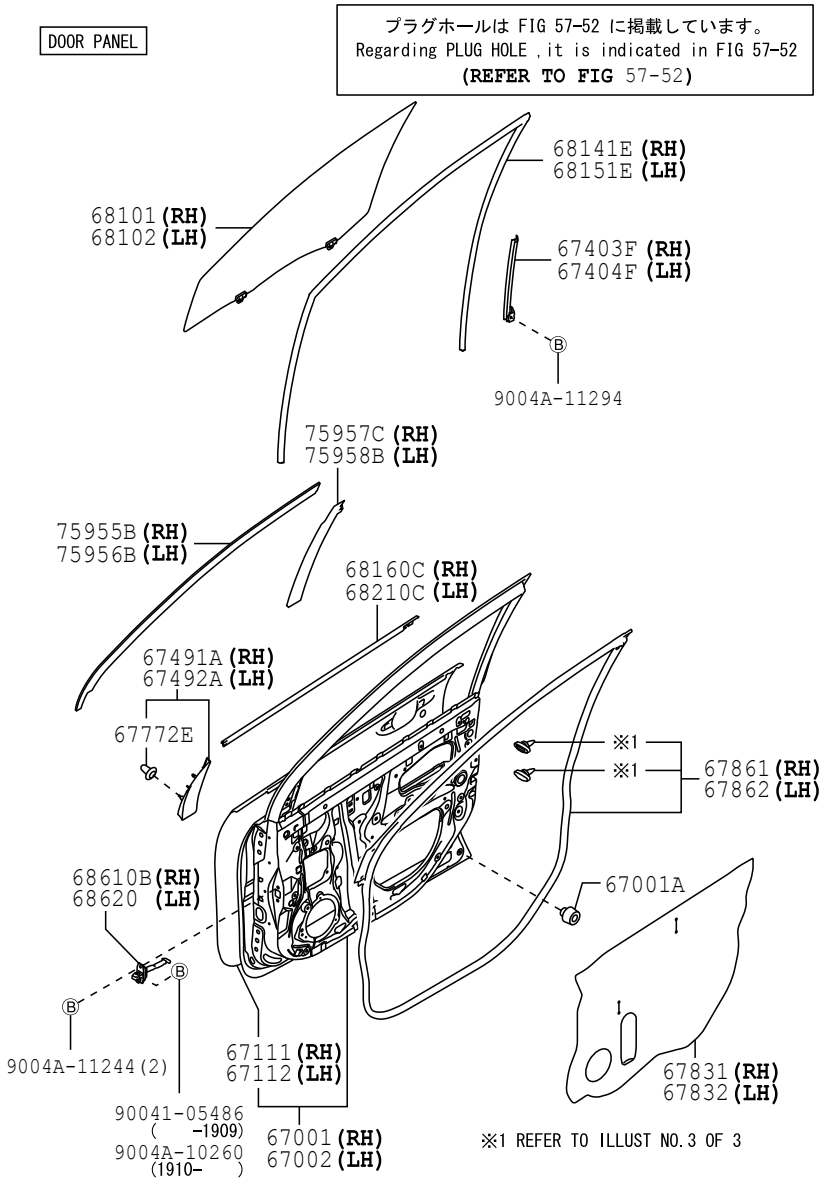

6751 677115-F

FIG.67-51 FRONT DOOR PANEL & GLASS

(1111-)

DOOR TRIM

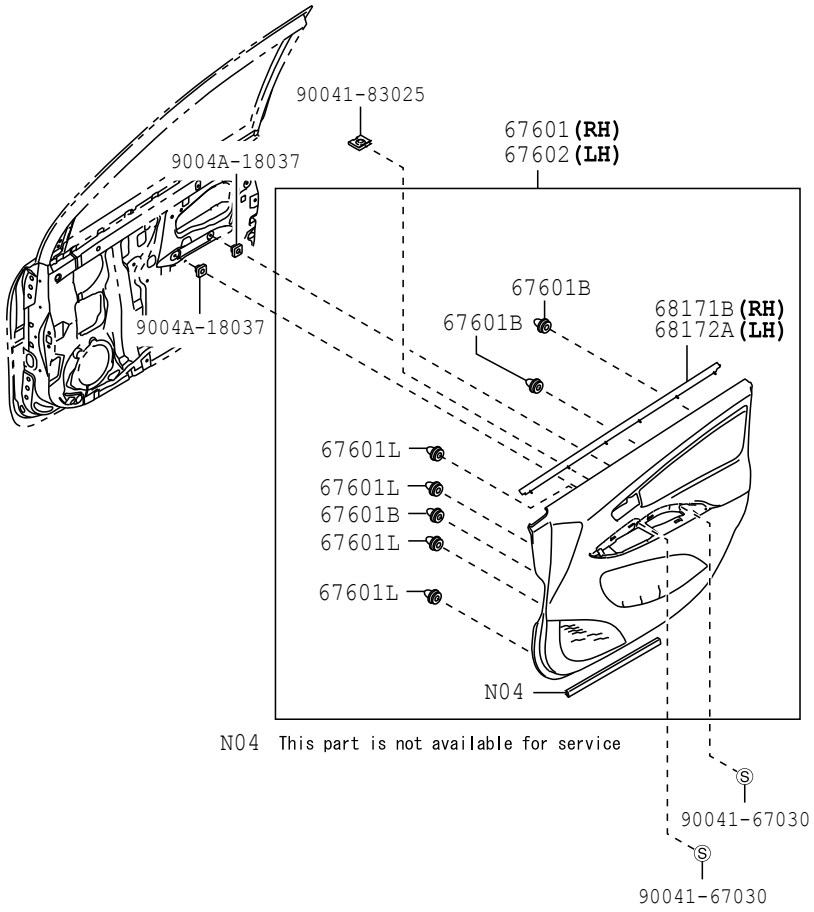

6751 677116-D

(1111-)

WETHERSTRIP RETAINER & CLIP

WEATHERSTRIP RETAINER & CLIP

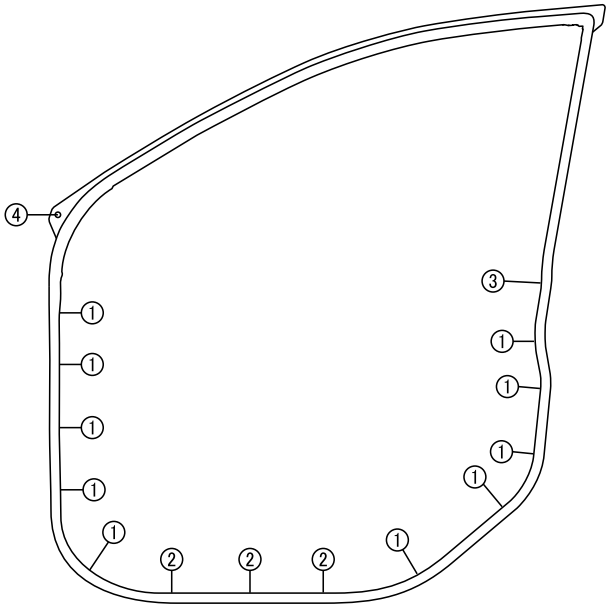

	PART NO.	SHAPE		PART NO.	SHAPE
①	67867G **(RH)**	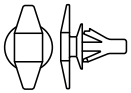	③	67861A	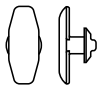
	67868L **(LH)**				
②	67867C **(RH)**	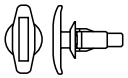	④	67869E	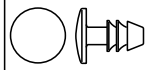
	67868C **(LH)**				

6751

677117

PROD_DATE	MODELS	SPEC CODE	DESCRIPTION	R/P	PART NUMBER	QYT	REV_REF FR	REV_REF TO
	67001	PANEL SUB-ASSY, FRONT DOOR, RH						
1111 - 1507	F65#				67001-BZ300-	1		
1507 - 1901	F65#				67001-BZ520-	1		
1901 - 1908	F65#				67001-BZ580-	1		
1908 -	F65#				67001-BZ600-	1		
	67001A	CUSHION, FRONT DOOR PANEL						
1111 - 1507	F65#				90541-09069-	4		
1507 - 1607	F650				90541-09069-	4		
1507 - 1901	F653				90541-09069-	4		
1901 -	F65#				90541-09069-	4		
	67002	PANEL SUB-ASSY, FRONT DOOR, LH						
1111 - 1507	F65#				67002-BZ310-	1		
1507 - 1602	F65#				67002-BZ510-	1		
1602 - 1901	F65#				67002-BZ630-	1		
1901 - 1907	F65#				67002-BZ580-	1		
1908 -	F65#				67002-BZ660-	1		
	67111	PANEL, FRONT DOOR, OUTER RH						
1111 - 1507	F65#				67111-BZ210-	1		
1507 - 1901	F65#				67111-BZ210-	1		
1901 -	F65#				67111-BZ210-	1		
	67112	PANEL, FRONT DOOR, OUTER LH						
1111 - 1507	F65#				67112-BZ220-	1		
1507 - 1901	F65#				67112-BZ220-	1		
1901 -	F65#				67112-BZ220-	1		

PROD_DATE	MODELS	SPEC CODE	DESCRIPTION	R/P	PART NUMBER	QYT	REV_REF FR	REV_REF TO
	+----------+							
	| 67403F | FRAME SUB-ASSY, FRONT DOOR, REAR LOWER RH							
	+----------+							
1111 - 1507	F65#				67403-BZ090-	1		
1507 - 1607	F650				67403-BZ090-	1		
1507 - 1901	F653				67403-BZ090-	1		
1901 -	F65#				67403-BZ090-	1		
	+----------+							
	| 67404F | FRAME SUB-ASSY, FRONT DOOR, REAR LOWER LH							
	+----------+							
1111 - 1507	F65#				67404-BZ090-	1		
1507 - 1607	F650				67404-BZ090-	1		
1507 - 1901	F653				67404-BZ090-	1		
1901 -	F65#				67404-BZ090-	1		
	+----------+							
	| 67491A | GARNISH, FRONT DOOR LOWER FRAME BRACKET,							
	+----------+ RH							
1111 - 1507	F65#				67491-BZ070-	1		
1507 - 1607	F650				67491-BZ070-	1		
1507 - 1901	F653				67491-BZ070-	1		
1901 -	F65#				67491-BZ070-	1		
	+----------+							
	| 67492A | GARNISH, FRONT DOOR LOWER FRAME BRACKET,							
	+----------+ LH							
1111 - 1507	F65#				67492-BZ070-	1		
1507 - 1607	F650				67492-BZ070-	1		
1507 - 1901	F653				67492-BZ070-	1		
1901 -	F65#				67492-BZ070-	1		
	+----------+							
	| 67601 | BOARD SUB-ASSY, FRONT DOOR TRIM, RH							
	+----------+							
1111 - 1212	F650..STD		DK.GRAY(TRIM1#)		67605-BZ330-B2	1		
1111 - 1212	F651..STD		-(TRIM4#)		67605-BZ330-E0	1		
1111 - 1212	F65#..LO		-(TRIM4#)		67605-BZ340-E0	1		
1301 - 1305	F650..STD		DK.GRAY(TRIM1#)		67605-BZ331-B2	1		2

FIG.67-51 FRONT DOOR PANEL & GLASS

PROD_DATE	MODELS	SPEC CODE	DESCRIPTION	R/P	PART NUMBER	QYT	REV_REF FR	REV_REF TO
	+----------+							
	| 67601 | BOARD SUB-ASSY, FRONT DOOR TRIM, RH							
	CONTINUED--+							
1301 - 1305	F651..STD		BEIGE(TRIM4#)		67605-BZ331-E0	1		2
1301 - 1305	F65#..LO		BEIGE(TRIM4#)		67605-BZ341-E0	1		
1305 - 1408	F650..STD		DK.GRAY(TRIM1#),W/SEAL,FR DOOR TRIM		67605-BZ332-B2	1	3	
1305 - 1507	F651		BEIGE(TRIM4#)		67605-BZ320-E0	1		
1305 - 1507	F650..LO		BEIGE(TRIM4#)		67605-BZ320-E0	1		
1409 - 1507	F650..STD		DK.GRAY(TRIM1#),W/SEAL,FR DOOR TRIM		67605-BZ480-B0	1		
1507 - 1508	F650				67605-BZ520-	1		
1507 - 1508	F653..LO				67605-BZ520-	1		
1508 - 1607	F650..STD		DK.GRAY(TRIM1#)		67605-BZ520-B0	1		
1507 - 1901	F653..STD		DK.GRAY(TRIM4#)		67605-BZ510-B0	1		
1508 - 1901	F65#..LO		DK.GRAY(TRIM4#)		67605-BZ520-B0	1		
1901 -	F653..LO		LINEN BEIGE(TRIM4#)		67605-BZ520-E0	1		
1901 -	F65#..STD		LINEN BEIGE(TRIM4#),W/SEAL,FR DOOR TRIM		67605-BZ590-E0	1		
	+----------+							
	| 67601B | CLIP(FOR FRONT DOOR TRIM BOARD)							
	+----------+							
1111 - 1507	F65#				9004A-46275-	6		
1507 - 1901	F65#				9004A-46275-	6		
1901 -	F65#				9004A-46275-	6		
	+----------+							
	| 67601L | CLIP(FOR FRONT DOOR TRIM BOARD)							
	+----------+							
1111 - 1507	F65#				9004A-46302-	8		
1507 - 1901	F65#				9004A-46302-	8		
1901 -	F65#				9004A-46302-	8		
	+----------+							
	| 67602 | BOARD SUB-ASSY, FRONT DOOR TRIM, LH							
	+----------+							
1111 - 1212	F650..STD		DK.GRAY(TRIM1#)		67606-BZ330-B2	1		

PROD_DATE	MODELS	SPEC CODE	DESCRIPTION	R/P	PART NUMBER	QYT	REV_REF FR	REV_REF TO
	+----------+							
	| 67602 | BOARD SUB-ASSY, FRONT DOOR TRIM, LH							
	CONTINUED--+							
1111 - 1212	F651..STD		-(TRIM4#)		67606-BZ330-E0	1		
1111 - 1212	F65#..LO		-(TRIM4#)		67606-BZ340-E0	1		
1301 - 1305	F650..STD		DK.GRAY(TRIM1#)		67606-BZ331-B2	1		2
1301 - 1305	F651..STD		BEIGE(TRIM4#)		67606-BZ331-E0	1		2
1301 - 1305	F65#..LO		BEIGE(TRIM4#)		67606-BZ341-E0	1		
1305 - 1408	F650..STD		DK.GRAY(TRIM1#),W/SEAL,FR DOOR TRIM		67606-BZ332-B2	1	3	
1305 - 1507	F651		BEIGE(TRIM4#)		67606-BZ420-E0	1		
1305 - 1507	F650..LO		BEIGE(TRIM4#)		67606-BZ420-E0	1		
1409 - 1507	F650..STD		DK.GRAY(TRIM1#),W/SEAL,FR DOOR TRIM		67606-BZ500-B0	1		
1507 - 1508	F650				67606-BZ540-	1		
1507 - 1508	F653..LO				67606-BZ540-	1		
1508 - 1607	F650..STD		DK.GRAY(TRIM1#)		67606-BZ540-B0	1		
1507 - 1901	F653..STD		DK.GRAY(TRIM4#)		67606-BZ530-B0	1		
1508 - 1901	F65#..LO		DK.GRAY(TRIM4#)		67606-BZ540-B0	1		
1901 -	F653..LO		LINEN BEIGE(TRIM4#)		67606-BZ540-E0	1		
1901 -	F65#..STD		LINEN BEIGE(TRIM4#),W/SEAL,FR DOOR TRIM		67606-BZ590-E0	1		
	+----------+							
	| 67772E | CAP, FRONT DOOR TRIM RETAINER							
	+----------+							
1111 - 1507	F65#				67772-87Z02-	2		
1507 - 1607	F650				67772-87Z02-	2		
1507 - 1901	F653				67772-87Z02-	2		
1901 -	F65#				67772-87Z02-	2		
	+----------+							
	| 67831 | COVER, FRONT DOOR SERVICE HOLE, RH							
	+----------+							
1111 - 1507	F65#				67831-BZ240-	1		

FIG.67-51 FRONT DOOR PANEL & GLASS

PROD_DATE	MODELS	SPEC CODE	DESCRIPTION	R/P	PART NUMBER	QYT	REV_REF FR	REV_REF TO
	+----------+							
	| 67831 | COVER, FRONT DOOR SERVICE HOLE, RH							
	CONTINUED--+							
1507 - 1607	F650				67831-BZ240-	1		
1507 - 1901	F653				67831-BZ240-	1		
1901 -	F65#				67831-BZ240-	1		
	+----------+							
	| 67832 | COVER, FRONT DOOR SERVICE HOLE, LH							
	+----------+							
1111 - 1507	F65#				67831-BZ240-	1		
1507 - 1607	F650				67831-BZ240-	1		
1507 - 1901	F653				67831-BZ240-	1		
1901 -	F65#				67831-BZ240-	1		
	+----------+							
	| 67861 | WEATHERSTRIP, FRONT DOOR, RH							
	+----------+							
1111 - 1507	F65#				67861-BZ130-	1		
1507 - 1607	F650				67861-BZ130-	1		
1507 - 1901	F653				67861-BZ130-	1		
1901 -	F65#				67861-BZ130-	1		
	+----------+							
	| 67861A | RETAINER(FOR FRONT DOOR WEATHERSTRIP)							
	+----------+							
1111 - 1507	F65#				67867-BZ020-	2		
1507 - 1607	F650				67867-BZ020-	2		
1507 - 1901	F653				67867-BZ020-	2		
1901 -	F65#				67867-BZ020-	2		
	+----------+							
	| 67862 | WEATHERSTRIP, FRONT DOOR, LH							
	+----------+							
1111 - 1507	F65#				67862-BZ110-	1		
1507 - 1607	F650				67862-BZ110-	1		
1507 - 1901	F653				67862-BZ110-	1		
1901 -	F65#				67862-BZ110-	1		

PROD_DATE	MODELS	SPEC CODE	DESCRIPTION	R/P	PART NUMBER	QYT	REV_REF FR	REV_REF TO
	67867C		RETAINER, FRONT DOOR WEATHERSTRIP, RH					
1111 - 1507	F65#				67867-97209-	3		
1507 - 1607	F650				67867-97209-	3		
1507 - 1901	F653				67867-97209-	3		
1901 -	F65#				67867-97209-	3		
	67867G		RETAINER, DOOR WEATHERSTRIP, RH					
1111 - 1507	F65#				67867-BZ010-	10		
1507 - 1607	F650				67867-BZ010-	10		
1507 - 1901	F653				67867-BZ010-	10		
1901 -	F65#				67867-BZ010-	10		
	67868C		RETAINER, FRONT DOOR WEATHERSTRIP, LH					
1111 - 1507	F65#				67868-97207-	3		
1507 - 1607	F650				67868-97207-	3		
1507 - 1901	F653				67868-97207-	3		
1901 -	F65#				67868-97207-	3		
	67868L		RETAINER, DOOR WEATHERSTRIP, LH					
1111 - 1507	F65#				67868-BZ010-	10		
1507 - 1607	F650				67868-BZ010-	10		
1507 - 1901	F653				67868-BZ010-	10		
1901 -	F65#				67868-BZ010-	10		
	67869E		CLIP, FRONT DOOR WEATHERSTRIP					
1111 - 1507	F65#				67868-30030-	2		
1507 - 1607	F650				67868-30030-	2		
1507 - 1901	F653				67868-30030-	2		
1901 -	F65#				67868-30030-	2		

FIG.67-51 FRONT DOOR PANEL & GLASS

PROD_DATE	MODELS	SPEC CODE	DESCRIPTION	R/P	PART NUMBER	QYT	REV_REF FR	REV_REF TO
	68101		GLASS SUB-ASSY, FRONT DOOR, RH					
1111 - 1202	F65#		T=3.1,GREEN		68101-BZ220-	1		
1203 - 1507	F65#		T=3.1,GREEN		68101-BZ221-	1		
1507 - 1607	F650		T=3.1,GREEN		68101-BZ221-	1		
1507 - 1901	F653		T=3.1,GREEN		68101-BZ221-	1		
1901 -	F65#		T=3.1,GREEN		68101-BZ221-	1		
	68102		GLASS SUB-ASSY, FRONT DOOR, LH					
1111 - 1202	F65#		T=3.1,GREEN		68102-BZ210-	1		
1203 - 1507	F65#		T=3.1,GREEN		68102-BZ211-	1		
1507 - 1607	F650		T=3.1,GREEN		68102-BZ211-	1		
1507 - 1901	F653		T=3.1,GREEN		68102-BZ211-	1		
1901 -	F65#		T=3.1,GREEN		68102-BZ211-	1		
	68141E		RUN, FRONT DOOR GLASS, RH					
1111 - 1507	F65#				68141-BZ090-	1		
1507 - 1607	F650				68141-BZ090-	1		
1507 - 1901	F653				68141-BZ090-	1		
1901 -	F65#				68141-BZ090-	1		
	68151E		RUN, FRONT DOOR GLASS, LH					
1111 - 1507	F65#				68151-BZ090-	1		
1507 - 1607	F650				68151-BZ090-	1		
1507 - 1901	F653				68151-BZ090-	1		
1901 -	F65#				68151-BZ090-	1		
	68160C		WEATHERSTRIP ASSY, FRONT DOOR GLASS, OUTER RH					
1111 - 1507	F65#				68160-BZ040-	1		
1507 - 1607	F650				68160-BZ040-	1		

PROD_DATE	MODELS	SPEC CODE	DESCRIPTION	R/P	PART NUMBER	QYT	REV_REF FR	REV_REF TO
	+----------+							
	| 68160C | WEATHERSTRIP ASSY, FRONT DOOR GLASS, OUTER RH							
	CONTINUED--+							
1507 - 1901	F653				68160-BZ040-	1		
1901 -	F65#				68160-BZ040-	1		
	+----------+							
	| 68171B | WEATHERSTRIP, FRONT DOOR GLASS, INNER RH							
	+----------+							
1111 - 1507	F65#				68171-BZ130-	1		
1507 - 1607	F650				68171-BZ130-	1		
1507 - 1901	F653				68171-BZ130-	1		
1901 -	F65#				68171-BZ130-	1		
	+----------+							
	| 68172A | WEATHERSTRIP, FRONT DOOR GLASS, INNER LH							
	+----------+							
1111 - 1507	F65#				68171-BZ130-	1		
1507 - 1607	F650				68171-BZ130-	1		
1507 - 1901	F653				68171-BZ130-	1		
1901 -	F65#				68171-BZ130-	1		
	+----------+							
	| 68210C | WEATHERSTRIP ASSY, FRONT DOOR GLASS, OUTER LH							
	+----------+							
1111 - 1507	F65#				68210-BZ030-	1		
1507 - 1607	F650				68210-BZ030-	1		
1507 - 1901	F653				68210-BZ030-	1		
1901 -	F65#				68210-BZ030-	1		
	+----------+							
	| 68610B | CHECK ASSY, FRONT DOOR, RH							
	+----------+							
1111 - 1507	F65#				68610-BZ130-	1		
1507 - 1607	F650				68610-BZ130-	1		
1507 - 1901	F653				68610-BZ130-	1		
1901 -	F65#				68610-BZ130-	1		

FIG.67-51 FRONT DOOR PANEL & GLASS

PROD_DATE	MODELS	SPEC CODE	DESCRIPTION	R/P	PART NUMBER	QYT	REV_REF FR	REV_REF TO
	+----------+							
	| 68620 | CHECK ASSY, FRONT DOOR, LH							
	+----------+							
1111 - 1507	F65#				68610-BZ130-	1		
1507 - 1607	F650				68610-BZ130-	1		
1507 - 1901	F653				68610-BZ130-	1		
1901 -	F65#				68610-BZ130-	1		
	+----------+							
	| 75955B | TAPE, BLACK OUT FRONT DOOR, OUTER UPPER R							
	+----------+ H							
1111 - 1507	F65#..LO		TUYAKESI BLACK DUMMY (1E7 ,1H2 ,B72 ,R56 ,S37 ,T23 ,W09)		75955-BZ040-C0	1		
1507 - 1901	F653..STD		TUYAKESI BLACK DUMMY (1E7 ,1G3 ,3Q3 ,4U3 ,8X2 ,T23 ,W09)		75955-BZ040-C0	1		
1901 -	F65#..STD		TUYAKESI BLACK DUMMY (1E7 ,1G3 ,3Q3 ,4T3 ,B79 ,W09 ,W24)		75955-BZ040-C0	1		
	+----------+							
	| 75956B | TAPE, BLACK OUT FRONT DOOR, OUTER UPPER L							
	+----------+ H							
1111 - 1507	F65#..LO		TUYAKESI BLACK DUMMY (1E7 ,1H2 ,B72 ,R56 ,S37 ,T23 ,W09)		75956-BZ040-C0	1		
1507 - 1901	F653..STD		TUYAKESI BLACK DUMMY (1E7 ,1G3 ,3Q3 ,4U3 ,8X2 ,T23 ,W09)		75956-BZ040-C0	1		
1901 -	F65#..STD		TUYAKESI BLACK DUMMY (1E7 ,1G3 ,3Q3 ,4T3 ,B79 ,W09 ,W24)		75956-BZ040-C0	1		
	+----------+							
	| 75957C | TAPE, BLACK OUT FRONT DOOR, OUTER REAR RH							
	+----------+							
1111 - 1507	F65#..LO		TUYAKESI BLACK DUMMY (1E7 ,1H2 ,B72 ,R56 ,S37 ,T23 ,W09)		75957-BZ040-C0	1		
1507 - 1901	F653..STD		TUYAKESI BLACK DUMMY (1E7 ,1G3 ,3Q3 ,4U3 ,8X2 ,T23 ,W09)		75957-BZ040-C0	1		

PROD_DATE	MODELS	SPEC CODE	DESCRIPTION	R/P	PART NUMBER	QYT	REV_REF	
							FR	TO
	+----------+ | 75957C | TAPE, BLACK OUT FRONT DOOR, OUTER REAR RH CONTINUED--+							
1901 -	F65#..STD		TUYAKESI BLACK DUMMY (1E7 ,1G3 ,3Q3 ,4T3 ,B79 ,W09 ,W24)		75957-BZ040-C0	1		
	+----------+ | 75958B | TAPE, BLACK OUT FRONT DOOR, OUTER REAR LH +----------+							
1111 - 1507	F65#..LO		TUYAKESI BLACK DUMMY (1E7 ,1H2 ,B72 ,R56 ,S37 ,T23 ,W09)		75958-BZ040-C0	1		
1507 - 1901	F653..STD		TUYAKESI BLACK DUMMY (1E7 ,1G3 ,3Q3 ,4U3 ,8X2 ,T23 ,W09)		75958-BZ040-C0	1		
1901 -	F65#..STD		TUYAKESI BLACK DUMMY (1E7 ,1G3 ,3Q3 ,4T3 ,B79 ,W09 ,W24)		75958-BZ040-C0	1		

(1111-)

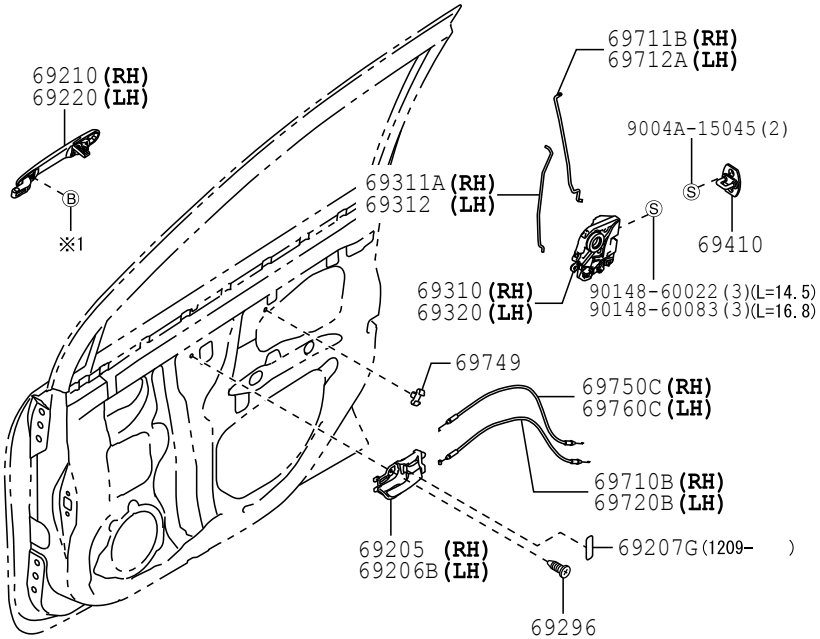

※1 91621-40610(2)(M6,L=10)(-2006)
90041-05504(2)(M6,L=8.5)(2007-)

6753 677121-H

FIG.67-53 FRONT DOOR LOCK & HANDLE

PROD_DATE	MODELS	SPEC CODE	DESCRIPTION	R/P	PART NUMBER	QYT	REV_REF FR	REV_REF TO
	+----------+							
	| 69205 | HANDLE SUB-ASSY, FRONT DOOR INSIDE, RH							
	+----------+							
1111 - 1408	F650..STD		DK.GRAY(TRIM1#)		69270-BZ090-B0	1		
1111 - 1408	F651		-(TRIM4#)		69270-BZ090-E0	1		
1111 - 1408	F650..LO		-(TRIM4#)		69270-BZ090-E0	1		
1409 - 1507	F650..STD		DK.GRAY(TRIM1#)		69270-BZ091-B0	1		
1409 - 1507	F651		BEIGE(TRIM4#)		69270-BZ091-E0	1		
1409 - 1507	F650..LO		BEIGE(TRIM4#)		69270-BZ091-E0	1		
1507 - 1607	F650..STD		DK.GRAY(TRIM1#)		69270-BZ091-B0	1		
1507 - 1806	F653		DK.GRAY(TRIM4#)		69270-BZ091-B0	1		
1507 - 1806	F650..LO		DK.GRAY(TRIM4#)		69270-BZ091-B0	1		
1806 - 1901	F653		BLACK(TRIM4#)		69270-BZ091-C0	1		
1901 -	F65#		LINEN BEIGE(TRIM4#)		69270-BZ091-E1	1		
	+----------+							
	| 69206B | HANDLE SUB-ASSY, FRONT DOOR INSIDE, LH							
	+----------+							
1111 - 1408	F650..STD		DK.GRAY(TRIM1#)		69280-BZ090-B0	1		
1111 - 1408	F651		-(TRIM4#)		69280-BZ090-E0	1		
1111 - 1408	F650..LO		-(TRIM4#)		69280-BZ090-E0	1		
1409 - 1507	F650..STD		DK.GRAY(TRIM1#)		69280-BZ091-B0	1		
1409 - 1507	F651		BEIGE(TRIM4#)		69280-BZ091-E0	1		
1409 - 1507	F650..LO		BEIGE(TRIM4#)		69280-BZ091-E0	1		
1507 - 1607	F650..STD		DK.GRAY(TRIM1#)		69280-BZ091-B0	1		
1507 - 1806	F653		DK.GRAY(TRIM4#)		69280-BZ091-B0	1		
1507 - 1806	F650..LO		DK.GRAY(TRIM4#)		69280-BZ091-B0	1		
1806 - 1901	F653		BLACK(TRIM4#)		69280-BZ091-C0	1		
1901 -	F65#		LINEN BEIGE(TRIM4#)		69280-BZ091-E1	1		
	+----------+							
	| 69207G | PLATE(FOR FRONT DOOR LOCK INSIDE HANDLE)							
	+----------+							
1209 - 1507	F65#				74531-BZ030-	2		

PROD_DATE	MODELS	SPEC CODE	DESCRIPTION	R/P	PART NUMBER	QYT	REV_REF FR	REV_REF TO
	+----------+							
	| 69207G | PLATE(FOR FRONT DOOR LOCK INSIDE HANDLE)							
	CONTINUED--+							
1507 - 1607	F65O				74531-BZ030-	2		
1507 - 1901	F653				74531-BZ030-	2		
1901 -	F65#				74531-BZ030-	2		
	+----------+							
	| 69210 | HANDLE ASSY, FRONT DOOR, OUTSIDE RH							
	+----------+							
1111 - 1507	F65#		WHITE(WO9)		69210-BZ200-A0	1		
1111 - 1507	F65#		GRAY ME.(S37)		69210-BZ200-B0	1		
1111 - 1507	F65#		SILVER M.M.(1E7)		69210-BZ200-B1	1		
1111 - 1507	F65#		DK. STEEL MC.(1H2)		69210-BZ200-B2	1		
1111 - 1507	F65#		BLACK ME.(X12)		69210-BZ200-C0	1		
1111 - 1507	F65#		MAROON MC.(R56)		69210-BZ200-D0	1		
1111 - 1507	F65#		CHAMPAGNE ME.(T23)		69210-BZ200-E0	1		
1111 - 1507	F65#		LT.BLUE ME.(B72)		69210-BZ200-J0	1		
1507 - 1901	F65#		WHITE(WO9)		69210-BZ200-A0	1		
1507 - 1901	F65#		SILVER M.M.(1E7)		69210-BZ200-B1	1		
1507 - 1901	F65#		GRAY ME.(1G3)		69210-BZ200-B3	1		
1507 - 1901	F65#		BLACK ME.(X12)		69210-BZ200-C0	1		
1507 - 1901	F65#		DK. RED M.M.(3Q3)		69210-BZ200-D1	1		
1507 - 1901	F65#		CHAMPAGNE ME.(T23)		69210-BZ200-E0	1		
1507 - 1901	F65#		DK. BROWN M.M.(4U3)		69210-BZ200-E1	1		
1507 - 1901	F65#		NEBULA BLUE ME.(8X2)		69210-BZ200-J1	1		
1901 -	F65#		WHITE(WO9)		69210-BZ200-A0	1		
1901 -	F65#		WHITE PEARL MC.CS(W24)		69210-BZ200-A1	1		
1901 -	F65#		SILVER M.M.(1E7)		69210-BZ200-B1	1		
1901 -	F65#		GRAY ME.(1G3)		69210-BZ200-B3	1		
1901 -	F65#		BLACK ME.(X12)		69210-BZ200-C0	1		

FIG.67-53 FRONT DOOR LOCK & HANDLE

PROD_DATE	MODELS	SPEC CODE	DESCRIPTION	R/P	PART NUMBER	QYT	REV_REF FR	REV_REF TO
	+----------+							
	| 69210 | HANDLE ASSY, FRONT DOOR, OUTSIDE RH							
	CONTINUED--+							
1901 -	F65#		DK. RED M.M.(3Q3)		69210-BZ200-D1	1		
1901 -	F65#		BRONZE M.M.(4T3)		69210-BZ200-E2	1		
1901 -	F65#		DARK BLUE SE.(B79)		69210-BZ200-J4	1		
	+----------+							
	| 69220 | HANDLE ASSY, FRONT DOOR OUTSIDE, LH							
	+----------+							
1111 - 1507	F65#		WHITE(WO9)		69220-BZ200-A0	1		
1111 - 1507	F65#		GRAY ME.(S37)		69220-BZ200-B0	1		
1111 - 1507	F65#		SILVER M.M.(1E7)		69220-BZ200-B1	1		
1111 - 1507	F65#		DK. STEEL MC.(1H2)		69220-BZ200-B2	1		
1111 - 1507	F65#		BLACK ME.(X12)		69220-BZ200-C0	1		
1111 - 1507	F65#		MAROON MC.(R56)		69220-BZ200-D0	1		
1111 - 1507	F65#		CHAMPAGNE ME.(T23)		69220-BZ200-E0	1		
1111 - 1507	F65#		LT.BLUE ME.(B72)		69220-BZ200-J0	1		
1507 - 1901	F65#		WHITE(WO9)		69220-BZ200-A0	1		
1507 - 1901	F65#		SILVER M.M.(1E7)		69220-BZ200-B1	1		
1507 - 1901	F65#		GRAY ME.(1G3)		69220-BZ200-B3	1		
1507 - 1901	F65#		BLACK ME.(X12)		69220-BZ200-C0	1		
1507 - 1901	F65#		DK. RED M.M.(3Q3)		69220-BZ200-D1	1		
1507 - 1901	F65#		CHAMPAGNE ME.(T23)		69220-BZ200-E0	1		
1507 - 1901	F65#		DK. BROWN M.M.(4U3)		69220-BZ200-E1	1		
1507 - 1901	F65#		NEBULA BLUE ME.(8X2)		69220-BZ200-J1	1		
1901 -	F65#		WHITE(WO9)		69220-BZ200-A0	1		
1901 -	F65#		WHITE PEARL MC.CS(W24)		69220-BZ200-A1	1		
1901 -	F65#		SILVER M.M.(1E7)		69220-BZ200-B1	1		
1901 -	F65#		GRAY ME.(1G3)		69220-BZ200-B3	1		
1901 -	F65#		BLACK ME.(X12)		69220-BZ200-C0	1		

PROD_DATE	MODELS	SPEC CODE	DESCRIPTION	R/P	PART NUMBER	QYT	REV_REF FR	REV_REF TO
	+----------+							
	| 69220 | HANDLE ASSY, FRONT DOOR OUTSIDE, LH							
	CONTINUED--+							
1901 -	F65#		DK. RED M.M.(3Q3)		69220-BZ200-D1	1		
1901 -	F65#		BRONZE M.M.(4T3)		69220-BZ200-E2	1		
1901 -	F65#		DARK BLUE SE.(B79)		69220-BZ200-J4	1		
	+----------+							
	| 69296 | SCREW, DOOR INSIDE HANDLE							
	+----------+							
1111 - 1507	F65#				90041-67041-	2		
1507 - 1710	F65#				90041-67041-	2		
1711 - 1901	F653				9004A-16093-	2		
1901 -	F65#				9004A-16093-	2		
	+----------+							
	| 69310 | LOCK ASSY, FRONT DOOR, RH							
	+----------+							
1111 - 1207	F651..STD				69310-BZ110-	1		
1111 - 1507	F650..STD				69310-BZ110-	1		
1111 - 1507	F65#..LO				69310-BZ120-	1		
1207 - 1507	F651..STD				69310-BZ120-	1		
1507 - 1607	F650..STD				69310-BZ110-	1		
1507 - 1607	F650..LO				69310-BZ130-	1		
1507 - 1610	F653				69310-BZ130-	1		
1611 - 1901	F653				69310-BZ370-	1		
1901 -	F65#				69310-BZ370-	1		
	+----------+							
	| 69311A | ROD, FRONT DOOR LOCK OPEN, RH							
	+----------+							
1111 - 1507	F65#				69311-BZ060-	1		
1507 - 1607	F650				69311-BZ060-	1		
1507 - 1901	F653				69311-BZ060-	1		
1901 -	F65#				69311-BZ060-	1		

FIG.67-53 FRONT DOOR LOCK & HANDLE

PROD_DATE	MODELS	SPEC CODE	DESCRIPTION	R/P	PART NUMBER	QYT	REV_REF FR	REV_REF TO
	+----------+							
	| 69312 | ROD, FRONT DOOR LOCK OPEN, LH							
	+----------+							
1111 - 1507	F65#				69312-BZ060-	1		
1507 - 1607	F650				69312-BZ060-	1		
1507 - 1901	F653				69312-BZ060-	1		
1901 -	F65#				69312-BZ060-	1		
	+----------+							
	| 69320 | LOCK ASSY, FRONT DOOR, LH							
	+----------+							
1111 - 1207	F651..STD				69320-BZ100-	1		
1111 - 1507	F650..STD				69320-BZ100-	1		
1111 - 1507	F65#..LO				69320-BZ110-	1		
1207 - 1507	F651..STD				69320-BZ110-	1		
1507 - 1607	F650..STD				69320-BZ100-	1		
1507 - 1607	F650..LO				69320-BZ110-	1		
1507 - 1610	F653				69320-BZ110-	1		
1611 - 1901	F653				69320-BZ330-	1		
1901 -	F65#				69320-BZ330-	1		
	+----------+							
	| 69410 | PLATE ASSY, FRONT DOOR LOCK STRIKER							
	+----------+							
1111 - 1507	F65#				69410-BZ010-	2		
1507 - 1607	F650				69410-BZ010-	2		
1507 - 1901	F653				69410-BZ010-	2		
1901 -	F65#				69410-BZ010-	2		
	+----------+							
	| 69710B | CABLE ASSY, FRONT DOOR LOCK REMOTE CONTROL, RH							
	+----------+							
1111 - 1507	F65#				69710-BZ070-	1		
1507 - 1607	F650				69710-BZ070-	1		
1507 - 1901	F653				69710-BZ070-	1		
1901 -	F65#				69710-BZ070-	1		

PROD_DATE	MODELS	SPEC CODE	DESCRIPTION	R/P	PART NUMBER	QYT	REV_REF FR	REV_REF TO
	69711B		LINK, FRONT DOOR LOCK REMOTE CONTROL, RH					
1111 - 1507	F65#				69711-BZ040-	1		
1507 - 1607	F650				69711-BZ040-	1		
1507 - 1901	F653				69711-BZ040-	1		
1901 -	F65#				69711-BZ040-	1		
	69712A		LINK, FRONT DOOR LOCK REMOTE CONTROL, LH					
1111 - 1311	F65#				69712-BZ040-	1		
1312 - 1507	F65#				69712-BZ041-	1		
1507 - 1607	F650				69712-BZ041-	1		
1507 - 1901	F653				69712-BZ041-	1		
1901 -	F65#				69712-BZ041-	1		
	69720B		CABLE ASSY, FRONT DOOR LOCK REMOTE CONTROL, LH					
1111 - 1507	F65#				69710-BZ070-	1		
1507 - 1607	F650				69710-BZ070-	1		
1507 - 1901	F653				69710-BZ070-	1		
1901 -	F65#				69710-BZ070-	1		
	69749		CLAMP, FRONT DOOR LOCK LINK					
1111 - 1507	F65#				69749-32040-	2		
1507 - 1601	F65#				69749-32040-	2		
1602 - 1607	F650				69749-BZ100- # (69749-32040-)	2 1		
1602 - 1901	F653				69749-BZ100- # (69749-32040-)	2 1		
1901 -	F65#				69749-BZ100- # (69749-32040-)	2 1		

FIG.67-53 FRONT DOOR LOCK & HANDLE

PROD_DATE	MODELS	SPEC CODE	DESCRIPTION	R/P	PART NUMBER	QYT	REV_REF FR	REV_REF TO
	69750C		CABLE ASSY, FRONT DOOR INSIDE LOCKING, RH					
1111 - 1507	F65#				69750-BZ070-	1		
1507 - 1607	F650				69750-BZ070-	1		
1507 - 1901	F653				69750-BZ070-	1		
1901 -	F65#				69750-BZ070-	1		
	69760C		CABLE ASSY, FRONT DOOR INSIDE LOCKING LH					
1111 - 1507	F65#				69760-BZ060-	1		
1507 - 1607	F650				69760-BZ060-	1		
1507 - 1901	F653				69760-BZ060-	1		
1901 -	F65#				69760-BZ060-	1		

FIG.67-54 FRONT DOOR WINDOW REGULATOR & HINGE

(1111-)

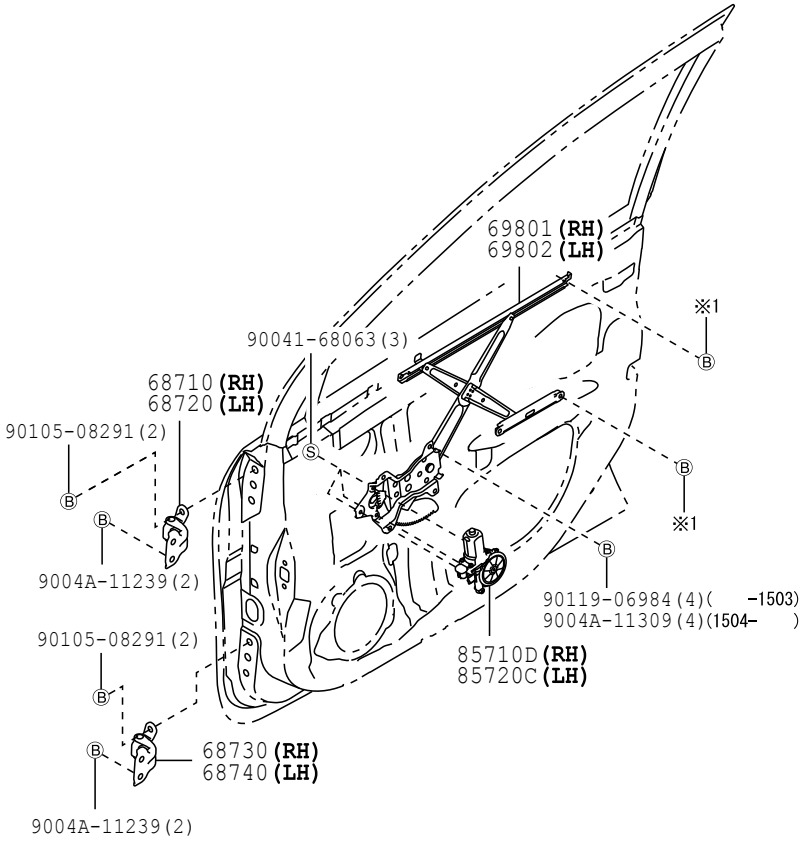

※1 90119-06984(2)(-1503)
9004A-11309(2)(1504-)

6754

677123-C

FIG.67-54 FRONT DOOR WINDOW REGULATOR & HINGE

PROD_DATE	MODELS	SPEC CODE	DESCRIPTION	R/P	PART NUMBER	QYT	REV_REF FR	REV_REF TO
	68710	HINGE ASSY, FRONT DOOR, UPPER RH						
1111 - 1507	F65#				68750-BZ010-	1		
1507 - 1607	F650				68750-BZ010-	1		
1507 - 1901	F653				68750-BZ010-	1		
1901 -	F65#				68750-BZ010-	1		
	68720	HINGE ASSY, FRONT DOOR, UPPER LH						
1111 - 1507	F65#				68760-BZ010-	1		
1507 - 1607	F650				68760-BZ010-	1		
1507 - 1901	F653				68760-BZ010-	1		
1901 -	F65#				68760-BZ010-	1		
	68730	HINGE ASSY, FRONT DOOR, LOWER RH						
1111 - 1507	F65#				68750-BZ010-	1		
1507 - 1901	F65#				68750-BZ010-	1		
1901 -	F65#				68750-BZ010-	1		
	68740	HINGE ASSY, FRONT DOOR, LOWER LH						
1111 - 1507	F65#				68760-BZ010-	1		
1507 - 1901	F65#				68760-BZ010-	1		
1901 -	F65#				68760-BZ010-	1		
	69801	REGULATOR SUB-ASSY, FRONT DOOR WINDOW, RH						
1111 - 1507	F65#				69801-BZ110-	1		
1507 - 1607	F650				69801-BZ110-	1		
1507 - 1901	F653				69801-BZ110-	1		
1901 -	F65#				69801-BZ110-	1		

FIG.67-54 FRONT DOOR WINDOW REGULATOR & HINGE

PROD_DATE	MODELS	SPEC CODE	DESCRIPTION	R/P	PART NUMBER	QYT	REV_REF FR	REV_REF TO
	+----------+							
	| 69802 | REGULATOR SUB-ASSY, FRONT DOOR WINDOW, LH							
	+----------+							
1111 - 1507	F65#				69802-BZ100-	1		
1507 - 1607	F650				69802-BZ100-	1		
1507 - 1901	F653				69802-BZ100-	1		
1901 -	F65#				69802-BZ100-	1		
	+----------+							
	| 85710D | MOTOR ASSY, POWER WINDOW REGULATOR, RH							
	+----------+							
1111 - 1205	F65#		BEARING: COPPER		85710-BZ040-	1		
				#	(85710-BZ041-)	1		
1205 - 1507	F65#		BEARING: IRON,COPPER		85710-BZ041-	1		
1507 - 1607	F650				85710-BZ170-	1		
1507 - 1901	F653				85710-BZ170-	1		
1901 -	F65#				85710-BZ170-	1		
	+----------+							
	| 85720C | MOTOR ASSY, POWER WINDOW REGULATOR, LH							
	+----------+							
1111 - 1205	F65#		BEARING: COPPER		85720-BZ040-	1		
				#	(85720-BZ041-)	1		
1205 - 1507	F65#		BEARING: IRON,COPPER		85720-BZ041-	1		
1507 - 1607	F650				85720-BZ042-	1		
1507 - 1901	F653				85720-BZ042-	1		
1901 -	F65#				85720-BZ042-	1		

(1111-)

DOOR PANEL

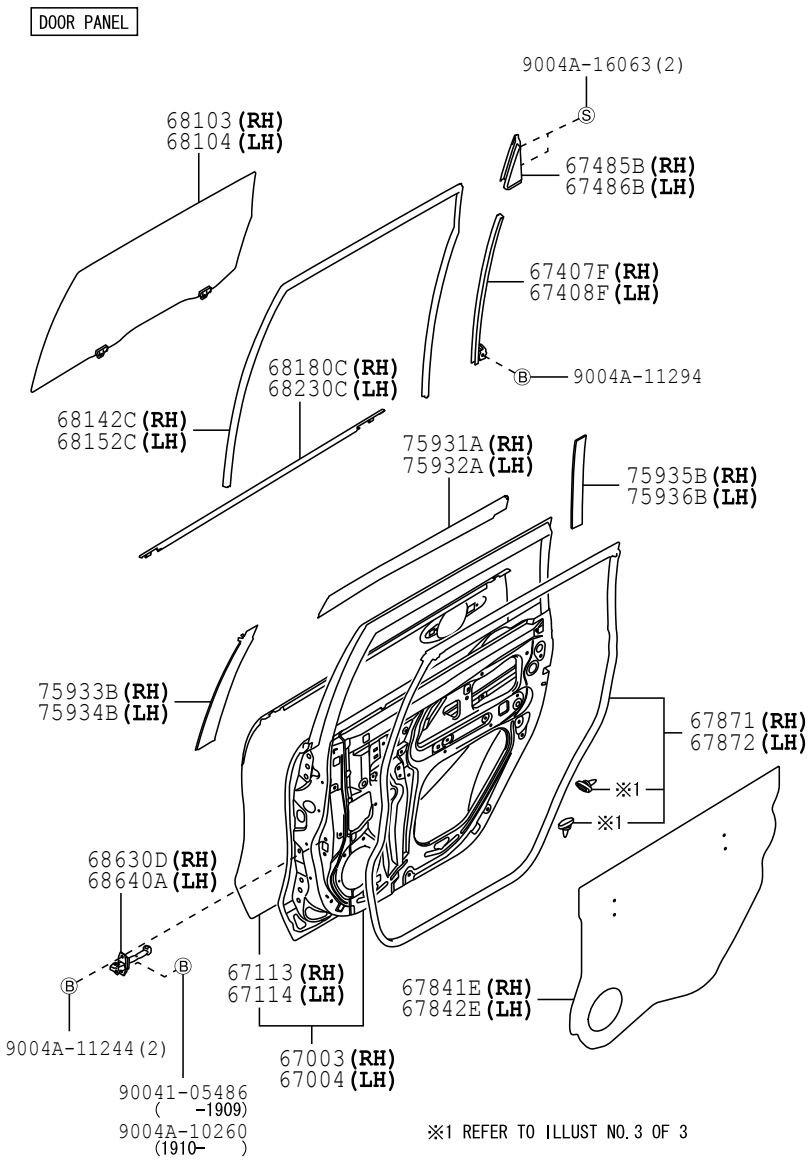

6755 677124-J

FIG. 67-55 REAR DOOR PANEL & GLASS

(1111-)

DOOR TRIM

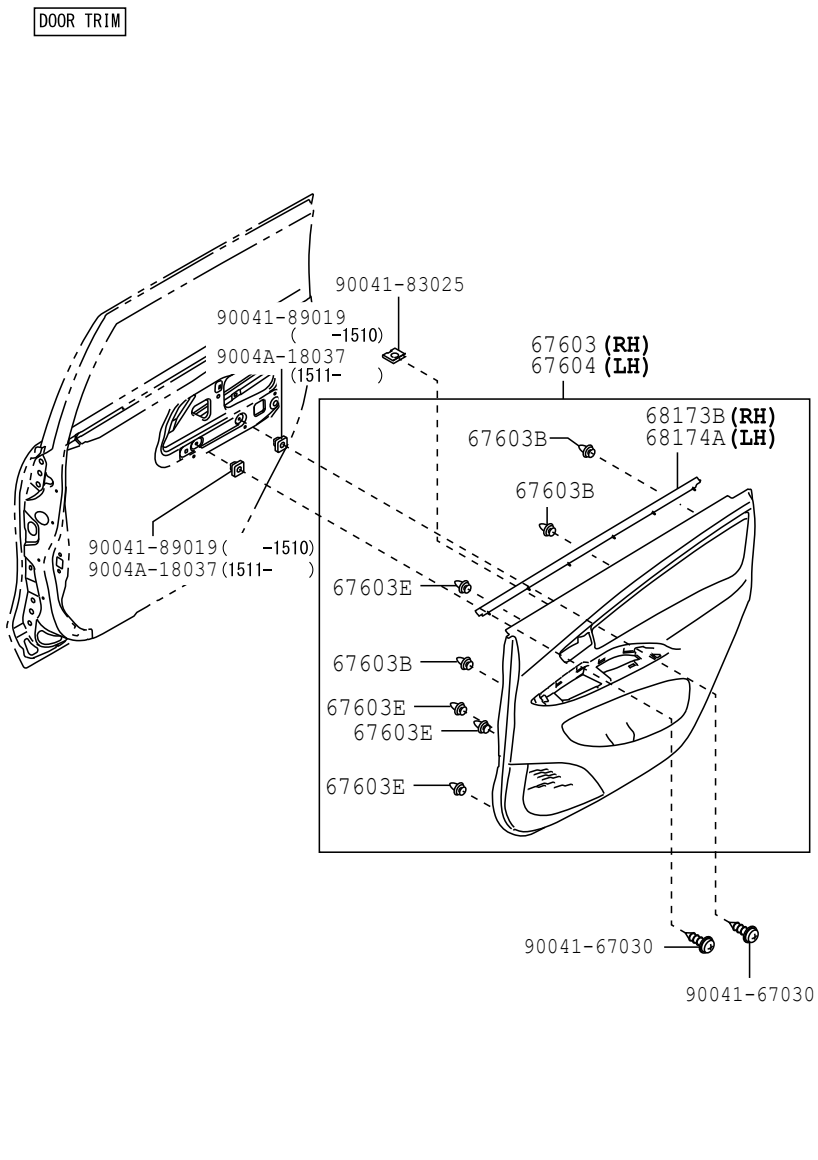

6755 677125-B

(1111-1507)

WETHERSTRIP RETAINER & CLIP

WETHERSTRIP RETAINER & CLIP

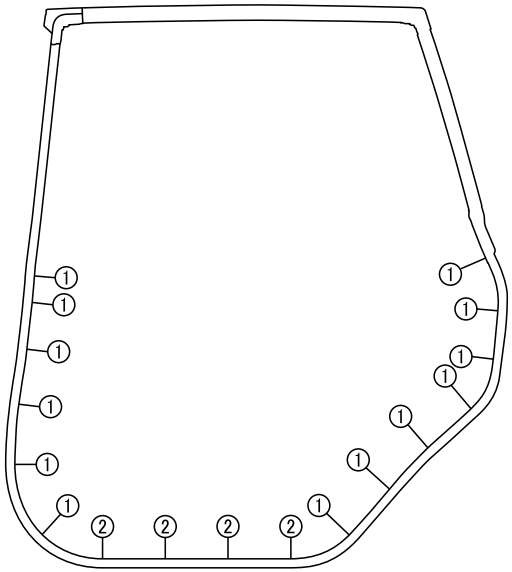

	PART NO.	SHAPE
①	67871A	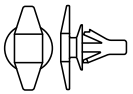
②	67867D **(RH)**	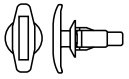
	67868D **(LH)**	

FIG.67-55 REAR DOOR PANEL & GLASS

(1507-)

WETHERSTRIP RETAINER & CLIP

WETHERSTRIP RETAINER & CLIP

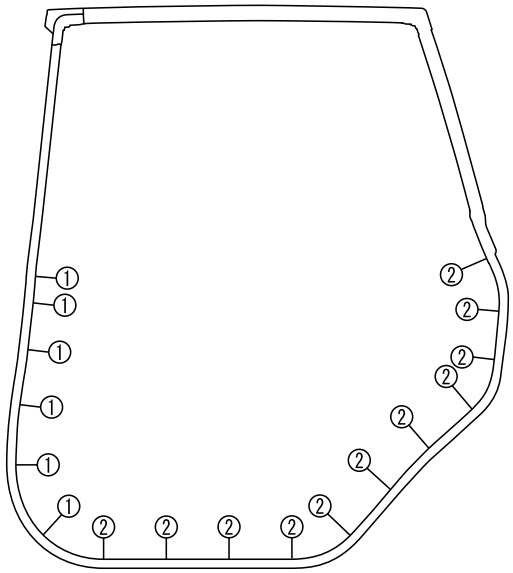

	PART NO.
①	67871A
②	67867D **(RH)** 67868D **(LH)**

PROD_DATE	MODELS	SPEC CODE	DESCRIPTION	R/P	PART NUMBER	QYT	REV_REF FR	REV_REF TO
	+----------+							
	| 67003 | PANEL SUB-ASSY, REAR DOOR, RH							
	+----------+							
1111 - 1507	F65#				67003-BZ380-	1		
1507 - 1901	F65#				67003-BZ560-	1		
1901 - 1907	F65#				67003-BZ560-	1		
1908 -	F65#				67003-BZ620-	1		
	+----------+							
	| 67004 | PANEL SUB-ASSY, REAR DOOR, LH							
	+----------+							
1111 - 1507	F65#				67004-BZ370-	1		
1507 - 1901	F65#				67004-BZ560-	1		
1901 - 1907	F65#				67004-BZ560-	1		
1908 -	F65#				67004-BZ620-	1		
	+----------+							
	| 67113 | PANEL, REAR DOOR, OUTER RH							
	+----------+							
1111 - 1507	F65#				67113-BZ240-	1		
1507 - 1901	F65#				67113-BZ240-	1		
1901 -	F65#				67113-BZ240-	1		
	+----------+							
	| 67114 | PANEL, REAR DOOR, OUTER LH							
	+----------+							
1111 - 1507	F65#				67114-BZ240-	1		
1507 - 1901	F65#				67114-BZ240-	1		
1901 -	F65#				67114-BZ240-	1		
	+----------+							
	| 67407F | FRAME SUB-ASSY, REAR DOOR WINDOW, REAR LOWER RH							
	+----------+							
1111 - 1507	F65#				67407-BZ090-	1		
1507 - 1607	F650				67407-BZ090-	1		
1507 - 1901	F653				67407-BZ090-	1		
1901 -	F65#				67407-BZ090-	1		

FIG.67-55 REAR DOOR PANEL & GLASS

PROD_DATE	MODELS	SPEC CODE	DESCRIPTION	R/P	PART NUMBER	QYT	REV_REF FR	REV_REF TO
	+----------+							
	| 67408F | FRAME SUB-ASSY, REAR DOOR WINDOW, REAR LOWER LH							
	+----------+							
1111 - 1507	F65#				67408-BZ090-	1		
1507 - 1607	F650				67408-BZ090-	1		
1507 - 1901	F653				67408-BZ090-	1		
1901 -	F65#				67408-BZ090-	1		
	+----------+							
	| 67485B | SEAL, REAR DOOR DIVISION BAR, INSIDE, RH							
	+----------+							
1111 - 1507	F65#				67485-BZ040-	1		
1507 - 1607	F650				67485-BZ040-	1		
1507 - 1901	F653				67485-BZ040-	1		
1901 -	F65#				67485-BZ040-	1		
	+----------+							
	| 67486B | SEAL, REAR DOOR DIVISION BAR, INSIDE, LH							
	+----------+							
1111 - 1507	F65#				67486-BZ040-	1		
1507 - 1607	F650				67486-BZ040-	1		
1507 - 1901	F653				67486-BZ040-	1		
1901 -	F65#				67486-BZ040-	1		
	+----------+							
	| 67603 | BOARD SUB-ASSY, REAR DOOR TRIM, RH							
	+----------+							
1111 - 1305	F651..STD		-(TRIM4#)		67607-BZ300-E0	1		
1111 - 1305	F65#..LO		-(TRIM4#)		67607-BZ310-E0	1		
1111 - 1507	F650..STD		DK.GRAY(TRIM1#)		67607-BZ300-B2	1		
1305 - 1507	F651		BEIGE(TRIM4#)		67607-BZ360-E0	1		
1305 - 1507	F650..LO		BEIGE(TRIM4#)		67607-BZ360-E0	1		
1507 - 1607	F650..STD		DK.GRAY(TRIM1#)		67607-BZ300-B2	1		
1507 - 1901	F65#..LO		DK.GRAY(TRIM4#)		67607-BZ300-B2	1		
1507 - 1901	F653..STD		BROWN(TRIM4#)		67607-BZ470-B1	1		
1901 -	F653..LO		LINEN BEIGE(TRIM4#)		67607-BZ300-E1	1		

PROD_DATE	MODELS	SPEC CODE	DESCRIPTION	R/P	PART NUMBER	QYT	REV_REF FR	REV_REF TO
	+----------+							
	| 67603 | BOARD SUB-ASSY, REAR DOOR TRIM, RH							
	CONTINUED--+							
1901 -	F65#..STD		LINEN BEIGE(TRIM4#)		67607-BZ450-E0	1		
	+----------+							
	| 67603B | CLIP(FOR REAR DOOR TRIM BOARD)							
	+----------+							
1111 - 1507	F65#				9004A-46275-	6		
1507 - 1901	F65#				9004A-46275-	6		
1901 -	F65#				9004A-46275-	6		
	+----------+							
	| 67603E | CLIP(FOR REAR DOOR TRIM BOARD)							
	+----------+							
1111 - 1507	F65#				9004A-46302-	8		
1507 - 1901	F65#				9004A-46302-	8		
1901 -	F65#				9004A-46302-	8		
	+----------+							
	| 67604 | BOARD SUB-ASSY, REAR DOOR TRIM, LH							
	+----------+							
1111 - 1305	F651..STD		-(TRIM4#)		67608-BZ300-E0	1		
1111 - 1305	F65#..LO		-(TRIM4#)		67608-BZ310-E0	1		
1111 - 1507	F650..STD		DK.GRAY(TRIM1#)		67608-BZ300-B2	1		
1305 - 1507	F651		BEIGE(TRIM4#)		67608-BZ360-E0	1		
1305 - 1507	F650..LO		BEIGE(TRIM4#)		67608-BZ360-E0	1		
1507 - 1607	F650..STD		DK.GRAY(TRIM1#)		67608-BZ300-B2	1		
1507 - 1901	F65#..LO		DK.GRAY(TRIM4#)		67608-BZ300-B2	1		
1507 - 1901	F653..STD		BROWN(TRIM4#)		67608-BZ470-B1	1		
1901 -	F653..LO		LINEN BEIGE(TRIM4#)		67608-BZ300-E1	1		
1901 -	F65#..STD		LINEN BEIGE(TRIM4#)		67608-BZ450-E0	1		
	+----------+							
	| 67841E | COVER, REAR DOOR SERVICE HOLE, RH							
	+----------+							
1111 - 1507	F65#				67841-BZ230-	1		
1507 - 1607	F650				67841-BZ230-	1		
1507 - 1901	F653				67841-BZ230-	1		

FIG.67-55 REAR DOOR PANEL & GLASS

PROD_DATE	MODELS	SPEC CODE	DESCRIPTION	R/P	PART NUMBER	QYT	REV_REF FR	REV_REF TO
	+----------+							
	| 67841E | COVER, REAR DOOR SERVICE HOLE, RH							
	CONTINUED--+							
1901 -	F65#				67841-BZ230-	1		
	+----------+							
	| 67842E | COVER, REAR DOOR SERVICE HOLE, LH							
	+----------+							
1111 - 1507	F65#				67841-BZ230-	1		
1507 - 1607	F650				67841-BZ230-	1		
1507 - 1901	F653				67841-BZ230-	1		
1901 -	F65#				67841-BZ230-	1		
	+----------+							
	| 67867D | RETAINER, REAR DOOR WEATHERSTRIP, RH							
	+----------+							
1111 - 1507	F65#				67867-97209-	4		
1507 - 1607	F650				67867-B2320-	11		
1507 - 1901	F653				67867-B2320-	11		
1901 -	F65#				67867-B2320-	11		
	+----------+							
	| 67868D | RETAINER, REAR DOOR WEATHERSTRIP, LH							
	+----------+							
1111 - 1507	F65#				67868-97207-	4		
1507 - 1607	F650				67867-B2320-	11		
1507 - 1901	F653				67867-B2320-	11		
1901 -	F65#				67867-B2320-	11		
	+----------+							
	| 67871 | WEATHERSTRIP, REAR DOOR, RH							
	+----------+							
1111 - 1507	F65#				67871-BZ140-	1		
1507 - 1607	F650				67871-BZ190-	1		
1507 - 1901	F653				67871-BZ190-	1		
1901 -	F65#				67871-BZ190-	1		
	+----------+							
	| 67871A | RETAINER(FOR REAR DOOR WEATHERSTRIP)							
	+----------+							
1111 - 1507	F65#		RH		67867-BZ010-	13		

PROD_DATE	MODELS	SPEC CODE	DESCRIPTION	R/P	PART NUMBER	QYT	REV_REF FR	REV_REF TO
	+----------+							
	| 67871A | RETAINER(FOR REAR DOOR WEATHERSTRIP)							
	CONTINUED--+							
1111 - 1507	F65#		LH		67868-BZ010-	13		
1507 - 1607	F650				67867-B2190-	12		
1507 - 1901	F653				67867-B2190-	12		
1901 -	F65#				67867-B2190-	12		
	+----------+							
	| 67872 | WEATHERSTRIP, REAR DOOR, LH							
	+----------+							
1111 - 1507	F65#				67872-BZ130-	1		
1507 - 1607	F650				67872-BZ180-	1		
1507 - 1901	F653				67872-BZ180-	1		
1901 -	F65#				67872-BZ180-	1		
	+----------+							
	| 68103 | GLASS SUB-ASSY, REAR DOOR, RH							
	+----------+							
1111 - 1202	F65#		T=3.1,GREEN		68103-BZ240-	1		
1203 - 1507	F65#		T=3.1,GREEN		68103-BZ241-	1		
1507 - 1607	F650		T=3.1,GREEN		68103-BZ241-	1		
1507 - 1901	F653		T=3.1,GREEN		68103-BZ241-	1		
1901 -	F65#		T=3.1,GREEN		68103-BZ241-	1		
	+----------+							
	| 68104 | GLASS SUB-ASSY, REAR DOOR, LH							
	+----------+							
1111 - 1202	F65#		T=3.1,GREEN		68104-BZ230-	1		
1203 - 1507	F65#		T=3.1,GREEN		68104-BZ231-	1		
1507 - 1607	F650		T=3.1,GREEN		68104-BZ231-	1		
1507 - 1901	F653		T=3.1,GREEN		68104-BZ231-	1		
1901 -	F65#		T=3.1,GREEN		68104-BZ231-	1		
	+----------+							
	| 68142C | RUN, REAR DOOR GLASS, RH							
	+----------+							
1111 - 1507	F65#				68142-BZ100-	1		
1507 - 1607	F650				68142-BZ100-	1		

FIG.67-55 REAR DOOR PANEL & GLASS

PROD_DATE	MODELS	SPEC CODE	DESCRIPTION	R/P	PART NUMBER	QYT	REV_REF FR	REV_REF TO
	+----------+							
	| 68142C | RUN, REAR DOOR GLASS, RH							
	CONTINUED--+							
1507 - 1901	F653				68142-BZ100-	1		
1901 -	F65#				68142-BZ100-	1		
	+----------+							
	| 68152C | RUN, REAR DOOR GLASS, LH							
	+----------+							
1111 - 1507	F65#				68152-BZ100-	1		
1507 - 1607	F650				68152-BZ100-	1		
1507 - 1901	F653				68152-BZ100-	1		
1901 -	F65#				68152-BZ100-	1		
	+----------+							
	| 68173B | WEATHERSTRIP, REAR DOOR GLASS, INNER RH							
	+----------+							
1111 - 1507	F65#				68173-BZ110-	1		
1507 - 1607	F650				68173-BZ110-	1		
1507 - 1901	F653				68173-BZ110-	1		
1901 -	F65#				68173-BZ110-	1		
	+----------+							
	| 68174A | WEATHERSTRIP, REAR DOOR GLASS, INNER LH							
	+----------+							
1111 - 1507	F65#				68173-BZ110-	1		
1507 - 1607	F650				68173-BZ110-	1		
1507 - 1901	F653				68173-BZ110-	1		
1901 -	F65#				68173-BZ110-	1		
	+----------+							
	| 68180C | WEATHERSTRIP ASSY, REAR DOOR GLASS, OUTER RH							
	+----------+							
1111 - 1507	F65#				68180-BZ040-	1		
1507 - 1607	F650				68180-BZ040-	1		
1507 - 1901	F653				68180-BZ040-	1		
1901 -	F65#				68180-BZ040-	1		

PROD_DATE	MODELS	SPEC CODE	DESCRIPTION	R/P	PART NUMBER	QYT	REV_REF FR	REV_REF TO
	+----------+							
	| 68230C | WEATHERSTRIP ASSY, REAR DOOR GLASS, OUTER LH							
	+----------+							
1111 - 1507	F65#				68230-BZ030-	1		
1507 - 1607	F650				68230-BZ030-	1		
1507 - 1901	F653				68230-BZ030-	1		
1901 -	F65#				68230-BZ030-	1		
	+----------+							
	| 68630D | CHECK ASSY, REAR DOOR, RH							
	+----------+							
1111 - 1507	F65#				68630-BZ120-	1		
1507 - 1607	F650				68630-BZ120-	1		
1507 - 1901	F653				68630-BZ120-	1		
1901 -	F65#				68630-BZ120-	1		
	+----------+							
	| 68640A | CHECK ASSY, REAR DOOR, LH							
	+----------+							
1111 - 1507	F65#				68630-BZ120-	1		
1507 - 1607	F650				68630-BZ120-	1		
1507 - 1901	F653				68630-BZ120-	1		
1901 -	F65#				68630-BZ120-	1		
	+----------+							
	| 75931A | TAPE, BLACK OUT, OUTER UPPER RH							
	+----------+							
1111 - 1507	F65#..LO		TUYAKESI BLACK DUMMY (1E7 ,1H2 ,B72 ,R56 ,S37 ,T23 ,W09)		75931-BZ050-C0	1		
1507 - 1901	F653..STD		TUYAKESI BLACK DUMMY (1E7 ,1G3 ,3Q3 ,4U3 ,8X2 ,T23 ,W09)		75931-BZ050-C0	1		
1901 -	F65#..STD		TUYAKESI BLACK DUMMY (1E7 ,1G3 ,3Q3 ,4T3 ,B79 ,W09 ,W24)		75931-BZ050-C0	1		
	+----------+							
	| 75932A | TAPE, BLACK OUT, OUTER UPPER LH							
	+----------+							
1111 - 1507	F65#..LO		TUYAKESI BLACK DUMMY (1E7 ,1H2 ,B72 ,R56 ,S37 ,T23 ,W09)		75932-BZ050-C0	1		

FIG.67-55 REAR DOOR PANEL & GLASS

PROD_DATE	MODELS	SPEC CODE	DESCRIPTION	R/P	PART NUMBER	QYT	REV_REF FR	REV_REF TO
	+----------+							
	| 75932A | TAPE, BLACK OUT, OUTER UPPER LH							
	CONTINUED--+							
1507 - 1901	F653..STD		TUYAKESI BLACK DUMMY (1E7 ,1G3 ,3Q3 ,4U3 ,8X2 ,T23 ,W09)		75932-BZ050-C0	1		
1901 -	F65#..STD		TUYAKESI BLACK DUMMY (1E7 ,1G3 ,3Q3 ,4T3 ,B79 ,W09 ,W24)		75932-BZ050-C0	1		
	+----------+							
	| 75933B | TAPE, BLACK OUT, OUTER FRONT RH							
	+----------+							
1111 - 1507	F65#..LO		TUYAKESI BLACK DUMMY (1E7 ,1H2 ,B72 ,R56 ,S37 ,T23 ,W09)		75933-BZ050-C0	1		
1507 - 1901	F653..STD		TUYAKESI BLACK DUMMY (1E7 ,1G3 ,3Q3 ,4U3 ,8X2 ,T23 ,W09)		75933-BZ050-C0	1		
1901 -	F65#..STD		TUYAKESI BLACK DUMMY (1E7 ,1G3 ,3Q3 ,4T3 ,B79 ,W09 ,W24)		75933-BZ050-C0	1		
	+----------+							
	| 75934B | TAPE, BLACK OUT, OUTER FRONT LH							
	+----------+							
1111 - 1507	F65#..LO		TUYAKESI BLACK DUMMY (1E7 ,1H2 ,B72 ,R56 ,S37 ,T23 ,W09)		75934-BZ050-C0	1		
1507 - 1901	F653..STD		TUYAKESI BLACK DUMMY (1E7 ,1G3 ,3Q3 ,4U3 ,8X2 ,T23 ,W09)		75934-BZ050-C0	1		
1901 -	F65#..STD		TUYAKESI BLACK DUMMY (1E7 ,1G3 ,3Q3 ,4T3 ,B79 ,W09 ,W24)		75934-BZ050-C0	1		
	+----------+							
	| 75935B | TAPE, BLACK OUT, OUTER REAR RH							
	+----------+							
1111 - 1507	F65#..LO		TUYAKESI BLACK DUMMY (1E7 ,1H2 ,B72 ,R56 ,S37 ,T23 ,W09)		75935-BZ060-C0	1		
1507 - 1901	F653..STD		TUYAKESI BLACK DUMMY (1E7 ,1G3 ,3Q3 ,4U3 ,8X2 ,T23 ,W09)		75935-BZ060-C0	1		

PROD_DATE	MODELS	SPEC CODE	DESCRIPTION	R/P	PART NUMBER	QYT	REV_REF FR	REV_REF TO
	+----------+							
	| 75935B | TAPE, BLACK OUT, OUTER REAR RH							
	CONTINUED--+							
1901 -	F65#..STD		TUYAKESI BLACK DUMMY (1E7 ,1G3 ,3Q3 ,4T3 ,B79 ,W09 ,W24)		75935-BZ060-C0	1		
	+----------+							
	| 75936B | TAPE, BLACK OUT, OUTER REAR LH							
	+----------+							
1111 - 1507	F65#..LO		TUYAKESI BLACK DUMMY (1E7 ,1H2 ,B72 ,R56 ,S37 ,T23 ,W09)		75936-BZ060-C0	1		
1507 - 1901	F653..STD		TUYAKESI BLACK DUMMY (1E7 ,1G3 ,3Q3 ,4U3 ,8X2 ,T23 ,W09)		75936-BZ060-C0	1		
1901 -	F65#..STD		TUYAKESI BLACK DUMMY (1E7 ,1G3 ,3Q3 ,4T3 ,B79 ,W09 ,W24)		75936-BZ060-C0	1		

FIG. 67-56 REAR DOOR LOCK & HANDLE

(1111-)

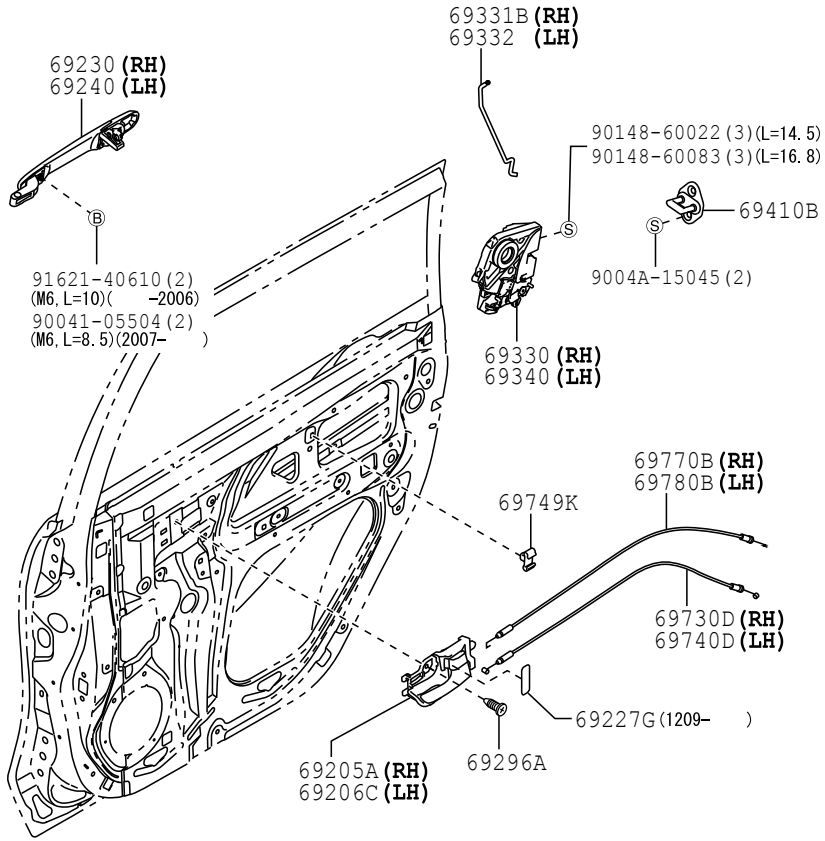

6756 677130-J

FIG. 67-56 REAR DOOR LOCK & HANDLE

PROD_DATE	MODELS	SPEC CODE	DESCRIPTION	R/P	PART NUMBER	QYT	REV_REF FR	REV_REF TO
	69205A HANDLE SUB-ASSY, REAR DOOR INSIDE, RH							
1111 - 1408	F650..STD		DK.GRAY(TRIM1#)		69270-BZ090-B0	1		
1111 - 1408	F651		-(TRIM4#)		69270-BZ090-E0	1		
1111 - 1408	F650..LO		-(TRIM4#)		69270-BZ090-E0	1		
1409 - 1507	F650..STD		DK.GRAY(TRIM1#)		69270-BZ091-B0	1		
1409 - 1507	F651		BEIGE(TRIM4#)		69270-BZ091-E0	1		
1409 - 1507	F650..LO		BEIGE(TRIM4#)		69270-BZ091-E0	1		
1507 - 1607	F650..STD		DK.GRAY(TRIM1#)		69270-BZ091-B0	1		
1507 - 1806	F653		DK.GRAY(TRIM4#)		69270-BZ091-B0	1		
1507 - 1806	F650..LO		DK.GRAY(TRIM4#)		69270-BZ091-B0	1		
1806 - 1901	F653		BLACK(TRIM4#)		69270-BZ091-C0	1		
1901 -	F65#		LINEN BEIGE(TRIM4#)		69270-BZ091-E1	1		
	69206C HANDLE SUB-ASSY, REAR DOOR INSIDE, LH							
1111 - 1408	F650..STD		DK.GRAY(TRIM1#)		69280-BZ090-B0	1		
1111 - 1408	F651		-(TRIM4#)		69280-BZ090-E0	1		
1111 - 1408	F650..LO		-(TRIM4#)		69280-BZ090-E0	1		
1409 - 1507	F650..STD		DK.GRAY(TRIM1#)		69280-BZ091-B0	1		
1409 - 1507	F651		BEIGE(TRIM4#)		69280-BZ091-E0	1		
1409 - 1507	F650..LO		BEIGE(TRIM4#)		69280-BZ091-E0	1		
1507 - 1607	F650..STD		DK.GRAY(TRIM1#)		69280-BZ091-B0	1		
1507 - 1806	F653		DK.GRAY(TRIM4#)		69280-BZ091-B0	1		
1507 - 1806	F650..LO		DK.GRAY(TRIM4#)		69280-BZ091-B0	1		
1806 - 1901	F653		BLACK(TRIM4#)		69280-BZ091-C0	1		
1901 -	F65#		LINEN BEIGE(TRIM4#)		69280-BZ091-E1	1		
	69227G PLATE(FOR REAR DOOR LOCK INSIDE HANDLE)							
1209 - 1507	F65#				74531-BZ030-	2		

PROD_DATE	MODELS	SPEC CODE	DESCRIPTION	R/P	PART NUMBER	QYT	REV_REF FR	REV_REF TO
	+----------+							
	| 69227G | PLATE(FOR REAR DOOR LOCK INSIDE HANDLE)							
	CONTINUED--+							
1507 - 1607	F65O				74531-BZ030-	2		
1507 - 1901	F653				74531-BZ030-	2		
1901 -	F65#				74531-BZ030-	2		
	+----------+							
	| 69230 | HANDLE ASSY, REAR DOOR OUTSIDE, RH							
	+----------+							
1111 - 1507	F65#		WHITE(WO9)		69210-BZ200-A0	1		
1111 - 1507	F65#		GRAY ME.(S37)		69210-BZ200-B0	1		
1111 - 1507	F65#		SILVER M.M.(1E7)		69210-BZ200-B1	1		
1111 - 1507	F65#		DK. STEEL MC.(1H2)		69210-BZ200-B2	1		
1111 - 1507	F65#		BLACK ME.(X12)		69210-BZ200-C0	1		
1111 - 1507	F65#		MAROON MC.(R56)		69210-BZ200-D0	1		
1111 - 1507	F65#		CHAMPAGNE ME.(T23)		69210-BZ200-E0	1		
1111 - 1507	F65#		LT.BLUE ME.(B72)		69210-BZ200-J0	1		
1507 - 1901	F65#		WHITE(WO9)		69210-BZ200-A0	1		
1507 - 1901	F65#		SILVER M.M.(1E7)		69210-BZ200-B1	1		
1507 - 1901	F65#		GRAY ME.(1G3)		69210-BZ200-B3	1		
1507 - 1901	F65#		BLACK ME.(X12)		69210-BZ200-C0	1		
1507 - 1901	F65#		DK. RED M.M.(3Q3)		69210-BZ200-D1	1		
1507 - 1901	F65#		CHAMPAGNE ME.(T23)		69210-BZ200-E0	1		
1507 - 1901	F65#		DK. BROWN M.M.(4U3)		69210-BZ200-E1	1		
1507 - 1901	F65#		NEBULA BLUE ME.(8X2)		69210-BZ200-J1	1		
1901 -	F65#		WHITE(WO9)		69210-BZ200-A0	1		
1901 -	F65#		WHITE PEARL MC.CS(W24)		69210-BZ200-A1	1		
1901 -	F65#		SILVER M.M.(1E7)		69210-BZ200-B1	1		
1901 -	F65#		GRAY ME.(1G3)		69210-BZ200-B3	1		
1901 -	F65#		BLACK ME.(X12)		69210-BZ200-C0	1		

FIG.67-56 REAR DOOR LOCK & HANDLE

PROD_DATE	MODELS	SPEC CODE	DESCRIPTION	R/P	PART NUMBER	QYT	REV_REF FR	REV_REF TO
	+----------+							
	| 69230 | HANDLE ASSY, REAR DOOR OUTSIDE, RH							
	CONTINUED--+							
1901 -	F65#		DK. RED M.M.(3Q3)		69210-BZ200-D1	1		
1901 -	F65#		BRONZE M.M.(4T3)		69210-BZ200-E2	1		
1901 -	F65#		DARK BLUE SE.(B79)		69210-BZ200-J4	1		
	+----------+							
	| 69240 | HANDLE ASSY, REAR DOOR OUTSIDE, LH							
	+----------+							
1111 - 1507	F65#		WHITE(WO9)		69220-BZ200-A0	1		
1111 - 1507	F65#		GRAY ME.(S37)		69220-BZ200-B0	1		
1111 - 1507	F65#		SILVER M.M.(1E7)		69220-BZ200-B1	1		
1111 - 1507	F65#		DK. STEEL MC.(1H2)		69220-BZ200-B2	1		
1111 - 1507	F65#		BLACK ME.(X12)		69220-BZ200-C0	1		
1111 - 1507	F65#		MAROON MC.(R56)		69220-BZ200-D0	1		
1111 - 1507	F65#		CHAMPAGNE ME.(T23)		69220-BZ200-E0	1		
1111 - 1507	F65#		LT.BLUE ME.(B72)		69220-BZ200-J0	1		
1507 - 1901	F65#		WHITE(WO9)		69220-BZ200-A0	1		
1507 - 1901	F65#		SILVER M.M.(1E7)		69220-BZ200-B1	1		
1507 - 1901	F65#		GRAY ME.(1G3)		69220-BZ200-B3	1		
1507 - 1901	F65#		BLACK ME.(X12)		69220-BZ200-C0	1		
1507 - 1901	F65#		DK. RED M.M.(3Q3)		69220-BZ200-D1	1		
1507 - 1901	F65#		CHAMPAGNE ME.(T23)		69220-BZ200-E0	1		
1507 - 1901	F65#		DK. BROWN M.M.(4U3)		69220-BZ200-E1	1		
1507 - 1901	F65#		NEBULA BLUE ME.(8X2)		69220-BZ200-J1	1		
1901 -	F65#		WHITE(WO9)		69220-BZ200-A0	1		
1901 -	F65#		WHITE PEARL MC.CS(W24)		69220-BZ200-A1	1		
1901 -	F65#		SILVER M.M.(1E7)		69220-BZ200-B1	1		
1901 -	F65#		GRAY ME.(1G3)		69220-BZ200-B3	1		
1901 -	F65#		BLACK ME.(X12)		69220-BZ200-C0	1		

PROD_DATE	MODELS	SPEC CODE	DESCRIPTION	R/P	PART NUMBER	QYT	REV_REF FR	REV_REF TO
	+----------+							
	| 69240 | HANDLE ASSY, REAR DOOR OUTSIDE, LH							
	CONTINUED--+							
1901 -	F65#		DK. RED M.M.(3Q3)		69220-BZ200-D1	1		
1901 -	F65#		BRONZE M.M.(4T3)		69220-BZ200-E2	1		
1901 -	F65#		DARK BLUE SE.(B79)		69220-BZ200-J4	1		
	+----------+							
	| 69296A | SCREW, DOOR INSIDE HANDLE							
	+----------+							
1111 - 1507	F65#				90041-67041-	2		
1507 - 1710	F65#				90041-67041-	2		
1711 - 1901	F653				9004A-16093-	2		
1901 -	F65#				9004A-16093-	2		
	+----------+							
	| 69330 | LOCK ASSY, REAR DOOR, RH							
	+----------+							
1111 - 1207	F651..STD				69330-BZ090-	1		
1111 - 1507	F650..STD				69330-BZ090-	1		
1111 - 1507	F65#..LO				69330-BZ100-	1		
1207 - 1507	F651..STD				69330-BZ100-	1		
1507 - 1607	F650..STD				69330-BZ090-	1		
1507 - 1607	F650..LO				69330-BZ100-	1		
1507 - 1610	F653				69330-BZ100-	1		
1611 - 1901	F653				69330-BZ260-	1		
1901 -	F65#				69330-BZ260-	1		
	+----------+							
	| 69331B | ROD, REAR DOOR LOCK OPEN, RH							
	+----------+							
1111 - 1507	F65#				69331-BZ010-	1		
1507 - 1607	F650				69331-BZ010-	1		
1507 - 1901	F653				69331-BZ010-	1		
1901 -	F65#				69331-BZ010-	1		

FIG.67-56 REAR DOOR LOCK & HANDLE

PROD_DATE	MODELS	SPEC CODE	DESCRIPTION	R/P	PART NUMBER	QYT	REV_REF FR	REV_REF TO
	+----------+							
	| 69332 | ROD, REAR DOOR LOCK OPEN, LH							
	+----------+							
1111 - 1507	F65#				69332-BZ010-	1		
1507 - 1607	F650				69332-BZ010-	1		
1507 - 1901	F653				69332-BZ010-	1		
1901 -	F65#				69332-BZ010-	1		
	+----------+							
	| 69340 | LOCK ASSY, REAR DOOR, LH							
	+----------+							
1111 - 1207	F651..STD				69340-BZ090-	1		
1111 - 1507	F650..STD				69340-BZ090-	1		
1111 - 1507	F65#..LO				69340-BZ100-	1		
1207 - 1507	F651..STD				69340-BZ100-	1		
1507 - 1607	F650..STD				69340-BZ090-	1		
1507 - 1607	F650..LO				69340-BZ100-	1		
1507 - 1610	F653				69340-BZ100-	1		
1611 - 1901	F653				69340-BZ260-	1		
1901 -	F65#				69340-BZ260-	1		
	+----------+							
	| 69410B | PLATE ASSY, REAR DOOR LOCK STRIKER							
	+----------+							
1111 - 1507	F65#				69410-BZ010-	2		
1507 - 1607	F650				69410-BZ010-	2		
1507 - 1901	F653				69410-BZ010-	2		
1901 -	F65#				69410-BZ010-	2		
	+----------+							
	| 69730D | CABLE ASSY, REAR DOOR LOCK REMOTE CONTROL, RH							
	+----------+							
1111 - 1507	F65#				69730-BZ130-	1		
1507 - 1607	F650				69730-BZ130-	1		
1507 - 1901	F653				69730-BZ130-	1		
1901 -	F65#				69730-BZ130-	1		

FIG.67-56 REAR DOOR LOCK & HANDLE

PROD_DATE	MODELS	SPEC CODE	DESCRIPTION	R/P	PART NUMBER	QYT	REV_REF FR	REV_REF TO
	+----------+							
	| 69740D | CABLE ASSY, REAR DOOR LOCK REMOTE CONTROL LH							
	+----------+							
1111 - 1507	F65#				69730-BZ130-	1		
1507 - 1607	F650				69730-BZ130-	1		
1507 - 1901	F653				69730-BZ130-	1		
1901 -	F65#				69730-BZ130-	1		
	+----------+							
	| 69749K | CLAMP, REAR DOOR LOCK							
	+----------+							
1111 - 1507	F65#				69749-32040-	2		
1507 - 1601	F65#				69749-32040-	2		
1602 - 1607	F650				69749-BZ100-	2		
				#	(69749-32040-)	1		
1602 - 1901	F653				69749-BZ100-	2		
				#	(69749-32040-)	1		
1901 -	F65#				69749-BZ100-	2		
				#	(69749-32040-)	1		
	+----------+							
	| 69770B | CABLE ASSY, REAR DOOR INSIDE LOCKING, RH							
	+----------+							
1111 - 1507	F65#				69770-BZ080-	1		
1507 - 1607	F650				69770-BZ080-	1		
1507 - 1901	F653				69770-BZ080-	1		
1901 -	F65#				69770-BZ080-	1		
	+----------+							
	| 69780B | CABLE ASSY, REAR DOOR INSIDE LOCKING, LH							
	+----------+							
1111 - 1507	F65#				69780-BZ070-	1		
1507 - 1607	F650				69780-BZ070-	1		
1507 - 1901	F653				69780-BZ070-	1		
1901 -	F65#				69780-BZ070-	1		

FIG.67-57 REAR DOOR WINDOW REGULATOR & HINGE

(1111-)

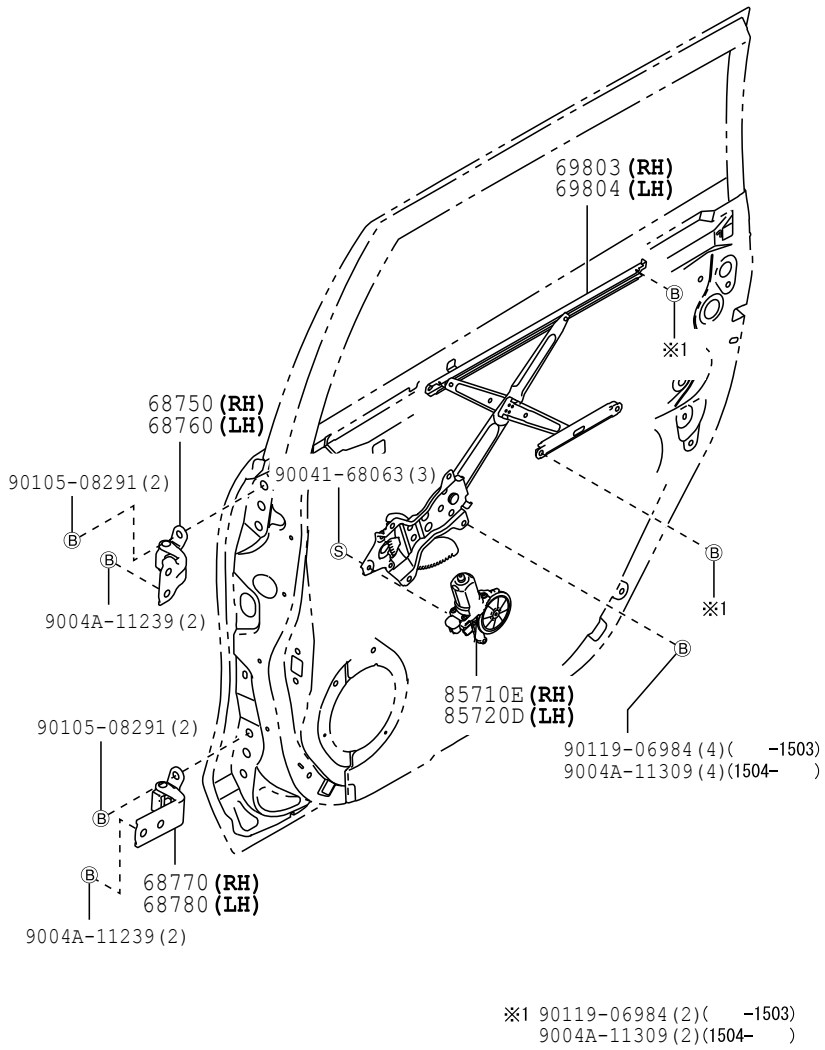

FIG.67-57 REAR DOOR WINDOW REGULATOR & HINGE

PROD_DATE	MODELS	SPEC CODE	DESCRIPTION	R/P	PART NUMBER	QYT	REV_REF FR	REV_REF TO
	68750	HINGE ASSY, REAR DOOR, UPPER RH						
1111 - 1507	F65#				68750-BZ010-	1		
1507 - 1607	F650				68750-BZ010-	1		
1507 - 1901	F653				68750-BZ010-	1		
1901 -	F65#				68750-BZ010-	1		
	68760	HINGE ASSY, REAR DOOR, UPPER LH						
1111 - 1507	F65#				68760-BZ010-	1		
1507 - 1607	F650				68760-BZ010-	1		
1507 - 1901	F653				68760-BZ010-	1		
1901 -	F65#				68760-BZ010-	1		
	68770	HINGE ASSY, REAR DOOR, LOWER RH						
1111 - 1507	F65#				68770-BZ010-	1		
1507 - 1607	F650				68770-BZ010-	1		
1507 - 1901	F653				68770-BZ010-	1		
1901 -	F65#				68770-BZ010-	1		
	68780	HINGE ASSY, REAR DOOR, LOWER LH						
1111 - 1507	F65#				68780-BZ010-	1		
1507 - 1607	F650				68780-BZ010-	1		
1507 - 1901	F653				68780-BZ010-	1		
1901 -	F65#				68780-BZ010-	1		
	69803	REGULATOR SUB-ASSY, REAR DOOR WINDOW, RH						
1111 - 1507	F65#				69801-BZ110-	1		
1507 - 1607	F650				69801-BZ110-	1		
1507 - 1901	F653				69801-BZ110-	1		
1901 -	F65#				69801-BZ110-	1		

FIG.67-57 REAR DOOR WINDOW REGULATOR & HINGE

PROD_DATE	MODELS	SPEC CODE	DESCRIPTION	R/P	PART NUMBER	QYT	REV_REF FR	REV_REF TO
	+----------+							
	| 69804 | REGULATOR SUB-ASSY, REAR DOOR WINDOW, LH							
	+----------+							
1111 - 1507	F65#				69802-BZ100-	1		
1507 - 1607	F650				69802-BZ100-	1		
1507 - 1901	F653				69802-BZ100-	1		
1901 -	F65#				69802-BZ100-	1		
	+----------+							
	| 85710E | MOTOR ASSY, POWER WINDOW REGULATOR, RH							
	+----------+							
1111 - 1205	F65#		BEARING: COPPER		85710-BZ040-	1		
				#	(85710-BZ041-)	1		
1205 - 1507	F65#		BEARING: IRON,COPPER		85710-BZ041-	1		
1507 - 1607	F650				85710-BZ042-	1		
1507 - 1901	F653				85710-BZ042-	1		
1901 -	F65#				85710-BZ042-	1		
	+----------+							
	| 85720D | MOTOR ASSY, POWER WINDOW REGULATOR, LH							
	+----------+							
1111 - 1205	F65#		BEARING: COPPER		85720-BZ040-	1		
				#	(85720-BZ041-)	1		
1205 - 1507	F65#		BEARING: IRON,COPPER		85720-BZ041-	1		
1507 - 1607	F650				85720-BZ042-	1		
1507 - 1901	F653				85720-BZ042-	1		
1901 -	F65#				85720-BZ042-	1		

FIG.67-61 BACK DOOR PANEL & GLASS

(1111-1207)

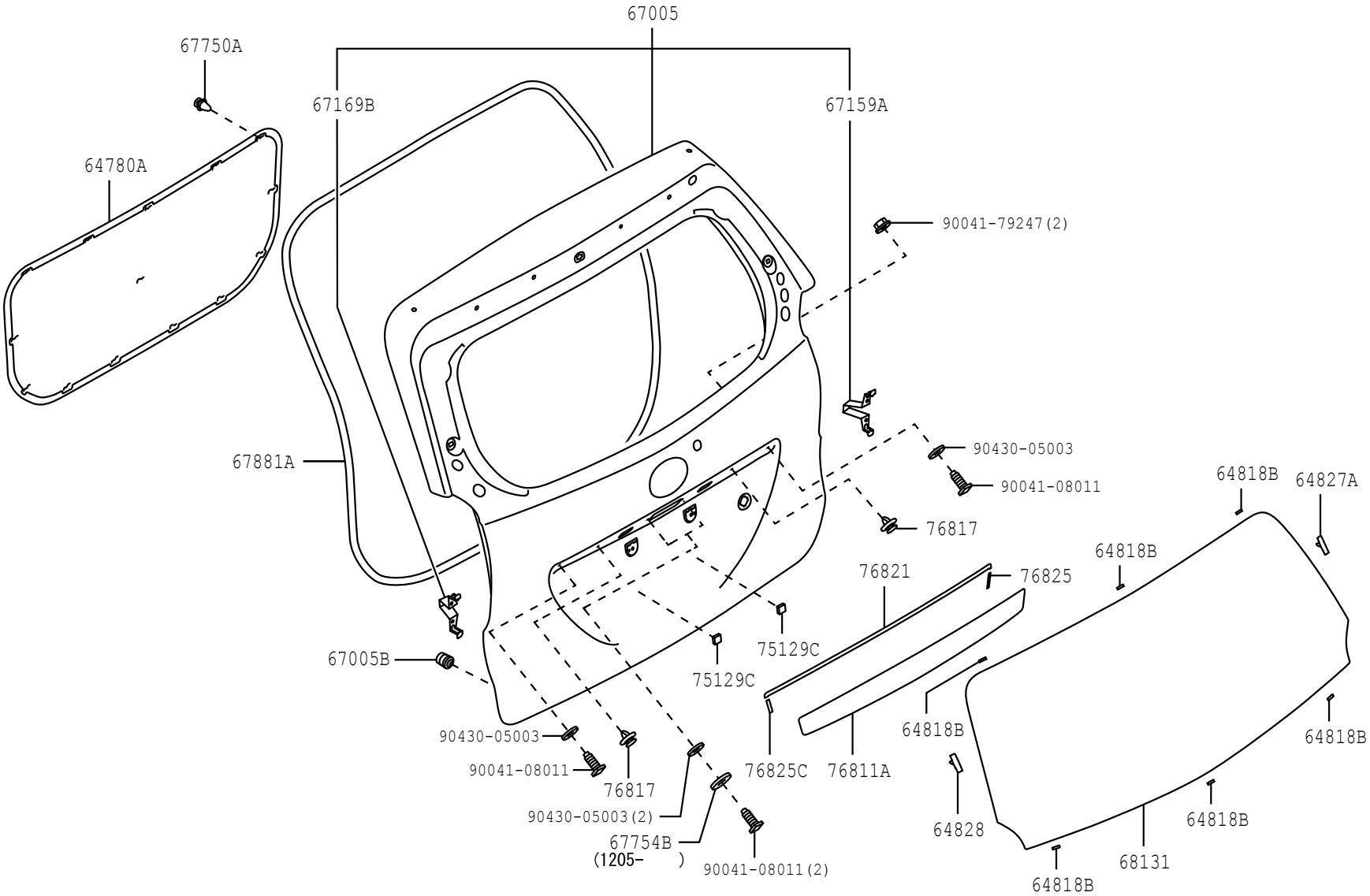

6761

677133-B

FIG.67-61 BACK DOOR PANEL & GLASS

(1207-1507)

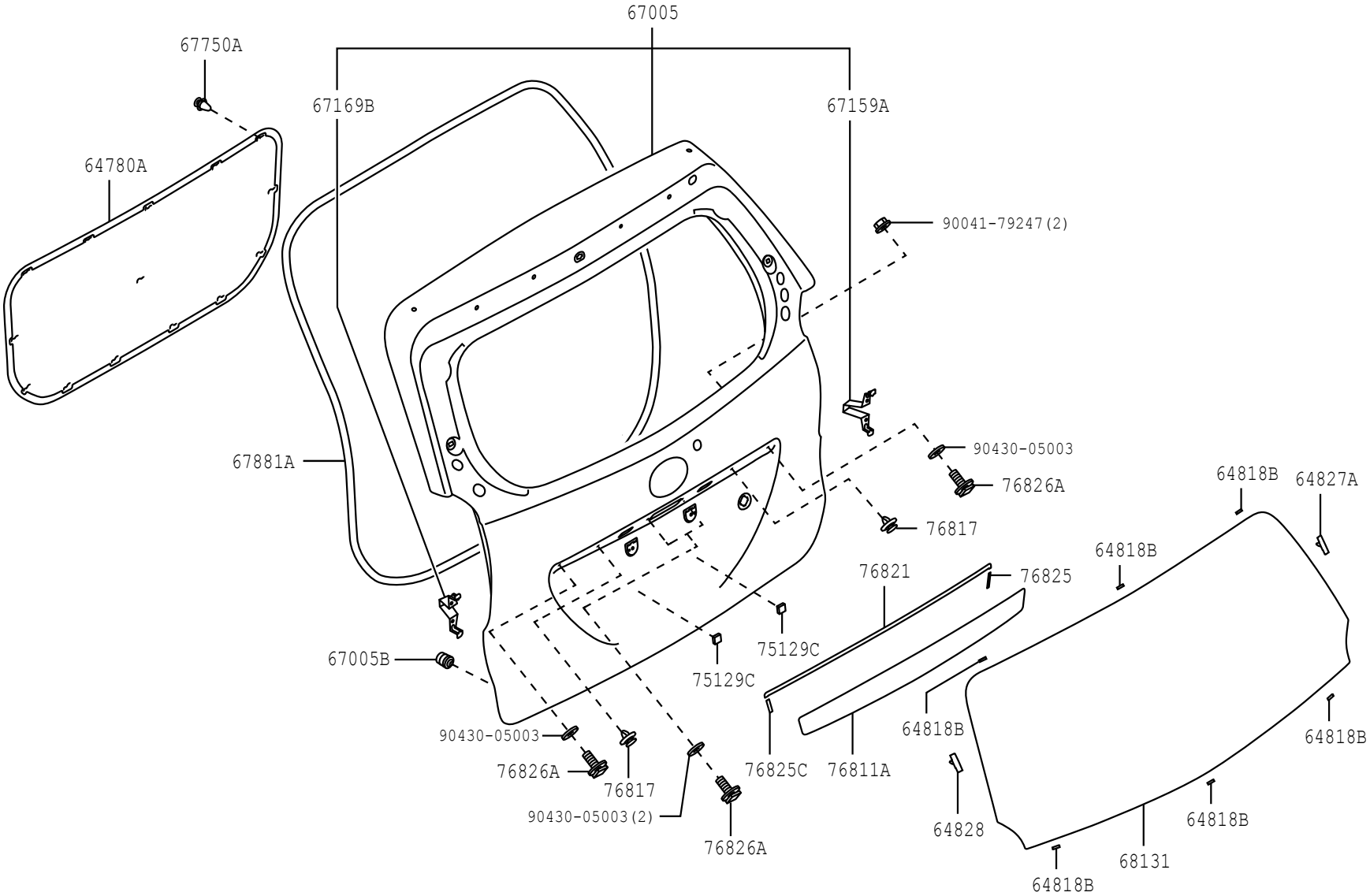

6761

677459-A

FIG.67-61 BACK DOOR PANEL & GLASS

(1507-1901)

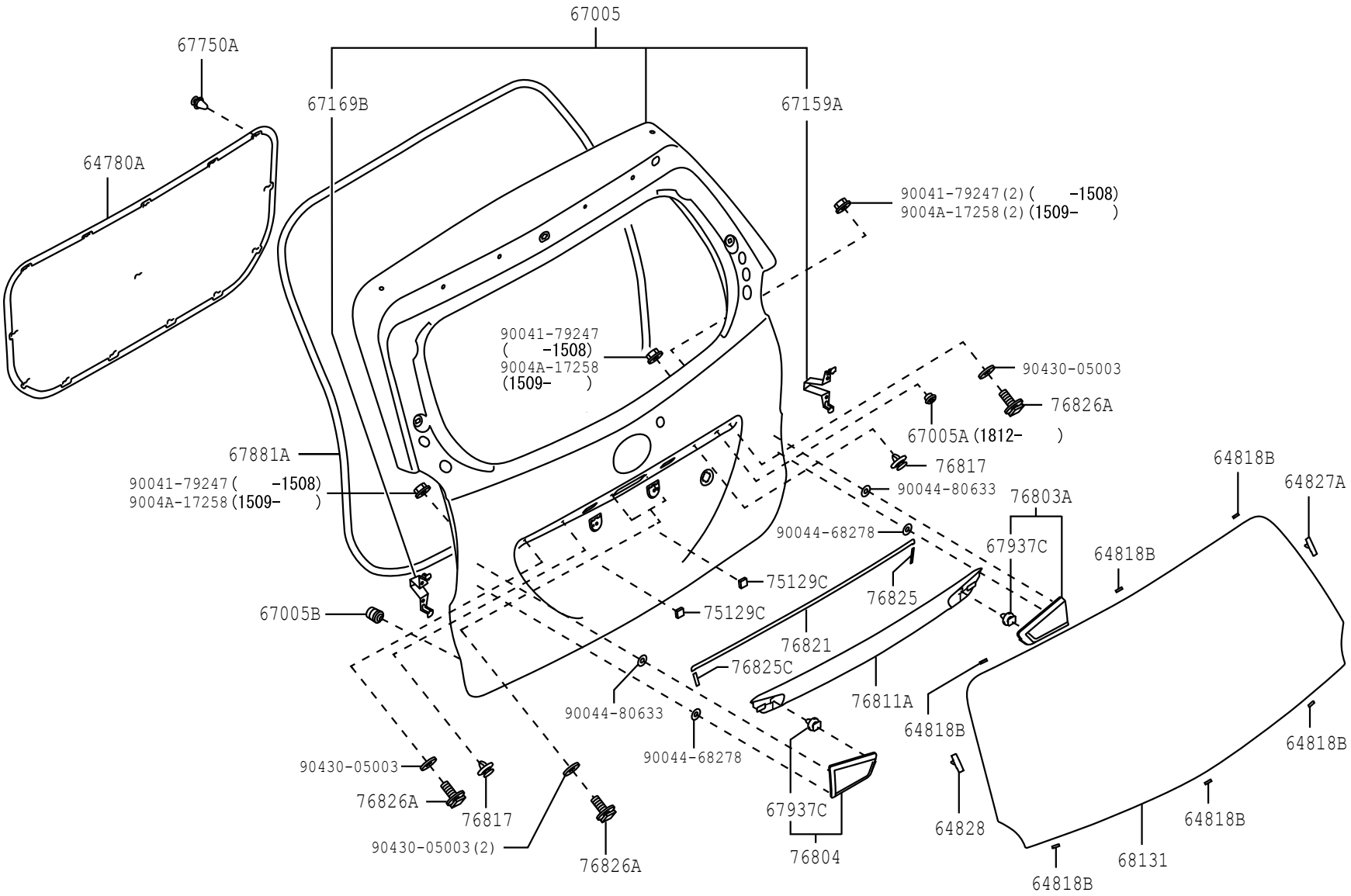

FIG.67-61 BACK DOOR PANEL & GLASS

(1901-)

BACK DOOR

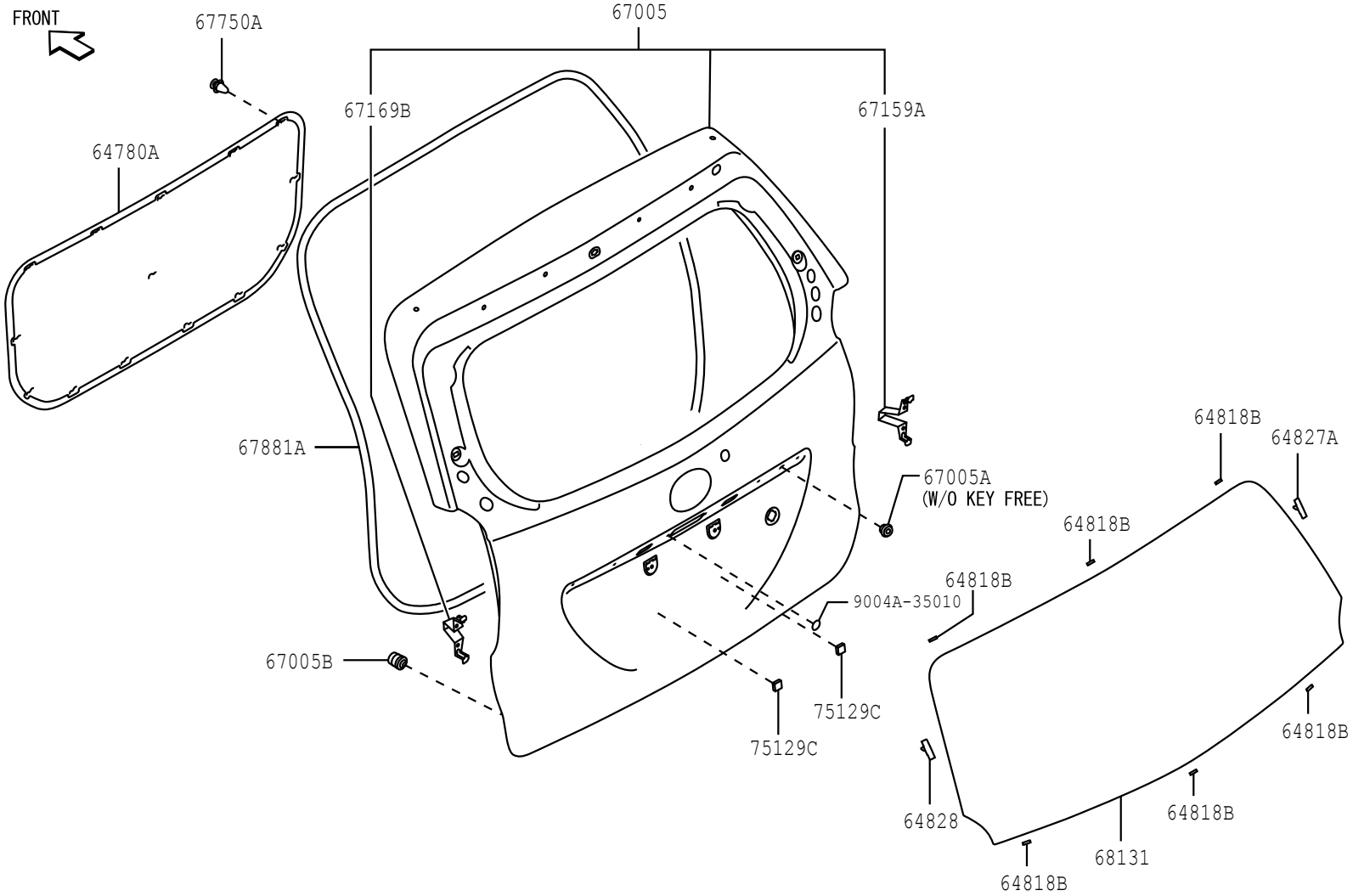

6761

67A116-B

FIG.67-61 BACK DOOR PANEL & GLASS

(1901-)F653..STD..E4AT ; (1901-)LO..5F

BACK DOOR GARNISH(ONE-PIECE)

ONE-PIECE TYPE

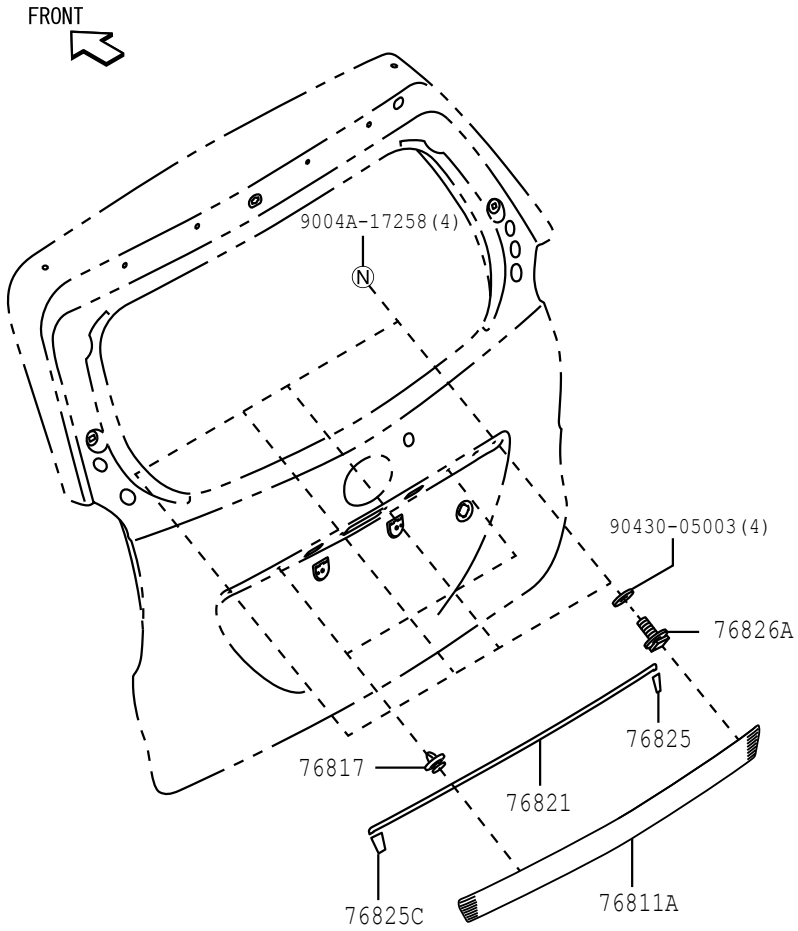

6761

67A141-A

FIG.67-61 BACK DOOR PANEL & GLASS

(1901-)

BACK DOOR GARNISH(SEPARATE)

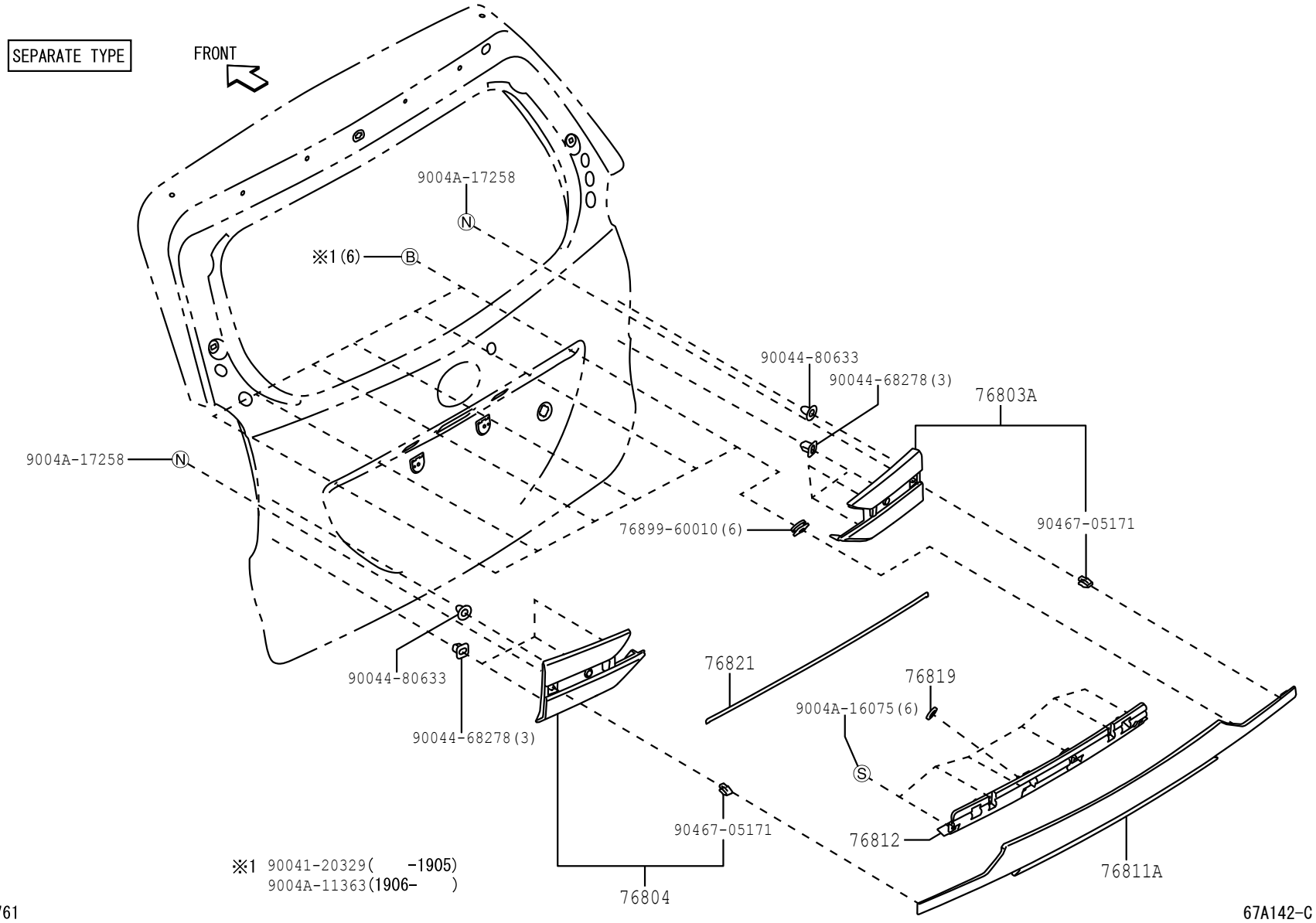

PROD_DATE	MODELS	SPEC CODE	DESCRIPTION	R/P	PART NUMBER	QYT	REV_REF FR	REV_REF TO
	+----------+							
	| 64780A | PANEL ASSY, BACK DOOR TRIM							
	+----------+							
1111 - 1507	F650..STD		DK.GRAY(TRIM1#)		64780-BZ140-B0	1		
1111 - 1507	F651		-(TRIM4#)		64780-BZ140-E0	1		
1111 - 1507	F650..LO		-(TRIM4#)		64780-BZ140-E0	1		
1507 - 1607	F650..STD		DK.GRAY(TRIM1#)		64780-BZ140-B0	1		
1507 - 1901	F653		DK.GRAY(TRIM4#)		64780-BZ140-B0	1		
1507 - 1901	F650..LO		DK.GRAY(TRIM4#)		64780-BZ140-B0	1		
1901 -	F65#		LINEN BEIGE(TRIM4#)		64780-BZ140-E1	1		
	+----------+							
	| 64818B | SPACER, BACK DOOR GLASS, NO.1							
	+----------+							
1111 - 1507	F65#				64818-BZ050-	6		
1507 - 1607	F650				64818-BZ050-	6		
1507 - 1901	F653				64818-BZ050-	6		
1901 -	F65#				64818-BZ050-	6		
	+----------+							
	| 64827A | CLIP, BACK WINDOW GLASS, RH							
	+----------+							
1111 - 1507	F65#				64827-BZ050-	1		
1507 - 1607	F650				64827-BZ050-	1		
1507 - 1901	F653				64827-BZ050-	1		
1901 -	F65#				64827-BZ050-	1		
	+----------+							
	| 64828 | CLIP, BACK WINDOW GLASS, LH							
	+----------+							
1111 - 1507	F65#				64828-BZ020-	1		
1507 - 1607	F650				64828-BZ020-	1		
1507 - 1901	F653				64828-BZ020-	1		
1901 -	F65#				64828-BZ020-	1		
	+----------+							
	| 67005 | PANEL SUB-ASSY, BACK DOOR							
	+----------+							
1111 - 1305	F65#..STD		W/O RR WIPER		67005-BZ500-	1		

FIG.67-61 BACK DOOR PANEL & GLASS

PROD_DATE	MODELS	SPEC CODE	DESCRIPTION	R/P	PART NUMBER	QYT	REV_REF FR	REV_REF TO
	+----------+							
	| 67005 | PANEL SUB-ASSY, BACK DOOR							
	CONTINUED--+							
1111 - 1507	F65#..LO		W/RR WIPER		67005-BZ510-	1		
1305 - 1507	F65#..STD		W/RR WIPER		67005-BZ510-	1		
1507 - 1607	F650..LO				67005-BZA20-	1		
1507 - 1607	F650..STD				67005-BZB00-	1		
1610 - 1811	F653..LO..5F	B2AE	INDONESIA TAXI		67005-BZ510-	1		
1507 - 1901	F653				67005-BZA20-	1		
1812 - 1901	F653..LO..5F	B2AE	INDONESIA TAXI		67005-BZD50-	1		
1901 -	F65#				67005-BZC10-	1		
1901 -	F653..LO..5F	B2AE	INDONESIA TAXI		67005-BZD50-	1		
	+----------+							
	| 67005A | PLUG, HOLE(FOR BACK DOOR PANEL)							
	+----------+							
1812 - 1901	F653				90048-71238-	1		
1901 -	F65#				90048-71238-	1		
	+----------+							
	| 67005B | CUSHION(FOR BACK DOOR PANEL)							
	+----------+							
1111 - 1507	F65#				9004A-54016-	4		
1507 - 1607	F650				9004A-54016-	4		
1507 - 1901	F653				9004A-54016-	4		
1901 -	F65#				9004A-54016-	4		
	+----------+							
	| 67159A | EXTENSION, BACK DOOR, INNER RH							
	+----------+							
1111 - 1507	F65#				67159-BZ030-	1		
1507 - 1607	F650				67159-BZ030-	1		
1507 - 1901	F653				67159-BZ030-	1		
1901 -	F65#				67159-BZ030-	1		
	+----------+							
	| 67169B | EXTENSION, BACK DOOR, INNER LH							
	+----------+							
1111 - 1507	F65#				67159-BZ030-	1		

PROD_DATE	MODELS	SPEC CODE	DESCRIPTION	R/P	PART NUMBER	QYT	REV_REF FR	REV_REF TO
	+----------+							
	| 67169B | EXTENSION, BACK DOOR, INNER LH							
	CONTINUED--+							
1507 - 1607	F650				67159-BZ030-	1		
1507 - 1901	F653				67159-BZ030-	1		
1901 -	F65#				67159-BZ030-	1		
	+----------+							
	| 67750A | CLIP(FOR BACK DOOR TRIM)							
	+----------+							
1111 - 1507	F65#				67771-BZ060-	14		
1507 - 1901	F65#				67771-BZ060-	14		
1901 -	F65#				67771-BZ060-	14		
	+----------+							
	| 67754B | SPACER, BACK DOOR TRIM							
	+----------+							
1205 - 1207	F65#				67754-BZ040-	2		
	+----------+							
	| 67881A | WEATHERSTRIP, BACK DOOR							
	+----------+							
1111 - 1507	F65#				67881-BZ140-	1		
1507 - 1607	F650				67881-BZ140-	1		
1507 - 1901	F653				67881-BZ140-	1		
1901 -	F65#				67881-BZ140-	1		
	+----------+							
	| 67937C | CLIP(FOR BACK DOOR SIDE GARNISH)							
	+----------+							
1507 - 1607	F650				53145-B2030-	2		
1507 - 1901	F653				53145-B2030-	2		
	+----------+							
	| 68131 | GLASS, BACK DOOR							
	+----------+							
1111 - 1202	F65#		T=3.1,GREEN,W/O DEFOGGER		68131-BZ420-	1		
1203 - 1507	F65#		T=3.1,GREEN,W/O DEFOGGER		68131-BZ421-	1		
1507 - 1607	F650		T=3.1,GREEN,W/O DEFOGGER		68131-BZ421-	1		

FIG.67-61 BACK DOOR PANEL & GLASS

PROD_DATE	MODELS	SPEC CODE	DESCRIPTION	R/P	PART NUMBER	QYT	REV_REF FR	REV_REF TO
	+----------+							
	| 68131 | GLASS, BACK DOOR							
	CONTINUED--+							
1507 - 1901	F653		T=3.1,GREEN,W/O DEFOGGER		68131-BZ421-	1		
1901 -	F65#		T=3.1,GREEN,W/O DEFOGGER		68131-BZ421-	1		
	+----------+							
	| 75129C | CUSHION, REAR LICENCE PLATE							
	+----------+							
1111 - 1507	F65#				75129-BZ010-	2		
				#	(75129-87502-)	1		
1507 - 1607	F650				75129-BZ010-	2		
				#	(75129-87502-)	1		
1507 - 1901	F653				75129-BZ010-	2		
				#	(75129-87502-)	1		
1901 -	F65#				75129-BZ010-	2		
				#	(75129-87502-)	1		
	+----------+							
	| 76803A | GARNISH SUB-ASSY, BACK DOOR, OUTSIDE UPPER RH							
	+----------+							
1507 - 1607	F650				76803-BZ030-	1		
1507 - 1901	F653				76803-BZ030-	1		
1901 -	F65#				76803-BZ070-	1		
	+----------+							
	| 76804 | GARNISH SUB-ASSY, BACK DOOR, OUTSIDE UPPER LH							
	+----------+							
1507 - 1607	F650				76804-BZ010-	1		
1507 - 1901	F653				76804-BZ010-	1		
1901 -	F65#				76804-BZ050-	1		
	+----------+							
	| 76811A | GARNISH, BACK DOOR, OUTSIDE							
	+----------+							
1111 - 1207	F65#				76811-BZ230-	1		
1207 - 1507	F65#				76811-BZ231-	1		
1507 - 1607	F650				76811-BZ380-	1		
1507 - 1901	F653..STD				76811-BZ340-	1		
1507 - 1901	F653..LO				76811-BZ380-	1		

PROD_DATE	MODELS	SPEC CODE	DESCRIPTION	R/P	PART NUMBER	QYT	REV_REF FR	REV_REF TO
	+----------+							
	| 76811A | GARNISH, BACK DOOR, OUTSIDE							
	CONTINUED--+							
1610 - 1901	F653..LO..5F	B2AE	INDONESIA TAXI		76811-BZ250-	1		
1901 -	F653..LO..5F	B2AE	INDONESIA TAXI		76811-BZ250-	1		
1901 -	F65#				76811-BZ540-	1		
	+----------+							
	| 76812 | GARNISH, BACK DOOR, OUTSIDE LOWER							
	+----------+							
1901 -	F65#				76812-BZ160-	1		
	+----------+							
	| 76817 | CLIP, BACK DOOR OUTSIDE GARNISH							
	+----------+							
1111 - 1507	F65#				90044-67474-	2		
1610 - 1901	F653..LO..5F	B2AE	INDONESIA TAXI		90044-67474-	2		
1901 -	F653..LO..5F	B2AE	INDONESIA TAXI		90044-67474-	2		
	+----------+							
	| 76819 | SEAL, BACK DOOR OUTSIDE GARNISH							
	+----------+							
1901 -	F65#				76819-BZ140-	1		
	+----------+							
	| 76821 | PROTECTOR, BACK DOOR GARNISH MOULDING, UPPER							
	+----------+							
1111 - 1507	F65#				76821-BZ070-	1		
1610 - 1901	F653..LO..5F	B2AE	INDONESIA TAXI		76821-BZ030-	1		
1901 -	F653..LO..5F	B2AE	INDONESIA TAXI		76821-BZ030-	1		
1901 -	F65#				76821-BZ200-	1		
	+----------+							
	| 76825 | PROTECTOR, BACK DOOR OUTSIDE GARNISH							
	+----------+							
1111 - 1507	F65#				76825-BZ020-	1		
1610 - 1901	F653..LO..5F	B2AE	INDONESIA TAXI		76825-BZ050-	1		
1901 -	F653..LO..5F	B2AE	INDONESIA TAXI		76825-BZ050-	1		
	+----------+							
	| 76825C | PROTECTOR, BACK DOOR OUTSIDE GARNISH							
	+----------+							
1111 - 1507	F65#				76825-BZ020-	1		
1610 - 1901	F653..LO..5F	B2AE	INDONESIA TAXI		76835-BZ030-	1		

FIG.67-61 BACK DOOR PANEL & GLASS

PROD_DATE	MODELS	SPEC CODE	DESCRIPTION	R/P	PART NUMBER	QYT	REV_REF FR	REV_REF TO
	+----------+							
	| 76825C | PROTECTOR, BACK DOOR OUTSIDE GARNISH							
	CONTINUED--+							
1901 -	F653..LO..5F	B2AE	INDONESIA TAXI		76835-BZ030-	1		
	+----------+							
	| 76826A | RETAINER, BACK DOOR GARNISH, NO.1							
	+----------+							
1207 - 1507	F65#				76826-BZ030-	4		
1507 - 1607	F650				76826-BZ030-	2		
1507 - 1901	F653				76826-BZ030-	2		
1610 - 1901	F653..LO..5F	B2AE	INDONESIA TAXI		76826-BZ030-	4		
1901 -	F653..LO..5F	B2AE	INDONESIA TAXI		76826-BZ030-	4		

(1111-)

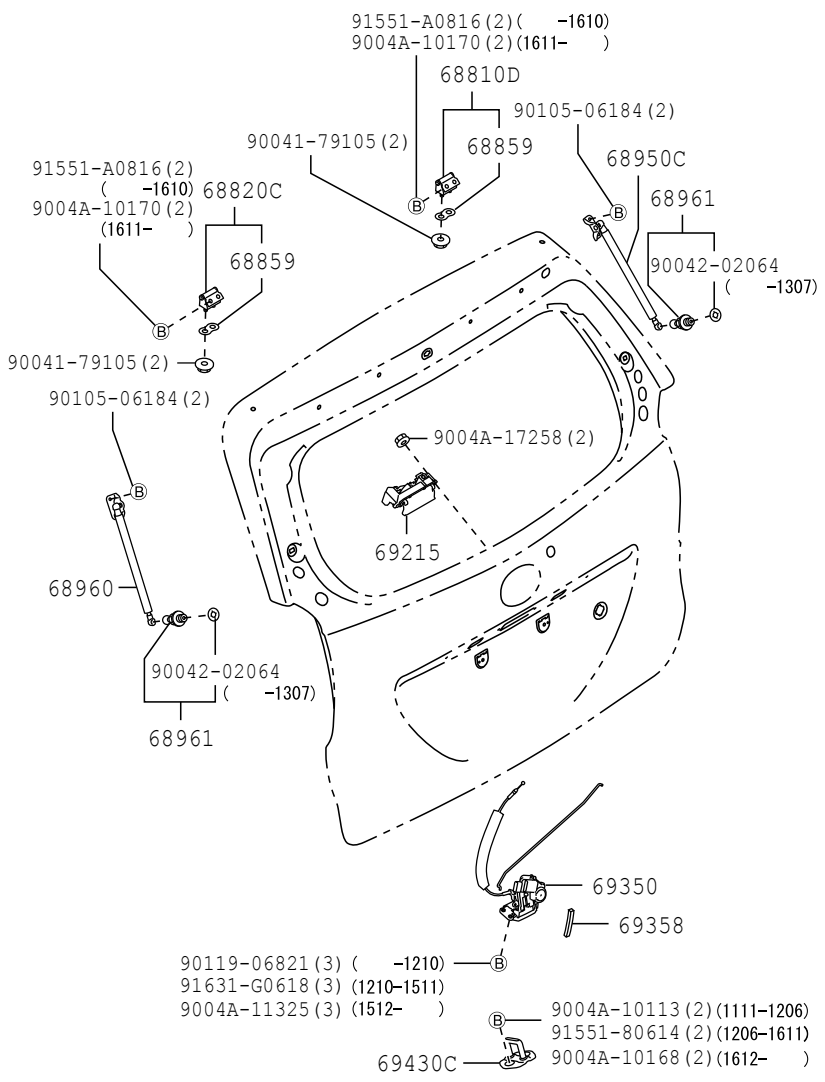

6762

677134-K

FIG.67-62 BACK DOOR LOCK & HINGE

PROD_DATE	MODELS	SPEC CODE	DESCRIPTION	R/P	PART NUMBER	QYT	REV_REF FR	REV_REF TO
	68810D HINGE ASSY, BACK DOOR, RH							
1111 - 1507	F65#				68801-BZ140-	1		
1507 - 1607	F650				68801-BZ140-	1		
1507 - 1901	F653				68801-BZ140-	1		
1901 -	F65#				68801-BZ140-	1		
	68820C HINGE ASSY, BACK DOOR, LH							
1111 - 1507	F65#				68801-BZ140-	1		
1507 - 1607	F650				68801-BZ140-	1		
1507 - 1901	F653				68801-BZ140-	1		
1901 -	F65#				68801-BZ140-	1		
	68859 PACKING, BACK DOOR HINGE							
1111 - 1507	F65#				68859-87101-	2		
1507 - 1607	F650				68859-87101-	2		
1507 - 1901	F653				68859-87101-	2		
1901 -	F65#				68859-87101-	2		
	68950C STAY ASSY, BACK DOOR, RH							
1111 - 1305	F65#..STD		W/O RR WIPER		68950-B0010-	1		
1111 - 1507	F65#..LO		W/RR WIPER		68950-B0020-	1		
1305 - 1507	F65#..STD		W/RR WIPER		68950-B0020-	1		
1507 - 1607	F650..STD				68950-B0010-	1		
1507 - 1607	F650..LO				68950-B0020-	1		
1507 - 1901	F653				68950-B0020-	1		
1901 -	F65#				68950-B0020-	1		
	68960 STAY ASSY, BACK DOOR, LH							
1111 - 1305	F65#..STD		W/O RR WIPER		68960-B0010-	1		

PROD_DATE	MODELS	SPEC CODE	DESCRIPTION	R/P	PART NUMBER	QYT	REV_REF FR	REV_REF TO
	+----------+							
	| 68960 | STAY ASSY, BACK DOOR, LH							
	CONTINUED--+							
1111 - 1507	F65#..LO		W/RR WIPER		68960-B0020-	1		
1305 - 1507	F65#..STD		W/RR WIPER		68960-B0020-	1		
1507 - 1607	F650..STD				68960-B0010-	1		
1507 - 1607	F650..LO				68960-B0020-	1		
1507 - 1901	F653				68960-B0020-	1		
1901 -	F65#				68960-B0020-	1		
	+----------+							
	| 68961 | BOLT, BACK DOOR STAY							
	+----------+							
1111 - 1306	F65#				68459-87502-	2		
				#	(68459-87202-)	1		
1307 - 1507	F65#				68459-87202-	2		
1507 - 1607	F650				68459-87202-	2		
1507 - 1901	F653				68459-87202-	2		
1901 -	F65#				68459-87202-	2		
	+----------+							
	| 69215 | HANDLE, BACK DOOR OUTSIDE							
	+----------+							
1111 - 1507	F65#				69023-0K030-	1		
1507 - 1810	F65#				69023-0K030-	1		
1811 - 1901	F653				69023-BZ070-	1		
1901 -	F65#				69023-BZ070-	1		
	+----------+							
	| 69350 | LOCK ASSY, BACK DOOR							
	+----------+							
1111 - 1204	F65#..LO				69350-BZ120-	1		
1111 - 1204	F65#..STD				69350-BZ130-	1		
1205 - 1207	F651..STD				69350-BZ131-	1		
1205 - 1507	F65#..LO		W/KEYLESS		69350-BZ121-	1		
1205 - 1507	F650..STD				69350-BZ131-	1		
1207 - 1507	F651..STD		W/KEYLESS		69350-BZ121-	1		

FIG.67-62 BACK DOOR LOCK & HINGE

PROD_DATE	MODELS	SPEC CODE	DESCRIPTION	R/P	PART NUMBER	QYT	REV_REF FR	REV_REF TO
	+----------+							
	| 69350 | LOCK ASSY, BACK DOOR							
	CONTINUED--+							
1507 - 1607	F650..LO				69350-BZ121-	1		
1507 - 1607	F650..STD				69350-BZ131-	1		
1507 - 1901	F653				69350-BZ121-	1		
1901 -	F65#				69350-BZ121-	1		
	+----------+							
	| 69358 | PROTECTOR, BACK DOOR LOCK							
	+----------+							
1111 - 1507	F65#				69358-BZ010-	1		
1507 - 1607	F650				69358-BZ010-	1		
1507 - 1901	F653				69358-BZ010-	1		
1901 -	F65#				69358-BZ010-	1		
	+----------+							
	| 69430C | STRIKER ASSY, BACK DOOR LOCK							
	+----------+							
1111 - 1507	F65#				69430-B0020-	1		
1507 - 1607	F650				69430-B0020-	1		
1507 - 1901	F653				69430-B0020-	1		
1901 -	F65#				69430-B0020-	1		

FIG.67-65 LOCK CYLINDER SET

(1111-1507)

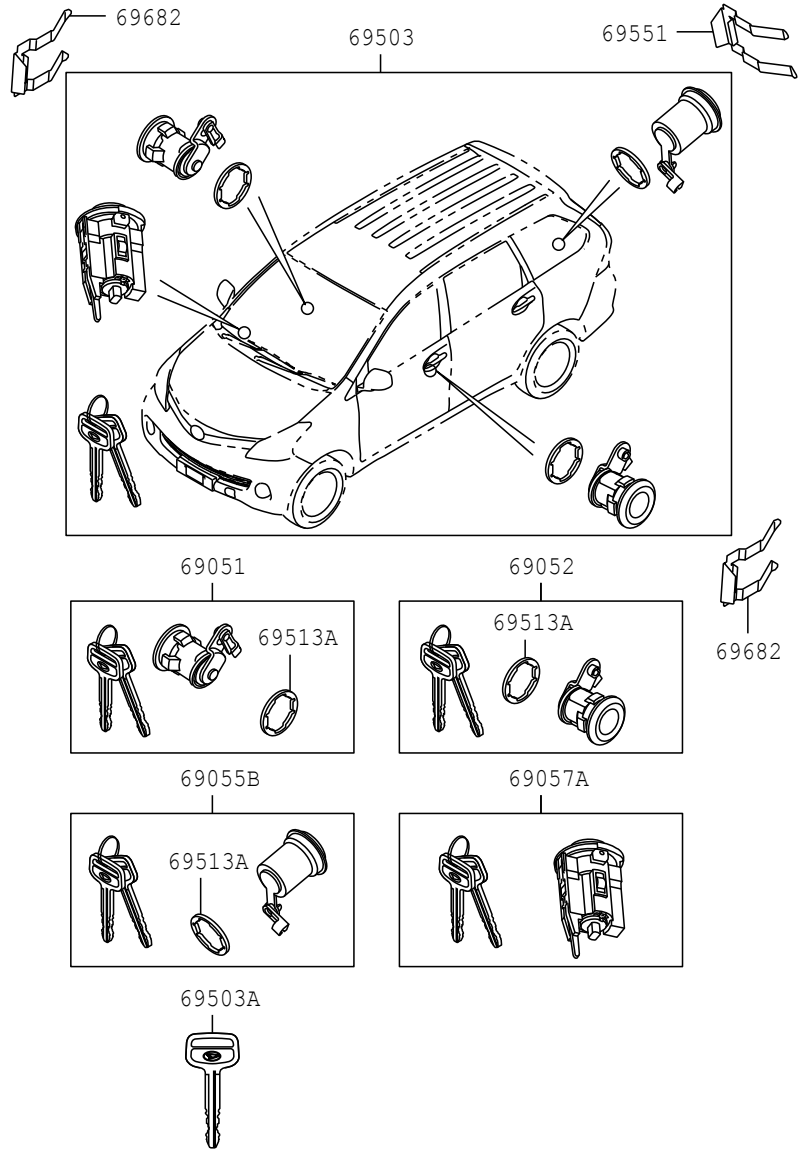

6765

677137

FIG.67-65 LOCK CYLINDER SET

(1507-)F653..LO ; (1507-)F650

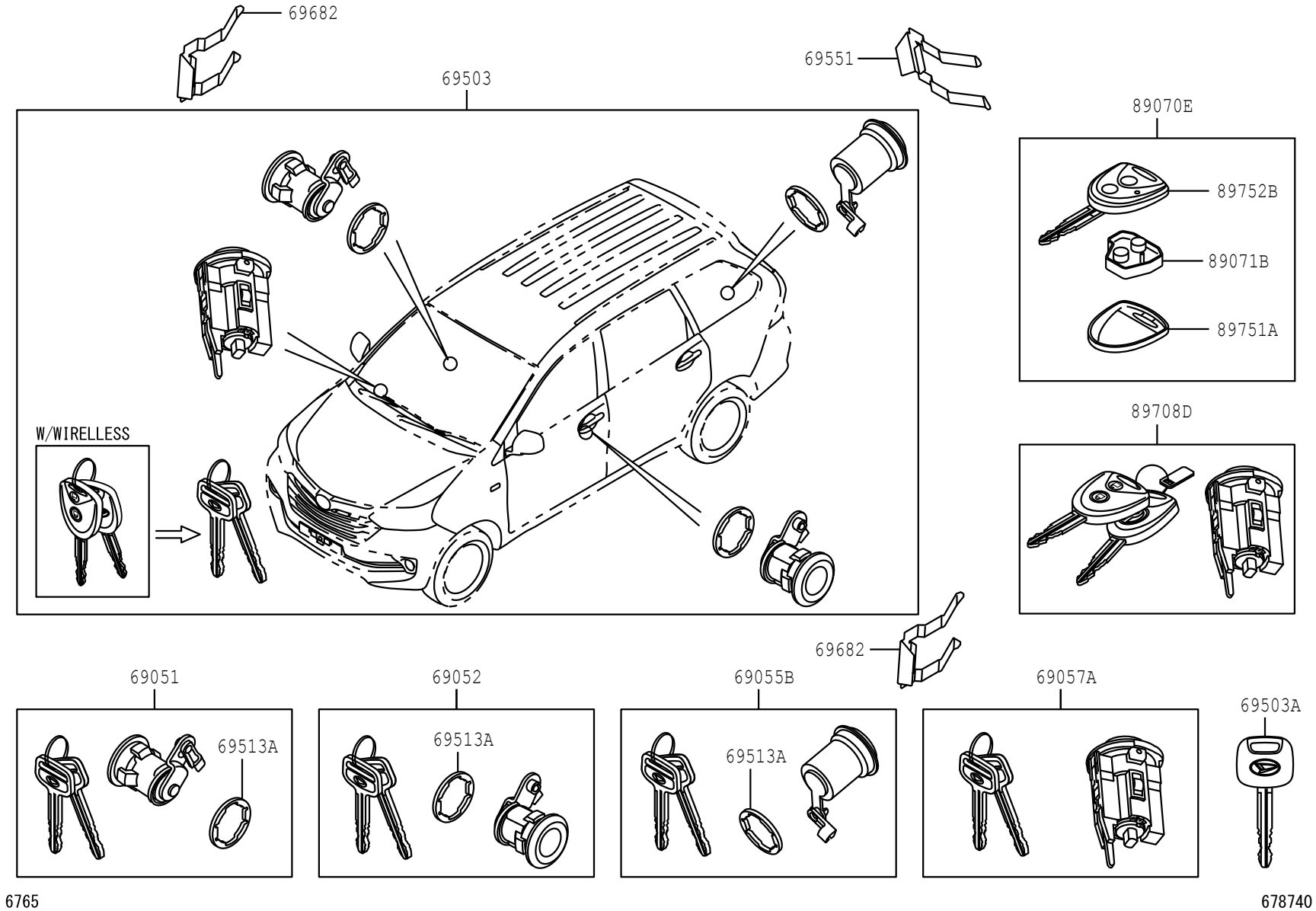

FIG.67-65 LOCK CYLINDER SET

(1507-)F653,654..STD

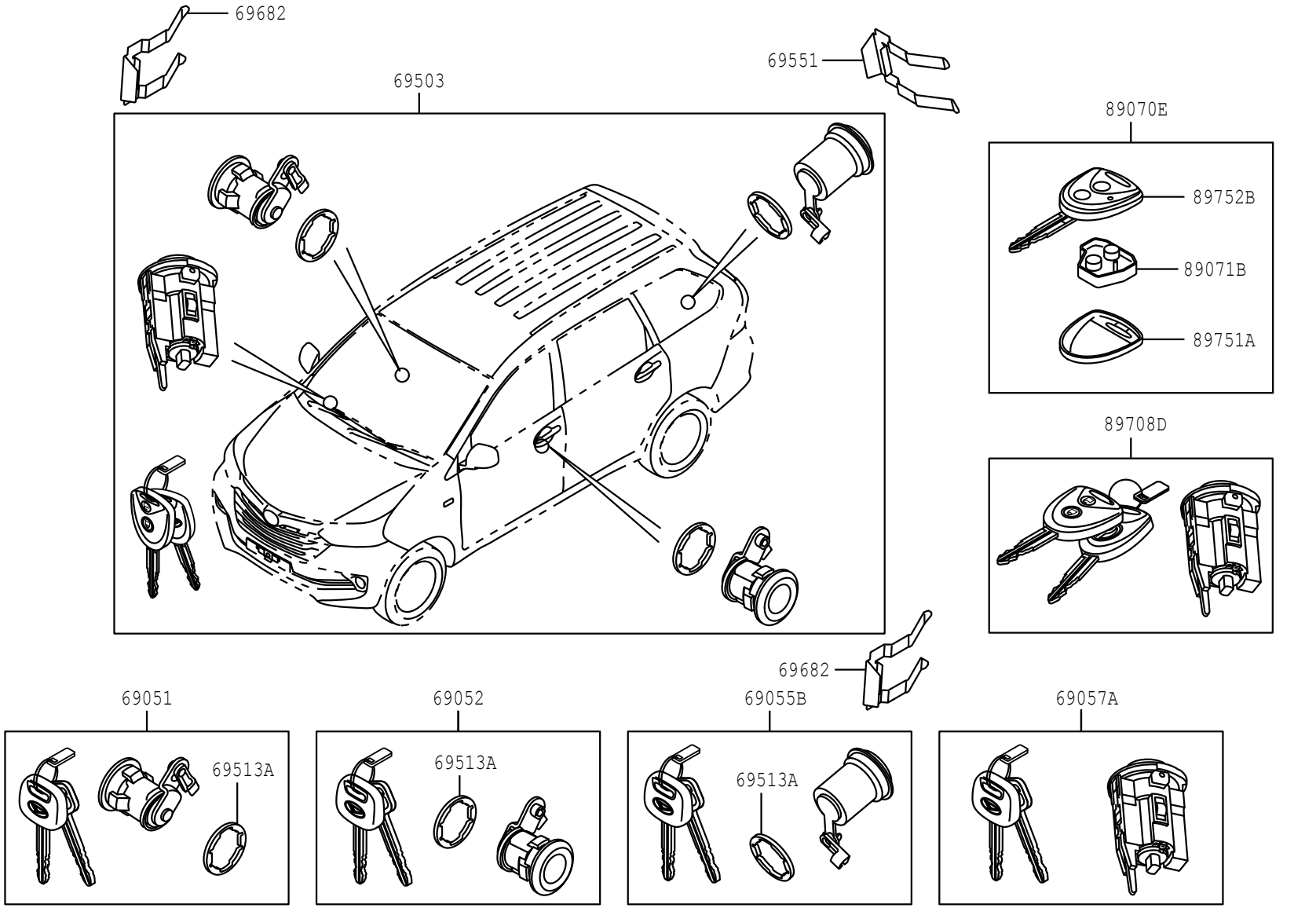

6765

678773

PROD_DATE	MODELS	SPEC CODE	DESCRIPTION	R/P	PART NUMBER	QYT	REV_REF FR	REV_REF TO
	69051		CYLINDER & KEY SET, DOOR LOCK, RH					
1111 - 1304	F65#				69051-BZ010-	1		
1305 - 1507	F65#				69051-BZ011-	1		
1507 - 1901	F650				69051-BZ011-	1		
1507 - 1901	F653..LO				69051-BZ011-	1		
1507 - 1901	F653..STD				69051-BZ260-	1		
1901 - 1910	F653..LO				69051-BZ011-	1		
1901 - 1910	F65#..STD				69051-BZ260-	1		
1911 - 2006	F653..LO				69051-BZ012-	1		
1911 - 2006	F65#..STD				69051-BZ261-	1		
2007 -	F653..LO				69051-BZ013-	1		
2007 -	F65#..STD				69051-BZ262-	1		
	69052		CYLINDER & KEY SET, DOOR LOCK, LH					
1111 - 1304	F65#				69052-BZ010-	1		
1305 - 1507	F65#				69052-BZ011-	1		
1507 - 1901	F650				69052-BZ011-	1		
1507 - 1901	F653..LO				69052-BZ011-	1		
1507 - 1901	F653..STD				69052-BZ160-	1		
1901 - 1910	F653..LO				69052-BZ011-	1		
1901 - 1910	F65#..STD				69052-BZ160-	1		
1911 - 2006	F653..LO				69052-BZ012-	1		
1911 - 2006	F65#..STD				69052-BZ161-	1		
2007 -	F653..LO				69052-BZ013-	1		
2007 -	F65#..STD				69052-BZ162-	1		

FIG.67-65 LOCK CYLINDER SET

PROD_DATE	MODELS	SPEC CODE	DESCRIPTION	R/P	PART NUMBER	QYT	REV_REF FR	REV_REF TO
	69055B		CYLINDER & KEY SET, BACK DOOR LOCK					
1111 - 1304	F65#				69055-BZ060-	1		
				#	(69055-BZ061-)	1		
1305 - 1507	F65#				69055-BZ170-	1		
1507 - 1901	F650				69055-BZ170-	1		
1507 - 1901	F653..LO				69055-BZ170-	1		
1507 - 1901	F653..STD				69055-BZ240-	1		
1901 - 1910	F653..LO				69055-BZ170-	1		
1901 - 1910	F65#..STD				69055-BZ240-	1		
1911 - 2006	F653..LO				69055-BZ171-	1		
1911 - 2006	F65#..STD				69055-BZ241-	1		
2007 -	F653..LO				69055-BZ172-	1		
2007 -	F65#..STD				69055-BZ242-	1		
	69057A		CYLINDER & KEY SET, IGNITION SWITCH LOCK					
1111 - 1305	F65#				69057-BZ010-	1		
				#	(69057-BZ011-)	1		
1305 - 1507	F65#				69057-BZ210-	1		
1507 - 1901	F650				69057-BZ210-	1		
1507 - 1901	F653..LO				69057-BZ210-	1		
1507 - 1901	F653..STD				69057-BZ220-	1		
1901 - 1910	F653..LO				69057-BZ210-	1		
1901 - 1910	F65#..STD				69057-BZ220-	1		
1911 - 2006	F653..LO				69057-BZ211-	1		
1911 - 2006	F65#..STD				69057-BZ221-	1		
2007 -	F653..LO				69057-BZ212-	1		
2007 -	F65#..STD				69057-BZ222-	1		

PROD_DATE	MODELS	SPEC CODE	DESCRIPTION	R/P	PART NUMBER	QYT	REV_REF FR	REV_REF TO
	+----------+							
	| 69503 | CYLINDER SET, LOCK							
	+----------+							
1111 - 1304	F65#				69005-BZ360-	1		
1305 - 1507	F65#				69005-BZ361-	1		
1507 - 1607	F650..STD				69005-BZ361-	1		
1507 - 1607	F650..LO				69005-BZ570-	1		
1507 - 1901	F653..STD				69005-BZ560-	1		
1507 - 1901	F653..LO				69005-BZ570-	1		
1901 -	F65#..STD				69005-BZ560-	1		
1901 -	F653..LO				69005-BZ570-	1		
	+----------+							
	| 69503A | KEY, BLANK							
	+----------+							
1111 - 1304	F65#		BLANK KEY		69515-BZ030-	1		
				#	(69515-BZ031-)	1		
1305 - 1507	F65#		BLANK KEY		69515-BZ340-	1		
1507 - 1607	F650..STD		BLANK KEY		69515-BZ340-	1		
	+----------+							
	| 69513A | PAD, DOOR CYLINDER							
	+----------+							
1111 - 1507	F65#				69513-BZ010-	3		
1507 - 1901	F65#				69513-BZ010-	3		
1901 -	F65#				69513-BZ010-	3		
	+----------+							
	| 69551 | RETAINER, BACK DOOR LOCK CYLINDER							
	+----------+							
1111 - 1507	F65#				61317-BZ020-	1		
				#	(69682-87201-)	1		
1507 - 1607	F650				61317-BZ020-	1		
				#	(69682-87201-)	1		
1507 - 1901	F653				61317-BZ020-	1		
				#	(69682-87201-)	1		
1901 -	F65#				61317-BZ020-	1		
				#	(69682-87201-)	1		

FIG.67-65 LOCK CYLINDER SET

PROD_DATE	MODELS	SPEC CODE	DESCRIPTION	R/P	PART NUMBER	QYT	REV_REF FR	REV_REF TO
	+----------+							
	| 69682 | RETAINER, LOCK CYLINDER							
	+----------+							
1111 - 1507	F65#				69682-B2010-	2		
1507 - 1607	F650				69682-B2010-	2		
1507 - 1901	F653				69682-B2010-	2		
1901 -	F65#				69682-B2010-	2		
	+----------+							
	| 89070E | TRANSMITTER ASSY, DOOR CONTROL							
	+----------+							
1507 - 1901	F65#..LO				89070-BZ120-	1		
1507 - 1901	F653..STD				89070-BZ130-	1		
1901 -	F653..LO				89070-BZ120-	1		
1901 -	F65#..STD				89070-BZ130-	1		
	+----------+							
	| 89071B | MODULE SET, TRANSMITTER SUB-ASSY, DOOR CONTROL							
	+----------+							
1507 - 1901	F653				89071-BZ050-	1		
1507 - 1901	F650..LO				89071-BZ050-	1		
1901 -	F65#				89071-BZ050-	1		
	+----------+							
	| 89708D | CYLINDER SET, LOCK W/TRANSPONDER KEY TRANSMITTER							
	+----------+							
1507 - 1901	F65#..LO				89708-BZ040-	1		
1507 - 1901	F653..STD				89708-BZ050-	1		
1901 -	F653..LO				89708-BZ040-	1		
1901 -	F65#..STD				89708-BZ050-	1		
	+----------+							
	| 89751A | COVER, TRANSMITTER HOUSING							
	+----------+							
1507 - 1901	F653				89751-BZ040-	1		
1507 - 1901	F650..LO				89751-BZ040-	1		
1901 -	F65#				89751-BZ040-	1		

FIG.67-65 LOCK CYLINDER SET

PROD_DATE	MODELS	SPEC CODE	DESCRIPTION	R/P	PART NUMBER	QYT	REV_REF	
							FR	TO
	+----------+ | 89752B | CASE, TRANSMITTER HOUSING +----------+							
1507 - 1901	F65#..LO				89752-BZ040-	1		
1507 - 1901	F653..STD				89752-BZ120-	1		
1901 -	F653..LO				89752-BZ040-	1		
1901 -	F65#..STD				89752-BZ120-	1		

(1111-1507)F650..STD

RR NO.1 SEAT (RH) ILLUST NO. 1 OF 2

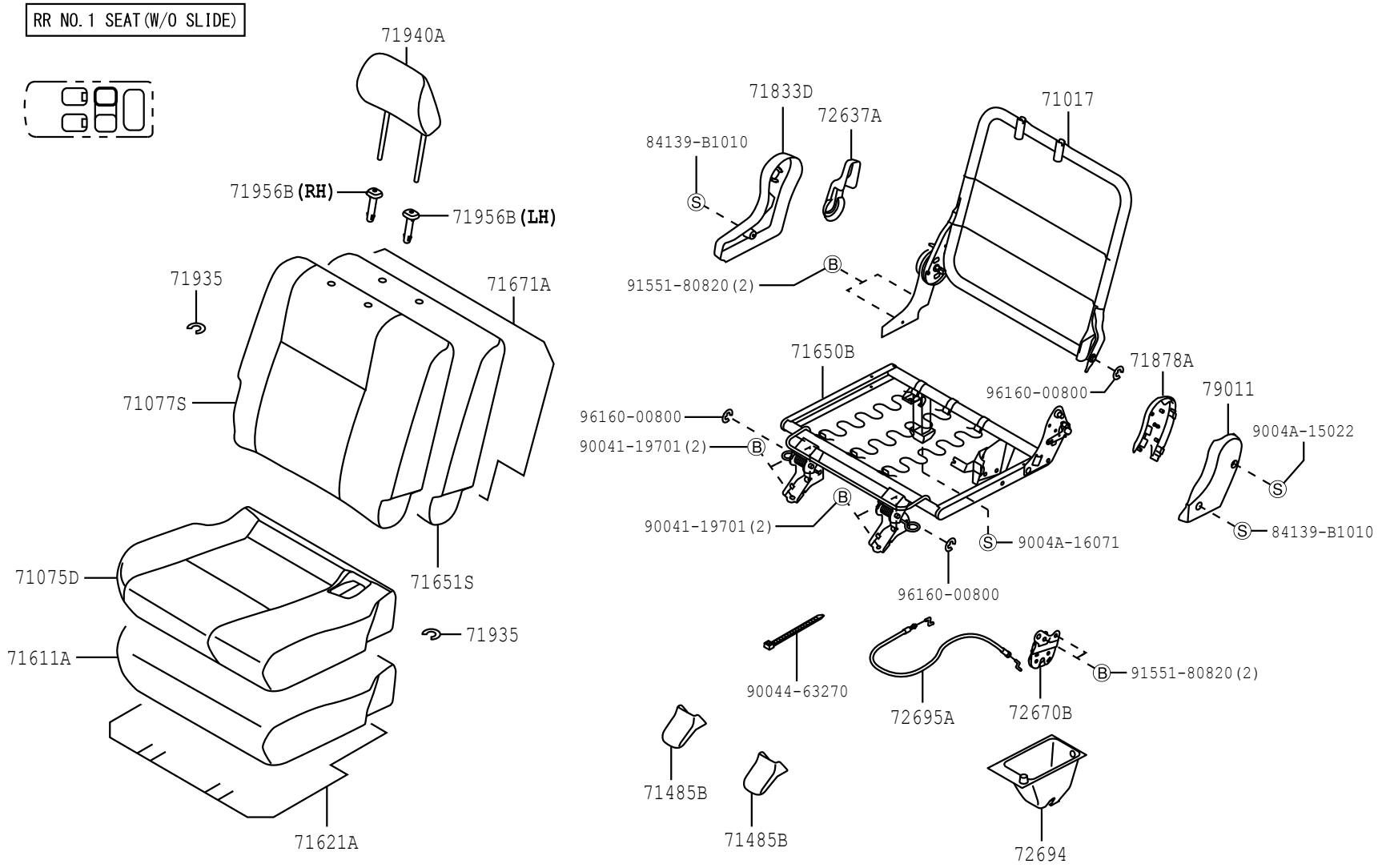

717484-C

FIG.71-51 SEAT & SEAT TRACK

(1111-1507)F651 ; (1111-1507)F650..LO

RR NO.1 SEAT (RH) ILLUST NO. 2 OF 2

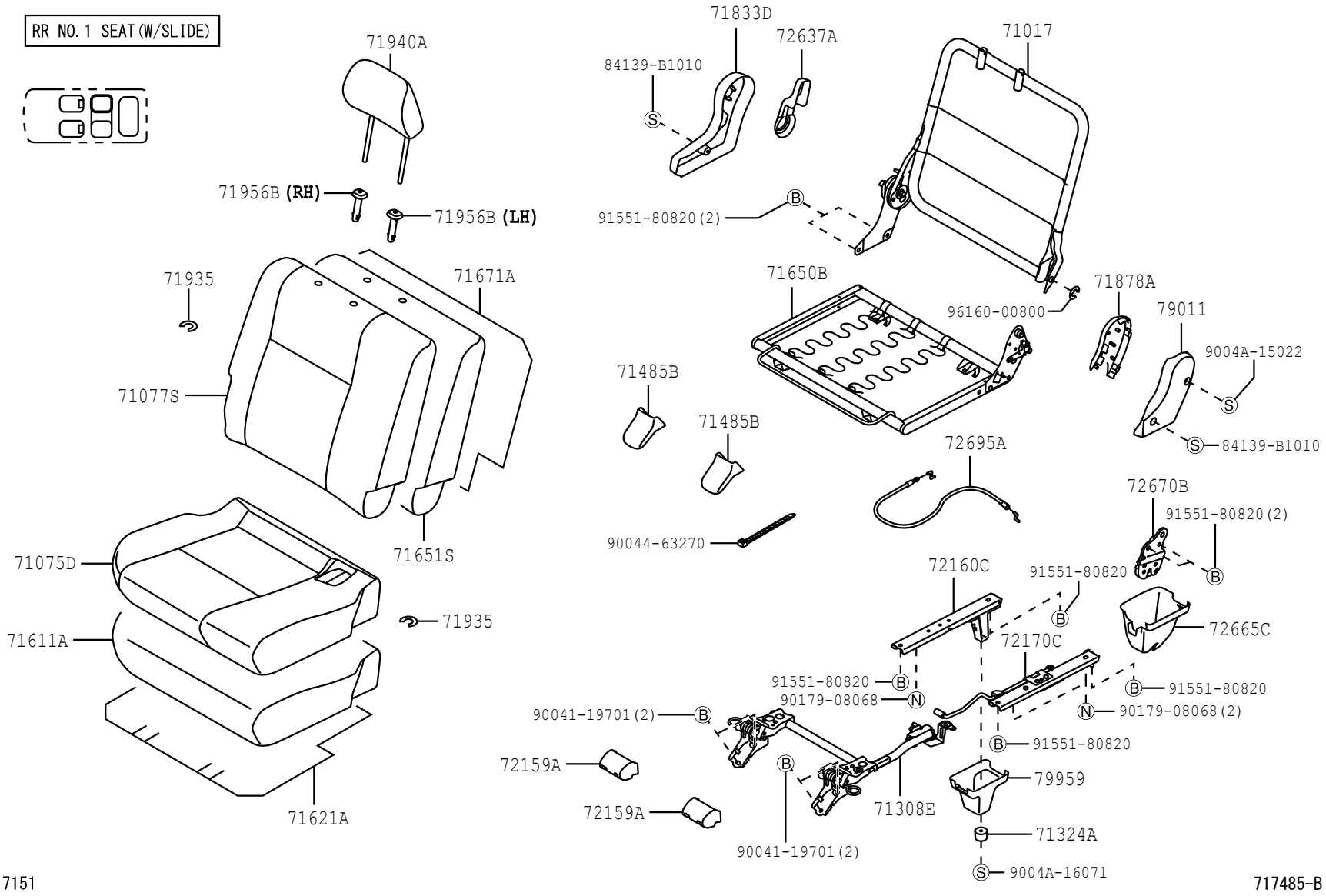

7151

717485-B

(1111-1507)F650..STD

RR NO.1 SEAT (LH) ILLUST NO. 1 OF 2

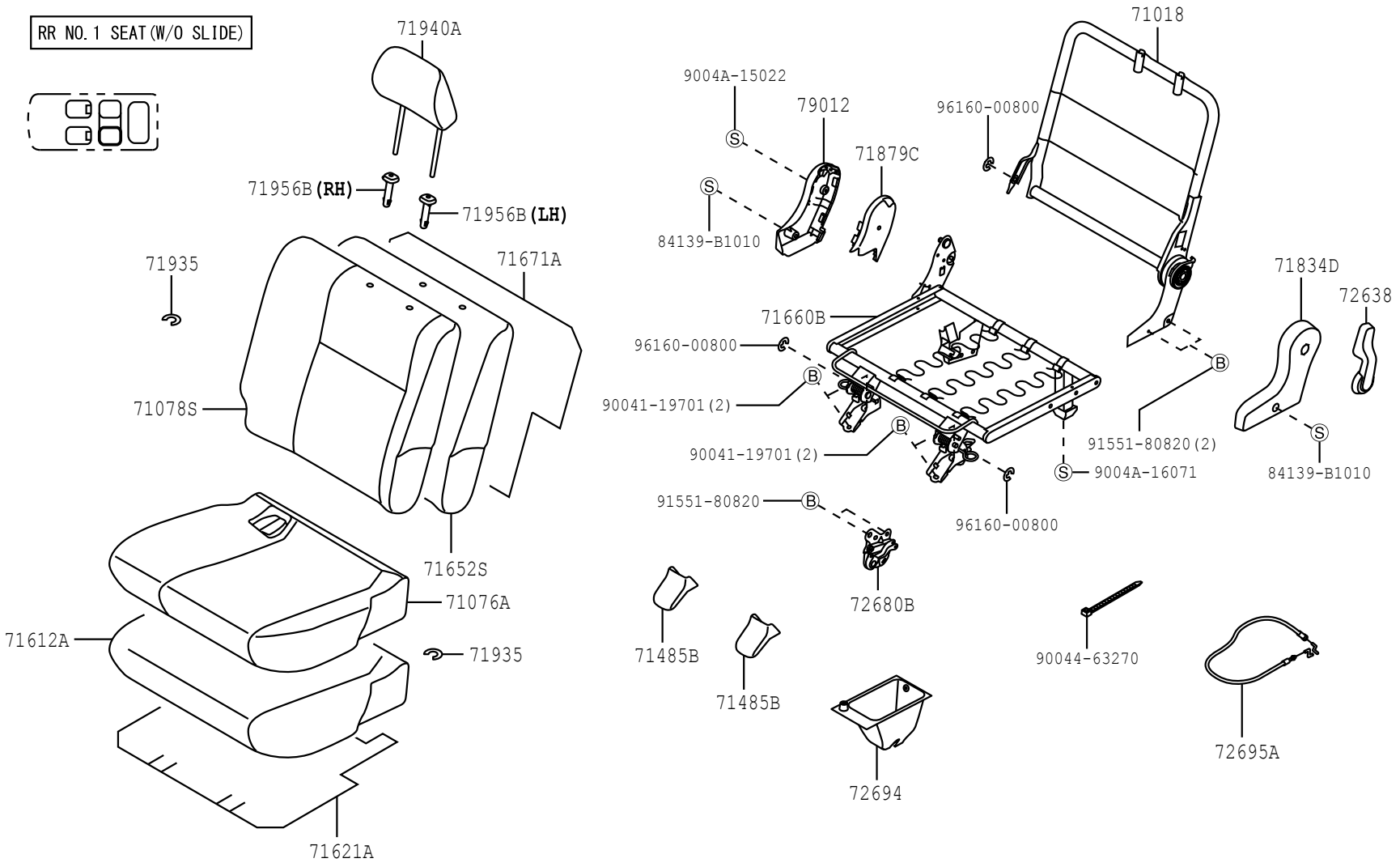

7151

717486-C

(1111-1507)F651 ; (1111-1507)F650..LO

RR NO.1 SEAT (LH) ILLUST NO. 2 OF 2

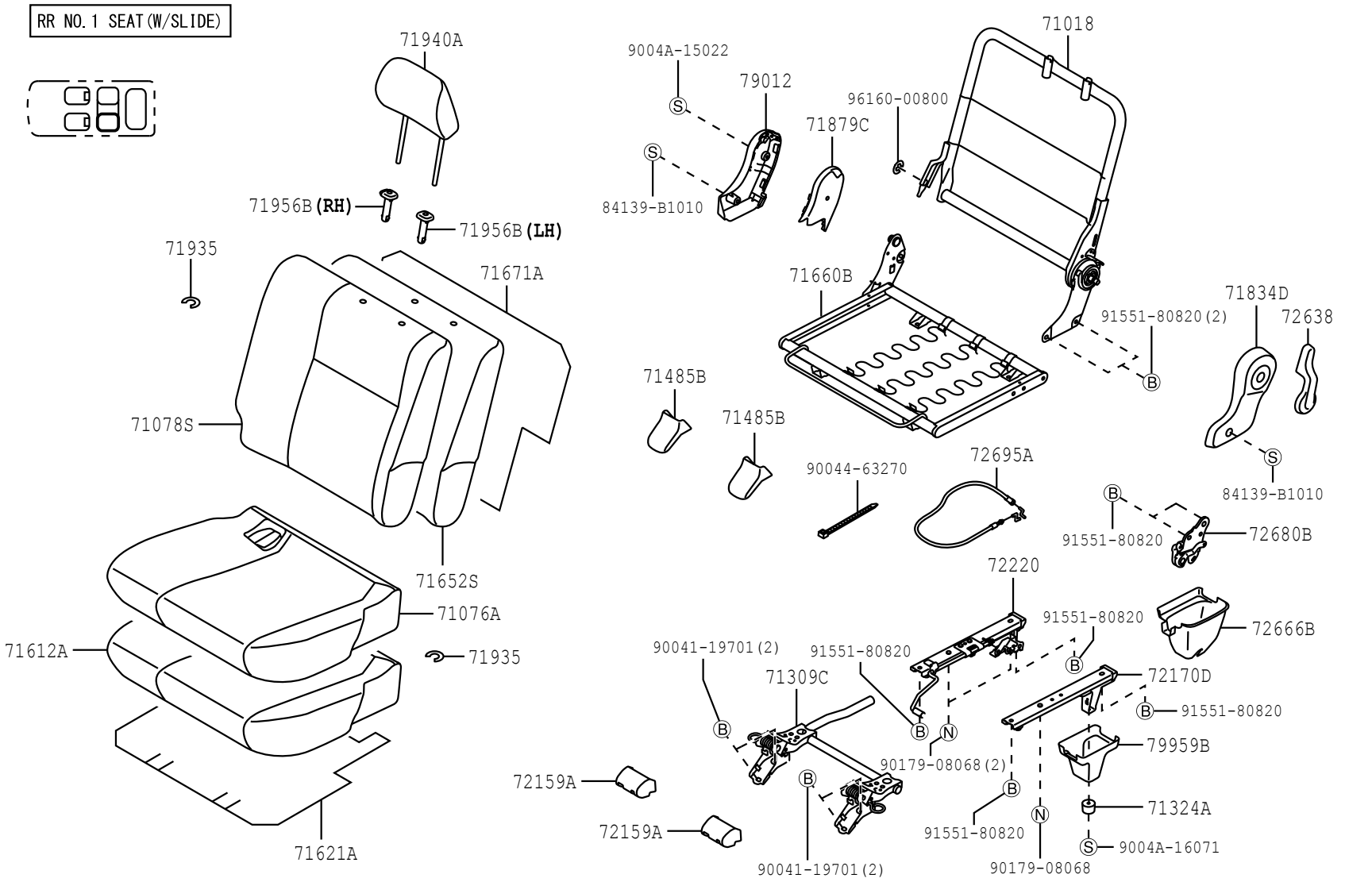

7151

717487-C

FIG. 71-51 SEAT & SEAT TRACK

(1111-1312)F650..STD

RR NO. 2 SEAT

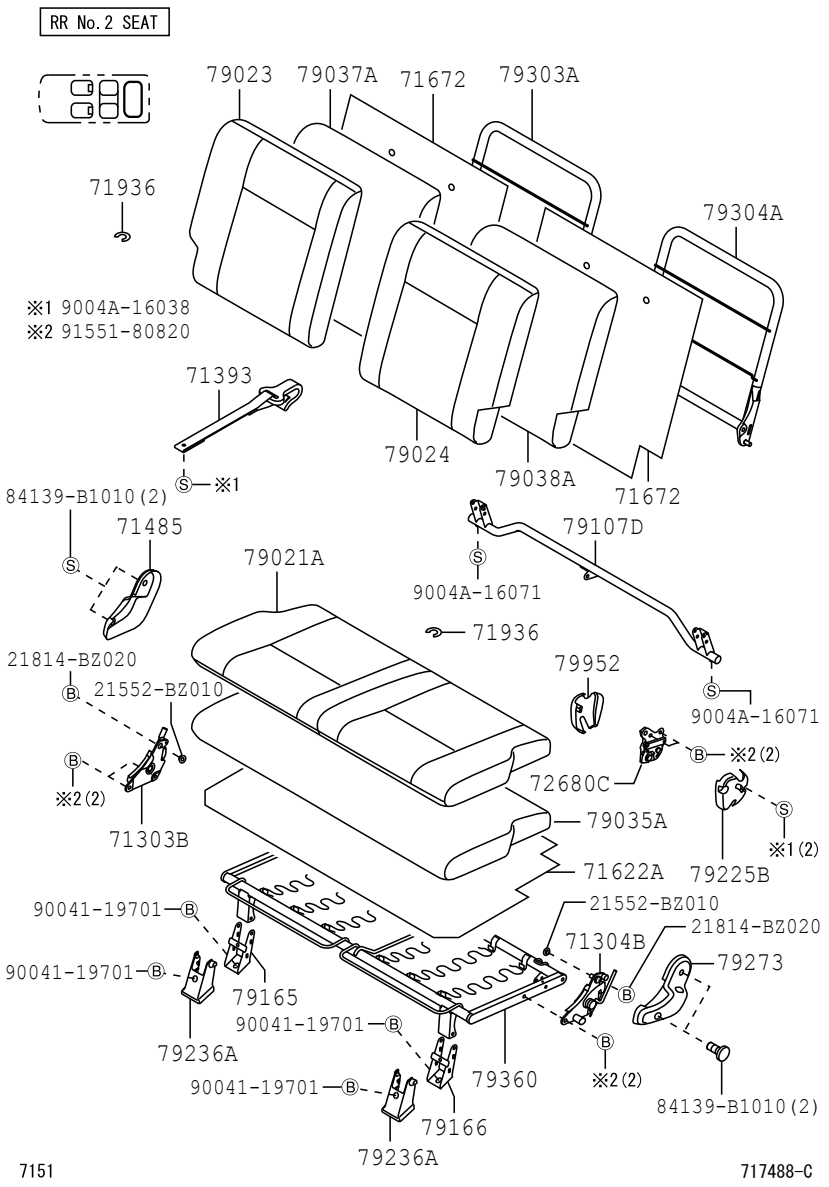

FIG. 71-51 SEAT & SEAT TRACK

(1305-1507)

FRONT SEAT (RH) ILLUST NO. 1 OF 2

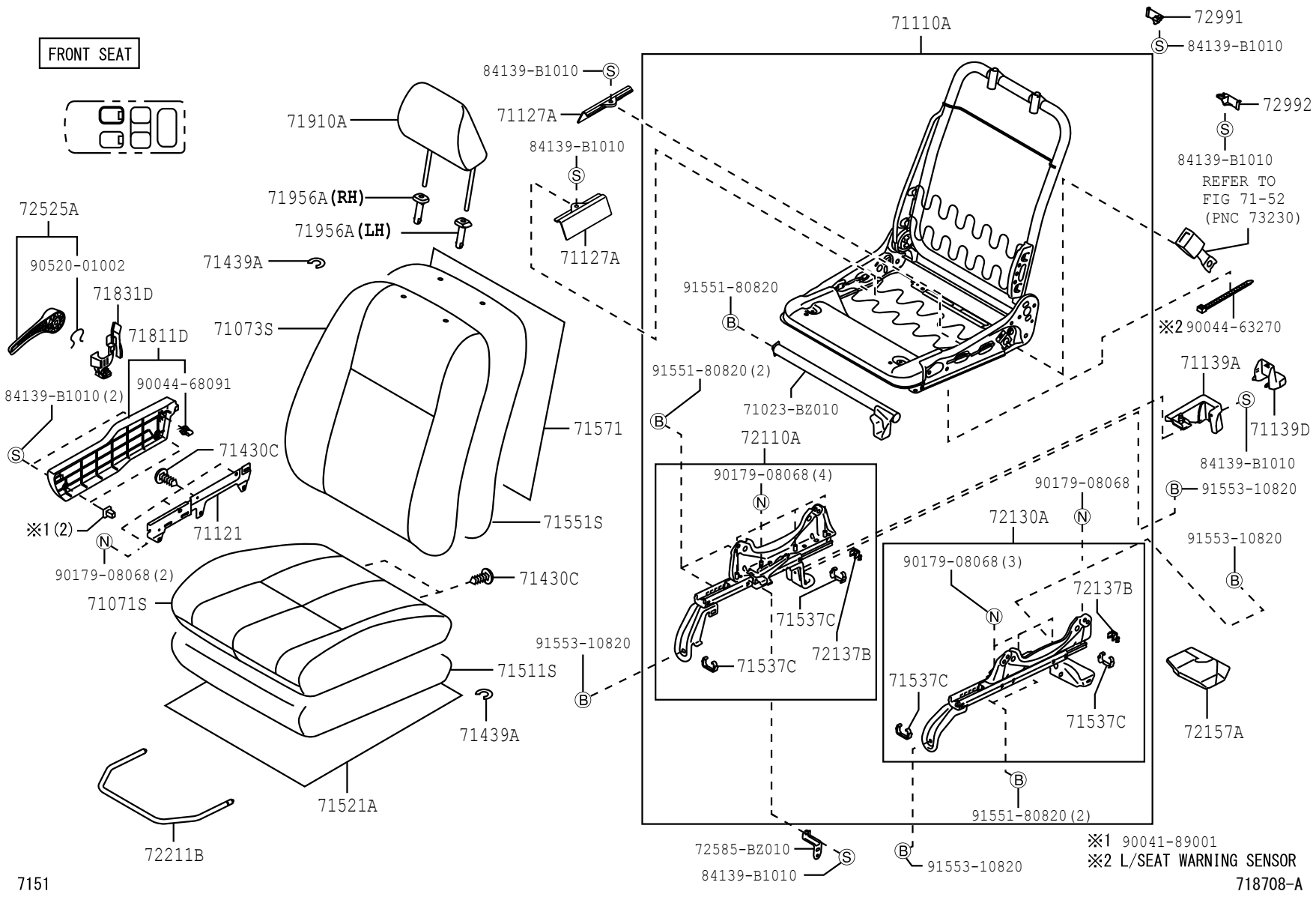

FIG. 71-51 SEAT & SEAT TRACK

(1111-1305)

FRONT SEAT (RH) ILLUST NO. 1 OF 2

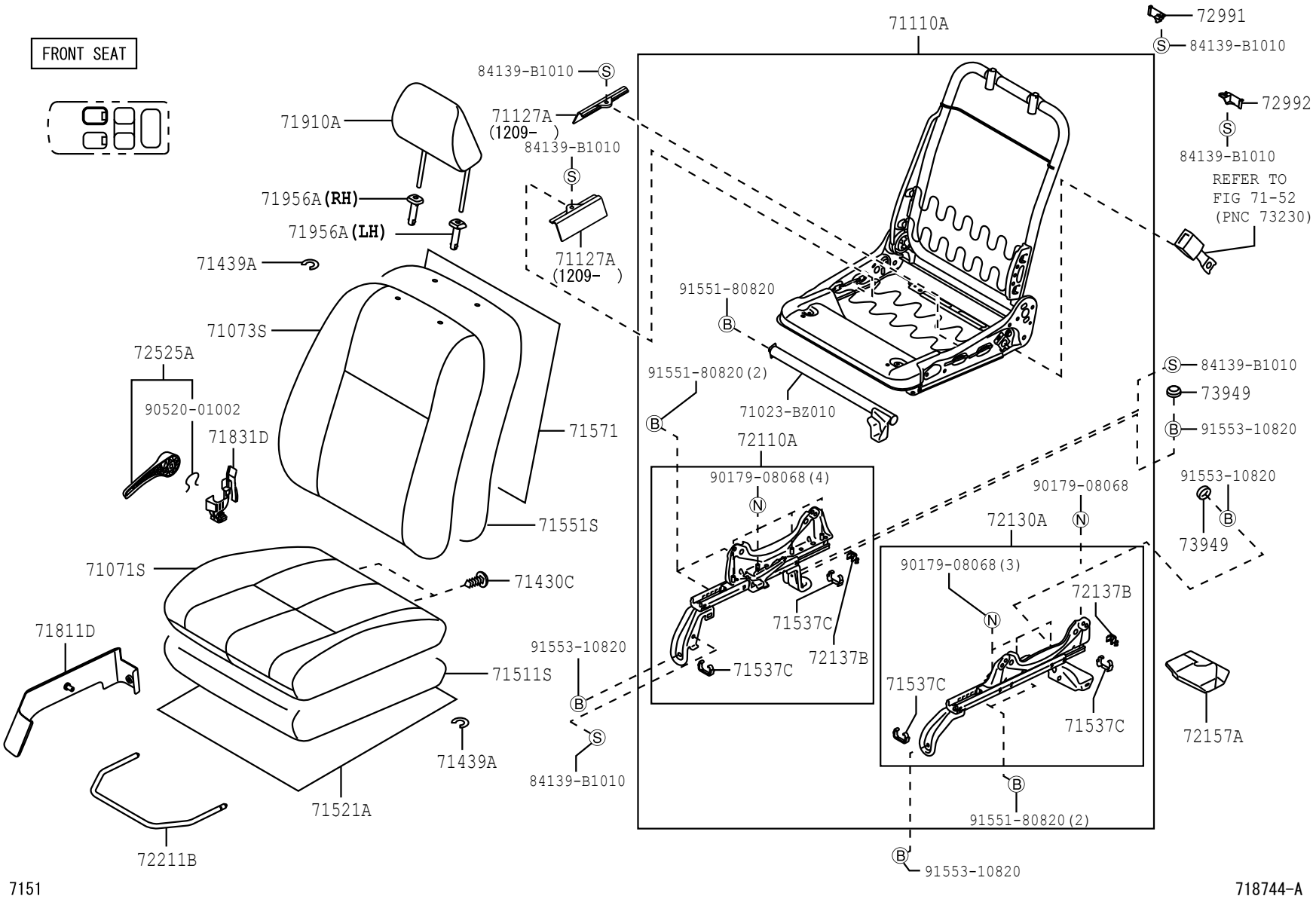

7151

718744-A

FIG. 71-51 SEAT & SEAT TRACK

(1111-1305)

FRONT SEAT (LH) ILLUST NO. 2 OF 2

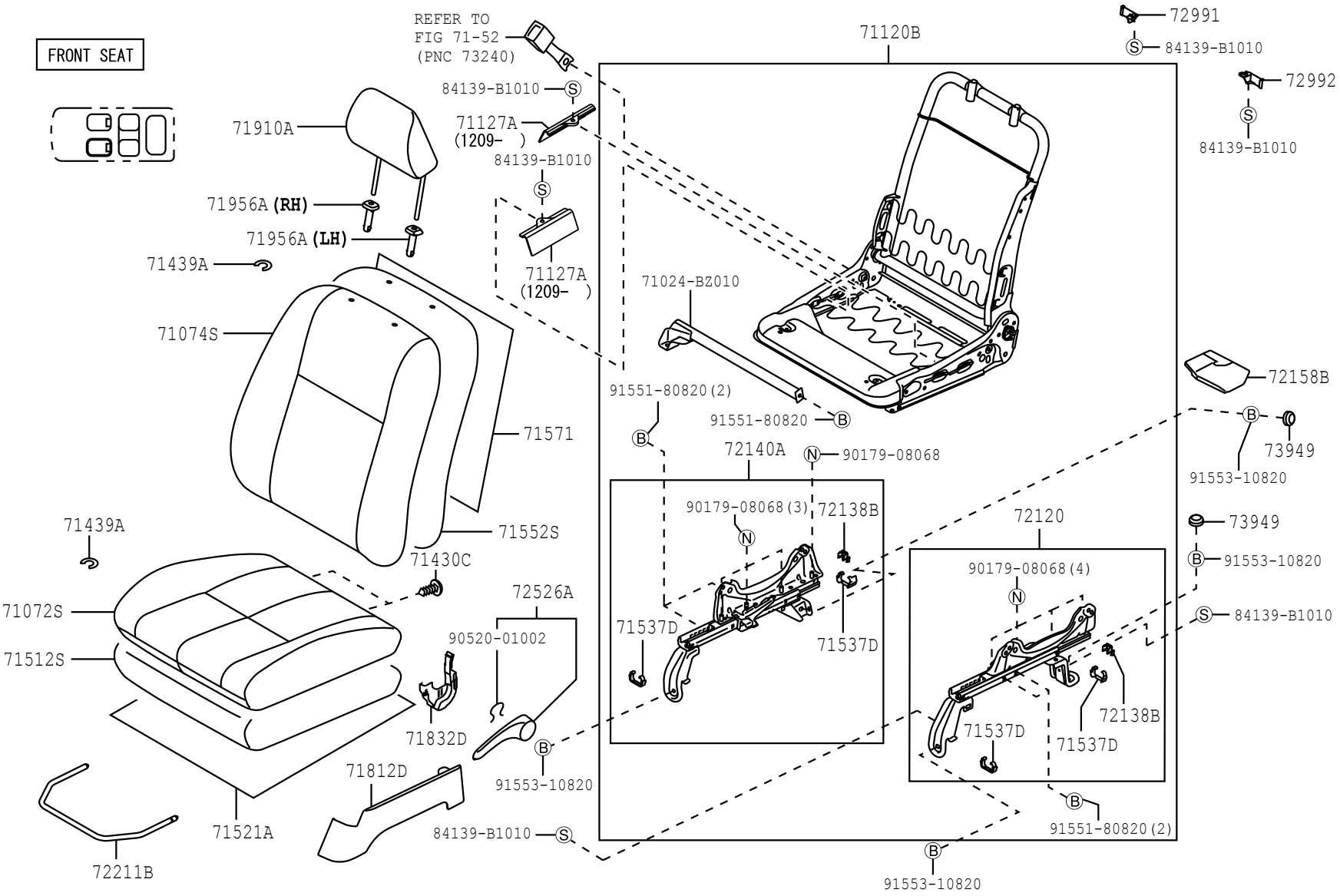

7151 718745-A

FIG. 71-51 SEAT & SEAT TRACK

(1305-1507)

FRONT SEAT (LH) ILLUST NO. 2 OF 2

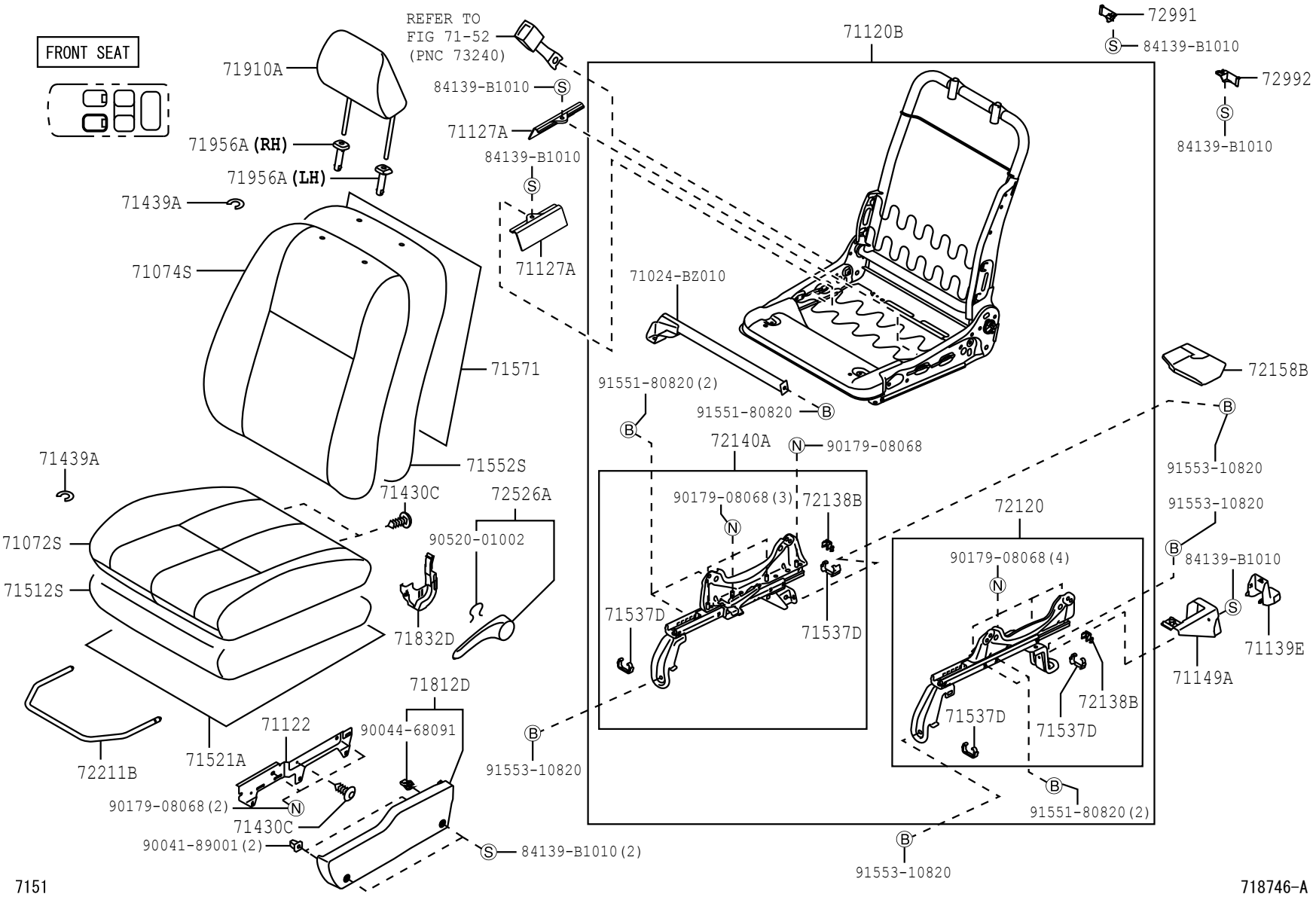

(1312-1507)F651 ; (1312-1507)F650..LO

RR NO. 2 SEAT

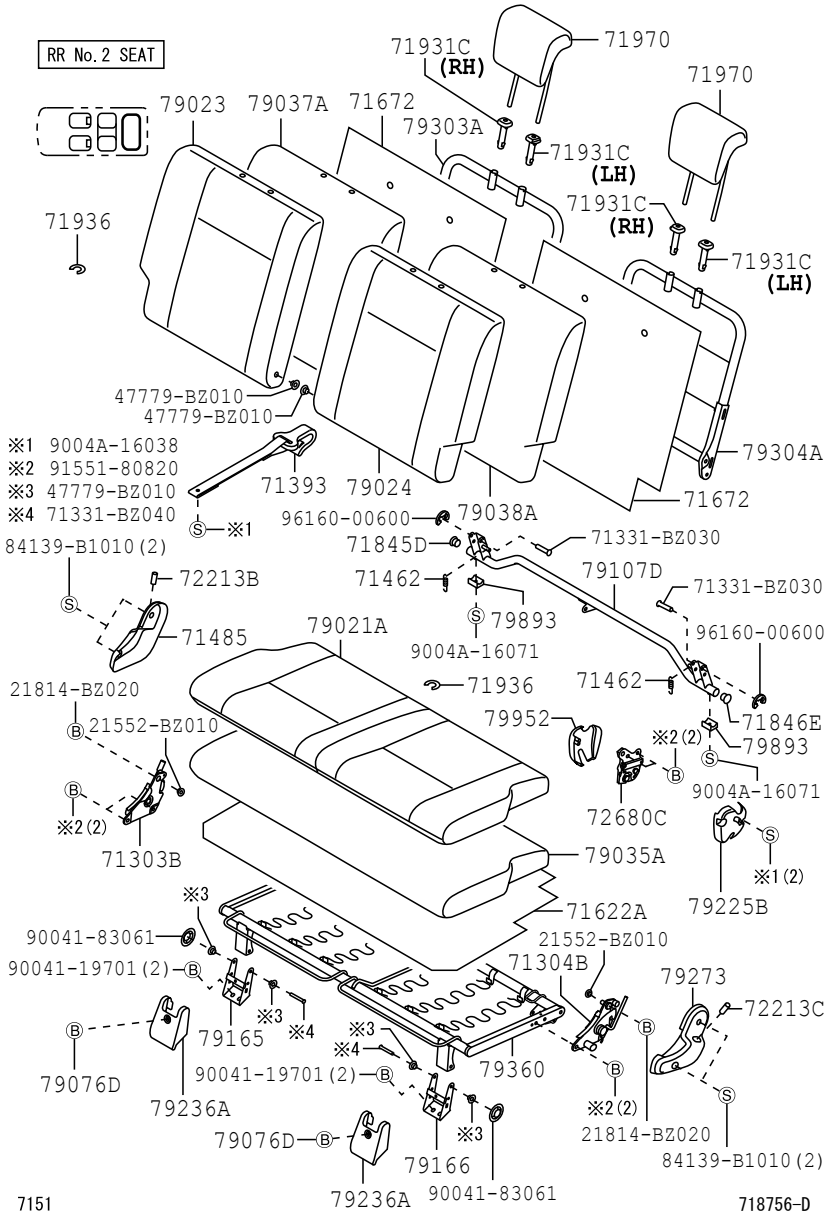

(1312-1507)F650..STD

RR NO. 2 SEAT

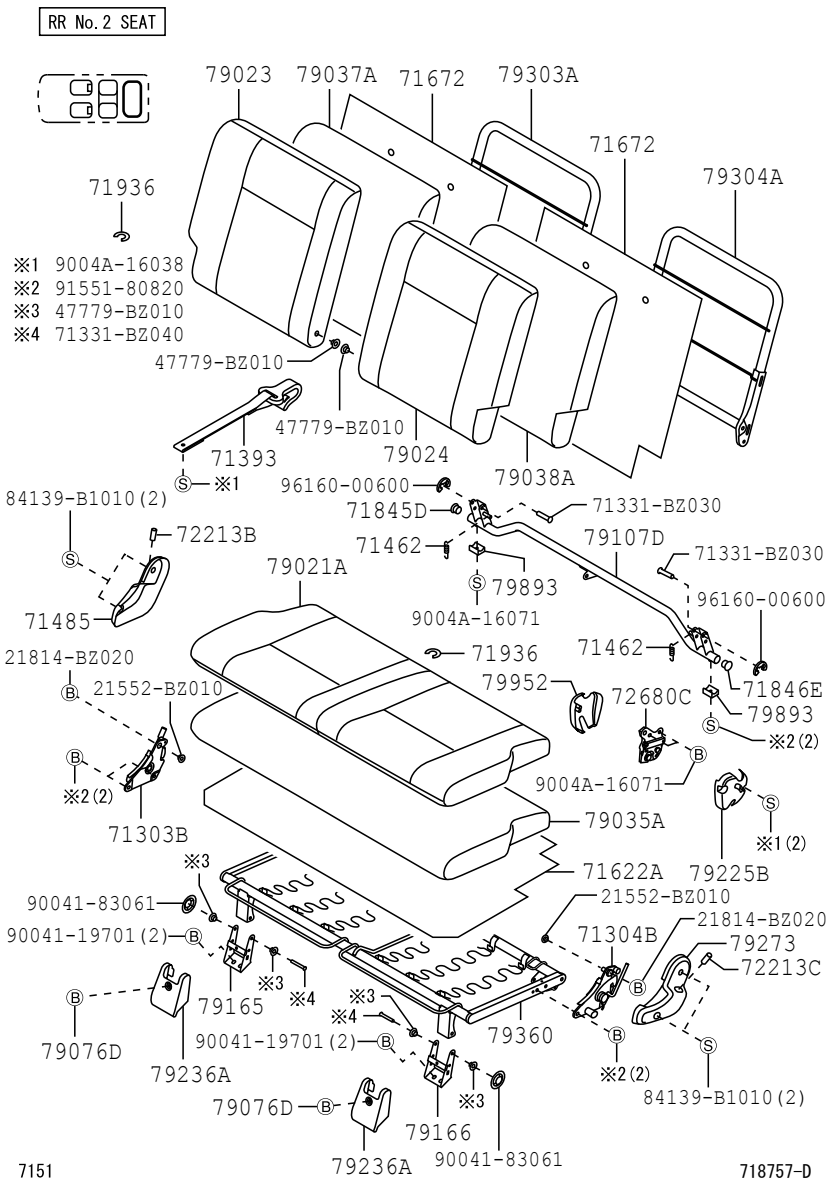

FIG. 71-51 SEAT & SEAT TRACK

(1507-1607)F650

RR NO. 2 SEAT(BENCH TYPE)

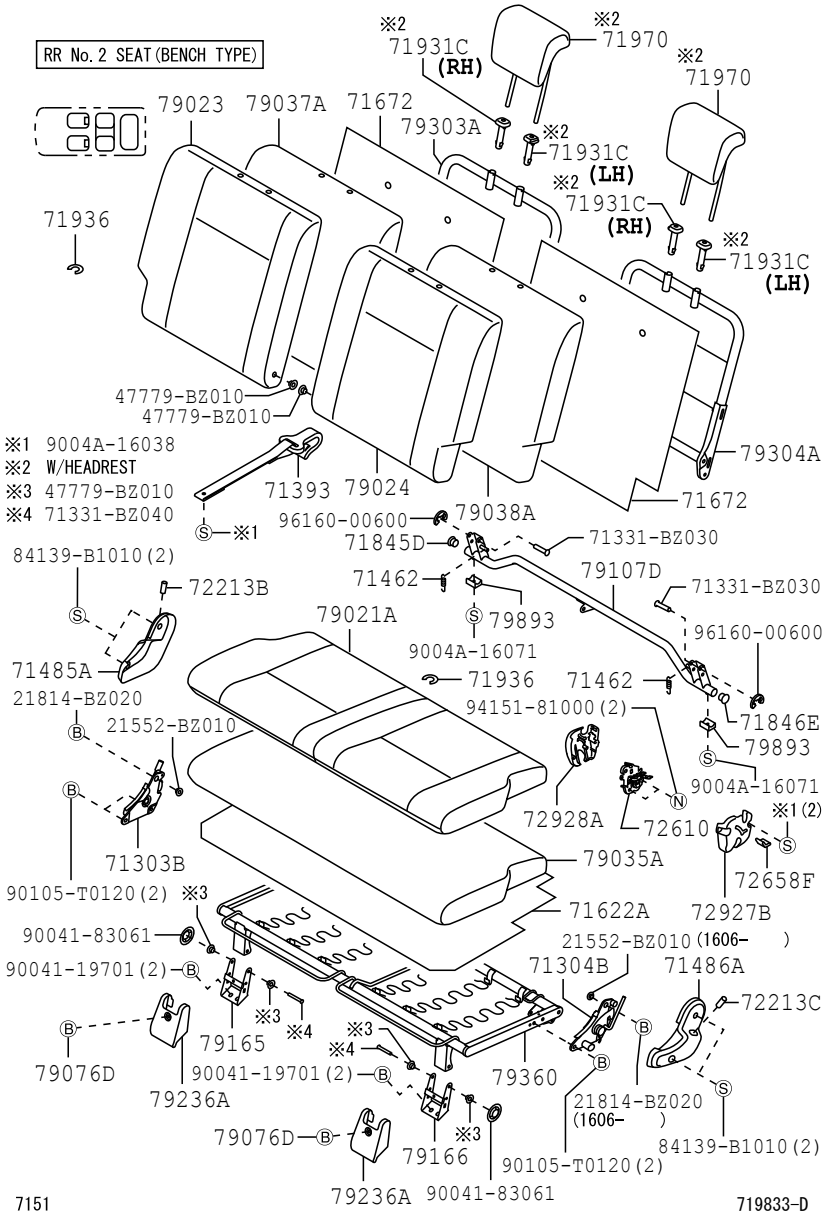

FIG. 71-51 SEAT & SEAT TRACK

(1507-)

FRONT SEAT(RH) ILLUST NO. 1 OF 2

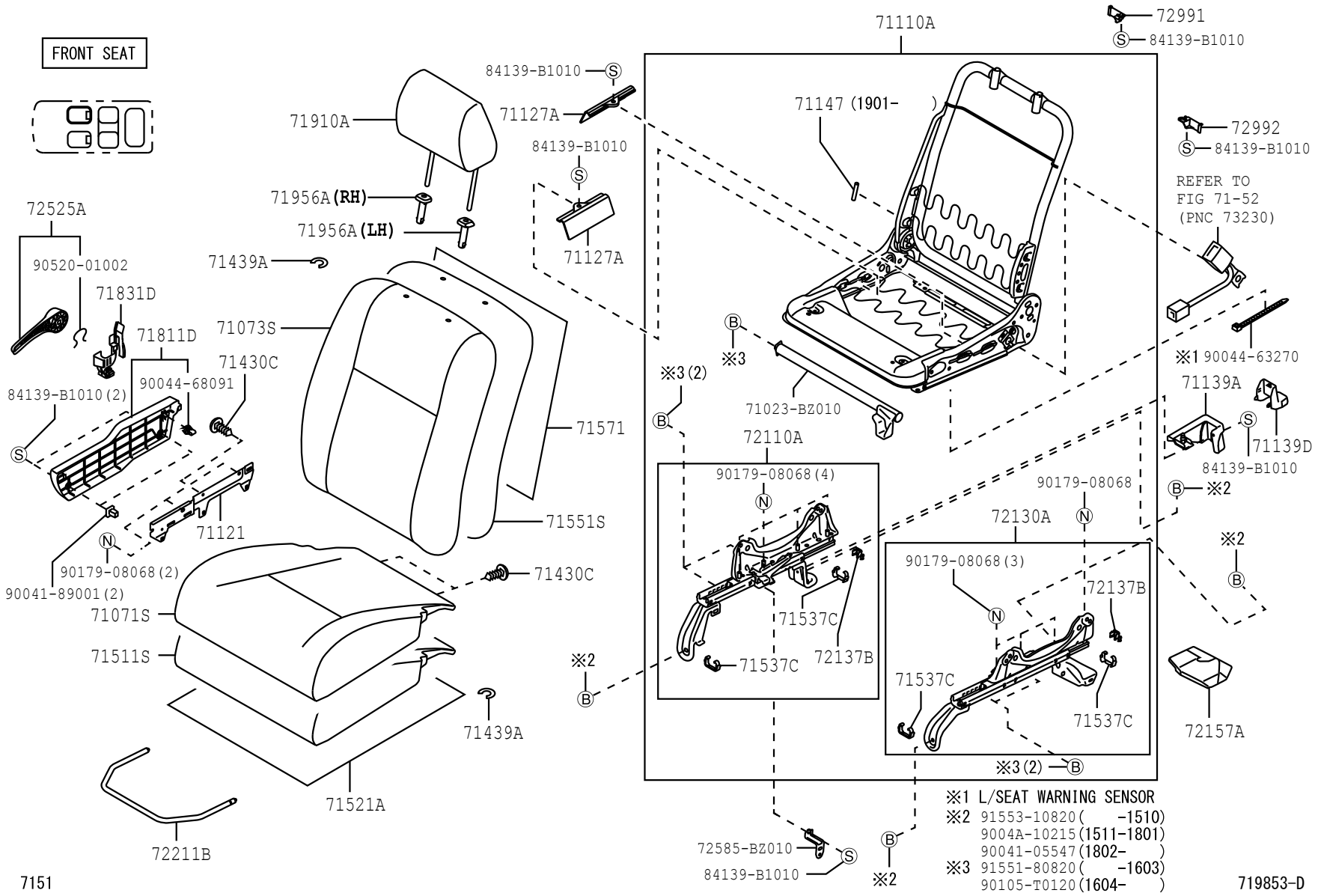

FIG. 71-51 SEAT & SEAT TRACK

(1507-)

FRONT SEAT(LH) ILLUST NO. 2 OF 2

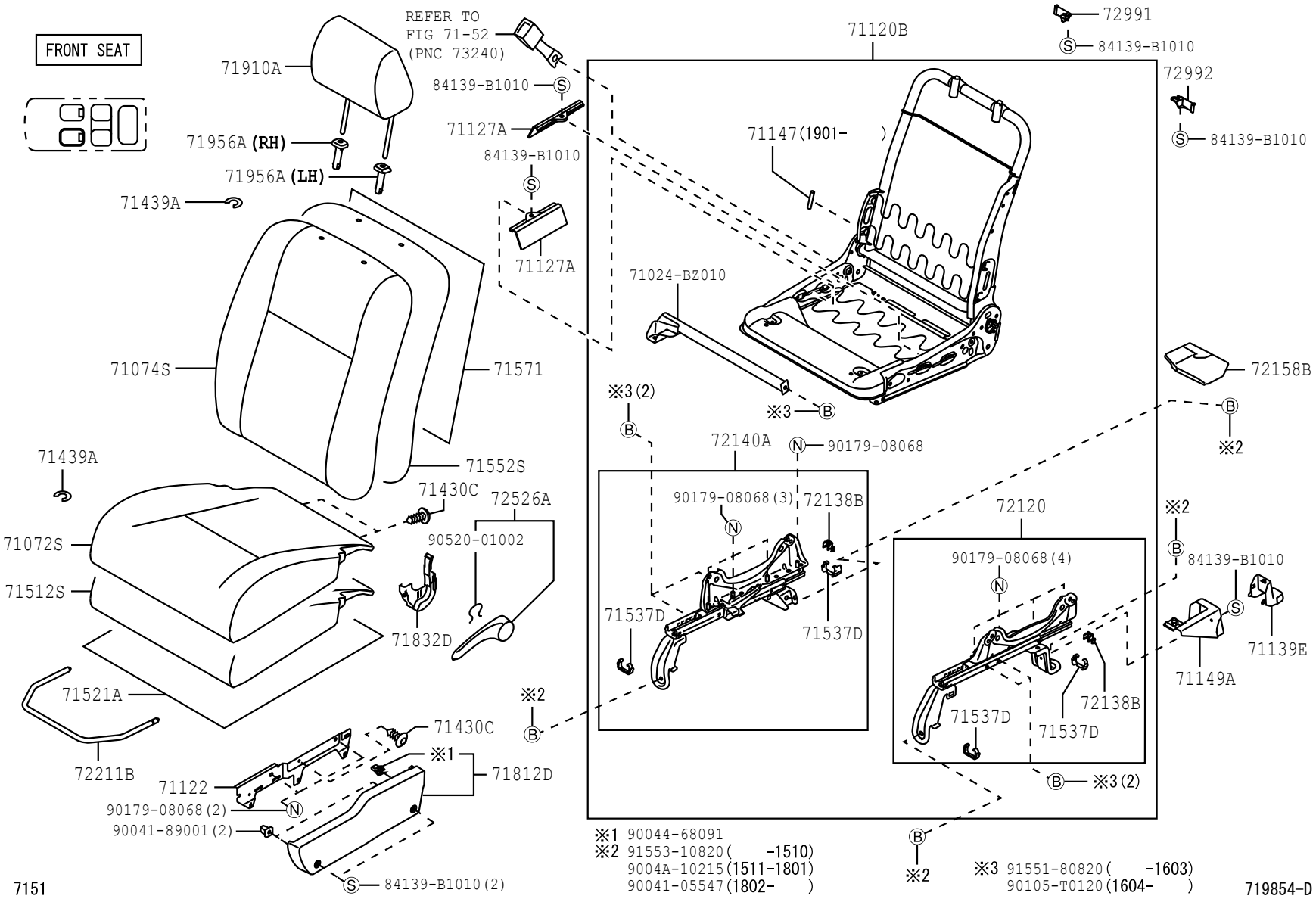

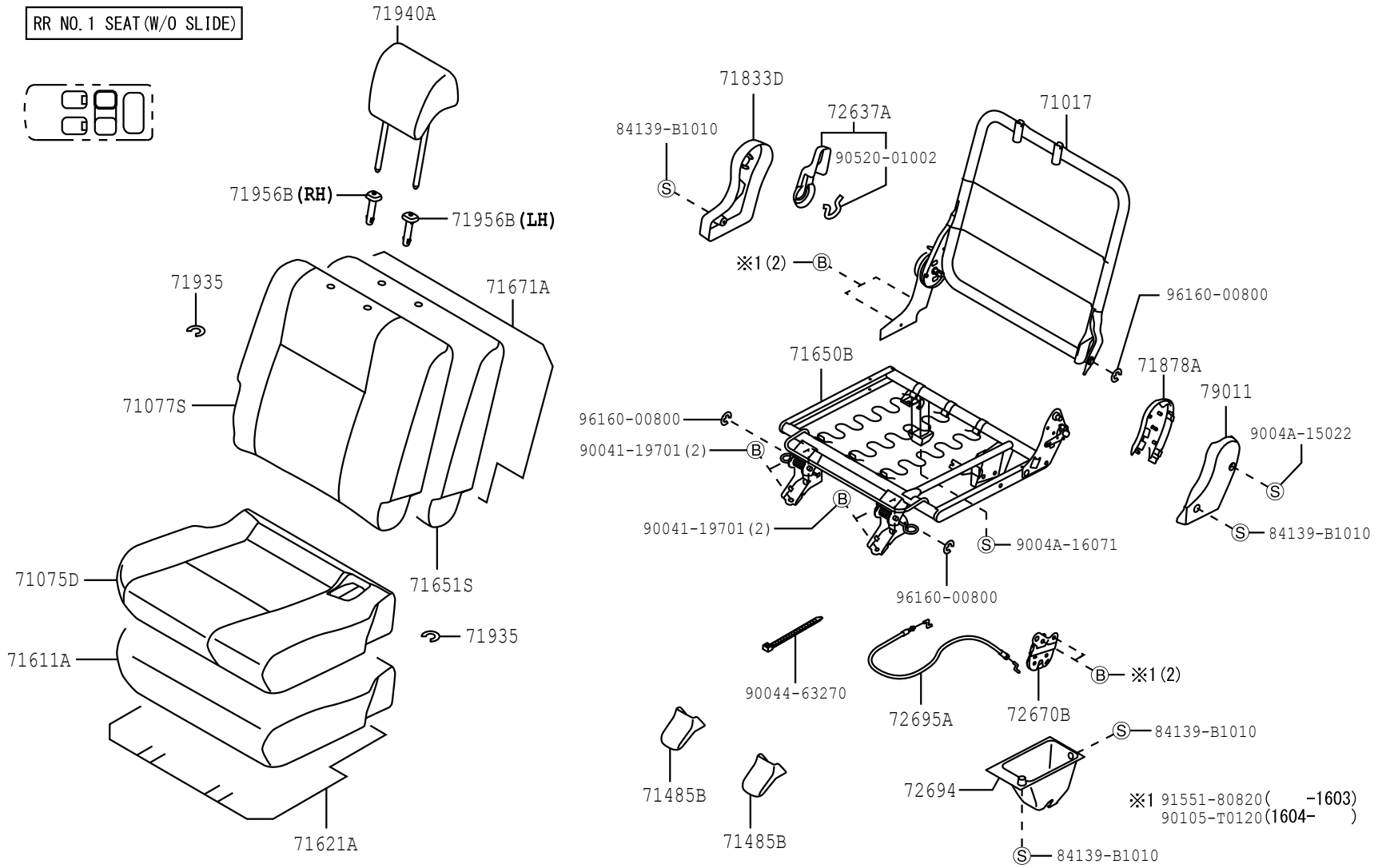

7151

719857-C

(1507-1607)F650

RR NO.1 SEAT(LH) ILLUST NO. 2 OF 2

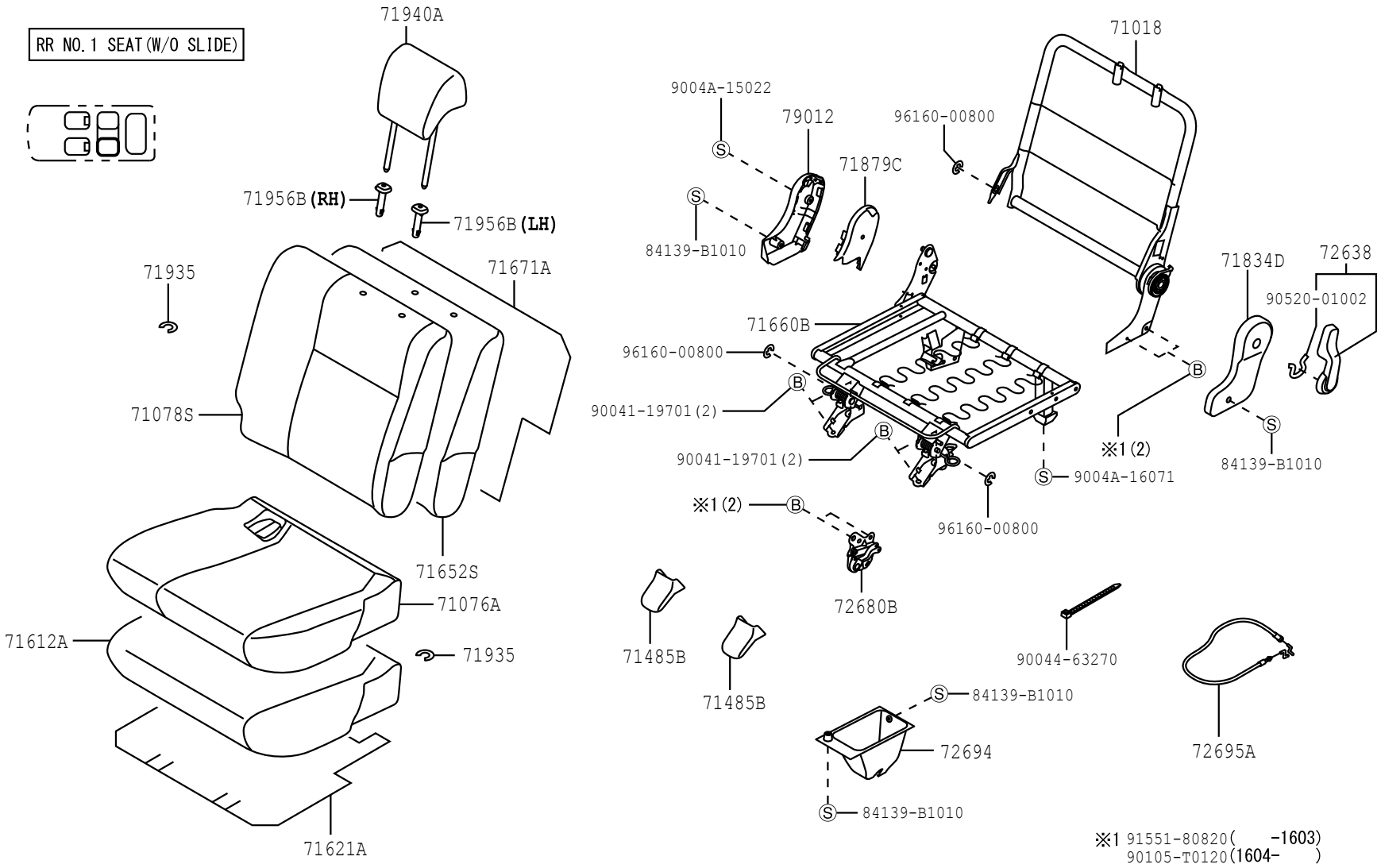

7151

719858-C

FIG. 71-51 SEAT & SEAT TRACK

(1507-)

RR NO. 1 SEAT(RH) ILLUST NO. 1 OF 2

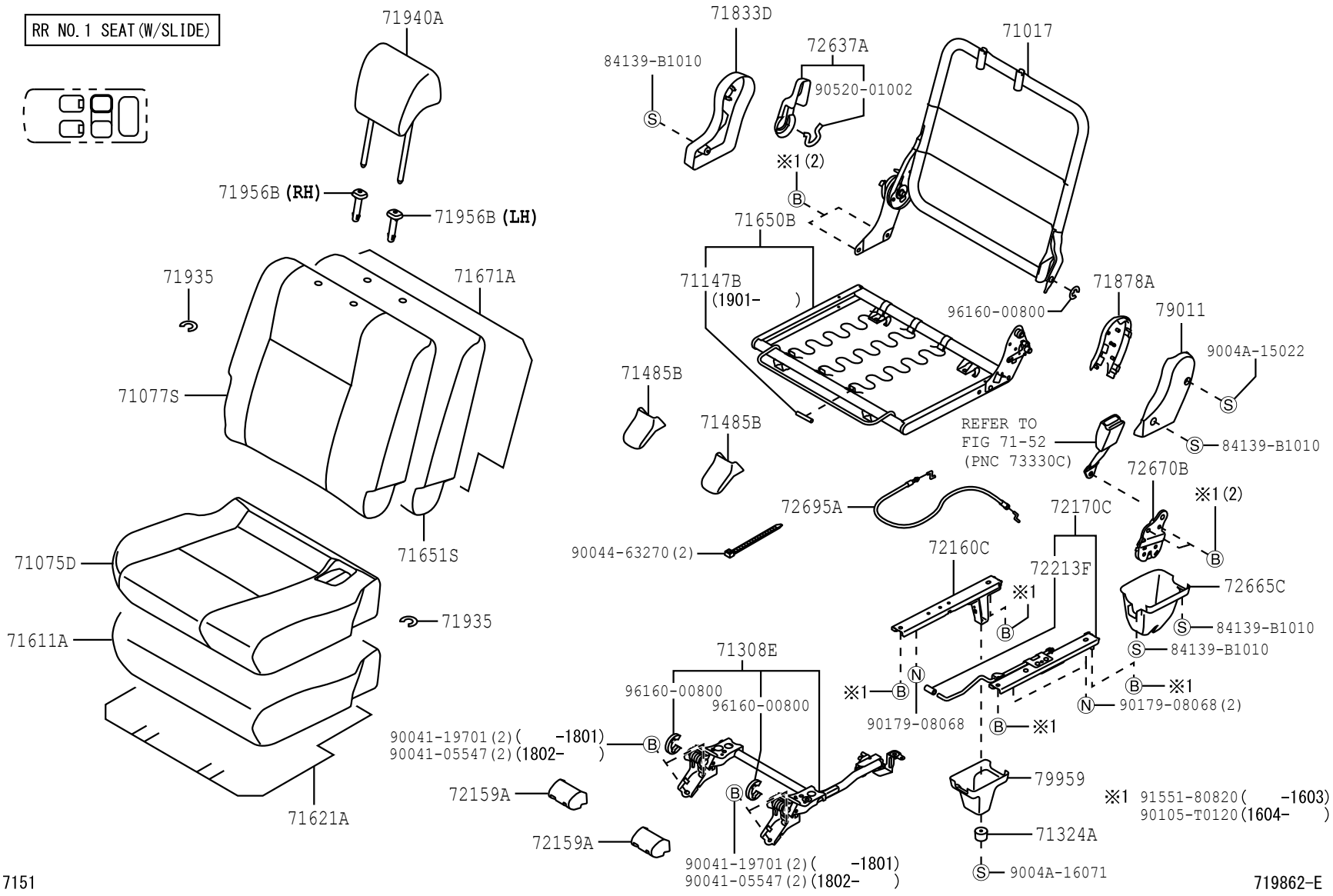

(1507-)

RR NO. 1 SEAT(LH) ILLUST NO. 2 OF 2

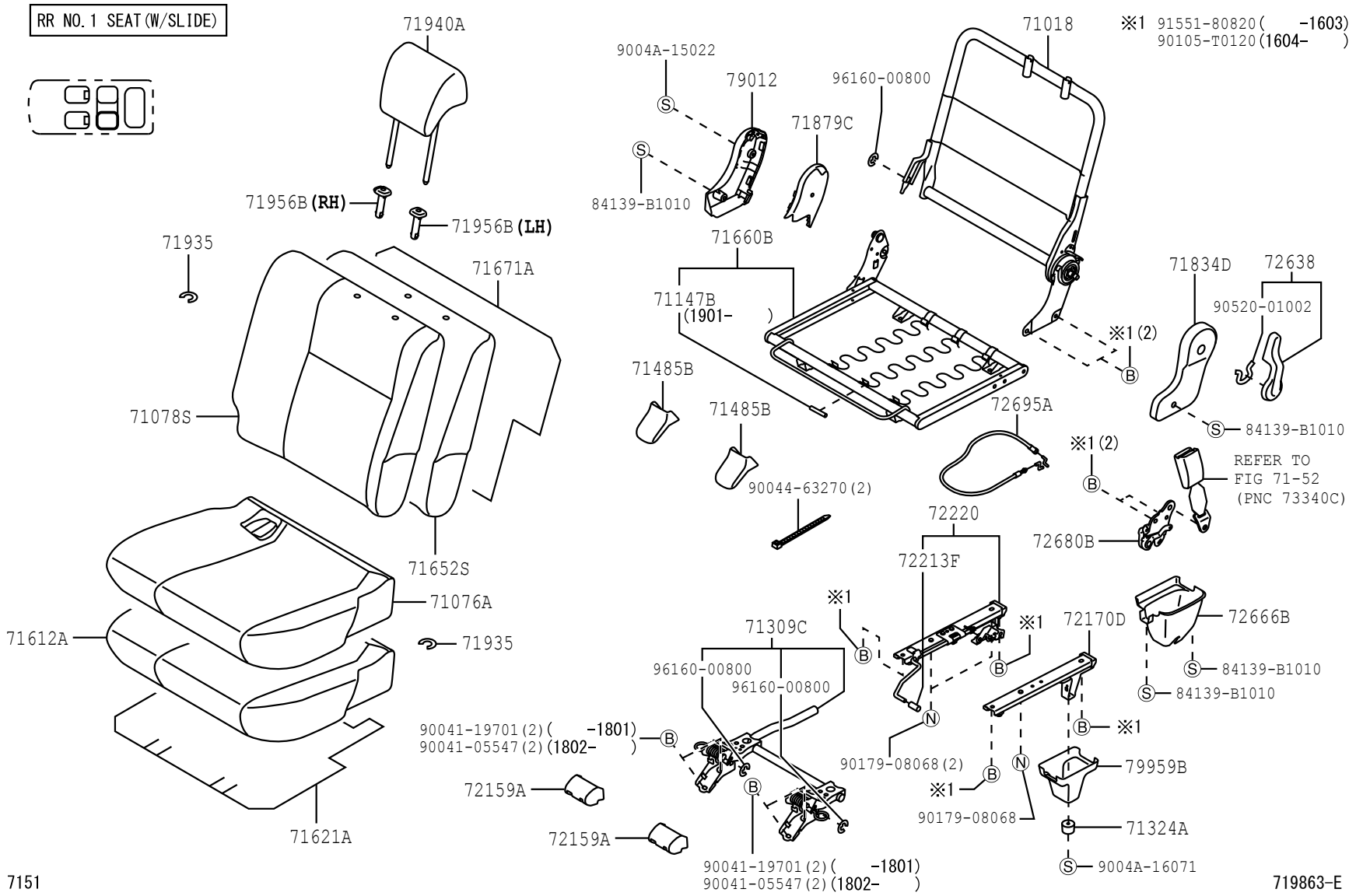

7151

719863-E

(1507-)F653, 654

RR NO. 2 SEAT(SEPARATE TYPE)

RR No. 2 SEAT(SEPARATE TYPE)

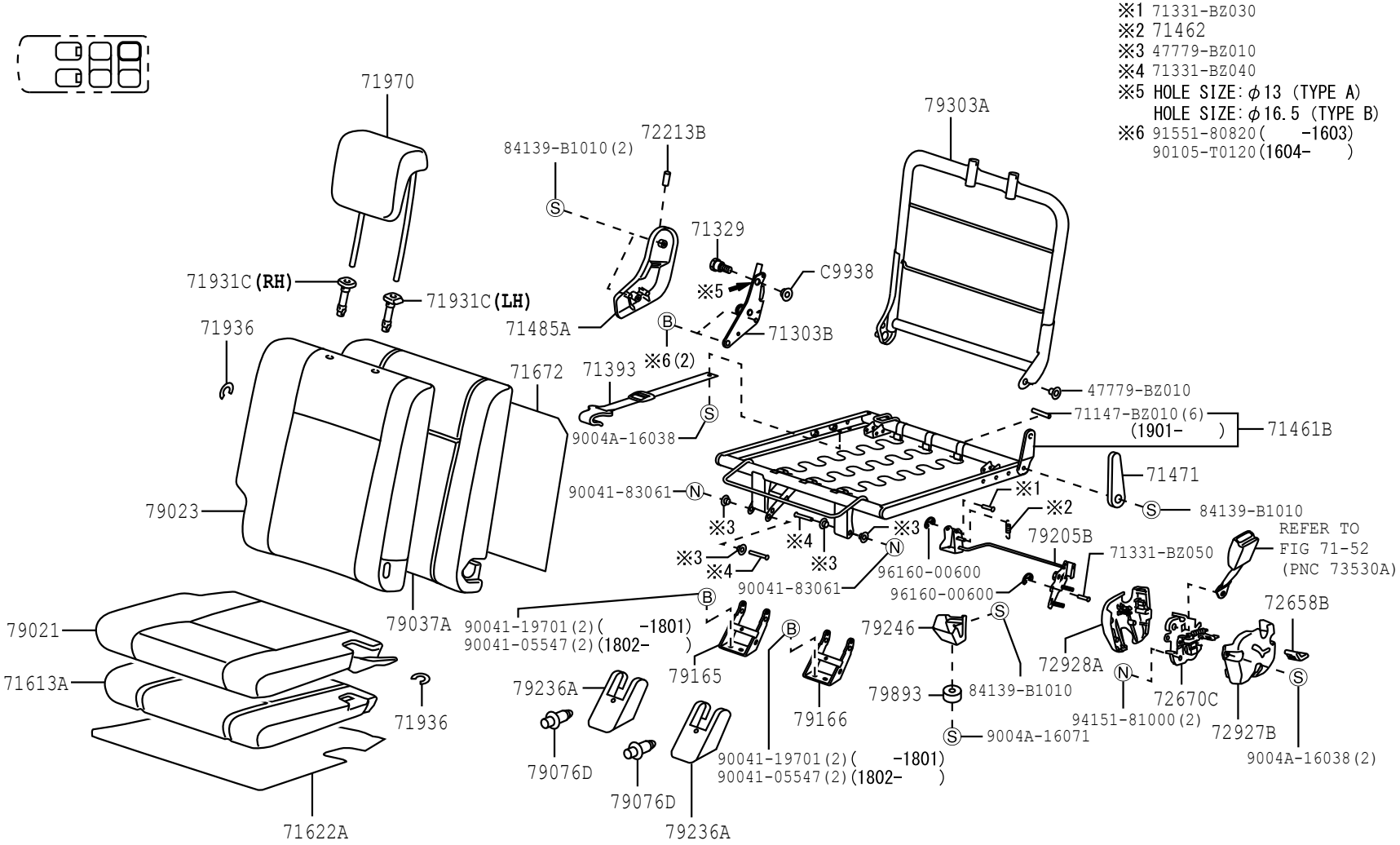

7151

719884-J

FIG. 71-51 SEAT & SEAT TRACK

(1507-)F653, 654

RR NO. 2 SEAT(SEPARATE TYPE)

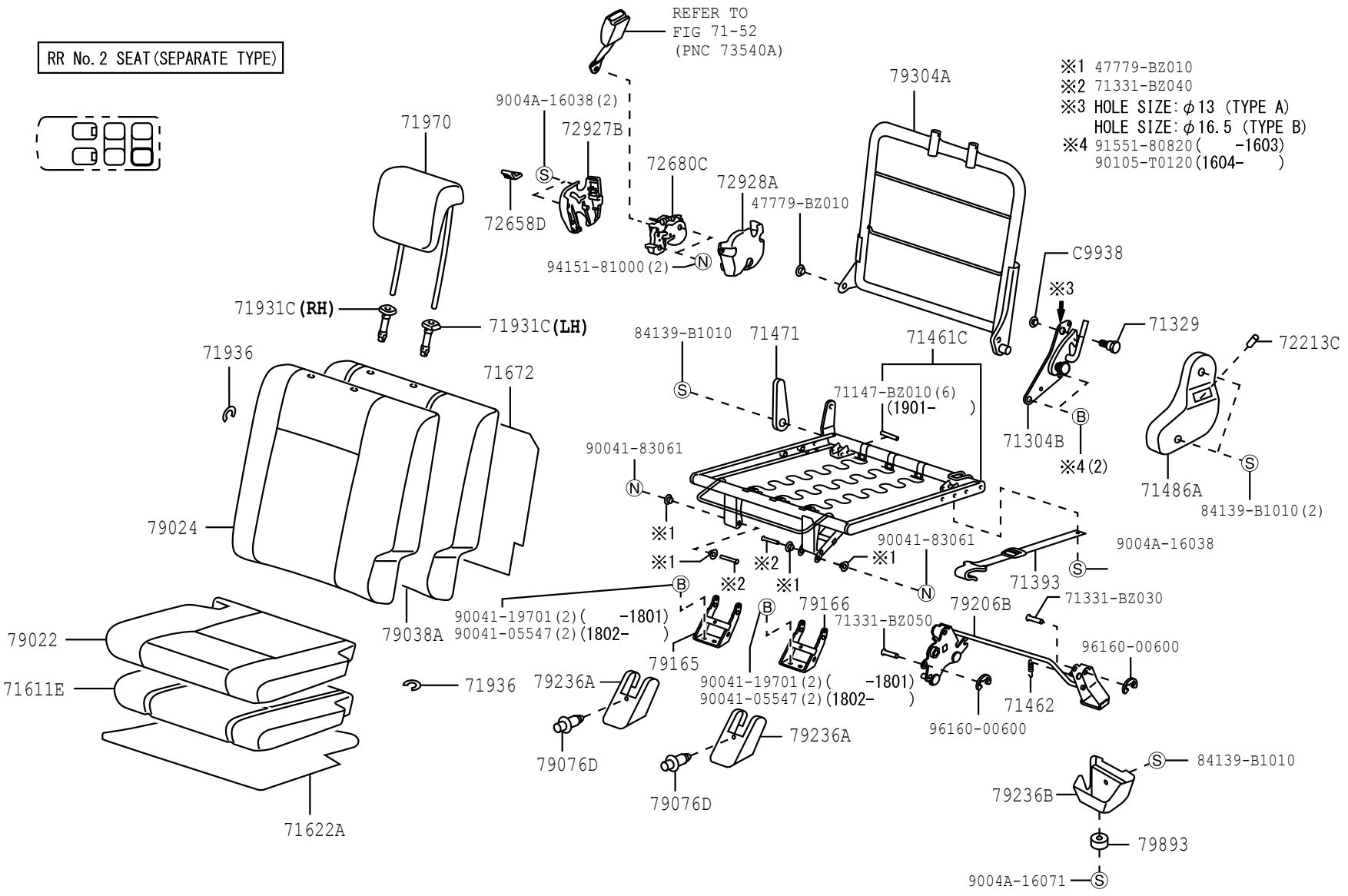

7151

719885-J

(1111-1312)F651 ; (1111-1312)F650..LO

RR NO. 2 SEAT

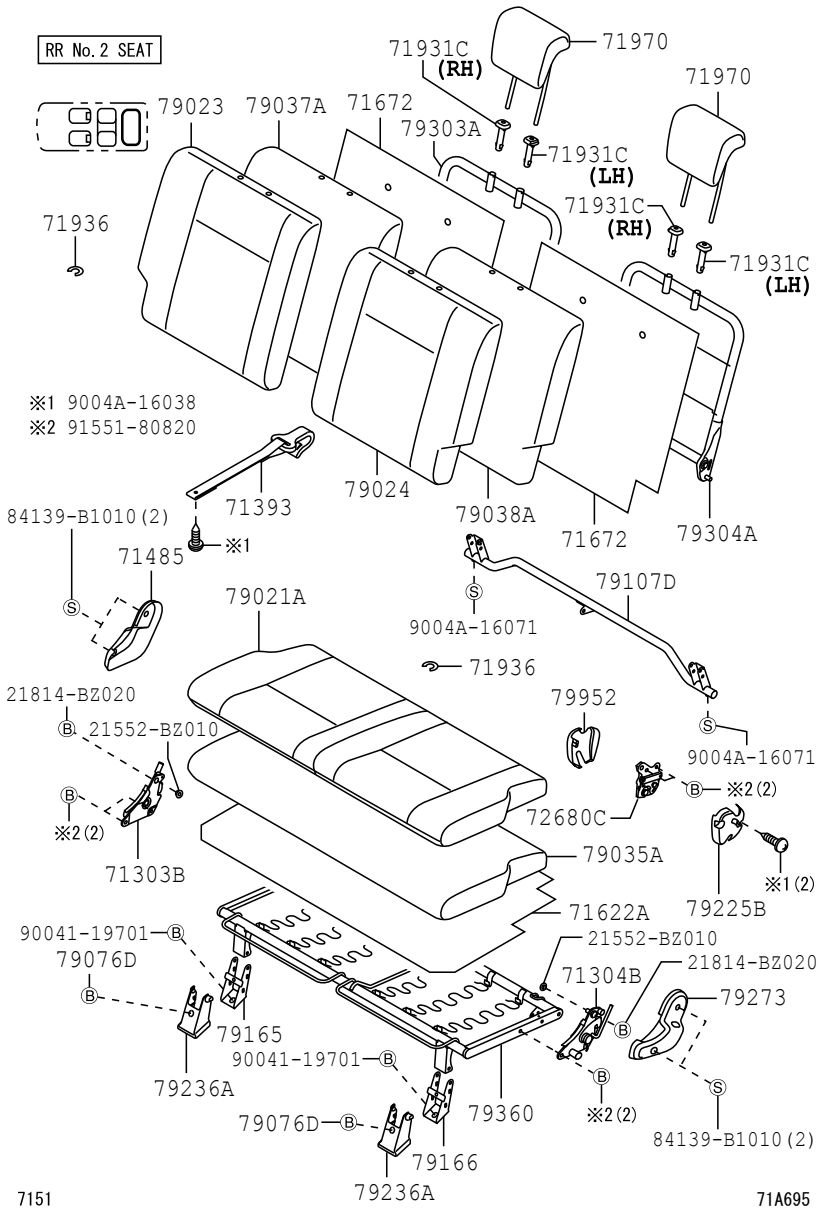

PROD_DATE	MODELS	SPEC CODE	DESCRIPTION	R/P	PART NUMBER	QYT	REV_REF FR	REV_REF TO
	71017	FRAME SUB-ASSY, REAR SEAT BACK, RH						
1111 - 1507	F65#				71017-BZ180-	1		
1507 - 1901	F65#				71017-BZ180-	1		
1901 -	F65#				71017-BZ180-	1		
	71018	FRAME SUB-ASSY, REAR SEAT BACK, LH						
1111 - 1507	F65#				71018-BZ130-	1		
1507 - 1901	F65#				71018-BZ130-	1		
1901 -	F65#				71018-BZ130-	1		
	71071S	COVER, FRONT SEAT CUSHION, RH(FOR SEPARATE TYPE)						
1111 - 1305	F650..STD		GRAY(TRIM1#)		71071-BZA00-B0	1		
1111 - 1305	F650..LO		BEIGE(TRIM4#)		71071-BZA00-E0	1		
1111 - 1305	F651..STD		BEIGE(TRIM4#)		71071-BZA00-E0	1		
1111 - 1305	F651..LO		BEIGE(TRIM4#)		71071-BZA40-E0	1		
1305 - 1507	F650..STD		GRAY(TRIM1#)		71071-BZA01-B0	1		
1305 - 1507	F650..LO		BEIGE(TRIM4#)		71071-BZA01-E2	1		
1305 - 1507	F651..STD		BEIGE(TRIM4#)		71071-BZA01-E2	1		
1305 - 1507	F651..LO		BEIGE(TRIM4#)		71071-BZA41-E1	1		
1507 - 1607	F650..STD		BROWN(TRIM1#)		71071-BZF90-E0	1		
1507 - 1901	F65#..LO		BROWN(TRIM4#)		71071-BZF90-E0	1		
1507 - 1901	F653..STD		BROWN(TRIM4#)		71071-BZG00-E1	1		
1901 -	F653..LO		-(TRIM4#)		71071-BZL20-B0	1		
1901 -	F65#..STD		-(TRIM4#)		71071-BZL30-B0	1		
	71072S	COVER, FRONT SEAT CUSHION, LH(FOR SEPARATE TYPE)						
1111 - 1305	F650..STD		GRAY(TRIM1#)		71072-BZ880-B0	1		
1111 - 1305	F650..LO		BEIGE(TRIM4#)		71072-BZ880-E0	1		

PROD_DATE	MODELS	SPEC CODE	DESCRIPTION	R/P	PART NUMBER	QYT	REV_REF FR	REV_REF TO
	+----------+							
	| 71072S | COVER, FRONT SEAT CUSHION, LH(FOR SEPARATE TYPE)							
	CONTINUED--+							
1111 - 1305	F651..STD		BEIGE(TRIM4#)		71072-BZ880-E0	1		
1111 - 1305	F651..LO		BEIGE(TRIM4#)		71072-BZA50-E0	1		
1305 - 1507	F650..STD		GRAY(TRIM1#)		71072-BZ881-B0	1		
1305 - 1507	F650..LO		BEIGE(TRIM4#)		71072-BZ881-E2	1		
1305 - 1507	F651..STD		BEIGE(TRIM4#)		71072-BZ881-E2	1		
1305 - 1507	F651..LO		BEIGE(TRIM4#)		71072-BZA51-E1	1		
1507 - 1607	F650..STD		BROWN(TRIM1#)		71072-BZG00-E0	1		
1507 - 1901	F65#..LO		BROWN(TRIM4#)		71072-BZG00-E0	1		
1507 - 1901	F653..STD		BROWN(TRIM4#)		71072-BZG10-E1	1		
1901 -	F653..LO		-(TRIM4#)		71072-BZL20-B0	1		
1901 -	F65#..STD		-(TRIM4#)		71072-BZL30-B0	1		
	+----------+							
	| 71073S | COVER, FRONT SEAT BACK, RH(FOR SEPARATE TYPE)							
	+----------+							
1111 - 1305	F650..STD		GRAY(TRIM1#)		71073-BZA40-B0	1		
1111 - 1305	F650..LO		BEIGE(TRIM4#)		71073-BZA40-E0	1		
1111 - 1305	F651..STD		BEIGE(TRIM4#)		71073-BZA40-E0	1		
1111 - 1305	F651..LO		BEIGE(TRIM4#)		71073-BZA90-E0	1		
1305 - 1507	F650..STD		GRAY(TRIM1#)		71073-BZA41-B0	1		
1305 - 1507	F650..LO		BEIGE(TRIM4#)		71073-BZA41-E2	1		
1305 - 1507	F651..STD		BEIGE(TRIM4#)		71073-BZA41-E2	1		
1305 - 1507	F651..LO		BEIGE(TRIM4#)		71073-BZA91-E1	1		
1507 - 1607	F650..STD		BROWN(TRIM1#)		71073-BZG80-E1	1		
1507 - 1901	F65#..LO		BROWN(TRIM4#)		71073-BZG80-E1	1		
1507 - 1901	F653..STD		BROWN(TRIM4#)		71073-BZG90-E1	1		
1901 -	F65#..STD		-(TRIM4#)		71073-BZM30-B0	1		
1901 -	F653..LO		-(TRIM4#)		71073-BZN30-B0	1		

FIG.71-51 SEAT & SEAT TRACK

PROD_DATE	MODELS	SPEC CODE	DESCRIPTION	R/P	PART NUMBER	QYT	REV_REF FR	REV_REF TO
	+----------+							
	| 71074S | COVER, FRONT SEAT BACK, LH(FOR SEPARATE TYPE)							
	+----------+							
1111 - 1305	F650..STD		GRAY(TRIM1#)		71074-BZ710-B0	1		
1111 - 1305	F650..LO		BEIGE(TRIM4#)		71074-BZ710-E0	1		
1111 - 1305	F651..STD		BEIGE(TRIM4#)		71074-BZ710-E0	1		
1111 - 1305	F651..LO		BEIGE(TRIM4#)		71074-BZ780-E0	1		
1305 - 1507	F650..STD		GRAY(TRIM1#)		71074-BZ711-B0	1		
1305 - 1507	F650..LO		BEIGE(TRIM4#)		71074-BZ711-E2	1		
1305 - 1507	F651..STD		BEIGE(TRIM4#)		71074-BZ711-E2	1		
1305 - 1507	F651..LO		BEIGE(TRIM4#)		71074-BZ781-E1	1		
1507 - 1607	F650..STD		BROWN(TRIM1#)		71074-BZD20-E1	1		
1507 - 1901	F65#..LO		BROWN(TRIM4#)		71074-BZD20-E1	1		
1507 - 1901	F653..STD		BROWN(TRIM4#)		71074-BZD30-E1	1		
1901 -	F653..LO		-(TRIM4#)		71074-BZG80-B0	1		
1901 -	F65#..STD		-(TRIM4#)		71074-BZG90-B0	1		
	+----------+							
	| 71075D | COVER SUB-ASSY, REAR SEAT CUSHION, RH							
	+----------+							
1111 - 1305	F650..STD		GRAY(TRIM1#)		71075-BZ810-B0	1		
1111 - 1305	F650..LO		BEIGE(TRIM4#)		71075-BZ860-E0	1		
1111 - 1305	F651..STD		BEIGE(TRIM4#)		71075-BZ860-E0	1		
1111 - 1305	F651..LO		BEIGE(TRIM4#)		71075-BZ870-E0	1		
1305 - 1507	F650..STD		GRAY(TRIM1#)		71075-BZ811-B0	1		
1305 - 1507	F650..LO		BEIGE(TRIM4#)		71075-BZ861-E2	1		
1305 - 1507	F651..STD		BEIGE(TRIM4#)		71075-BZ861-E2	1		
1305 - 1507	F651..LO		BEIGE(TRIM4#)		71075-BZ871-E1	1		
1507 - 1607	F650..STD		BROWN(TRIM1#)		71075-BZF10-E0	1		
1507 - 1607	F650..LO		BROWN(TRIM4#)		71075-BZF10-E0	1		
1507 - 1901	F653..LO		BROWN(TRIM4#)		71075-BZF30-E0	1		

PROD_DATE	MODELS	SPEC CODE	DESCRIPTION	R/P	PART NUMBER	QYT	REV_REF FR	REV_REF TO
	+----------+							
	| 71075D | COVER SUB-ASSY, REAR SEAT CUSHION, RH							
	CONTINUED--+							
1507 - 1901	F653..STD		BROWN(TRIM4#)		71075-BZF40-E0	1		
1901 -	F653..LO		-(TRIM4#)		71075-BZJ80-B0	1		
1901 -	F65#..STD		-(TRIM4#)		71075-BZJ90-B0	1		
	+----------+							
	| 71076A | COVER SUB-ASSY, REAR SEAT CUSHION, FRONT							
	+----------+ LH							
1111 - 1305	F650..STD		GRAY(TRIM1#)		71076-BZ620-B0	1		
1111 - 1305	F650..LO		BEIGE(TRIM4#)		71076-BZ670-E0	1		
1111 - 1305	F651..STD		BEIGE(TRIM4#)		71076-BZ670-E0	1		
1111 - 1305	F651..LO		BEIGE(TRIM4#)		71076-BZ680-E0	1		
1305 - 1507	F650..STD		GRAY(TRIM1#)		71076-BZ621-B0	1		
1305 - 1507	F650..LO		BEIGE(TRIM4#)		71076-BZ671-E2	1		
1305 - 1507	F651..STD		BEIGE(TRIM4#)		71076-BZ671-E2	1		
1305 - 1507	F651..LO		BEIGE(TRIM4#)		71076-BZ681-E1	1		
1507 - 1607	F650..STD		BROWN(TRIM1#)		71076-BZB90-E0	1		
1507 - 1607	F650..LO		BROWN(TRIM4#)		71076-BZB90-E0	1		
1507 - 1901	F653..LO		BROWN(TRIM4#)		71076-BZC10-E0	1		
1507 - 1901	F653..STD		BROWN(TRIM4#)		71076-BZC20-E0	1		
1901 -	F653..LO		-(TRIM4#)		71076-BZD70-B0	1		
1901 -	F65#..STD		-(TRIM4#)		71076-BZD80-B0	1		
	+----------+							
	| 71077S | COVER, REAR SEAT BACK, RH (FOR SEPARATE TYPE)							
	+----------+							
1111 - 1207	F650..STD		GRAY(TRIM1#)		71077-BZ680-B0	1		
1111 - 1207	F650..LO		BEIGE(TRIM4#)		71077-BZ680-E0	1		
1111 - 1207	F651..STD		BEIGE(TRIM4#)		71077-BZ680-E0	1		
1111 - 1207	F651..LO		BEIGE(TRIM4#)		71077-BZ730-E0	1		
1207 - 1305	F650..STD		GRAY(TRIM1#),DISUSE SEWING LINE		71077-BZ681-B0	1		

FIG.71-51 SEAT & SEAT TRACK

PROD_DATE	MODELS	SPEC CODE	DESCRIPTION	R/P	PART NUMBER	QYT	REV_REF FR	REV_REF TO
	+----------+							
	| 71077S | COVER, REAR SEAT BACK, RH (FOR SEPARATE TYPE)							
	CONTINUED--+							
1207 - 1305	F650..LO		BEIGE(TRIM4#),DISUSE SEWING LINE		71077-BZ681-E0	1		
1207 - 1305	F651..STD		BEIGE(TRIM4#),DISUSE SEWING LINE		71077-BZ681-E0	1		
1207 - 1305	F651..LO		BEIGE(TRIM4#)		71077-BZ731-E0	1		
1305 - 1507	F650..STD		GRAY(TRIM1#),DISUSE SEWING LINE		71077-BZ682-B0	1		
1305 - 1507	F650..LO		BEIGE(TRIM4#),DISUSE SEWING LINE		71077-BZ682-E2	1		
1305 - 1507	F651..STD		BEIGE(TRIM4#),DISUSE SEWING LINE		71077-BZ682-E2	1		
1305 - 1507	F651..LO		BEIGE(TRIM4#)		71077-BZ732-E1	1		
1507 - 1607	F650..STD		BROWN(TRIM1#)		71077-BZD70-E0	1		
1507 - 1901	F65#..LO		BROWN(TRIM4#)		71077-BZD70-E0	1		
1507 - 1901	F653..STD		BROWN(TRIM4#)		71077-BZD90-E0	1		
1901 -	F653..LO		-(TRIM4#)		71077-BZG90-B0	1		
1901 -	F65#..STD		-(TRIM4#)		71077-BZJ00-B0	1		
	+----------+							
	| 71078S | COVER, REAR SEAT BACK, LH(FOR SEPARATE TYPE)							
	+----------+							
1111 - 1207	F650..STD		GRAY(TRIM1#)		71078-BZ570-B0	1		
1111 - 1207	F650..LO		BEIGE(TRIM4#)		71078-BZ570-E0	1		
1111 - 1207	F651..STD		BEIGE(TRIM4#)		71078-BZ570-E0	1		
1111 - 1207	F651..LO		BEIGE(TRIM4#)		71078-BZ620-E0	1		
1207 - 1305	F650..STD		GRAY(TRIM1#),DISUSE SEWING LINE		71078-BZ571-B0	1		
1207 - 1305	F650..LO		BEIGE(TRIM4#),DISUSE SEWING LINE		71078-BZ571-E0	1		
1207 - 1305	F651..STD		BEIGE(TRIM4#),DISUSE SEWING LINE		71078-BZ571-E0	1		
1207 - 1305	F651..LO		BEIGE(TRIM4#)		71078-BZ621-E0	1		

PROD_DATE	MODELS	SPEC CODE	DESCRIPTION	R/P	PART NUMBER	QYT	REV_REF FR	REV_REF TO
	+----------+							
	| 71078S | COVER, REAR SEAT BACK, LH(FOR SEPARATE TYPE)							
	CONTINUED--+							
1305 - 1507	F650..STD		GRAY(TRIM1#),DISUSE SEWING LINE		71078-BZ572-B0	1		
1305 - 1507	F650..LO		BEIGE(TRIM4#),DISUSE SEWING LINE		71078-BZ572-E2	1		
1305 - 1507	F651..STD		BEIGE(TRIM4#),DISUSE SEWING LINE		71078-BZ572-E2	1		
1305 - 1507	F651..LO		BEIGE(TRIM4#)		71078-BZ622-E1	1		
1507 - 1607	F650..STD		BROWN(TRIM1#)		71078-BZB50-E0	1		
1507 - 1901	F65#..LO		BROWN(TRIM4#)		71078-BZB50-E0	1		
1507 - 1901	F653..STD		BROWN(TRIM4#)		71078-BZB70-E0	1		
1901 -	F653..LO		-(TRIM4#)		71078-BZD30-B0	1		
1901 -	F65#..STD		-(TRIM4#)		71078-BZD40-B0	1		
	+----------+							
	| 71110A | FRAME ASSY, FRONT SEAT W/ADJUSTER, RH							
	+----------+							
1111 - 1305	F65#				71110-BZ130-	1		
1305 - 1507	F65#				71110-BZ131-	1		
1507 - 1901	F65#				71110-BZ131-	1		
1901 -	F65#				71110-BZ131-	1		
	+----------+							
	| 71120B | FRAME ASSY, FRONT SEAT W/ADJUSTER, LH							
	+----------+							
1111 - 1305	F65#				71120-BZ100-	1		
1305 - 1507	F65#				71120-BZ101-	1		
1507 - 1901	F65#				71120-BZ101-	1		
1901 -	F65#				71120-BZ101-	1		
	+----------+							
	| 71121 | BRACKET, FRONT SEAT CUSHION, RH							
	+----------+							
1305 - 1507	F65#				71121-BZ020-	1		
1507 - 1901	F65#				71121-BZ020-	1		
1901 -	F65#				71121-BZ020-	1		

FIG.71-51 SEAT & SEAT TRACK

PROD_DATE	MODELS	SPEC CODE	DESCRIPTION	R/P	PART NUMBER	QYT	REV_REF FR	REV_REF TO
	+----------+							
	| 71122 | BRACKET, FRONT SEAT CUSHION, LH							
	+----------+							
1305 - 1507	F65#				71122-BZ020-	1		
1507 - 1901	F65#				71122-BZ020-	1		
1901 -	F65#				71122-BZ020-	1		
	+----------+							
	| 71127A | PLATE, FRONT SEAT CUSHION COVER SET							
	+----------+							
1209 - 1507	F65#				71127-BZ010-	4		
1507 - 1901	F65#				71127-BZ010-	4		
1901 -	F65#				71127-BZ010-	4		
	+----------+							
	| 71139A | COVER, FRONT SEAT LEG, NO.1							
	+----------+							
1305 - 1507	F650..STD		DK.GRAY(TRIM1#)		71139-BZ060-B0	1		
1305 - 1507	F651		DK.GRAY(TRIM4#)		71139-BZ060-B0	1		
1305 - 1507	F650..LO		DK.GRAY(TRIM4#)		71139-BZ060-B0	1		
1507 - 1607	F650..STD		DK.GRAY(TRIM1#)		71139-BZ060-B0	1		
1507 - 1901	F653		DK.GRAY(TRIM4#)		71139-BZ060-B0	1		
1507 - 1901	F650..LO		DK.GRAY(TRIM4#)		71139-BZ060-B0	1		
1901 -	F65#		DK.GRAY(TRIM4#)		71139-BZ060-B0	1		
	+----------+							
	| 71139D | COVER, FRONT SEAT LEG NO.1							
	+----------+							
1305 - 1507	F650..STD		DK.GRAY(TRIM1#)		71139-BZ080-B0	1		
1305 - 1507	F651		DK.GRAY(TRIM4#)		71139-BZ080-B0	1		
1305 - 1507	F650..LO		DK.GRAY(TRIM4#)		71139-BZ080-B0	1		
1507 - 1607	F650..STD		DK.GRAY(TRIM1#)		71139-BZ080-B0	1		
1507 - 1901	F653		DK.GRAY(TRIM4#)		71139-BZ080-B0	1		
1507 - 1901	F650..LO		DK.GRAY(TRIM4#)		71139-BZ080-B0	1		
1901 -	F65#		DK.GRAY(TRIM4#)		71139-BZ080-B0	1		

PROD_DATE	MODELS	SPEC CODE	DESCRIPTION	R/P	PART NUMBER	QYT	REV_REF FR	REV_REF TO
	+----------+							
	| 71139E | COVER, FRONT SEAT LEG NO.2							
	+----------+							
1305 - 1507	F650..STD		DK.GRAY(TRIM1#)		71139-BZ080-B0	1		
1305 - 1507	F651		DK.GRAY(TRIM4#)		71139-BZ080-B0	1		
1305 - 1507	F650..LO		DK.GRAY(TRIM4#)		71139-BZ080-B0	1		
1507 - 1607	F650..STD		DK.GRAY(TRIM1#)		71139-BZ080-B0	1		
1507 - 1901	F653		DK.GRAY(TRIM4#)		71139-BZ080-B0	1		
1507 - 1901	F650..LO		DK.GRAY(TRIM4#)		71139-BZ080-B0	1		
1901 -	F65#		DK.GRAY(TRIM4#)		71139-BZ080-B0	1		
	+----------+							
	| 71147 | SILENCER, SEAT SPRING							
	+----------+							
1901 -	F65#				71147-BZ010-	16		
	+----------+							
	| 71147B | SILENCER, SEAT SPRING							
	+----------+							
1901 -	F65#				71147-BZ010-	12		
	+----------+							
	| 71149A | COVER, FRONT SEAT LEG, LH							
	+----------+							
1305 - 1507	F650..STD		DK.GRAY(TRIM1#)		71149-BZ140-B0	1		
1305 - 1507	F651		DK.GRAY(TRIM4#)		71149-BZ140-B0	1		
1305 - 1507	F650..LO		DK.GRAY(TRIM4#)		71149-BZ140-B0	1		
1507 - 1607	F650..STD		DK.GRAY(TRIM1#)		71149-BZ140-B0	1		
1507 - 1901	F653		DK.GRAY(TRIM4#)		71149-BZ140-B0	1		
1507 - 1901	F650..LO		DK.GRAY(TRIM4#)		71149-BZ140-B0	1		
1901 -	F65#		DK.GRAY(TRIM4#)		71149-BZ140-B0	1		
	+----------+							
	| 71303B | HINGE SUB-ASSY, REAR NO.2 SEAT, RH							
	+----------+							
1111 - 1507	F65#				71303-BZ050-	1		
1507 - 1607	F650				71303-BZ070-	1		
1507 - 1712	F653		TYPE A(HOLE:13)		71303-BZ070-	1		
1712 - 1901	F653		TYPE B(HOLE:16.5)		71303-BZ120-	1		

FIG.71-51 SEAT & SEAT TRACK

PROD_DATE	MODELS	SPEC CODE	DESCRIPTION	R/P	PART NUMBER	QYT	REV_REF FR	REV_REF TO
	+----------+							
	| 71303B | HINGE SUB-ASSY, REAR NO.2 SEAT, RH							
	CONTINUED--+							
1901 -	F65#		TYPE B(HOLE:16.5)		71303-BZ120-	1		
	+----------+							
	| 71304B | HINGE SUB-ASSY, REAR NO.2 SEAT, LH							
	+----------+							
1111 - 1507	F65#				71304-BZ040-	1		
1507 - 1607	F650				71304-BZ060-	1		
1507 - 1712	F653		TYPE A(HOLE:13)		71304-BZ060-	1		
1712 - 1901	F653		TYPE B(HOLE:16.5)		71304-BZ070-	1		
1901 -	F65#		TYPE B(HOLE:16.5)		71304-BZ070-	1		
	+----------+							
	| 71308E | LEG SUB-ASSY, REAR SEAT, RH							
	+----------+							
1111 - 1507	F651				71308-BZ110-	1		
1111 - 1507	F650..LO				71308-BZ110-	1		
1507 - 1901	F653				71308-BZ110-	1		
1901 -	F65#				71308-BZ110-	1		
	+----------+							
	| 71309C | LEG SUB-ASSY, REAR SEAT, REAR LH							
	+----------+							
1111 - 1507	F651				71309-BZ110-	1		
1111 - 1507	F650..LO				71309-BZ110-	1		
1507 - 1901	F653				71309-BZ110-	1		
1901 -	F65#				71309-BZ110-	1		
	+----------+							
	| 71324A | CUSHION, REAR SEAT							
	+----------+							
1111 - 1507	F651				72179-BZ030-	2		
1111 - 1507	F650..LO				72179-BZ030-	2		
1507 - 1901	F653				72179-BZ030-	2		
1901 -	F65#				72179-BZ030-	2		

PROD_DATE	MODELS	SPEC CODE	DESCRIPTION	R/P	PART NUMBER	QYT	REV_REF FR	REV_REF TO
	71329 BOLT, REAR SEAT HINGE							
1507 - 1712	F653		TYPE A(HOLE:13)		21814-BZ021-	2		
1712 - 1901	F653		TYPE B(HOLE:16.5)		21814-BZ030-	2		
1901 -	F65#		TYPE B(HOLE:16.5)		21814-BZ030-	2		
	71393 BAND, REAR SEAT CUSHION							
1111 - 1507	F650..STD		DK.GRAY(TRIM1#)		78980-BZ070-B0	1		
1111 - 1507	F651		DK.GRAY(TRIM4#)		78980-BZ070-B0	1		
1111 - 1507	F650..LO		DK.GRAY(TRIM4#)		78980-BZ070-B0	1		
1507 - 1607	F650..STD		DK.GRAY(TRIM1#)		78980-BZ070-B0	1		
1507 - 1607	F650..LO		DK.GRAY(TRIM4#)		78980-BZ070-B0	1		
1507 - 1901	F653		DK.GRAY(TRIM4#)		78980-BZ070-B0	2		
1901 -	F65#		DK.GRAY(TRIM4#)		78980-BZ070-B0	2		
	71430C CLIP							
1111 - 1305	F65#		-		90044-68185-C0	4		
1305 - 1507	F65#		-		90044-68185-C0	6		
1507 - 1901	F65#		-		90044-68185-C0	6		
1901 -	F65#		-		90044-68185-C0	6		
	71439A CLIP							
1111 - 1305	F65#				9004A-46143-	18		
1305 - 1507	F65#				9004A-46143-	52		
1507 - 1901	F65#				9004A-46143-	52		
1901 -	F65#				9004A-46143-	52		
	71461B SPRING, REAR SEAT CUSHION, RH							
1507 - 1901	F653				79360-BZ050-	1		
1901 -	F65#				79360-BZ050-	1		

FIG.71-51 SEAT & SEAT TRACK

PROD_DATE	MODELS	SPEC CODE	DESCRIPTION	R/P	PART NUMBER	QYT	REV_REF FR	REV_REF TO
	71461C SPRING, REAR SEAT CUSHION, LH							
1507 - 1901	F653				79370-BZ010-	1		
1901 -	F65#				79370-BZ010-	1		
	71462 SPRING, REAR SEAT CUSHION, NO.2							
1312 - 1507	F65#				71462-BZ070-	2		
1507 - 1901	F65#				71462-BZ070-	2		
1901 -	F65#				71462-BZ070-	2		
	71471 COVER, REAR SEAT HINGE							
1507 - 1901	F653		DK.GRAY(TRIM4#)		71485-BZ110-B0	2		
1901 -	F65#		DK.GRAY(TRIM4#)		71485-BZ110-B0	2		
	71485 COVER, REAR SEAT HINGE							
1111 - 1507	F650..STD		DK.GRAY(TRIM1#)		71485-BZ060-B0	1		
1111 - 1507	F651		DK.GRAY(TRIM4#)		71485-BZ060-B0	1		
1111 - 1507	F650..LO		DK.GRAY(TRIM4#)		71485-BZ060-B0	1		
	71485A COVER, REAR SEAT HINGE, NO.2 RH							
1507 - 1607	F650..STD		DK.GRAY(TRIM1#)		71485-BZ062-B0	1		
1507 - 1901	F653		DK.GRAY(TRIM4#)		71485-BZ062-B0	1		
1507 - 1901	F650..LO		DK.GRAY(TRIM4#)		71485-BZ062-B0	1		
1901 -	F65#		DK.GRAY(TRIM4#)		71485-BZ062-B0	1		
	71485B COVER, REAR SEAT HINGE							
1111 - 1507	F650..STD		DK.GRAY(TRIM1#)		71485-BZ040-B0	4		
1111 - 1507	F651		DK.GRAY(TRIM4#)		71485-BZ040-B0	4		
1111 - 1507	F650..LO		DK.GRAY(TRIM4#)		71485-BZ040-B0	4		
1507 - 1607	F650..STD		DK.GRAY(TRIM1#)		71485-BZ040-B0	4		

PROD_DATE	MODELS	SPEC CODE	DESCRIPTION	R/P	PART NUMBER	QYT	REV_REF FR	REV_REF TO
	+----------+							
	| 71485B | COVER, REAR SEAT HINGE							
	CONTINUED--+							
1507 - 1901	F653		DK.GRAY(TRIM4#)		71485-BZ040-B0	4		
1507 - 1901	F650..LO		DK.GRAY(TRIM4#)		71485-BZ040-B0	4		
1901 -	F65#		DK.GRAY(TRIM4#)		71485-BZ040-B0	4		
	+----------+							
	| 71486A | COVER, REAR SEAT HINGE, NO.2 LH							
	+----------+							
1507 - 1607	F650..STD		DK.GRAY(TRIM1#)		79273-BZ042-B0	1		
1507 - 1901	F653		DK.GRAY(TRIM4#)		79273-BZ042-B0	1		
1507 - 1901	F650..LO		DK.GRAY(TRIM4#)		79273-BZ042-B0	1		
1901 -	F65#		DK.GRAY(TRIM4#)		79273-BZ042-B0	1		
	+----------+							
	| 71511S | PAD, FRONT SEAT CUSHION, RH(FOR SEPARATE TYPE)							
	+----------+							
1111 - 1305	F65#				71501-BZ390-	1		
1305 - 1507	F65#				71501-BZ391-	1		
1507 - 1901	F65#				71501-BZ391-	1		
1901 -	F65#				71501-BZ391-	1		
	+----------+							
	| 71512S | PAD, FRONT SEAT CUSHION, LH (FOR SEPARATE TYPE)							
	+----------+							
1111 - 1305	F65#				71501-BZ390-	1		
1305 - 1507	F65#				71501-BZ391-	1		
1507 - 1901	F65#				71501-BZ391-	1		
1901 -	F65#				71501-BZ391-	1		
	+----------+							
	| 71521A | PAD,FRONT SEAT CUSHION SILENCER							
	+----------+							
1111 - 1507	F65#				71147-B1020-	2		
1507 - 1901	F65#				71147-B1020-	2		
1901 -	F65#				71147-B1020-	2		

FIG.71-51 SEAT & SEAT TRACK

PROD_DATE	MODELS	SPEC CODE	DESCRIPTION	R/P	PART NUMBER	QYT	REV_REF FR	REV_REF TO
	+----------+							
	| 71537C | PROTECTOR, FRONT SEAT CUSHION EDGE, RH							
	+----------+							
1111 - 1507	F65#				71537-BZ030-	4		
1507 - 1901	F65#				71537-BZ030-	4		
1901 -	F65#				71537-BZ030-	4		
	+----------+							
	| 71537D | PROTECTOR, FRONT SEAT CUSHION EDGE, LH							
	+----------+							
1111 - 1507	F65#				71537-BZ030-	4		
1507 - 1901	F65#				71537-BZ030-	4		
1901 -	F65#				71537-BZ030-	4		
	+----------+							
	| 71551S | PAD, FRONT SEAT BACK, RH(FOR SEPARATE TYP							
	+----------+ E)							
1111 - 1305	F65#				71505-BZ280-	1		
1305 - 1507	F65#				71505-BZ281-	1		
1507 - 1901	F65#				71505-BZ281-	1		
1901 -	F65#				71505-BZ281-	1		
	+----------+							
	| 71552S | PAD, FRONT SEAT BACK, LH(FOR SEPARATE TYP							
	+----------+ E)							
1111 - 1305	F65#				71506-BZ210-	1		
1305 - 1507	F65#				71506-BZ211-	1		
1507 - 1901	F65#				71506-BZ211-	1		
1901 -	F65#				71506-BZ211-	1		
	+----------+							
	| 71571 | PAD, FRONT SEAT BACK SILENCER, A							
	+----------+							
1111 - 1507	F65#				71147-B2030-	2		
1507 - 1901	F65#				71147-B2030-	2		
1901 -	F65#				71147-B2030-	2		
	+----------+							
	| 71611A | PAD, REAR SEAT CUSHION, RH							
	+----------+							
1111 - 1305	F65#				71503-BZ270-	1		

PROD_DATE	MODELS	SPEC CODE	DESCRIPTION	R/P	PART NUMBER	QYT	REV_REF FR	REV_REF TO
	+----------+							
	| 71611A | PAD, REAR SEAT CUSHION, RH							
	CONTINUED--+							
1305 - 1507	F65#				71503-BZ271-	1		
1507 - 1901	F65#				71503-BZ271-	1		
1901 -	F65#				71503-BZ271-	1		
	+----------+							
	| 71611E | PAD, REAR NO.2 SEAT CUSHION, A							
	+----------+							
1507 - 1901	F653				79036-BZ010-	1		
1901 -	F65#				79036-BZ010-	1		
	+----------+							
	| 71612A | PAD, REAR SEAT CUSHION, LH							
	+----------+							
1111 - 1305	F65#				71504-BZ220-	1		
1305 - 1507	F65#				71504-BZ221-	1		
1507 - 1901	F65#				71504-BZ221-	1		
1901 -	F65#				71504-BZ221-	1		
	+----------+							
	| 71613A | PAD, REAR NO.2 SEAT CUSHION							
	+----------+							
1507 - 1901	F653				79035-BZ230-	1		
1901 -	F65#				79035-BZ230-	1		
	+----------+							
	| 71621A | PAD, REAR SEAT CUSHION SILENCER, A							
	+----------+							
1111 - 1507	F65#				71621-BZ040-	2		
1507 - 1901	F65#				71621-BZ040-	2		
1901 -	F65#				71621-BZ040-	2		
	+----------+							
	| 71622A | PAD, REAR SEAT CUSHION SILENCER, B							
	+----------+							
1111 - 1507	F65#				71622-BZ070-	1		
1507 - 1607	F650				71622-BZ070-	1		
1507 - 1901	F653				71622-BZ080-	2		
1901 -	F65#				71622-BZ080-	2		

FIG.71-51 SEAT & SEAT TRACK

PROD_DATE	MODELS	SPEC CODE	DESCRIPTION	R/P	PART NUMBER	QYT	REV_REF FR	REV_REF TO
	+----------+							
	| 71650B | SPRING ASSY, REAR SEAT CUSHION, RH							
	+----------+							
1111 - 1507	F650..STD				71650-BZ010-	1		
1111 - 1507	F651				71650-BZ020-	1		
1111 - 1507	F650..LO				71650-BZ020-	1		
1507 - 1607	F650				71650-BZ120-	1		
1507 - 1901	F653				71650-BZ130-	1		
1901 -	F65#				71650-BZ130-	1		
	+----------+							
	| 71651S | PAD, REAR SEAT BACK, RH(FOR SEPARATE TYPE							
	+----------+)							
1111 - 1305	F65#				71507-BZ220-	1		
1305 - 1507	F65#				71507-BZ221-	1		
1507 - 1901	F65#				71507-BZ221-	1		
1901 -	F65#				71507-BZ221-	1		
	+----------+							
	| 71652S | PAD, REAR SEAT BACK, LH(FOR SEPARATE TYPE							
	+----------+)							
1111 - 1305	F65#				71508-BZ180-	1		
1305 - 1507	F65#				71508-BZ181-	1		
1507 - 1901	F65#				71508-BZ181-	1		
1901 -	F65#				71508-BZ181-	1		
	+----------+							
	| 71660B | SPRING ASSY, REAR SEAT CUSHION, LH							
	+----------+							
1111 - 1507	F650..STD				71660-BZ010-	1		
1111 - 1507	F651				71660-BZ020-	1		
1111 - 1507	F650..LO				71660-BZ020-	1		
1507 - 1607	F650				71660-BZ120-	1		
1507 - 1901	F653				71660-BZ130-	1		
1901 -	F65#				71660-BZ130-	1		

PROD_DATE	MODELS	SPEC CODE	DESCRIPTION	R/P	PART NUMBER	QYT	REV_REF FR	REV_REF TO
	71671A PAD, REAR SEAT BACK SILENCER, A							
1111 - 1207	F650..LO				71671-BZ040-	1		
1111 - 1207	F651..STD				71671-BZ040-	1		
1111 - 1507	F651..LO				71671-BZ040-	2		
1111 - 1507	F650..STD				71671-BZ040-	2		
1207 - 1507	F650..LO				71671-BZ040-	2		
1207 - 1507	F651..STD				71671-BZ040-	2		
1507 - 1901	F65#				71671-BZ040-	2		
1901 -	F65#				71671-BZ040-	2		
	71672 PAD, REAR SEAT BACK SILENCER, B							
1111 - 1507	F65#				71672-BZ080-	2		
1507 - 1901	F65#				71672-BZ080-	2		
1901 -	F65#				71672-BZ080-	2		
	71811D SHIELD, FRONT SEAT CUSHION, RH							
1111 - 1305	F650..STD		DK.GRAY(TRIM1#)		71811-BZ110-B0	1		
1111 - 1305	F651		-(TRIM4#)		71811-BZ110-E0	1		
1111 - 1305	F650..LO		-(TRIM4#)		71811-BZ110-E0	1		
1305 - 1507	F650..STD		DK.GRAY(TRIM1#)		71811-BZ210-B0	1		
1305 - 1507	F651		BEIGE(TRIM4#)		71811-BZ210-E0	1		
1305 - 1507	F650..LO		BEIGE(TRIM4#)		71811-BZ210-E0	1		
1507 - 1607	F650..STD		DK.GRAY(TRIM1#)		71811-BZ210-B0	1		
1507 - 1901	F653		DK.GRAY(TRIM4#)		71811-BZ210-B0	1		
1507 - 1901	F650..LO		DK.GRAY(TRIM4#)		71811-BZ210-B0	1		
1901 -	F65#		DK.GRAY(TRIM4#)		71811-BZ210-B0	1		

FIG.71-51 SEAT & SEAT TRACK

PROD_DATE	MODELS	SPEC CODE	DESCRIPTION	R/P	PART NUMBER	QYT	REV_REF FR	REV_REF TO
	71812D SHIELD, FRONT SEAT CUSHION, LH							
1111 - 1305	F650..STD		DK.GRAY(TRIM1#)		71812-BZ090-B0	1		
1111 - 1305	F651		-(TRIM4#)		71812-BZ090-E0	1		
1111 - 1305	F650..LO		-(TRIM4#)		71812-BZ090-E0	1		
1305 - 1507	F650..STD		DK.GRAY(TRIM1#)		71812-BZ170-B0	1		
1305 - 1507	F651		BEIGE(TRIM4#)		71812-BZ170-E0	1		
1305 - 1507	F650..LO		BEIGE(TRIM4#)		71812-BZ170-E0	1		
1507 - 1607	F650..STD		DK.GRAY(TRIM1#)		71812-BZ170-B0	1		
1507 - 1901	F653		DK.GRAY(TRIM4#)		71812-BZ170-B0	1		
1507 - 1901	F650..LO		DK.GRAY(TRIM4#)		71812-BZ170-B0	1		
1901 -	F65#		DK.GRAY(TRIM4#)		71812-BZ170-B0	1		
	71831D COVER, FRONT SEAT HINGE, RH							
1111 - 1507	F650..STD		DK.GRAY(TRIM1#)		71831-BZ040-B0	1		
1111 - 1507	F651		-(TRIM4#)		71831-BZ040-E0	1		
1111 - 1507	F650..LO		-(TRIM4#)		71831-BZ040-E0	1		
1507 - 1607	F650..STD		DK.GRAY(TRIM1#)		71831-BZ040-B0	1		
1507 - 1901	F653		DK.GRAY(TRIM4#)		71831-BZ040-B0	1		
1507 - 1901	F650..LO		DK.GRAY(TRIM4#)		71831-BZ040-B0	1		
1901 -	F65#		DK.GRAY(TRIM4#)		71831-BZ040-B0	1		
	71832D COVER, FRONT SEAT HINGE, LH							
1111 - 1507	F650..STD		DK.GRAY(TRIM1#)		71832-BZ090-B0	1		
1111 - 1507	F651		-(TRIM4#)		71832-BZ090-E0	1		
1111 - 1507	F650..LO		-(TRIM4#)		71832-BZ090-E0	1		
1507 - 1607	F650..STD		DK.GRAY(TRIM1#)		71832-BZ090-B0	1		
1507 - 1901	F653		DK.GRAY(TRIM4#)		71832-BZ090-B0	1		
1507 - 1901	F650..LO		DK.GRAY(TRIM4#)		71832-BZ090-B0	1		

PROD_DATE	MODELS	SPEC CODE	DESCRIPTION	R/P	PART NUMBER	QYT	REV_REF FR	REV_REF TO
	+----------+							
	| 71832D | COVER, FRONT SEAT HINGE, LH							
	CONTINUED--+							
1901 -	F65#		DK.GRAY(TRIM4#)		71832-BZ090-B0	1		
	+----------+							
	| 71833D | COVER REAR SEAT RECLINING, RH							
	+----------+							
1111 - 1507	F650..STD		DK.GRAY(TRIM1#)		71833-BZ050-B0	1		
1111 - 1507	F651		-(TRIM4#)		71833-BZ050-E0	1		
1111 - 1507	F650..LO		-(TRIM4#)		71833-BZ050-E0	1		
1507 - 1607	F650..STD		DK.GRAY(TRIM1#)		71833-BZ050-B0	1		
1507 - 1901	F653		DK.GRAY(TRIM4#)		71833-BZ050-B0	1		
1507 - 1901	F650..LO		DK.GRAY(TRIM4#)		71833-BZ050-B0	1		
1901 -	F65#		DK.GRAY(TRIM4#)		71833-BZ050-B0	1		
	+----------+							
	| 71834D | COVER, REAR SEAT RECLINING, LH							
	+----------+							
1111 - 1507	F650..STD		DK.GRAY(TRIM1#)		71834-BZ060-B0	1		
1111 - 1507	F651		-(TRIM4#)		71834-BZ060-E0	1		
1111 - 1507	F650..LO		-(TRIM4#)		71834-BZ060-E0	1		
1507 - 1607	F650..STD		DK.GRAY(TRIM1#)		71834-BZ060-B0	1		
1507 - 1901	F653		DK.GRAY(TRIM4#)		71834-BZ060-B0	1		
1507 - 1901	F650..LO		DK.GRAY(TRIM4#)		71834-BZ060-B0	1		
1901 -	F65#		DK.GRAY(TRIM4#)		71834-BZ060-B0	1		
	+----------+							
	| 71845D | CAP, REAR SEAT COVER, RH							
	+----------+							
1312 - 1507	F65#				71845-BZ010-	1		
1507 - 1607	F650				71845-BZ010-	1		
	+----------+							
	| 71846E | CAP, REAR SEAT COVER, LH							
	+----------+							
1312 - 1507	F65#				71845-BZ010-	1		
1507 - 1607	F650				71845-BZ010-	1		

FIG.71-51 SEAT & SEAT TRACK

PROD_DATE	MODELS	SPEC CODE	DESCRIPTION	R/P	PART NUMBER	QYT	REV_REF FR	REV_REF TO
	+----------+							
	| 71878A | COVER, REAR SEAT RECLINING, INNER RH							
	+----------+							
1111 - 1507	F650..STD		DK.GRAY(TRIM1#)		71878-BZ010-B0	1		
1111 - 1507	F651		BEIGE(TRIM4#)		71878-BZ010-E1	1		
1111 - 1507	F650..LO		BEIGE(TRIM4#)		71878-BZ010-E1	1		
1507 - 1607	F650..STD		DK.GRAY(TRIM1#)		71878-BZ010-B0	1		
1507 - 1901	F653		DK.GRAY(TRIM4#)		71878-BZ010-B0	1		
1507 - 1901	F650..LO		DK.GRAY(TRIM4#)		71878-BZ010-B0	1		
1901 -	F65#		DK.GRAY(TRIM4#)		71878-BZ010-B0	1		
	+----------+							
	| 71879C | COVER, REAR SEAT RECLINING, INNER LH							
	+----------+							
1111 - 1507	F650..STD		DK.GRAY(TRIM1#)		71879-BZ010-B0	1		
1111 - 1507	F651		BEIGE(TRIM4#)		71879-BZ010-E1	1		
1111 - 1507	F650..LO		BEIGE(TRIM4#)		71879-BZ010-E1	1		
1507 - 1607	F650..STD		DK.GRAY(TRIM1#)		71879-BZ010-B0	1		
1507 - 1901	F653		DK.GRAY(TRIM4#)		71879-BZ010-B0	1		
1507 - 1901	F650..LO		DK.GRAY(TRIM4#)		71879-BZ010-B0	1		
1901 -	F65#		DK.GRAY(TRIM4#)		71879-BZ010-B0	1		
	+----------+							
	| 71910A | HEADREST ASSY, FRONT SEAT							
	+----------+							
1111 - 1305	F650..STD		MD.GRAY(TRIM1#)		71910-BZ730-B0	2		
1111 - 1305	F650..LO		BEIGE(TRIM4#)		71910-BZ730-E0	2		
1111 - 1305	F651..STD		BEIGE(TRIM4#)		71910-BZ730-E0	2		
1111 - 1305	F651..LO		BEIGE(TRIM4#)		71910-BZ790-E0	2		
1305 - 1409	F650..STD		GRAY(TRIM1#)		71910-BZ791-B1	2		
1305 - 1409	F650..LO		BEIGE(TRIM4#)		71910-BZ791-E2	2		
1305 - 1409	F651..STD		BEIGE(TRIM4#)		71910-BZ791-E2	2		
1305 - 1409	F651..LO		BEIGE(TRIM4#)		71910-BZB10-E1	2		
1409 - 1507	F650..STD		GRAY(TRIM1#)		71910-BZ792-B1	2		

PROD_DATE	MODELS	SPEC CODE	DESCRIPTION	R/P	PART NUMBER	QYT	REV_REF FR	REV_REF TO
	+----------+							
	| 71910A | HEADREST ASSY, FRONT SEAT							
	CONTINUED--+							
1409 - 1507	F650..LO		BEIGE(TRIM4#)		71910-BZ792-E2	2		
1409 - 1507	F651..STD		BEIGE(TRIM4#)		71910-BZ792-E2	2		
1409 - 1507	F651..LO		BEIGE(TRIM4#)		71910-BZB11-E1	2		
1507 - 1607	F650..STD		BROWN(TRIM1#)		71910-BZC20-E0	2		
1507 - 1901	F65#..LO		BROWN(TRIM4#)		71910-BZC20-E0	2		
1507 - 1901	F653..STD		BROWN(TRIM4#)		71910-BZC40-E0	2		
1901 -	F653..LO		-(TRIM4#)		71910-BZF10-B0	2		
1901 -	F65#..STD		-(TRIM4#)		71910-BZF20-B0	2		
	+----------+							
	| 71931C | SUPPORT ASSY, REAR NO.2 SEAT HEADREST							
	+----------+							
1111 - 1507	F651		-(TRIM4#),LH		71930-BZ040-E0	2		
1111 - 1507	F650..LO		-(TRIM4#),LH		71930-BZ040-E0	2		
1111 - 1507	F651		-(TRIM4#),RH		71931-BZ030-E0	2		
1111 - 1507	F650..LO		-(TRIM4#),RH		71931-BZ030-E0	2		
1507 - 1901	F653		OAK(TRIM4#),LH		71930-BZ040-E1	2		
1507 - 1901	F650..LO		OAK(TRIM4#),LH		71930-BZ040-E1	2		
1507 - 1901	F653		OAK(TRIM4#),RH		71931-BZ030-E1	2		
1507 - 1901	F650..LO		OAK(TRIM4#),RH		71931-BZ030-E1	2		
1901 -	F65#		DK.GRAY(TRIM4#),LH		71930-BZ040-B0	2		
1901 -	F65#		DK.GRAY(TRIM4#),RH		71931-BZ030-B0	2		
	+----------+							
	| 71935 | CLIP							
	+----------+							
1111 - 1207	F65#				9004A-46143-	34		
1207 - 1305	F65#				9004A-46143-	28		
1305 - 1507	F65#				9004A-46143-	72		
1507 - 1901	F65#				9004A-46143-	72		
1901 -	F65#				9004A-46143-	72		

FIG.71-51 SEAT & SEAT TRACK

PROD_DATE	MODELS	SPEC CODE	DESCRIPTION	R/P	PART NUMBER	QYT	REV_REF FR	REV_REF TO
	+----------+							
	| 71936 | CLIP							
	+----------+							
1111 - 1305	F65#				9004A-46143-	28		
1305 - 1507	F65#				9004A-46143-	25		
1507 - 1607	F650				9004A-46143-	25		
1507 - 1901	F653				9004A-46143-	26		
1901 -	F65#				9004A-46143-	26		
	+----------+							
	| 71940A | HEADREST ASSY, REAR SEAT							
	+----------+							
1111 - 1305	F651..LO		BEIGE(TRIM4#)		71940-BZ230-E0	2		
1111 - 1305	F650..STD		MD.GRAY(TRIM1#)		71940-BZ580-B0	2		
1111 - 1305	F650..LO		BEIGE(TRIM4#)		71940-BZ580-E0	2		
1111 - 1305	F651..STD		BEIGE(TRIM4#)		71940-BZ580-E0	2		
1305 - 1507	F651..LO		BEIGE(TRIM4#)		71940-BZ700-E1	2		
1305 - 1507	F650..STD		GRAY(TRIM1#)		71940-BZ720-B0	2		
1305 - 1507	F650..LO		BEIGE(TRIM4#)		71940-BZ720-E0	2		
1305 - 1507	F651..STD		BEIGE(TRIM4#)		71940-BZ720-E0	2		
1507 - 1607	F650..STD		BROWN(TRIM1#)		71940-BZA50-E0	2		
1507 - 1901	F653..STD		BROWN(TRIM4#)		71940-BZA40-E0	2		
1507 - 1901	F65#..LO		BROWN(TRIM4#)		71940-BZA50-E0	2		
1901 -	F65#..STD		-(TRIM4#)		71940-BZD10-B0	2		
1901 -	F653..LO		-(TRIM4#)		71940-BZD20-B0	2		
	+----------+							
	| 71956A | SUPPORT, FRONT SEAT HEADREST							
	+----------+							
1111 - 1507	F650..STD		DK.GRAY(TRIM1#),LH		71930-BZ040-B0	2		
1111 - 1507	F651		-(TRIM4#),LH		71930-BZ040-E0	2		
1111 - 1507	F650..LO		-(TRIM4#),LH		71930-BZ040-E0	2		
1111 - 1507	F650..STD		DK.GRAY(TRIM1#),RH		71931-BZ030-B0	2		
1111 - 1507	F651		-(TRIM4#),RH		71931-BZ030-E0	2		

PROD_DATE	MODELS	SPEC CODE	DESCRIPTION	R/P	PART NUMBER	QYT	REV_REF FR	REV_REF TO
	+----------+							
	| 71956A | SUPPORT, FRONT SEAT HEADREST							
	CONTINUED--+							
1111 - 1507	F650..LO		-(TRIM4#),RH		71931-BZ030-E0	2		
1507 - 1607	F650..STD		OAK(TRIM1#),LH		71930-BZ040-E1	2		
1507 - 1607	F650..STD		OAK(TRIM1#),RH		71931-BZ030-E1	2		
1507 - 1901	F653		OAK(TRIM4#),LH		71930-BZ040-E1	2		
1507 - 1901	F650..LO		OAK(TRIM4#),LH		71930-BZ040-E1	2		
1507 - 1901	F653		OAK(TRIM4#),RH		71931-BZ030-E1	2		
1507 - 1901	F650..LO		OAK(TRIM4#),RH		71931-BZ030-E1	2		
1901 -	F65#		DK.GRAY(TRIM4#),LH		71930-BZ040-B0	2		
1901 -	F65#		DK.GRAY(TRIM4#),RH		71931-BZ030-B0	2		
	+----------+							
	| 71956B | SUPPORT, REAR SEAT HEADREST							
	+----------+							
1111 - 1507	F650..STD		DK.GRAY(TRIM1#),LH		71930-BZ040-B0	2		
1111 - 1507	F651		-(TRIM4#),LH		71930-BZ040-E0	2		
1111 - 1507	F650..LO		-(TRIM4#),LH		71930-BZ040-E0	2		
1111 - 1507	F650..STD		DK.GRAY(TRIM1#),RH		71931-BZ030-B0	2		
1111 - 1507	F651		-(TRIM4#),RH		71931-BZ030-E0	2		
1111 - 1507	F650..LO		-(TRIM4#),RH		71931-BZ030-E0	2		
1507 - 1607	F650..STD		OAK(TRIM1#),LH		71930-BZ040-E1	2		
1507 - 1607	F650..STD		OAK(TRIM1#),RH		71931-BZ030-E1	2		
1507 - 1901	F653		OAK(TRIM4#),LH		71930-BZ040-E1	2		
1507 - 1901	F650..LO		OAK(TRIM4#),LH		71930-BZ040-E1	2		
1507 - 1901	F653		OAK(TRIM4#),RH		71931-BZ030-E1	2		
1507 - 1901	F650..LO		OAK(TRIM4#),RH		71931-BZ030-E1	2		
1901 -	F65#		DK.GRAY(TRIM4#),LH		71930-BZ040-B0	2		
1901 -	F65#		DK.GRAY(TRIM4#),RH		71931-BZ030-B0	2		

FIG.71-51 SEAT & SEAT TRACK

PROD_DATE	MODELS	SPEC CODE	DESCRIPTION	R/P	PART NUMBER	QYT	REV_REF FR	REV_REF TO
	+----------+							
	| 71970 | HEADREST ASSY, REAR SEAT							
	+----------+							
1111 - 1304	F650..LO		BEIGE(TRIM4#)		71940-BZ460-E2	2		
1111 - 1304	F651..STD		BEIGE(TRIM4#)		71940-BZ460-E2	2		
1111 - 1305	F651..LO		BEIGE(TRIM4#)		71940-BZ460-E2	2		
1305 - 1507	F650..LO		BEIGE(TRIM4#)		71940-BZ461-E3	2		
1305 - 1507	F651..STD		BEIGE(TRIM4#)		71940-BZ461-E3	2		
1305 - 1507	F651..LO		BEIGE(TRIM4#)		71940-BZ710-E1	2		
1507 - 1901	F65#..LO		BROWN(TRIM4#)		71940-BZA80-E1	2		
1507 - 1901	F653..STD		BROWN(TRIM4#)		71940-BZA90-E1	2		
1901 -	F653..LO		-(TRIM4#)		71940-BZD30-B0	2		
1901 -	F65#..STD		-(TRIM4#)		71940-BZD40-B0	2		
	+----------+							
	| 72110A | TRACK ASSY, FRONT SEAT, OUTER RH							
	+----------+							
1111 - 1305	F65#				72110-BZ190-	1		
1305 - 1507	F65#				72110-BZ191-	1		
1507 - 1901	F65#				72110-BZ191-	1		
1901 -	F65#				72110-BZ191-	1		
	+----------+							
	| 72120 | TRACK ASSY, FRONT SEAT, OUTER LH							
	+----------+							
1111 - 1305	F65#				72120-BZ200-	1		
1305 - 1507	F65#				72120-BZ201-	1		
1507 - 1901	F65#				72120-BZ201-	1		
1901 -	F65#				72120-BZ201-	1		
	+----------+							
	| 72130A | TRACK ASSY, FRONT SEAT, INNER RH							
	+----------+							
1111 - 1507	F65#				72130-BZ230-	1		
1507 - 1901	F65#				72130-BZ230-	1		
1901 -	F65#				72130-BZ230-	1		

PROD_DATE	MODELS	SPEC CODE	DESCRIPTION	R/P	PART NUMBER	QYT	REV_REF FR	REV_REF TO
	+----------+							
	| 72137B | COVER, SEAT TRACK, RH							
	+----------+							
1111 - 1507	F65#				72137-BZ040-	2		
1507 - 1901	F65#				72137-BZ040-	2		
1901 -	F65#				72137-BZ040-	2		
	+----------+							
	| 72138B | COVER, SEAT TRACK, LH							
	+----------+							
1111 - 1507	F65#				72137-BZ040-	2		
1507 - 1901	F65#				72137-BZ040-	2		
1901 -	F65#				72137-BZ040-	2		
	+----------+							
	| 72140A | TRACK ASSY, FRONT SEAT,INNER LH							
	+----------+							
1111 - 1507	F65#				72140-BZ230-	1		
1507 - 1901	F65#				72140-BZ230-	1		
1901 -	F65#				72140-BZ230-	1		
	+----------+							
	| 72157A | COVER, SEAT TRACK BRACKET, INNER RH							
	+----------+							
1111 - 1507	F650..STD		DK.GRAY(TRIM1#)		72157-BZ020-B0	1		
1111 - 1507	F651		DK.GRAY(TRIM4#)		72157-BZ020-B0	1		
1111 - 1507	F650..LO		DK.GRAY(TRIM4#)		72157-BZ020-B0	1		
1507 - 1607	F650..STD		DK.GRAY(TRIM1#)		72157-BZ020-B0	1		
1507 - 1901	F653		DK.GRAY(TRIM4#)		72157-BZ020-B0	1		
1507 - 1901	F650..LO		DK.GRAY(TRIM4#)		72157-BZ020-B0	1		
1901 -	F65#		DK.GRAY(TRIM4#)		72157-BZ020-B0	1		
	+----------+							
	| 72158B | COVER, SEAT TRACK BRACKET, INNER LH							
	+----------+							
1111 - 1507	F650..STD		DK.GRAY(TRIM1#)		72158-BZ020-B0	1		
1111 - 1507	F651		DK.GRAY(TRIM4#)		72158-BZ020-B0	1		
1111 - 1507	F650..LO		DK.GRAY(TRIM4#)		72158-BZ020-B0	1		
1507 - 1607	F650..STD		DK.GRAY(TRIM1#)		72158-BZ020-B0	1		

FIG.71-51 SEAT & SEAT TRACK

PROD_DATE	MODELS	SPEC CODE	DESCRIPTION	R/P	PART NUMBER	QYT	REV_REF FR	REV_REF TO
	+----------+							
	| 72158B | COVER, SEAT TRACK BRACKET, INNER LH							
	CONTINUED--+							
1507 - 1901	F653		DK.GRAY(TRIM4#)		72158-BZ020-B0	1		
1507 - 1901	F650..LO		DK.GRAY(TRIM4#)		72158-BZ020-B0	1		
1901 -	F65#		DK.GRAY(TRIM4#)		72158-BZ020-B0	1		
	+----------+							
	| 72159A | COVER, REAR SEAT TRACK BRACKET							
	+----------+							
1111 - 1405	F651		DK.GRAY(TRIM4#)		72159-BZ010-B0	4		
				#	(72159-BZ011-B0)	1		
1111 - 1405	F650..LO		DK.GRAY(TRIM4#)		72159-BZ010-B0	4		
				#	(72159-BZ011-B0)	1		
1406 - 1507	F651		DK.GRAY(TRIM4#)		72159-BZ011-B0	4		
1406 - 1507	F650..LO		DK.GRAY(TRIM4#)		72159-BZ011-B0	4		
1507 - 1901	F653		DK.GRAY(TRIM4#)		72159-BZ011-B0	4		
1901 -	F65#		DK.GRAY(TRIM4#)		72159-BZ011-B0	4		
	+----------+							
	| 72160C | TRACK ASSY, REAR NO.1 SEAT, OUTER RH							
	+----------+							
1111 - 1507	F651				72160-BZ040-	1		
1111 - 1507	F650..LO				72160-BZ040-	1		
1507 - 1901	F653				72160-BZ040-	1		
1901 -	F65#				72160-BZ040-	1		
	+----------+							
	| 72170C | TRACK ASSY, REAR NO.1 SEAT, INNER RH							
	+----------+							
1111 - 1507	F651				72170-BZ040-	1		
1111 - 1507	F650..LO				72170-BZ040-	1		
1507 - 1901	F653				72170-BZ040-	1		
1901 -	F65#				72170-BZ040-	1		
	+----------+							
	| 72170D | TRACK ASSY, REAR SEAT, OUTER LH							
	+----------+							
1111 - 1507	F651				72210-BZ040-	1		
1111 - 1507	F650..LO				72210-BZ040-	1		

PROD_DATE	MODELS	SPEC CODE	DESCRIPTION	R/P	PART NUMBER	QYT	REV_REF FR	REV_REF TO
	+----------+							
	| 72170D | TRACK ASSY, REAR SEAT, OUTER LH							
	CONTINUED--+							
1507 - 1901	F653				72210-BZ040-	1		
1901 -	F65#				72210-BZ040-	1		
	+----------+							
	| 72211B | HANDLE, SEAT TRACK ADJUSTING							
	+----------+							
1111 - 1507	F65#				72211-BZ080-	2		
1507 - 1901	F65#				72211-BZ080-	2		
1901 -	F65#				72211-BZ080-	2		
	+----------+							
	| 72213B | KNOB, SEAT TRACK ADJUSTING HANDLE, RH							
	+----------+							
1312 - 1507	F65#				72213-BZ010-	1		
1507 - 1901	F65#				72213-BZ010-	1		
1901 -	F65#				72213-BZ010-	1		
	+----------+							
	| 72213C | KNOB, SEAT TRACK ADJUSTING HANDLE, LH							
	+----------+							
1312 - 1507	F65#				72213-BZ010-	1		
1507 - 1901	F65#				72213-BZ010-	1		
1901 -	F65#				72213-BZ010-	1		
	+----------+							
	| 72213F | KNOB, SEAT TRACK ADJUSTING HANDLE							
	+----------+							
1507 - 1901	F653				72213-BZ010-	2		
1901 -	F65#				72213-BZ010-	2		
	+----------+							
	| 72220 | TRACK ASSY, REAR NO.1 SEAT, INNER LH							
	+----------+							
1111 - 1507	F651				72220-BZ030-	1		
1111 - 1507	F650..LO				72220-BZ030-	1		
1507 - 1901	F653				72220-BZ030-	1		
1901 -	F65#				72220-BZ030-	1		

FIG.71-51 SEAT & SEAT TRACK

PROD_DATE	MODELS	SPEC CODE	DESCRIPTION	R/P	PART NUMBER	QYT	REV_REF FR	REV_REF TO
	+----------+							
	| 72525A | HANDLE, RECLINING ADJUSTER RELEASE, RH							
	+----------+							
1111 - 1507	F650..STD		DK.GRAY(TRIM1#)		72525-BZ110-B0	1		
1111 - 1507	F651		-(TRIM4#)		72525-BZ110-E0	1		
1111 - 1507	F650..LO		-(TRIM4#)		72525-BZ110-E0	1		
1507 - 1607	F650..STD		DK.GRAY(TRIM1#)		72525-BZ110-B0	1		
1507 - 1901	F653		DK.GRAY(TRIM4#)		72525-BZ110-B0	1		
1507 - 1901	F650..LO		DK.GRAY(TRIM4#)		72525-BZ110-B0	1		
1901 -	F65#		DK.GRAY(TRIM4#)		72525-BZ110-B0	1		
	+----------+							
	| 72526A | HANDLE, RECLINING ADJUSTER RELEASE, LH							
	+----------+							
1111 - 1507	F650..STD		DK.GRAY(TRIM1#)		72526-BZ100-B0	1		
1111 - 1507	F651		-(TRIM4#)		72526-BZ100-E0	1		
1111 - 1507	F650..LO		-(TRIM4#)		72526-BZ100-E0	1		
1507 - 1607	F650..STD		DK.GRAY(TRIM1#)		72526-BZ100-B0	1		
1507 - 1901	F653		DK.GRAY(TRIM4#)		72526-BZ100-B0	1		
1507 - 1901	F650..LO		DK.GRAY(TRIM4#)		72526-BZ100-B0	1		
1901 -	F65#		DK.GRAY(TRIM4#)		72526-BZ100-B0	1		
	+----------+							
	| 72610 | LOCK ASSY, REAR SEAT CUSHION							
	+----------+							
1507 - 1607	F650				72670-BZ090-	1		
	+----------+							
	| 72637A | HANDLE, REAR SEAT LOCK							
	+----------+							
1111 - 1507	F650..STD		DK.GRAY(TRIM1#)		72637-BZ110-B0	1		
1111 - 1507	F651		-(TRIM4#)		72637-BZ110-E0	1		
1111 - 1507	F650..LO		-(TRIM4#)		72637-BZ110-E0	1		
1507 - 1607	F650..STD		DK.GRAY(TRIM1#)		72637-BZ110-B0	1		
1507 - 1901	F653		DK.GRAY(TRIM4#)		72637-BZ110-B0	1		
1507 - 1901	F650..LO		DK.GRAY(TRIM4#)		72637-BZ110-B0	1		

PROD_DATE	MODELS	SPEC CODE	DESCRIPTION	R/P	PART NUMBER	QYT	REV_REF FR	REV_REF TO
	+----------+							
	| 72637A | HANDLE, REAR SEAT LOCK							
	CONTINUED--+							
1901 -	F65#		DK.GRAY(TRIM4#)		72637-BZ110-B0	1		
	+----------+							
	| 72638 | HANDLE, REAR SEAT LOCK, LH							
	+----------+							
1111 - 1507	F650..STD		DK.GRAY(TRIM1#)		72637-BZ110-B0	1		
1111 - 1507	F651		-(TRIM4#)		72637-BZ110-E0	1		
1111 - 1507	F650..LO		-(TRIM4#)		72637-BZ110-E0	1		
1507 - 1607	F650..STD		DK.GRAY(TRIM1#)		72637-BZ110-B0	1		
1507 - 1901	F653		DK.GRAY(TRIM4#)		72637-BZ110-B0	1		
1507 - 1901	F650..LO		DK.GRAY(TRIM4#)		72637-BZ110-B0	1		
1901 -	F65#		DK.GRAY(TRIM4#)		72637-BZ110-B0	1		
	+----------+							
	| 72658B | KNOB, REAR SEAT LOCK HANDLE							
	+----------+							
1507 - 1901	F653		DK.GRAY(TRIM4#)		72658-BZ010-B0	1		
1901 -	F65#		DK.GRAY(TRIM4#)		72658-BZ010-B0	1		
	+----------+							
	| 72658D | KNOB, REAR SEAT LOCK HANDLE							
	+----------+							
1507 - 1901	F653		DK.GRAY(TRIM4#)		72658-BZ020-B0	1		
1901 -	F65#		DK.GRAY(TRIM4#)		72658-BZ020-B0	1		
	+----------+							
	| 72658F | KNOB, REAR SEAT LOCK HANDLE							
	+----------+							
1507 - 1607	F650..STD		DK.GRAY(TRIM1#)		72658-BZ010-B0	1		
1507 - 1607	F650..LO		DK.GRAY(TRIM4#)		72658-BZ010-B0	1		
	+----------+							
	| 72665C | COVER, REAR SEAT LOCK, RH							
	+----------+							
1111 - 1507	F651		DK.GRAY(TRIM4#)		72665-BZ070-B0	1		
1111 - 1507	F650..LO		DK.GRAY(TRIM4#)		72665-BZ070-B0	1		
1507 - 1901	F653		DK.GRAY(TRIM4#)		72665-BZ070-B0	1		
1901 -	F65#		DK.GRAY(TRIM4#)		72665-BZ070-B0	1		

FIG.71-51 SEAT & SEAT TRACK

PROD_DATE	MODELS	SPEC CODE	DESCRIPTION	R/P	PART NUMBER	QYT	REV_REF FR	REV_REF TO
	+----------+							
	| 72666B | COVER, REAR SEAT LOCK, LH							
	+----------+							
1111 - 1507	F651		DK.GRAY(TRIM4#)		72666-BZ050-B0	1		
1111 - 1507	F650..LO		DK.GRAY(TRIM4#)		72666-BZ050-B0	1		
1507 - 1901	F653		DK.GRAY(TRIM4#)		72666-BZ050-B0	1		
1901 -	F65#		DK.GRAY(TRIM4#)		72666-BZ050-B0	1		
	+----------+							
	| 72670B | LOCK ASSY, REAR SEAT CUSHION, RH							
	+----------+							
1111 - 1507	F650..STD				72670-BZ040-	1		
1111 - 1507	F651				72670-BZ050-	1		
1111 - 1507	F650..LO				72670-BZ050-	1		
1507 - 1607	F650				72670-BZ040-	1		
1507 - 1901	F653				72670-BZ050-	1		
1901 -	F65#				72670-BZ050-	1		
	+----------+							
	| 72670C | LOCK ASSY, REAR SEAT CUSHION, NO.2 RH							
	+----------+							
1507 - 1901	F653				72670-BZ120-	1		
1901 -	F65#				72670-BZ120-	1		
	+----------+							
	| 72680B | LOCK ASSY, REAR SEAT CUSHION, LH							
	+----------+							
1111 - 1507	F650..STD				72680-BZ130-	1		
1111 - 1507	F651				72680-BZ140-	1		
1111 - 1507	F650..LO				72680-BZ140-	1		
1507 - 1607	F650				72680-BZ130-	1		
1507 - 1901	F653				72680-BZ140-	1		
1901 -	F65#				72680-BZ140-	1		
	+----------+							
	| 72680C | LOCK ASSY, REAR SEAT CUSHION, NO.2 LH							
	+----------+							
1111 - 1507	F65#				72680-BZ070-	1		
1507 - 1901	F653				72680-BZ190-	1		

PROD_DATE	MODELS	SPEC CODE	DESCRIPTION	R/P	PART NUMBER	QYT	REV_REF FR	REV_REF TO
	+----------+							
	| 72680C | LOCK ASSY, REAR SEAT CUSHION, NO.2 LH							
	CONTINUED--+							
1901 -	F65#				72680-BZ190-	1		
	+----------+							
	| 72694 | COVER, REAR SEAT CUSHION LOCK							
	+----------+							
1111 - 1507	F650..STD		DK.GRAY(TRIM1#),RH		72694-BZ070-B0	1		
1111 - 1507	F650..STD		DK.GRAY(TRIM1#),LH		72694-BZ080-B0	1		
1507 - 1607	F650..STD		DK.GRAY(TRIM1#),RH		72694-BZ070-B0	1		
1507 - 1607	F650..LO		DK.GRAY(TRIM4#),RH		72694-BZ070-B0	1		
1507 - 1607	F650..STD		DK.GRAY(TRIM1#),LH		72694-BZ080-B0	1		
1507 - 1607	F650..LO		DK.GRAY(TRIM4#),LH		72694-BZ080-B0	1		
	+----------+							
	| 72695A | CABLE, REAR SEAT LOCK CONTROL							
	+----------+							
1111 - 1507	F651				72695-BZ060-	2		
1111 - 1507	F650..LO				72695-BZ060-	2		
1111 - 1507	F650..STD				72695-BZ070-	2		
1507 - 1607	F650				72695-BZ070-	2		
1507 - 1901	F653				72695-BZ060-	2		
1901 -	F65#				72695-BZ060-	2		
	+----------+							
	| 72927B | COVER, REAR SEAT CUSHION UNDER							
	+----------+							
1507 - 1607	F650..STD		DK.GRAY(TRIM1#)		79952-BZ080-B0	1		
1507 - 1607	F650..LO		DK.GRAY(TRIM4#)		79952-BZ080-B0	1		
1507 - 1901	F653		DK.GRAY(TRIM4#),LH		79225-BZ080-B0	1		
1507 - 1901	F653		DK.GRAY(TRIM4#),RH		79952-BZ100-B0	1		
1901 -	F65#		DK.GRAY(TRIM4#),LH		79225-BZ080-B0	1		
1901 -	F65#		DK.GRAY(TRIM4#),RH		79952-BZ100-B0	1		
	+----------+							
	| 72928A | COVER, REAR SEAT CUSHION UNDER, NO.2							
	+----------+							
1507 - 1607	F650..STD		DK.GRAY(TRIM1#)		79952-BZ070-B0	1		

FIG.71-51 SEAT & SEAT TRACK

PROD_DATE	MODELS	SPEC CODE	DESCRIPTION	R/P	PART NUMBER	QYT	REV_REF FR	REV_REF TO
	+----------+							
	| 72928A | COVER, REAR SEAT CUSHION UNDER, NO.2							
	CONTINUED--+							
1507 - 1607	F650..LO		DK.GRAY(TRIM4#)		79952-BZ070-B0	1		
1507 - 1901	F653		DK.GRAY(TRIM4#),LH		79225-BZ070-B0	1		
1507 - 1901	F653		DK.GRAY(TRIM4#),RH		79952-BZ090-B0	1		
1901 -	F65#		DK.GRAY(TRIM4#),LH		79225-BZ070-B0	1		
1901 -	F65#		DK.GRAY(TRIM4#),RH		79952-BZ090-B0	1		
	+----------+							
	| 72991 | COVER, FRONT SEAT CUSHION, RH							
	+----------+							
1111 - 1507	F65#		RH SEAT-OUTER		72925-BZ010-	1		
1111 - 1507	F65#		LH SEAT-INNER		72926-BZ010-	1		
1507 - 1901	F65#		RH SEAT-OUTER		72925-BZ010-	1		
1507 - 1901	F65#		LH SEAT-INNER		72926-BZ010-	1		
1901 -	F65#		RH SEAT-OUTER		72925-BZ010-	1		
1901 -	F65#		LH SEAT-INNER		72926-BZ010-	1		
	+----------+							
	| 72992 | COVER, FRONT SEAT CUSHION, LH							
	+----------+							
1111 - 1507	F65#		LH SEAT-OUTER		72925-BZ010-	1		
1111 - 1507	F65#		RH SEAT-INNER		72926-BZ010-	1		
1507 - 1901	F65#		LH SEAT-OUTER		72925-BZ010-	1		
1507 - 1901	F65#		RH SEAT-INNER		72926-BZ010-	1		
1901 -	F65#		LH SEAT-OUTER		72925-BZ010-	1		
1901 -	F65#		RH SEAT-INNER		72926-BZ010-	1		
	+----------+							
	| 73949 | CAP							
	+----------+							
1111 - 1305	F65#				73949-BZ050-	2		
	+----------+							
	| 79011 | COVER SUB-ASSY, NO.1 SEAT CUSHION, RH							
	+----------+							
1111 - 1507	F650..STD		DK.GRAY(TRIM1#)		79011-BZ020-B0	1		
1111 - 1507	F651		-(TRIM4#)		79011-BZ020-E0	1		

PROD_DATE	MODELS	SPEC CODE	DESCRIPTION	R/P	PART NUMBER	QYT	REV_REF FR	REV_REF TO
	+----------+							
	| 79011 | COVER SUB-ASSY, NO.1 SEAT CUSHION, RH							
	CONTINUED--+							
1111 - 1507	F650..LO		-(TRIM4#)		79011-BZ020-E0	1		
1507 - 1607	F650..STD		DK.GRAY(TRIM1#)		79011-BZ020-B0	1		
1507 - 1607	F650..LO		DK.GRAY(TRIM4#)		79011-BZ020-B0	1		
1507 - 1901	F653		DK.GRAY(TRIM4#)		79011-BZ020-B0	1		
1901 -	F65#		DK.GRAY(TRIM4#)		79011-BZ020-B0	1		
	+----------+							
	| 79012 | COVER SUB-ASSY, NO.1 SEAT CUSHION, LH							
	+----------+							
1111 - 1507	F650..STD		DK.GRAY(TRIM1#)		79012-BZ020-B0	1		
1111 - 1507	F651		-(TRIM4#)		79012-BZ020-E0	1		
1111 - 1507	F650..LO		-(TRIM4#)		79012-BZ020-E0	1		
1507 - 1607	F650..STD		DK.GRAY(TRIM1#)		79012-BZ020-B0	1		
1507 - 1607	F650..LO		DK.GRAY(TRIM4#)		79012-BZ020-B0	1		
1507 - 1901	F653		DK.GRAY(TRIM4#)		79012-BZ020-B0	1		
1901 -	F65#		DK.GRAY(TRIM4#)		79012-BZ020-B0	1		
	+----------+							
	| 79021 | COVER SUB-ASSY, NO.2 SEAT CUSHION, RH							
	+----------+							
1507 - 1901	F653..LO		BROWN(TRIM4#)		79021-BZ770-E0	1		
1507 - 1901	F653..STD		BROWN(TRIM4#)		79021-BZ780-E0	1		
1901 -	F653..LO		-(TRIM4#)		79021-BZ870-B0	1		
1901 -	F65#..STD		-(TRIM4#)		79021-BZ880-B0	1		
	+----------+							
	| 79021A | COVER SUB-ASSY, NO.2 SEAT CUSHION							
	+----------+							
1111 - 1305	F650..STD		GRAY(TRIM1#)		79021-BZ510-B0	1		
1111 - 1305	F650..LO		BEIGE(TRIM4#)		79021-BZ520-E1	1		
1111 - 1305	F651..STD		BEIGE(TRIM4#)		79021-BZ520-E1	1		
1111 - 1305	F651..LO		BEIGE(TRIM4#)		79021-BZ540-E0	1		
1305 - 1312	F650..STD		GRAY(TRIM1#)		79021-BZ511-B0	1		

FIG.71-51 SEAT & SEAT TRACK

PROD_DATE	MODELS	SPEC CODE	DESCRIPTION	R/P	PART NUMBER	QYT	REV_REF FR	REV_REF TO
	+----------+							
	| 79021A | COVER SUB-ASSY, NO.2 SEAT CUSHION							
	CONTINUED--+							
1305 - 1312	F650..LO		BEIGE(TRIM4#)		79021-BZ521-E2	1		
1305 - 1312	F651..STD		BEIGE(TRIM4#)		79021-BZ521-E2	1		
1305 - 1312	F651..LO		BEIGE(TRIM4#)		79021-BZ541-E1	1		
1312 - 1507	F650..STD		GRAY(TRIM1#)		79021-BZ512-B0	1		
1312 - 1507	F650..LO		BEIGE(TRIM4#)		79021-BZ522-E2	1		
1312 - 1507	F651..STD		BEIGE(TRIM4#)		79021-BZ522-E2	1		
1312 - 1507	F651..LO		BEIGE(TRIM4#)		79021-BZ542-E1	1		
1507 - 1607	F650..STD		BROWN(TRIM1#)		79021-BZ750-E0	1		
1507 - 1607	F650..LO		BROWN(TRIM4#)		79021-BZ760-E0	1		
	+----------+							
	| 79022 | COVER SUB-ASSY, NO.2 SEAT CUSHION, LH							
	+----------+							
1507 - 1901	F653..LO		BROWN(TRIM4#)		79022-BZ010-E0	1		
1507 - 1901	F653..STD		BROWN(TRIM4#)		79022-BZ020-E0	1		
1901 -	F653..LO		-(TRIM4#)		79022-BZ100-B0	1		
1901 -	F65#..STD		-(TRIM4#)		79022-BZ110-B0	1		
	+----------+							
	| 79023 | COVER SUB-ASSY, NO.2 SEAT BACK, RH							
	+----------+							
1111 - 1305	F650..STD		GRAY(TRIM1#)		79023-BZ480-B0	1		
1111 - 1305	F650..LO		BEIGE(TRIM4#)		79023-BZ490-E1	1		
1111 - 1305	F651..STD		BEIGE(TRIM4#)		79023-BZ490-E1	1		
1111 - 1305	F651..LO		BEIGE(TRIM4#)		79023-BZ500-E0	1		
1305 - 1507	F650..STD		GRAY(TRIM1#)		79023-BZ481-B0	1		
1305 - 1507	F650..LO		BEIGE(TRIM4#)		79023-BZ491-E2	1		
1305 - 1507	F651..STD		BEIGE(TRIM4#)		79023-BZ491-E2	1		
1305 - 1507	F651..LO		BEIGE(TRIM4#)		79023-BZ501-E1	1		
1507 - 1607	F650..STD		BROWN(TRIM1#)		79023-BZ690-E0	1		
1507 - 1607	F650..LO		BROWN(TRIM4#)		79023-BZ700-E0	1		

PROD_DATE	MODELS	SPEC CODE	DESCRIPTION	R/P	PART NUMBER	QYT	REV_REF FR	REV_REF TO
	+----------+							
	| 79023 | COVER SUB-ASSY, NO.2 SEAT BACK, RH							
	CONTINUED--+							
1507 - 1901	F653..LO		BROWN(TRIM4#)		79023-BZ710-E0	1		
1507 - 1901	F653..STD		BROWN(TRIM4#)		79023-BZ720-E0	1		
1901 -	F653..LO		-(TRIM4#)		79023-BZ820-B0	1		
1901 -	F65#..STD		-(TRIM4#)		79023-BZ830-B0	1		
	+----------+							
	| 79024 | COVER SUB-ASSY, NO.2 SEAT BACK, LH							
	+----------+							
1111 - 1305	F650..STD		GRAY(TRIM1#)		79024-BZ010-B0	1		
1111 - 1305	F650..LO		BEIGE(TRIM4#)		79024-BZ020-E1	1		
1111 - 1305	F651..STD		BEIGE(TRIM4#)		79024-BZ020-E1	1		
1111 - 1305	F651..LO		BEIGE(TRIM4#)		79024-BZ030-E0	1		
1305 - 1507	F650..STD		GRAY(TRIM1#)		79024-BZ011-B0	1		
1305 - 1507	F650..LO		BEIGE(TRIM4#)		79024-BZ021-E2	1		
1305 - 1507	F651..STD		BEIGE(TRIM4#)		79024-BZ021-E2	1		
1305 - 1507	F651..LO		BEIGE(TRIM4#)		79024-BZ031-E1	1		
1507 - 1607	F650..STD		BROWN(TRIM1#)		79024-BZ240-E0	1		
1507 - 1607	F650..LO		BROWN(TRIM4#)		79024-BZ250-E0	1		
1507 - 1901	F653..LO		BROWN(TRIM4#)		79024-BZ260-E0	1		
1507 - 1901	F653..STD		BROWN(TRIM4#)		79024-BZ270-E0	1		
1901 -	F653..LO		-(TRIM4#)		79024-BZ350-B0	1		
1901 -	F65#..STD		-(TRIM4#)		79024-BZ360-B0	1		
	+----------+							
	| 79035A | PAD SUB-ASSY, NO.3 SEAT CUSHION, RH							
	+----------+							
1111 - 1507	F651				79035-BZ150-	1		
1111 - 1507	F650..LO				79035-BZ150-	1		
1111 - 1507	F650..STD				79035-BZ160-	1		
1507 - 1607	F650..LO				79035-BZ150-	1		
1507 - 1607	F650..STD				79035-BZ160-	1		

FIG.71-51 SEAT & SEAT TRACK

PROD_DATE	MODELS	SPEC CODE	DESCRIPTION	R/P	PART NUMBER	QYT	REV_REF FR	REV_REF TO
	+----------+							
	| 79037A | PAD SUB-ASSY, NO.3 SEAT BACK, RH							
	+----------+							
1111 - 1507	F651				79037-BZ130-	1		
1111 - 1507	F650..LO				79037-BZ130-	1		
1111 - 1507	F650..STD				79037-BZ160-	1		
1507 - 1607	F650..LO				79037-BZ130-	1		
1507 - 1607	F650..STD				79037-BZ160-	1		
1507 - 1901	F653				79037-BZ210-	1		
1901 -	F65#				79037-BZ210-	1		
	+----------+							
	| 79038A | PAD SUB-ASSY, NO.3 SEAT BACK, LH							
	+----------+							
1111 - 1507	F651				79038-BZ030-	1		
1111 - 1507	F650..LO				79038-BZ030-	1		
1111 - 1507	F650..STD				79038-BZ060-	1		
1507 - 1607	F650..LO				79038-BZ030-	1		
1507 - 1607	F650..STD				79038-BZ060-	1		
1507 - 1901	F653				79038-BZ110-	1		
1901 -	F65#				79038-BZ110-	1		
	+----------+							
	| 79076D | CLIP, SEAT LEG COVER							
	+----------+							
1111 - 1507	F650..STD		DK.GRAY(TRIM1#)		90044-67579-B0	2		
1111 - 1507	F651		DK.GRAY(TRIM4#)		90044-67579-B0	2		
1111 - 1507	F650..LO		DK.GRAY(TRIM4#)		90044-67579-B0	2		
1507 - 1607	F650..STD		DK.GRAY(TRIM1#)		90044-67579-B0	2		
1507 - 1607	F650..LO		DK.GRAY(TRIM4#)		90044-67579-B0	2		
1507 - 1702	F653		DK.GRAY(TRIM4#)		90044-67579-B0	4		
1702 - 1901	F653		BLACK(TRIM4#)		90044-67579-C2	4		
1901 -	F65#		BLACK(TRIM4#)		90044-67579-C2	4		

PROD_DATE	MODELS	SPEC CODE	DESCRIPTION	R/P	PART NUMBER	QYT	REV_REF FR	REV_REF TO
	+----------+							
	| 79107D | LEG SUB-ASSY, NO.2 SEAT, REAR							
	+----------+							
1111 - 1507	F65#				79206-BZ050-	1		
1507 - 1607	F650				79206-BZ070-	1		
	+----------+							
	| 79165 | BRACKET, NO.3 SEAT LEG, REAR RH							
	+----------+							
1111 - 1312	F65#				79318-BZ010-	1		
1312 - 1507	F65#				79318-BZ020-	1		
1507 - 1607	F650				79318-BZ030-	1		
1507 - 1901	F653				79318-BZ030-	2		
1901 -	F65#				79318-BZ030-	2		
	+----------+							
	| 79166 | BRACKET, NO.3 SEAT LEG, REAR LH							
	+----------+							
1111 - 1312	F65#				79328-BZ010-	1		
1312 - 1507	F65#				79328-BZ020-	1		
1507 - 1607	F650				79328-BZ040-	1		
1507 - 1901	F653				79328-BZ040-	2		
1901 -	F65#				79328-BZ040-	2		
	+----------+							
	| 79205B | LEG SUB-ASSY, NO.2 SEAT, RH							
	+----------+							
1507 - 1901	F653				79207-BZ020-	1		
1901 -	F65#				79207-BZ020-	1		
	+----------+							
	| 79206B | LEG SUB-ASSY, NO.2 SEAT, LH							
	+----------+							
1507 - 1901	F653				79208-BZ020-	1		
1901 -	F65#				79208-BZ020-	1		
	+----------+							
	| 79225B | CARPET, REAR NO.2 SEAT CUSHION, LH							
	+----------+							
1111 - 1507	F650..STD		DK.GRAY(TRIM1#)		79225-BZ040-B0	1		
1111 - 1507	F651		DK.GRAY(TRIM4#)		79225-BZ040-B0	1		

FIG.71-51 SEAT & SEAT TRACK

PROD_DATE	MODELS	SPEC CODE	DESCRIPTION	R/P	PART NUMBER	QYT	REV_REF FR	REV_REF TO
	+----------+							
	| 79225B | CARPET, REAR NO.2 SEAT CUSHION, LH							
	CONTINUED--+							
1111 - 1507	F650..LO		DK.GRAY(TRIM4#)		79225-BZ040-B0	1		
	+----------+							
	| 79236A | COVER, NO.2 SEAT LEG							
	+----------+							
1111 - 1312	F650..STD		DK.GRAY(TRIM1#)		79236-BZ040-B0	2		
1111 - 1312	F651		DK.GRAY(TRIM4#)		79236-BZ040-B0	2		
1111 - 1312	F650..LO		DK.GRAY(TRIM4#)		79236-BZ040-B0	2		
1312 - 1507	F650..STD		DK.GRAY(TRIM1#)		79236-BZ070-B0	2		
1312 - 1507	F651		DK.GRAY(TRIM4#)		79236-BZ070-B0	2		
1312 - 1507	F650..LO		DK.GRAY(TRIM4#)		79236-BZ070-B0	2		
1507 - 1607	F650..STD		DK.GRAY(TRIM1#)		79236-BZ080-B0	2		
1507 - 1607	F650..LO		DK.GRAY(TRIM4#)		79236-BZ080-B0	2		
1507 - 1901	F653		DK.GRAY(TRIM4#)		79236-BZ080-B0	4		
1901 -	F65#		DK.GRAY(TRIM4#)		79236-BZ080-B0	4		
	+----------+							
	| 79236B | COVER, NO.2 SEAT LEG, LH							
	+----------+							
1507 - 1901	F653		DK.GRAY(TRIM4#)		79246-BZ070-B0	1		
1901 -	F65#		DK.GRAY(TRIM4#)		79246-BZ070-B0	1		
	+----------+							
	| 79246 | COVER, NO.2 SEAT LEG, NO.1							
	+----------+							
1507 - 1901	F653		DK.GRAY(TRIM4#)		79236-BZ090-B0	1		
1901 -	F65#		DK.GRAY(TRIM4#)		79236-BZ090-B0	1		
	+----------+							
	| 79273 | COVER, NO.2 SEAT HINGE							
	+----------+							
1111 - 1507	F650..STD		DK.GRAY(TRIM1#)		79273-BZ040-B0	1		
1111 - 1507	F651		DK.GRAY(TRIM4#)		79273-BZ040-B0	1		
1111 - 1507	F650..LO		DK.GRAY(TRIM4#)		79273-BZ040-B0	1		

PROD_DATE	MODELS	SPEC CODE	DESCRIPTION	R/P	PART NUMBER	QYT	REV_REF FR	REV_REF TO
	+----------+							
	| 79303A | FRAME SUB-ASSY, NO.3 SEAT BACK, RH							
	+----------+							
1111 - 1312	F650..STD				79303-BZ100-	1		
1111 - 1312	F651				79303-BZ120-	1		
1111 - 1312	F650..LO				79303-BZ120-	1		
1312 - 1507	F650..STD				79303-BZ101-	1		
1312 - 1507	F651				79303-BZ170-	1		
1312 - 1507	F650..LO				79303-BZ170-	1		
1507 - 1607	F650..STD				79303-BZ180-	1		
1507 - 1901	F653				79303-BZ190-	1		
1507 - 1901	F650..LO				79303-BZ190-	1		
1901 -	F65#				79303-BZ190-	1		
	+----------+							
	| 79304A | FRAME SUB-ASSY, NO.3 SEAT BACK, LH							
	+----------+							
1111 - 1312	F650..STD				79304-BZ010-	1		
1111 - 1312	F651				79304-BZ030-	1		
1111 - 1312	F650..LO				79304-BZ030-	1		
1312 - 1507	F650..STD				79304-BZ011-	1		
1312 - 1507	F651				79304-BZ080-	1		
1312 - 1507	F650..LO				79304-BZ080-	1		
1507 - 1607	F650..STD				79304-BZ090-	1		
1507 - 1901	F653				79304-BZ100-	1		
1507 - 1901	F650..LO				79304-BZ100-	1		
1901 -	F65#				79304-BZ100-	1		
	+----------+							
	| 79360 | SPRING ASSY, NO.3 SEAT CUSHION							
	+----------+							
1111 - 1312	F65#				79360-BZ020-	1		
1312 - 1505	F65#				79360-BZ040-	1		
				#	(79360-BZ041-)	1		

FIG.71-51 SEAT & SEAT TRACK

PROD_DATE	MODELS	SPEC CODE	DESCRIPTION	R/P	PART NUMBER	QYT	REV_REF FR	REV_REF TO
	+----------+							
	| 79360 | SPRING ASSY, NO.3 SEAT CUSHION							
	CONTINUED--+							
1506 - 1507	F65#				79360-BZ041-	1		
1507 - 1607	F650				79360-BZ070-	1		
	+----------+							
	| 79893 | CUSHION, FOLD SEAT LEG							
	+----------+							
1312 - 1507	F65#				79893-BZ010-	2		
1507 - 1607	F650				79893-BZ010-	2		
1604 - 1901	F653				79893-BZ020-	2		
1901 -	F65#				79893-BZ020-	2		
	+----------+							
	| 79952 | COVER, NO.2 SEAT CUSHION							
	+----------+							
1111 - 1507	F650..STD		DK.GRAY(TRIM1#)		79952-BZ040-B0	1		
1111 - 1507	F651		DK.GRAY(TRIM4#)		79952-BZ040-B0	1		
1111 - 1507	F650..LO		DK.GRAY(TRIM4#)		79952-BZ040-B0	1		
	+----------+							
	| 79959 | COVER, RR SEAT LEG							
	+----------+							
1111 - 1507	F651		DK.GRAY(TRIM4#)		79959-BZ030-B0	1		
1111 - 1507	F650..LO		DK.GRAY(TRIM4#)		79959-BZ030-B0	1		
1507 - 1901	F653		DK.GRAY(TRIM4#)		79959-BZ030-B0	1		
1901 -	F65#		DK.GRAY(TRIM4#)		79959-BZ030-B0	1		
	+----------+							
	| 79959B | COVER, REAR SEAT LEG, LH							
	+----------+							
1111 - 1507	F651		DK.GRAY(TRIM4#)		79959-BZ030-B0	1		
1111 - 1507	F650..LO		DK.GRAY(TRIM4#)		79959-BZ030-B0	1		
1507 - 1901	F653		DK.GRAY(TRIM4#)		79959-BZ030-B0	1		
1901 -	F65#		DK.GRAY(TRIM4#)		79959-BZ030-B0	1		
	+----------+							
	| C9938 | BUSH							
	+----------+							
1606 - 1712	F653		TYPE A(HOLE:13)		21552-BZ010-	2		

FIG.71-51 SEAT & SEAT TRACK

PROD_DATE	MODELS	SPEC CODE	DESCRIPTION	R/P	PART NUMBER	QYT	REV_REF FR	REV_REF TO
	+----------+ | C9938 | BUSH CONTINUED--+							
1712 - 1901	F653		TYPE B(HOLE:16.5)		21552-BZ020-	2		
1901 -	F65#		TYPE B(HOLE:16.5)		21552-BZ020-	2		

FIG. 71-52 SEAT BELT

(1111-)

FRONT SEAT

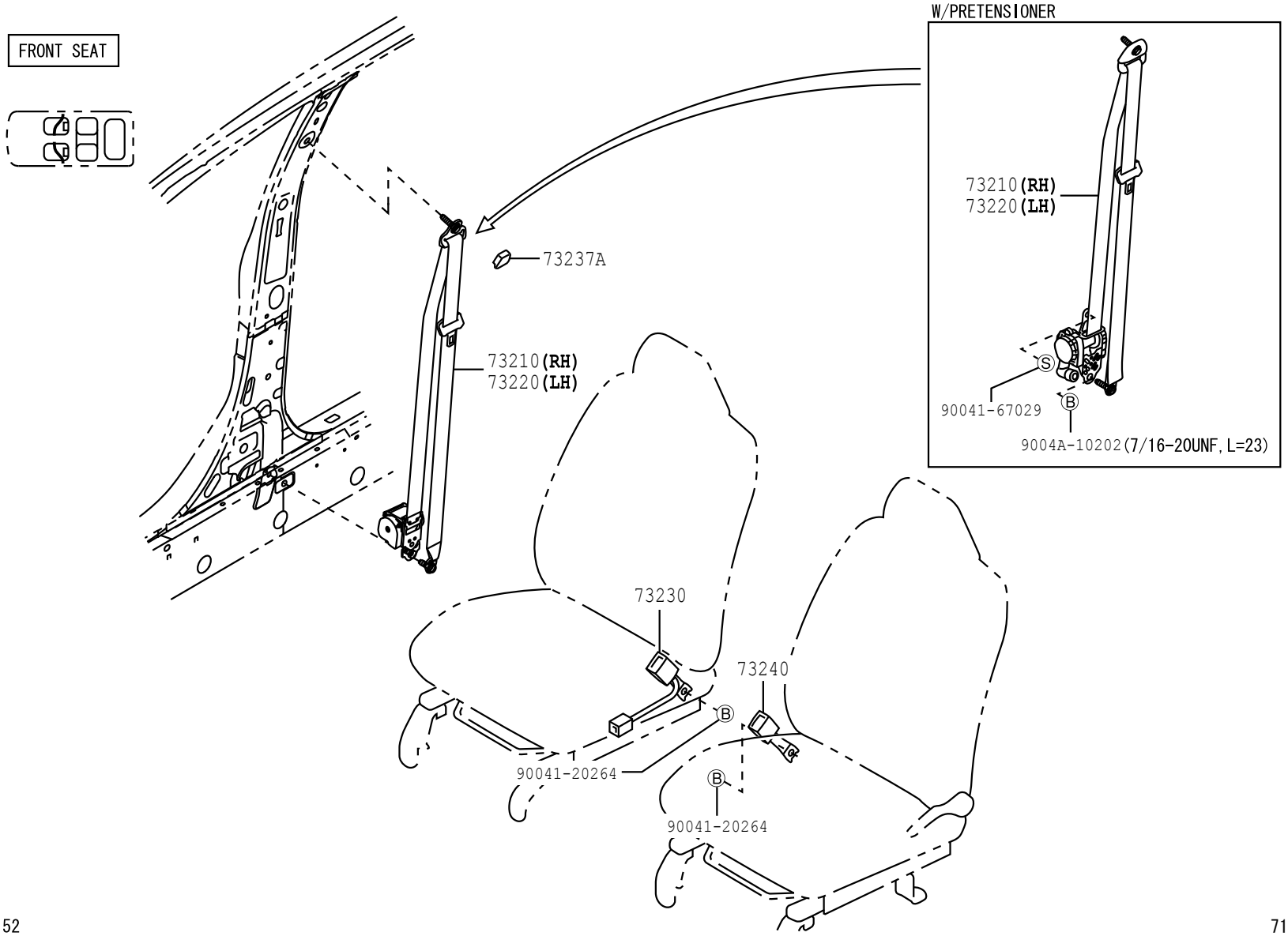

7152

717493-E

FIG.71-52 SEAT BELT

(1111-)

RR NO.1 SEAT

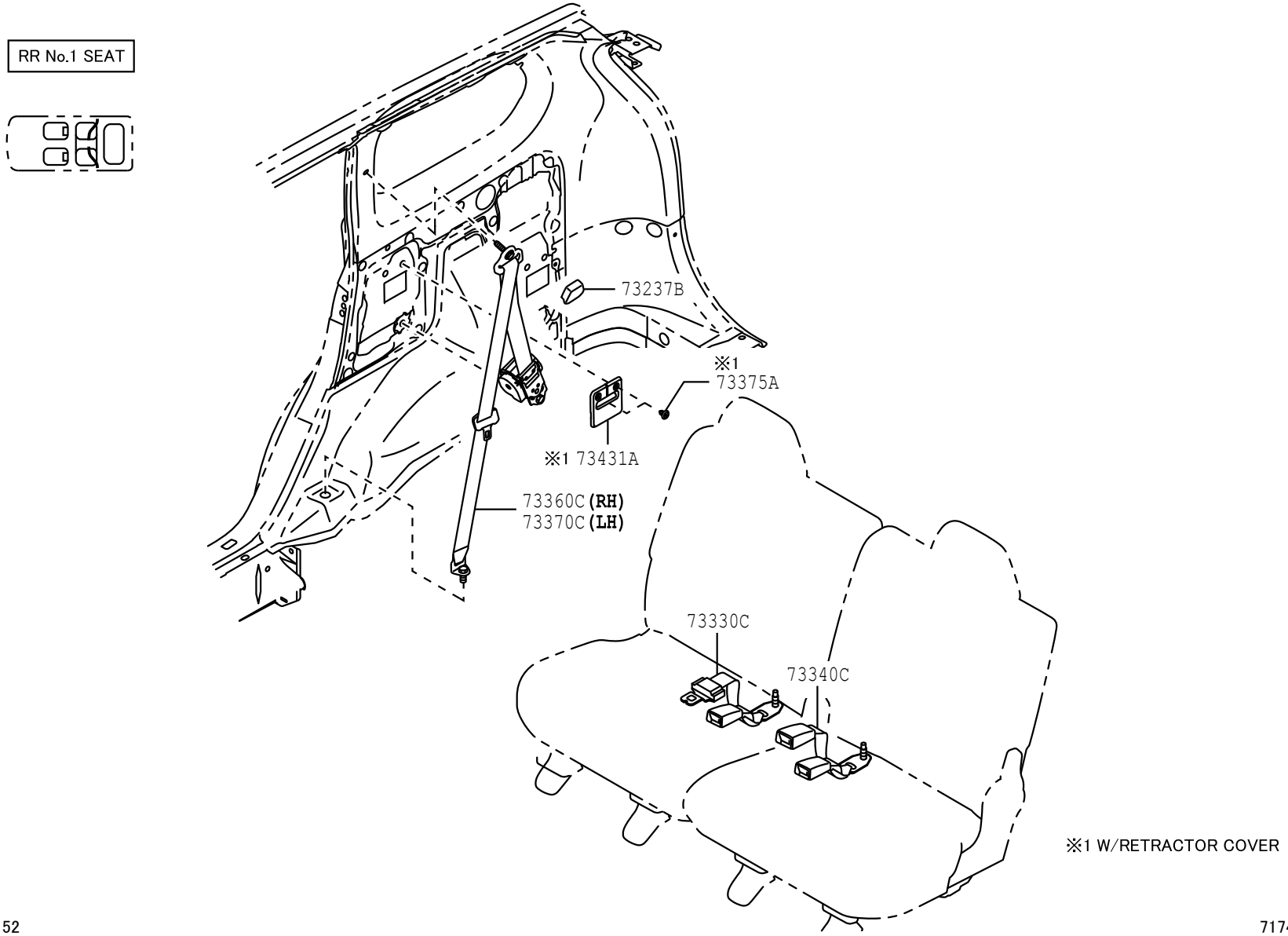

7152

717494-A

FIG. 71-52 SEAT BELT

(1111-)

RR NO. 2 SEAT

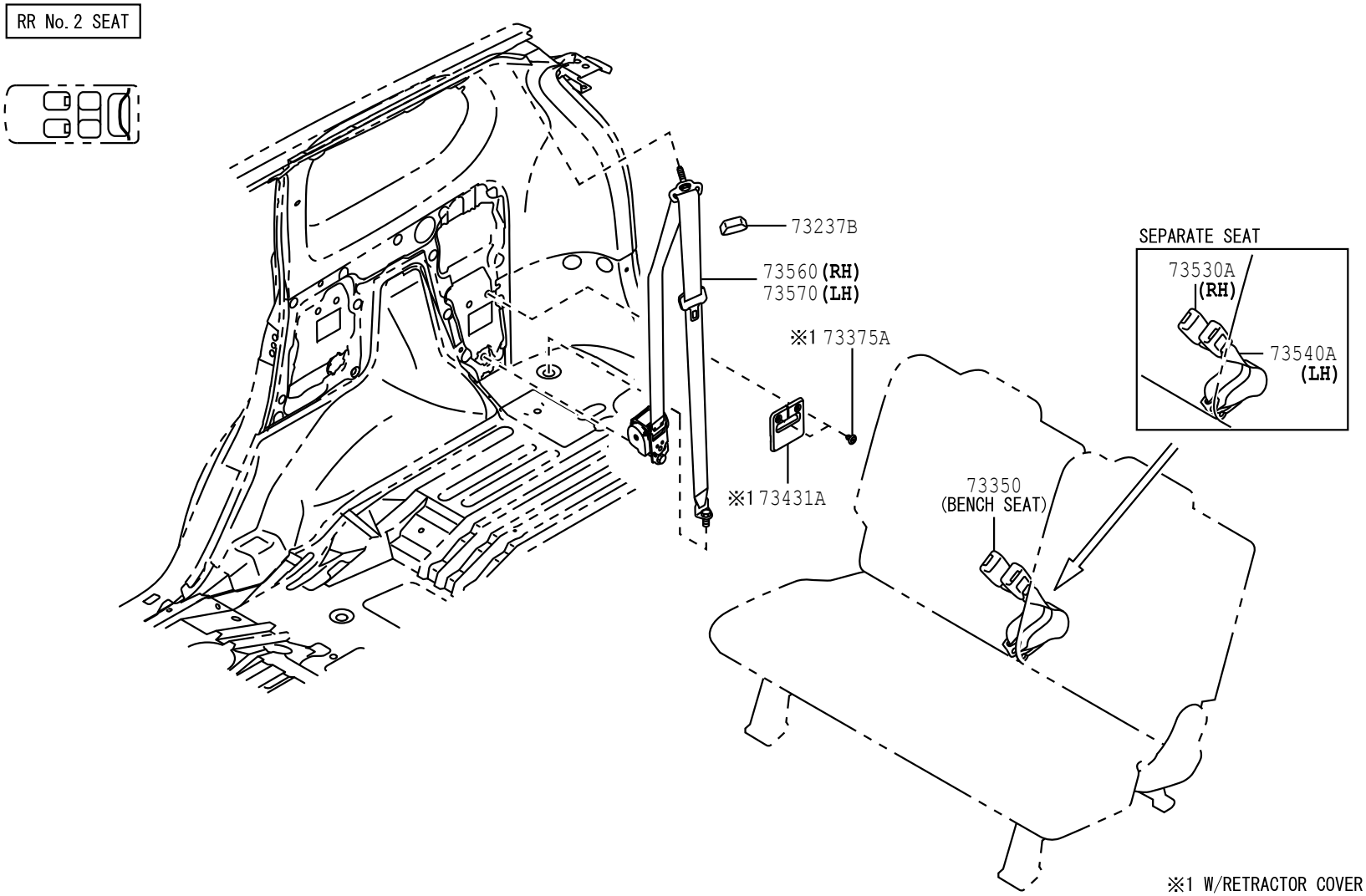

7152

717495-B

PROD_DATE	MODELS	SPEC CODE	DESCRIPTION	R/P	PART NUMBER	QYT	REV_REF FR	REV_REF TO
	+----------+							
	| 73210 | BELT ASSY, FRONT SEAT OUTER, RH							
	+----------+							
1111 - 1305	F650..STD		SHADOW GRAY(TRIM1#)		73210-BZ190-B0	1		
1111 - 1305	F651		GREGE(TRIM4#)		73210-BZ190-E0	1		
1111 - 1305	F650..LO		GREGE(TRIM4#)		73210-BZ190-E0	1		
1305 - 1507	F650..STD		LT.GRAY(TRIM1#)		73210-BZ361-B0	1		
1305 - 1507	F651		LT.GRAY(TRIM4#)		73210-BZ361-E0	1		
1305 - 1507	F650..LO		LT.GRAY(TRIM4#)		73210-BZ361-E0	1		
1507 - 1607	F650..STD		LT.GRAY(TRIM1#)		73210-BZ361-B0	1		
1507 - 1901	F653		LT.GRAY(TRIM4#)		73210-BZ361-B0	1		
1507 - 1901	F650..LO		LT.GRAY(TRIM4#)		73210-BZ361-B0	1		
1901 -	F65#		LT.GRAY(TRIM4#)		73210-BZ361-B0	1		
	+----------+							
	| 73220 | BELT ASSY, FRONT SEAT OUTER, LH							
	+----------+							
1111 - 1305	F650..STD		SHADOW GRAY(TRIM1#)		73220-BZ180-B0	1		
1111 - 1305	F651		GREGE(TRIM4#)		73220-BZ180-E0	1		
1111 - 1305	F650..LO		GREGE(TRIM4#)		73220-BZ180-E0	1		
1305 - 1507	F650..STD		LT.GRAY(TRIM1#)		73220-BZ341-B0	1		
1305 - 1507	F651		LT.GRAY(TRIM4#)		73220-BZ341-E0	1		
1305 - 1507	F650..LO		LT.GRAY(TRIM4#)		73220-BZ341-E0	1		
1507 - 1607	F650..STD		LT.GRAY(TRIM1#)		73220-BZ341-B0	1		
1507 - 1901	F653		LT.GRAY(TRIM4#)		73220-BZ341-B0	1		
1507 - 1901	F650..LO		LT.GRAY(TRIM4#)		73220-BZ341-B0	1		
1901 -	F65#		LT.GRAY(TRIM4#)		73220-BZ341-B0	1		
	+----------+							
	| 73230 | BELT ASSY, FRONT SEAT INNER, RH							
	+----------+							
1111 - 1305	F650..STD		DK.GRAY(TRIM1#)		73230-BZ440-B0	1		
1111 - 1305	F651		-(TRIM4#)		73230-BZ440-E0	1		
1111 - 1305	F650..LO		-(TRIM4#)		73230-BZ440-E0	1		

FIG.71-52 SEAT BELT

PROD_DATE	MODELS	SPEC CODE	DESCRIPTION	R/P	PART NUMBER	QYT	REV_REF FR	REV_REF TO
	+----------+							
	| 73230 | BELT ASSY, FRONT SEAT INNER, RH							
	CONTINUED--+							
1305 - 1507	F650..STD		DK.GRAY(TRIM1#)		73230-BZ471-B0	1		
1305 - 1507	F651		BEIGE(TRIM4#)		73230-BZ471-E0	1		
1305 - 1507	F650..LO		BEIGE(TRIM4#)		73230-BZ471-E0	1		
1507 - 1607	F650..STD		DK.GRAY(TRIM1#)		73230-BZ471-B0	1		
1507 - 1901	F653		DK.GRAY(TRIM4#)		73230-BZ471-B0	1		
1507 - 1901	F650..LO		DK.GRAY(TRIM4#)		73230-BZ471-B0	1		
1901 -	F65#		DK.GRAY(TRIM4#)		73230-BZ471-B0	1		
	+----------+							
	| 73237A | COVER, SHOULDER BELT ANCHOR							
	+----------+							
1111 - 1305	F650..STD		LT.GRAY(TRIM1#)		73237-BZ010-B2	2		
1111 - 1305	F651		LT.GRAY(TRIM4#)		73237-BZ010-B2	2		
1111 - 1305	F650..LO		LT.GRAY(TRIM4#)		73237-BZ010-B2	2		
	+----------+							
	| 73237B | COVER, SHOULDER BELT ANCHOR							
	+----------+							
1111 - 1507	F650..STD		LT.GRAY(TRIM1#)		73237-BZ010-B2	2		
1111 - 1507	F651		LT.GRAY(TRIM4#)		73237-BZ010-B2	2		
1111 - 1507	F650..LO		LT.GRAY(TRIM4#)		73237-BZ010-B2	2		
1507 - 1607	F650..STD		LT.GRAY(TRIM1#)		73237-BZ010-B2	2		
1507 - 1901	F653		LT.GRAY(TRIM4#)		73237-BZ010-B2	2		
1507 - 1901	F650..LO		LT.GRAY(TRIM4#)		73237-BZ010-B2	2		
1901 -	F65#		LT.GRAY(TRIM4#)		73237-BZ010-B2	2		
	+----------+							
	| 73240 | BELT ASSY, FRONT SEAT INNER, LH							
	+----------+							
1111 - 1305	F650..STD		DK.GRAY(TRIM1#)		73230-BZ440-B0	1		
1111 - 1305	F651		-(TRIM4#)		73230-BZ440-E0	1		
1111 - 1305	F650..LO		-(TRIM4#)		73230-BZ440-E0	1		
1305 - 1507	F650..STD		DK.GRAY(TRIM1#)		73230-BZ461-B0	1		

PROD_DATE	MODELS	SPEC CODE	DESCRIPTION	R/P	PART NUMBER	QYT	REV_REF FR	REV_REF TO
	+----------+							
	| 73240 | BELT ASSY, FRONT SEAT INNER, LH							
	CONTINUED--+							
1305 - 1507	F651		BEIGE(TRIM4#)		73230-BZ461-E0	1		
1305 - 1507	F650..LO		BEIGE(TRIM4#)		73230-BZ461-E0	1		
1507 - 1607	F650..STD		DK.GRAY(TRIM1#)		73230-BZ461-B0	1		
1507 - 1901	F653		DK.GRAY(TRIM4#)		73230-BZ461-B0	1		
1507 - 1901	F650..LO		DK.GRAY(TRIM4#)		73230-BZ461-B0	1		
1901 -	F65#		DK.GRAY(TRIM4#)		73230-BZ461-B0	1		
	+----------+							
	| 73330C | BELT ASSY, REAR SEAT LAP TYPE, CENTER RH							
	+----------+							
1111 - 1307	F650..STD		SHADOW GRAY(TRIM1#)		73330-BZ170-B0	1		
1111 - 1307	F651		GREGE(TRIM4#)		73330-BZ170-E0	1		
1111 - 1307	F650..LO		GREGE(TRIM4#)		73330-BZ170-E0	1		
1307 - 1507	F650..STD		SHADOW GRAY(TRIM1#)		73330-BZ171-B0	1		
1307 - 1507	F651		BEIGE(TRIM4#)		73330-BZ171-E0	1		
1307 - 1507	F650..LO		BEIGE(TRIM4#)		73330-BZ171-E0	1		
1507 - 1607	F650..STD		SHADOW GRAY(TRIM1#)		73330-BZ171-B0	1		
1507 - 1901	F653		SHADOW GRAY(TRIM4#)		73330-BZ171-B0	1		
1507 - 1901	F650..LO		SHADOW GRAY(TRIM4#)		73330-BZ171-B0	1		
1901 -	F65#		SHADOW GRAY(TRIM4#)		73330-BZ171-B0	1		
	+----------+							
	| 73340C | BELT ASSY, REAR SEAT LAP TYPE, CENTER LH							
	+----------+							
1111 - 1307	F650..STD		SHADOW GRAY(TRIM1#)		73340-BZ150-B0	1		
1111 - 1307	F651		GREGE(TRIM4#)		73340-BZ150-E0	1		
1111 - 1307	F650..LO		GREGE(TRIM4#)		73340-BZ150-E0	1		
1307 - 1507	F650..STD		SHADOW GRAY(TRIM1#)		73340-BZ151-B0	1		
1307 - 1507	F651		BEIGE(TRIM4#)		73340-BZ151-E0	1		
1307 - 1507	F650..LO		BEIGE(TRIM4#)		73340-BZ151-E0	1		
1507 - 1607	F650..STD		SHADOW GRAY(TRIM1#)		73340-BZ151-B0	1		

FIG.71-52 SEAT BELT

PROD_DATE	MODELS	SPEC CODE	DESCRIPTION	R/P	PART NUMBER	QYT	REV_REF FR	REV_REF TO
	+----------+							
	| 73340C | BELT ASSY, REAR SEAT LAP TYPE, CENTER LH							
	CONTINUED--+							
1507 - 1901	F653		SHADOW GRAY(TRIM4#)		73340-BZ151-B0	1		
1507 - 1901	F650..LO		SHADOW GRAY(TRIM4#)		73340-BZ151-B0	1		
1901 -	F65#		SHADOW GRAY(TRIM4#)		73340-BZ151-B0	1		
	+----------+							
	| 73350 | BELT ASSY, REAR SEAT LAP TYPE, CENTER							
	+----------+							
1111 - 1307	F651		GREGE(TRIM4#)		73060-BZ040-E1	1		
1111 - 1307	F650..LO		GREGE(TRIM4#)		73060-BZ040-E1	1		
1307 - 1507	F651		BEIGE(TRIM4#)		73060-BZ060-E0	1		
1307 - 1507	F650..LO		BEIGE(TRIM4#)		73060-BZ060-E0	1		
1507 - 1607	F650..LO		SHADOW GRAY(TRIM4#)		73060-BZ060-B0	1		
	+----------+							
	| 73360C | BELT ASSY, REAR NO.1 SEAT, OUTER RH							
	+----------+							
1111 - 1307	F650..STD		SHADOW GRAY(TRIM1#)		73360-BZ210-B0	1		
1111 - 1307	F651		GREGE(TRIM4#)		73360-BZ210-E0	1		
1111 - 1307	F650..LO		GREGE(TRIM4#)		73360-BZ210-E0	1		
1307 - 1507	F650..STD		LT.GRAY(TRIM1#)		73360-BZ270-B0	1		
1307 - 1507	F651		GREGE(TRIM4#)		73360-BZ270-E0	1		
1307 - 1507	F650..LO		GREGE(TRIM4#)		73360-BZ270-E0	1		
1507 - 1607	F650..STD		LT.GRAY(TRIM1#)		73360-BZ270-B0	1		
1507 - 1901	F653		LT.GRAY(TRIM4#)		73360-BZ270-B0	1		
1507 - 1901	F650..LO		LT.GRAY(TRIM4#)		73360-BZ270-B0	1		
1901 -	F65#		LT.GRAY(TRIM4#)		73360-BZ270-B0	1		
	+----------+							
	| 73370C | BELT ASSY, REAR NO.1 SEAT, OUTER LH							
	+----------+							
1111 - 1307	F650..STD		SHADOW GRAY(TRIM1#)		73370-BZ210-B0	1		
1111 - 1307	F651		GREGE(TRIM4#)		73370-BZ210-E0	1		
1111 - 1307	F650..LO		GREGE(TRIM4#)		73370-BZ210-E0	1		

PROD_DATE	MODELS	SPEC CODE	DESCRIPTION	R/P	PART NUMBER	QYT	REV_REF FR	REV_REF TO
	+----------+							
	| 73370C | BELT ASSY, REAR NO.1 SEAT, OUTER LH							
	CONTINUED--+							
1307 - 1507	F650..STD		LT.GRAY(TRIM1#)		73370-BZ270-B0	1		
1307 - 1507	F651		GREGE(TRIM4#)		73370-BZ270-E0	1		
1307 - 1507	F650..LO		GREGE(TRIM4#)		73370-BZ270-E0	1		
1507 - 1607	F650..STD		LT.GRAY(TRIM1#)		73370-BZ270-B0	1		
1507 - 1901	F653		LT.GRAY(TRIM4#)		73370-BZ270-B0	1		
1507 - 1901	F650..LO		LT.GRAY(TRIM4#)		73370-BZ270-B0	1		
1901 -	F65#		LT.GRAY(TRIM4#)		73370-BZ270-B0	1		
	+----------+							
	| 73375A | CLIP, REAR SEAT BELT COVER							
	+----------+							
1111 - 1507	F650..STD		DK.GRAY(TRIM1#)		90467-05063-B5	4		
				#	(90467-05063-C4)	1		
1111 - 1507	F650..LO		-(TRIM4#)		90467-05063-E6	4		
1111 - 1507	F651..STD		-(TRIM4#)		90467-05063-E6	4		
1507 - 1607	F650..STD		DK.GRAY(TRIM1#)		90467-05063-B5	4		
				#	(90467-05063-C4)	1		
1507 - 1704	F65#..LO		DK.GRAY(TRIM4#)		90467-05063-B5	4		
				#	(90467-05063-C4)	1		
1704 - 1901	F653..LO		BLACK(TRIM4#)		90467-05063-C4	4		
1901 -	F653..LO		LT.GRAY(TRIM4#)		90467-05063-P5	4		
	+----------+							
	| 73431A | COVER, REAR SEAT BELT RETRACTOR							
	+----------+							
1111 - 1507	F650..STD		DK.GRAY(TRIM1#)		73431-28010-B1	2		
1111 - 1507	F650..LO		-(TRIM4#)		73431-28010-E1	2		
1111 - 1507	F651..STD		-(TRIM4#)		73431-28010-E1	2		
1507 - 1602	F650..STD		DK.GRAY(TRIM1#)		73431-28010-B1	2		
1507 - 1602	F65#..LO		DK.GRAY(TRIM4#)		73431-28010-B1	2		
1602 - 1607	F650..STD		DK.GRAY(TRIM1#)		73431-BZ010-B0	2		
1602 - 1901	F65#..LO		DK.GRAY(TRIM4#)		73431-BZ010-B0	2		

FIG.71-52 SEAT BELT

PROD_DATE	MODELS	SPEC CODE	DESCRIPTION	R/P	PART NUMBER	QYT	REV_REF FR	REV_REF TO
	+----------+							
	| 73431A | COVER, REAR SEAT BELT RETRACTOR							
	CONTINUED--+							
1901 -	F653..LO		LINEN BEIGE(TRIM4#)		73431-BZ010-E1	2		
1904 -	F653..LO		DK.GRAY(TRIM40)		73431-BZ010-B0	2		
1904 -	F653..LO		LINEN BEIGE(TRIM40)		73431-BZ010-E1	2		
	+----------+							
	| 73530A | BELT ASSY, REAR NO.2 SEAT LAP TYPE, RH							
	+----------+							
1507 - 1901	F653		SHADOW GRAY(TRIM4#)		73060-BZ070-B0	1		
1901 -	F65#		SHADOW GRAY(TRIM4#)		73060-BZ070-B0	1		
	+----------+							
	| 73540A | BELT ASSY, REAR NO.2 SEAT LAP TYPE, LH							
	+----------+							
1507 - 1901	F653		SHADOW GRAY(TRIM4#)		73060-BZ070-B0	1		
1901 -	F65#		SHADOW GRAY(TRIM4#)		73060-BZ070-B0	1		
	+----------+							
	| 73560 | BELT ASSY, REAR NO.2 SEAT, OUTER RH							
	+----------+							
1111 - 1307	F651		GREGE(TRIM4#)		73560-BZ080-E0	1		
1111 - 1307	F650..LO		GREGE(TRIM4#)		73560-BZ080-E0	1		
1307 - 1507	F651		GREGE(TRIM4#)		73560-BZ100-E0	1		
1307 - 1507	F650..LO		GREGE(TRIM4#)		73560-BZ100-E0	1		
1507 - 1901	F653		LT.GRAY(TRIM4#)		73560-BZ100-B0	1		
1507 - 1901	F650..LO		LT.GRAY(TRIM4#)		73560-BZ100-B0	1		
1901 -	F65#		LT.GRAY(TRIM4#)		73560-BZ100-B0	1		
	+----------+							
	| 73570 | BELT ASSY, REAR NO.2 SEAT, OUTER LH							
	+----------+							
1111 - 1307	F651		GREGE(TRIM4#)		73570-BZ080-E0	1		
1111 - 1307	F650..LO		GREGE(TRIM4#)		73570-BZ080-E0	1		
1307 - 1507	F651		GREGE(TRIM4#)		73570-BZ100-E0	1		
1307 - 1507	F650..LO		GREGE(TRIM4#)		73570-BZ100-E0	1		
1507 - 1901	F653		LT.GRAY(TRIM4#)		73570-BZ100-B0	1		
1507 - 1901	F650..LO		LT.GRAY(TRIM4#)		73570-BZ100-B0	1		

FIG.71-52 SEAT BELT

PROD_DATE	MODELS	SPEC CODE	DESCRIPTION	R/P	PART NUMBER	QYT	REV_REF	
							FR	TO
	+----------+ | 73570 | BELT ASSY, REAR NO.2 SEAT, OUTER LH CONTINUED--+							
1901 -	F65#		LT.GRAY(TRIM4#)		73570-BZ100-B0	1		

(1111-)

ARMREST

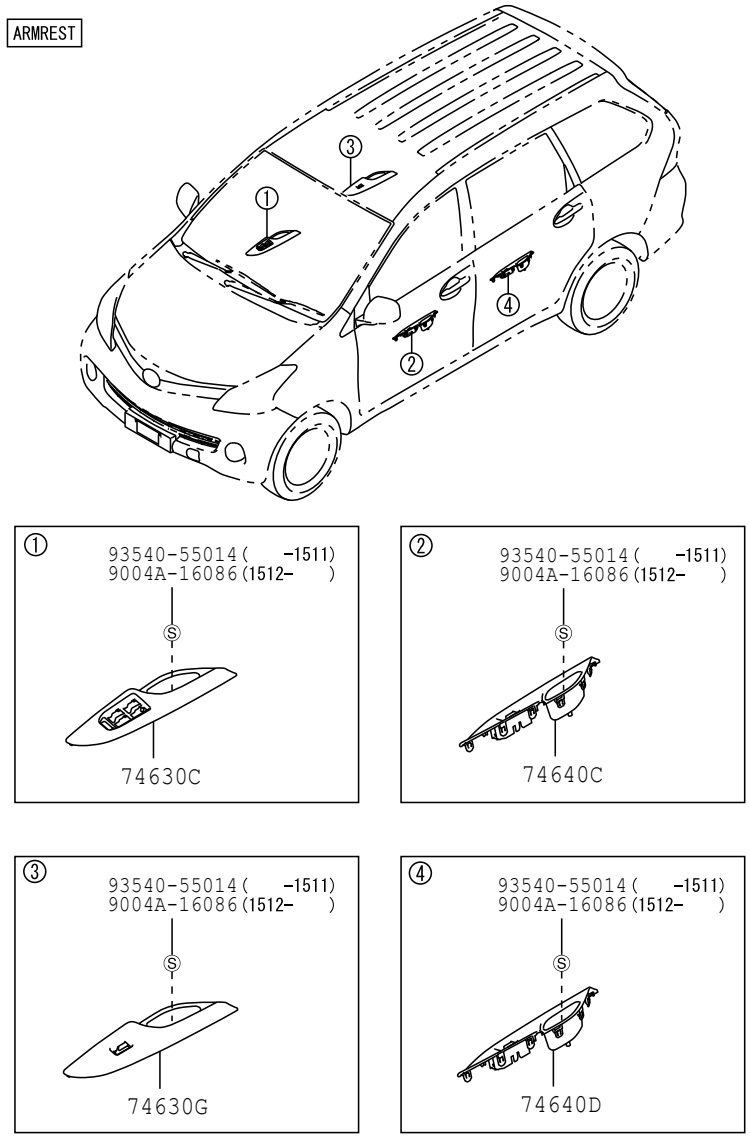

(1111-)

VISOR & ASSIST GRIP

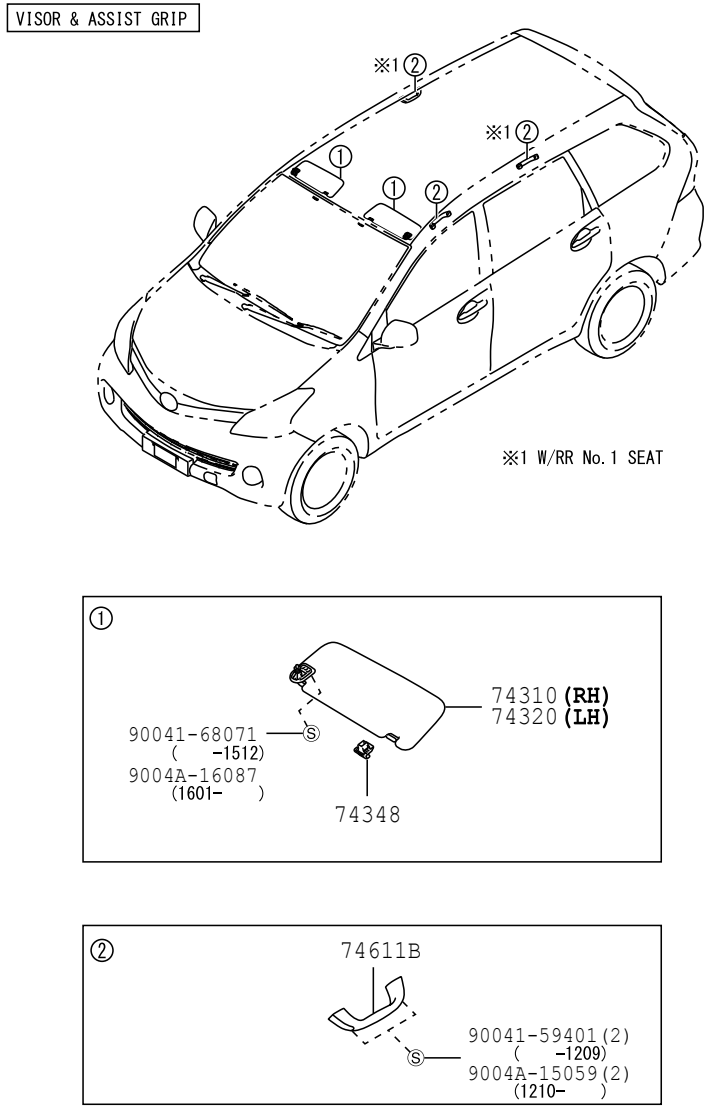

PROD_DATE	MODELS	SPEC CODE	DESCRIPTION	R/P	PART NUMBER	QYT	REV_REF FR	REV_REF TO
	+----------+							
	| 74310 | VISOR ASSY,							
	+----------+ RH							
1111 - 1305	F650..STD		LT.GRAY(TRIM1#),L/CAUTION LABEL		74310-BZ510-B0	1		
1111 - 1305	F651		LT.GRAY(TRIM4#),L/CAUTION LABEL		74310-BZ510-B0	1		
1111 - 1305	F650..LO		LT.GRAY(TRIM4#),L/CAUTION LABEL		74310-BZ510-B0	1		
1305 - 1507	F650..STD		LT.GRAY(TRIM1#),W/CAUTION LABEL		74310-BZ740-B0	1		
1305 - 1507	F651		LT.GRAY(TRIM4#),W/CAUTION LABEL		74310-BZ740-B0	1		
1305 - 1507	F650..LO		LT.GRAY(TRIM4#),W/CAUTION LABEL		74310-BZ740-B0	1		
1507 - 1607	F650..STD		LT.GRAY(TRIM1#)		74310-BZ510-B0	1		
1507 - 1901	F653		LT.GRAY(TRIM4#)		74310-BZ510-B0	1		
1507 - 1901	F650..LO		LT.GRAY(TRIM4#)		74310-BZ510-B0	1		
1901 -	F65#		LT.GRAY(TRIM4#)		74310-BZ510-B0	1		
	+----------+							
	| 74320 | VISOR ASSY,							
	+----------+ LH							
1111 - 1305	F650..STD		LT.GRAY(TRIM1#),L/CAUTION LABEL		74320-BZ410-B0	1		
1111 - 1305	F650..LO		LT.GRAY(TRIM4#),L/CAUTION LABEL		74320-BZ410-B0	1		
1111 - 1305	F651..STD		LT.GRAY(TRIM4#),L/CAUTION LABEL		74320-BZ410-B0	1		
1111 - 1507	F651..LO		LT.GRAY(TRIM4#)		74320-BZ420-B0	1		
1305 - 1507	F650..STD		LT.GRAY(TRIM1#)		74320-BZ410-B0	1		
1305 - 1507	F650..LO		LT.GRAY(TRIM4#)		74320-BZ410-B0	1		
1305 - 1507	F651..STD		LT.GRAY(TRIM4#)		74320-BZ410-B0	1		
1507 - 1607	F650..STD		LT.GRAY(TRIM1#)		74320-BZ690-B0	1		
1507 - 1901	F65#..LO		LT.GRAY(TRIM4#)		74320-BZ690-B0	1		
1507 - 1901	F653..STD		LT.GRAY(TRIM4#)		74320-BZ700-B0	1		

FIG.74-51 ARMREST & VISOR

PROD_DATE	MODELS	SPEC CODE	DESCRIPTION	R/P	PART NUMBER	QYT	REV_REF FR	REV_REF TO
	+----------+							
	| 74320 | VISOR ASSY,							
	CONTINUED--+ LH							
1901 -	F653..LO		LT.GRAY(TRIM4#)		74320-BZ690-B0	1		
1901 -	F65#..STD		LT.GRAY(TRIM4#)		74320-BZ700-B0	1		
	+----------+							
	| 74348 | HOLDER, VISO							
	+----------+ R							
1111 - 1507	F650..STD		LT.GRAY(TRIM1#)		74348-BZ060-B1	2		
1111 - 1507	F651		LT.GRAY(TRIM4#)		74348-BZ060-B1	2		
1111 - 1507	F650..LO		LT.GRAY(TRIM4#)		74348-BZ060-B1	2		
1507 - 1607	F650..STD		LT.GRAY(TRIM1#)		74348-BZ060-B1	2		
1507 - 1901	F653		LT.GRAY(TRIM4#)		74348-BZ060-B1	2		
1507 - 1901	F650..LO		LT.GRAY(TRIM4#)		74348-BZ060-B1	2		
1901 -	F65#		LT.GRAY(TRIM4#)		74348-BZ060-B1	2		
	+----------+							
	| 74611B | GRIP, ASSIST							
	+----------+							
1111 - 1507	F650..STD		LT.GRAY(TRIM1#)		74611-BZ060-B1	1		
1111 - 1507	F651		LT.GRAY(TRIM4#)		74611-BZ060-B1	3		
1111 - 1507	F650..LO		LT.GRAY(TRIM4#)		74611-BZ060-B1	3		
1507 - 1607	F650..STD		LT.GRAY(TRIM1#)		74611-BZ060-B1	1		
1507 - 1901	F653		LT.GRAY(TRIM4#)		74611-BZ060-B1	3		
1507 - 1901	F650..LO		LT.GRAY(TRIM4#)		74611-BZ060-B1	3		
1901 -	F65#		LT.GRAY(TRIM4#)		74611-BZ060-B1	3		
	+----------+							
	| 74630C | GRIP ASSY, DOOR ASSIST, RH							
	+----------+							
1111 - 1305	F651		BLACK(TRIM4#)		74641-BZ090-C0	1		
1111 - 1305	F650..LO		BLACK(TRIM4#)		74641-BZ090-C0	1		
1111 - 1507	F650..STD		BLACK(TRIM1#)		74641-BZ090-C0	1		
1305 - 1507	F651		SILVER(TRIM4#)		74641-BZ100-B0	1		
1305 - 1507	F650..LO		SILVER(TRIM4#)		74641-BZ100-B0	1		

PROD_DATE	MODELS	SPEC CODE	DESCRIPTION	R/P	PART NUMBER	QYT	REV_REF FR	REV_REF TO
	+----------+							
	| 74630C | GRIP ASSY, DOOR ASSIST, RH							
	CONTINUED--+							
1507 - 1607	F650..STD		BLACK(TRIM1#)		74641-BZ140-C1	1		
1507 - 1901	F65#..LO		BLACK(TRIM4#)		74641-BZ140-C1	1		
1507 - 1901	F653..STD		SILVER(TRIM4#)		74641-BZ160-B1	1		
1901 -	F653..LO		BLACK(TRIM4#)		74641-BZ140-C1	1		
1901 -	F65#..STD		SILVER(TRIM4#)		74641-BZ160-B1	1		
	+----------+							
	| 74630G | GRIP ASSY, REAR DOOR ASSIST RH							
	+----------+							
1111 - 1305	F651		BLACK(TRIM4#)		74641-BZ110-C0	1		
1111 - 1305	F650..LO		BLACK(TRIM4#)		74641-BZ110-C0	1		
1111 - 1507	F650..STD		BLACK(TRIM1#)		74641-BZ110-C0	1		
1305 - 1507	F651		SILVER(TRIM4#)		74641-BZ120-B0	1		
1305 - 1507	F650..LO		SILVER(TRIM4#)		74641-BZ120-B0	1		
1507 - 1607	F650..STD		BLACK(TRIM1#)		74641-BZ150-C1	1		
1507 - 1901	F65#..LO		BLACK(TRIM4#)		74641-BZ150-C1	1		
1507 - 1901	F653..STD		SILVER(TRIM4#)		74641-BZ170-B1	1		
1901 -	F653..LO		BLACK(TRIM4#)		74641-BZ150-C1	1		
1901 -	F65#..STD		SILVER(TRIM4#)		74641-BZ170-B1	1		
	+----------+							
	| 74640C | GRIP ASSY, DOOR ASSIST, LH							
	+----------+							
1111 - 1305	F651		BLACK(TRIM4#)		74642-BZ090-C0	1		
1111 - 1305	F650..LO		BLACK(TRIM4#)		74642-BZ090-C0	1		
1111 - 1507	F650..STD		BLACK(TRIM1#)		74642-BZ090-C0	1		
1305 - 1507	F651		SILVER(TRIM4#)		74642-BZ100-B0	1		
1305 - 1507	F650..LO		SILVER(TRIM4#)		74642-BZ100-B0	1		
1507 - 1607	F650..STD		BLACK(TRIM1#)		74642-BZ140-C1	1		
1507 - 1901	F65#..LO		BLACK(TRIM4#)		74642-BZ140-C1	1		
1507 - 1901	F653..STD		SILVER(TRIM4#)		74642-BZ150-B1	1		

FIG.74-51 ARMREST & VISOR

PROD_DATE	MODELS	SPEC CODE	DESCRIPTION	R/P	PART NUMBER	QYT	REV_REF FR	REV_REF TO
	+----------+							
	| 74640C | GRIP ASSY, DOOR ASSIST, LH							
	CONTINUED--+							
1901 -	F653..LO		BLACK(TRIM4#)		74642-BZ140-C1	1		
1901 -	F65#..STD		SILVER(TRIM4#)		74642-BZ150-B1	1		
	+----------+							
	| 74640D | GRIP ASSY, REAR DOOR ASSIST LH							
	+----------+							
1111 - 1305	F651		BLACK(TRIM4#)		74642-BZ090-C0	1		
1111 - 1305	F650..LO		BLACK(TRIM4#)		74642-BZ090-C0	1		
1111 - 1507	F650..STD		BLACK(TRIM1#)		74642-BZ090-C0	1		
1305 - 1507	F651		SILVER(TRIM4#)		74642-BZ100-B0	1		
1305 - 1507	F650..LO		SILVER(TRIM4#)		74642-BZ100-B0	1		
1507 - 1607	F650..STD		BLACK(TRIM1#)		74642-BZ140-C1	1		
1507 - 1901	F65#..LO		BLACK(TRIM4#)		74642-BZ140-C1	1		
1507 - 1901	F653..STD		SILVER(TRIM4#)		74642-BZ150-B1	1		
1901 -	F653..LO		BLACK(TRIM4#)		74642-BZ140-C1	1		
1901 -	F65#..STD		SILVER(TRIM4#)		74642-BZ150-B1	1		

FIG. 74-54 BATTERY CARRIER

(1111-1507)

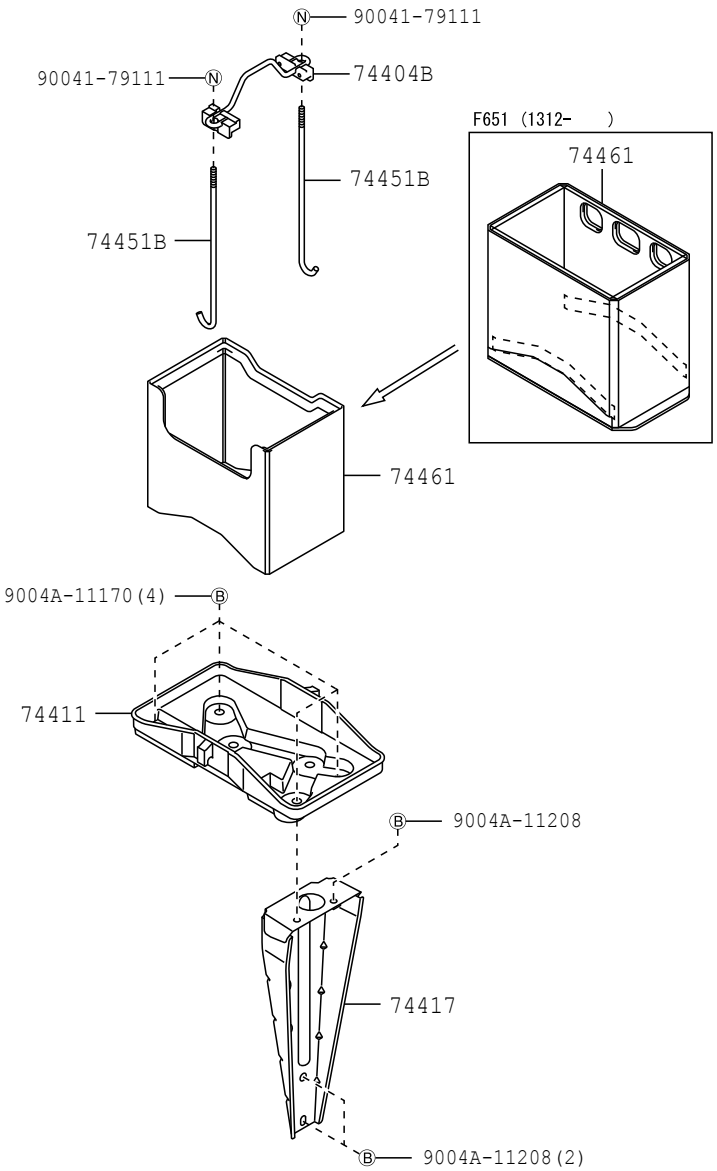

7454

743801

FIG. 74-54 BATTERY CARRIER

(1507-)

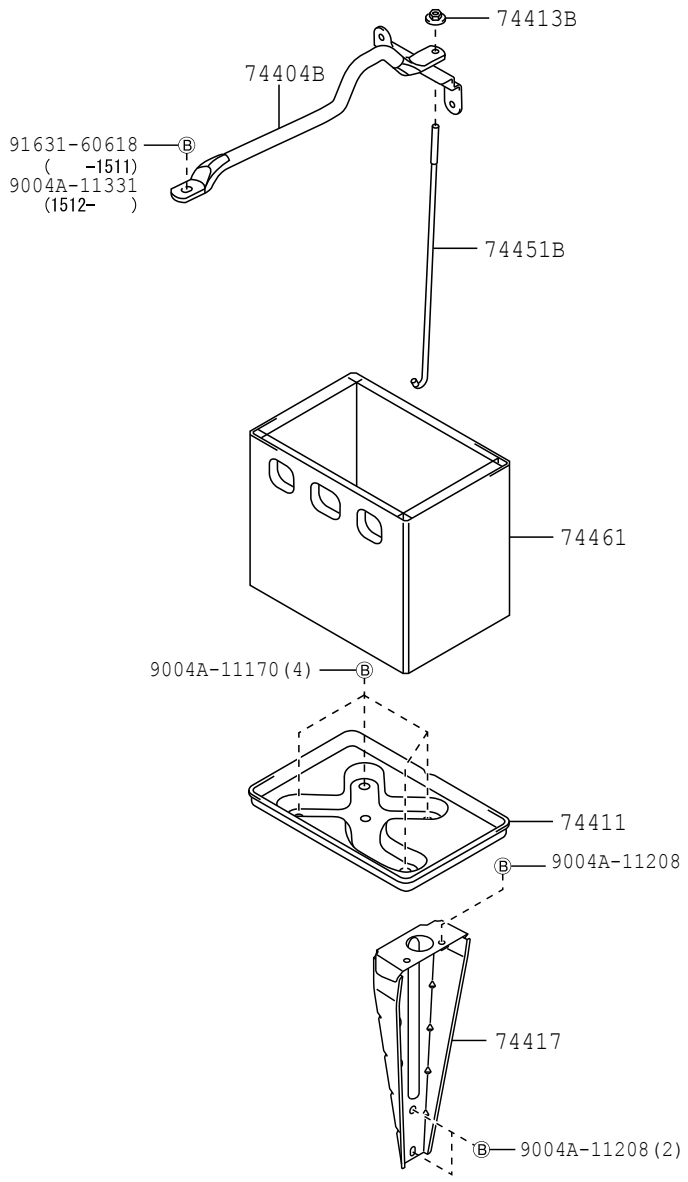

7454

744148-B

PROD_DATE	MODELS	SPEC CODE	DESCRIPTION	R/P	PART NUMBER	QYT	REV_REF FR	REV_REF TO
	+----------+							
	| 74404B | CLAMP SUB-ASSY, BATTERY							
	+----------+							
1111 - 1507	F65#				74404-BZ010-	1		
1507 - 1607	F650				74404-BZ100-	1		
1507 - 1901	F653				74404-BZ100-	1		
1901 -	F65#				74404-BZ100-	1		
	+----------+							
	| 74411 | CARRIER, BATTERY							
	+----------+							
1111 - 1507	F65#				74411-BZ010-	1		
1507 - 1607	F650				74411-BZ090-	1		
1507 - 1901	F653				74411-BZ090-	1		
1901 -	F65#				74411-BZ090-	1		
	+----------+							
	| 74413B | NUT, WING (FOR BATTERY CLAMP BOLT)							
	+----------+							
1507 - 1607	F650				90041-79111-	1		
1507 - 1901	F653				90041-79111-	1		
1901 -	F65#				90041-79111-	1		
	+----------+							
	| 74417 | BRACKET, BATTERY CARRIER							
	+----------+							
1111 - 1507	F65#				74417-BZ070-	1		
1507 - 1607	F650				74417-BZ070-	1		
1507 - 1901	F653				74417-BZ070-	1		
1901 -	F65#				74417-BZ070-	1		
	+----------+							
	| 74451B | BOLT, BATTERY CLAMP							
	+----------+							
1111 - 1507	F65#				74451-87Z07-	2		
1507 - 1607	F650				74451-BZ070-	1		
1507 - 1901	F653				74451-BZ070-	1		
1901 -	F65#				74451-BZ070-	1		

FIG.74-54 BATTERY CARRIER

PROD_DATE	MODELS	SPEC CODE	DESCRIPTION	R/P	PART NUMBER	QYT	REV_REF FR	REV_REF TO
	+----------+							
	| 74461 | COVER, BATTE							
	+----------+ RY							
1111 - 1211	F65#				74405-B1010-	1		
1212 - 1312	F651				74405-BZ020-	1		
1212 - 1507	F650				74405-BZ020-	1		
1312 - 1507	F651				74405-BZ030-	1		
1507 - 1607	F650				74405-BZ080-	1		
1507 - 1901	F653				74405-BZ080-	1		
1901 -	F65#				74405-BZ080-	1		

FIG. 74-55 CAUTION PLATE

(1111-)

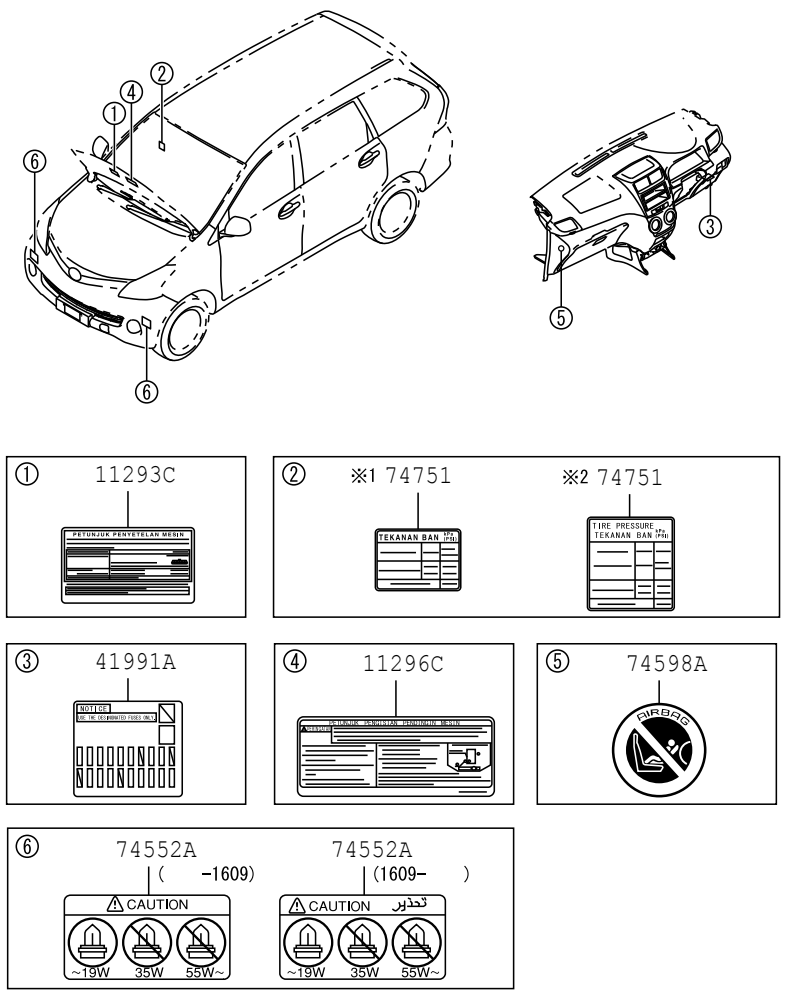

※1 F650
※2 F651, F653

7455

743241-C

FIG. 74-55 CAUTION PLATE

PROD_DATE	MODELS	SPEC CODE	DESCRIPTION	R/P	PART NUMBER	QYT	REV_REF FR	REV_REF TO
	11293C		LABEL, TUNE-UP SPECIFICATION INFORMATION					
1111 - 1507	EJVE..F650				11293-BZ010-	1		
1111 - 1507	K3VE..F651				11293-BZ030-	1		
1507 - 1607	EJVE..F650				11293-BZ010-	1		
1507 - 1901	1NRVE..F653				11293-BZ590-	1		
	11296C		LABEL, ENGINE SERVICE INFORMATION					
1111 - 1504	K3VE..F651				11293-BZ150-	1		
				#	(11293-BZ020-)	1		
1504 - 1507	K3VE..F651				11293-BZ020-	1		
1507 - 1901	1NRVE..F653				11293-BZ640-	1		
	41991A		PLATE, CAUTION					
1111 - 1507	F65#				41991-BZ070-	1		
1507 - 1607	F650				41991-BZ130-	1		
1507 - 1703	F653				41991-BZ130-	1		
1704 - 1901	F653				41991-BZ131-	1		
1901 -	F65#				41991-BZ131-	1		
	74552A		LABEL, SAFETY CAUTION					
1507 - 1609	F653..STD				74552-BZ040-	2		
1609 - 1901	F653..STD				74552-BZ050-	2		
1610 - 1901	F653..LO				74552-BZ050-	2		
1901 -	F65#				74552-BZ050-	2		
	74598A		LABEL, PASSENGER AIR BAG CAUTION					
1305 - 1507	F65#				74598-BZ030-	1		
1507 - 1607	F650				74598-BZ030-	1		
1507 - 1901	F653				74598-BZ030-	1		

FIG.74-55 CAUTION PLATE

PROD_DATE	MODELS	SPEC CODE	DESCRIPTION	R/P	PART NUMBER	QYT	REV_REF FR	REV_REF TO
	+----------+							
	| 74598A | LABEL, PASSENGER AIR BAG CAUTION							
	CONTINUED--+							
1901 -	F65#				74598-BZ030-	1		
	+----------+							
	| 74751 | LABEL, TIRE PRESSURE INFORMATION							
	+----------+							
1111 - 1507	F650				42661-BZ480-	1		
1111 - 1507	F651				42661-BZ500-	1		
1507 - 1607	F650				42661-BZ480-	1		
1507 - 1901	F653				42661-BZ750-	1		
1901 -	F65#				42661-BZ750-	1		

FIG.74-56 ASH RECEPTACLE

(1111-)F650,651

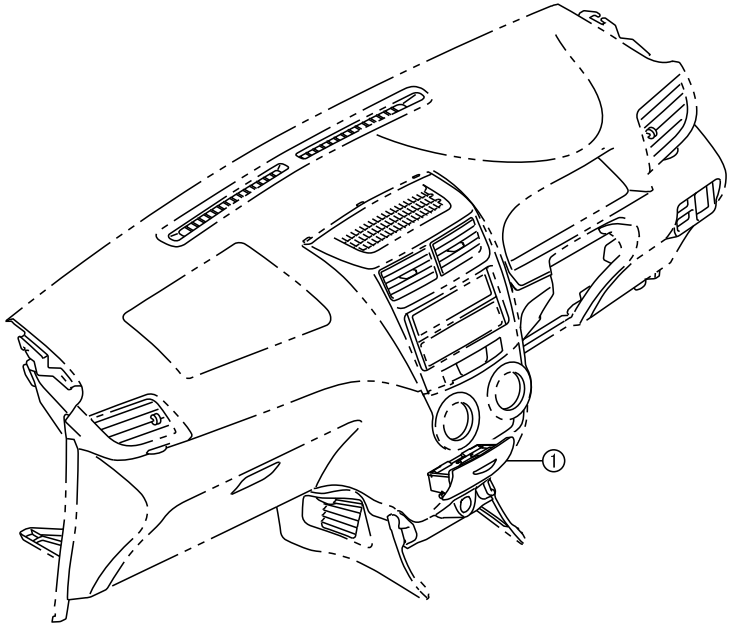

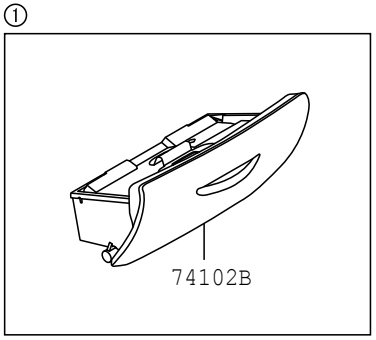

7456

743238

FIG.74-56 ASH RECEPTACLE

PROD_DATE	MODELS	SPEC CODE	DESCRIPTION	R/P	PART NUMBER	QYT	REV_REF FR	REV_REF TO
	+----------+							
	| 74102B | BOX SUB-ASSY, FRONT ASH RECEPTACLE							
	+----------+							
1111 - 1507	F650..STD		MD.GRAY(TRIM1#)		74102-BZ020-B0	1		
1111 - 1507	F651		-(TRIM4#)		74102-BZ020-E0	1		
1111 - 1507	F650..LO		-(TRIM4#)		74102-BZ020-E0	1		

(1111-)

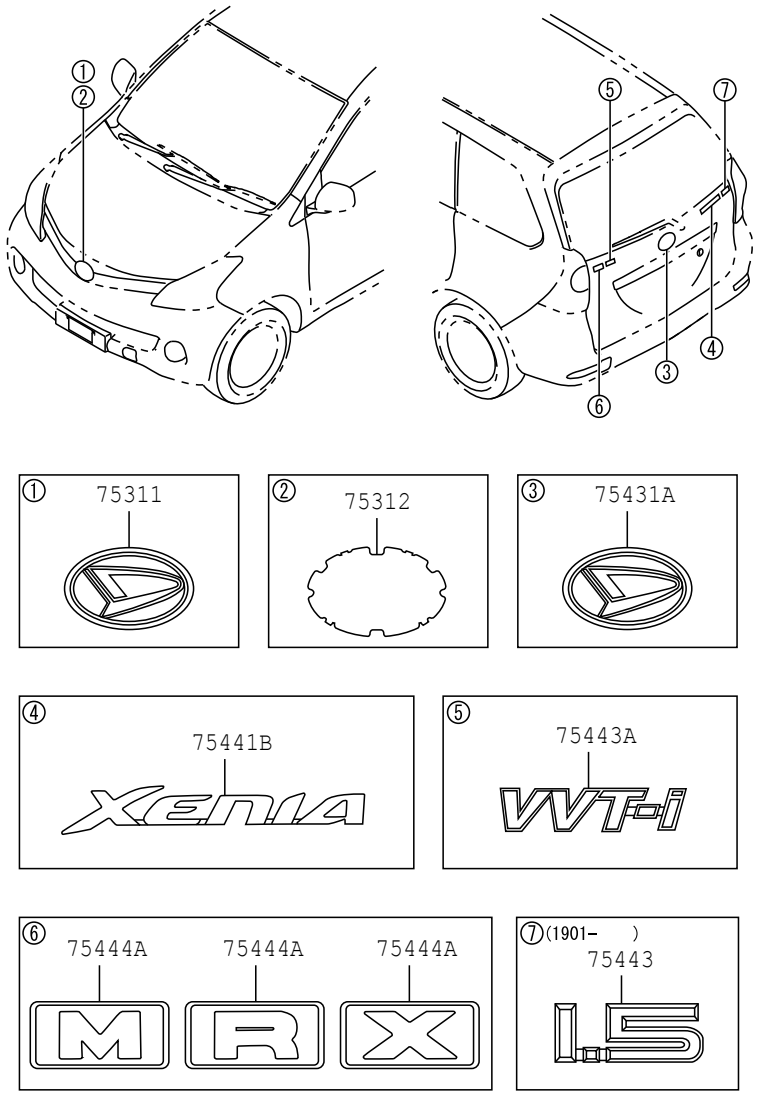

7551 752579-A

FIG.75-51 EMBLEM & NAME PLATE

PROD_DATE	MODELS	SPEC CODE	DESCRIPTION	R/P	PART NUMBER	QYT	REV_REF FR	REV_REF TO
	75311	EMBLEM, RADIATOR GRILLE (OR FRONT PANEL)						
1111 - 1507	F65#				75311-BZ260-	1		
1507 - 1607	F650				75311-BZ290-	1		
1507 - 1901	F653				75311-BZ290-	1		
1901 -	F65#				75311-BZ290-	1		
	75312	BASE, RADIATOR GRILLE EMBLEM						
1111 - 1507	F65#				75312-BZ060-	1		
1507 - 1607	F650				75312-BZ110-	1		
1507 - 1901	F653				75312-BZ110-	1		
1901 -	F65#				75312-BZ110-	1		
	75431A	EMBLEM, BACK DOOR, NO.1						
1111 - 1507	F65#		D MARK		75311-BZ190-	1		
1507 - 1607	F650		D MARK		75311-BZ190-	1		
1507 - 1901	F653		D MARK		75311-BZ190-	1		
1901 -	F65#		D MARK		75311-BZ190-	1		
	75441B	PLATE, BACK DOOR NAME						
1111 - 1507	F65#		XENIA		75441-BZ290-	1		
1507 - 1901	F65#		XENIA		75441-BZ290-	1		
1901 -	F65#		XENIA		75441-BZ290-	1		
	75443	PLATE, BACK DOOR NAME, NO.3						
1901 -	F654		1.5		75443-BZ120-	1		
	75443A	PLATE, LUGGAGE COMPARTMENT DOOR, NO.3						
1111 - 1507	F65#		VVT-I		75443-BZ170-	1		
1507 - 1607	F650		VVT-I		75443-BZ170-	1		

PROD_DATE	MODELS	SPEC CODE	DESCRIPTION	R/P	PART NUMBER	QYT	REV_REF FR	REV_REF TO
	+----------+							
	| 75443A | PLATE, LUGGAGE COMPARTMENT DOOR, NO.3							
	CONTINUED--+							
1507 - 1901	F653		DUAL VVT-I		75443-BZ180-	1		
1901 -	F65#		DUAL VVT-I		75443-BZ180-	1		
	+----------+							
	| 75444A | PLATE, BACK DOOR NAME, NO.4							
	+----------+							
1111 - 1507	F650..LO		M		75444-BZ130-	1		
1111 - 1507	F651..LO		R		75444-BZ140-	1		
1111 - 1507	F651..STD		X		75444-BZ180-	1		
1507 - 1607	F650..LO		M		75444-BZ130-	1		
1507 - 1901	F653..STD		R		75444-BZ140-	1		
1507 - 1901	F653..LO		X		75444-BZ180-	1		
1901 -	F65#..STD		R		75444-BZ140-	1		
1901 -	F653..LO		X		75444-BZ180-	1		

FIG.75-52 MOULDING

(1111-)

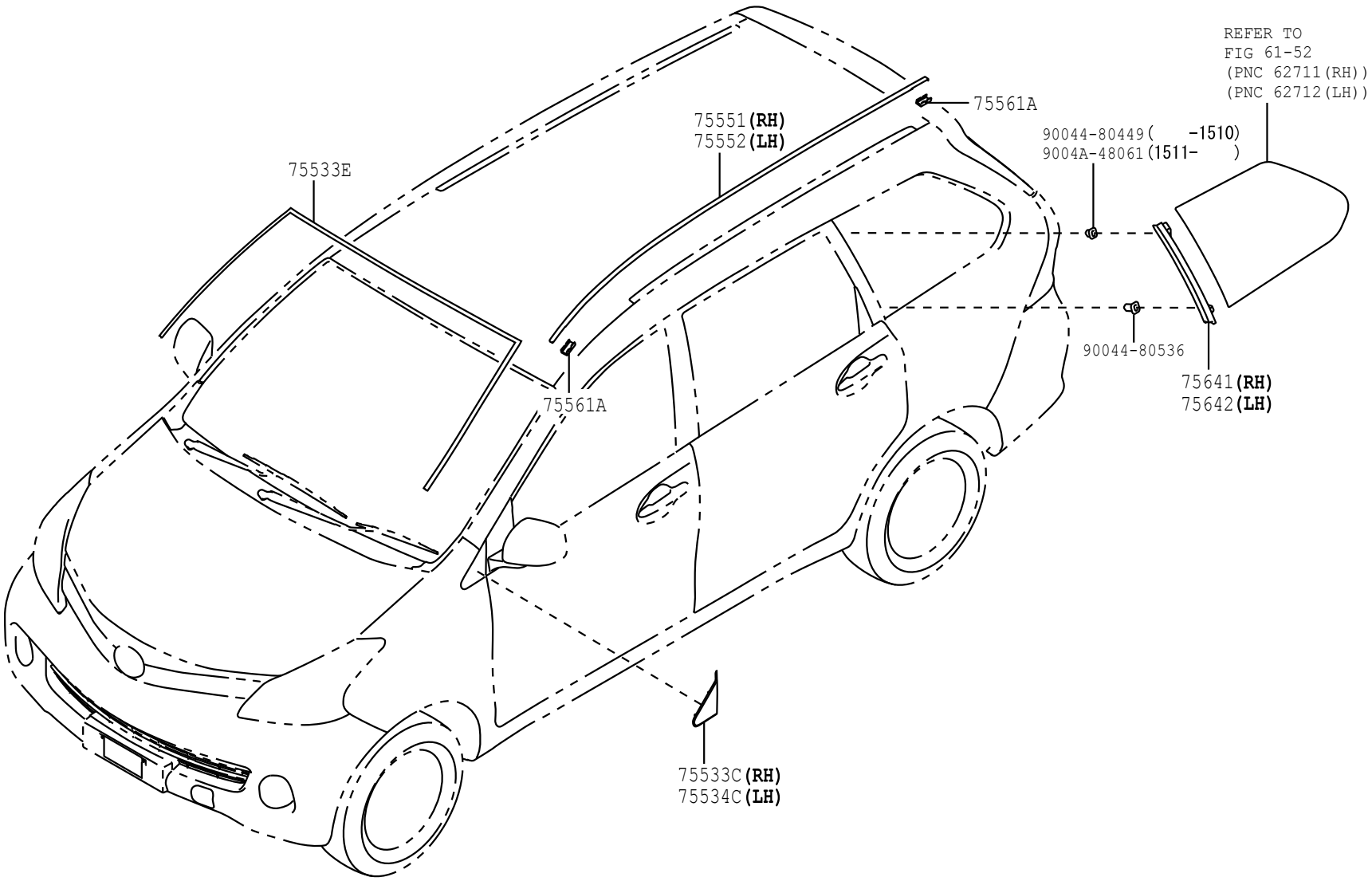

7552

752581-E

PROD_DATE	MODELS	SPEC CODE	DESCRIPTION	R/P	PART NUMBER	QYT	REV_REF FR	REV_REF TO
	75533C		GARNISH, FRONT PILLAR, OUTER RH					
1111 - 1507	F65#				62225-BZ040-	1		
1507 - 1607	F650				62225-BZ040-	1		
1507 - 1901	F653				62225-BZ040-	1		
1901 -	F65#				62225-BZ040-	1		
	75533E		MOULDING, WINDSHIELD, OUTSIDE					
1111 - 1507	F65#				75533-BZ100-	1		
1507 - 1607	F650				75533-BZ100-	1		
1507 - 1901	F653				75533-BZ100-	1		
1901 -	F65#				75533-BZ100-	1		
	75534C		GARNISH, FRONT PILLAR, OUTER LH					
1111 - 1507	F65#				62226-BZ040-	1		
1507 - 1607	F650				62226-BZ040-	1		
1507 - 1901	F653				62226-BZ040-	1		
1901 -	F65#				62226-BZ040-	1		
	75551		MOULDING, ROOF DRIP SIDE FINISH, RH					
1111 - 1507	F65#				75551-BZ100-	1		
1507 - 1607	F650				75551-BZ100-	1		
1507 - 1901	F653				75551-BZ100-	1		
1901 -	F65#				75551-BZ100-	1		
	75552		MOULDING, ROOF DRIP SIDE FINISH, LH					
1111 - 1507	F65#				75552-BZ080-	1		
1507 - 1607	F650				75552-BZ080-	1		
1507 - 1901	F653				75552-BZ080-	1		
1901 -	F65#				75552-BZ080-	1		

FIG. 75-52 MOULDING

PROD_DATE	MODELS	SPEC CODE	DESCRIPTION	R/P	PART NUMBER	QYT	REV_REF FR	REV_REF TO
	75561A		CLIP, ROOF DRIP SIDE FINISH MOULDING					
1111 - 1507	F65#				75561-BZ020-	4		
				#	(75561-B1020-)	1		
1507 - 1607	F650				75561-BZ020-	4		
				#	(75561-B1020-)	1		
1507 - 1901	F653				75561-BZ020-	4		
				#	(75561-B1020-)	1		
1901 -	F65#				75561-BZ020-	4		
				#	(75561-B1020-)	1		
	75641		MOULDING, QUARTER WINDOW, OUTSIDE FRONT R H					
1111 - 1507	F65#				75641-BZ020-	1		
1507 - 1607	F650				75641-BZ020-	1		
1507 - 1901	F653				75641-BZ020-	1		
1901 -	F65#				75641-BZ020-	1		
	75642		MOULDING, QUARTER WINDOW, OUTSIDE FRONT L H					
1111 - 1507	F65#				75642-BZ020-	1		
1507 - 1607	F650				75642-BZ020-	1		
1507 - 1901	F653				75642-BZ020-	1		
1901 -	F65#				75642-BZ020-	1		

(1111-1312)

FUEL TANK ILLUST NO. 1 OF 3

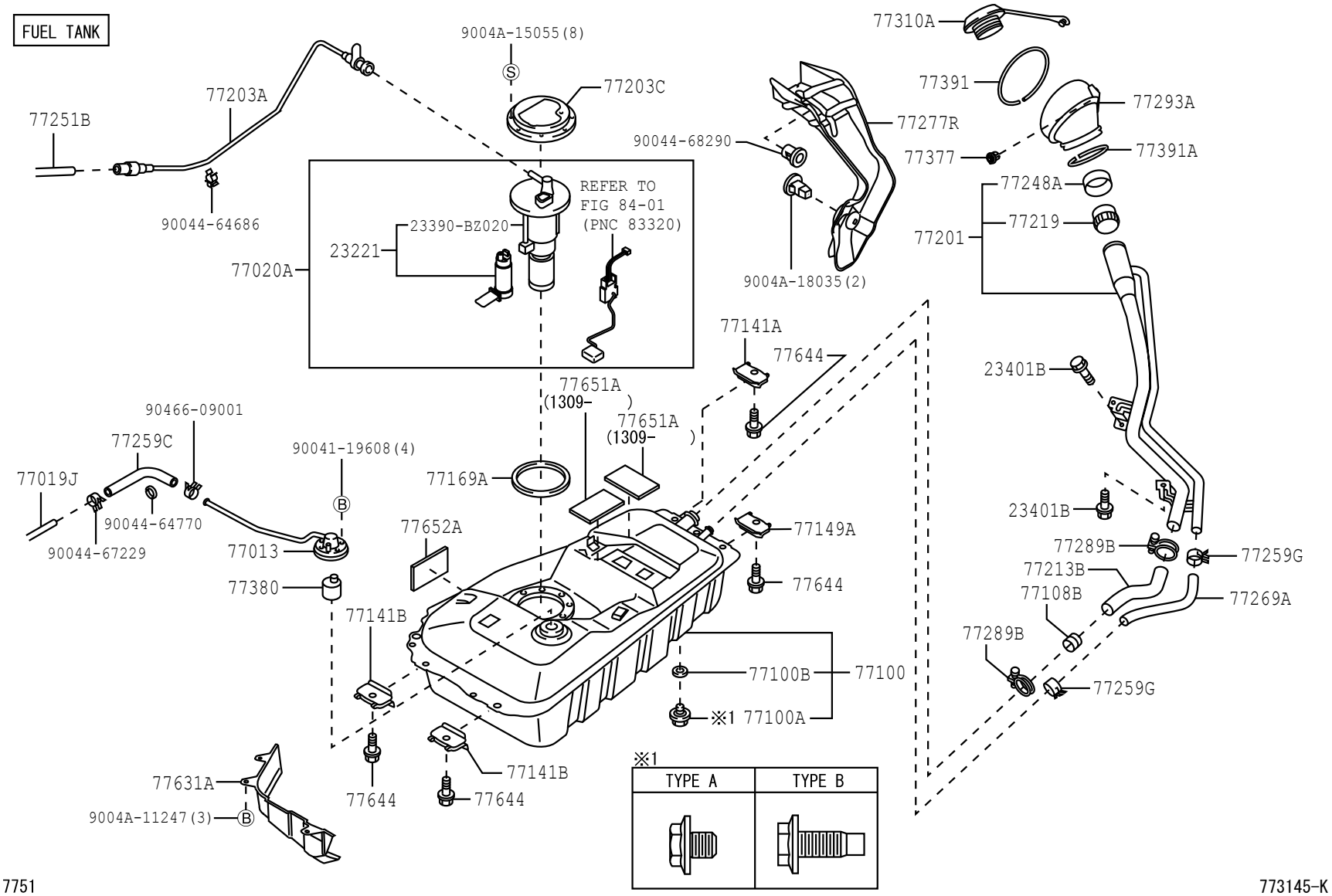

(1111-1507)

FUEL TUBE ILLUST NO. 2 OF 3

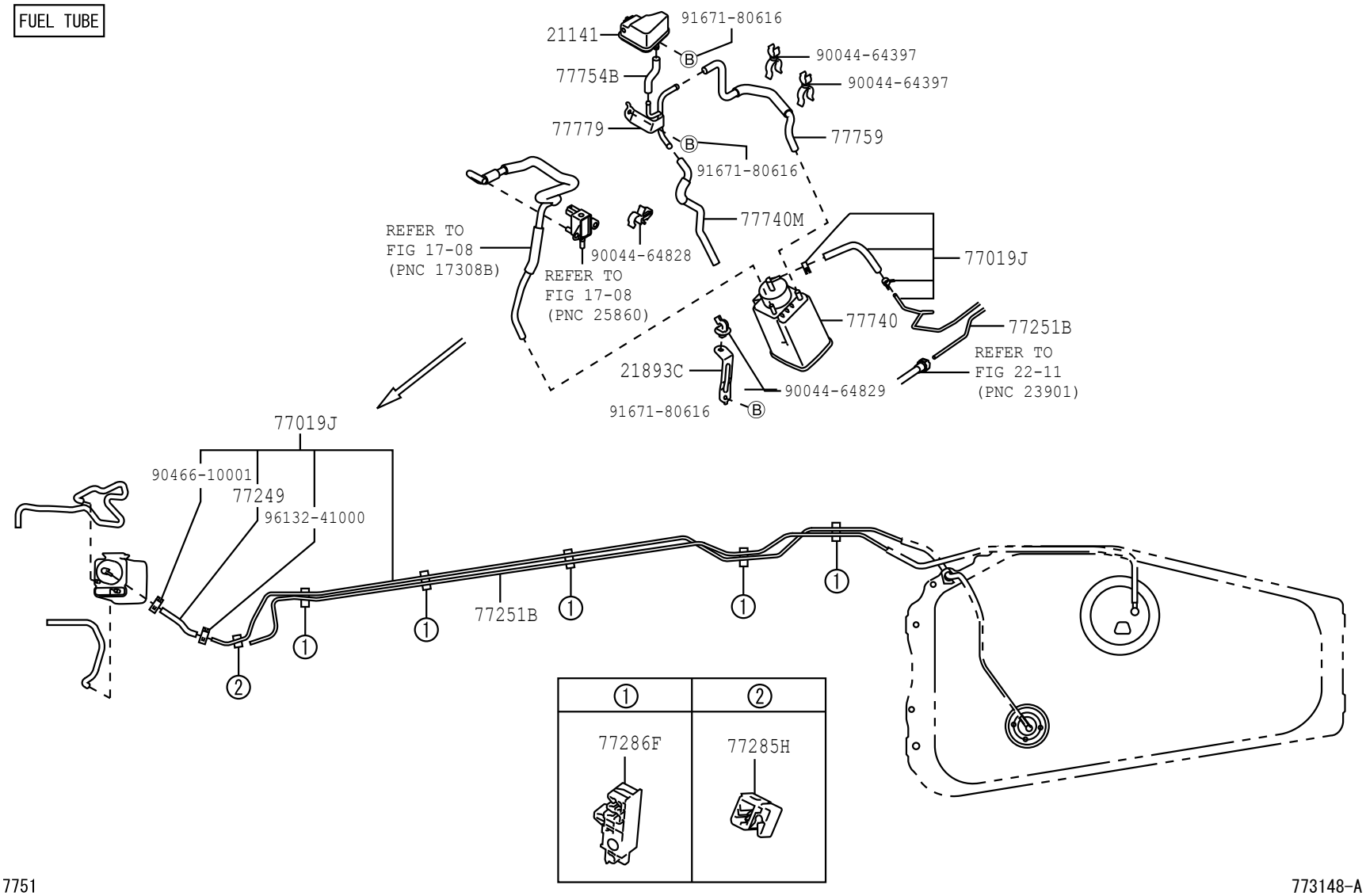

7751

773148-A

(1111-)

FUEL LID CABLE ILLUST NO. 3 OF 3

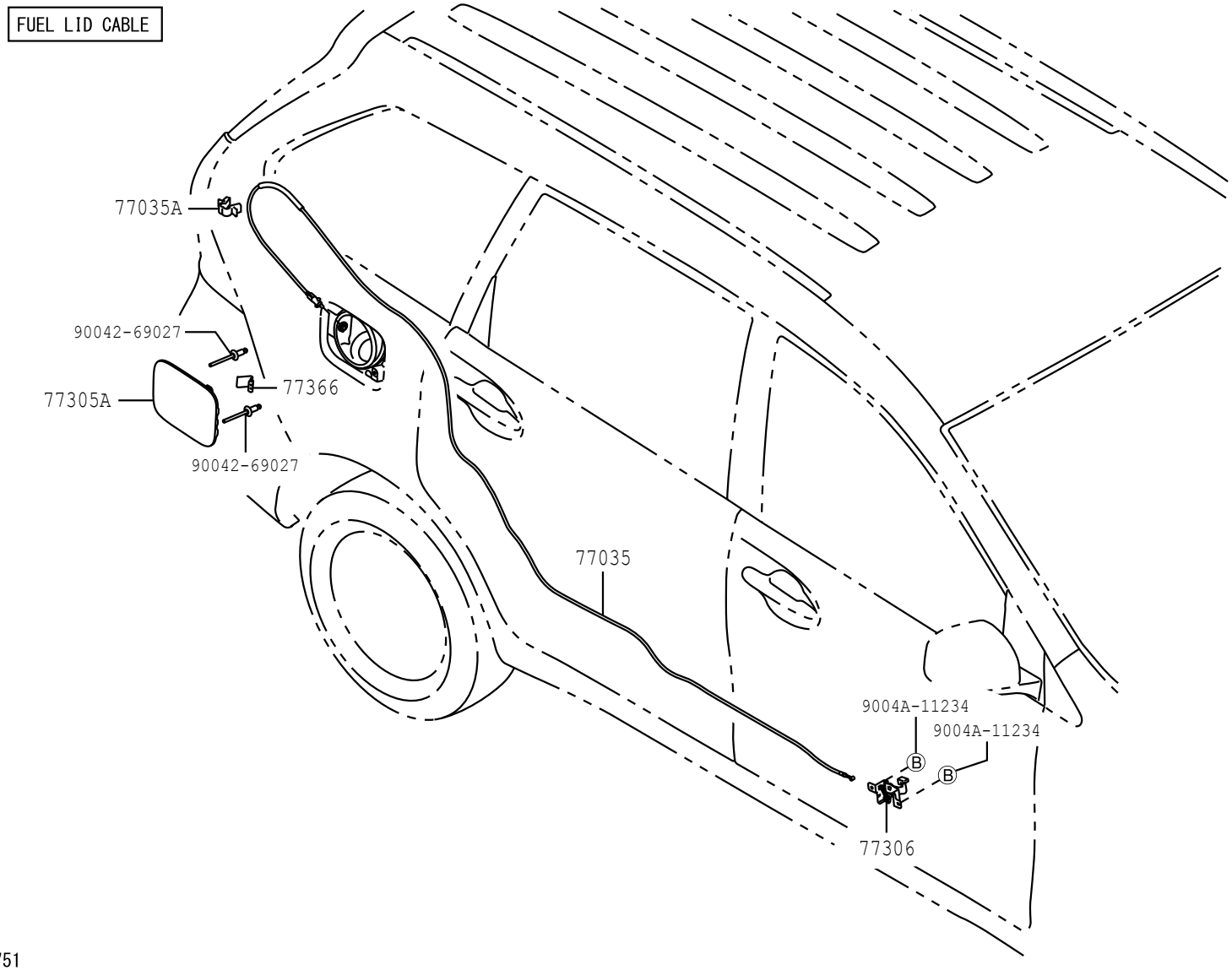

7751

773150-B

FIG. 77-51 FUEL TANK & TUBE

(1312-)

FUEL TANK ILLUST NO. 1 OF 3

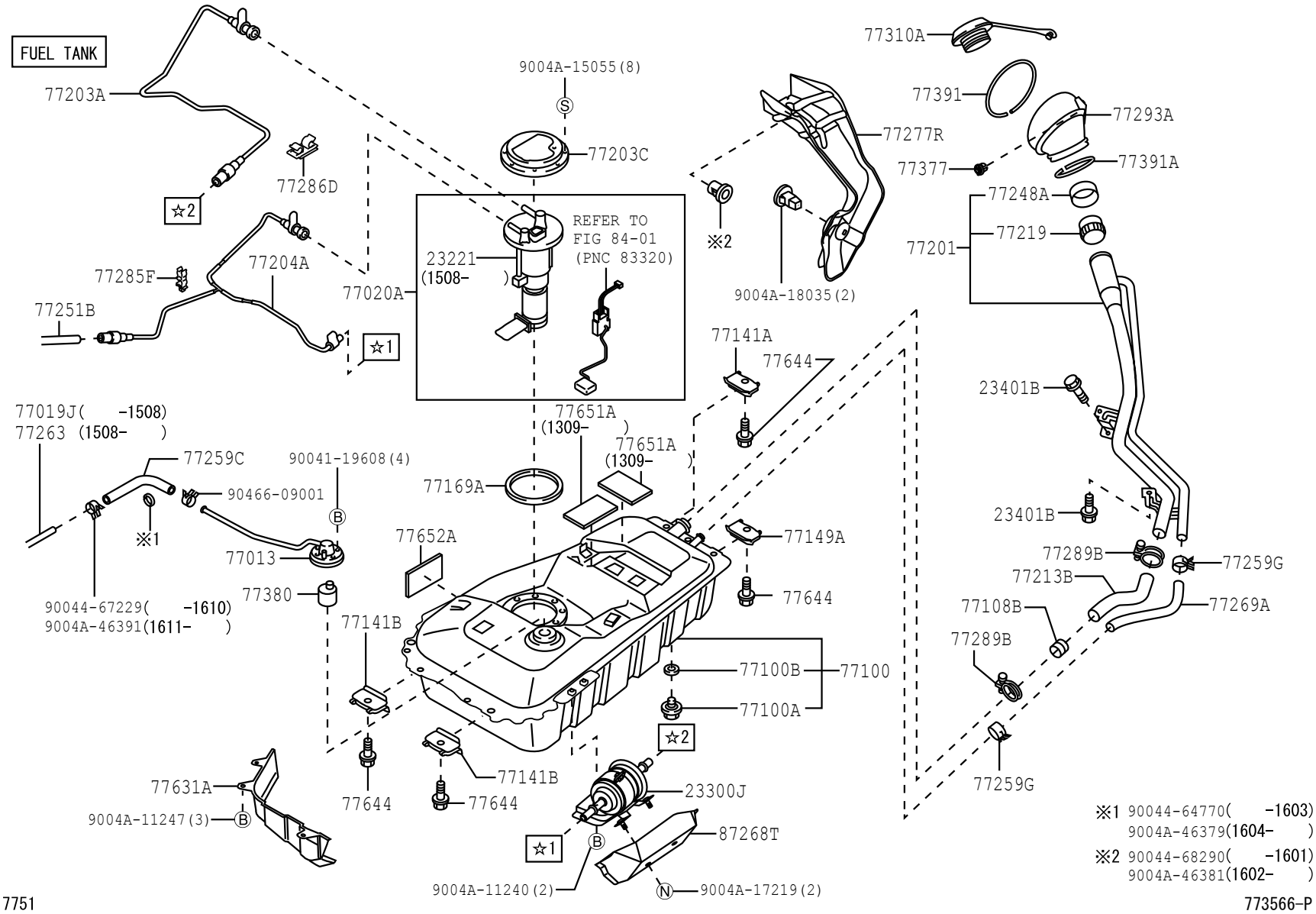

(1507-)F650

FUEL TUBE ILLUST NO. 2 OF 3

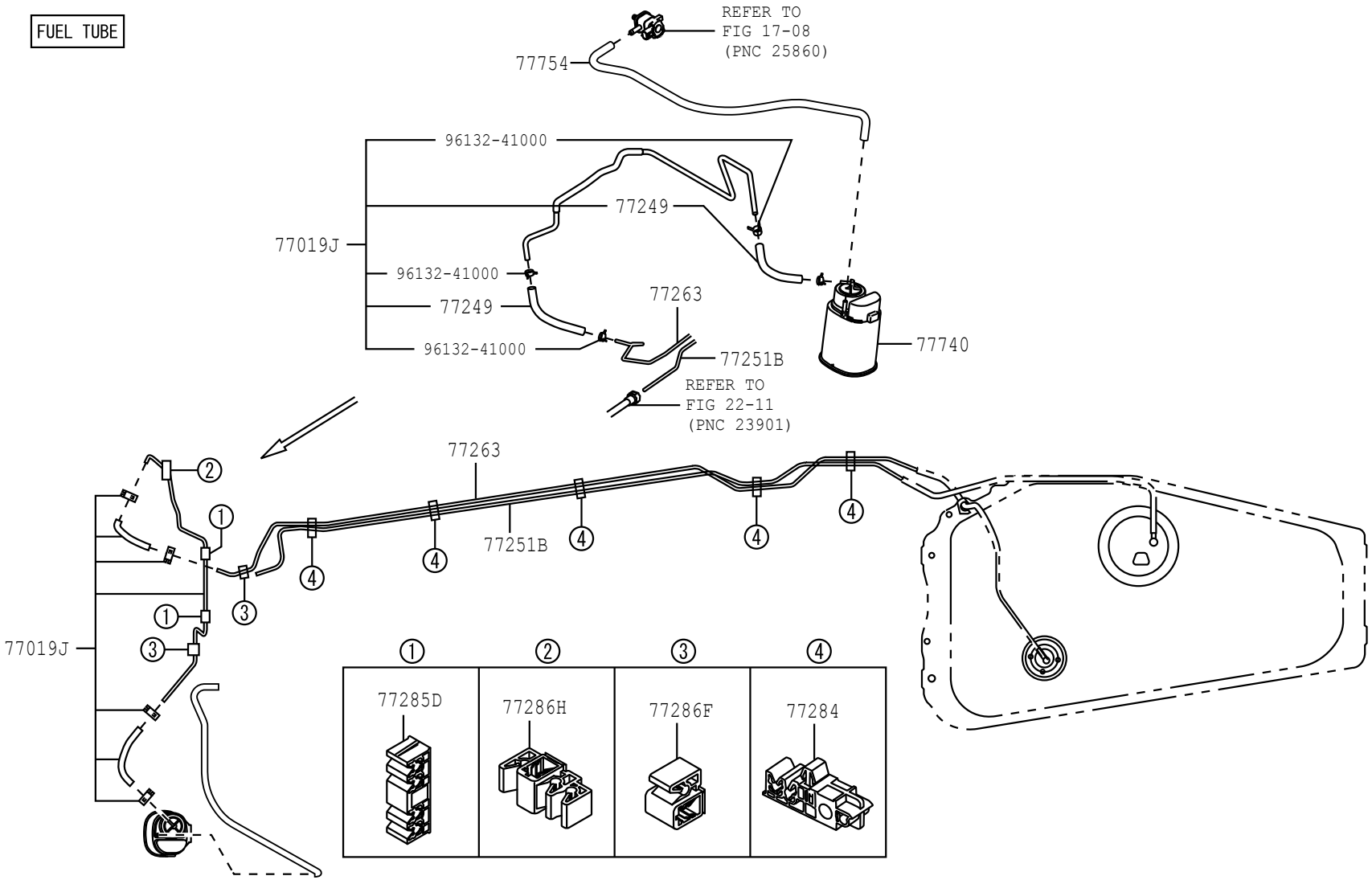

7751 773882

(1507-)F653,654

FUEL TUBE ILLUST NO. 2 OF 3

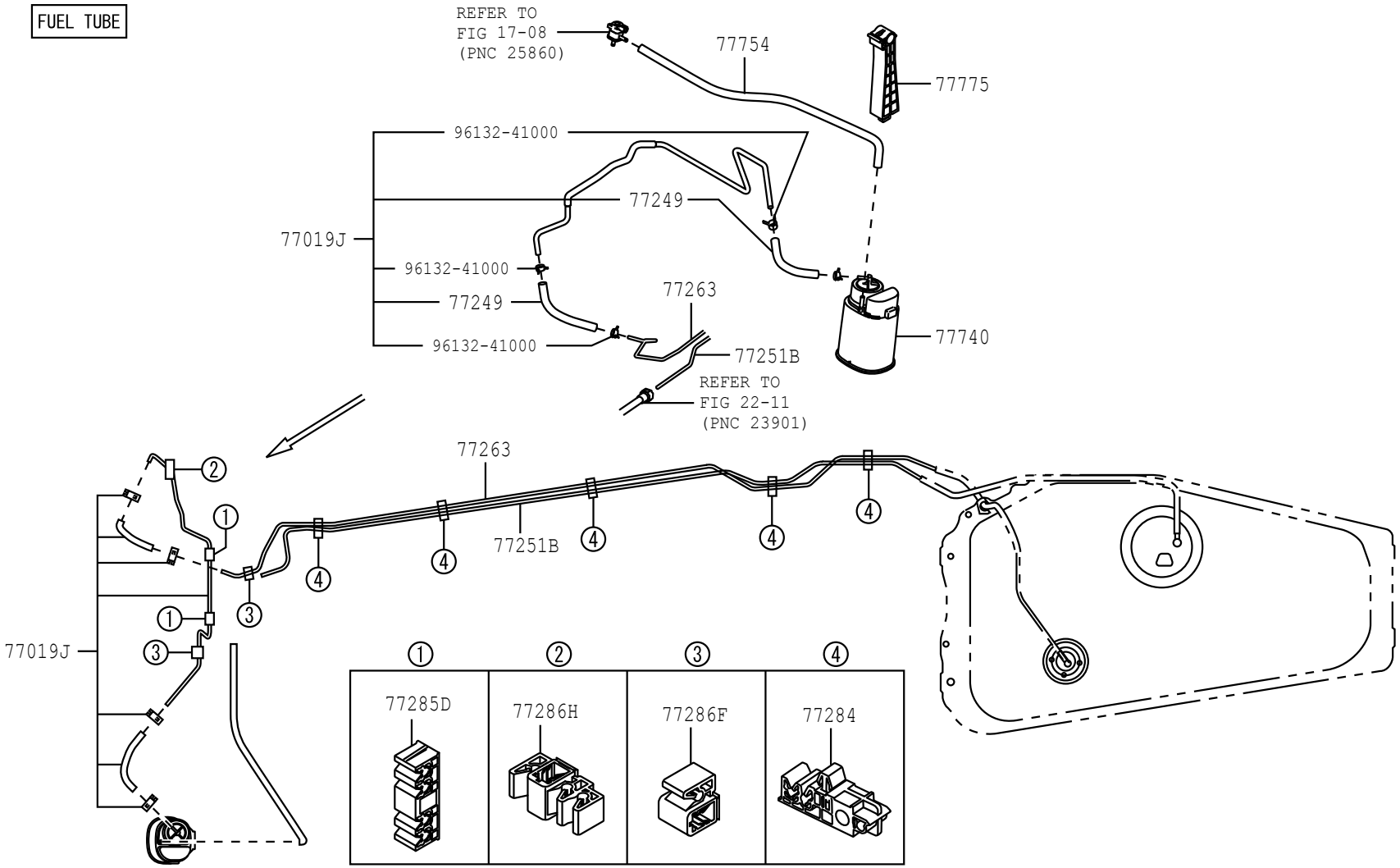

7751 773883

PROD_DATE	MODELS	SPEC CODE	DESCRIPTION	R/P	PART NUMBER	QYT	REV_REF FR	REV_REF TO
	+----------+							
	| 21141 | CHAMBER, SUCTION							
	+----------+							
1111 - 1507	K3VE,EJVE..F65#				21141-BZ040-	1		
				#	(21141-B0020-)	1		
	+----------+							
	| 21893C | BRACKET							
	+----------+							
1111 - 1507	K3VE,EJVE..F65#				21893-BZ030-	1		
	+----------+							
	| 23221 | PUMP, FUEL							
	+----------+							
1111 - 1312	K3VE,EJVE..F65#				23101-BZ070-	1		
1507 - 1901	EJVE,1NRVE..F65#				23100-BZ220-	1		
1901 -	1NRVE,2NRVE..F65#				23100-BZ220-	1		
	+----------+							
	| 23300J | FILTER ASSY, FUEL							
	+----------+							
1312 - 1507	K3VE,EJVE..F65#				23300-B4010-	1		
				#	(23300-BZ010-)	1		
1507 - 1508	EJVE,1NRVE..F65#				23300-B4010-	1		
				#	(23300-BZ010-)	1		
1509 - 1901	EJVE,1NRVE..F65#				23300-BZ010-	1		
1901 -	1NRVE,2NRVE..F65#				23300-BZ010-	1		
	+----------+							
	| 23401B | BOLT							
	+----------+							
1111 - 1209	K3VE,EJVE..F65#				91653-40616-	2		
1210 - 1507	K3VE,EJVE..F65#				9004A-11252-	2		
1507 - 1607	EJVE..F650				9004A-11252-	2		
1507 - 1901	1NRVE..F653				9004A-11252-	2		
1901 -	1NRVE,2NRVE..F65#				9004A-11252-	2		
	+----------+							
	| 77013 | TUBE SUB-ASSY, FUEL TANK BREATHER, NO.2							
	+----------+							
1111 - 1311	F65#				77013-BZ010-	1		
1312 - 1507	F65#				77013-BZ100-	1		
1507 - 1901	F65#				77013-BZ100-	1		

FIG.77-51 FUEL TANK & TUBE

PROD_DATE	MODELS	SPEC CODE	DESCRIPTION	R/P	PART NUMBER	QYT	REV_REF FR	REV_REF TO
	+----------+							
	| 77013 | TUBE SUB-ASSY, FUEL TANK BREATHER, NO.2							
	CONTINUED--+							
1901 -	F65#				77013-BZ100-	1		
	+----------+							
	| 77019J | TUBE SUB-ASSY, FUEL TANK TO CANISTER							
	+----------+							
1111 - 1507	F65#				77019-BZ090-	1		
1507 - 1607	F650				77019-BZ160-	1		
1507 - 1901	F653				77019-BZ160-	1		
1901 -	F65#				77019-BZ160-	1		
	+----------+							
	| 77020A | TUBE ASSY, FUEL SUCTION W/PUMP & GAGE							
	+----------+							
1111 - 1312	F65#				23210-BZ150-	1		
1312 - 1507	F65#				23210-BZ300-	1		
1507 - 1901	F65#				23210-BZ130-	1		
1901 -	F65#				23210-BZ130-	1		
	+----------+							
	| 77035 | CABLE SUB-ASSY, FUEL LID LOCK CONTROL							
	+----------+							
1111 - 1507	F65#				77035-BZ130-	1		
1507 - 1607	F650				77035-BZ130-	1		
1507 - 1901	F653				77035-BZ130-	1		
1901 -	F65#				77035-BZ130-	1		
	+----------+							
	| 77035A | CLAMP (FOR FUEL LID LOCK CONTROL CABLE)							
	+----------+							
1111 - 1505	F65#				90044-64371-	1		
1506 - 1507	F65#				9004A-46242-	1		
1507 - 1607	F650				9004A-46242-	1		
1507 - 1901	F653				9004A-46242-	1		
1901 -	F65#				9004A-46242-	1		

PROD_DATE	MODELS	SPEC CODE	DESCRIPTION	R/P	PART NUMBER	QYT	REV_REF FR	REV_REF TO
	+----------+							
	| 77100 | TANK ASSY, FUEL							
	+----------+							
1111 - 1312	F65#				77001-BZ160-	1		
1312 - 1507	F65#				77001-BZ260-	1		
1507 - 1901	F65#				77001-BZ260-	1		
1901 - 2004	F65#				77001-BZ260-	1		
2005 -	F65#				77001-BZ620-	1		
	+----------+							
	| 77100A | PLUG(FOR FUEL TANK)							
	+----------+							
1111 - 1302	F65#		TYPE B		90041-05177-	1		
1302 - 1507	F65#		TYPE A		90041-05481-	1		
1507 - 1511	F65#				90041-05481-	1		
1512 - 1901	F65#				9004A-10186-	1		
				#	(90041-05481-)	1		
1901 -	F65#				9004A-10186-	1		
				#	(90041-05481-)	1		
	+----------+							
	| 77100B | GASKET(FOR FUEL TANK)							
	+----------+							
1111 - 1507	F65#				90044-30291-	1		
1507 - 1901	F65#				90044-30291-	1		
1901 -	F65#				90044-30291-	1		
	+----------+							
	| 77108B | VALVE SUB-ASSY, FUEL TANK FILLER CHECK							
	+----------+							
1111 - 1507	F65#				77108-B2010-	1		
1507 - 1901	F65#				77108-B2010-	1		
1901 -	F65#				77108-B2010-	1		
	+----------+							
	| 77141A | REINFORCEMENT, FUEL TANK FLANGE							
	+----------+							
1111 - 1507	F65#				77141-BZ120-	1		
1507 - 1901	F65#				77141-BZ120-	1		
1901 -	F65#				77141-BZ120-	1		

FIG.77-51 FUEL TANK & TUBE

PROD_DATE	MODELS	SPEC CODE	DESCRIPTION	R/P	PART NUMBER	QYT	REV_REF FR	REV_REF TO
	+----------+							
	| 77141B | REINFORCEMENT, FUEL TANK FLANGE, NO.1							
	+----------+							
1111 - 1507	F65#				77141-BZ090-	2		
1507 - 1901	F65#				77141-BZ090-	2		
1901 -	F65#				77141-BZ090-	2		
	+----------+							
	| 77149A | REINFORCEMENT, FUEL TANK SIDE							
	+----------+							
1111 - 1507	F65#				77141-BZ130-	1		
1507 - 1901	F65#				77141-BZ130-	1		
1901 -	F65#				77141-BZ130-	1		
	+----------+							
	| 77169A | GASKET, FUEL SUCTION TUBE SET							
	+----------+							
1111 - 1507	F65#				23232-BZ010-	1		
1507 - 1901	F65#				23232-BZ010-	1		
1901 -	F65#				23232-BZ010-	1		
	+----------+							
	| 77201 | PIPE SUB-ASSY, FUEL TANK INLET							
	+----------+							
1111 - 1507	F65#				77201-BZ020-	1		
1507 - 1607	F650				77201-BZ170-	1		
1507 - 1901	F653				77201-BZ170-	1		
1901 -	F65#				77201-BZ170-	1		
	+----------+							
	| 77203A | TUBE SUB-ASSY, FUEL SUCTION							
	+----------+							
1111 - 1205	F65#				77203-BZ080-	1		
1206 - 1311	F65#				77203-BZ081-	1		
1312 - 1507	F65#				77203-BZ100-	1		
1507 - 1901	F65#				77203-BZ100-	1		
1901 -	F65#				77203-BZ100-	1		

PROD_DATE	MODELS	SPEC CODE	DESCRIPTION	R/P	PART NUMBER	QYT	REV_REF FR	REV_REF TO
	+----------+							
	| 77203C | BRACKET, FUEL PUMP							
	+----------+							
1111 - 1507	F65#				23265-BZ010-	1		
1507 - 1901	F65#				23265-BZ010-	1		
1901 -	F65#				23265-BZ010-	1		
	+----------+							
	| 77204A | TUBE, FUEL TANK RETURN							
	+----------+							
1312 - 1507	F65#				77204-BZ010-	1		
1507 - 1901	F65#				77204-BZ010-	1		
1901 -	F65#				77204-BZ010-	1		
	+----------+							
	| 77213B | HOSE, FUEL TANK TO FILLER PIPE							
	+----------+							
1111 - 1507	F65#				77213-BZ010-	1		
				#	(77213-BZ190-)	1		
1507 - 1810	F65#				77213-BZ160-	1		
1810 - 1901	F653				77213-BZ170-	1		
1901 -	F65#				77213-BZ170-	1		
	+----------+							
	| 77219 | COVER, FUEL TANK FILLER PIPE							
	+----------+							
1111 - 1412	F65#				77219-20070-	2		
1501 - 1507	F65#				77219-0K010-	2		
1507 - 1607	F650				77219-0K010-	2		
1507 - 1901	F653				77219-0K010-	2		
1901 -	F65#				77219-0K010-	2		
	+----------+							
	| 77248A | HOLDER, FUEL TANK FILLER PIPE COVER							
	+----------+							
1111 - 1501	F65#				77248-20030-	1		
	+----------+							
	| 77249 | HOSE, FUEL EMISSION							
	+----------+							
1111 - 1507	F65#		*H,L=150		95331-04015-	1		
1507 - 1607	F650		*H,L=150		95331-04015-	2		

FIG.77-51 FUEL TANK & TUBE

PROD_DATE	MODELS	SPEC CODE	DESCRIPTION	R/P	PART NUMBER	QYT	REV_REF FR	REV_REF TO
	+----------+							
	| 77249 | HOSE, FUEL EMISSION							
	CONTINUED--+							
1507 - 1901	F653		*H,L=150		95331-04015-	2		
1901 -	F65#		*H,L=150		95331-04015-	2		
	+----------+							
	| 77251B | TUBE, FUEL MAIN							
	+----------+							
1111 - 1507	F65#				77251-BZ160-	1		
1507 - 1607	F650				77251-BZ210-	1		
1507 - 1901	F653				77251-BZ210-	1		
1901 -	F65#				77251-BZ210-	1		
	+----------+							
	| 77259C | HOSE, FUEL							
	+----------+							
1111 - 1507	F65#				77259-BZ010-	1		
1507 - 1901	F65#				77259-BZ010-	1		
1901 -	F65#				77259-BZ010-	1		
	+----------+							
	| 77259G | CLIP, FUEL HOSE							
	+----------+							
1111 - 1507	F65#				90044-67244-	2		
1507 - 1901	F65#				90044-67244-	2		
1901 -	F65#				90044-67244-	2		
	+----------+							
	| 77263 | TUBE, FUEL TANK TO CANISTER, NO.3							
	+----------+							
1507 - 1607	F650				77263-BZ160-	1		
1507 - 1901	F653				77263-BZ160-	1		
1901 -	F65#				77263-BZ160-	1		
	+----------+							
	| 77269A | HOSE, FUEL TANK BREATHER							
	+----------+							
1111 - 1507	F65#				77269-BZ010-	1		
1507 - 1810	F65#				77269-BZ010-	1		
1810 - 1901	F653				77269-BZ170-	1		
				#	(77269-B0010-)	1		

PROD_DATE	MODELS	SPEC CODE	DESCRIPTION	R/P	PART NUMBER	QYT	REV_REF FR	REV_REF TO
	+----------+							
	| 77269A | HOSE, FUEL TANK BREATHER							
	CONTINUED--+							
1901 -	F65#				77269-BZ170-	1		
				#	(77269-B0010-)	1		
	+----------+							
	| 77277R | PROTECTOR, FUEL TANK FILLER PIPE							
	+----------+							
1111 - 1507	F65#				77277-BZ012-	1		
1507 - 1607	F650				77277-BZ012-	1		
1507 - 1901	F653				77277-BZ012-	1		
1901 -	F65#				77277-BZ012-	1		
	+----------+							
	| 77284 | CLAMP, FUEL TUBE							
	+----------+							
1507 - 1607	F650				9004A-46313-	5		
1507 - 1901	F653				9004A-46313-	5		
1901 -	F65#				9004A-46313-	5		
	+----------+							
	| 77285D | CLAMP, FUEL TUBE, NO.1							
	+----------+							
1507 - 1509	F65#				90044-64668-	2		
1510 - 1901	F65#				9004A-46318-	2		
1901 -	F65#				9004A-46318-	2		
	+----------+							
	| 77285F | CLAMP, FUEL TUBE, NO.1							
	+----------+							
1312 - 1507	F65#				77285-B0010-	1		
1507 - 1901	F65#				77285-B0010-	1		
1901 -	F65#				77285-B0010-	1		
	+----------+							
	| 77285H | CLAMP, FUEL TUBE, NO.1							
	+----------+							
1111 - 1507	F65#				9004A-46299-	1		
				#	(90044-64655-)	1		
	+----------+							
	| 77286D | CLAMP, FUEL TUBE, NO.2							
	+----------+							
1312 - 1507	F65#				77286-B0010-	1		

FIG.77-51 FUEL TANK & TUBE

PROD_DATE	MODELS	SPEC CODE	DESCRIPTION	R/P	PART NUMBER	QYT	REV_REF FR	REV_REF TO
	+----------+							
	| 77286D | CLAMP, FUEL TUBE, NO.2							
	CONTINUED--+							
1507 - 1901	F65#				77286-B0010-	1		
1901 -	F65#				77286-B0010-	1		
	+----------+							
	| 77286F | CLAMP, FUEL TUBE, NO.2							
	+----------+							
1111 - 1301	F65#				90044-64716-	5		
1302 - 1507	F65#				9004A-46313-	5		
1507 - 1607	F650				9004A-46299-	2		
				#	(90044-64655-)	1		
1507 - 1901	F653				9004A-46299-	2		
				#	(90044-64655-)	1		
1901 -	F65#				9004A-46299-	2		
				#	(90044-64655-)	1		
	+----------+							
	| 77286H | CLAMP, FUEL TUBE, NO.3							
	+----------+							
1507 - 1607	F650				90044-64781-	1		
1507 - 1901	F653				90044-64781-	1		
1901 -	F65#				90044-64781-	1		
	+----------+							
	| 77289B | CLAMP, FUEL TUBE, NO.3							
	+----------+							
1111 - 1507	F65#				96111-30440-	2		
1507 - 1901	F65#				96111-30440-	2		
1901 -	F65#				96111-30440-	2		
	+----------+							
	| 77293A | SHIELD, FUEL TANK FILLER PIPE, NO.3							
	+----------+							
1111 - 1205	F65#				77293-BZ010-	1		
1206 - 1407	F65#				77293-BZ011-	1		
1408 - 1507	F65#				77293-BZ012-	1		
1507 - 1607	F650				77293-BZ012-	1		
1507 - 1901	F653				77293-BZ012-	1		

PROD_DATE	MODELS	SPEC CODE	DESCRIPTION	R/P	PART NUMBER	QYT	REV_REF FR	REV_REF TO
	77293A		SHIELD, FUEL TANK FILLER PIPE, NO.3					
1901 -	F65#				77293-BZ012-	1		
	77305A		LID SUB-ASSY, FUEL FILLER OPENING					
1111 - 1507	F65#				77305-BZ070-	1		
1507 - 1607	F650				77305-BZ070-	1		
1507 - 1901	F653				77305-BZ070-	1		
1901 -	F65#				77305-BZ070-	1		
	77306		LEVER SUB-ASSY, FUEL LID LOCK OPEN					
1111 - 1507	F65#				77306-BZ020-	1		
1507 - 1607	F650				77306-BZ020-	1		
1507 - 1901	F653				77306-BZ020-	1		
1901 -	F65#				77306-BZ020-	1		
	77310A		CAP ASSY, FUEL TANK					
1111 - 1507	F65#				77300-52030-	1		
1507 - 1607	F650				77300-52030-	1		
1507 - 1901	F653				77300-52030-	1		
1901 -	F65#				77300-52030-	1		
	77366		SPRING, FUEL FILLER OPENING LID HINGE					
1111 - 1502	F65#				77366-87203-	1		
1502 - 1507	F65#				77366-B2050-	1		
1507 - 1607	F650				77366-B2050-	1		
1507 - 1901	F653				77366-B2050-	1		
1901 -	F65#				77366-B2050-	1		

FIG.77-51 FUEL TANK & TUBE

PROD_DATE	MODELS	SPEC CODE	DESCRIPTION	R/P	PART NUMBER	QYT	REV_REF FR	REV_REF TO
	77377		RETAINER, FUEL FILLER OPENING LID LOCK					
1111 - 1507	F65#				77377-12050-	1		
1507 - 1607	F650				77377-12050-	1		
1507 - 1901	F653				77377-12050-	1		
1901 -	F65#				77377-12050-	1		
	77380		VALVE ASSY, FUEL CUT OFF					
1111 - 1507	F65#				77380-0K010-	1		
1507 - 1901	F65#				77380-0K010-	1		
1901 -	F65#				77380-0K010-	1		
	77391		RING, FUEL INLET BOX					
1111 - 1507	F65#				77391-BZ010-	1		
1507 - 1607	F650				77391-BZ010-	1		
1507 - 1901	F653				77391-BZ010-	1		
1901 -	F65#				77391-BZ010-	1		
	77391A		RING, FUEL INLET BOX					
1111 - 1507	F65#				77391-BZ040-	1		
1507 - 1607	F650				77391-BZ040-	1		
1507 - 1901	F653				77391-BZ040-	1		
1901 -	F65#				77391-BZ040-	1		
	77631A		PROTECTOR, FUEL TANK, LOWER CENTER					
1111 - 1412	F65#				77631-BZ060-	1		
1501 - 1507	F65#				77631-BZ061-	1		
1507 - 1901	F65#				77631-BZ061-	1		
1901 -	F65#				77631-BZ061-	1		

PROD_DATE	MODELS	SPEC CODE	DESCRIPTION	R/P	PART NUMBER	QYT	REV_REF FR	REV_REF TO
	+----------+							
	| 77644 | BOLT, FUEL TANK							
	+----------+							
1111 - 1507	F65#				90041-20084-	4		
1507 - 1901	F65#				90041-20084-	4		
1901 -	F65#				90041-20084-	4		
	+----------+							
	| 77651A | CUSHION, FUEL TANK, NO.1							
	+----------+							
1309 - 1312	F65#				77652-B2010-	2		
1507 - 1610	F65#				77652-B2010-	2		
1611 - 1901	F653				77651-BZ030-	2		
1901 -	F65#				77651-BZ030-	2		
	+----------+							
	| 77652A | CUSHION, FUEL TANK, NO.2							
	+----------+							
1206 - 1312	F65#				77652-B2010-	1		
1312 - 1507	F65#				77652-B2010-	3		
1507 - 1610	F65#				77652-B2010-	1		
1611 - 1901	F653				77652-BZ040-	1		
1901 -	F65#				77652-BZ040-	1		
	+----------+							
	| 77740 | CANISTER ASSY, CHARCOAL							
	+----------+							
1111 - 1507	F65#				77740-BZ020-	1		
1507 - 1607	F650				77740-BZ060-	1		
1507 - 1901	F653				77740-BZ060-	1		
1901 -	F65#				77740-BZ060-	1		
	+----------+							
	| 77740M | HOSE, CHARCOAL CANISTER							
	+----------+							
1111 - 1507	F65#		L=45		77759-BZ030-	1		
	+----------+							
	| 77754 | HOSE, CHARCOAL CANISTER OUTLET, NO.1							
	+----------+							
1507 - 1607	F650				77754-BZ160-	1		

FIG.77-51 FUEL TANK & TUBE

PROD_DATE	MODELS	SPEC CODE	DESCRIPTION	R/P	PART NUMBER	QYT	REV_REF FR	REV_REF TO
	+----------+							
	| 77754 | HOSE, CHARCOAL CANISTER OUTLET, NO.1							
	CONTINUED--+							
1507 - 1901	F653				77754-BZ170-	1		
1901 -	F65#				77754-BZ170-	1		
	+----------+							
	| 77754B | HOSE, CHARCOAL CANISTER OUTLET							
	+----------+							
1111 - 1507	F65#		L=75		77759-BZ040-	1		
	+----------+							
	| 77759 | HOSE, CHARCOAL CANISTER							
	+----------+							
1111 - 1507	F65#		L=133		77759-BZ021-	1		
	+----------+							
	| 77775 | GUIDE, CHARCOAL CANISTER OUTLET							
	+----------+							
1507 - 1901	F653				77775-B0010-	1		
1901 -	F65#				77775-B0010-	1		
	+----------+							
	| 77779 | TUBE, CHARCOAL CANISTER OUTLET							
	+----------+							
1111 - 1507	F65#				77779-BZ010-	1		
	+----------+							
	| 87268T | PROTECTOR, NO.1							
	+----------+							
1312 - 1507	F65#				87268-BZ020-	1		
1507 - 1901	F65#				87268-BZ020-	1		
1901 -	F65#				87268-BZ020-	1		

FIG. 78-51 ACCELERATOR LINK

(1111-1507) ; (1507-1607)F650

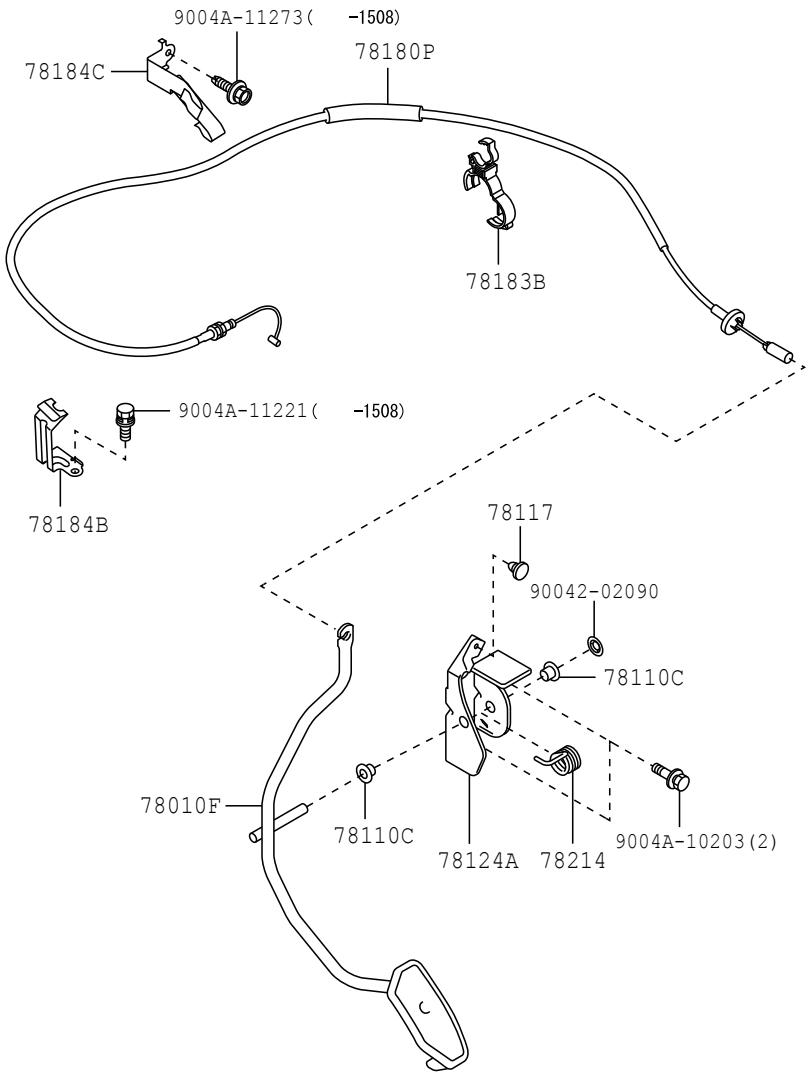

7851

781357-B

FIG. 78-51 ACCELERATOR LINK

(1507-)

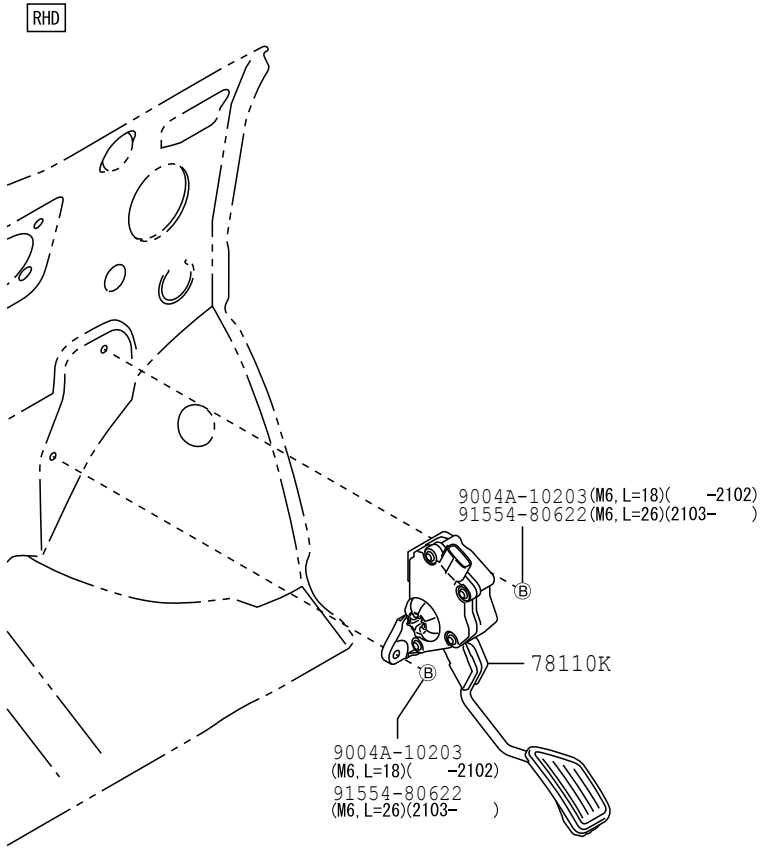

7851

781506-A

PROD_DATE	MODELS	SPEC CODE	DESCRIPTION	R/P	PART NUMBER	QYT	REV_REF FR	REV_REF TO
	+----------+							
	| 78010F | PEDAL ASSY, ACCELERATOR							
	+----------+							
1111 - 1507	F65#				78101-BZ130-	1		
1507 - 1607	F650				78101-BZ170-	1		
	+----------+							
	| 78110C | BUSH (FOR ACCELERATOR PEDAL ROD)							
	+----------+							
1111 - 1507	F65#				9004A-38011-	2		
1507 - 1607	F650				9004A-38011-	2		
	+----------+							
	| 78110K | ROD ASSY, ACCELERATOR PEDAL(W/SENSOR)							
	+----------+							
1507 - 1603	F653				78110-BZ030-	1		
1604 - 1901	F653				78110-BZ031-	1		
1901 -	F65#				78110-BZ031-	1		
	+----------+							
	| 78117 | CUSHION (FOR ACCELERATOR ROD)							
	+----------+							
1111 - 1507	F65#				9004A-54009-	1		
1507 - 1607	F650				9004A-54009-	1		
	+----------+							
	| 78124A | BRACKET, ACCELERATOR PEDAL ROD							
	+----------+							
1111 - 1507	F65#				78124-BZ080-	1		
1507 - 1607	F650				78124-BZ080-	1		
	+----------+							
	| 78180P | CABLE ASSY, ACCELERATOR CONTROL							
	+----------+							
1111 - 1507	F650				78180-BZ180-	1		
1111 - 1507	F651..E4AT				78180-BZ190-	1		
1111 - 1507	F651..5F				78180-BZ210-	1		
1507 - 1607	F650				78180-BZ310-	1		
	+----------+							
	| 78183B | CLAMP, ACCELERATOR CONTROL CABLE							
	+----------+							
1111 - 1507	F65#				90044-64879-	1		

FIG.78-51 ACCELERATOR LINK

PROD_DATE	MODELS	SPEC CODE	DESCRIPTION	R/P	PART NUMBER	QYT	REV_REF FR	REV_REF TO
	+----------+							
	| 78183B | CLAMP, ACCELERATOR CONTROL CABLE							
	CONTINUED--+							
1507 - 1607	F650				9004A-46314-	1		
				#	(90044-64634-)	1		
	+----------+							
	| 78184B | BRACKET, ACCELERATOR CONTROL CABLE							
	+----------+							
1111 - 1507	F651				78184-BZ070-	1		
	+----------+							
	| 78184C | BRACKET, ACCELERATOR CONTROL CABLE							
	+----------+							
1111 - 1507	F651..E4AT				31341-BZ010-	1		
	+----------+							
	| 78214 | SPRING, ACCELERATOR LINK ROD RETURN							
	+----------+							
1111 - 1507	F65#				78214-BZ010-	1		
1507 - 1607	F650				78214-BZ010-	1		

FIG.81-01 HEADLAMP

(1111-1507)

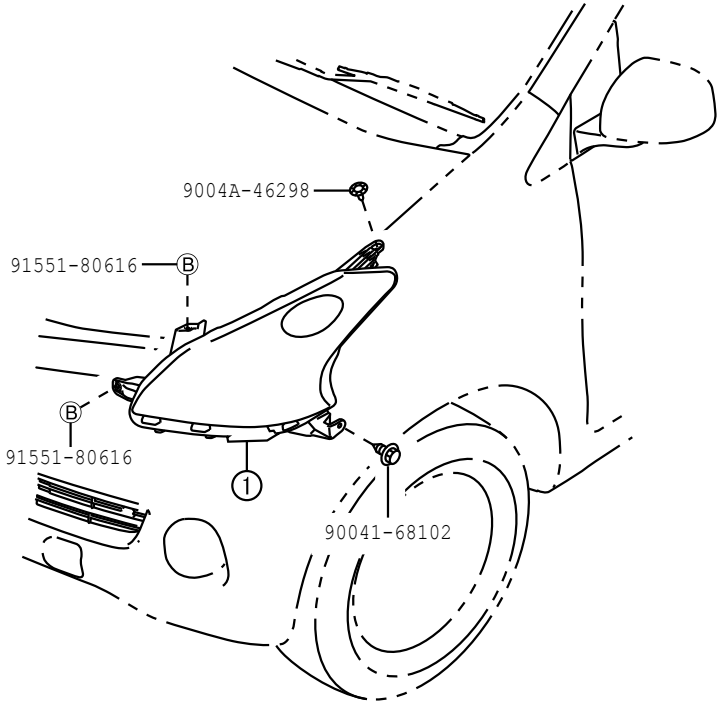

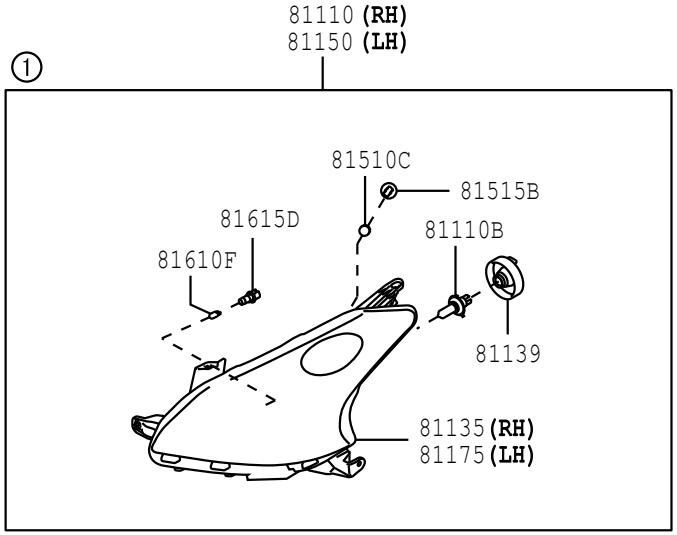

8101

815866-A

FIG.81-01 HEADLAMP

(1507-1901)

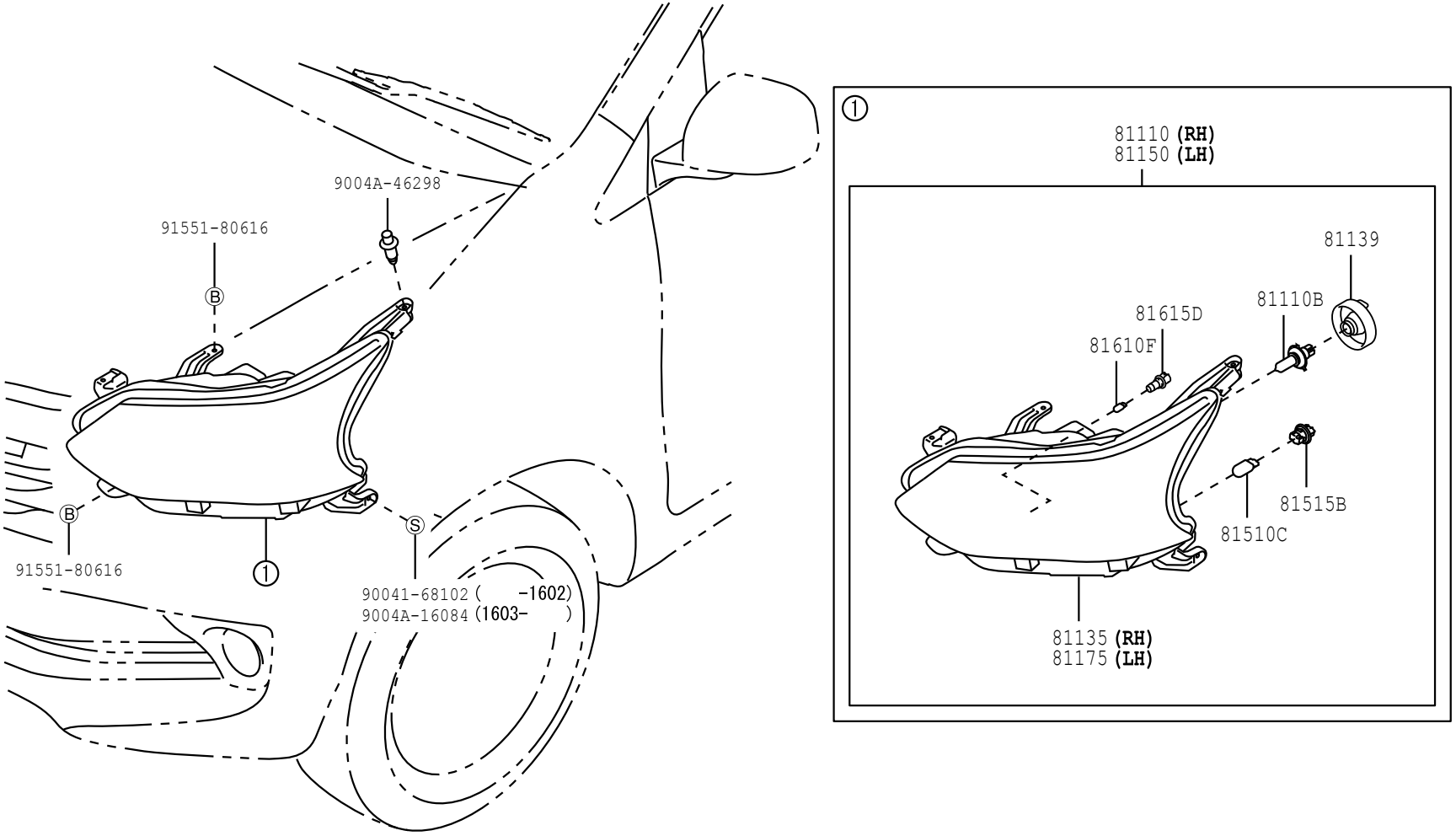

8101

817469-B

FIG.81-01 HEADLAMP

(1901-)

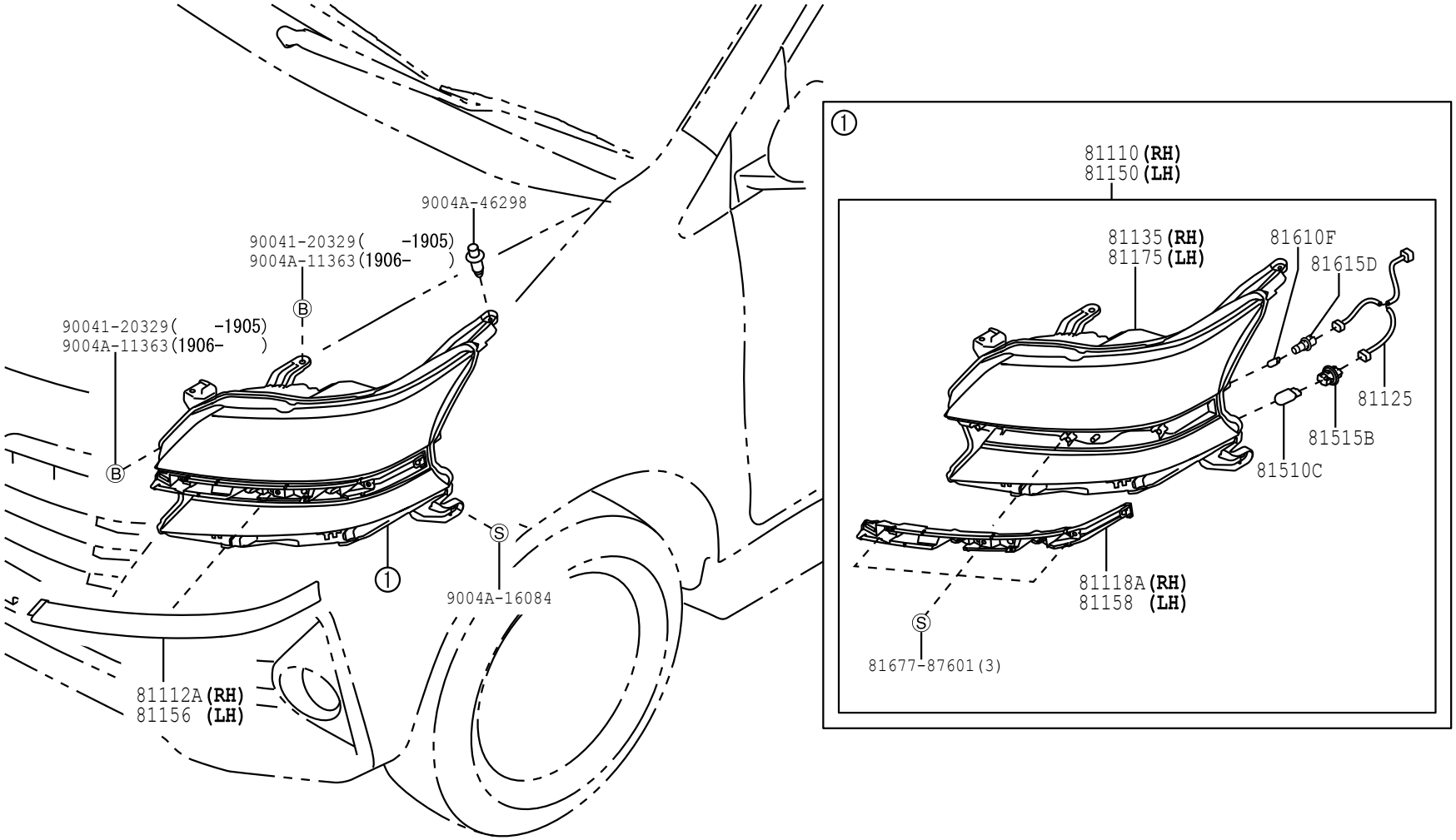

8101

818735-D

PROD_DATE	MODELS	SPEC CODE	DESCRIPTION	R/P	PART NUMBER	QYT	REV_REF FR	REV_REF TO
	+----------+							
	| 81110 | HEADLAMP ASSY, RH							
	+----------+							
1111 - 1507	F65#				81110-BZ180-	1		
1507 - 1607	F650				81110-BZ390-	1		
1507 - 1901	F653				81110-BZ390-	1		
1901 -	F65#				81110-BZ430-	1		
	+----------+							
	| 81110B | BULB(FOR HEADLAMP, NO.1)							
	+----------+							
1111 - 1507	F65#		12V 60/55W,*HAL *WH		90981-22004-	2		
1507 - 1607	F650				9004A-81032-	2		
1507 - 1901	F653				9004A-81032-	2		
	+----------+							
	| 81112A | RIM, HEADLAMP, RH							
	+----------+							
1901 -	F65#				81116-BZ020-	1		
	+----------+							
	| 81118A | BRACKET, HEADLAMP, RH							
	+----------+							
1901 -	F65#				81118-BZ010-	1		
	+----------+							
	| 81125 | CORD, HEADLA							
	+----------+ MP							
1901 -	F65#				81125-BZ020-	2		
	+----------+							
	| 81135 | UNIT ASSY, HEADLAMP, RH							
	+----------+							
1111 - 1507	F65#				81130-BZ140-	1		
1507 - 1607	F650				81130-BZ260-	1		
1507 - 1901	F653				81130-BZ260-	1		
1901 -	F65#				81130-BZ380-	1		
	+----------+							
	| 81139 | COVER, HEADLAMP SOCKET							
	+----------+							
1111 - 1507	F65#				81139-B2010-	2		
1507 - 1607	F650				81139-B2010-	2		
1507 - 1901	F653				81139-B2010-	2		

FIG.81-01 HEADLAMP

PROD_DATE	MODELS	SPEC CODE	DESCRIPTION	R/P	PART NUMBER	QYT	REV_REF FR	REV_REF TO
	+----------+							
	| 81150 | HEADLAMP ASSY, LH							
	+----------+							
1111 - 1507	F65#				81150-BZ180-	1		
1507 - 1607	F650				81150-BZ390-	1		
1507 - 1901	F653				81150-BZ390-	1		
1901 -	F65#				81150-BZ430-	1		
	+----------+							
	| 81156 | RIM, HEADLAMP, LH							
	+----------+							
1901 -	F65#				81156-BZ020-	1		
	+----------+							
	| 81158 | BRACKET, HEADLAMP, LH							
	+----------+							
1901 -	F65#				81158-BZ010-	1		
	+----------+							
	| 81175 | UNIT ASSY, HEADLAMP, LH							
	+----------+							
1111 - 1507	F65#				81170-BZ140-	1		
1507 - 1607	F650				81170-BZ260-	1		
1507 - 1901	F653				81170-BZ260-	1		
1901 -	F65#				81170-BZ380-	1		
	+----------+							
	| 81510C | BULB (FOR FRONT TURN SIGNAL LAMP)							
	+----------+							
1111 - 1507	F65#		12V 21W		90049-51179-	2		
1507 - 1607	F650		12V 21W AMBER		9004A-81031-	2		
1507 - 1901	F653		12V 21W AMBER		9004A-81031-	2		
1901 -	F65#		12V 21W AMBER		9004A-81031-	2		
	+----------+							
	| 81515B | SOCKET, FRONT TURN SIGNAL LAMP							
	+----------+							
1111 - 1507	F65#				90075-60028-	2		
1507 - 1607	F650				90075-60028-	2		
1507 - 1901	F653				90075-60028-	2		
1901 -	F65#				90075-60028-	2		

FIG.81-01 HEADLAMP

PROD_DATE	MODELS	SPEC CODE	DESCRIPTION	R/P	PART NUMBER	QYT	REV_REF FR	REV_REF TO
	+----------+							
	| 81610F | BULB(FOR CLEARANCE LAMP)							
	+----------+							
1111 - 1507	F65#		12V 5W T10		90981-11013-	2		
1507 - 1607	F650		12V 5W T10		9004A-81030-	2		
1507 - 1901	F653		12V 5W T10		9004A-81030-	2		
1901 -	F65#		12V 5W T10		9004A-81030-	2		
	+----------+							
	| 81615D | SOCKET, CLEARANCE LAMP							
	+----------+							
1111 - 1507	F65#				9004C-82001-	2		
1507 - 1607	F650				9004C-82001-	2		
1507 - 1901	F653				9004C-82001-	2		
1901 -	F65#				81128-B2090-	2		

(1507-1901)F653..STD ; (1610-1901)LO ; (1901-)

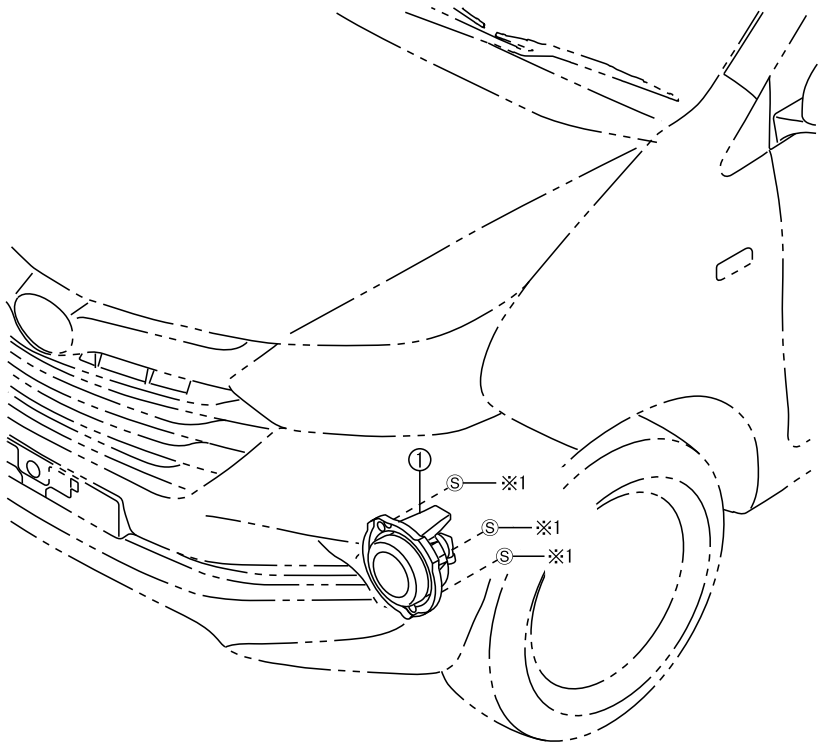

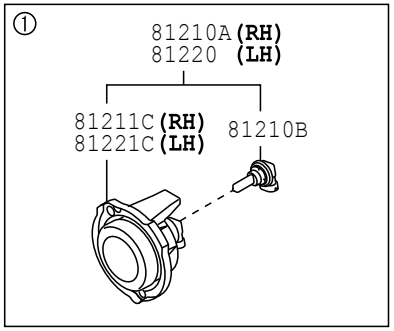

※1 93567-15014 (-1609)
9004A-16036 (1610-)

8102

817471-A

FIG.81-02 FOG LAMP

PROD_DATE	MODELS	SPEC CODE	DESCRIPTION	R/P	PART NUMBER	QYT	REV_REF FR	REV_REF TO
	+----------+							
	| 81210A | LAMP ASSY, FOG, RH							
	+----------+							
1507 - 1901	F653..STD				81210-BZ160-	1		
1610 - 1901	F653..LO				81210-BZ160-	1		
1901 -	F65#				81210-BZ160-	1		
	+----------+							
	| 81210B | BULB, FOG LA							
	+----------+ MP							
1507 - 1901	F653..STD		12V 19W H16		90049-51185-	2		
1610 - 1901	F653..LO		12V 19W H16		90049-51185-	2		
1901 -	F65#		12V 19W H16		90049-51185-	2		
	+----------+							
	| 81211C | LAMP UNIT, FOG LAMP, RH							
	+----------+							
1507 - 1901	F653..STD				81211-BZ060-	1		
1610 - 1901	F653..LO				81211-BZ060-	1		
1901 -	F65#				81211-BZ060-	1		
	+----------+							
	| 81220 | LAMP ASSY, FOG, LH							
	+----------+							
1507 - 1901	F653..STD				81220-BZ160-	1		
1610 - 1901	F653..LO				81220-BZ160-	1		
1901 -	F65#				81220-BZ160-	1		
	+----------+							
	| 81221C | LAMP UNIT, FOG LAMP, LH							
	+----------+							
1507 - 1901	F653..STD				81221-BZ060-	1		
1610 - 1901	F653..LO				81221-BZ060-	1		
1901 -	F65#				81221-BZ060-	1		

FIG. 81-11 REAR COMBINATION LAMP

(1111-1507)

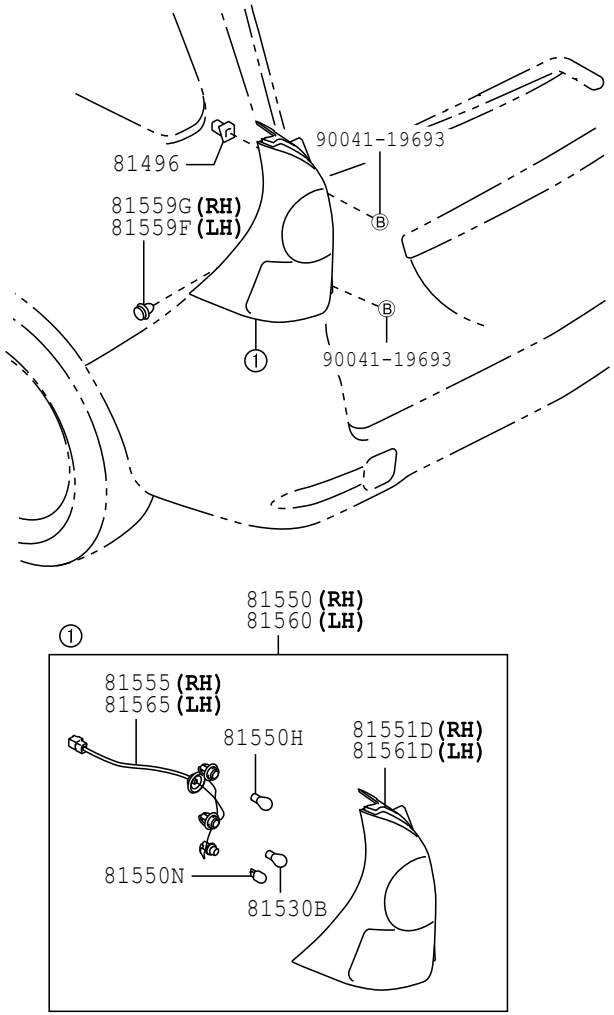

8111

815869-C

FIG. 81-11 REAR COMBINATION LAMP

(1507-1901)

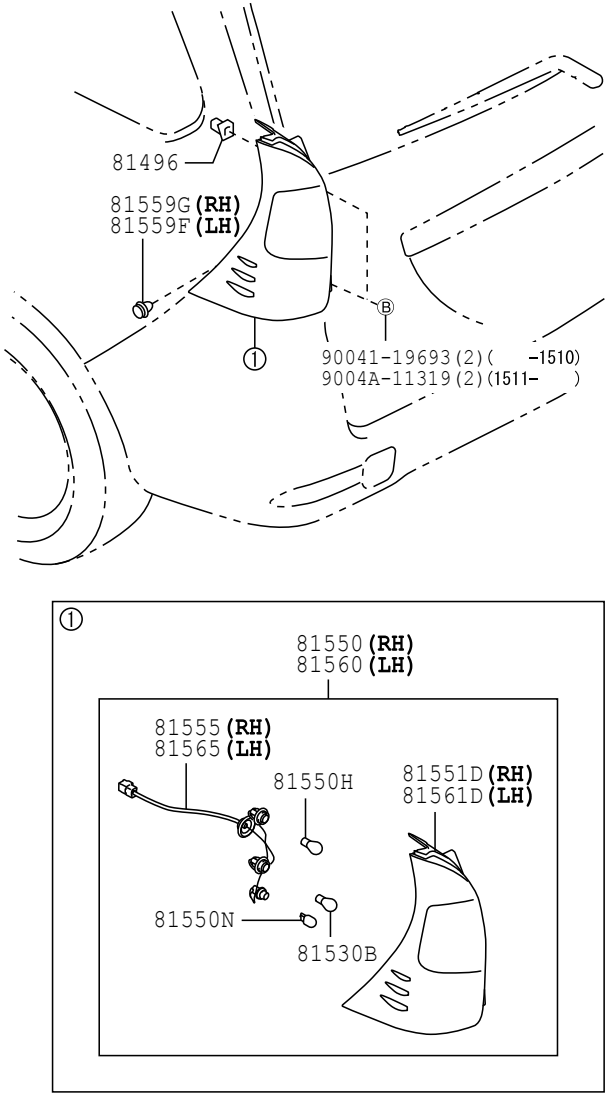

8111

817473-A

FIG. 81-11 REAR COMBINATION LAMP

(1901-)

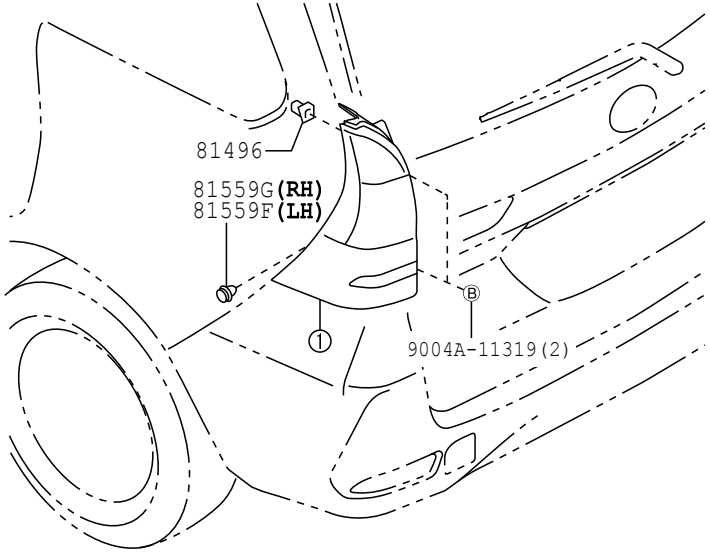

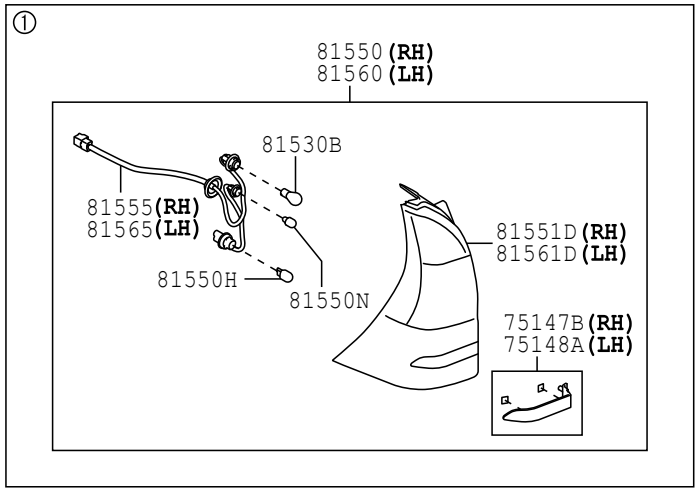

8111

818782-B

FIG. 81-11 REAR COMBINATION LAMP

PROD_DATE	MODELS	SPEC CODE	DESCRIPTION	R/P	PART NUMBER	QYT	REV_REF FR	REV_REF TO
	75147B	PLATE, REAR COMBINATION LAMP, RH						
1901 -	F65#				C6419-BZ010-	1		
	75148A	PLATE, REAR COMBINATION LAMP, LH						
1901 -	F65#				C6419-BZ030-	1		
	81496	GUIDE, REAR COMBINATION LAMP						
1111 - 1507	F65#				81496-B4010-	2		
1507 - 1510	F65#				81496-B4010-	2		
1511 - 1607	F650				81496-BZ010-	2		
				#	(81496-B4010-)	1		
1511 - 1901	F653				81496-BZ010-	2		
				#	(81496-B4010-)	1		
1901 -	F65#				81496-BZ010-	2		
				#	(81496-B4010-)	1		
	81530B	BULB, REAR TURN SIGNAL LAMP						
1111 - 1507	F65#		12V 21W		9004A-81005-	2		
				#	(90049-51148-)	1		
1507 - 1607	F650		12V 21W		9004A-81005-	2		
				#	(90049-51148-)	1		
1507 - 1901	F653		12V 21W		9004A-81005-	2		
				#	(90049-51148-)	1		
1901 -	F65#		12V 21W		9004A-81050-	2		
	81550	LAMP ASSY, REAR COMBINATION, RH						
1111 - 1507	F65#				81550-BZ190-	1		
1507 - 1607	F650				81550-BZ220-	1		
1507 - 1901	F653				81550-BZ220-	1		
1901 -	F65#				81550-BZ350-	1		

PROD_DATE	MODELS	SPEC CODE	DESCRIPTION	R/P	PART NUMBER	QYT	REV_REF FR	REV_REF TO
	81550H BULB, TAIL & STOP LAMP							
1111 - 1507	F65#				90049-51161-	2		
1507 - 1607	F650		12V 21W		9004A-81027-	2		
1507 - 1901	F653		12V 21W		9004A-81027-	2		
1901 -	F65#		12V 21/5W		9004A-81025-	2		
	81550N BULB, BACK UP LAMP							
1111 - 1507	F65#		12V 16W		90981-11055-	2		
1507 - 1607	F650		12V 16W		9004A-81026-	2		
1507 - 1901	F653		12V 16W		9004A-81026-	2		
1901 -	F65#		12V 16W		9004A-81023-	2		
	81551D LENS & BODY, REAR COMBINATION LAMP, RH							
1111 - 1507	F65#				81551-BZ090-	1		
1507 - 1607	F650				81551-BZ240-	1		
1507 - 1901	F653				81551-BZ240-	1		
1901 -	F65#				81551-BZ350-	1		
	81555 SOCKET & WIRE SUB-ASSY, REAR COMBINATION LAMP, RH							
1111 - 1507	F65#				81555-BZ060-	1		
1507 - 1607	F650				81555-BZ100-	1		
1507 - 1901	F653				81555-BZ100-	1		
1901 -	F65#				81555-BZ190-	1		
	81559F CLIP, RR COMBINATION LAMP, LH							
1111 - 1507	F65#				81559-B2020-	1		
1507 - 1607	F650				81559-B2020-	1		
1507 - 1901	F653				81559-B2020-	1		
1901 -	F65#				81559-B2020-	1		

FIG.81-11 REAR COMBINATION LAMP

PROD_DATE	MODELS	SPEC CODE	DESCRIPTION	R/P	PART NUMBER	QYT	REV_REF FR	REV_REF TO
	81559G CLIP, RR COMBINATION LAMP, RH							
1111 - 1507	F65#				81559-B2020-	1		
1507 - 1607	F650				81559-B2020-	1		
1507 - 1901	F653				81559-B2020-	1		
1901 -	F65#				81559-B2020-	1		
	81560 LAMP ASSY, REAR COMBINATION, LH							
1111 - 1507	F65#				81560-BZ190-	1		
1507 - 1607	F650				81560-BZ220-	1		
1507 - 1901	F653				81560-BZ220-	1		
1901 -	F65#				81560-BZ340-	1		
	81561D LENS & BODY, REAR COMBINATION LAMP, LH							
1111 - 1507	F65#				81561-BZ090-	1		
1507 - 1607	F650				81561-BZ240-	1		
1507 - 1901	F653				81561-BZ240-	1		
1901 -	F65#				81561-BZ350-	1		
	81565 SOCKET & WIRE SUB-ASSY, REAR COMBINATION LAMP, LH							
1111 - 1507	F65#				81565-BZ010-	1		
1507 - 1607	F650				81565-BZ050-	1		
1507 - 1901	F653				81565-BZ050-	1		
1901 -	F65#				81565-BZ070-	1		

FIG. 81-13 REAR LICENSE PLATE LAMP

(1111-)

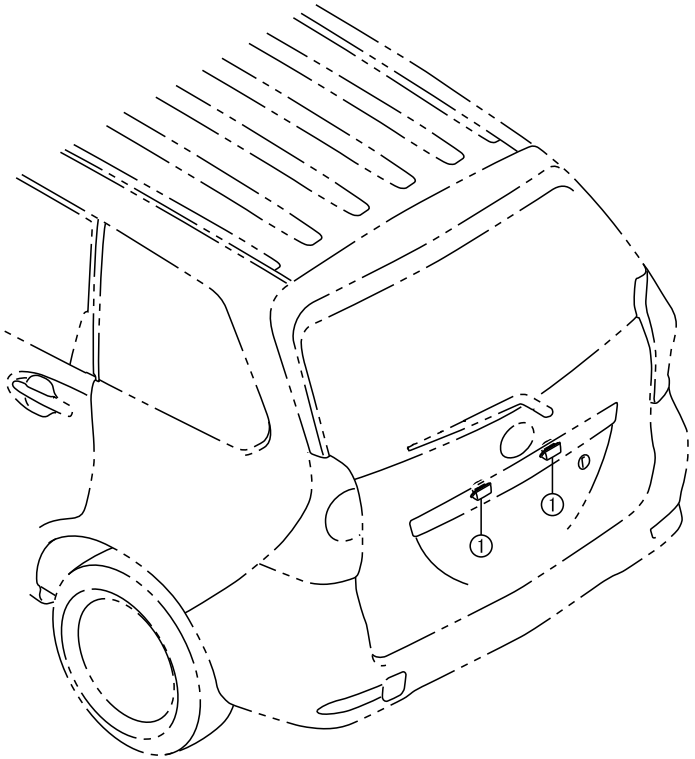

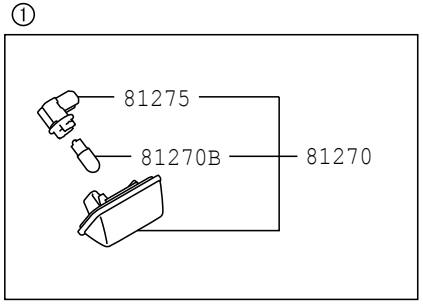

8113

815870

FIG. 81-13 REAR LICENSE PLATE LAMP

PROD_DATE	MODELS	SPEC CODE	DESCRIPTION	R/P	PART NUMBER	QYT	REV_REF FR	REV_REF TO
	+----------+							
	| 81270 | LAMP ASSY, LICENSE PLATE							
	+----------+							
1111 - 1507	F65#				81270-BZ010-	2		
1507 - 1607	F650				81270-BZ010-	2		
1507 - 1901	F653				81270-BZ010-	2		
1901 -	F65#				81270-BZ010-	2		
	+----------+							
	| 81270B | BULB (FOR LICENSE PLATE LAMP)							
	+----------+							
1111 - 1507	F65#		12V 5W		9004A-81006-	2		
				#	(90981-11013-)	1		
1507 - 1607	F650		12V 5W		9004A-81006-	2		
				#	(90981-11013-)	1		
1507 - 1901	F653		12V 5W		9004A-81006-	2		
				#	(90981-11013-)	1		
1901 -	F65#		12V 5W		9004A-81006-	2		
				#	(90981-11013-)	1		
	+----------+							
	| 81275 | SOCKET AND WIRE, LICENSE PLATE LAMP							
	+----------+							
1111 - 1507	F65#				81275-12501-	2		
1507 - 1607	F650				81275-12501-	2		
1507 - 1901	F653				81275-12501-	2		
1901 -	F65#				81275-12501-	2		

FIG.81-15 REFLEX REFLECTOR

(1111-)

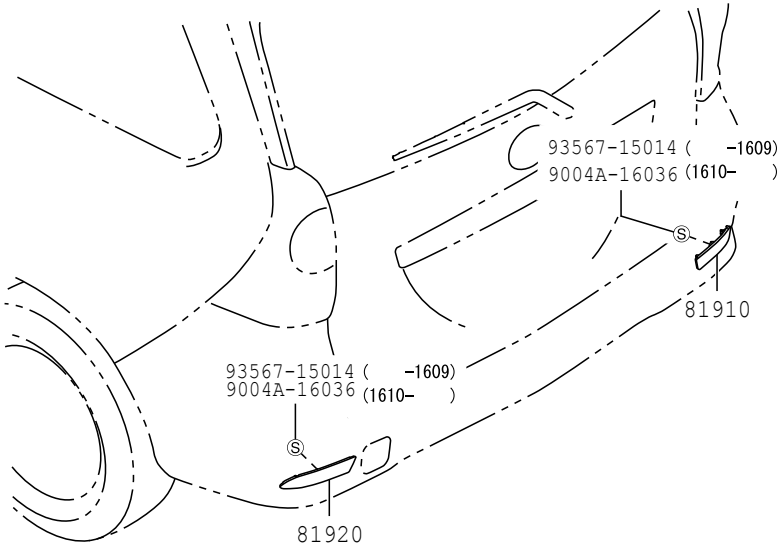

8115

815872-A

FIG.81-15 REFLEX REFLECTOR

PROD_DATE	MODELS	SPEC CODE	DESCRIPTION	R/P	PART NUMBER	QYT	REV_REF FR	REV_REF TO
	+----------+							
	| 81910 |		REFLECTOR ASSY, REFLEX, RH					
	+----------+							
1111 - 1507	F65#				81910-BZ090-	1		
1507 - 1607	F650				81910-BZ090-	1		
1507 - 1901	F653				81910-BZ090-	1		
1901 -	F65#				81910-BZ090-	1		
	+----------+							
	| 81920 |		REFLECTOR ASSY, REFLEX, LH					
	+----------+							
1111 - 1507	F65#				81920-BZ090-	1		
1507 - 1607	F650				81920-BZ090-	1		
1507 - 1901	F653				81920-BZ090-	1		
1901 -	F65#				81920-BZ090-	1		

(1111-)

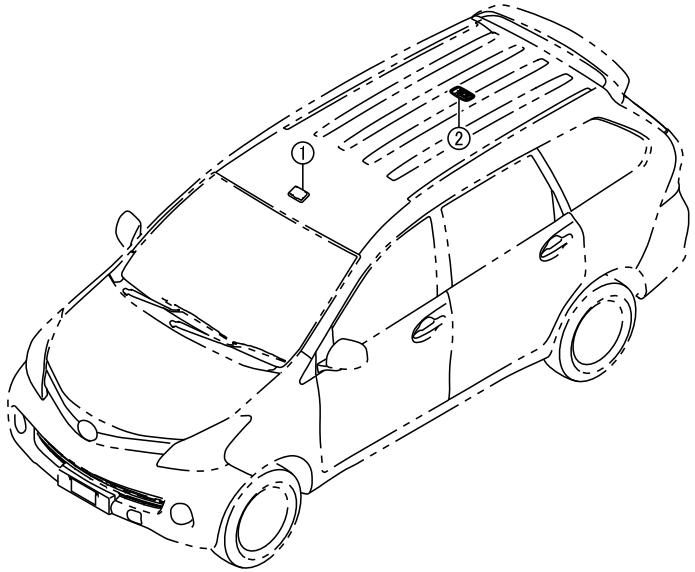

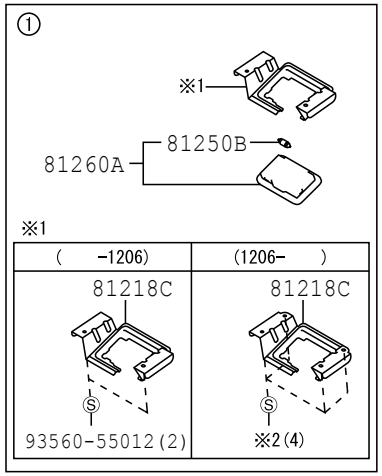

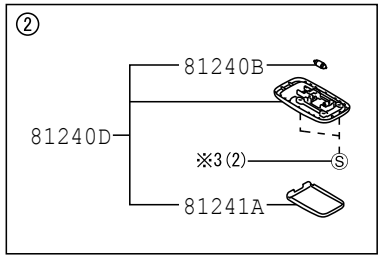

※2 93560-55012(-1511)
9004A-16085(1512-)

※3 93567-15014(-1701)
9004A-16036(1702-)

8121

815875-C

FIG.81-21 INTERIOR LAMP

PROD_DATE	MODELS	SPEC CODE	DESCRIPTION	R/P	PART NUMBER	QYT	REV_REF FR	REV_REF TO
	+----------+							
	| 81218C | BRACKET, MAP LAMP							
	+----------+							
1111 - 1206	F65#				63231-BZ030-	1		
1206 - 1507	F65#				63231-BZ031-	1		
1507 - 1901	F65#				63231-BZ031-	1		
1901 -	F65#				63231-BZ031-	1		
	+----------+							
	| 81240B | BULB, ROOM LAMP, NO.1							
	+----------+							
1111 - 1507	F65#		12V 8W		90049-51153-	1		
1507 - 1901	F65#		12V 8W		90049-51153-	1		
1901 -	F65#		12V 8W		90049-51153-	1		
	+----------+							
	| 81240D | LAMP ASSY, ROOM, NO.2							
	+----------+							
1111 - 1507	F650..STD		LT.GRAY(TRIM1#)		81240-BZ010-B1	1		
1111 - 1507	F651		LT.GRAY(TRIM4#)		81240-BZ010-B1	1		
1111 - 1507	F650..LO		LT.GRAY(TRIM4#)		81240-BZ010-B1	1		
1507 - 1607	F650..STD		LT.GRAY(TRIM1#)		81240-BZ010-B1	1		
1507 - 1901	F653		LT.GRAY(TRIM4#)		81240-BZ010-B1	1		
1507 - 1901	F650..LO		LT.GRAY(TRIM4#)		81240-BZ010-B1	1		
1901 - 2007	F65#		LT.GRAY(TRIM4#)		81240-BZ010-B1	1		
2007 -	F65#		LT.GRAY(TRIM4#)		81240-BZ010-B0	1		
	+----------+							
	| 81241A | LENS, ROOM LAMP, NO.2							
	+----------+							
1111 - 1507	F65#				81241-BZ010-	1		
1507 - 1901	F65#				81241-BZ010-	1		
1901 -	F65#				81241-BZ010-	1		
	+----------+							
	| 81250B | BULB, ROOM LAMP, NO.2							
	+----------+							
1111 - 1507	F65#		12V 10W		84999-B4010-	1		
1507 - 1901	F65#		12V 10W		84999-B4010-	1		

FIG.81-21 INTERIOR LAMP

PROD_DATE	MODELS	SPEC CODE	DESCRIPTION	R/P	PART NUMBER	QYT	REV_REF FR	REV_REF TO
	+----------+							
	| 81250B | BULB, ROOM LAMP, NO.2							
	CONTINUED--+							
1901 -	F65#		12V 10W		84999-B4010-	1		
	+----------+							
	| 81260A | LAMP ASSY, M							
	+----------+ AP							
1111 - 1507	F650..STD		LT.GRAY(TRIM1#)		81240-B4010-B0	1		
1111 - 1507	F651		LT.GRAY(TRIM4#)		81240-B4010-B0	1		
1111 - 1507	F650..LO		LT.GRAY(TRIM4#)		81240-B4010-B0	1		
1507 - 1607	F650..STD		LT.GRAY(TRIM1#)		81240-B0020-B0	1		
1507 - 1901	F653		LT.GRAY(TRIM4#)		81240-B0020-B0	1		
1507 - 1901	F650..LO		LT.GRAY(TRIM4#)		81240-B0020-B0	1		
1901 -	F65#		LT.GRAY(TRIM4#)		81240-B0020-B0	1		

(1111-)

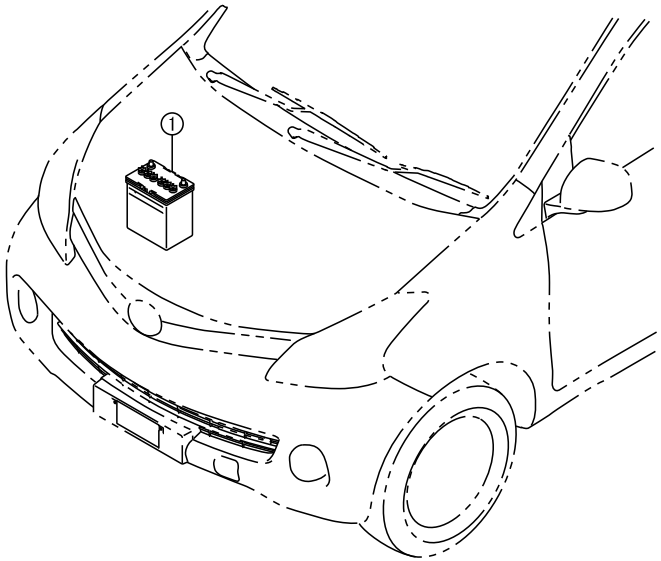

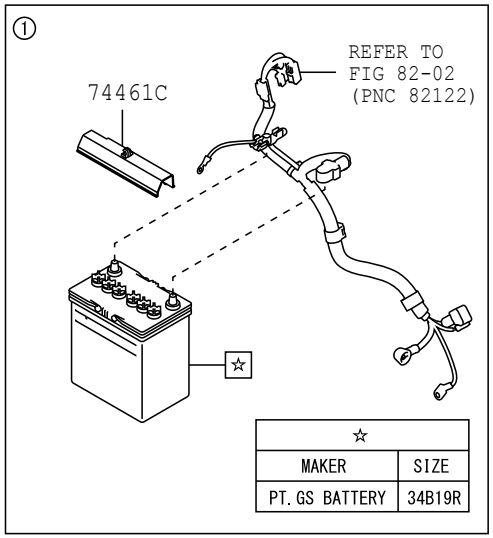

8201

82A659-A

FIG.82-01 BATTERY & BATTERY CABLE

PROD_DATE	MODELS	SPEC CODE	DESCRIPTION	R/P	PART NUMBER	QYT	REV_REF FR	REV_REF TO
	+----------+ | 74461C | COVER, BATTERY +----------+							
1111 - 1305	F65#				58441-BZ010-	1		
1310 - 1507	F651				58441-BZ010-	1		

FIG. 82-02 WIRING & CLAMP

(1111-1507)F651

ENGINE ILLUST NO. 1 OF 8

K3VE

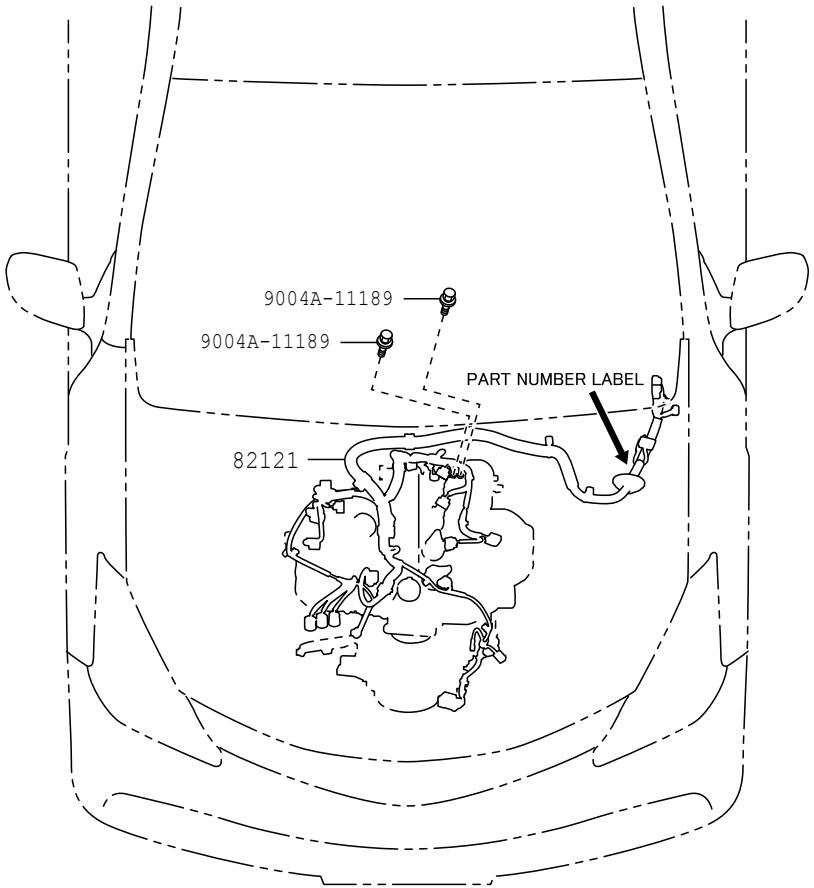

8202 827881

FIG. 82-02 WIRING & CLAMP

(1111-1507)F650

ENGINE ILLUST NO. 1 OF 8

EJVE

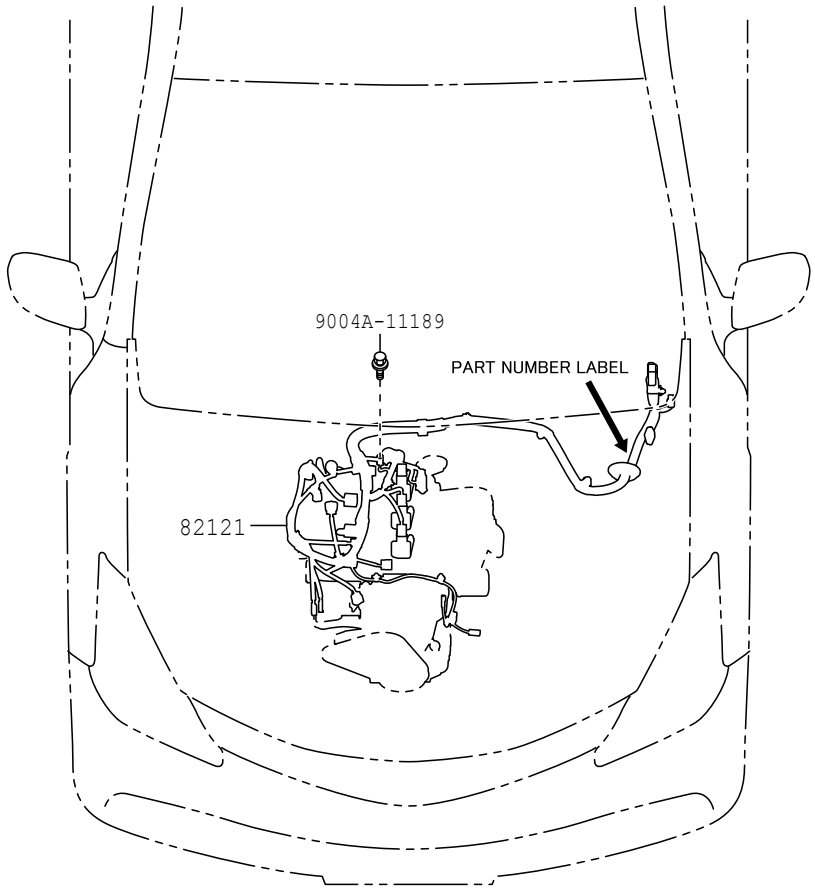

8202 827882

FIG.82-02 WIRING & CLAMP

(1111-1507)

ENGINE ROOM ILLUST NO. 2 OF 8

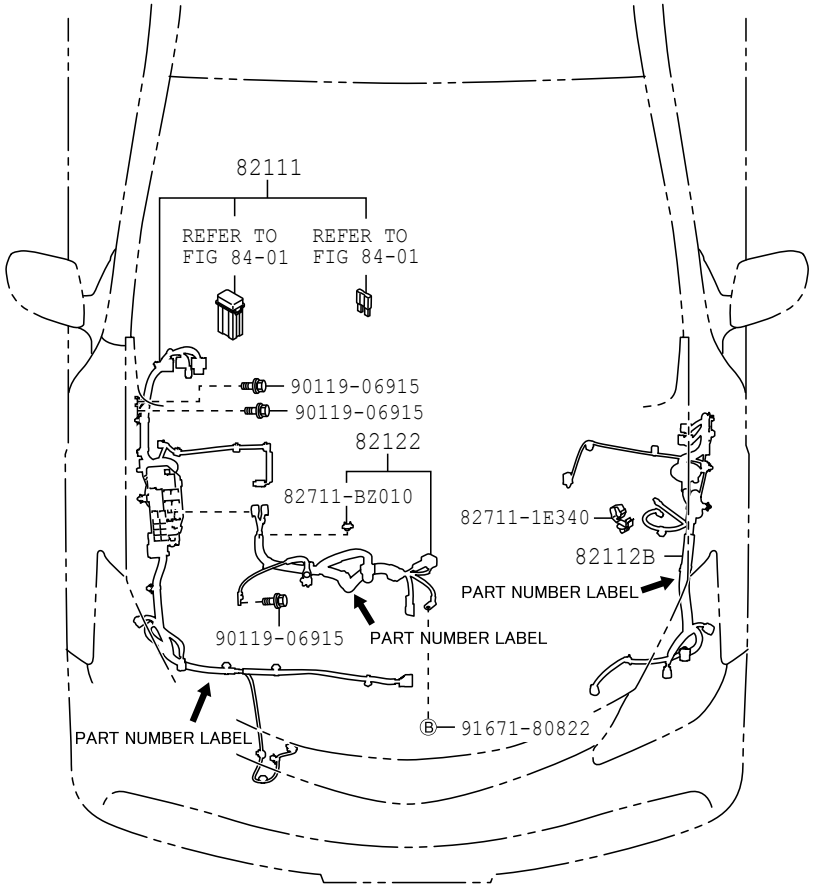

8202 827883-A

FIG.82-02 WIRING & CLAMP

(1111-1507)

INSTRUMENT PANEL ILLUST NO. 3 OF 8

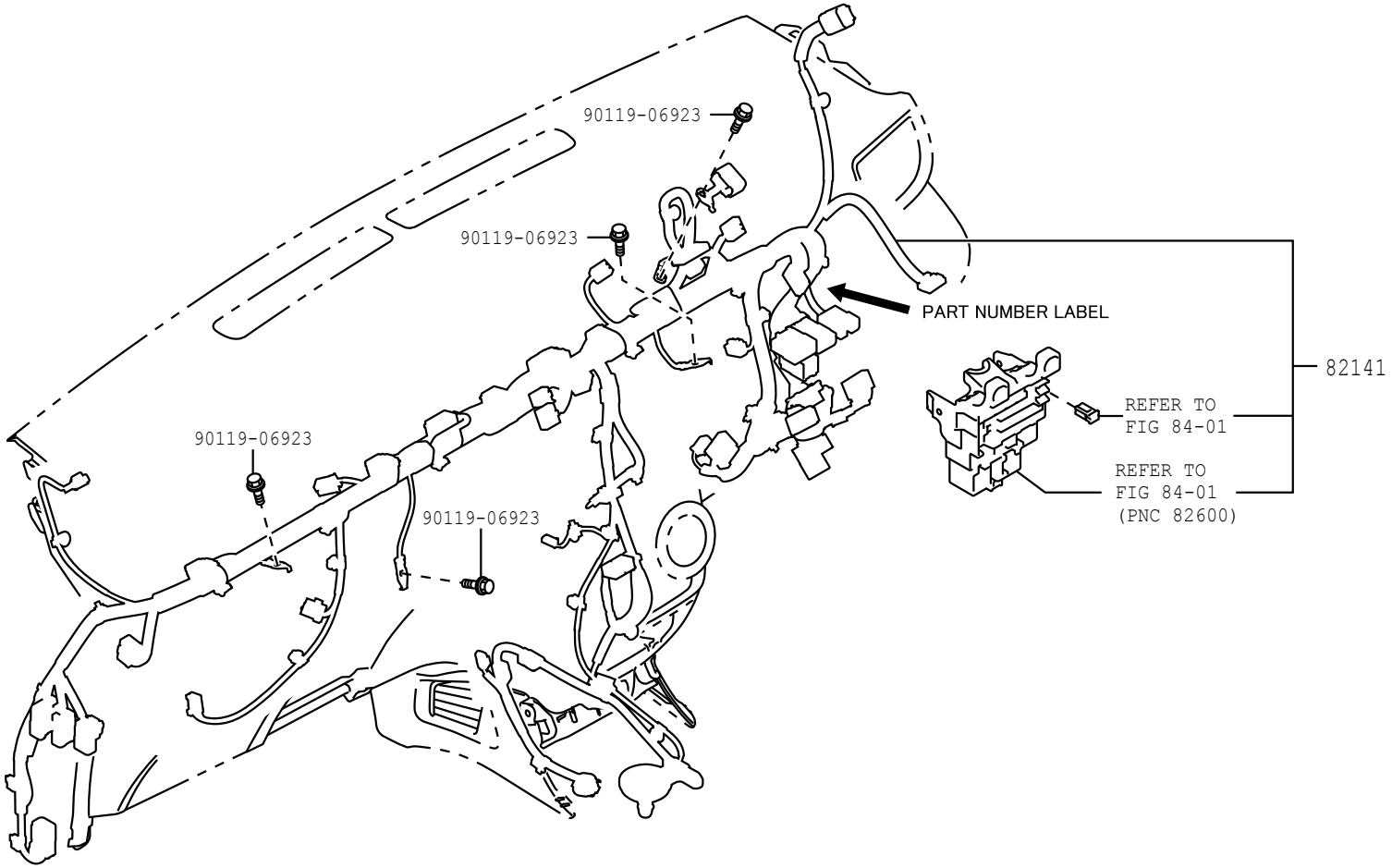

8202

827884

FIG.82-02 WIRING & CLAMP

(1111-)

DOOR & ROOF ILLUST NO. 4 OF 8

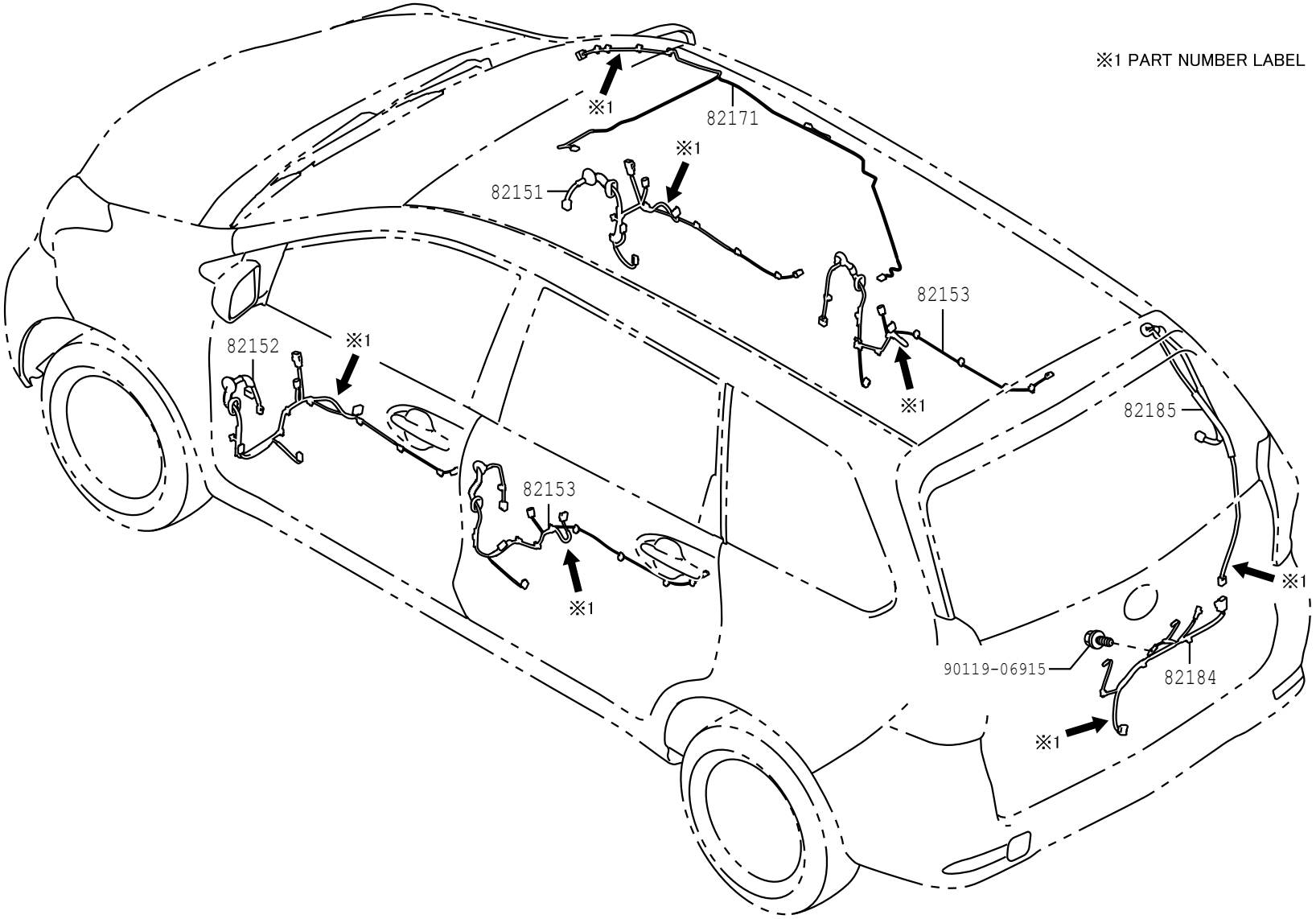

8202 827885

FIG.82-02 WIRING & CLAMP

(1111-1507)

FLOOR ILLUST NO. 5 OF 8

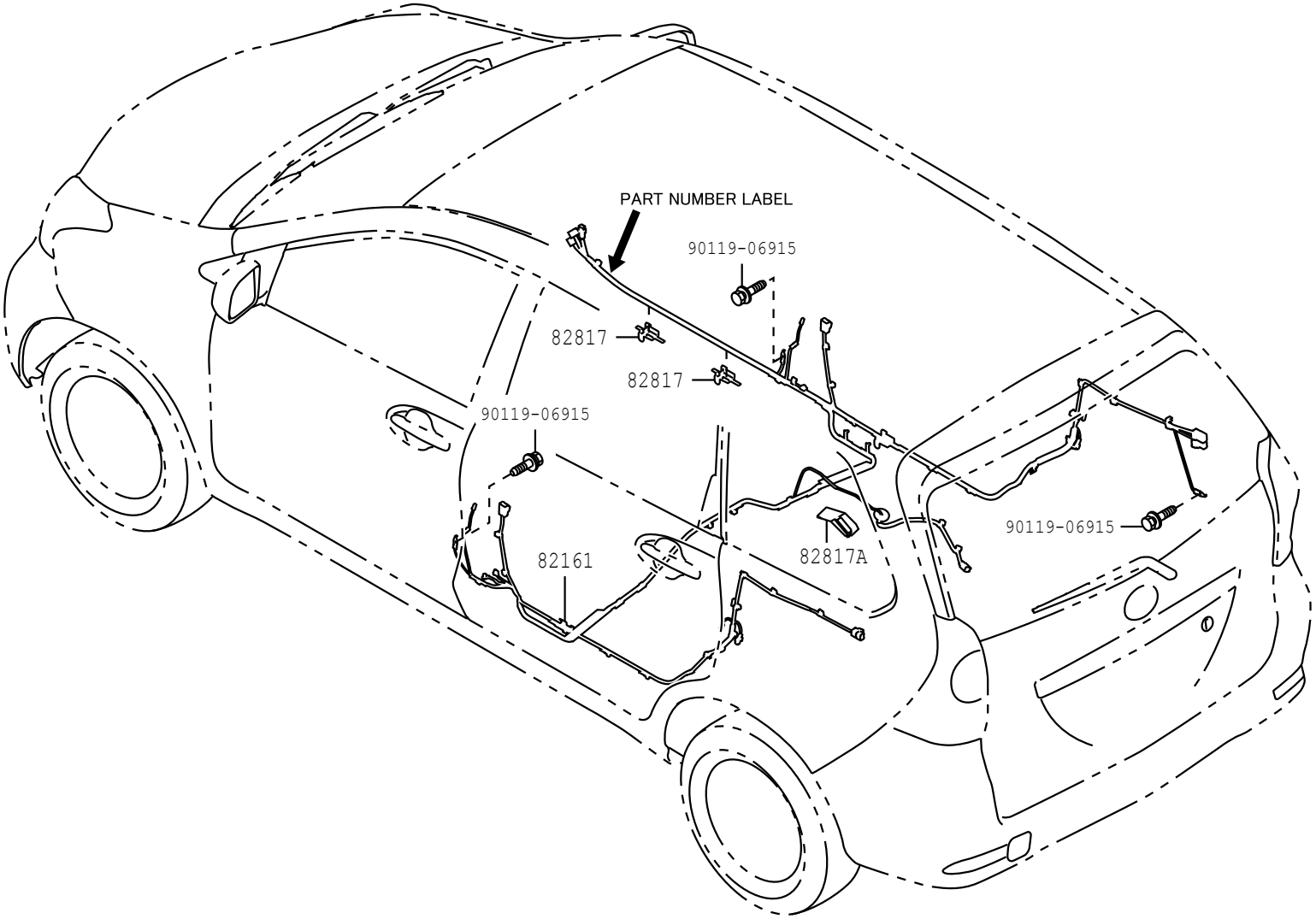

8202

827886

(1111-)

FUEL ILLUST NO. 6 OF 8

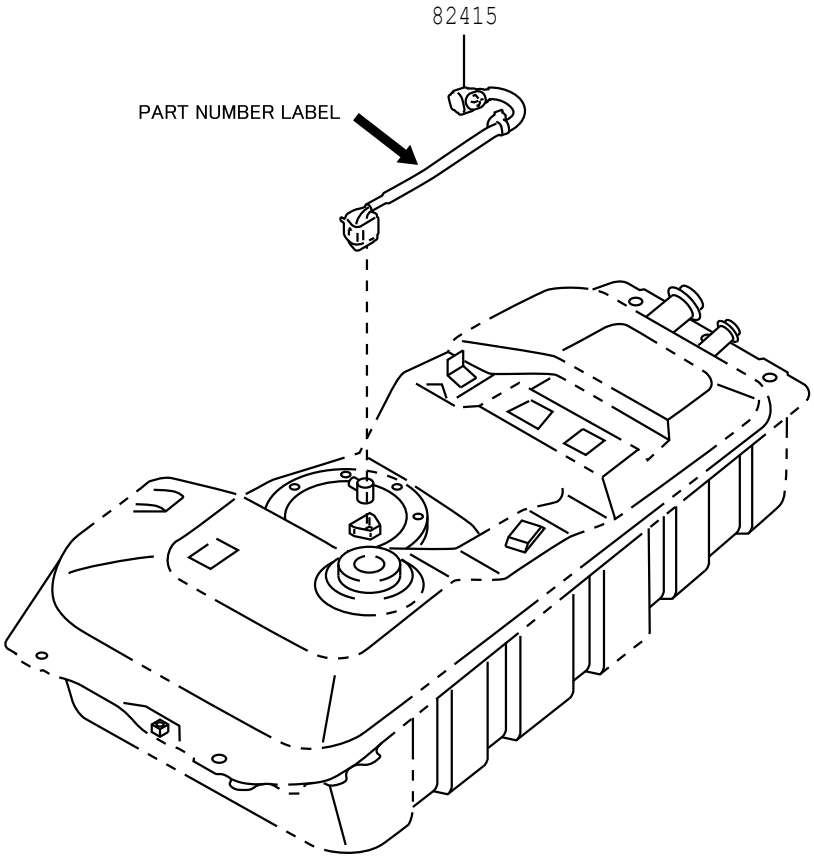

FIG.82-02 WIRING & CLAMP

(1111-1507)

CABLE BOND ILLUST NO. 7 OF 8

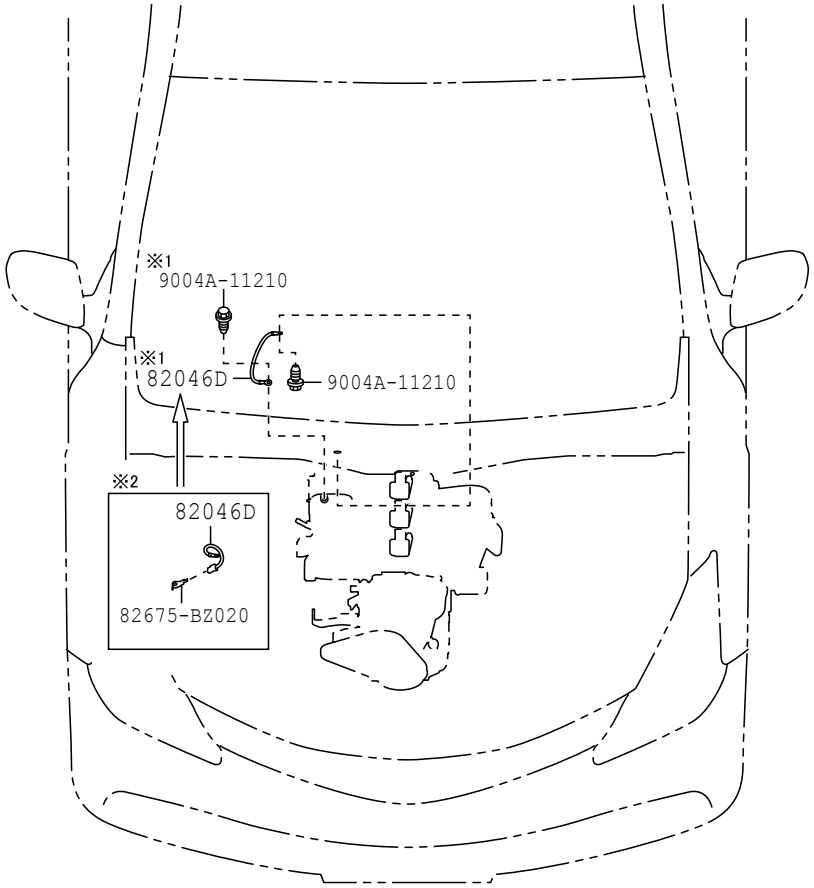

※1 EJVE
※2 K3VE

8202 827888

(1111-1507)

CLAMP & BRACKET ILLUST NO. 8 OF 8

(OTHERS)

EJVE 9004A-11211	EJVE Ⓑ— 9004A-11189	EJVE 9004A-11211	K3VE Ⓑ— 9004A-11189	K3VE Ⓑ— 9004A-11189	K3VE Ⓑ— 9004A-11189
82715-BZ040	82715-BZ700	82715-BZ020	82715-BZ050	82715-BZ070	82715-BZ080
K3VE 	K3VE Ⓑ— 9004A-11189	K3VE Ⓑ— 9004A-11189	K3VE Ⓑ— 9004A-11189	K3VE Ⓑ— 9004A-11189	K3VE Ⓑ— 91551-80820
82715-BZ090	82715-BZ100	82715-BZ110	82715-BZ160	82715-BZ170	82715-BZ730
K3VE Ⓑ— 91552-81012	 Ⓑ— 9004A-11189	 Ⓑ— 9004A-11189	K3VE 9004A-11188	F651..E4AT Ⓑ— 9004A-11189	(-1305)
82715-BZ760	82715-BZ130	82715-BZ140	82715-BZ670	82715-BZ180	82715-BZ750
MTM					
82715-BZ770					

(1607-)

CLAMP & BRACKET ILLUST NO. 8 OF 8

(OTHERS)

MTM 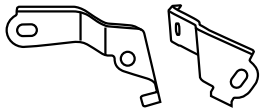	ATM Ⓑ— 9004A-11240 (M6, L=14)	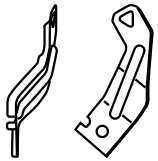 Ⓑ— 9004A-11240 (M6, L=14)	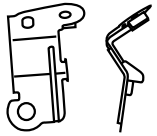 Ⓑ— ※1	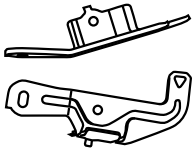 Ⓑ— 9004A-11189 (M6, L=12)	Ⓑ— 9004A-11240 (M6, L=14)
82715-BZA60	82715-BZA80	82715-BZA90	82715-BZB00	82715-BZB10	82715-BZB20
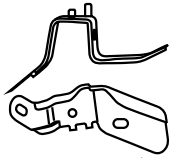 Ⓑ— 9004A-11240 (M6, L=14)	MTM	MTM 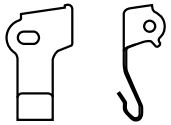 Ⓑ— 9004A-11273 (M6, L=20)			
82715-BZB30	82715-BZ770	31341-BZ210			

※1 91672-81020 (M10, L=20) (-1904)
9004A-11369 (M10, L=20) (1905-)

FIG. 82-02 WIRING & CLAMP

(1507-)F653, 654

ENGINE ILLUST NO. 1 OF 8

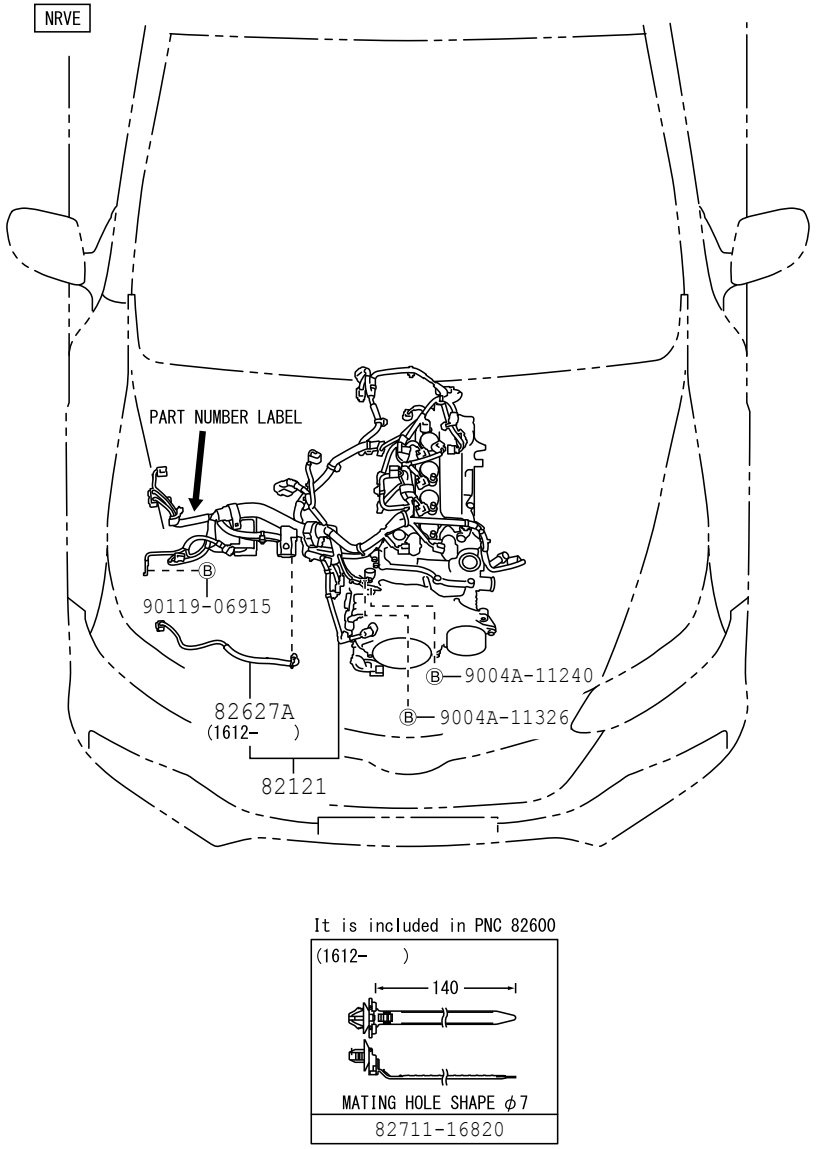

8202 82A213-F

FIG. 82-02 WIRING & CLAMP

(1507-1607)F650

ENGINE ILLUST NO. 1 OF 8

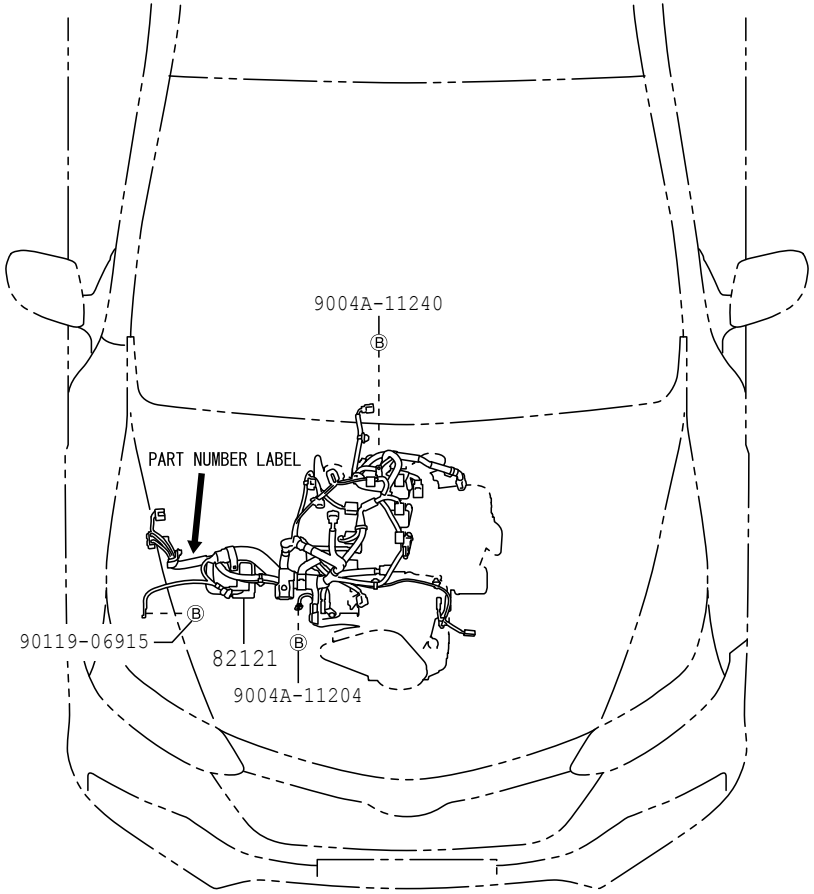

8202 82A214-C

FIG.82-02 WIRING & CLAMP

(1507-)

ENGINE ROOM ILLUST NO. 2 OF 8

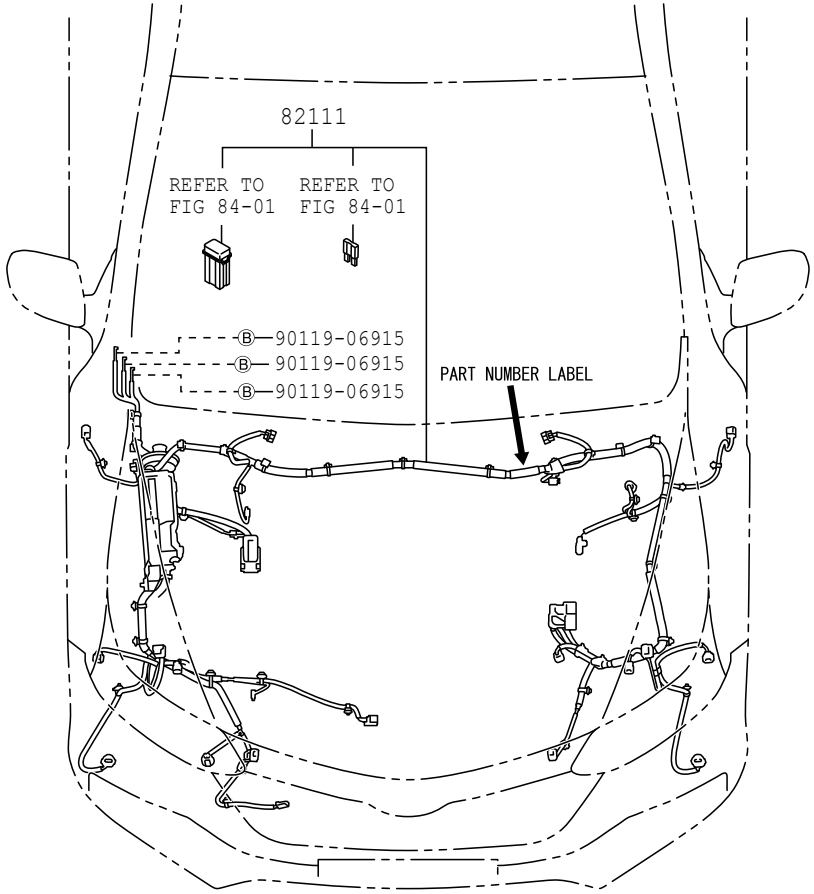

8202 82A215

(1507-)

INSTRUMENT PANEL ILLUST NO. 3 OF 8

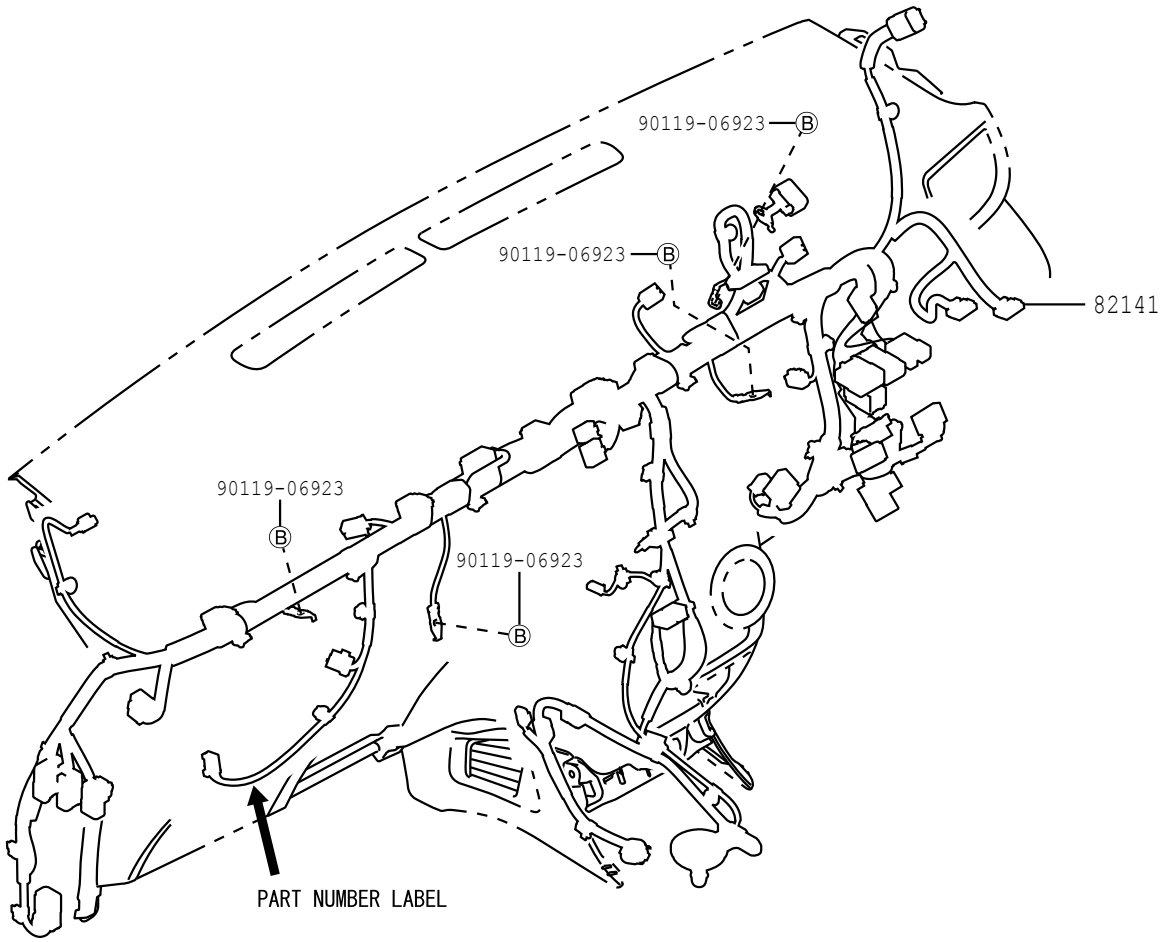

8202

82A216

FIG.82-02 WIRING & CLAMP

(1507-)

FLOOR ILLUST NO. 5 OF 8

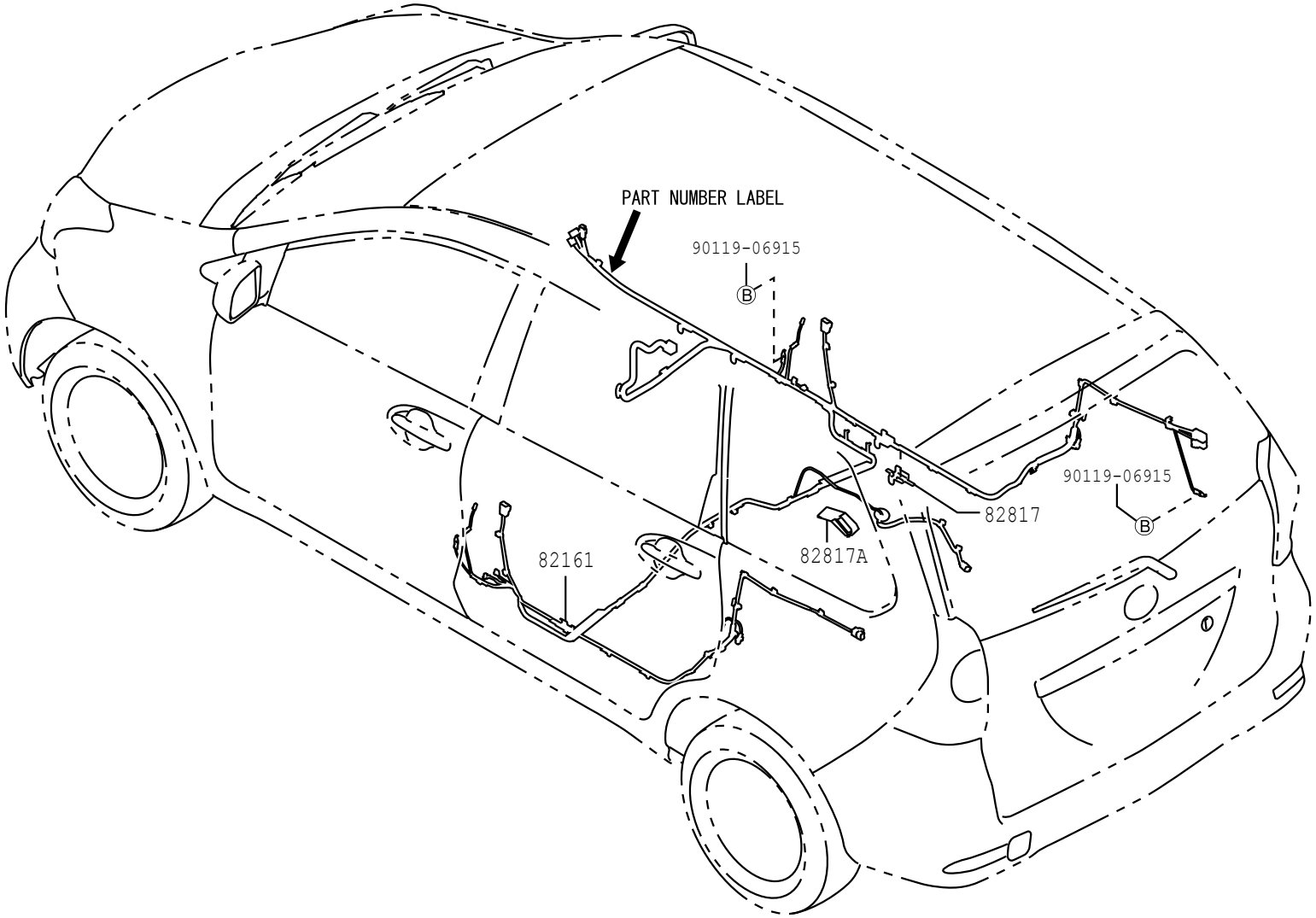

8202

82A217

FIG.82-02 WIRING & CLAMP

(1507-1901)

CABLE BOND ILLUST NO. 7 OF 8

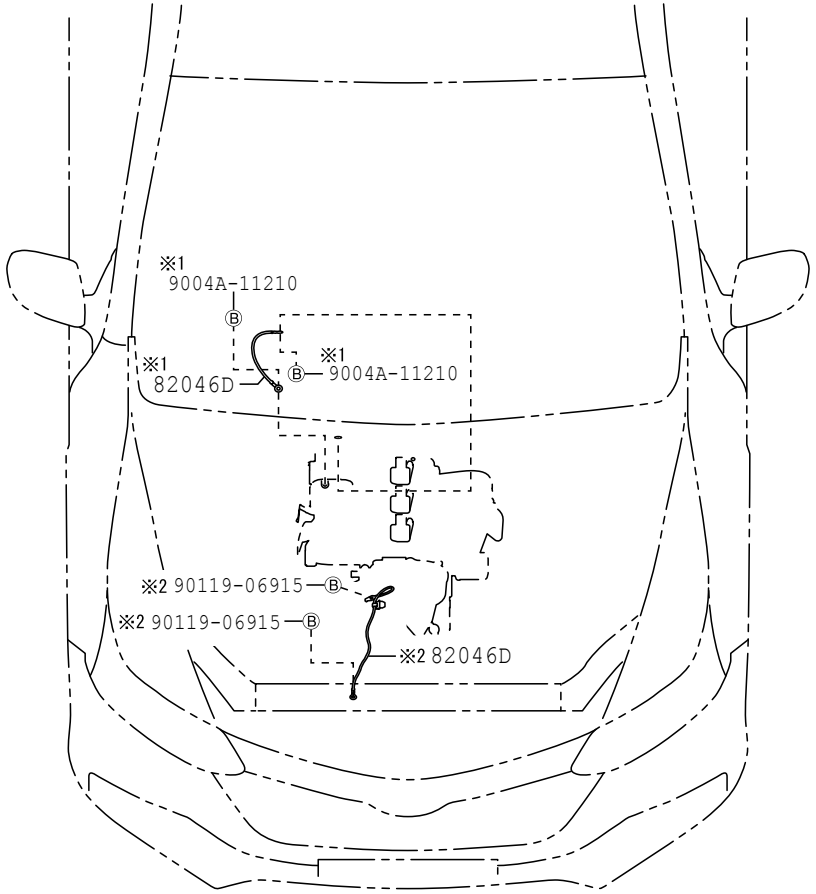

※1 EJVE
※2 NRVE

8202 82A218

(1507-1607)

CLAMP & BRACKET ILLUST NO. 8 OF 8

(OTHERS)

EJVE Ⓑ— 9004A-11211(M8, L=12)	MTM	EJVE Ⓑ— 9004A-11211(M8, L=12)	ATM Ⓑ— 9004A-11240(M6, L=14)	NRVE Ⓑ— 9004A-11240(M6, L=14)	NRVE Ⓑ—91672-81020(M10, L=20)
82715-BZ040	82715-BZA60	82715-BZ020	82715-BZA80	82715-BZA90	82715-BZB00
Ⓑ— 9004A-11189(M6, L=12)	NRVE Ⓑ— 9004A-11240(M6, L=14)	NRVE Ⓑ— 9004A-11240(M6, L=14)	MTM		
82715-BZB10	82715-BZB20	82715-BZB30	82715-BZ770		

PROD_DATE	MODELS	SPEC CODE	DESCRIPTION	R/P	PART NUMBER	QYT	REV_REF FR	REV_REF TO
	+----------+							
	| 82046D | WIRE, BODY GROUND							
	+----------+							
1111 - 1507	F651				82046-BZ090-	1		
1111 - 1507	F650				82046-BZ230-	1		
1507 - 1607	F650				82046-BZ300-	1		
1507 - 1901	F653				82046-BZ260-	1		
	+----------+							
	| 82111 | WIRE, ENGINE ROOM MAIN							
	+----------+							
1111 - 1305	F65#		W/PART NUMBER LABEL		82111-BZB80-	1		
1305 - 1507	F65#		W/PART NUMBER LABEL		82111-BZM30-	1		
1507 - 1607	F650				82111-BZQ70-	1		
1507 - 1610	F653..LO				82111-BZR20-	1		
1507 - 1610	F653..STD		W/PART NUMBER LABEL		82111-BZR40-	1		
1610 - 1901	F653..LO..5F	B2AE	INDONESIA TAXI		82111-BZR20-	1		
1610 - 1901	F653		W/PART NUMBER LABEL		82111-BZR41-	1		
1901 -	F654				82111-BY560-	1		
1901 -	F653..LO..5F	B2AE	INDONESIA TAXI		82111-BZZ40-	1		
1901 -	F653				82111-BZZ50-	1		
	+----------+							
	| 82112B | WIRE, ENGINE ROOM, NO.2							
	+----------+							
1111 - 1203	F650		W/PART NUMBER LABEL		82112-BZ110-	1		
1111 - 1203	F651..STD		W/PART NUMBER LABEL		82112-BZ110-	1		
1111 - 1203	F651..LO		W/PART NUMBER LABEL		82112-BZ120-	1		
1203 - 1305	F650		W/PART NUMBER LABEL		82112-BZ111-	1		
1203 - 1305	F651..STD		W/PART NUMBER LABEL		82112-BZ111-	1		
1203 - 1305	F651..LO		W/PART NUMBER LABEL		82112-BZ121-	1		
1305 - 1507	F650		W/PART NUMBER LABEL		82112-BZ450-	1		
1305 - 1507	F651..STD		W/PART NUMBER LABEL		82112-BZ450-	1		
1305 - 1507	F651..LO		W/PART NUMBER LABEL		82112-BZ460-	1		

FIG.82-02 WIRING & CLAMP

PROD_DATE	MODELS	SPEC CODE	DESCRIPTION	R/P	PART NUMBER	QYT	REV_REF FR	REV_REF TO
	+----------+							
	| 82121 | WIRE, ENGINE							
	+----------+							
1111 - 1507	F650				82121-BZ670-	1		
1111 - 1507	F651				82121-BZ700-	1		
1507 - 1606	F653..E4AT		W/PART NUMBER LABEL		82121-BZB50-	1		
1507 - 1606	F653..5F		W/PART NUMBER LABEL		82121-BZB90-	1		
1507 - 1607	F650		W/PART NUMBER LABEL		82121-BZB40-	1		
1607 - 1810	F653..E4AT		W/PART NUMBER LABEL		82121-BZB51-	1		
1607 - 1810	F653..5F		W/PART NUMBER LABEL		82121-BZB91-	1		
1810 - 1901	F653..E4AT		W/PART NUMBER LABEL		82121-BZB61-	1		
1810 - 1901	F653..5F		W/PART NUMBER LABEL		82121-BZE20-	1		
1901 -	F653..5F		W/PART NUMBER LABEL		82121-BZE21-	1		
1901 -	F654..5F		W/PART NUMBER LABEL		82121-BZK20-	1		
1901 -	F65#..E4AT		W/PART NUMBER LABEL		82121-BZK30-	1		
	+----------+							
	| 82122 | WIRE, ENGINE, NO.2							
	+----------+							
1111 - 1507	F650				82122-BZ250-	1		
1111 - 1507	F651				82122-BZ260-	1		
	+----------+							
	| 82141 | WIRE, INSTRUMENT PANEL							
	+----------+							
1111 - 1207	F651..E4AT		W/PART NUMBER LABEL		82141-BZV40-	1		
1111 - 1207	F65#..STD		W/PART NUMBER LABEL		82141-BZV70-	1		
1111 - 1207	F65#..LO..5F		W/PART NUMBER LABEL		82141-BZV80-	1		
1207 - 1305	F651..E4AT		W/PART NUMBER LABEL		82141-BZV41-	1		
1207 - 1305	F650..STD		W/PART NUMBER LABEL		82141-BZV71-	1		
1207 - 1305	F650..LO		W/PART NUMBER LABEL		82141-BZV81-	1		
1207 - 1305	F651..5F		W/PART NUMBER LABEL		82141-BZV81-	1		
1305 - 1410	F651..E4AT		W/PART NUMBER LABEL		82141-BZS10-	1		
1305 - 1410	F650..LO		W/PART NUMBER LABEL		82141-BZS20-	1		

PROD_DATE	MODELS	SPEC CODE	DESCRIPTION	R/P	PART NUMBER	QYT	REV_REF FR	REV_REF TO
	+----------+							
	| 82141 | WIRE, INSTRUMENT PANEL							
	CONTINUED--+							
1305 - 1410	F651..5F		W/PART NUMBER LABEL		82141-BZS20-	1		
1305 - 1507	F650..STD		W/PART NUMBER LABEL		82141-BZS30-	1		
1410 - 1507	F651..E4AT		W/PART NUMBER LABEL		82141-BZS11-	1		
1410 - 1507	F650..LO		W/PART NUMBER LABEL		82141-BZS21-	1		
1410 - 1507	F651..5F		W/PART NUMBER LABEL		82141-BZS21-	1		
1507 - 1607	F650				82141-BYJ30-	1		
1507 - 1901	F653..LO..5F				82141-BYJ40-	1		
1507 - 1901	F653..STD..5F				82141-BYK00-	1		
1507 - 1901	F653..LO..E4AT				82141-BYK40-	1		
1507 - 1901	F653..STD..E4AT				82141-BYK70-	1		
1901 -	F653..LO..5F				82141-BXB70-	1		
1901 -	F65#..STD..5F				82141-BXC00-	1		
1901 -	F653..LO..E4AT				82141-BXC20-	1		
1901 -	F65#..STD..E4AT				82141-BXC30-	1		
	+----------+							
	| 82151 | WIRE, FRONT DOOR, RH							
	+----------+							
1111 - 1207	F651..STD				82151-BZ560-	1		
1111 - 1507	F65#..LO				82151-BZ530-	1		
1111 - 1507	F650..STD				82151-BZ560-	1		
1207 - 1507	F651..STD				82151-BZ530-	1		
1507 - 1607	F650..STD				82151-BZB00-	1		
1507 - 1607	F650..LO				82151-BZB20-	1		
1507 - 1901	F653				82151-BZB20-	1		
1901 -	F65#		W/PART NUMBER LABEL		82151-BZ760-	1		
1901 -	F653..LO..5F	B2AE	INDONESIA TAXI,W/PAR T NUMBER LABEL		82151-BZF30-	1		

FIG.82-02 WIRING & CLAMP

PROD_DATE	MODELS	SPEC CODE	DESCRIPTION	R/P	PART NUMBER	QYT	REV_REF FR	REV_REF TO
	+----------+							
	| 82152 | WIRE, FRONT DOOR, LH							
	+----------+							
1111 - 1207	F651..STD				82152-BZ560-	1		
1111 - 1507	F65#..LO				82152-BZ540-	1		
1111 - 1507	F650..STD				82152-BZ560-	1		
1207 - 1507	F651..STD				82152-BZ540-	1		
1507 - 1607	F650..STD				82152-BZA90-	1		
1507 - 1607	F650..LO				82152-BZC70-	1		
1507 - 1901	F653				82152-BZC70-	1		
1901 -	F65#		W/PART NUMBER LABEL		82152-BZ760-	1		
1901 -	F653..LO..5F	B2AE	INDONESIA TAXI,W/PAR T NUMBER LABEL		82152-BZE40-	1		
	+----------+							
	| 82153 | WIRE, REAR DOOR, NO.1							
	+----------+							
1111 - 1207	F651..STD		W/PART NUMBER LABEL		82153-BZ230-	2		
1111 - 1507	F650..STD		W/PART NUMBER LABEL		82153-BZ230-	2		
1111 - 1507	F65#..LO		W/PART NUMBER LABEL		82153-BZ250-	2		
1207 - 1507	F651..STD		W/PART NUMBER LABEL		82153-BZ250-	2		
1507 - 1607	F650..STD				82153-BZ230-	2		
1507 - 1607	F650..LO				82153-BZ250-	2		
1507 - 1901	F653				82153-BZ250-	2		
1901 -	F65#				82153-BZ250-	2		
	+----------+							
	| 82161 | WIRE, FLOOR							
	+----------+							
1111 - 1207	F65#..STD		W/PART NUMBER LABEL		82161-BZF30-	1		
1111 - 1207	F65#..LO		W/PART NUMBER LABEL		82161-BZF70-	1		
1207 - 1305	F650..STD		W/PART NUMBER LABEL		82161-BZF31-	1		
1207 - 1305	F651		W/PART NUMBER LABEL		82161-BZF71-	1		
1207 - 1305	F650..LO		W/PART NUMBER LABEL		82161-BZF71-	1		

PROD_DATE	MODELS	SPEC CODE	DESCRIPTION	R/P	PART NUMBER	QYT	REV_REF FR	REV_REF TO
	+----------+							
	| 82161 | WIRE, FLOOR							
	CONTINUED--+							
1305 - 1507	F65#		W/PART NUMBER LABEL		82161-BZQ20-	1		
1507 - 1607	F650		W/PART NUMBER LABEL		82161-BZT90-	1		
1507 - 1712	F653		W/PART NUMBER LABEL		82161-BZT90-	1		
1712 - 1901	F653		W/PART NUMBER LABEL		82161-BZT91-	1		
1901 -	F654		W/PART NUMBER LABEL		82161-BY250-	1		
1901 -	F653		W/PART NUMBER LABEL		82161-BY300-	1		
	+----------+							
	| 82171 | WIRE, ROOF, NO.1							
	+----------+							
1111 - 1507	F65#				82171-BZ390-	1		
1507 - 1607	F650				82171-BZ390-	1		
1507 - 1901	F653				82171-BZ390-	1		
1901 -	F65#				82171-BZ390-	1		
	+----------+							
	| 82184 | WIRE, BACK DOOR, NO.1							
	+----------+							
1111 - 1305	F65#..STD		W/PART NUMBER LABEL		82184-BZ370-	1		
1111 - 1507	F65#..LO		W/PART NUMBER LABEL		82184-BZ390-	1		
1305 - 1507	F65#..STD		W/PART NUMBER LABEL		82184-BZ390-	1		
1507 - 1607	F650..STD				82184-BZ370-	1		
1507 - 1607	F650..LO				82184-BZ390-	1		
1507 - 1901	F653				82184-BZ390-	1		
1901 -	F65#				82184-BZC10-	1		
	+----------+							
	| 82185 | WIRE, BACK DOOR, NO.2							
	+----------+							
1111 - 1507	F65#		W/PART NUMBER LABEL		82185-BZ230-	1		
1507 - 1607	F650				82185-BZ230-	1		
1507 - 1901	F653				82185-BZ230-	1		
1901 -	F65#				82185-BZ420-	1		

FIG.82-02 WIRING & CLAMP

PROD_DATE	MODELS	SPEC CODE	DESCRIPTION	R/P	PART NUMBER	QYT	REV_REF FR	REV_REF TO
	+----------+							
	| 82415 | WIRE, FUEL PUMP							
	+----------+							
1111 - 1310	F65#		W/PART NUMBER LABEL		82415-BZ140-	1		
				#	(82415-BZ160-)	1		
1310 - 1507	F65#		W/PART NUMBER LABEL		82415-BZ160-	1		
1507 - 1607	F650				82415-BZ160-	1		
1507 - 1901	F653				82415-BZ160-	1		
1901 -	F65#				82415-BZ160-	1		
	+----------+							
	| 82627A | WIRE, FUSIBLE LINK							
	+----------+							
1612 - 1901	F653				82627-BZ090-	1		
1901 -	F65#				82627-BZ090-	1		
	+----------+							
	| 82817 | PROTECTOR, WIRING HARNESS, NO.1							
	+----------+							
1111 - 1507	F65#				82817-BZ050-	2		
1507 - 1901	F65#				82817-BZ050-	1		
1901 -	F65#				82817-BZ050-	1		
	+----------+							
	| 82817A | PROTECTOR, WIRING HARNESS, NO.2							
	+----------+							
1111 - 1507	F65#				82817-BZ020-	1		
				#	(82817-BZ180-)	1		
1507 - 1607	F650				82817-BZ020-	1		
				#	(82817-BZ180-)	1		
1507 - 1901	F653				82817-BZ020-	1		
				#	(82817-BZ180-)	1		
1901 -	F65#				82817-BZ180-	1		

(1111-)

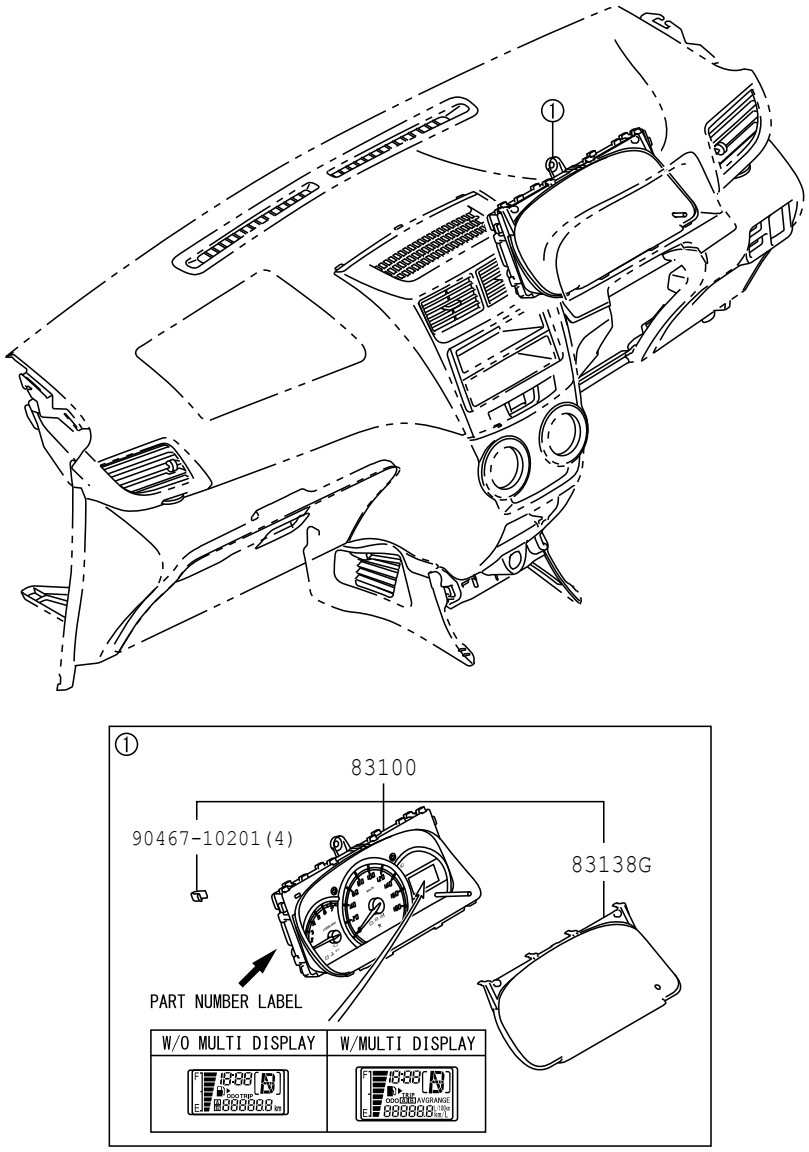

8301 831617-B

FIG.83-01 METER

PROD_DATE	MODELS	SPEC CODE	DESCRIPTION	R/P	PART NUMBER	QYT	REV_REF FR	REV_REF TO
	+----------+							
	| 83100 | METER ASSY, COMBINATION							
	+----------+							
1111 - 1305	F651..5F		W/PART NUMBER LABEL		83800-BZL90-	1		
1111 - 1305	F651..E4AT		W/PART NUMBER LABEL		83800-BZM00-	1		
1111 - 1305	F650		W/PART NUMBER LABEL		83800-BZT60-	1		
1305 - 1507	F651..5F		W/PART NUMBER LABEL		83800-BZL92-	1		
1305 - 1507	F651..E4AT		W/PART NUMBER LABEL		83800-BZM02-	1		
1305 - 1507	F650		W/PART NUMBER LABEL		83800-BZT62-	1		
1507 - 1607	F650		W/PART NUMBER LABEL		83800-BZT80-	1		
1507 - 1901	F653..STD..E4AT		W/PART NUMBER LABEL		83800-BY020-	1		
1507 - 1901	F653..LO..E4AT		W/PART NUMBER LABEL		83800-BY030-	1		
1507 - 1901	F653..STD..5F		W/PART NUMBER LABEL		83800-BZZ40-	1		
1507 - 1901	F653..LO..5F		W/PART NUMBER LABEL		83800-BZZ50-	1		
1901 -	F653..LO..5F		DENSO,W/PART NUMBER LABEL		83800-BY650-	1		
1901 -	F653..STD..5F		DENSO,W/PART NUMBER LABEL		83800-BY660-	1		
1901 -	F653..LO..E4AT		DENSO,W/PART NUMBER LABEL		83800-BYD20-	1		
1901 -	F653..STD..E4AT		DENSO,W/PART NUMBER LABEL		83800-BYD30-	1		
1901 -	F654..5F		DENSO,W/PART NUMBER LABEL		83800-BYD70-	1		
1901 -	F654..E4AT		DENSO,W/PART NUMBER LABEL		83800-BYD80-	1		
	+----------+							
	| 83138G | GLASS, COMBINATION METER							
	+----------+							
1111 - 1507	F65#				83852-BZ140-	1		
1507 - 1607	F650				83852-BZ170-	1		
1507 - 1901	F653				83852-BZ170-	1		
1901 -	F65#				83852-BZ170-	1		

(1111-1507)F651

ENGINE & TRANSMISSION ILLUST NO. 1 OF 6

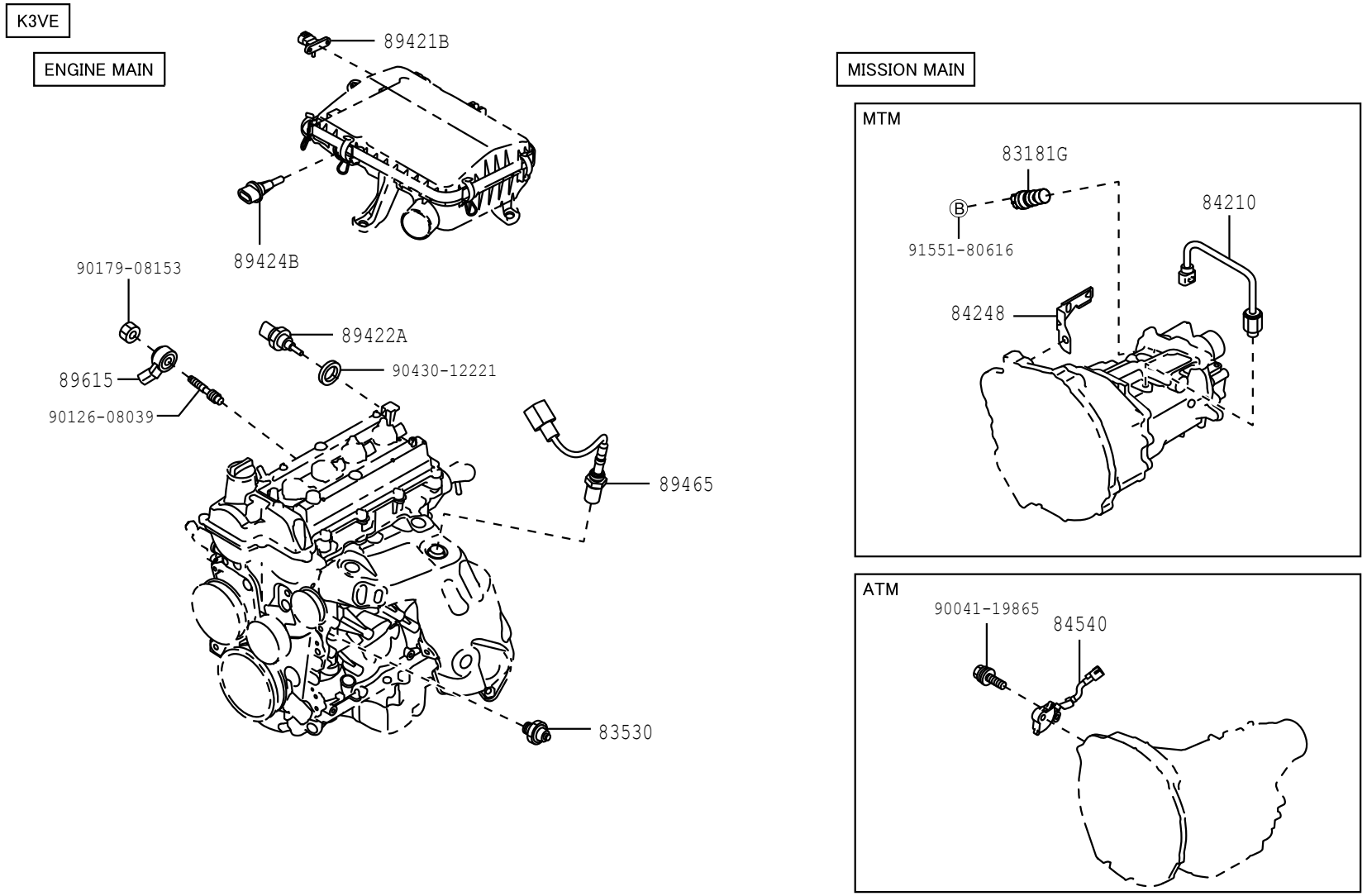

8401

84C615

(1111-1607)F650

ENGINE & TRANSMISSION ILLUST NO. 1 OF 6

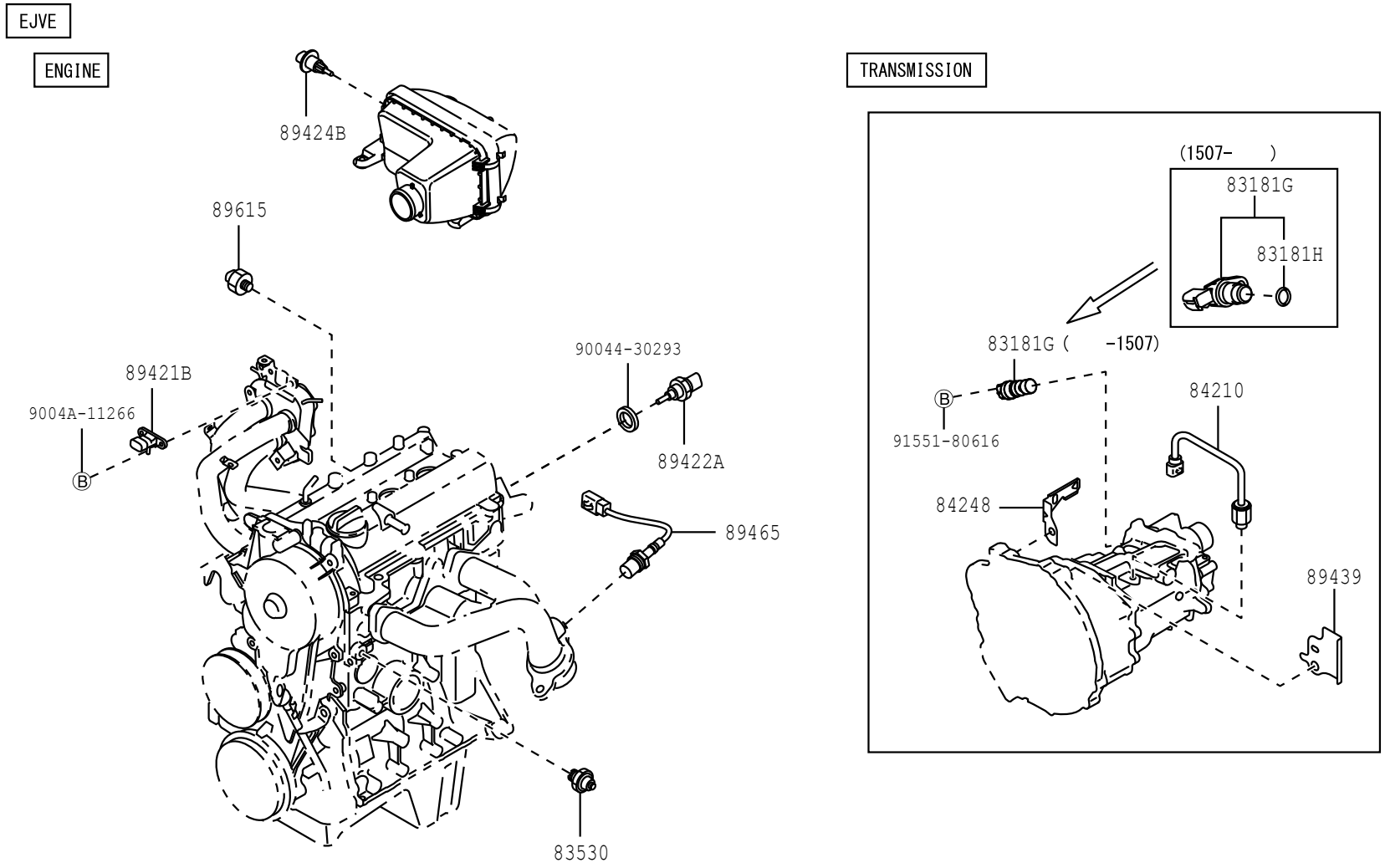

(1111-1507)

ENGINE ROOM ILLUST NO. 2 OF 6

※1 ENGINE RELAY BLOCK

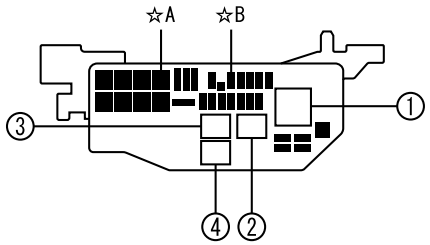

No.	PNC
①	85916P
②	86530
③	85934
④	85925

☆A		☆B	
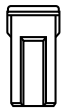		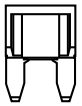	
PART No.		PART No.	
90049-40048	40A	90049-40055	7.5A
90049-40049	30A	90049-40056	10A
90049-40047	50A	90049-40057	15A

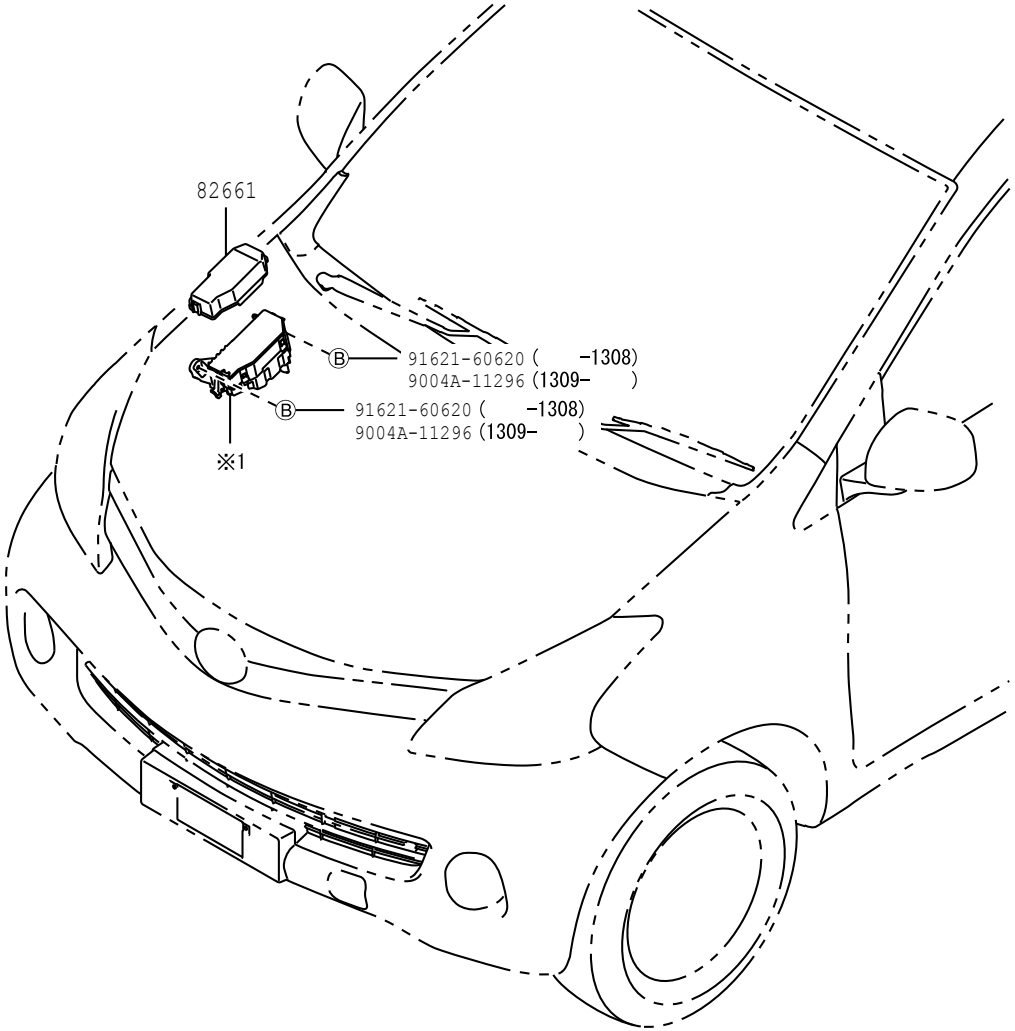

8401

84C623-B

(1111-1507)

INSTRUMENT PANEL ILLUST NO. 3 OF 6

※1 INSTRUMENT PANEL JUNCTION BLOCK

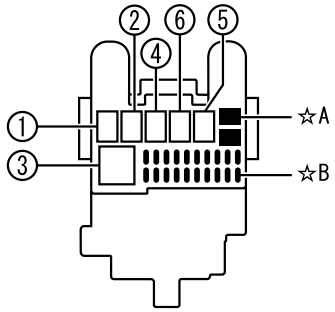

No.	PNC
①	85912E
②	28300
③	28371
④	85935
⑤	85913C

☆A		☆B	
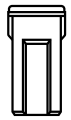		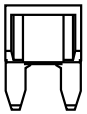	
PART No.		PART No.	
90049-40049	30A	90049-40055	7.5A
		90049-40056	10A
		90049-40057	15A
		90049-40058	20A

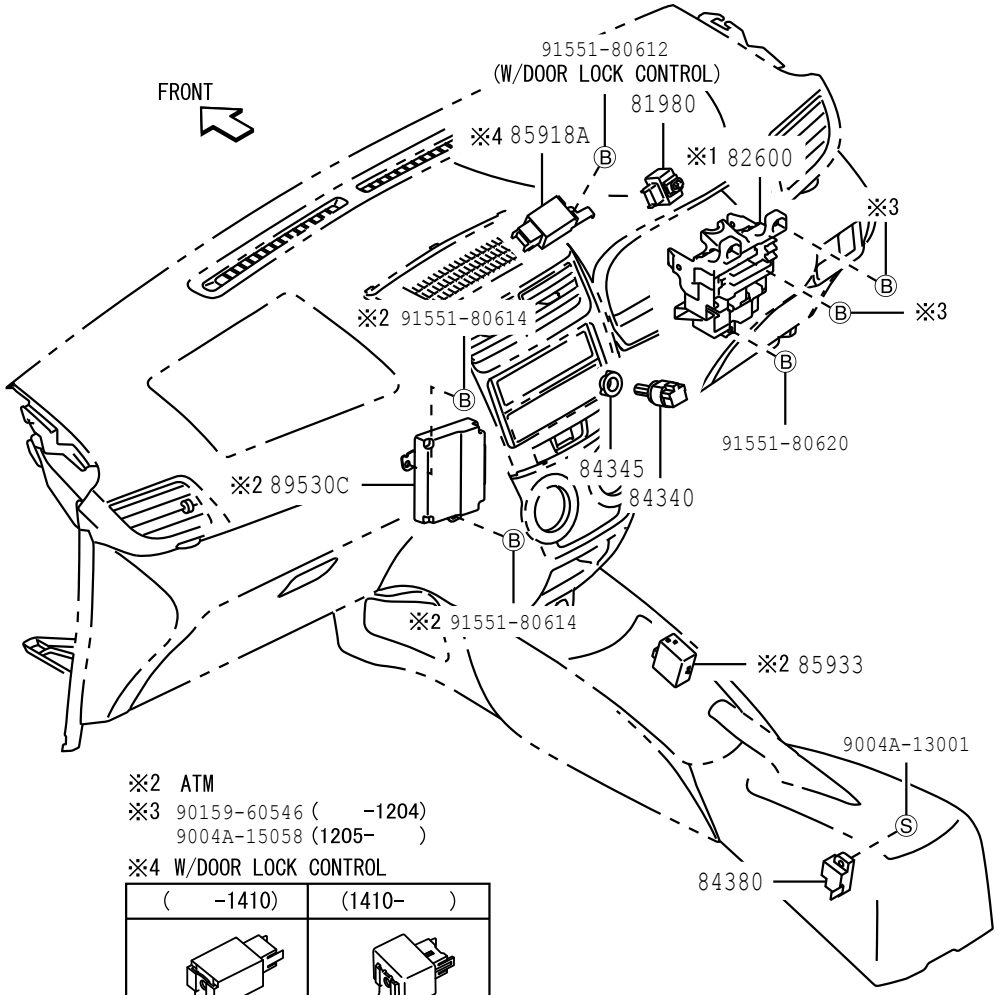

※2 ATM

※3 90159-60546 (-1204)
9004A-15058 (1205-)

※4 W/DOOR LOCK CONTROL

(-1410)	(1410-)
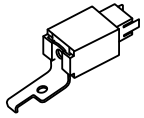	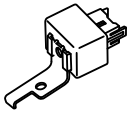

8401

84C624-C

(1111-1901)

SWITCH ILLUST NO. 5 OF 6

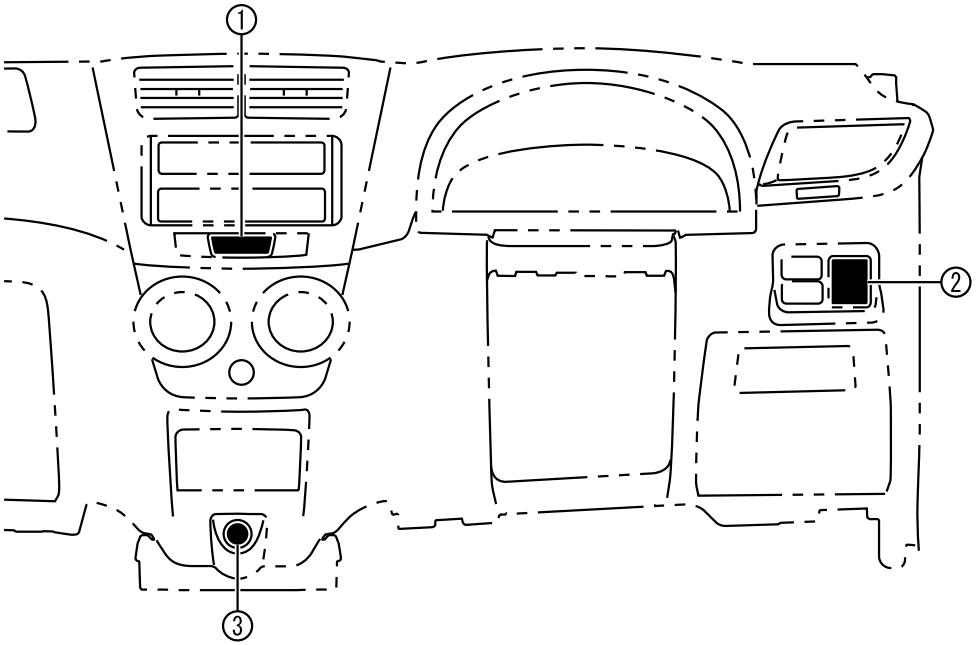

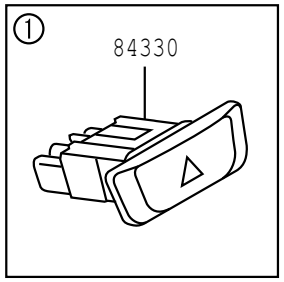

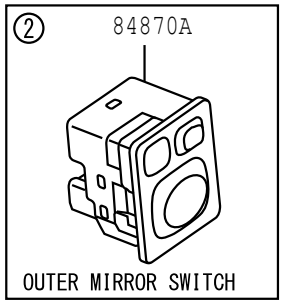

※1

TYPE A	TYPE B
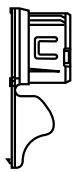	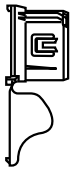

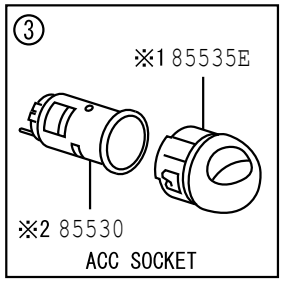

※2 Choose a type same as a COVER

8401

84C625-A

(1111-1507)

STEERING ILLUST NO. 6 OF 6

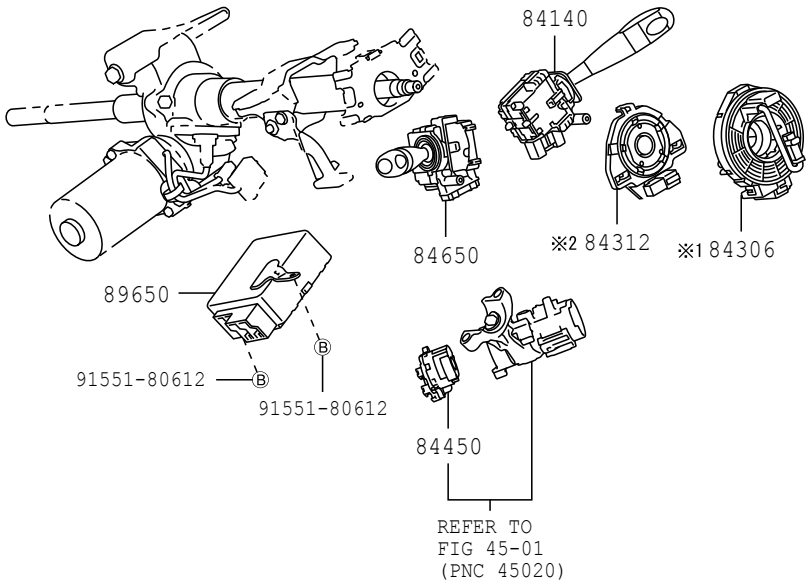

※1 W/ AIR BAG
※2 W/O AIR BAG

(1111-)

BODY ILLUST NO. 4 OF 6

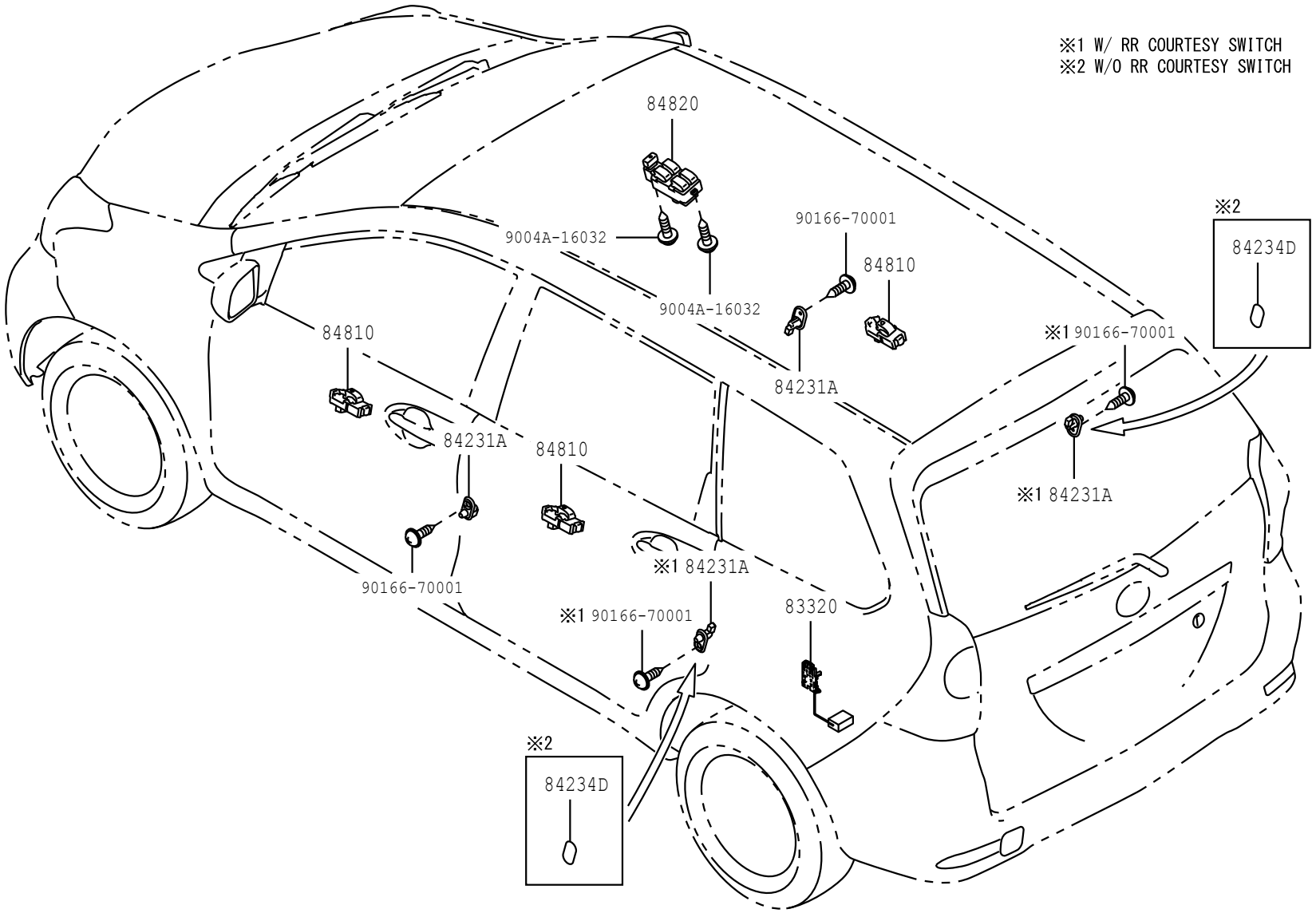

8401

84C786-A

(1507-1810)F653

ENGINE & TRANSMISSION ILLUST NO. 1 OF 6

NRVE

ENGINE

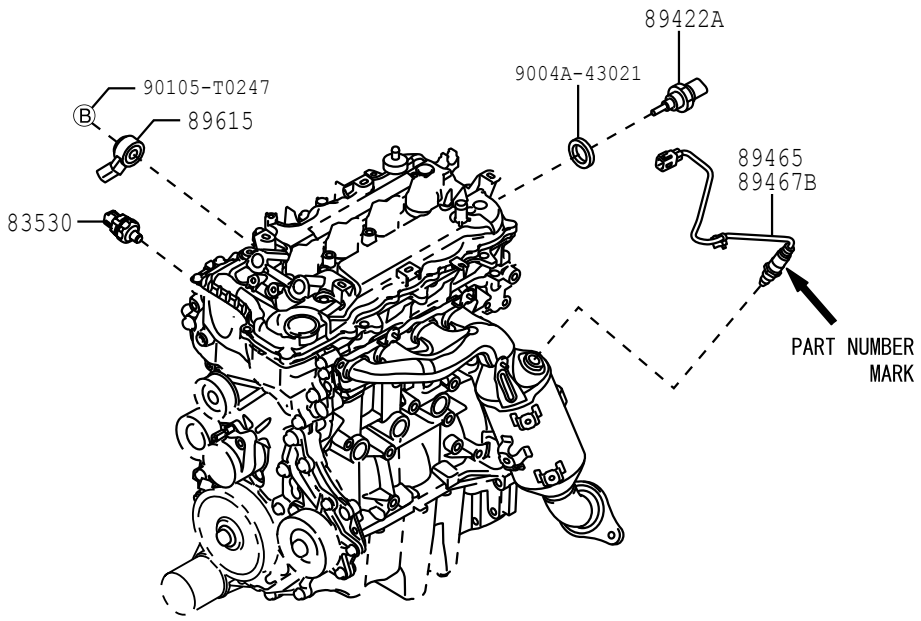

TRANSMISSION

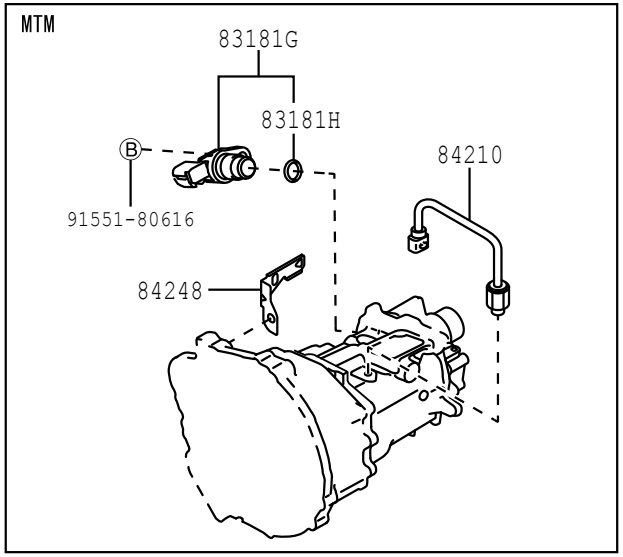

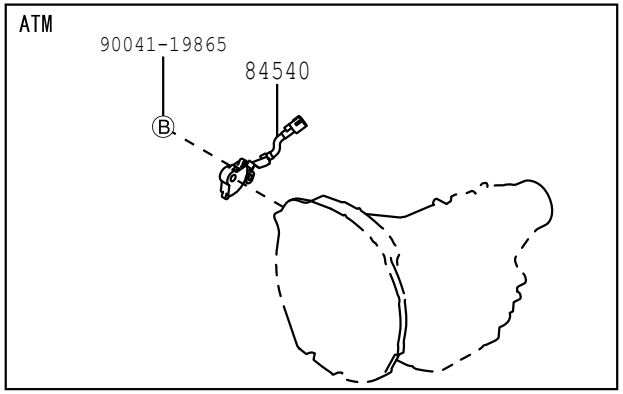

8401

84G334-B

※1 INSTRUMENT PANEL JUNCTION BLOCK

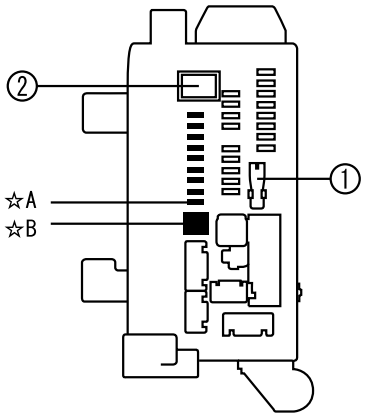

No.	PNC
①	82616
②	85916D

☆A		☆B	
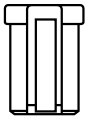			
PART No.		PART No.	
90982-08298	30A	90982-09019	5A
		90982-09020	7.5A
		90982-09021	10A
		90982-09022	15A
		90982-09023	20A
		90982-09024	25A

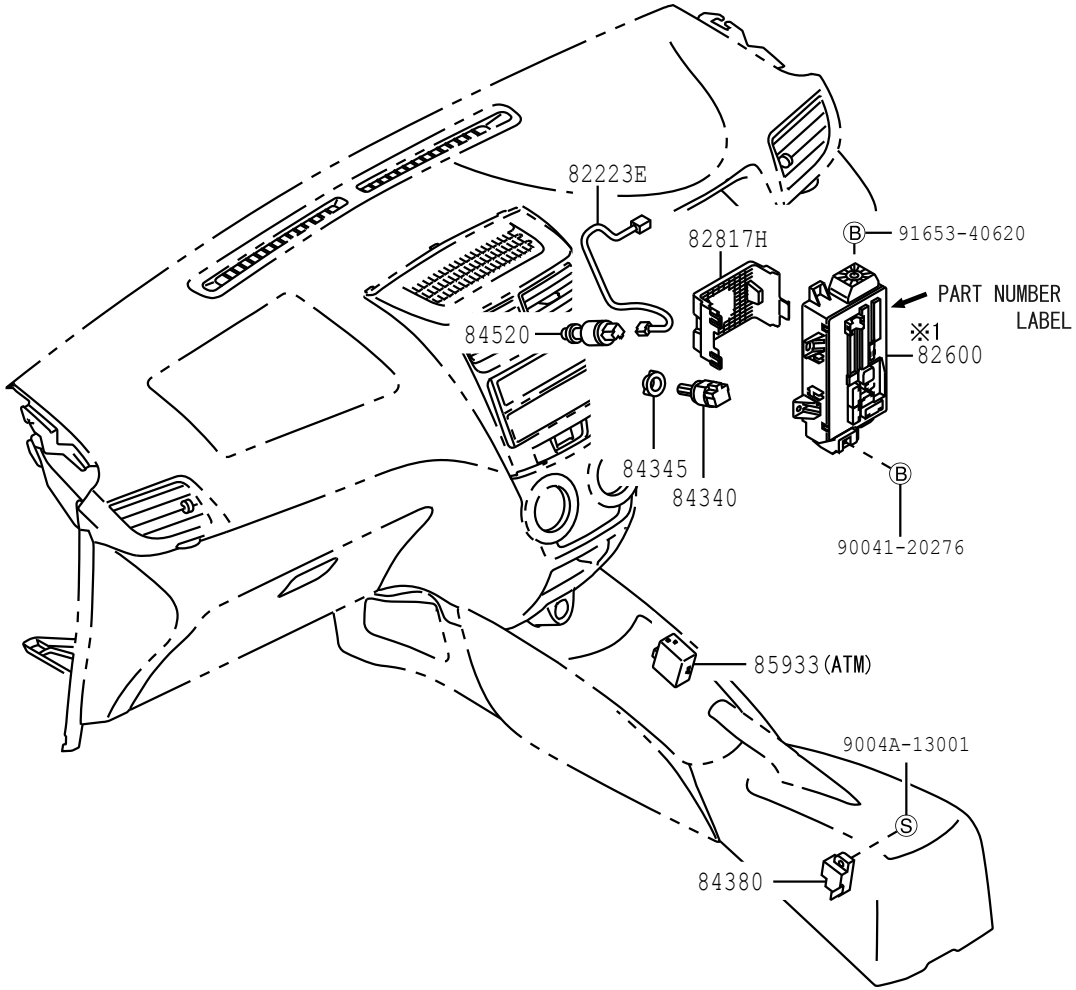

(1507-1901)

STEERING ILLUST NO. 6 OF 6

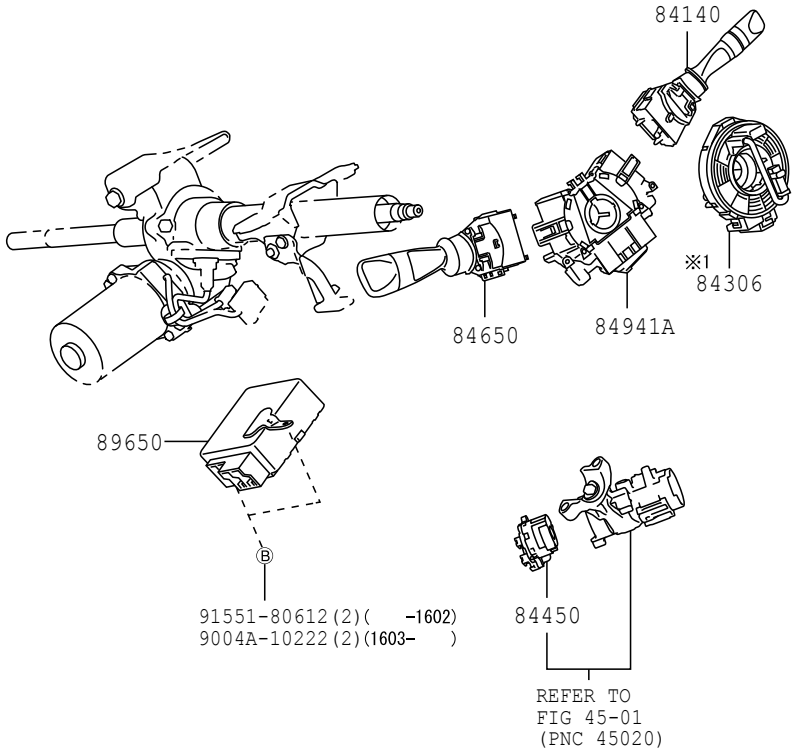

※1

TYPE A	TYPE B
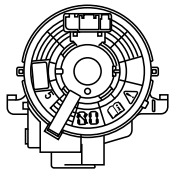	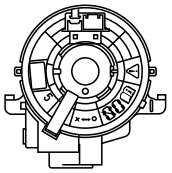

8401 84G337-F

FIG.84-01 SWITCH & RELAY & COMPUTER

(1810-)

ENGINE & TRANSMISSION ILLUST NO. 1 OF 6

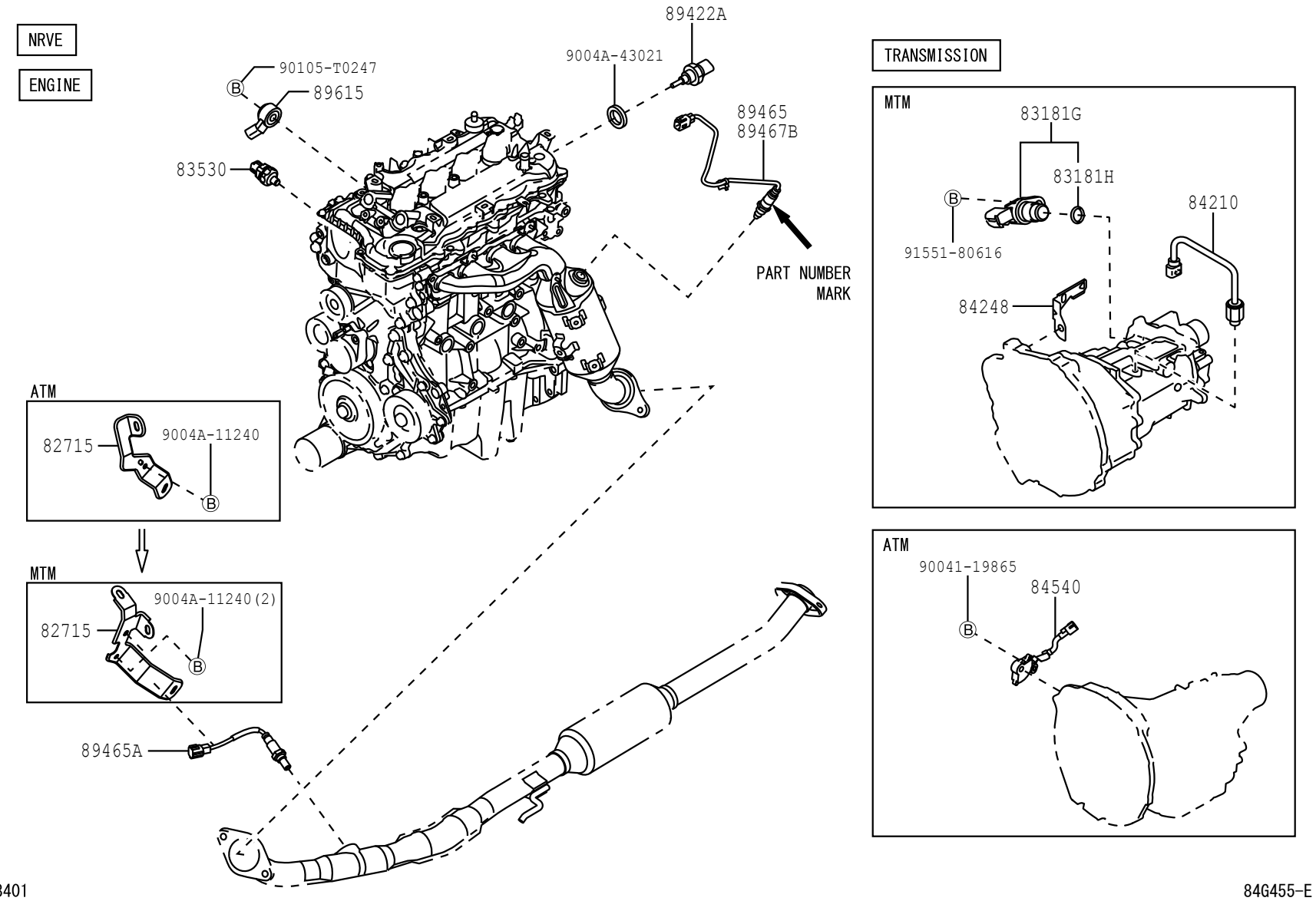

8401

84G455-E

(1507-1901)

ENGINE ROOM ILLUST NO. 2 OF 6

※1 ENGINE RELAY BLOCK

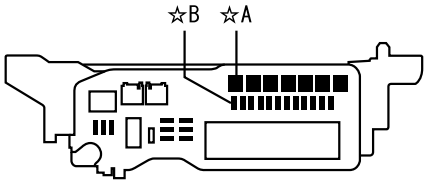

☆A		☆B	
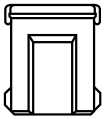			
PART No.		PART No.	
90982-08295 (-1608)	30A	90982-09019	5A
90982-08298 (1609-)	30A	90982-09021	10A
90982-08294 (-1608)	40A	90982-09022	15A
90049-40063 (1609-)	40A	90982-09023	20A
90049-40062	50A	90982-09025	30A

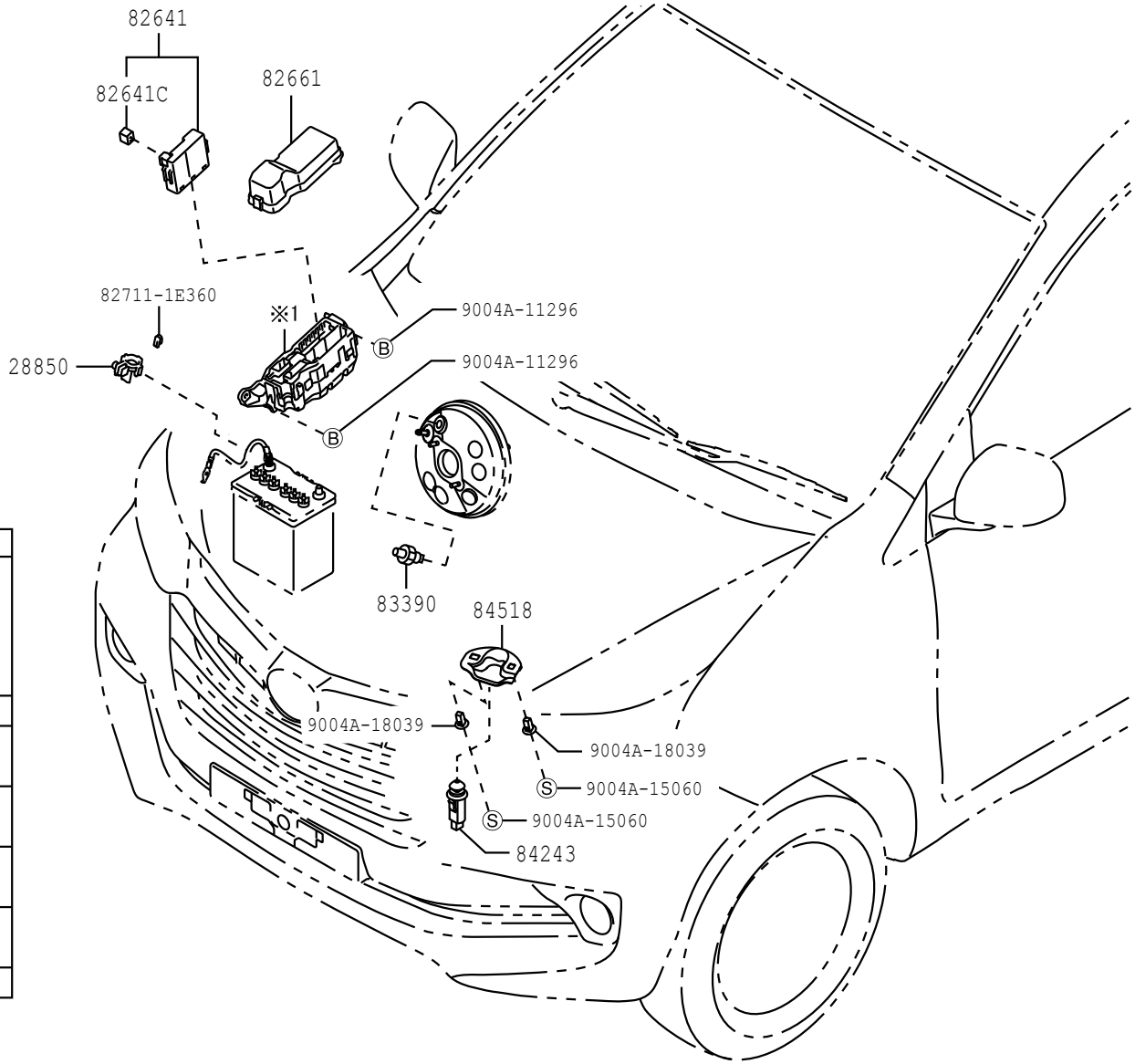

8401

84H024-F

(1901-)

ENGINE ROOM ILLUST NO. 2 OF 6

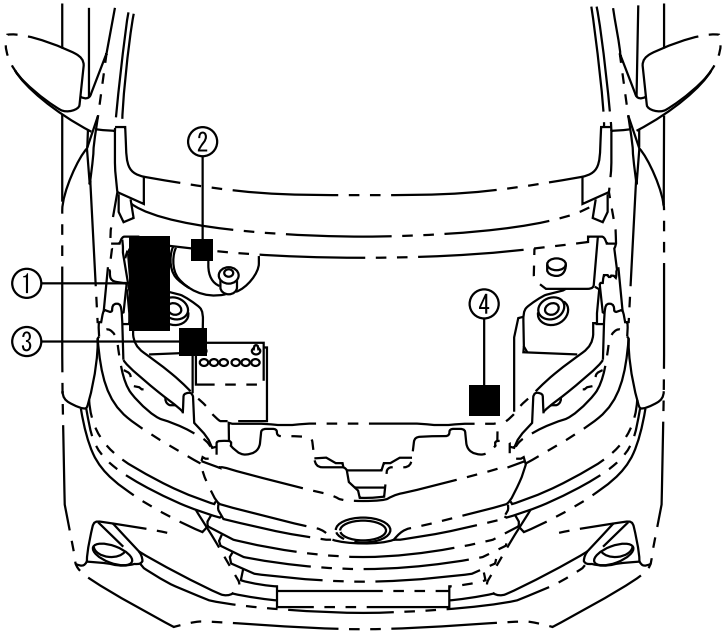

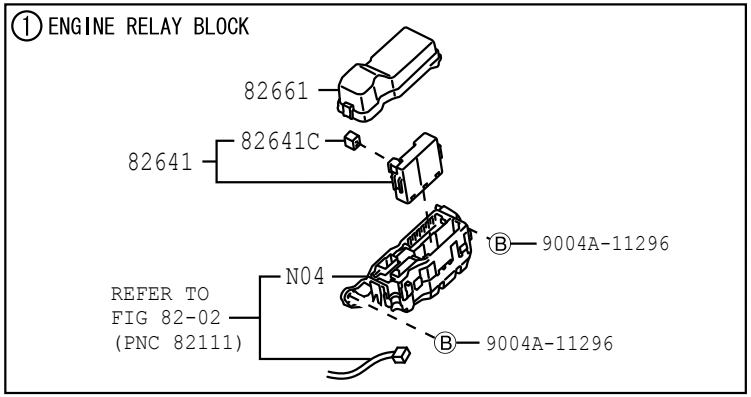

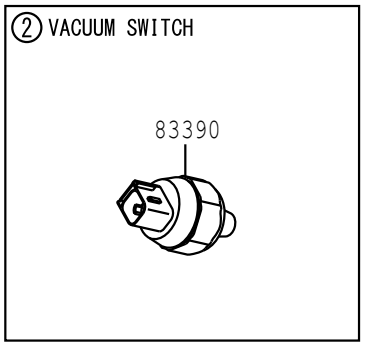

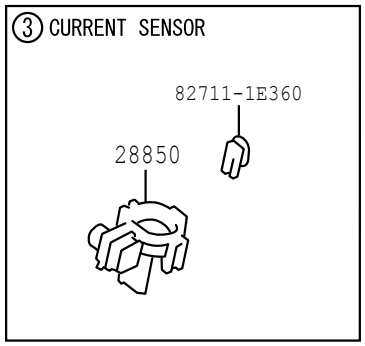

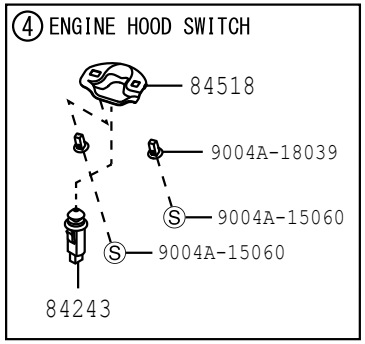

ENGINE RELAY BLOCK

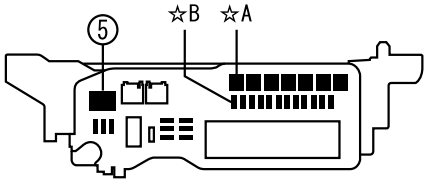

No.	PNC
⑤	85930G

☆A		☆B	
PART No.		PART No.	
90982-08298	30A	90982-09019	5A
90049-40063	40A	90982-09021	10A
90049-40062	50A	90982-09022	15A
		90982-09023	20A
		90982-09025	30A

Refer to FIG 82-02 of PNC 82111 for harnesses to connected to ②,④.

8401 Refer to FIG 82-02 of PNC 82121 for harnesses to connected to ③.

N04 This part is not available for service

84J687-A

(1901-)

INSTRUMENT PANEL ILLUST NO. 3 OF 6

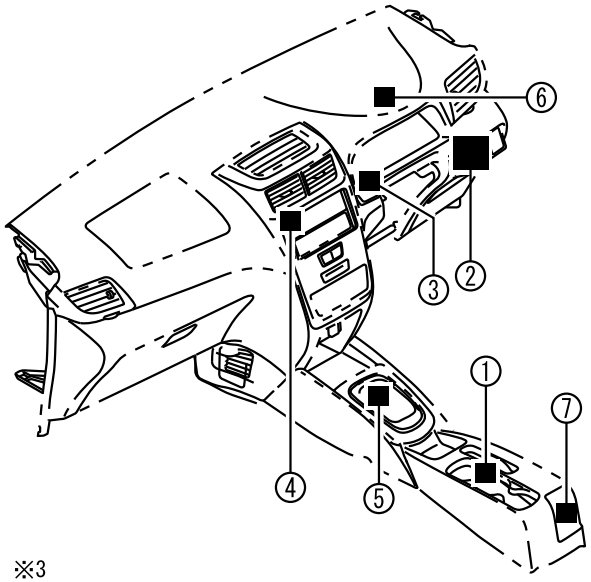

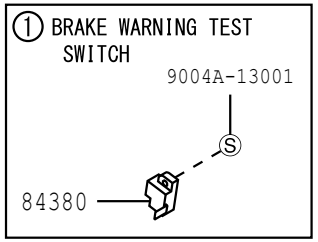

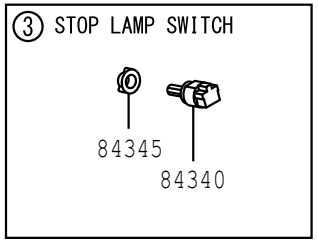

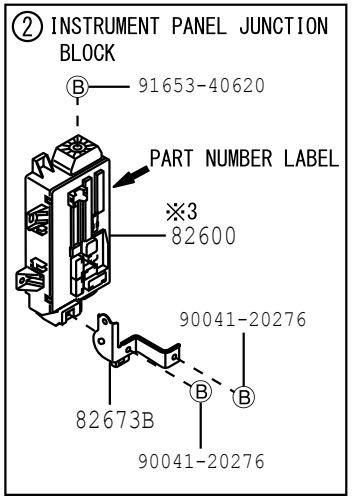

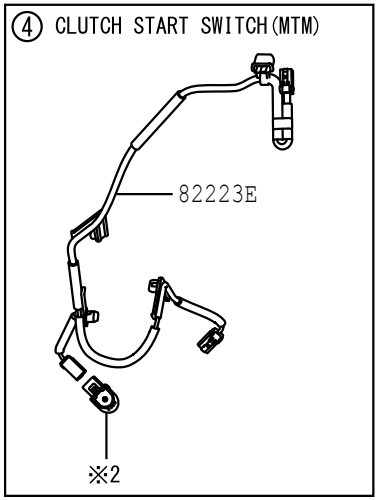

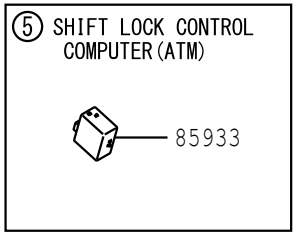

※2

CABLE CLUTCH	HYDRAULIC CLUTCH
84520	84520E Ⓝ 90041-70330

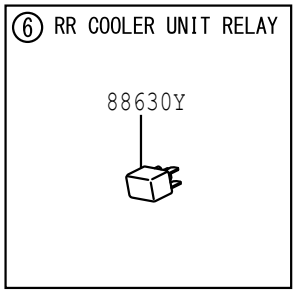

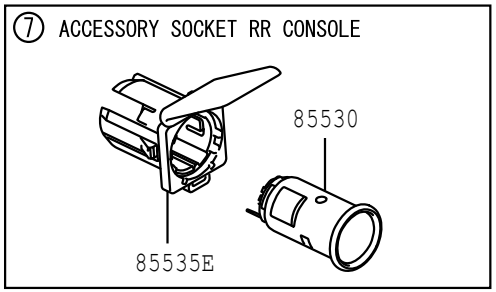

※3

INSTRUMENT PANEL JUNCTION BLOCK

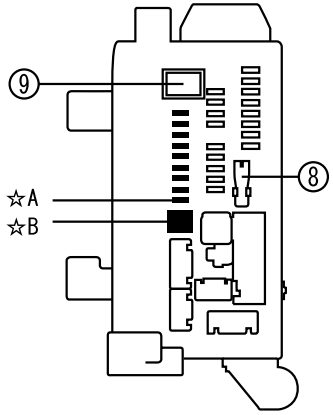

No.	PNC
⑧	※1 82616
⑨	85916D

※1

☆A		☆B	
PART No.		PART No.	
90982-08298	30A	90982-09019	5A
		90982-09020	7.5A
		90982-09021	10A
		90982-09022	15A
		90982-09023	20A
		90982-09024	25A

※1 It is included in PNC 82600.

Refer to FIG 82-02 of PNC 82141 for harnesses to connected to ③ ~ ⑥.

Refer to FIG 82-02 of PNC 82161 for harnesses to connected to ①,⑦.

8401

84J688-A

(1901-)

SWITCH ILLUST NO. 5 OF 6

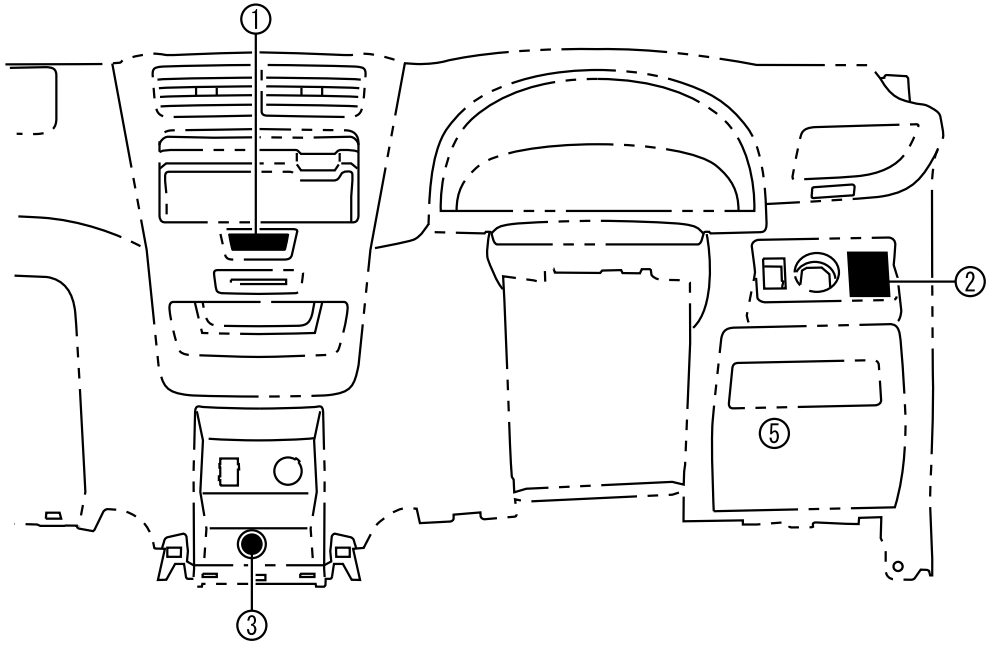

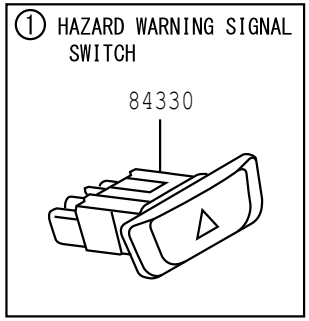

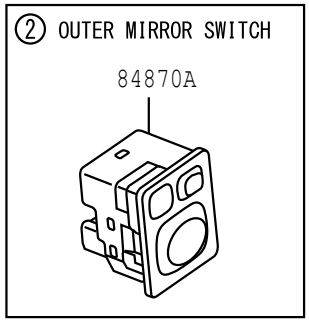

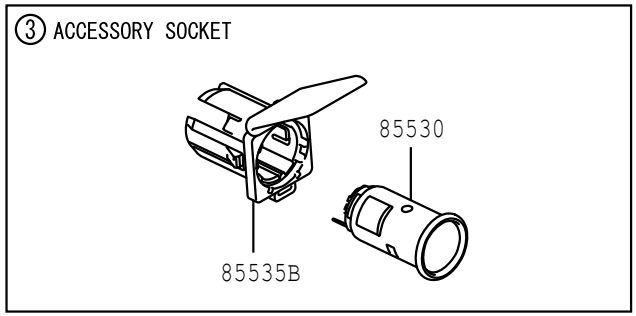

Refer to FIG 82-02 of PNC 82141 for harnesses to connected to ① ~ ③.

8401 84J689-A

(1901-)

STEERING ILLUST NO. 6 OF 6

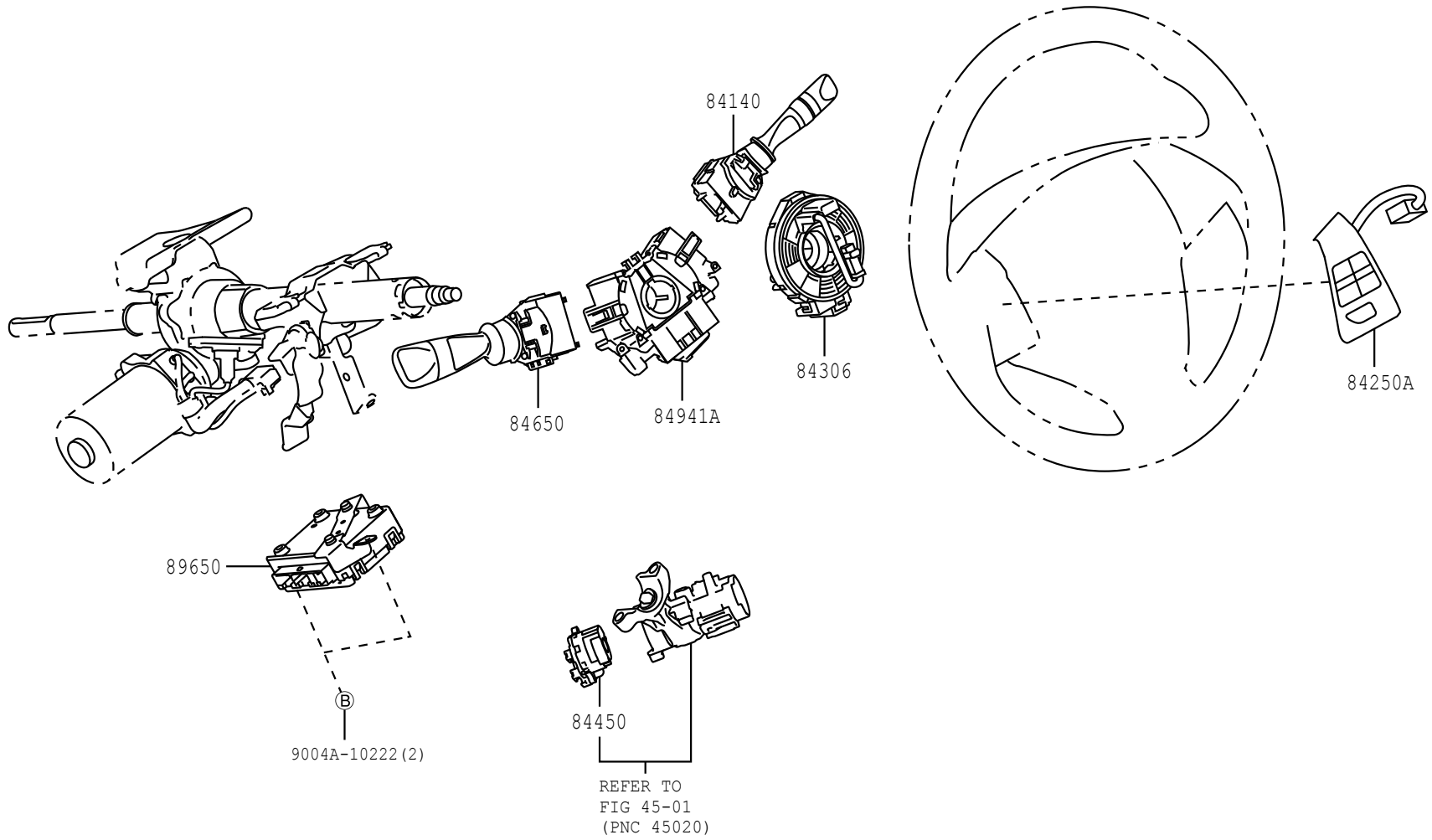

8401

84J691

PROD_DATE	MODELS	SPEC CODE	DESCRIPTION	R/P	PART NUMBER	QYT	REV_REF FR	REV_REF TO
	+----------+							
	| 28300 | RELAY ASSY, STARTER							
	+----------+							
1111 - 1507	K3VE..F651..E4AT				9004A-98006-	1		
	+----------+							
	| 28371 | RELAY, IGNITION, NO.1							
	+----------+							
1111 - 1507	K3VE,EJVE..F65#				9004A-98010-	1		
	+----------+							
	| 28850 | SENSOR ASSY, BATTERY CURRENT							
	+----------+							
1507 - 1612	1NRVE..F653				28850-BZ010-	1		
1701 - 1901	1NRVE..F653				28850-B2041-	1		
1901 -	1NRVE,2NRVE..F65#				28850-B2041-	1		
	+----------+							
	| 81980 | FLASHER ASSY, TURN SIGNAL							
	+----------+							
1111 - 1507	F65#				81980-BZ030-	1		
	+----------+							
	| 82223E | WIRE, CLUTCH START SWITCH							
	+----------+							
1507 - 1901	F653..5F				82223-BZ010-	1		
1901 -	F654..5F				82223-BZ070-	1		
1901 -	F653..5F				82223-BZ130-	1		
	+----------+							
	| 82600 | BLOCK ASSY, FUSE							
	+----------+							
1111 - 1507	F65#				82660-BZ120-	1		
1507 - 1607	F650..STD				82600-BZ080-	1		
1507 - 1607	F650..LO				82600-BZ250-	1		
1507 - 1609	F653				82600-BZ250-	1		
1610 - 1711	F653				82600-BZ430-	1		
1712 - 1804	F653				82600-BZ730-	1		
1805 - 1901	F653				82600-BZ731-	1		
1901 -	F65#				82600-BZA30-	1		

FIG.84-01 SWITCH & RELAY & COMPUTER

PROD_DATE	MODELS	SPEC CODE	DESCRIPTION	R/P	PART NUMBER	QYT	REV_REF FR	REV_REF TO
	+----------+							
	| 82616 | PULLER, FUSE							
	+----------+							
1507 - 1901	F65#				82616-58010-	1		
1901 -	F65#				82616-58010-	1		
	+----------+							
	| 82641 | RELAY, INTEGRATION NO.1							
	+----------+							
1507 - 1607	F650				82641-BZ010-	1		
1507 - 1901	F653				82641-BZ010-	1		
1901 -	F65#				82641-BZ010-	1		
	+----------+							
	| 82641C | RELAY, INTEGRATION NO.2							
	+----------+							
1507 - 1607	F650				9004A-98006-	1		
1507 - 1901	F653				9004A-98006-	1		
1901 -	F65#				9004A-98006-	1		
	+----------+							
	| 82661 | COVER, RELAY BLOCK, NO.1							
	+----------+							
1111 - 1312	F65#				82661-BZ070-	1		
1401 - 1507	F65#				82661-BZ071-	1		
1507 - 1607	F650				82661-BZ140-	1		
1507 - 1608	F653				82661-BZ140-	1		
1609 - 1901	F653				82661-BZ141-	1		
1901 -	F65#				82661-BZ141-	1		
	+----------+							
	| 82673B | BRACKET, JUNCTION BLOCK							
	+----------+							
1901 -	F65#				82673-BZ050-	1		
	+----------+							
	| 82715 | BRACKET,WIRING HARNESS CLAMP							
	+----------+							
1810 - 1901	F653..E4AT				82715-BZA50-	1		
1810 - 1901	F653..5F				82715-BZD60-	1		
1901 -	F65#..E4AT				82715-BZA50-	1		

PROD_DATE	MODELS	SPEC CODE	DESCRIPTION	R/P	PART NUMBER	QYT	REV_REF FR	REV_REF TO
	+----------+							
	| 82715 | BRACKET,WIRING HARNESS CLAMP							
	CONTINUED--+							
1901 -	F65#..5F				82715-BZD60-	1		
	+----------+							
	| 82817H | PROTECTOR, WIRING HARNESS							
	+----------+							
1507 - 1607	F650				82817-BZ130-	1		
	+----------+							
	| 83181G | SENSOR, SPEEDOMETER							
	+----------+							
1111 - 1507	F650				83181-BZ050-	1		
1111 - 1507	F651..5F				83181-BZ080-	1		
1507 - 1607	F650				83181-B6010-	1		
1507 - 1901	F653..5F				83181-B6010-	1		
1901 -	F653..5F				83181-B6010-	1		
	+----------+							
	| 83181H | RING, O (FOR SPEEDOMETER SENSOR)							
	+----------+							
1507 - 1607	F650				90043-01278-	1		
1507 - 1901	F653..5F				90043-01278-	1		
1901 -	F653..5F				90043-01278-	1		
	+----------+							
	| 83320 | GAGE ASSY, FUEL SENDER							
	+----------+							
1111 - 1507	F65#				83301-BZ150-	1		
1507 - 1901	F65#				83301-BZ190-	1		
1901 -	F65#				83301-BZ190-	1		
	+----------+							
	| 83390 | SWITCH ASSY, VACUUM WARNING							
	+----------+							
1507 - 1901	F653..E4AT				83390-B1010-	1		
1901 -	F65#..E4AT				83390-B1010-	1		
	+----------+							
	| 83530 | SWITCH ASSY, OIL PRESSURE (FOR ENGINE)							
	+----------+							
1111 - 1507	F650				83530-97202-	1		
				#	(83530-97401-)	1		

FIG.84-01 SWITCH & RELAY & COMPUTER

PROD_DATE	MODELS	SPEC CODE	DESCRIPTION	R/P	PART NUMBER	QYT	REV_REF FR	REV_REF TO
	+----------+							
	| 83530 | SWITCH ASSY, OIL PRESSURE (FOR ENGINE)							
	CONTINUED--+							
1111 - 1507	F651				83530-97401-	1		
1507 - 1607	F650				83530-B0010-	1		
				#	(83530-52050-)	1		
1507 - 1608	F653				83530-B0010-	1		
				#	(83530-52050-)	1		
1609 - 1901	F653				83530-52050-	1		
1901 -	F65#				83530-52050-	1		
	+----------+							
	| 84140 | SWITCH ASSY, HEADLAMP DIMMER							
	+----------+							
1111 - 1507	F65#				84140-BZ011-	1		
1507 - 1607	F650		L/FOG LAMP SWITCH		84140-BZ170-	1		
1507 - 1610	F653..LO		L/FOG LAMP SWITCH		84140-BZ170-	1		
1507 - 1901	F653..STD		W/FOG LAMP SWITCH		84140-BZ180-	1		
1610 - 1901	F653..LO..5F	B2AE	INDONESIA TAXI,L/FOG LAMP SWITCH		84140-BZ170-	1		
1610 - 1901	F653..LO		W/FOG LAMP SWITCH		84140-BZ180-	1		
1901 -	F653..LO..5F	B2AE	INDONESIA TAXI,L/FOG LAMP SWITCH		84140-BZ170-	1		
1901 -	F65#		W/FOG LAMP SWITCH		84140-BZ180-	1		
	+----------+							
	| 84210 | SWITCH ASSY, BACK-UP LAMP							
	+----------+							
1111 - 1507	F65#..5F				84210-BZ110-	1		
1507 - 1607	F650				84210-BZ110-	1		
1507 - 1701	F653..5F				84210-BZ110-	1		
1702 - 1901	F653..5F				84210-BZ110-	1		
1901 -	F65#..5F				84210-BZ110-	1		
	+----------+							
	| 84231A | SWITCH, COURTESY LAMP							
	+----------+							
1111 - 1305	F65#..STD				84231-BZ010-	2		
				#	(84231-52020-)	1		

PROD_DATE	MODELS	SPEC CODE	DESCRIPTION	R/P	PART NUMBER	QYT	REV_REF FR	REV_REF TO
	+----------+							
	| 84231A | SWITCH, COURTESY LAMP							
	CONTINUED--+							
1111 - 1507	F65#..LO				84231-BZ010-	4		
				#	(84231-52020-)	1		
1305 - 1507	F65#..STD				84231-BZ010-	4		
				#	(84231-52020-)	1		
1507 - 1607	F650				84231-BZ010-	4		
				#	(84231-52020-)	1		
1507 - 1901	F653				84231-BZ010-	4		
				#	(84231-52020-)	1		
1901 -	F65#				84231-BZ010-	4		
				#	(84231-52020-)	1		
	+----------+							
	| 84234D | CUSHION, COURTESY SWITCH							
	+----------+							
1111 - 1305	F65#..STD		SILVER(1E7 ,B72 ,T23 ,W09)		58159-BZ020-B0	2		
1111 - 1305	F65#..STD		BLACK(1H2 ,R56 ,S37 ,X12)		58159-BZ020-C0	2		
	+----------+							
	| 84243 | SWITCH, ENGINE HOOD							
	+----------+							
1507 - 1607	F650..LO				84243-52010-	1		
1507 - 1901	F653				84243-52010-	1		
1901 -	F65#				84243-52010-	1		
	+----------+							
	| 84248 | CLAMP, CENTER CLUSTER MODULE SWITCH HARNE							
	+----------+ SS							
1111 - 1507	F65#..5F				84248-BZ040-	1		
1507 - 1607	F650				84248-BZ041-	1		
1507 - 1901	F653..5F				84248-BZ041-	1		
1901 -	F65#..5F				84248-BZ041-	1		
	+----------+							
	| 84250A | SWITCH ASSY, STEERING PAD							
	+----------+							
1901 -	F65#..STD		SILVER(TRIM4#)		84250-BZ080-B0	1		

FIG.84-01 SWITCH & RELAY & COMPUTER

PROD_DATE	MODELS	SPEC CODE	DESCRIPTION	R/P	PART NUMBER	QYT	REV_REF FR	REV_REF TO
	+----------+							
	| 84306 | CABLE SUB-ASSY, SPIRAL							
	+----------+							
1305 - 1406	F65#				84306-B1010-	1		
1407 - 1507	F65#				84306-BZ060-	1		
				#	(84306-B1010-)	1		
1507 - 1607	F650		TYPE A		84306-BZ160-	1		
1507 - 1609	F653		TYPE A		84306-BZ160-	1		
1609 - 1901	F653		TYPE B		84306-BZ200-	1		
1901 -	F65#..STD		TYPE A		84306-BZ160-	1		
1901 -	F653..LO		TYPE B		84306-BZ200-	1		
	+----------+							
	| 84312 | PLATE, HORN CONTACT							
	+----------+							
1111 - 1305	F65#				84312-BZ010-	1		
				#	(84312-B2010-)	1		
	+----------+							
	| 84330 | SWITCH ASSY, HAZARD WARNING SIGNAL							
	+----------+							
1111 - 1507	F65#				84332-BZ110-	1		
1507 - 1607	F650				84332-BZ130-	1		
1507 - 1901	F653				84332-BZ130-	1		
1901 -	F65#				84332-BZ130-	1		
	+----------+							
	| 84340 | SWITCH ASSY, STOP LAMP							
	+----------+							
1111 - 1507	F65#				84340-BZ010-	1		
				#	(84340-B2010-)	1		
1507 - 1607	F650				84340-BZ010-	1		
				#	(84340-B2010-)	1		
1507 - 1901	F653				84340-BZ040-	1		
1901 -	F65#				84340-BZ040-	1		
	+----------+							
	| 84345 | ADJUSTER, STOP LAMP SWITCH MOUNTING							
	+----------+							
1111 - 1507	F65#				84345-BZ010-	1		
				#	(84345-B2010-)	1		

PROD_DATE	MODELS	SPEC CODE	DESCRIPTION	R/P	PART NUMBER	QYT	REV_REF FR	REV_REF TO
	+----------+							
	| 84345 | ADJUSTER, STOP LAMP SWITCH MOUNTING							
	CONTINUED--+							
1507 - 1607	F650				84345-BZ010-	1		
				#	(84345-B2010-)	1		
1507 - 1901	F653				84345-BZ010-	1		
				#	(84345-B2010-)	1		
1901 -	F65#				84345-BZ010-	1		
				#	(84345-B2010-)	1		
	+----------+							
	| 84380 | SWITCH ASSY, BRAKE WARNING TEST							
	+----------+							
1111 - 1507	F65#				84380-87Z06-	1		
1507 - 1607	F650				84380-87Z06-	1		
1507 - 1901	F653				84380-87Z06-	1		
1901 -	F65#				84380-87Z06-	1		
	+----------+							
	| 84450 | SWITCH ASSY, IGNITION OR STARTER							
	+----------+							
1111 - 1507	F65#				84450-BZ040-	1		
				#	(84450-B2010-)	1		
1507 - 1607	F650				84450-BZ040-	1		
				#	(84450-B2010-)	1		
1507 - 1901	F653				84450-BZ040-	1		
				#	(84450-B2010-)	1		
1901 -	F65#				84450-BZ040-	1		
				#	(84450-B2010-)	1		
	+----------+							
	| 84518 | HOLDER, SWITCH COVER							
	+----------+							
1507 - 1607	F650..LO				84518-BZ020-	1		
1507 - 1901	F653				84518-BZ020-	1		
1901 -	F65#				84518-BZ020-	1		
	+----------+							
	| 84520 | SWITCH ASSY, CLUTCH START							
	+----------+							
1507 - 1901	F653..5F				84520-B4010-	1		
1901 -	F653..5F				84520-B4010-	1		

FIG.84-01 SWITCH & RELAY & COMPUTER

PROD_DATE	MODELS	SPEC CODE	DESCRIPTION	R/P	PART NUMBER	QYT	REV_REF FR	REV_REF TO
	+----------+							
	| 84520E | SWITCH ASSY, CLUTCH START, NO.2							
	+----------+							
1901 -	F654..5F				84520-97202-	1		
	+----------+							
	| 84540 | SWITCH ASSY, NEUTRAL START							
	+----------+							
1111 - 1507	F651..E4AT				84540-B0010-	1		
1507 - 1901	F653..E4AT				84540-B0020-	1		
1901 -	F65#..E4AT				84540-B0020-	1		
	+----------+							
	| 84650 | SWITCH ASSY, WINDSHIELD WIPER							
	+----------+							
1111 - 1208	F65#..STD				84652-BZ010-	1		
				#	(84652-BZ090-)	1		
1209 - 1305	F65#..STD				84652-BZ090-	1		
1111 - 1507	F65#..LO				84652-BZ020-	1		
				#	(84652-B2011-)	1		
1305 - 1507	F65#..STD				84652-BZ020-	1		
				#	(84652-B2011-)	1		
1507 - 1607	F650..LO				84652-BZ250-	1		
1507 - 1607	F650..STD				84652-BZ310-	1		
1507 - 1901	F653				84652-BZ250-	1		
1901 -	F65#				84652-BZ250-	1		
	+----------+							
	| 84810 | SWITCH ASSY, POWER WINDOW REGULATOR							
	+----------+							
1111 - 1507	F65#				84810-BZ090-	3		
1507 - 1607	F650				84810-BZ090-	3		
1507 - 1901	F653				84810-BZ090-	3		
1901 -	F65#				84810-BZ090-	3		
	+----------+							
	| 84820 | MASTER SWITCH ASSY, POWER WINDOW REGULATO							
	+----------+ R							
1111 - 1507	F65#				84820-BZ060-	1		
1507 - 1607	F650				84820-BZ170-	1		

PROD_DATE	MODELS	SPEC CODE	DESCRIPTION	R/P	PART NUMBER	QYT	REV_REF FR	REV_REF TO
	+----------+							
	| 84820 | MASTER SWITCH ASSY, POWER WINDOW REGULATO							
	CONTINUED--+ R							
1507 - 1707	F653				84820-BZ170-	1		
1708 - 1901	F653				84820-BZ200-	1		
1901 -	F65#				84820-BZ200-	1		
	+----------+							
	| 84870A | SWITCH ASSY, OUTER MIRROR							
	+----------+							
1111 - 1202	F65#..LO				84870-BZ070-	1		
1203 - 1507	F65#..LO				84870-BZ071-	1		
1507 - 1901	F653				84870-BZ071-	1		
1901 -	F653..LO				84870-BZ071-	1		
1901 -	F65#..STD				84870-BZ200-	1		
	+----------+							
	| 84941A | BASE, SWITCH							
	+----------+							
1507 - 1607	F650				84941-BZ010-	1		
1507 - 1901	F653				84941-BZ010-	1		
1901 -	F65#				84941-BZ010-	1		
	+----------+							
	| 85530 | SOCKET ASSY, POWER OUTLET, NO.1							
	+----------+							
1111 - 1507	F65#				85530-33020-	1		
				#	(86830-B2010-)	1		
1507 - 1607	F650		TYPE A		85530-33020-	1		
				#	(86830-B2010-)	1		
1507 - 1612	F653		TYPE A		85530-33020-	1		
				#	(86830-B2010-)	1		
1612 - 1901	F653		TYPE B		85530-BZ080-	1		
1901 -	F65#				85530-BZ080-	2		
	+----------+							
	| 85535B | COVER, POWER OUTLET SOCKET, NO.1							
	+----------+							
1901 -	F65#				85535-BZ061-	1		

FIG.84-01 SWITCH & RELAY & COMPUTER

PROD_DATE	MODELS	SPEC CODE	DESCRIPTION	R/P	PART NUMBER	QYT	REV_REF FR	REV_REF TO
	+----------+							
	| 85535E | COVER, POWER OUTLET SOCKET, NO.2							
	+----------+							
1111 - 1507	F65#				85535-47020-	1		
				#	(86830-B2010-)	1		
1507 - 1607	F650		TYPE A		85535-47020-	1		
				#	(86830-B2010-)	1		
1507 - 1612	F653		TYPE A		85535-47020-	1		
				#	(86830-B2010-)	1		
1612 - 1901	F653		TYPE B		85535-BZ040-	1		
1901 -	F65#				85535-BZ071-	1		
	+----------+							
	| 85912E | RELAY, COMPUTER(FOR EFI)							
	+----------+							
1111 - 1507	F65#				9004A-98006-	1		
	+----------+							
	| 85913C | RELAY, HEATER, NO.1							
	+----------+							
1111 - 1507	F65#				9004A-98006-	1		
	+----------+							
	| 85916D | RELAY, FOG LAMP							
	+----------+							
1507 - 1901	F653..STD				9004A-98006-	1		
1610 - 1901	F653..LO				9004A-98006-	1		
1901 -	F65#				9004A-98006-	1		
	+----------+							
	| 85916P | RELAY, HEADLAMP							
	+----------+							
1111 - 1507	F65#				9004A-98011-	1		
	+----------+							
	| 85918A | RELAY, DOOR CONTROL							
	+----------+							
1111 - 1410	F65#..LO				85918-BZ060-	1		
1206 - 1410	F651..STD				85918-BZ060-	1		
1410 - 1507	F651				85918-BZ061-	1		
1410 - 1507	F650..LO				85918-BZ061-	1		

PROD_DATE	MODELS	SPEC CODE	DESCRIPTION	R/P	PART NUMBER	QYT	REV_REF FR	REV_REF TO
	+----------+							
	| 85925 | RELAY, RADIATOR FAN							
	+----------+							
1111 - 1507	F65#				9004A-98006-	1		
	+----------+							
	| 85930G | RELAY, ACC							
	+----------+							
1901 -	F65#				9004A-98006-	1		
	+----------+							
	| 85933 | COMPUTER, SHIFT LOCK CONTROL							
	+----------+							
1111 - 1507	F651..E4AT				85933-B0010-	1		
1507 - 1901	F653..E4AT				85933-B0010-	1		
1901 -	F65#..E4AT				85933-B0010-	1		
	+----------+							
	| 85934 | RELAY, MAGNET-CLUTCH							
	+----------+							
1111 - 1507	F65#				90049-88004-	1		
	+----------+							
	| 85935 | RELAY, FUEL PUMP							
	+----------+							
1111 - 1507	F65#				9004A-98006-	1		
	+----------+							
	| 86530 | RELAY ASSY, HORN							
	+----------+							
1111 - 1507	F65#				9004A-98006-	1		
	+----------+							
	| 88630Y | RELAY, REAR COOLER							
	+----------+							
1901 -	F65#				9004A-98006-	1		
	+----------+							
	| 89421B | SENSOR, VACU							
	+----------+ UM							
1111 - 1507	F65#				89421-BZ010-	1		
1507 - 1607	F650				89421-BZ010-	1		
	+----------+							
	| 89422A | SENSOR, WATER TEMPERATURE							
	+----------+							
1111 - 1507	F650				89422-87204-	1		
1111 - 1507	F651				89422-BZ010-	1		
1507 - 1607	F650				89422-B0010-	1		

FIG.84-01 SWITCH & RELAY & COMPUTER

PROD_DATE	MODELS	SPEC CODE	DESCRIPTION	R/P	PART NUMBER	QYT	REV_REF FR	REV_REF TO
	+----------+							
	| 89422A | SENSOR, WATER TEMPERATURE							
	CONTINUED--+							
1507 - 1901	F653				89422-BZ030-	1		
				#	(89422-33030-)	1		
1901 -	F65#				89422-BZ030-	1		
				#	(89422-33030-)	1		
	+----------+							
	| 89424B | SWITCH, INLET AIR TEMPERATURE							
	+----------+							
1111 - 1507	F65#				89424-87703-	1		
1507 - 1607	F650				89424-87703-	1		
	+----------+							
	| 89439 | BRACKET, SENSOR							
	+----------+							
1111 - 1507	F650				89439-BZ090-	1		
1507 - 1607	F650				89439-BZ090-	1		
	+----------+							
	| 89465 | SENSOR, OXYG							
	+----------+ EN							
1111 - 1507	F651				89465-BZ280-	1		
1111 - 1507	F650				89465-BZ300-	1		
1507 - 1607	F650		W/PART NUMBER MARK		89465-BZ300-	1		
1507 - 1810	F653		W/PART NUMBER MARK		89465-BZ430-	1		
	+----------+							
	| 89465A | SENSOR, OXYGEN NO.2							
	+----------+							
1810 - 1901	F653				89465-BZ340-	1		
1901 -	F65#				89465-BZ340-	1		
	+----------+							
	| 89467B | SENSOR, AIR FUEL RATIO							
	+----------+							
1810 - 1901	F653		W/PART NUMBER MARK		89467-BZ010-	1		
1901 -	F65#		W/PART NUMBER MARK		89467-BZ010-	1		
	+----------+							
	| 89530C | COMPUTER ASSY, TRANSMISSION CONTROL							
	+----------+							
1111 - 1211	F651..E4AT				89530-B0120-	1		
				#	(89530-B0121-)	1		

PROD_DATE	MODELS	SPEC CODE	DESCRIPTION	R/P	PART NUMBER	QYT	REV_REF FR	REV_REF TO
	+----------+							
	| 89530C | COMPUTER ASSY, TRANSMISSION CONTROL							
	CONTINUED--+							
1211 - 1507	F651..E4AT				89530-B0121-	1		
	+----------+							
	| 89615 | SENSOR, KNOCK CONTROL							
	+----------+							
1111 - 1212	F651				89615-BZ030-	1		
				#	(89615-20090-)	1		
1111 - 1507	F650				89615-BZ010-	1		
1212 - 1507	F651				89615-BZ040-	1		
1507 - 1607	F650				89615-BZ010-	1		
1507 - 1901	F653				89615-BZ040-	1		
1901 -	F65#				89615-BZ040-	1		
	+----------+							
	| 89650 | COMPUTER ASSY, POWER STEERING							
	+----------+							
1111 - 1507	F65#				89650-BZ020-	1		
1507 - 1607	F650				89650-BZ100-	1		
1507 - 1901	F653				89650-BZ100-	1		
1901 -	F65#		DENSO		89650-BZ290-	1		

(1111-1507)

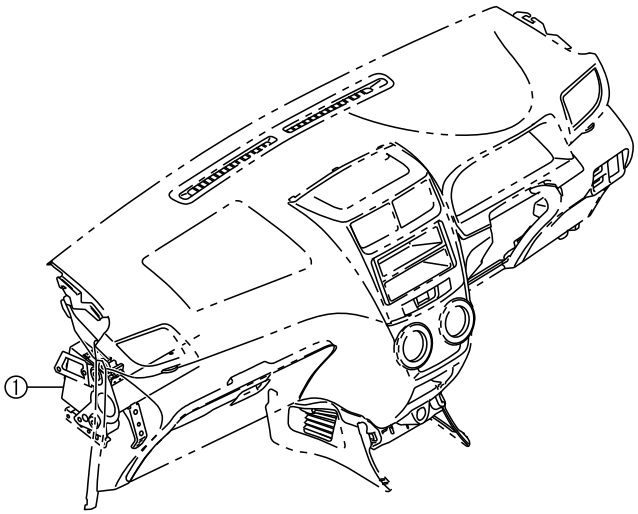

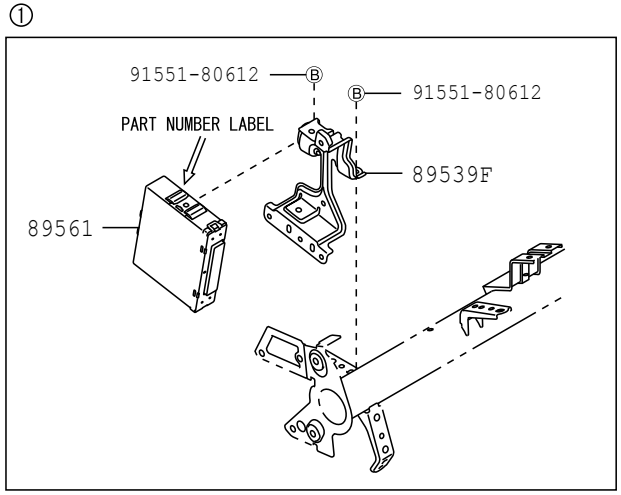

8404

84C632-A

(1507-)

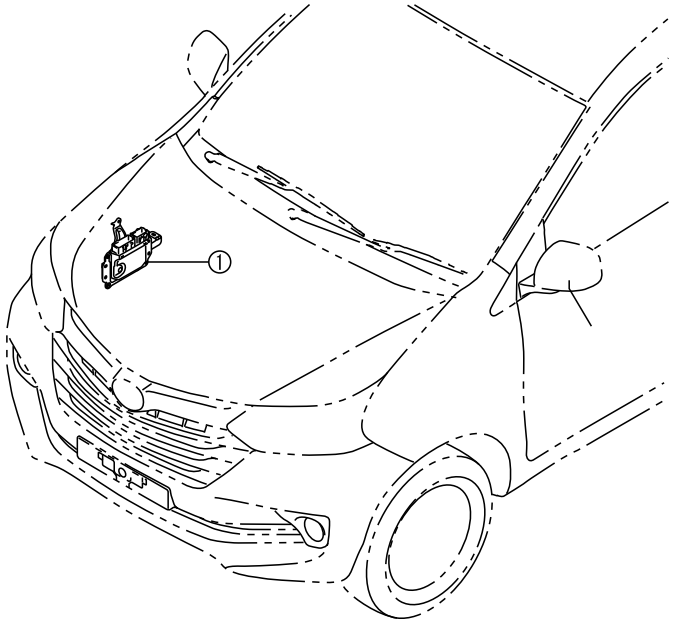

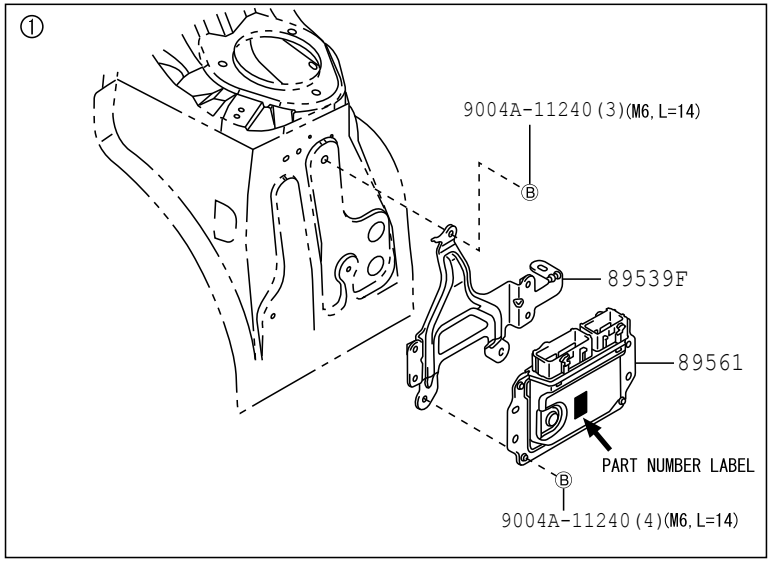

8404

84G293-C

PROD_DATE	MODELS	SPEC CODE	DESCRIPTION	R/P	PART NUMBER	QYT	REV_REF FR	REV_REF TO
	+----------+							
	| 89539F | BRACKET, COMPUTER							
	+----------+							
1111 - 1507	F65#				89539-BZ310-	1		
1507 - 1901	F65#				89539-BZ130-	1		
1901 -	F65#				89539-BZ130-	1		
	+----------+							
	| 89561 | COMPUTER, FUEL INJECTION							
	+----------+							
1111 - 1211	F651		W/PART NUMBER LABEL		89560-BZ840-	1		
1111 - 1212	F650				89560-BZ830-	1		
1211 - 1507	F651		W/PART NUMBER LABEL		89560-BZ841-	1		
1212 - 1507	F650				89560-BZ831-	1		
1507 - 1603	F653..LO..5F				89560-BZK20-	1		
1507 - 1603	F653..STD..5F				89560-BZK30-	1		
1507 - 1603	F653..LO..E4AT				89560-BZK40-	1		
1507 - 1603	F653..STD..E4AT				89560-BZK50-	1		
1507 - 1607	F650				89560-BZC00-	1		
1604 - 1701	F653..LO..5F				89560-BZK21-	1		
1604 - 1701	F653..STD..5F				89560-BZK31-	1		
1604 - 1701	F653..LO..E4AT				89560-BZK41-	1		
1604 - 1701	F653..STD..E4AT				89560-BZK51-	1		
1702 - 1810	F653..LO..5F		FUJITSU TEN,W/PART NUMBER LABEL		89560-BZK22-	1		
1702 - 1810	F653..STD..5F		FUJITSU TEN,W/PART NUMBER LABEL		89560-BZK32-	1		
1702 - 1810	F653..LO..E4AT		FUJITSU TEN,W/PART NUMBER LABEL		89560-BZK42-	1		
1702 - 1810	F653..STD..E4AT		FUJITSU TEN,W/PART NUMBER LABEL		89560-BZK52-	1		
1810 - 1901	F653..LO..5F		DENSO,W/PART NUMBER LABEL		89560-BY050-	1		

FIG.84-04 ELECTRONIC FUEL INJECTION SYSTEM

PROD_DATE	MODELS	SPEC CODE	DESCRIPTION	R/P	PART NUMBER	QYT	REV_REF FR	REV_REF TO
	+----------+							
	| 89561 | COMPUTER, FUEL INJECTION							
	CONTINUED--+							
1810 - 1901	F653..STD..5F		DENSO,W/PART NUMBER LABEL		89560-BY060-	1		
1810 - 1901	F653..LO..E4AT		DENSO,W/PART NUMBER LABEL		89560-BY070-	1		
1810 - 1901	F653..STD..E4AT		DENSO,W/PART NUMBER LABEL		89560-BY080-	1		
1901 -	F653..LO..5F		DENSO		89560-BY050-	1		
1901 -	F653..STD..5F		DENSO		89560-BY060-	1		
1901 -	F653..LO..E4AT		DENSO		89560-BY070-	1		
1901 -	F653..STD..E4AT		DENSO		89560-BY080-	1		
1901 -	F654..5F		DENSO		89560-BY090-	1		
1901 -	F654..E4AT		DENSO		89560-BY100-	1		

(1111-)E4AT

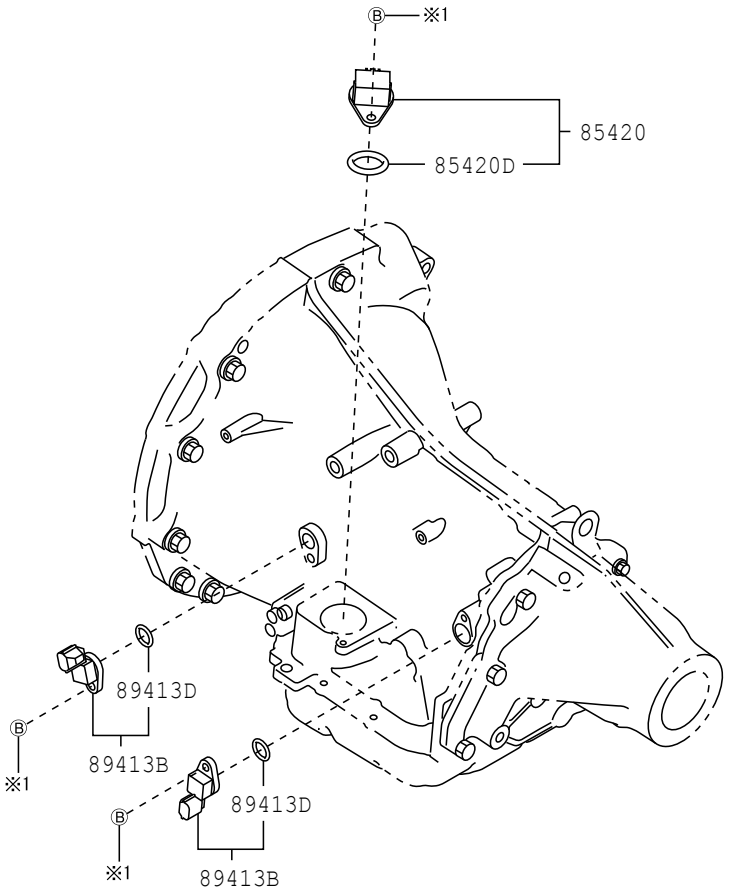

※1 90041-20004 (-1507)
90041-05410 (1507-)

8410

84C634-B

FIG.84-10 OVERDRIVE & ELECTRONIC CONTROLLED TRANSMISSION

PROD_DATE	MODELS	SPEC CODE	DESCRIPTION	R/P	PART NUMBER	QYT	REV_REF FR	REV_REF TO
	+----------+							
	| 85420 |	SOLENOID ASSY, TRANSMISSION						
	+----------+							
1111 - 1507	F651..E4AT				G1406-97201-	1		
1507 - 1901	F653..E4AT				G1406-B1010-	1		
1901 -	F65#..E4AT				G1406-B1010-	1		
	+----------+							
	| 85420D |	RING, O (FOR TRANSMISSION SOLENOID)						
	+----------+							
1111 - 1507	F651..E4AT				90043-01281-	1		
1507 - 1901	F653..E4AT				44618-B1010-	1		
1901 -	F65#..E4AT				44618-B1010-	1		
	+----------+							
	| 89413B |	SENSOR, TRANSMISSION REVOLUTION						
	+----------+							
1111 - 1507	F651..E4AT				89413-97202-	2		
1507 - 1901	F653..E4AT				89413-97202-	2		
1901 -	F65#..E4AT				89413-97202-	2		
	+----------+							
	| 89413D |	RING, O(FOR TRANSMISSION REVOLUTION SENSO						
	+----------+	R)						
1111 - 1507	F651..E4AT				90043-01278-	2		
1507 - 1901	F653..E4AT				90043-01278-	2		
1901 -	F65#..E4AT				90043-01278-	2		

FIG.84-14 ABS & VSC

(1901-)

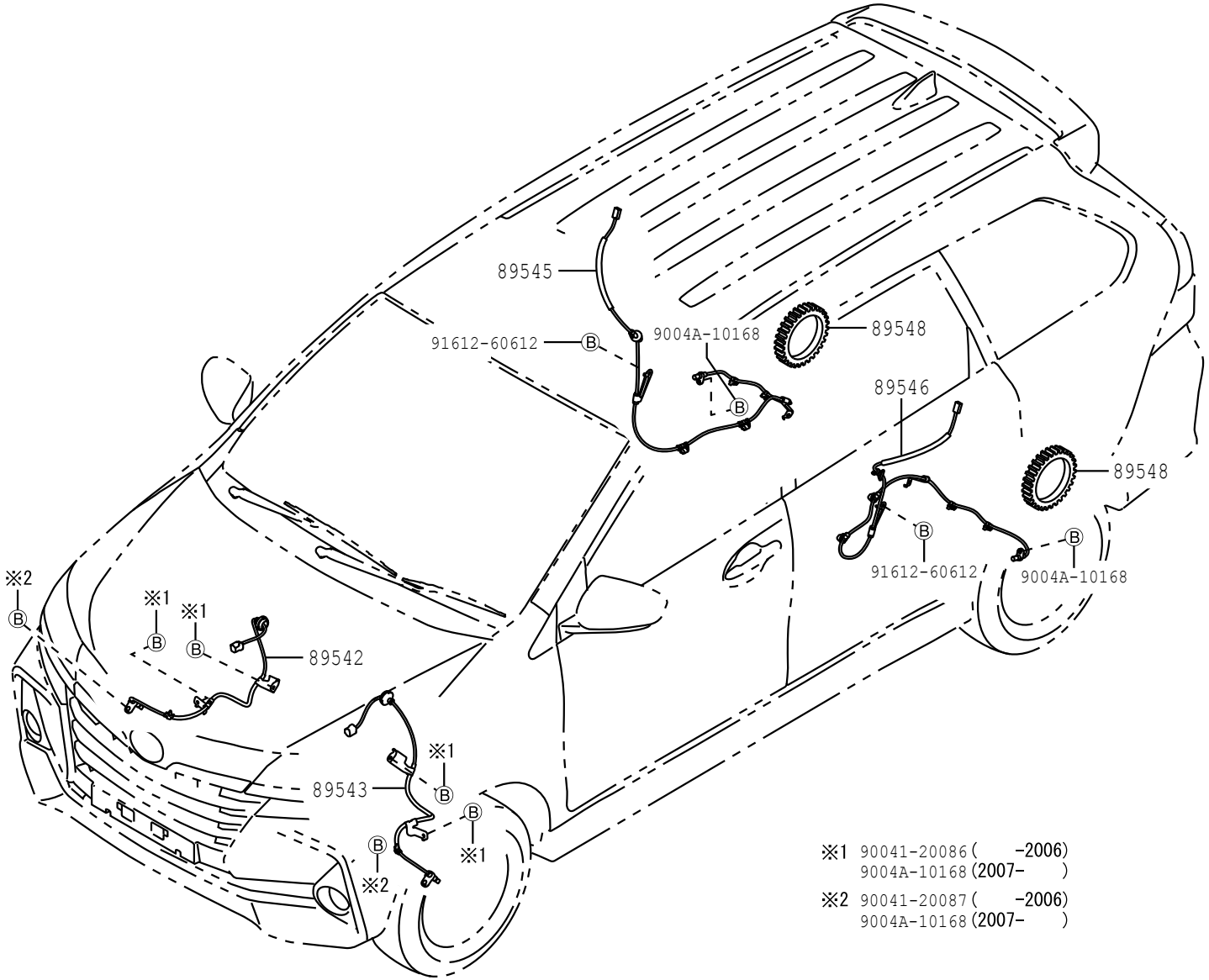

8414

84J574-B

PROD_DATE	MODELS	SPEC CODE	DESCRIPTION	R/P	PART NUMBER	QYT	REV_REF FR	REV_REF TO
	+----------+							
	| 89542 |		SENSOR, SPEED, FRONT RH					
	+----------+							
1901 -	F654				89542-BZ090-	1		
	+----------+							
	| 89543 |		SENSOR, SPEED, FRONT LH					
	+----------+							
1901 -	F654				89543-BZ090-	1		
	+----------+							
	| 89545 |		SENSOR, SPEED, REAR RH					
	+----------+							
1901 -	F654				89545-BZ030-	1		
	+----------+							
	| 89546 |		SENSOR, SPEED, REAR LH					
	+----------+							
1901 -	F654				89546-BZ030-	1		
	+----------+							
	| 89548 |		ROTOR, SKID CONTROL SENSOR					
	+----------+							
1901 -	F654				89547-97506-	2		

(1610-)

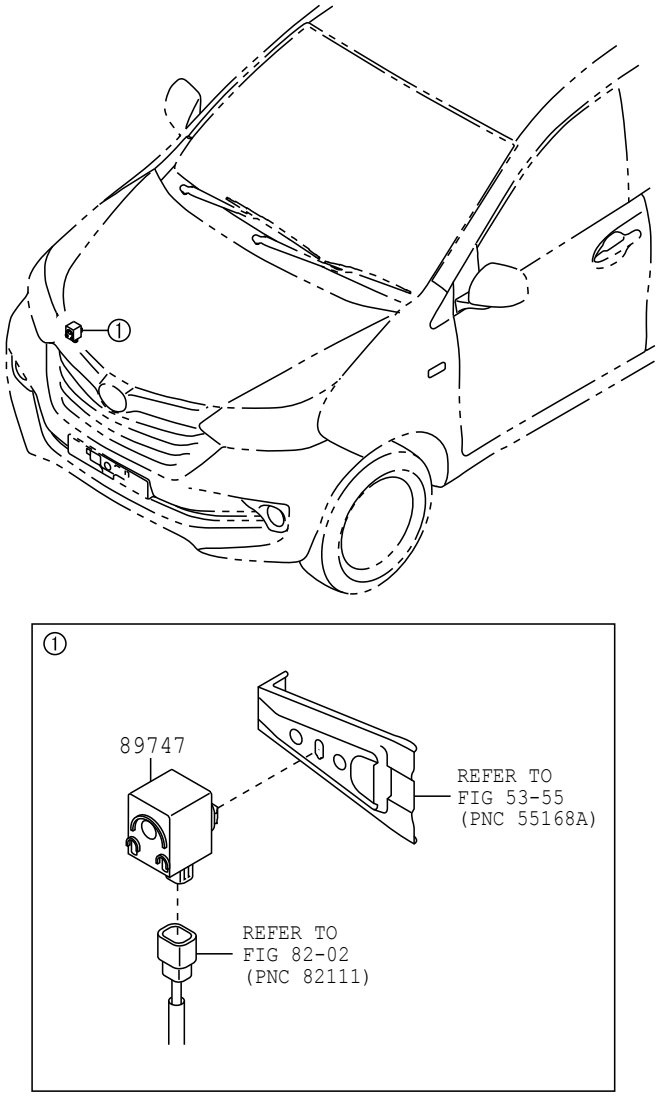

8420

84H827

FIG.84-20 WIRELESS DOOR LOCK

PROD_DATE	MODELS	SPEC CODE	DESCRIPTION	R/P	PART NUMBER	QYT	REV_REF	
							FR	TO
	+----------+ | 89747 | BUZZER, WIRELESS DOOR LOCK +----------+							
1610 - 1901	F653				89747-30040-	1		
1901 -	F65#				89747-30040-	1		

FIG.84-21 AIR BAG

(1305-1507)

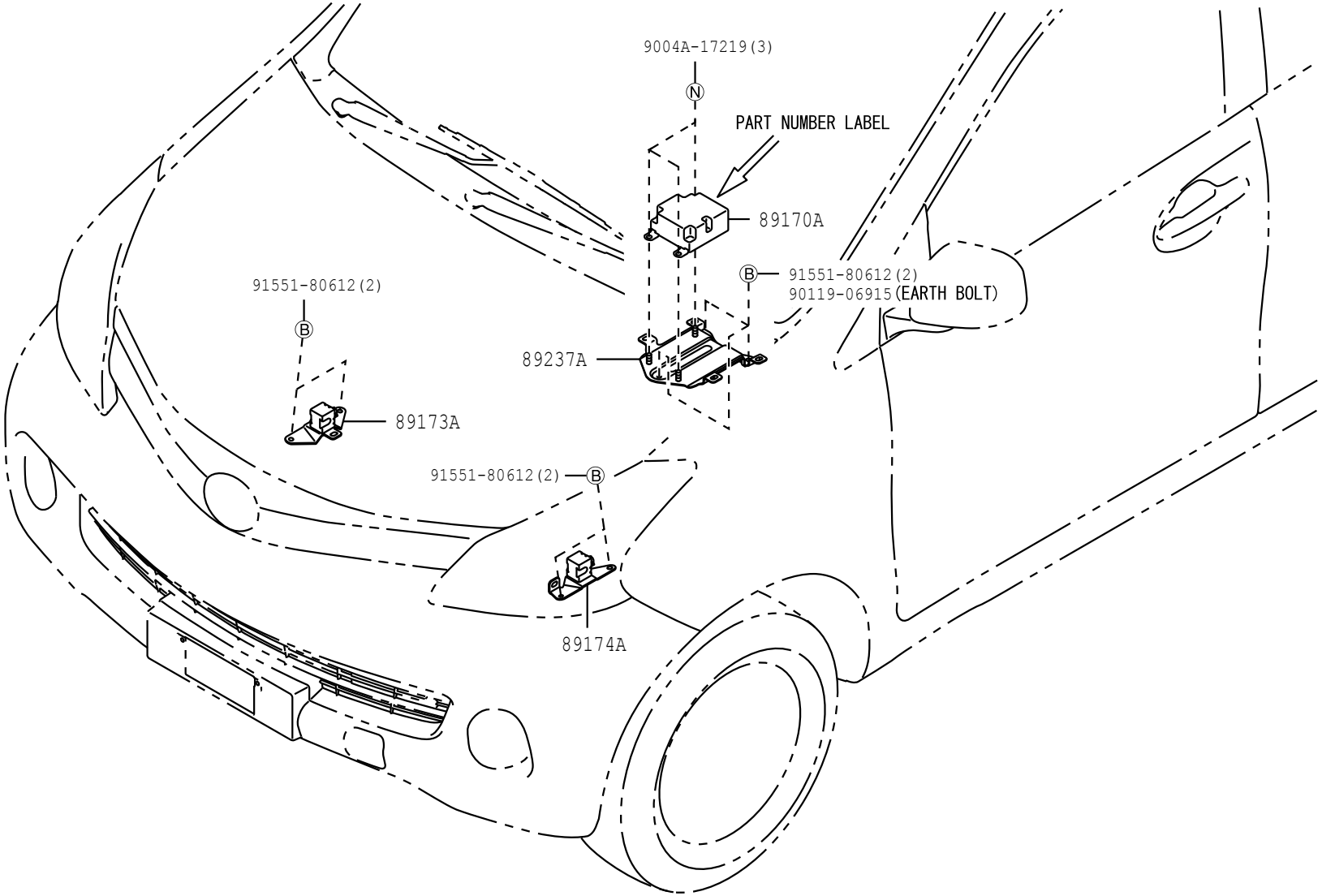

8421

84E451

FIG.84-21 AIR BAG

(1507-)

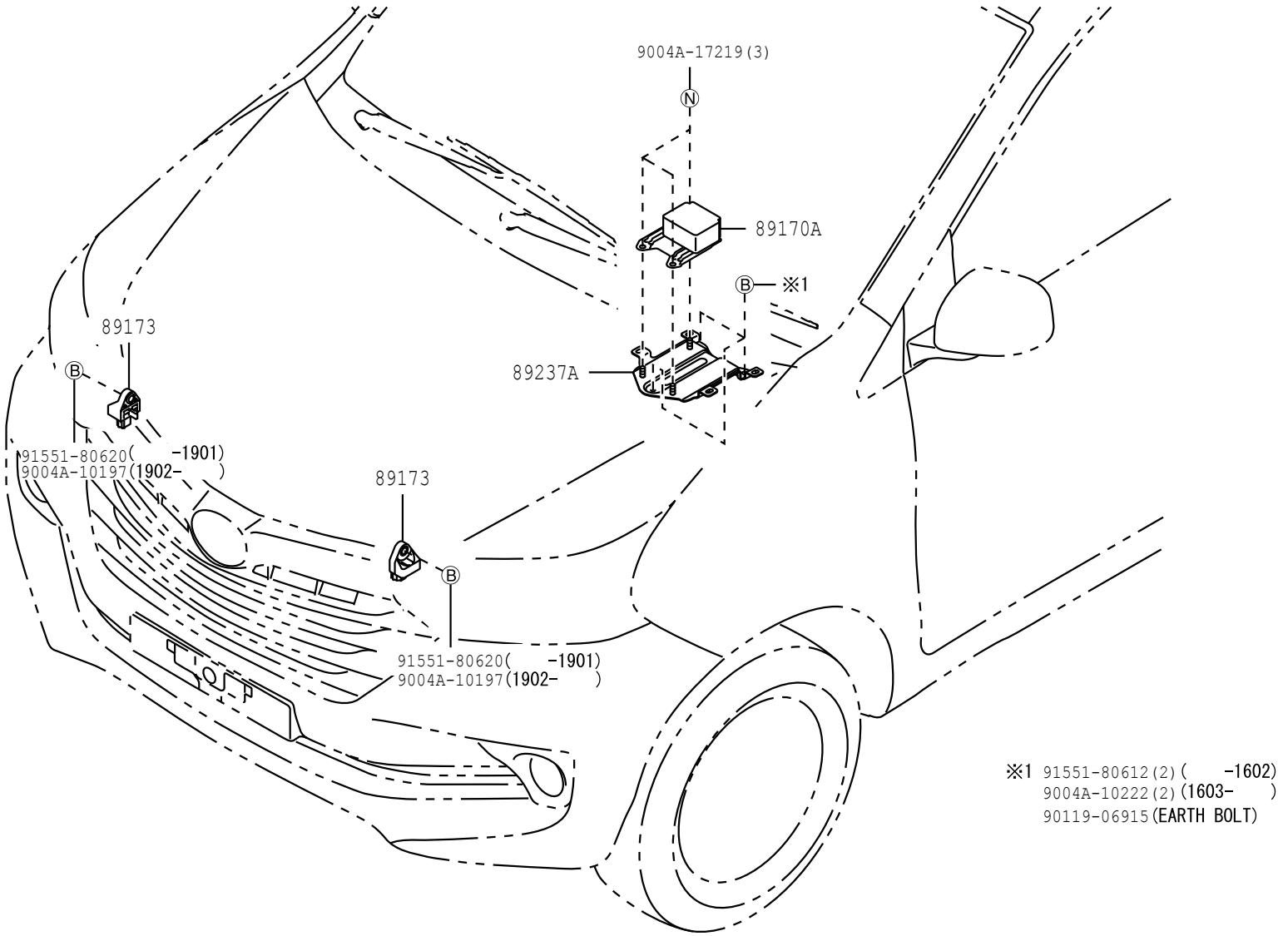

8421

84G294-D

FIG.84-21 AIR BAG

PROD_DATE	MODELS	SPEC CODE	DESCRIPTION	R/P	PART NUMBER	QYT	REV_REF FR	REV_REF TO
	+----------+							
	| 89170A | COMPUTER ASSY, AIR BAG							
	+----------+							
1305 - 1507	F65#		W/PART NUMBER LABEL		89170-BZ380-	1		
1507 - 1607	F650				89170-BZ440-	1		
1507 - 1901	F653				89170-BZ440-	1		
1901 -	F65#				89170-BZ620-	1		
	+----------+							
	| 89173 | SENSOR, AIR BAG, FRONT							
	+----------+							
1507 - 1901	F65#				89173-BZ120-	2		
1901 -	F65#				89173-BZ120-	2		
	+----------+							
	| 89173A | SENSOR, AIR BAG, FRONT RH							
	+----------+							
1305 - 1507	F65#				89173-BZ080-	1		
	+----------+							
	| 89174A | SENSOR, AIR BAG, FRONT LH							
	+----------+							
1305 - 1507	F65#				89174-BZ040-	1		
	+----------+							
	| 89237A | BRACKET, COMPUTER UNIT							
	+----------+							
1305 - 1507	F65#				89237-BZ040-	1		
1507 - 1607	F650				89237-BZ040-	1		
1507 - 1901	F653				89237-BZ040-	1		
1901 -	F65#				89237-BZ040-	1		

(1507-)F653,654..STD

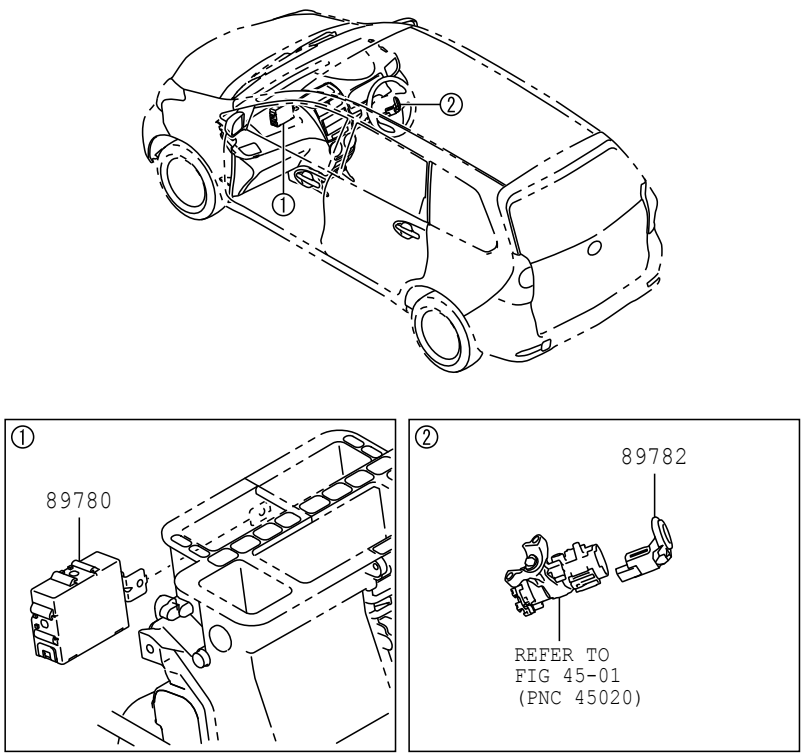

8424

84G295

FIG.84-24 ANTI-THEFT DEVICE

PROD_DATE	MODELS	SPEC CODE	DESCRIPTION	R/P	PART NUMBER	QYT	REV_REF FR	REV_REF TO
	89780		COMPUTER ASSY, TRANSPONDER KEY					
1507 - 1901	F653..STD				89780-BZ140-	1		
1901 -	F65#..STD				89780-BZ140-	1		
	89782		COIL, TRANSPONDER KEY					
1507 - 1901	F653..STD				89782-BZ080-	1		
1901 -	F65#..STD				89782-BZ080-	1		

FIG. 85-01 WINDSHIELD WIPER

(1111-1507)

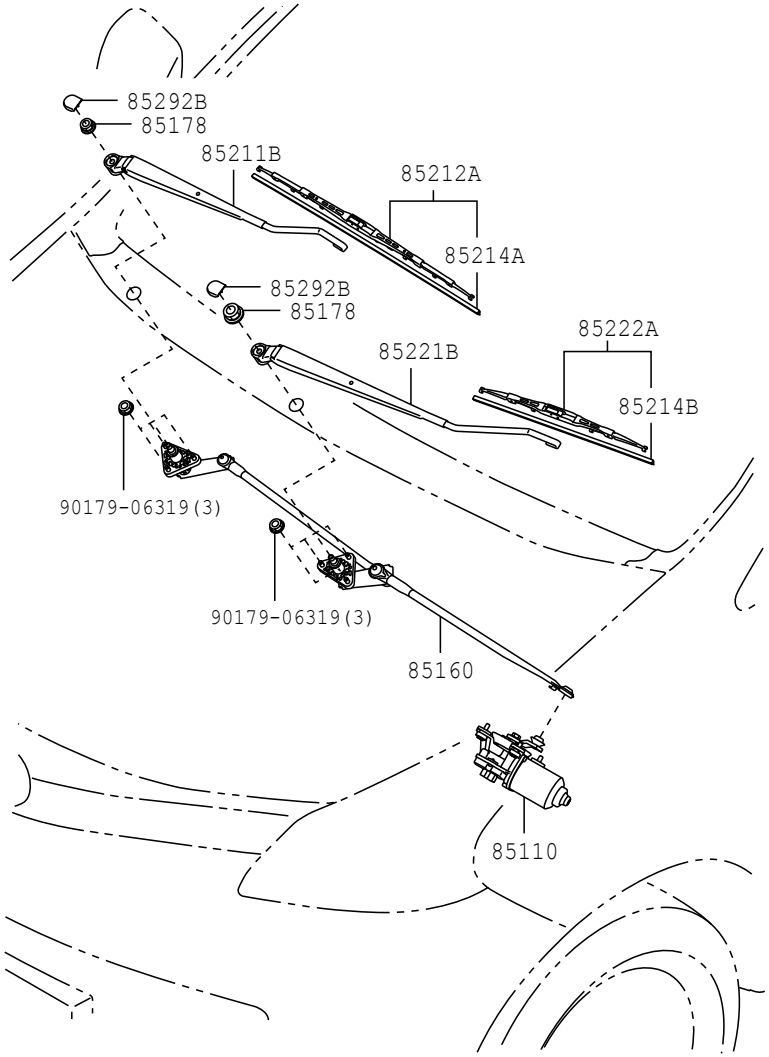

8501

852744-A

FIG. 85-01 WINDSHIELD WIPER

(1507-)

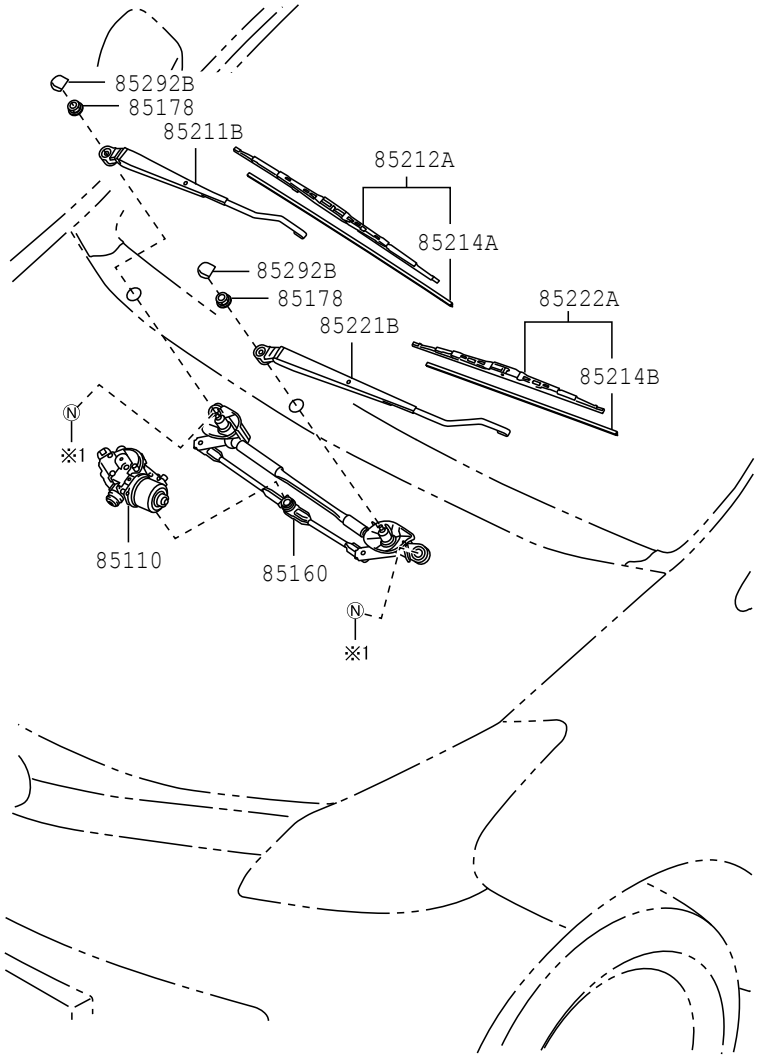

※1 90041-20250(-1509)
9004A-11329(1510-)

8501

853409-A

PROD_DATE	MODELS	SPEC CODE	DESCRIPTION	R/P	PART NUMBER	QYT	REV_REF FR	REV_REF TO
	+----------+							
	| 85110 | MOTOR ASSY, WINDSHIELD WIPER							
	+----------+							
1111 - 1303	F65#				85110-BZ150-	1		
1304 - 1507	F65#				85110-BZ151-	1		
1507 - 1607	F650				85110-BZ230-	1		
1507 - 1901	F653				85110-BZ230-	1		
1901 -	F65#				85110-BZ230-	1		
	+----------+							
	| 85160 | LINK ASSY, WINDSHIELD WIPER							
	+----------+							
1111 - 1507	F65#				85150-BZ150-	1		
1507 - 1607	F650				85150-BZ230-	1		
1507 - 1901	F653				85150-BZ230-	1		
1901 -	F65#				85150-BZ230-	1		
	+----------+							
	| 85178 | NUT (FOR FRONT WIPER ARM SETTING)							
	+----------+							
1111 - 1507	F65#				81128-87205-	2		
1507 - 1607	F650				81128-87205-	2		
1507 - 1901	F653				81128-87205-	2		
1901 -	F65#				81128-87205-	2		
	+----------+							
	| 85211B | ARM, FRONT WIPER, RH							
	+----------+							
1111 - 1507	F65#				85211-BZ060-	1		
1507 - 1607	F650				85211-BZ250-	1		
1507 - 1901	F653				85211-BZ250-	1		
1901 -	F65#				85211-BZ250-	1		
	+----------+							
	| 85212A | BLADE, FR WIPER, RH							
	+----------+							
1111 - 1507	F65#				85212-BZ060-	1		
				#	(85212-B4010-)	1		
1507 - 1607	F650				85212-BZ280-	1		

FIG.85-01 WINDSHIELD WIPER

PROD_DATE	MODELS	SPEC CODE	DESCRIPTION	R/P	PART NUMBER	QYT	REV_REF FR	REV_REF TO
	+----------+							
	| 85212A | BLADE, FR WIPER, RH							
	CONTINUED--+							
1507 - 1901	F653				85212-BZ280-	1		
1901 -	F65#				85212-BZ280-	1		
	+----------+							
	| 85214A | RUBBER, WIPER, RH							
	+----------+							
1111 - 1507	F65#				85214-BZ090-	1		
				#	(85214-B2030-)	1		
1507 - 1607	F650				85214-BZ250-	1		
1507 - 1901	F653				85214-BZ250-	1		
1901 -	F65#				85214-BZ250-	1		
	+----------+							
	| 85214B | RUBBER, WIPER, LH							
	+----------+							
1111 - 1507	F65#				85214-BZ220-	1		
1507 - 1607	F650				85214-BZ280-	1		
1507 - 1901	F653				85214-BZ280-	1		
1901 -	F65#				85214-BZ280-	1		
	+----------+							
	| 85221B | ARM, FRONT WIPER, LH							
	+----------+							
1111 - 1507	F65#				85221-BZ140-	1		
1507 - 1607	F650				85221-BZ250-	1		
1507 - 1901	F653				85221-BZ250-	1		
1901 -	F65#				85221-BZ250-	1		
	+----------+							
	| 85222A | BLADE, FR WIPER, LH							
	+----------+							
1111 - 1507	F65#				85222-BZ140-	1		
1507 - 1607	F650				85222-BZ290-	1		
1507 - 1901	F653				85222-BZ290-	1		
1901 -	F65#				85222-BZ290-	1		

FIG.85-01 WINDSHIELD WIPER

PROD_DATE	MODELS	SPEC CODE	DESCRIPTION	R/P	PART NUMBER	QYT	REV_REF FR	REV_REF TO
	+----------+ | 85292B | CAP, FRONT WIPER ARM HEAD +----------+							
1111 - 1507	F65#				85292-12020-	2		
1507 - 1607	F65#				85292-12020-	2		
1608 - 1901	F653				85292-BZ110-	2		
				#	(85292-12020-)	1		
1901 -	F65#				85292-BZ110-	2		
				#	(85292-12020-)	1		

FIG.85-02 REAR WIPER

(1111-)F653,654 ; (1111-)F650,651..LO ; (1305-)F650,651..STD

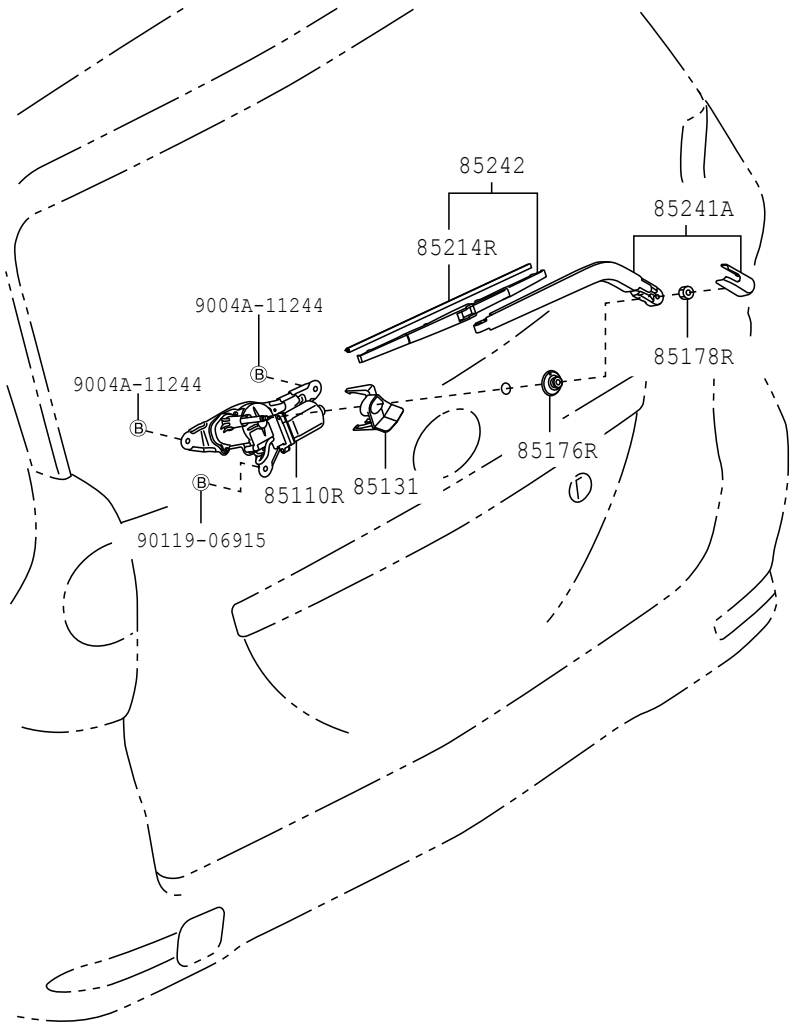

8502 852747-B

FIG.85-02 REAR WIPER

PROD_DATE	MODELS	SPEC CODE	DESCRIPTION	R/P	PART NUMBER	QYT	REV_REF FR	REV_REF TO
	85110R	MOTOR ASSY, REAR WIPER						
1111 - 1507	F65#..LO				85130-BZ130-	1		
1305 - 1507	F65#..STD				85130-BZ130-	1		
1507 - 1607	F650..LO				85130-BZ130-	1		
1507 - 1901	F653				85130-BZ130-	1		
1901 -	F65#				85130-BZ130-	1		
	85131	COVER, REAR WIPER MOTOR						
1111 - 1507	F65#..LO				85131-BZ020-	1		
1305 - 1507	F65#..STD				85131-BZ020-	1		
1507 - 1607	F650..LO				85131-BZ020-	1		
1507 - 1901	F653				85131-BZ020-	1		
1901 -	F65#				85131-BZ020-	1		
	85176R	CAP, REAR WIPER LINK						
1111 - 1507	F65#..LO				85176-BZ010-	1		
1305 - 1507	F65#..STD				85176-BZ010-	1		
1507 - 1607	F650..LO				85176-BZ010-	1		
1507 - 1901	F653				85176-BZ010-	1		
1901 -	F65#				85176-BZ010-	1		
	85178R	NUT (FOR REAR WIPER ARM SETTING)						
1111 - 1204	F65#..LO				94130-60640-	1		
1205 - 1507	F65#..LO				9004A-17218-	1		
1305 - 1507	F65#..STD				9004A-17218-	1		
1507 - 1607	F650..LO				9004A-17218-	1		
1507 - 1901	F653				9004A-17218-	1		
1901 -	F65#				9004A-17218-	1		

FIG.85-02 REAR WIPER

PROD_DATE	MODELS	SPEC CODE	DESCRIPTION	R/P	PART NUMBER	QYT	REV_REF FR	REV_REF TO
	+----------+							
	| 85214R | RUBBER, REAR WIPER							
	+----------+							
1111 - 1507	F65#..LO				85243-BZ020-	1		
1305 - 1507	F65#..STD				85243-BZ020-	1		
1507 - 1607	F650..LO				85243-BZ020-	1		
1507 - 1901	F653				85243-BZ020-	1		
1901 -	F65#				85243-BZ020-	1		
	+----------+							
	| 85241A | ARM, REAR WIPER							
	+----------+							
1111 - 1507	F65#..LO				85241-BZ020-	1		
1305 - 1507	F65#..STD				85241-BZ020-	1		
1507 - 1607	F650..LO				85241-BZ020-	1		
1507 - 1901	F653				85241-BZ020-	1		
1901 -	F65#				85241-BZ020-	1		
	+----------+							
	| 85242 | BLADE, RR WIPER							
	+----------+							
1111 - 1507	F65#..LO				85242-BZ120-	1		
1305 - 1507	F65#..STD				85242-BZ120-	1		
1507 - 1607	F650..LO				85242-BZ120-	1		
1507 - 1901	F653				85242-BZ120-	1		
1901 -	F65#				85242-BZ120-	1		

FIG. 85-03 WINDSHIELD WASHER

(1111-1507)

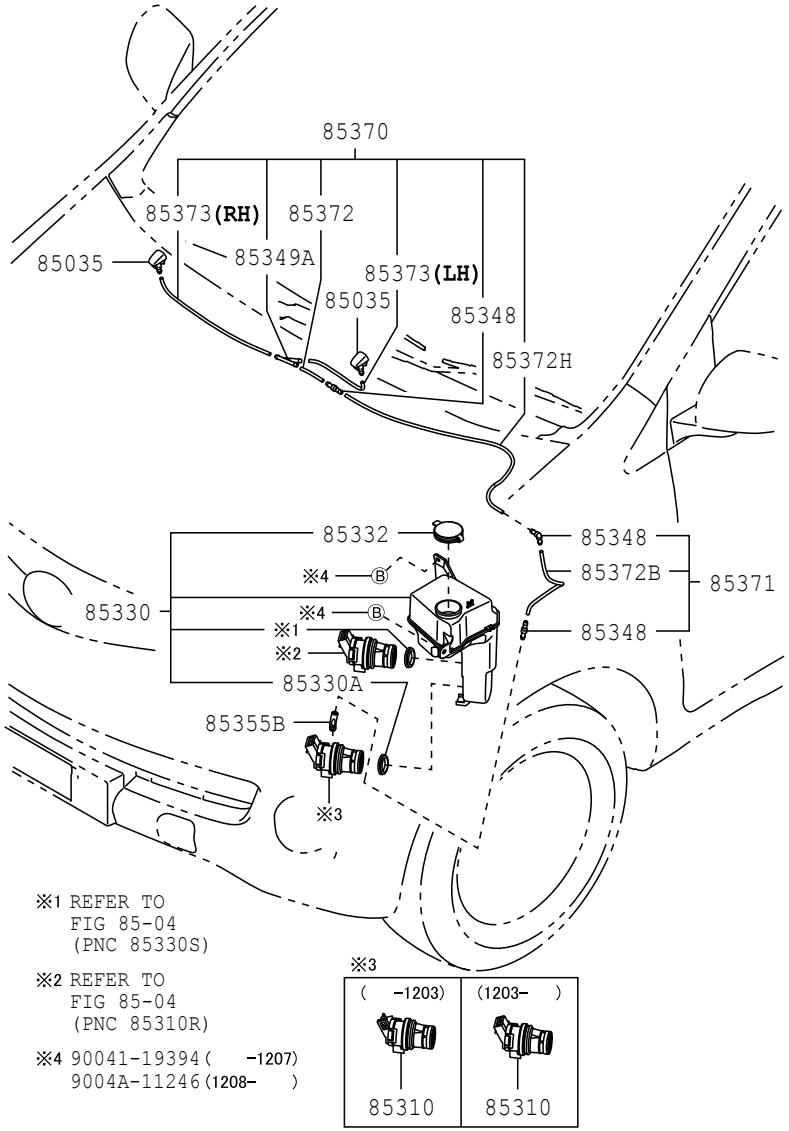

8503

852749-A

FIG. 85-03 WINDSHIELD WASHER

(1507-)

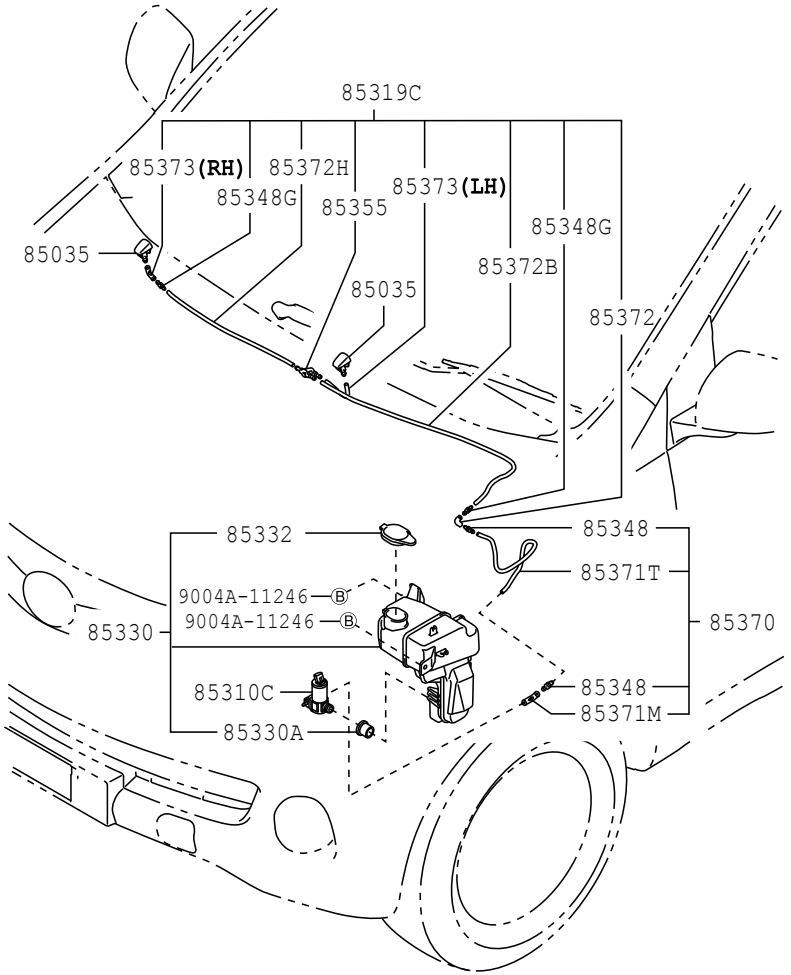

8503

853411

PROD_DATE	MODELS	SPEC CODE	DESCRIPTION	R/P	PART NUMBER	QYT	REV_REF FR	REV_REF TO
	+----------+							
	| 85035 | NOZZLE SUB-ASSY, WASHER							
	+----------+							
1111 - 1507	F65#		ANGLE O		85381-BZ130-	2		
1507 - 1607	F650				85381-BZ220-	2		
1507 - 1901	F653				85381-BZ220-	2		
1901 -	F65#				85381-BZ220-	2		
	+----------+							
	| 85310 | MOTOR AND PUMP ASSY, WINDSHIELD WASHER							
	+----------+							
1111 - 1203	F65#				85330-BZ080-	1		
1203 - 1507	F65#				85330-BZ060-	1		
	+----------+							
	| 85310C | MOTOR & PUMP ASSY, WASHER							
	+----------+							
1507 - 1607	F650..LO				85330-BZ120-	1		
1507 - 1607	F650..STD				85330-BZ130-	1		
1507 - 1610	F653				85330-BZ120-	1		
1610 - 1901	F653				85330-BZ180-	1		
1901 -	F65#				85330-BZ180-	1		
	+----------+							
	| 85319C | HOSE, WASHER							
	+----------+							
1507 - 1607	F650				85370-BZ880-	1		
1507 - 1901	F653				85370-BZ880-	1		
1901 -	F65#				85370-BZ880-	1		
	+----------+							
	| 85330 | JAR ASSY, WINDSHIELD WASHER							
	+----------+							
1111 - 1305	F65#..STD		FR WASHER ONLY		85315-BZ130-	1		
1111 - 1507	F65#..LO		FR & RR WASHER		85315-BZ120-	1		
1305 - 1507	F65#..STD		FR & RR WASHER		85315-BZ120-	1		
1507 - 1607	F650				85315-BZ160-	1		
1507 - 1901	F653				85315-BZ160-	1		
1901 -	F65#				85315-BZ160-	1		

FIG.85-03 WINDSHIELD WASHER

PROD_DATE	MODELS	SPEC CODE	DESCRIPTION	R/P	PART NUMBER	QYT	REV_REF FR	REV_REF TO
	+----------+							
	| 85330A | BUSH, WINDSHIELD WASHER JAR							
	+----------+							
1111 - 1507	F65#				85373-97202-	1		
1507 - 1607	F650				90044-80454-	1		
1507 - 1901	F653				90044-80454-	1		
1901 -	F65#				90044-80454-	1		
	+----------+							
	| 85332 | CAP, WINDSHIELD WASHER JAR							
	+----------+							
1111 - 1507	F65#				85332-87401-	1		
1507 - 1607	F650				85332-97202-	1		
1507 - 1901	F653				85332-97202-	1		
1901 -	F65#				85332-97202-	1		
	+----------+							
	| 85348 | JOINT, WINDSHIELD WASHER HOSE, NO.1							
	+----------+							
1111 - 1507	F65#				85349-87201-	3		
1507 - 1607	F650				85317-BZ080-	2		
1507 - 1901	F653				85317-BZ080-	2		
1901 -	F65#				85317-BZ080-	2		
	+----------+							
	| 85348G | JOINT, WINDSHIELD WASHER HOSE, NO.2							
	+----------+							
1507 - 1607	F650				85317-BZ080-	2		
1507 - 1901	F653				85317-BZ080-	2		
1901 -	F65#				85317-BZ080-	2		
	+----------+							
	| 85349A | JOINT, WINDSHIELD WASHER HOSE, NO.2							
	+----------+							
1111 - 1507	F65#				85376-B1010-	1		
	+----------+							
	| 85355 | VALVE, WINDSHIELD WASHER HOSE							
	+----------+							
1507 - 1607	F650				85376-B1010-	1		
1507 - 1901	F653				85376-B1010-	1		

PROD_DATE	MODELS	SPEC CODE	DESCRIPTION	R/P	PART NUMBER	QYT	REV_REF FR	REV_REF TO
	+----------+							
	| 85355 | VALVE, WINDSHIELD WASHER HOSE							
	CONTINUED--+							
1901 -	F65#				85376-B1010-	1		
	+----------+							
	| 85355B | JOINT, ELBOW NO.2							
	+----------+							
1111 - 1507	F65#				85355-87503-	1		
	+----------+							
	| 85370 | HOSE ASSY, WINDSHIELD WASHER							
	+----------+							
1111 - 1507	F65#				85370-BZ190-	1		
1507 - 1607	F650				85370-BZ890-	1		
1507 - 1901	F653				85370-BZ890-	1		
1901 -	F65#				85370-BZ890-	1		
	+----------+							
	| 85371 | HOSE, WINDSHIELD WASHER (FROM MOTOR TO JOINT)							
	+----------+							
1111 - 1507	F65#		H,L=340		85370-BZ590-	1		
	+----------+							
	| 85371M | HOSE, WINDSHIELD WASHER (FROM JOINT TO TANK)							
	+----------+							
1507 - 1607	F650				85355-87701-	1		
1507 - 1901	F653				85355-87701-	1		
1901 -	F65#				85355-87701-	1		
	+----------+							
	| 85371T | HOSE, WINDSHIELD WASHER (FROM JOINT TO JOINT)							
	+----------+							
1507 - 1607	F650		*H,L=470		85374-BZ880-	1		
1507 - 1901	F653		*H,L=470		85374-BZ880-	1		
1901 -	F65#		*H,L=470		85374-BZ880-	1		
	+----------+							
	| 85372 | HOSE, WINDSHIELD WASHER (FROM JOINT TO JOINT), NO.1							
	+----------+							
1111 - 1507	F65#		*H,L=480		85374-BZ390-	1		
1507 - 1607	F650				85355-87701-	1		
1507 - 1901	F653				85355-87701-	1		
1901 -	F65#				85355-87701-	1		

FIG.85-03 WINDSHIELD WASHER

PROD_DATE	MODELS	SPEC CODE	DESCRIPTION	R/P	PART NUMBER	QYT	REV_REF FR	REV_REF TO
	+----------+							
	| 85372B | HOSE, WINDSHIELD WASHER (FROM JOINT TO JOINT), NO.2							
	+----------+							
1111 - 1507	F65#		*H,L=340		85374-BZ380-	1		
1507 - 1607	F650		*H,L=600		85374-BZB10-	1		
1507 - 1901	F653		*H,L=600		85374-BZB10-	1		
1901 -	F65#		*H,L=600		85374-BZB10-	1		
	+----------+							
	| 85372H | HOSE, WINDSHIELD WASHER (FROM JOINT TO JOINT), NO.3							
	+----------+							
1111 - 1507	F65#		*H,L=80		85374-BZ400-	1		
1507 - 1607	F650		*H,L=380		85374-BZB00-	1		
1507 - 1901	F653		*H,L=380		85374-BZB00-	1		
1901 -	F65#		*H,L=380		85374-BZB00-	1		
	+----------+							
	| 85373 | HOSE, WINDSHIELD WASHER (FROM JOINT TO NOZZLE)							
	+----------+							
1111 - 1507	F65#		*H,L=410,RH		85374-BZ250-	1		
1111 - 1507	F65#		*H,L=100,LH		85374-BZ270-	1		
1507 - 1607	F650		RH		85355-87701-	1		
1507 - 1607	F650		*H,L=180,LH		85374-BZ440-	1		
1507 - 1901	F653		RH		85355-87701-	1		
1507 - 1901	F653		*H,L=180,LH		85374-BZ440-	1		
1901 -	F65#		RH		85355-87701-	1		
1901 -	F65#		*H,L=180,LH		85374-BZ440-	1		

FIG.85-04 REAR WASHER

(1111-1507)LO : (1305-1507)STD

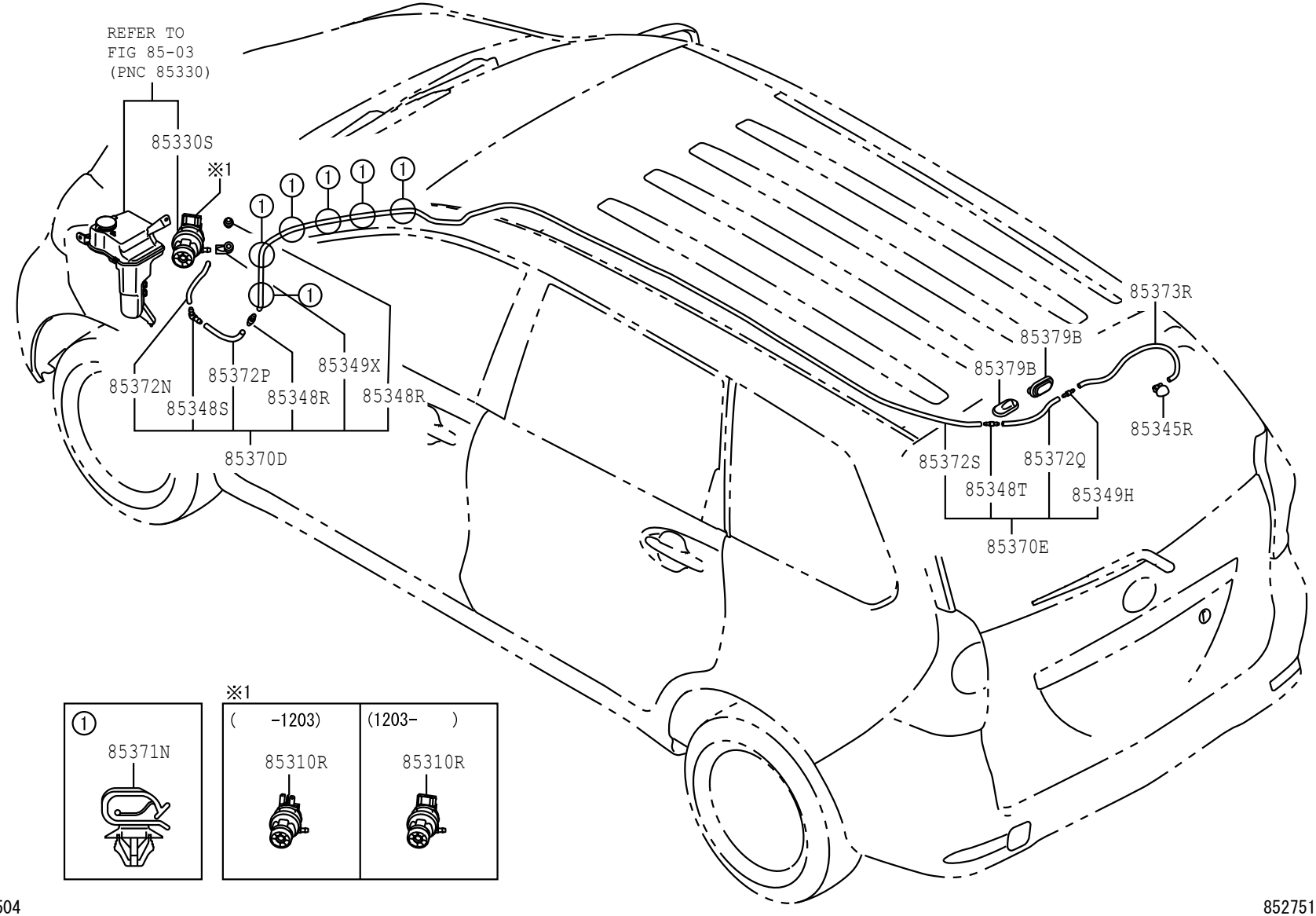

8504

852751-C

FIG.85-04 REAR WASHER

(1507-)

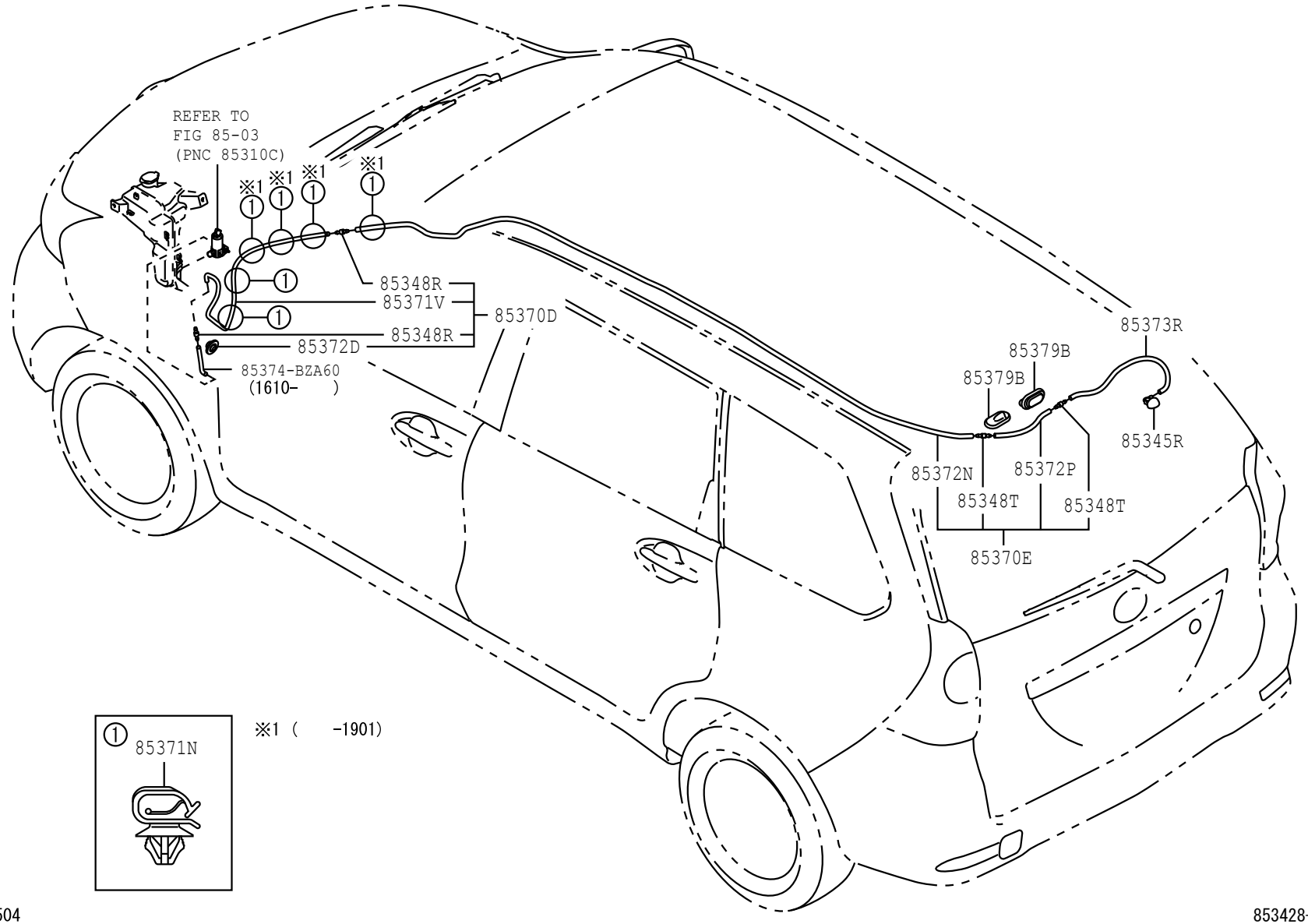

8504

853428-B

PROD_DATE	MODELS	SPEC CODE	DESCRIPTION	R/P	PART NUMBER	QYT	REV_REF FR	REV_REF TO
	+----------+							
	| 85310R | MOTOR ASSY, REAR WASHER							
	+----------+							
1111 - 1203	F65#..LO				85330-BZ030-	1		
1203 - 1507	F65#..LO				85330-BZ010-	1		
1305 - 1507	F65#..STD				85330-BZ010-	1		
	+----------+							
	| 85330S | BUSH, REAR WASHER JAR							
	+----------+							
1111 - 1507	F65#..LO				85373-97202-	1		
1305 - 1507	F65#..STD				85373-97202-	1		
	+----------+							
	| 85345R | NOZZLE, REAR WASHER							
	+----------+							
1111 - 1507	F65#..LO				85391-BZ070-	1		
1305 - 1507	F65#..STD				85391-BZ070-	1		
1507 - 1607	F650..LO				85391-BZ070-	1		
1507 - 1901	F653				85391-BZ070-	1		
1901 -	F65#				85391-BZ070-	1		
	+----------+							
	| 85348R | JOINT, REAR WASHER HOSE, NO.1							
	+----------+							
1111 - 1507	F65#..LO				85349-87201-	2		
1305 - 1507	F65#..STD				85349-87201-	2		
1507 - 1607	F650..LO				85317-BZ080-	2		
1507 - 1901	F653				85317-BZ080-	2		
1901 -	F65#				85317-BZ080-	2		
	+----------+							
	| 85348S | JOINT, REAR WASHER ELBOW, NO.1							
	+----------+							
1111 - 1507	F65#..LO				85349-87602-	1		
1305 - 1507	F65#..STD				85349-87602-	1		
	+----------+							
	| 85348T | JOINT, REAR WASHER HOSE, NO.2							
	+----------+							
1111 - 1507	F65#..LO				85349-87201-	1		

FIG.85-04 REAR WASHER

PROD_DATE	MODELS	SPEC CODE	DESCRIPTION	R/P	PART NUMBER	QYT	REV_REF FR	REV_REF TO
	+----------+							
	| 85348T | JOINT, REAR WASHER HOSE, NO.2							
	CONTINUED--+							
1305 - 1507	F65#..STD				85349-87201-	1		
1507 - 1607	F650..LO				85317-BZ080-	2		
1507 - 1901	F653				85317-BZ080-	2		
1901 -	F65#				85317-BZ080-	2		
	+----------+							
	| 85349H | JOINT, REAR WASHER HOSE, NO.3							
	+----------+							
1111 - 1507	F65#..LO				85349-87201-	1		
1305 - 1507	F65#..STD				85349-87201-	1		
	+----------+							
	| 85349X | JOINT, REAR WASHER ELBOW, NO.6							
	+----------+							
1111 - 1507	F65#..LO				85355-87503-	1		
1305 - 1507	F65#..STD				85355-87503-	1		
	+----------+							
	| 85370D | HOSE ASSY, REAR WASHER, NO.1							
	+----------+							
1111 - 1507	F65#..LO				85370-BZ530-	1		
1305 - 1507	F65#..STD				85370-BZ530-	1		
1507 - 1607	F650..LO				85370-BZA10-	1		
1507 - 1901	F653				85370-BZA10-	1		
1901 -	F65#				85370-BZA10-	1		
	+----------+							
	| 85370E | HOSE ASSY, REAR WASHER, NO.2							
	+----------+							
1111 - 1507	F650..LO				85370-BZ540-	1		
1111 - 1507	F651..LO				85370-BZ580-	1		
1305 - 1507	F650..STD				85370-BZ540-	1		
1305 - 1507	F651..STD				85370-BZ580-	1		
1507 - 1607	F650..LO				85370-BZA30-	1		
1507 - 1901	F653				85370-BZA30-	1		
1901 -	F65#				85370-BZA30-	1		

PROD_DATE	MODELS	SPEC CODE	DESCRIPTION	R/P	PART NUMBER	QYT	REV_REF FR	REV_REF TO
	+----------+							
	| 85371N | CLAMP, REAR WASHER HOSE							
	+----------+							
1111 - 1507	F65#..LO				82711-BZ100-	6		
1305 - 1507	F65#..STD				82711-BZ100-	6		
1507 - 1607	F650..LO				82711-BZ100-	6		
1507 - 1901	F653				82711-BZ100-	6		
1901 -	F65#				82711-BZ100-	2		
	+----------+							
	| 85371V | HOSE, REAR WASHER (FROM JOINT TO JOINT)							
	+----------+							
1507 - 1607	F650..LO		*H,L=1080		85374-BZ670-	1		
1507 - 1901	F653		*H,L=1080		85374-BZ670-	1		
1901 -	F65#		*H,L=1080		85374-BZ670-	1		
	+----------+							
	| 85372D | GROMMET, REAR WASHER HOSE							
	+----------+							
1507 - 1607	F650..LO				90044-80126-	1		
1507 - 1901	F653				90044-80126-	1		
1901 -	F65#				90044-80126-	1		
	+----------+							
	| 85372N | HOSE, REAR WASHER (FROM JOINT TO JOINT), NO.1							
	+----------+							
1111 - 1507	F65#..LO		*H,L=140		85374-BZ480-	1		
1305 - 1507	F65#..STD		*H,L=140		85374-BZ480-	1		
1507 - 1607	F650..LO		*H,L=2450		85374-BZA50-	1		
1507 - 1901	F653		*H,L=2450		85374-BZA50-	1		
1901 -	F65#		*H,L=2450		85374-BZA50-	1		
	+----------+							
	| 85372P | HOSE, REAR WASHER (FROM JOINT TO JOINT), NO.2							
	+----------+							
1111 - 1507	F65#..LO		*H,L=850		85374-BZ410-	1		
1305 - 1507	F65#..STD		*H,L=850		85374-BZ410-	1		
1507 - 1607	F650..LO		*H,L=280		85374-BZA30-	1		
1507 - 1901	F653		*H,L=280		85374-BZA30-	1		

FIG.85-04 REAR WASHER

PROD_DATE	MODELS	SPEC CODE	DESCRIPTION	R/P	PART NUMBER	QYT	REV_REF FR	REV_REF TO
	+----------+							
	| 85372P | HOSE, REAR WASHER (FROM JOINT TO JOINT), NO.2							
	CONTINUED--+							
1901 -	F65#		*H,L=280		85374-BZA30-	1		
	+----------+							
	| 85372Q | HOSE, REAR WASHER (FROM JOINT TO JOINT), NO.3							
	+----------+							
1111 - 1507	F65#..LO		*H,L=280		9004B-91002-	1		
1305 - 1507	F65#..STD		*H,L=280		9004B-91002-	1		
	+----------+							
	| 85372S | HOSE, REAR WASHER (FROM JOINT TO JOINT), NO.4							
	+----------+							
1111 - 1507	F650..LO		*H,L=2350		85374-BZ420-	1		
1111 - 1507	F651..LO		*H,L=2430		85374-BZ430-	1		
1305 - 1507	F650..STD		*H,L=2350		85374-BZ420-	1		
1305 - 1507	F651..STD		*H,L=2430		85374-BZ430-	1		
	+----------+							
	| 85373R | HOSE, REAR WASHER (FROM JOINT TO NOZZLE)							
	+----------+							
1111 - 1507	F65#..LO		*H,L=180		85374-BZ440-	1		
1305 - 1507	F65#..STD		*H,L=180		85374-BZ440-	1		
1507 - 1607	F650..LO		*H,L=180		85374-BZ440-	1		
1507 - 1901	F653		*H,L=180		85374-BZ440-	1		
1901 -	F65#		*H,L=180		85374-BZ440-	1		
	+----------+							
	| 85379B | GROMMET, WASHER, A							
	+----------+							
1111 - 1507	F65#..LO				85373-BZ010-	2		
				#	(90044-80370-)	1		
1305 - 1507	F65#..STD				85373-BZ010-	2		
				#	(90044-80370-)	1		
1507 - 1607	F650..LO				85373-BZ010-	2		
				#	(90044-80370-)	1		
1507 - 1901	F653				85373-BZ010-	2		
				#	(90044-80370-)	1		
1901 -	F65#				85373-BZ010-	2		
				#	(90044-80370-)	1		

(1111-1507)

RAIDO OPENING COVER

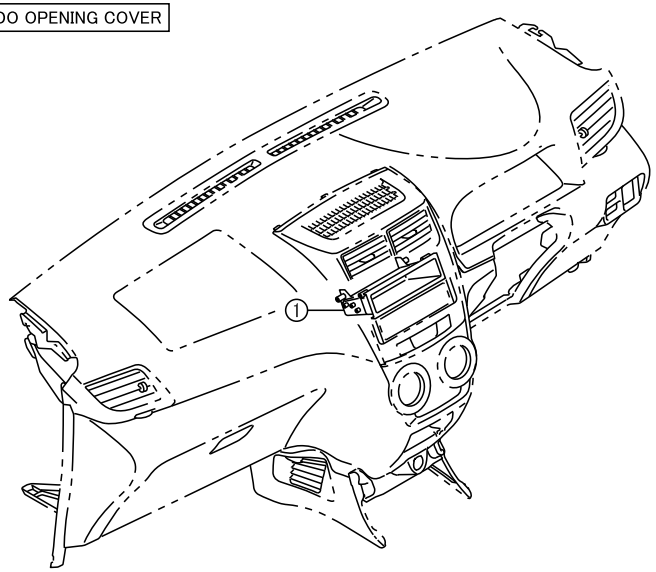

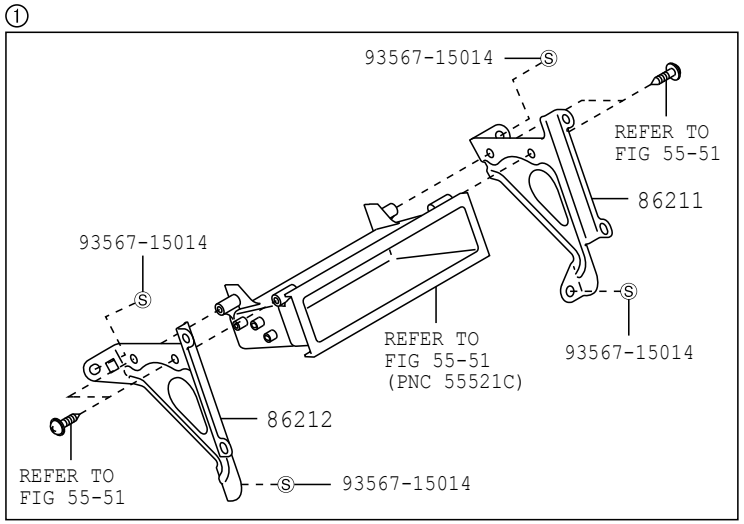

8601 864711

(1507-)

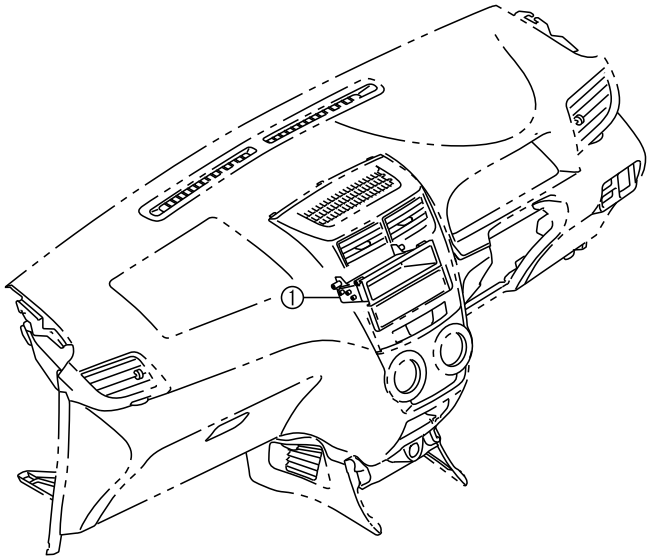

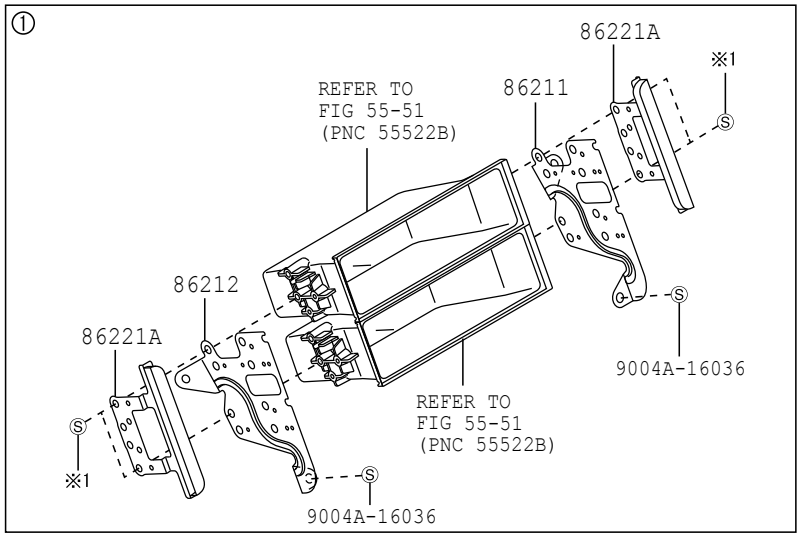

※1 93269-15008 (-1601)
9004A-14018 (1602-)

8601 866182-B

PROD_DATE	MODELS	SPEC CODE	DESCRIPTION	R/P	PART NUMBER	QYT	REV_REF FR	REV_REF TO
	+----------+							
	| 86211 |	BRACKET, RADIO, NO.1						
	+----------+							
1111 - 1507	F65#				86211-BZ150-	1		
1507 - 1901	F65#				86211-BZ151-	1		
1901 -	F65#				86211-BZ300-	1		
	+----------+							
	| 86212 |	BRACKET, RADIO, NO.2						
	+----------+							
1111 - 1507	F65#				86212-BZ150-	1		
1507 - 1901	F65#				86212-BZ151-	1		
1901 -	F65#				86212-BZ300-	1		
	+----------+							
	| 86221A |	PANEL, RADIO RECEIVER						
	+----------+							
1507 - 1901	F65#				86221-BZ020-	2		
1901 -	F65#				86221-BZ020-	2		

FIG.86-02 SPEAKER

(1901-)STD

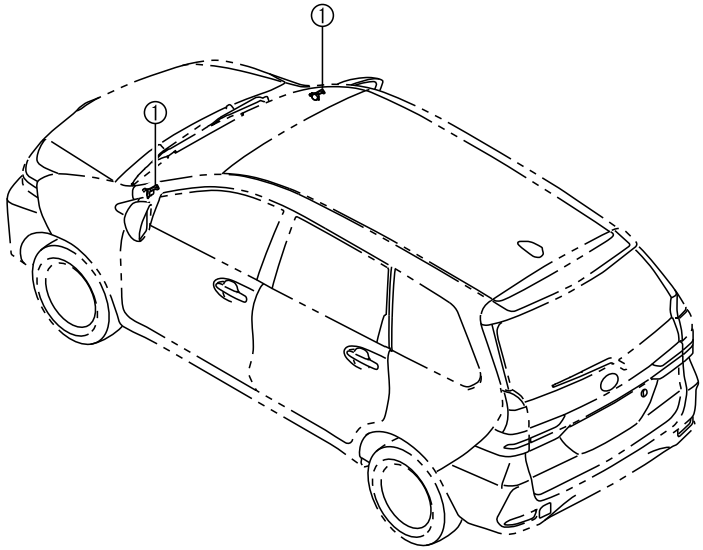

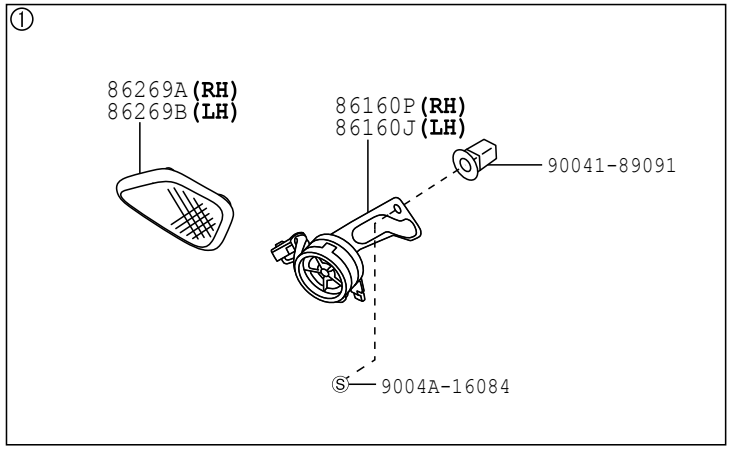

8602 867428

FIG.86-02 SPEAKER

PROD_DATE	MODELS	SPEC CODE	DESCRIPTION	R/P	PART NUMBER	QYT	REV_REF FR	REV_REF TO
	86160J SPEAKER ASSY, FRONT NO.3							
1901 -	F65#..STD				86150-BZ030-	1		
	86160P SPEAKER ASSY, FRONT NO.2							
1901 -	F65#..STD				86150-BZ020-	1		
	86269A GRILLE, SPEAKER							
1901 -	F65#..STD		LT.GRAY(TRIM4#)		86269-BZ040-B0	1		
	86269B GRILLE, SPEAKER							
1901 -	F65#..STD		LT.GRAY(TRIM4#)		86279-BZ030-B0	1		

FIG.86-04 ANTENNA

(1111-1901)

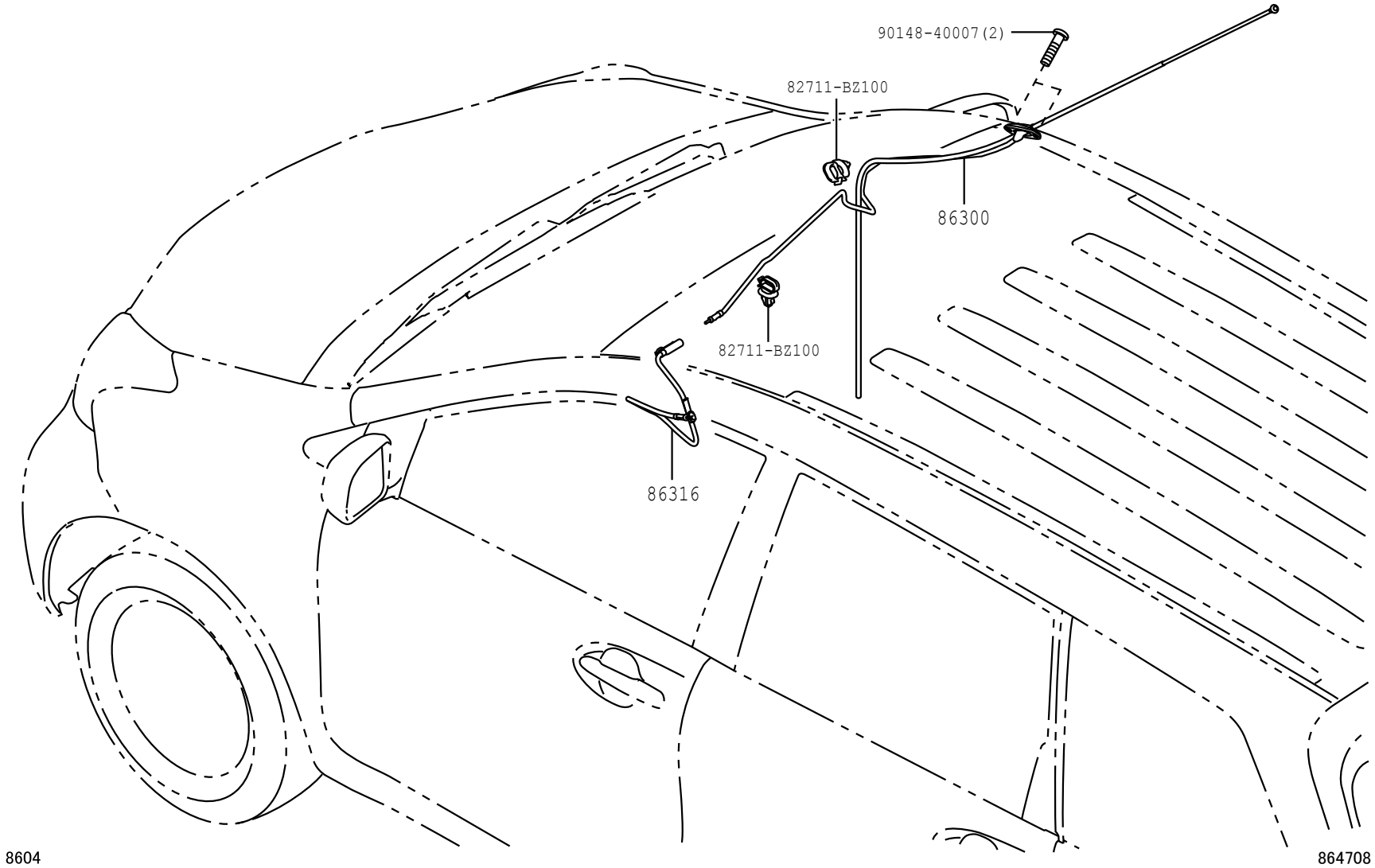

FIG.86-04 ANTENNA

(1901-)

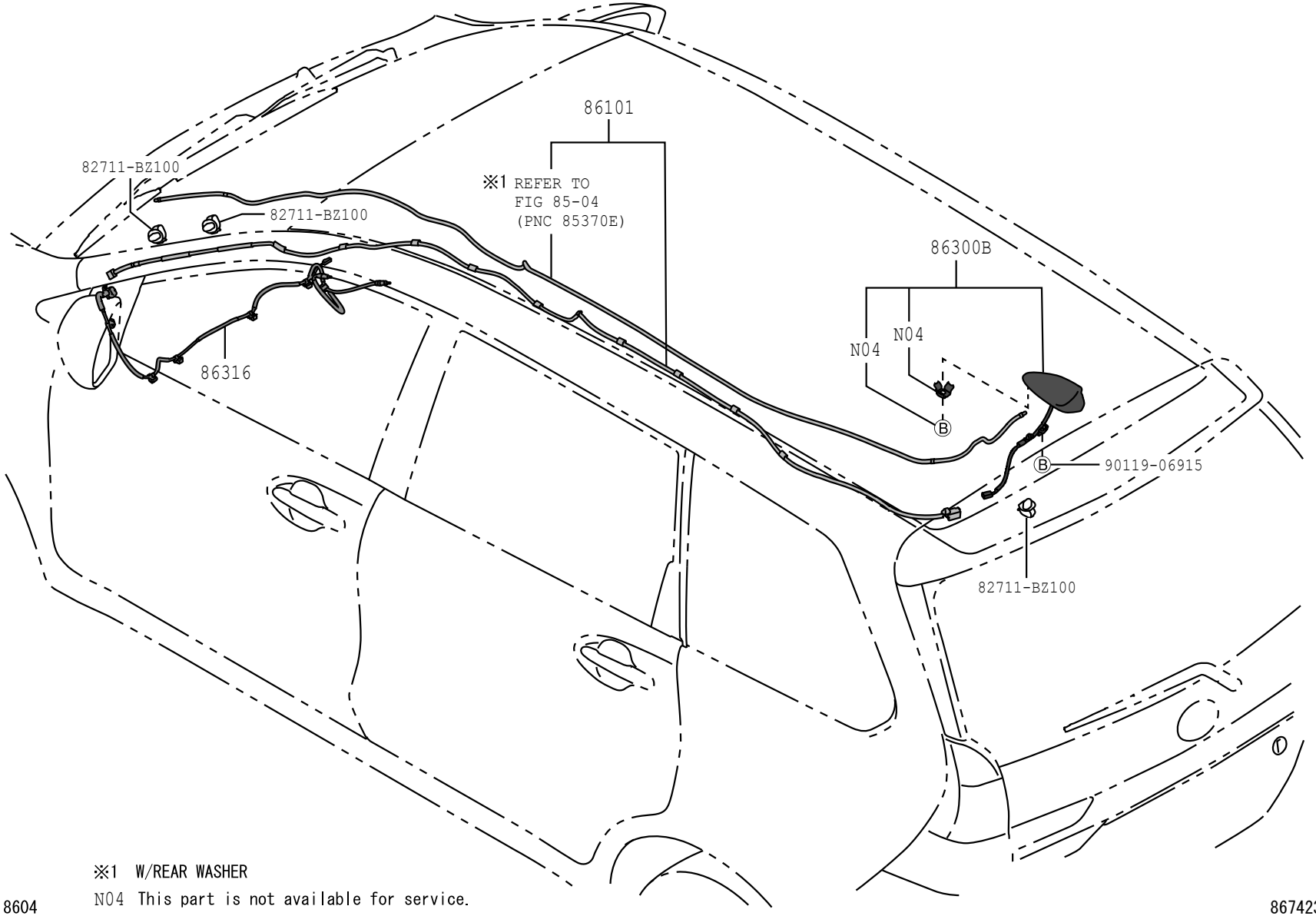

※1 W/REAR WASHER

N04 This part is not available for service.

8604

867423

FIG.86-04 ANTENNA

PROD_DATE	MODELS	SPEC CODE	DESCRIPTION	R/P	PART NUMBER	QYT	REV_REF FR	REV_REF TO
	+----------+							
	| 86101 | CORD SUB-ASSY, ANTENNA							
	+----------+							
1901 -	F65#				86316-BZ510-	1		
	+----------+							
	| 86300 | ANTENNA ASSY, W/HOLDER							
	+----------+							
1111 - 1507	F65#				86300-BZ210-	1		
1507 - 1607	F650				86300-BZ210-	1		
1507 - 1901	F653				86300-BZ210-	1		
	+----------+							
	| 86300B | ANTENNA ASSY, AMPLIFIER, NO.1							
	+----------+							
1901 -	F65#		WHITE(W09)		86300-BZ390-A0	1		
1901 -	F65#		WHITE PEARL MC.CS(W24)		86300-BZ390-A1	1		
1901 -	F65#		SILVER M.M.(1E7)		86300-BZ390-B0	1		
1901 -	F65#		GRAY ME.(1G3)		86300-BZ390-B1	1		
1901 -	F65#		BLACK ME.(X12)		86300-BZ390-C0	1		
1901 -	F65#		DK. RED M.M.(3Q3)		86300-BZ390-D0	1		
1901 -	F65#		BRONZE M.M.(4T3)		86300-BZ390-E1	1		
1901 -	F65#		DARK BLUE SE.(B79)		86300-BZ390-J0	1		
	+----------+							
	| 86316 | CABLE, ANTENNA							
	+----------+							
1111 - 1507	F65#				86316-BZ190-	1		
1507 - 1607	F650				86316-BZ190-	1		
1507 - 1901	F653				86316-BZ190-	1		
1901 -	F65#				86316-BZ540-	1		

FIG.86-11 HORN

(1111-)

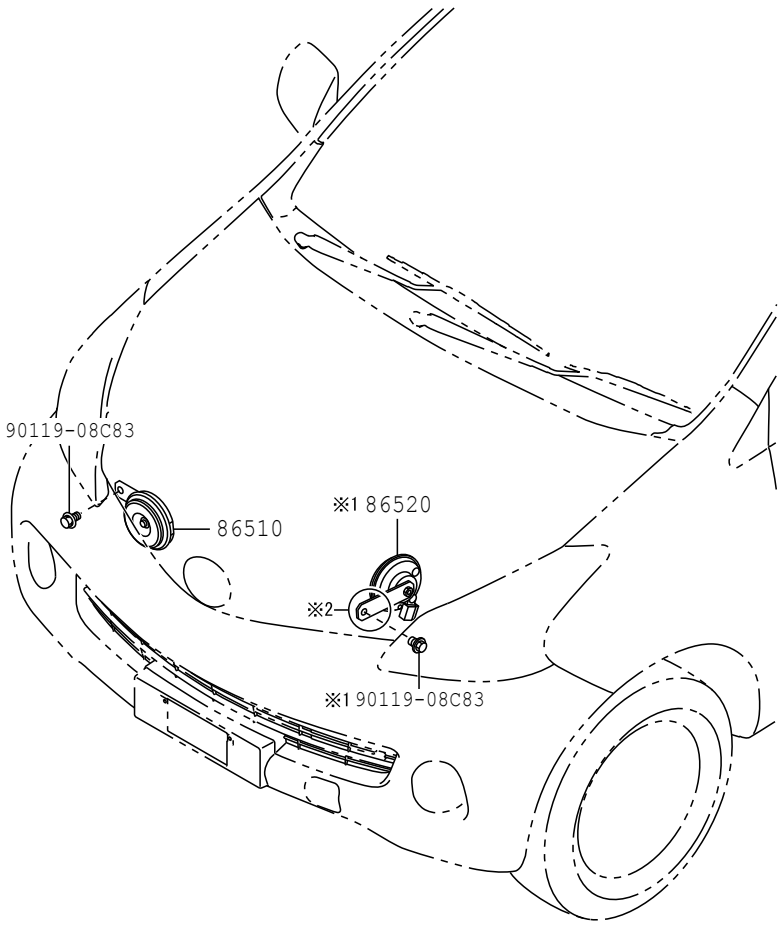

※1 W/DOUBLE HORN

※2

(-1802)	(1802-)
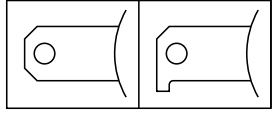	

8611

864709-A

FIG.86-11 HORN

PROD_DATE	MODELS	SPEC CODE	DESCRIPTION	R/P	PART NUMBER	QYT	REV_REF FR	REV_REF TO
	+----------+							
	| 86510 | HORN ASSY, HIGH PITCHED							
	+----------+							
1111 - 1507	F65#				86510-BZ130-	1		
1507 - 1607	F650				86510-BZ160-	1		
1507 - 1901	F653				86510-BZ160-	1		
1901 -	F65#				86510-BZ160-	1		
	+----------+							
	| 86520 | HORN ASSY, LOW PITCHED							
	+----------+							
1111 - 1507	F651..LO				86520-BZ090-	1		
1507 - 1607	F650..LO				86520-BZ130-	1		
1507 - 1802	F653				86520-BZ130-	1		
1802 - 1901	F653				86520-BZ220-	1		
1901 -	F65#				86520-BZ220-	1		

FIG. 87-01 MIRROR

(1111-1507)

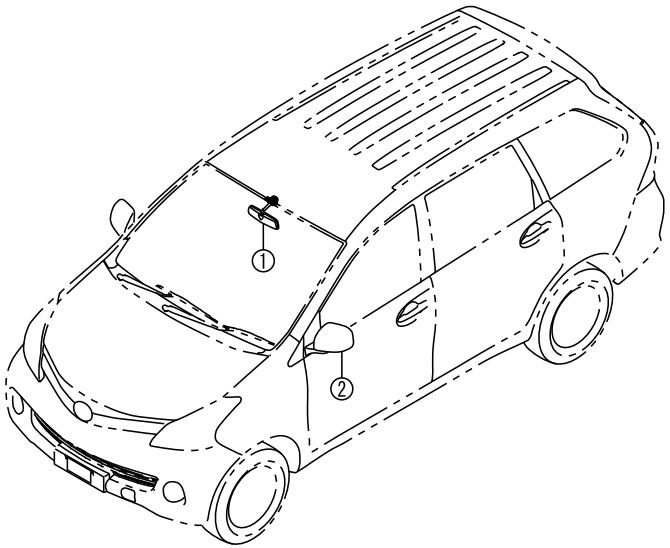

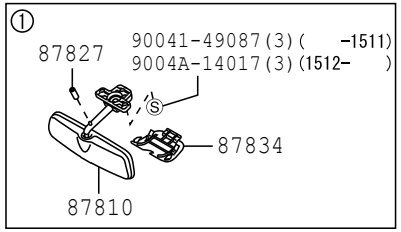

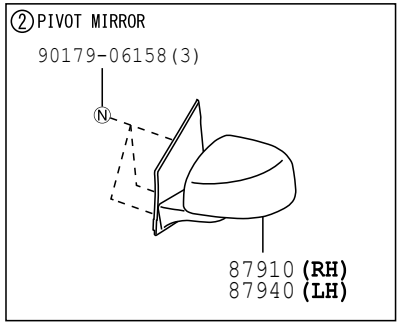

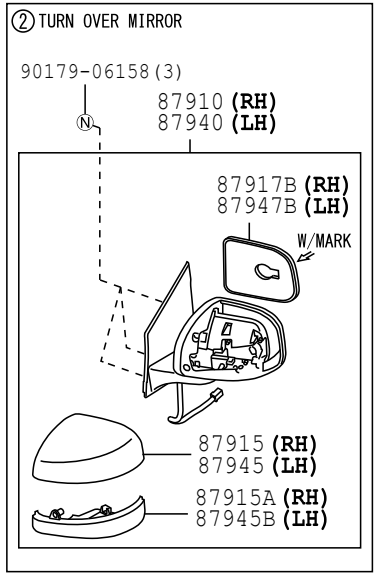

8701

87F329

FIG. 87-01 MIRROR

(1507-1901)

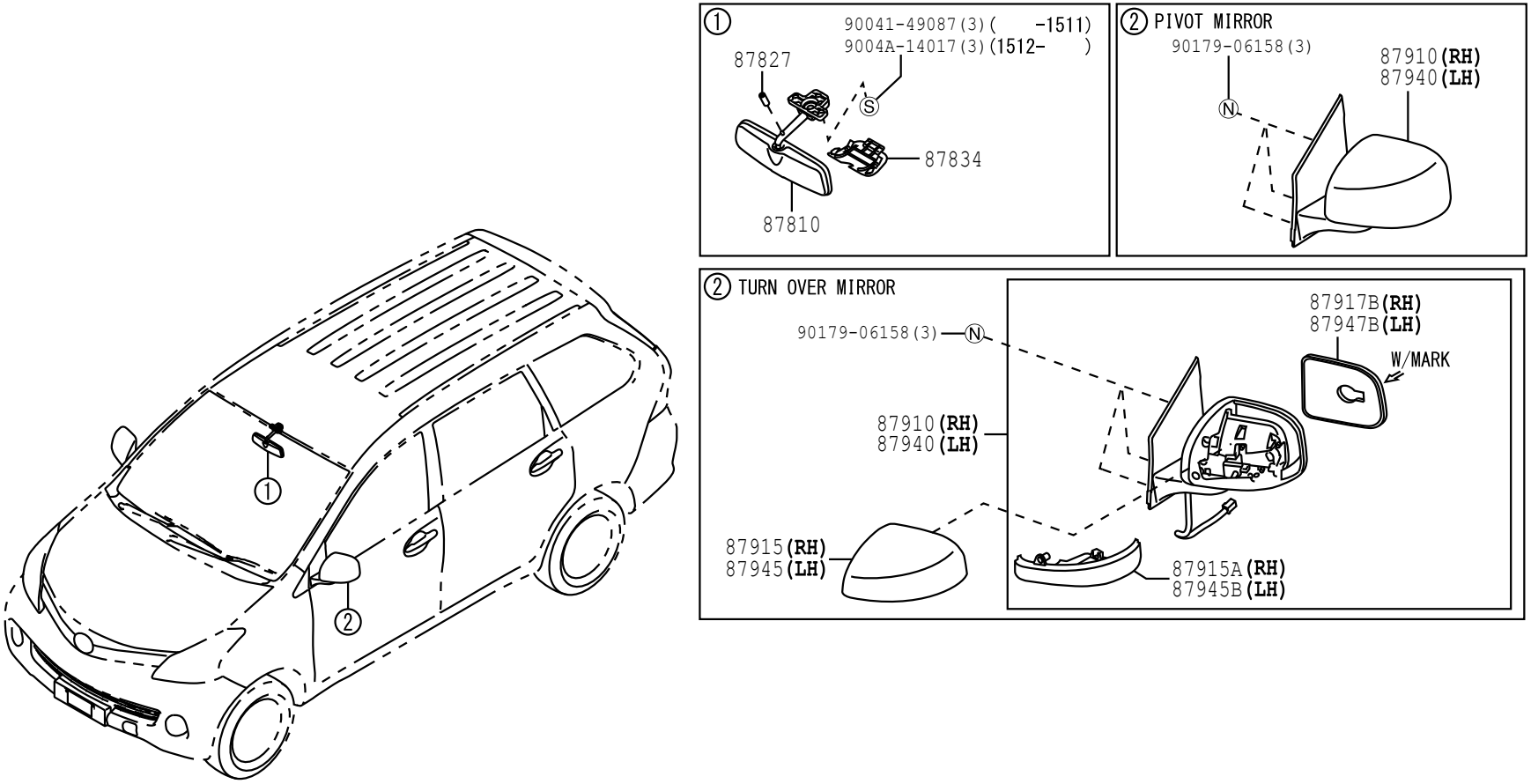

8701

87G313

FIG.87-01 MIRROR

(1901-)

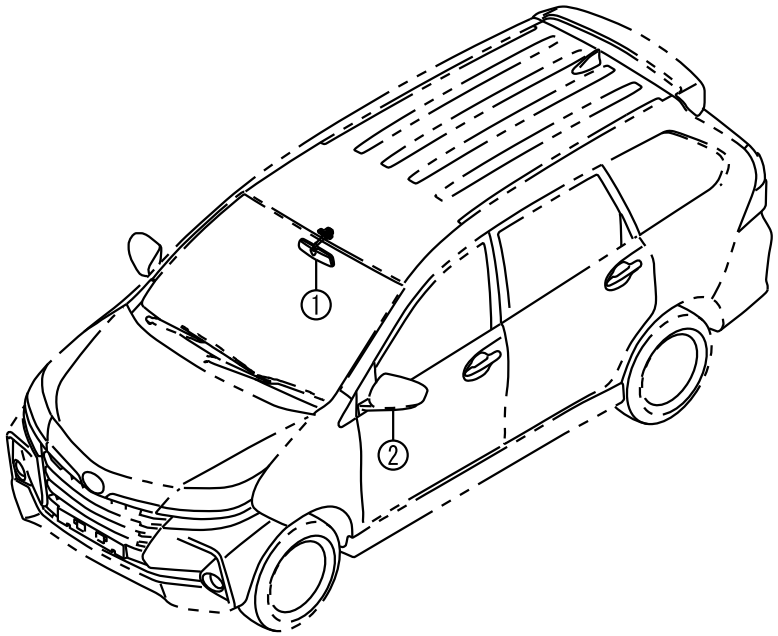

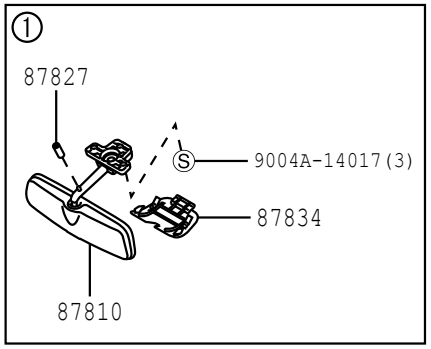

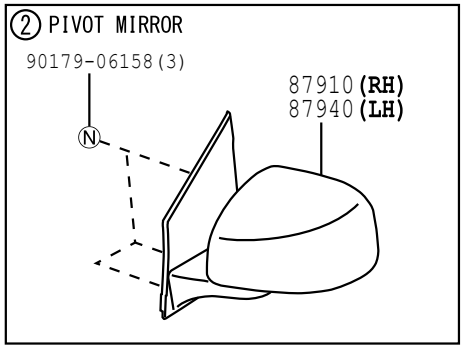

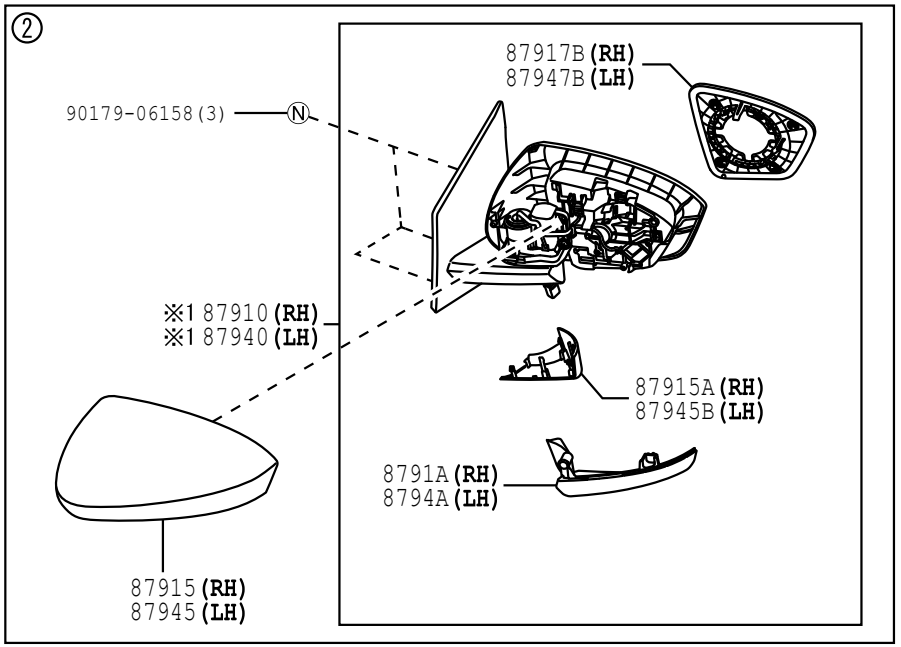

※1

	TYPE A	TYPE B
ELECTRIC FOLD		○

8701

87H493-A

PROD_DATE	MODELS	SPEC CODE	DESCRIPTION	R/P	PART NUMBER	QYT	REV_REF FR	REV_REF TO
	+----------+							
	| 87810 | MIRROR ASSY, INNER REAR VIEW							
	+----------+							
1111 - 1507	F65#				87810-BZ070-	1		
1507 - 1901	F65#				87810-BZ070-	1		
1901 -	F65#				87810-BZ070-	1		
	+----------+							
	| 87827 | ABSORBER, INNER REAR VIEW MIRROR							
	+----------+							
1111 - 1507	F65#				87828-BZ010-	1		
1507 - 1901	F65#				87828-BZ010-	1		
1901 -	F65#				87828-BZ010-	1		
	+----------+							
	| 87834 | COVER, INNER REAR VIEW MIRROR STAY HOLDER							
	+----------+							
1111 - 1507	F650..STD		LT.GRAY(TRIM1#)		87834-BZ051-B1	1		
1111 - 1507	F651		LT.GRAY(TRIM4#)		87834-BZ051-B1	1		
1111 - 1507	F650..LO		LT.GRAY(TRIM4#)		87834-BZ051-B1	1		
1507 - 1607	F650..STD		LT.GRAY(TRIM1#)		87834-BZ051-B1	1		
1507 - 1901	F653		LT.GRAY(TRIM4#)		87834-BZ051-B1	1		
1507 - 1901	F650..LO		LT.GRAY(TRIM4#)		87834-BZ051-B1	1		
1901 -	F65#		LT.GRAY(TRIM4#)		87834-BZ051-B1	1		
	+----------+							
	| 87910 | MIRROR ASSY, OUTER REAR VIEW, RH							
	+----------+							
1111 - 1411	F65#..LO		MARK:TAPE=BLUE		87910-BZ600-	1		
1111 - 1507	F65#..STD		PIVOT MIRROR		87910-BZ430-	1		
1412 - 1507	F65#..LO				87910-BZ601-	1		
1507 - 1607	F650..STD		PIVOT MIRROR		87910-BZ430-	1		
1507 - 1607	F650..LO		PIVOT MIRROR		87910-BZ590-	1		
1507 - 1901	F653				87910-BZ471-	1		
1610 - 1901	F653..LO..5F	B2AE	INDONESIA TAXI,PIVOT MIRROR		87910-BZ430-	1		

FIG.87-01 MIRROR

PROD_DATE	MODELS	SPEC CODE	DESCRIPTION	R/P	PART NUMBER	QYT	REV_REF FR	REV_REF TO
	+----------+							
	| 87910 | MIRROR ASSY, OUTER REAR VIEW, RH							
	CONTINUED--+							
1901 -	F653..LO..5F	B2AE	INDONESIA TAXI,PIVOT MIRROR		87910-BZ430-	1		
1901 -	F653..LO		TYPE A		87910-BZB20-	1		
1901 -	F65#..STD		TYPE B		87910-BZB30-	1		
	+----------+							
	| 87915 | COVER, OUTER MIRROR, RH							
	+----------+							
1111 - 1507	F65#..LO				87915-BZ310-	1		
1507 - 1901	F653				87915-BZ310-	1		
1901 -	F65#				87915-BZ520-	1		
	+----------+							
	| 87915A | COVER, OUTER MIRROR, RH							
	+----------+							
1111 - 1507	F65#..LO				87915-BZ290-	1		
1507 - 1901	F653				87915-BZ290-	1		
1901 -	F65#				8791B-BZ020-	1		
	+----------+							
	| 87917B | MIRROR, OUTER REAR VIEW, RH							
	+----------+							
1111 - 1412	F65#..LO		MARK:TAPE=BLUE		87917-BZ110-	1		
1412 - 1507	F65#..LO				87917-BZ110-	1		
1507 - 1901	F653				87917-BZ120-	1		
1901 -	F65#				87917-BZ180-	1		
	+----------+							
	| 8791A | COVER, OUTER MIRROR, RH NO.2							
	+----------+							
1901 -	F65#				8791A-BZ020-	1		
	+----------+							
	| 87940 | MIRROR ASSY, OUTER REAR VIEW, LH							
	+----------+							
1111 - 1411	F65#..LO		MARK:TAPE=BLUE		87940-BZ600-	1		
1111 - 1507	F65#..STD		PIVOT MIRROR		87940-BZ360-	1		
1412 - 1507	F65#..LO				87940-BZ601-	1		
1507 - 1607	F650..STD		PIVOT MIRROR		87940-BZ360-	1		

PROD_DATE	MODELS	SPEC CODE	DESCRIPTION	R/P	PART NUMBER	QYT	REV_REF FR	REV_REF TO
	+----------+							
	| 87940 | MIRROR ASSY, OUTER REAR VIEW, LH							
	CONTINUED--+							
1507 - 1607	F650..LO		PIVOT MIRROR		87940-BZ590-	1		
1507 - 1901	F653				87940-BZ411-	1		
1610 - 1901	F653..LO..5F	B2AE	INDONESIA TAXI,PIVOT MIRROR		87940-BZ360-	1		
1901 -	F653..LO..5F	B2AE	INDONESIA TAXI,PIVOT MIRROR		87940-BZ360-	1		
1901 -	F653..LO		TYPE A		87940-BZD50-	1		
1901 -	F65#..STD		TYPE B		87940-BZD60-	1		
	+----------+							
	| 87945 | COVER, OUTER MIRROR, LH							
	+----------+							
1111 - 1507	F65#..LO				87945-BZ310-	1		
1507 - 1901	F653				87945-BZ310-	1		
1901 -	F65#				87945-BZ530-	1		
	+----------+							
	| 87945B | COVER, OUTER MIRROR, LH							
	+----------+							
1111 - 1507	F65#..LO				87945-BZ290-	1		
1507 - 1901	F653				87945-BZ290-	1		
1901 -	F65#				8794B-BZ020-	1		
	+----------+							
	| 87947B | MIRROR, OUTER REAR VIEW, LH							
	+----------+							
1111 - 1412	F65#..LO		MARK:TAPE=BLUE		87947-BZ110-	1		
1412 - 1507	F65#..LO				87947-BZ110-	1		
1507 - 1901	F653				87947-BZ120-	1		
1901 -	F65#				87947-BZ180-	1		
	+----------+							
	| 8794A | COVER, OUTER MIRROR, LH NO.2							
	+----------+							
1901 -	F65#				8794A-BZ020-	1		

FIG.87-14 HEATING & AIR CONDITIONING - COOLER UNIT

(1111-1306)

ILLUST NO. 1 OF 3

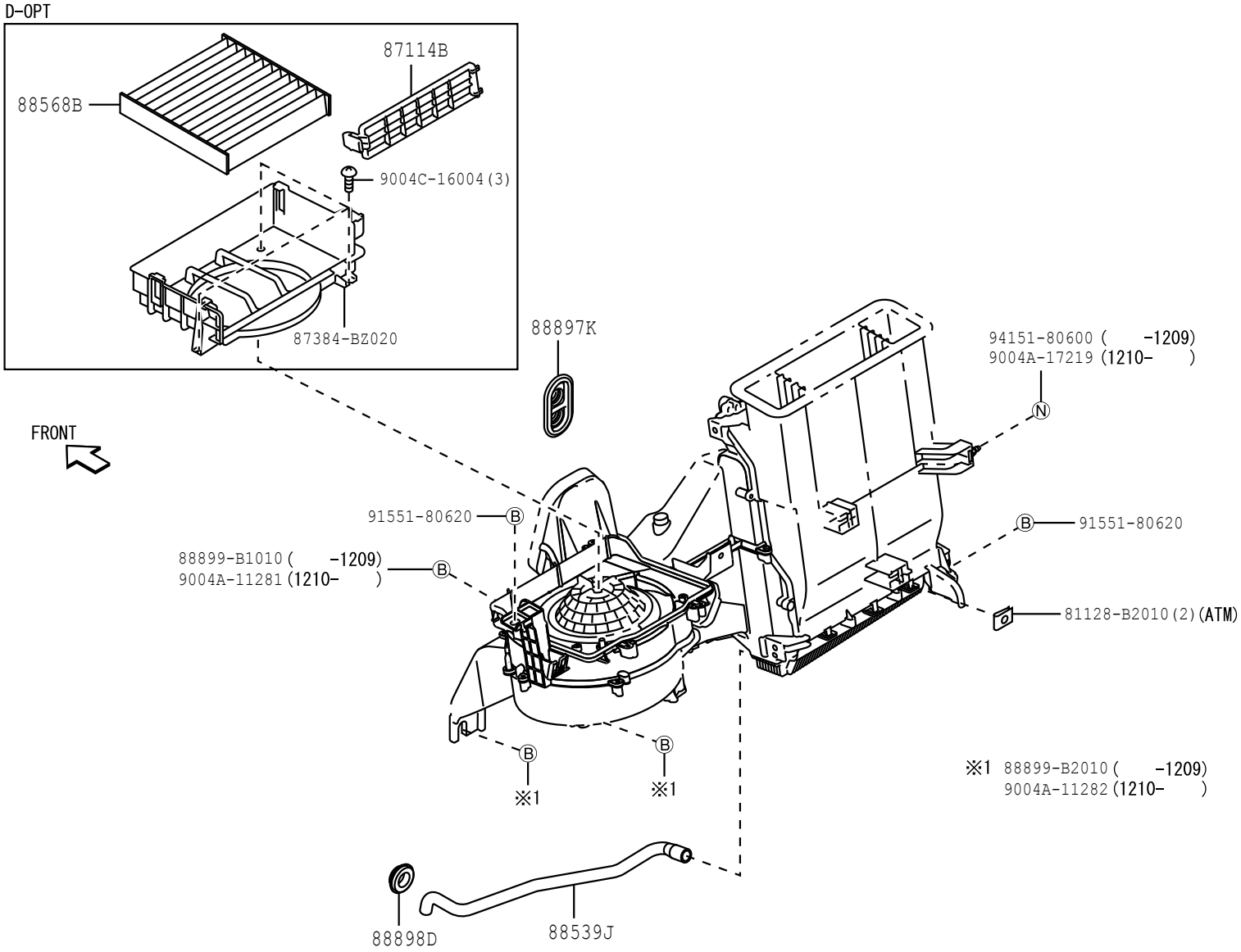

8714

87C545-C

FIG.87-14 HEATING & AIR CONDITIONING - COOLER UNIT

(1111-1306)

ILLUST NO. 2 OF 3

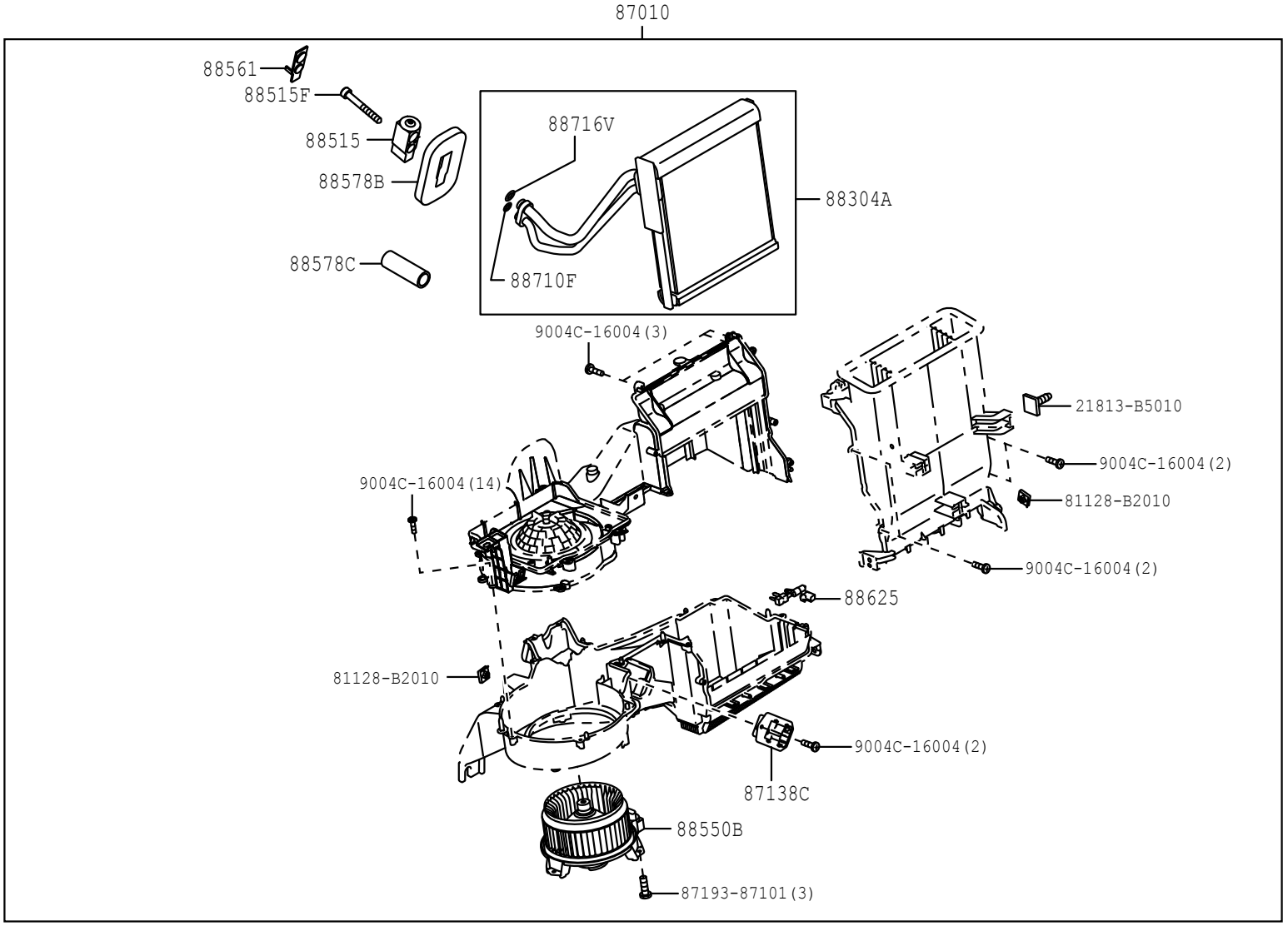

8714

87C549-D

FIG.87-14 HEATING & AIR CONDITIONING - COOLER UNIT

(1111-1507)F651 ; (1507-1607)F650..LO ; (1507-)F653,654

ILLUST NO. 3 OF 3

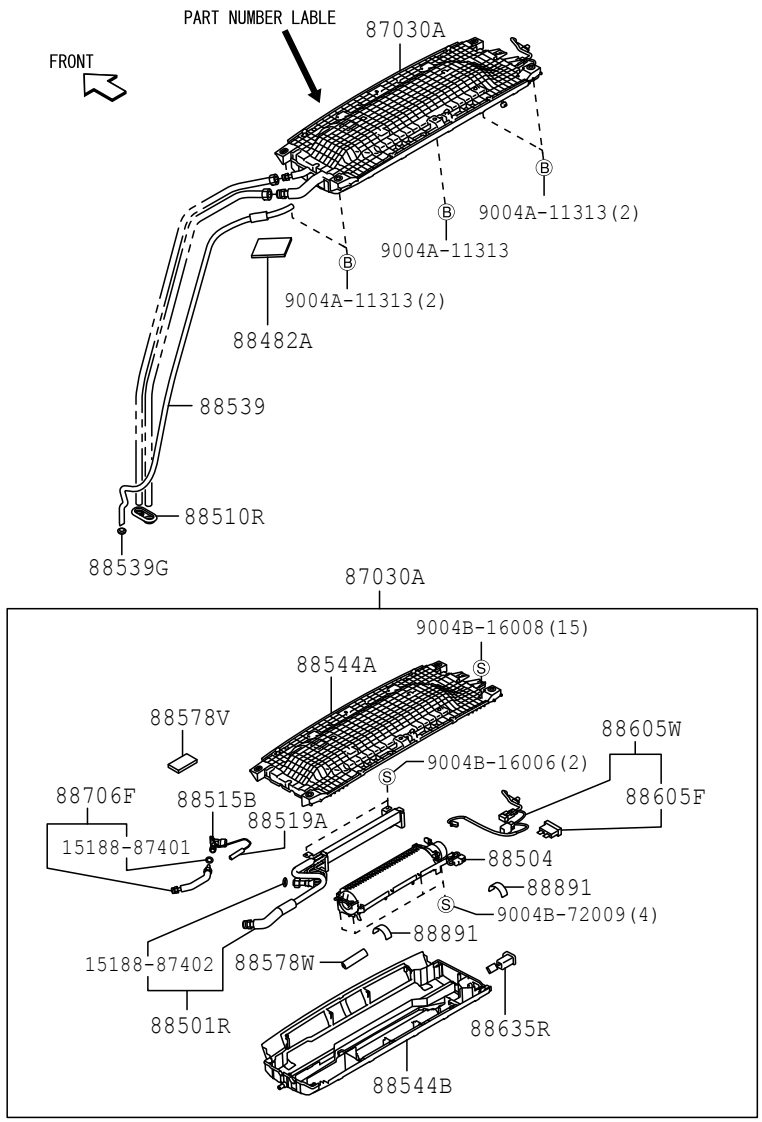

8714

87C552-K

FIG.87-14 HEATING & AIR CONDITIONING - COOLER UNIT

(1306-1507)

ILLUST NO. 1 OF 3

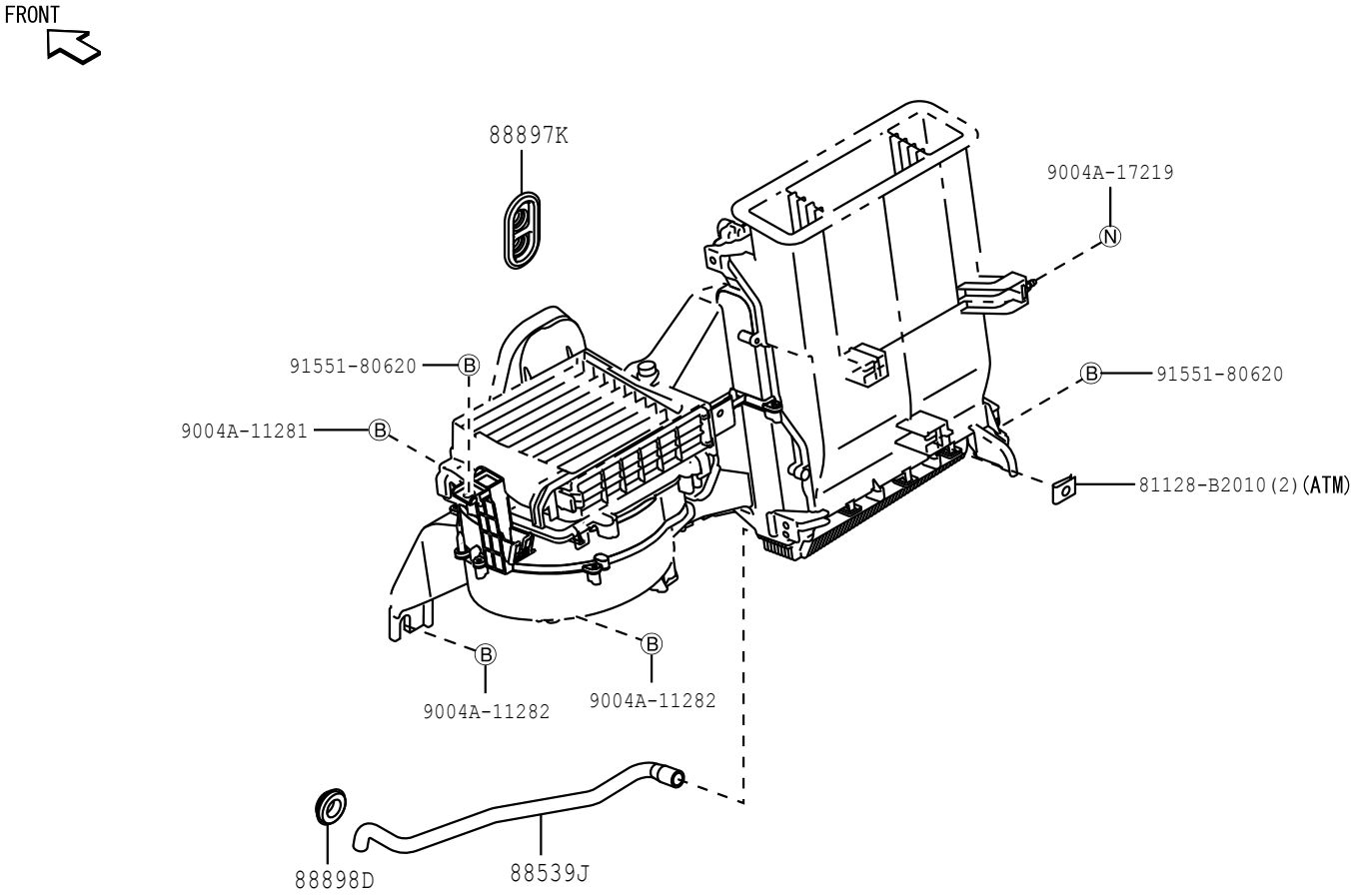

8714

87D911-A

FIG.87-14 HEATING & AIR CONDITIONING - COOLER UNIT

(1306-1507)

ILLUST NO. 2 OF 3

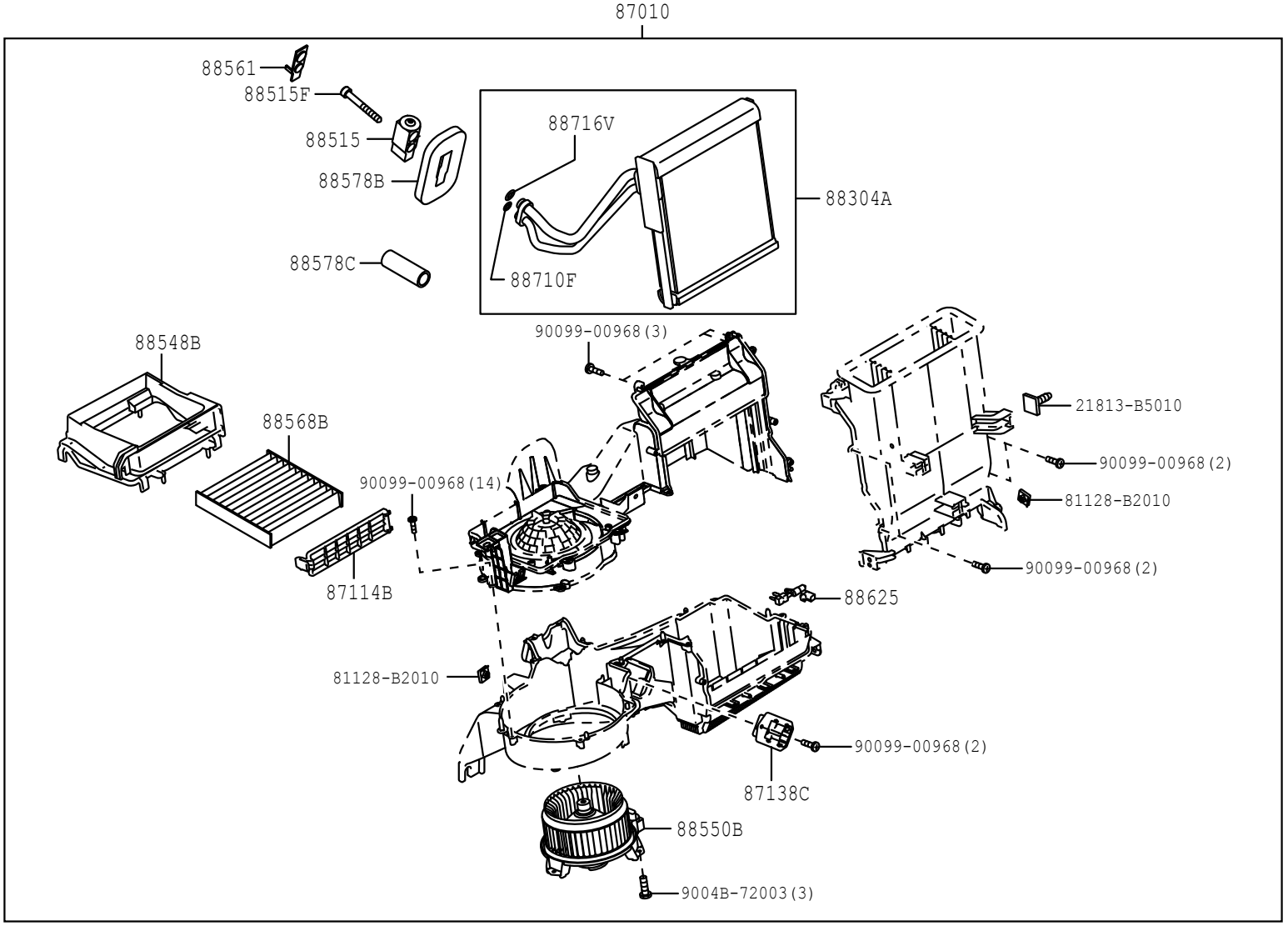

8714

87D912-B

FIG.87-14 HEATING & AIR CONDITIONING - COOLER UNIT

(1507-1901)F653..LO ; (1507-1901)F650

ILLUST NO. 1 OF 3

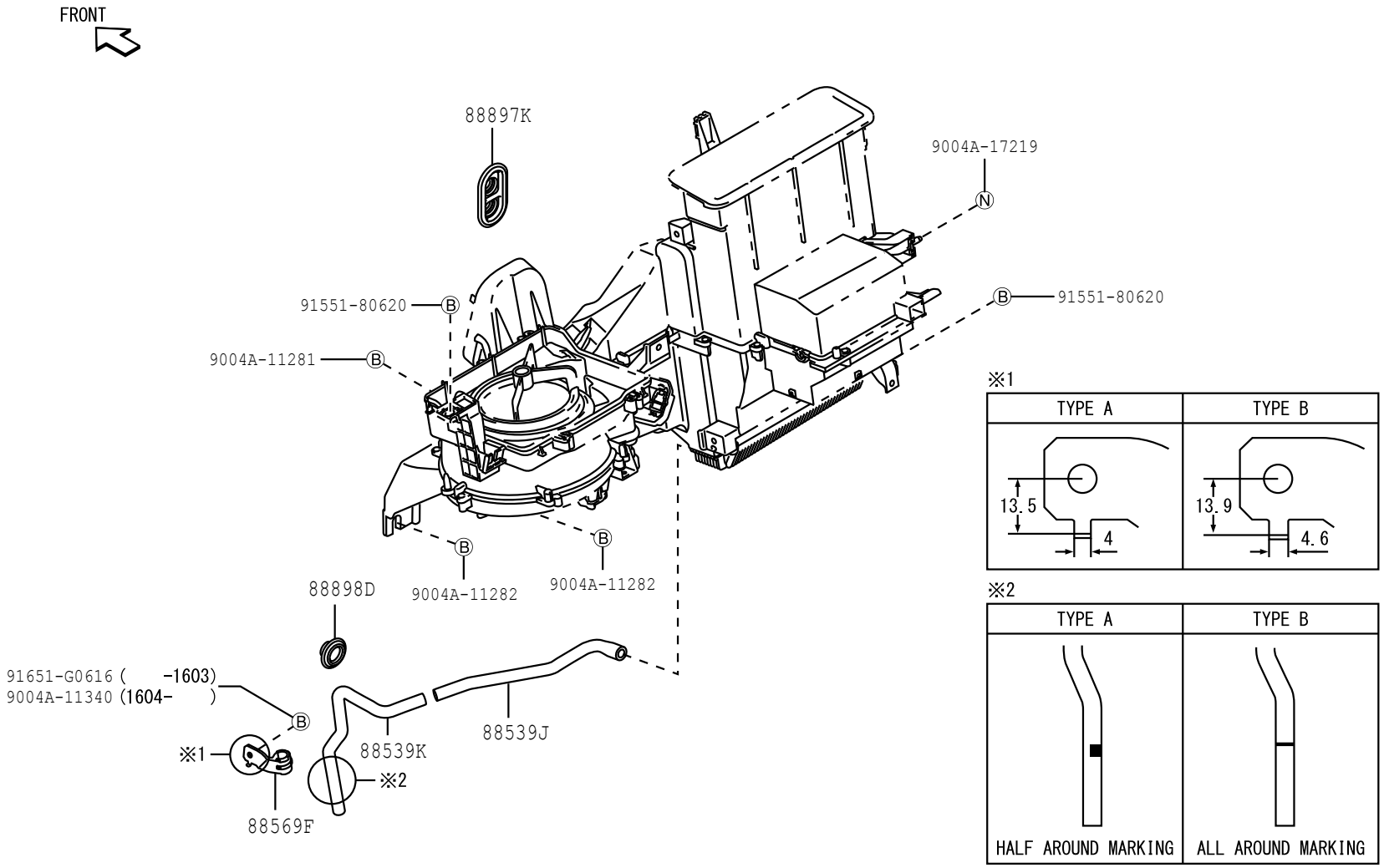

8714

87F150-D

FIG.87-14 HEATING & AIR CONDITIONING - COOLER UNIT

(1507-1901)F653..STD ; (1901-)

ILLUST NO. 1 OF 3

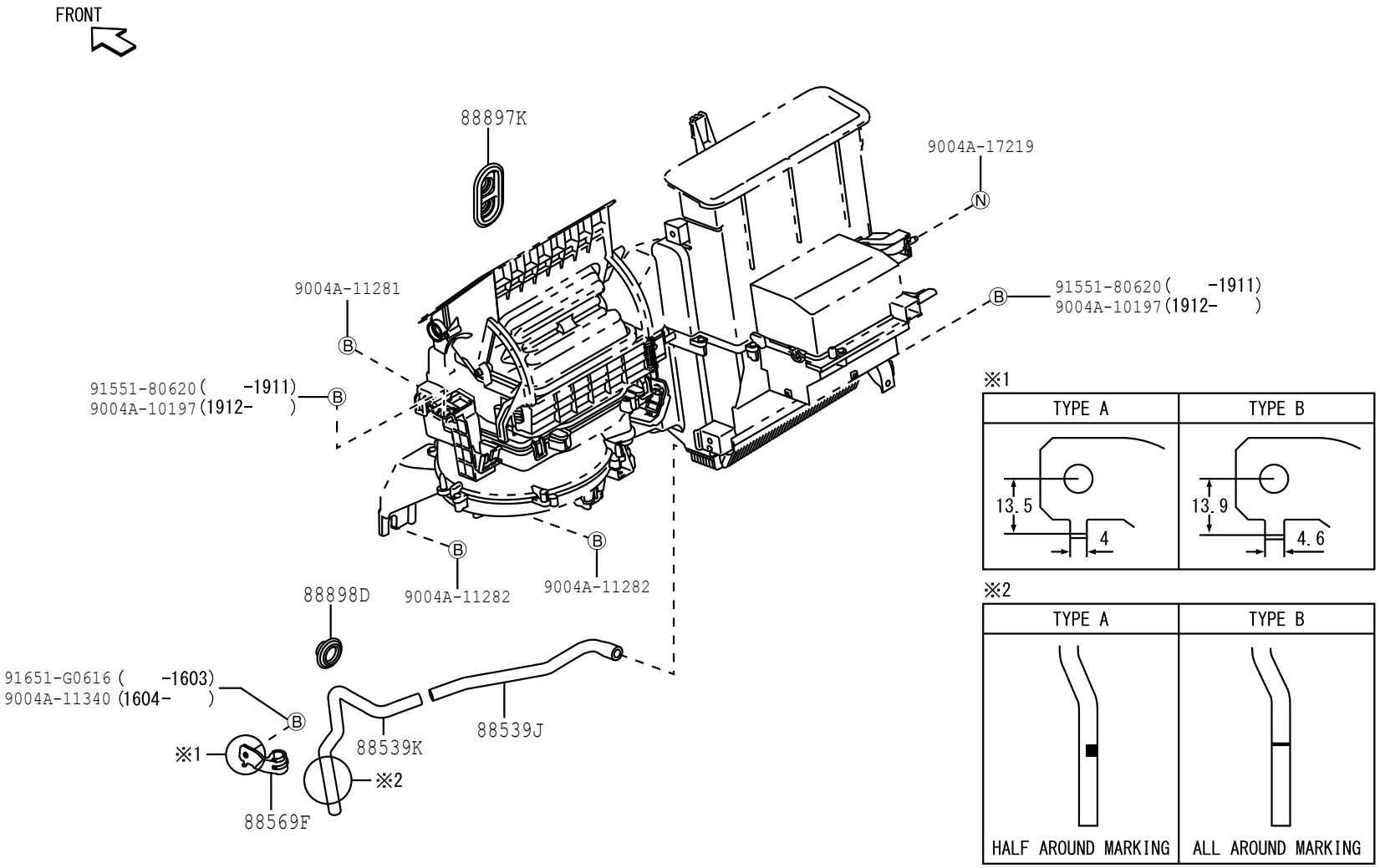

8714

87F152-H

FIG.87-14 HEATING & AIR CONDITIONING - COOLER UNIT

(1507-1901)F653..LO ; (1507-1901)F650

ILLUST NO. 2 OF 3

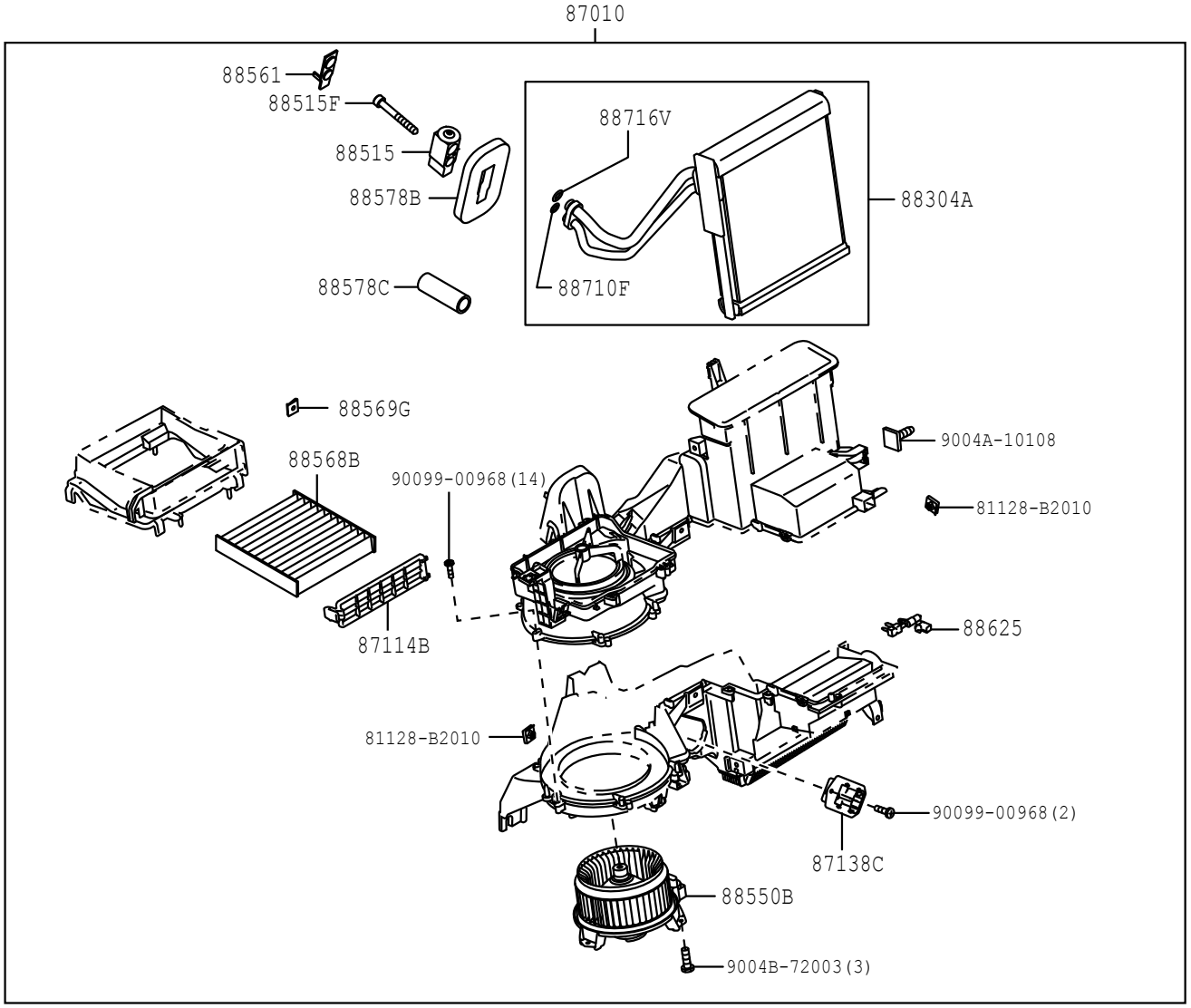

8714

87F153

FIG.87-14 HEATING & AIR CONDITIONING - COOLER UNIT

(1507-1901)F653..STD

ILLUST NO. 2 OF 3

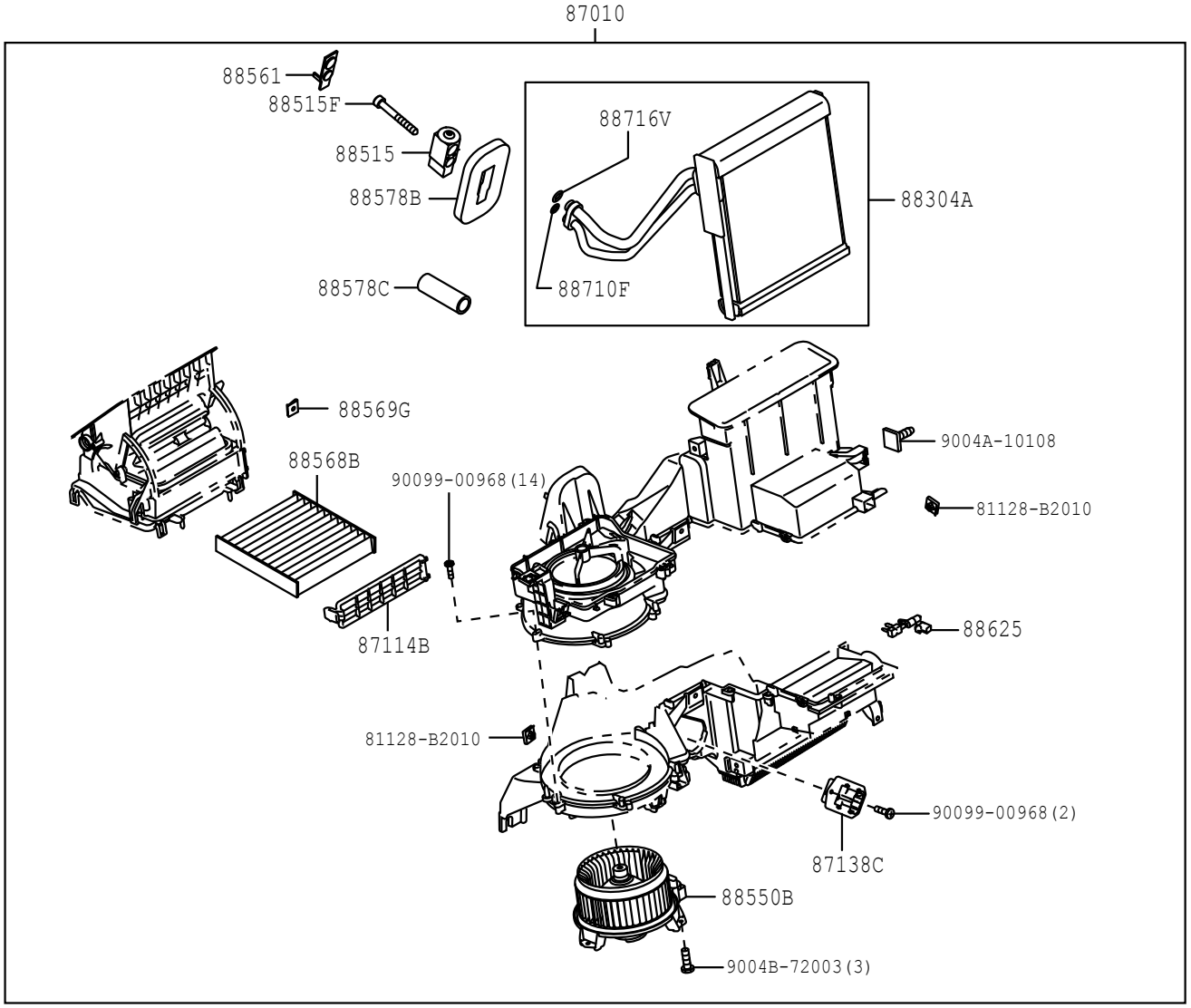

8714

87F154

FIG.87-14 HEATING & AIR CONDITIONING - COOLER UNIT

(1901-)

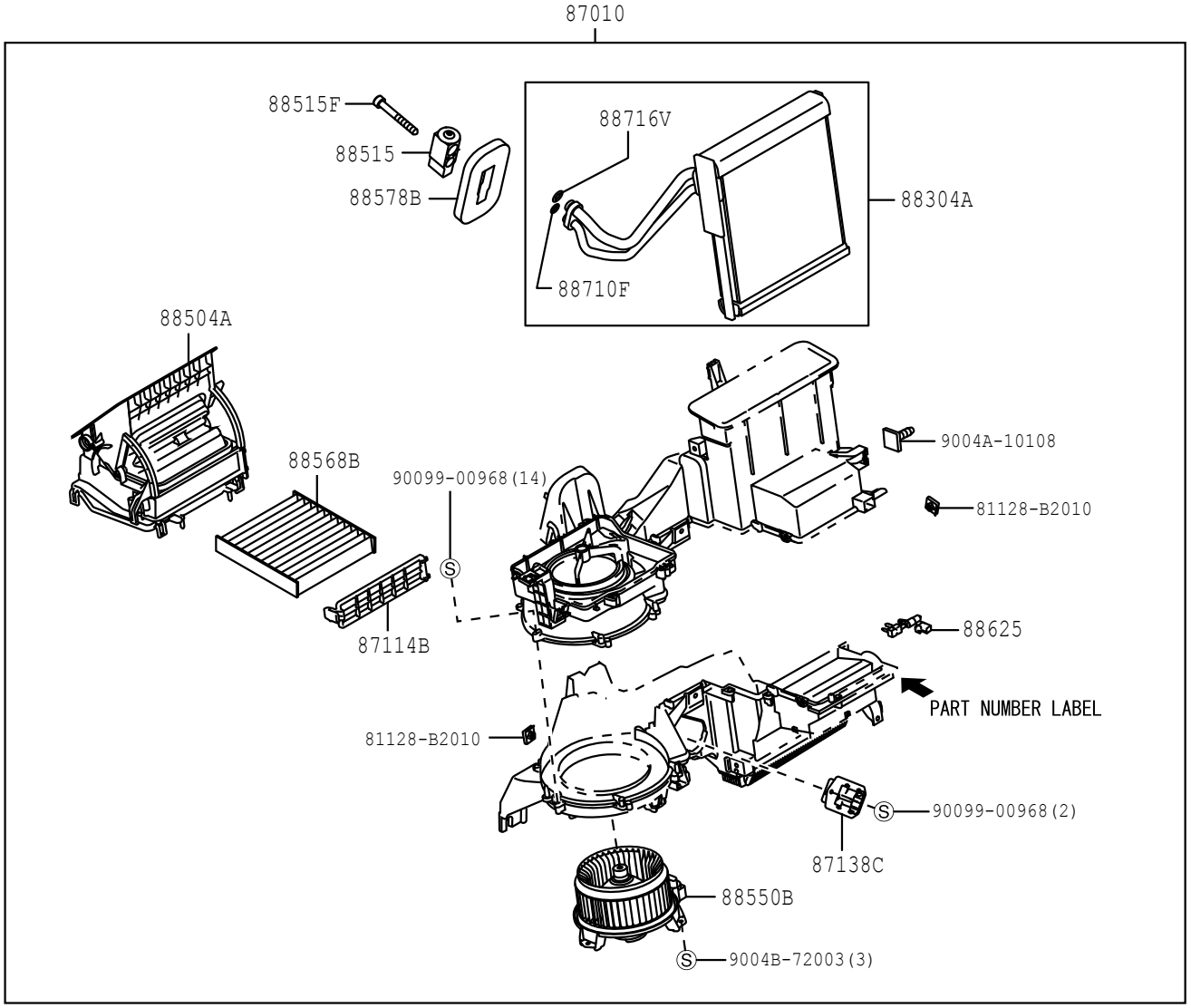

8714

87H531-A

PROD_DATE	MODELS	SPEC CODE	DESCRIPTION	R/P	PART NUMBER	QYT	REV_REF FR	REV_REF TO
	+----------+							
	| 87010 | UNIT ASSY, AIR CONDITIONER							
	+----------+							
1111 - 1306	F65#				88510-BZ170-	1		
1306 - 1507	F65#				88510-BZ171-	1		
1507 - 1704	F650				88510-BZ250-	1		
1507 - 1704	F653..LO				88510-BZ250-	1		
1507 - 1704	F653..STD				88510-BZ260-	1		
1705 - 1805	F653..LO				88510-BZ251-	1		
1705 - 1805	F653..STD				88510-BZ261-	1		
1806 - 1901	F653..LO		W/PART NUMBER LABEL		88510-BZ252-	1		
1806 - 1901	F653..STD		W/PART NUMBER LABEL		88510-BZ262-	1		
1901 - 1902	F65#		W/PART NUMBER LABEL		88510-BZ291-	1		
1902 -	F65#		W/PART NUMBER LABEL		88510-BZ292-	1		
	+----------+							
	| 87030A | UNIT ASSY, COOLING, REAR							
	+----------+							
1111 - 1206	F651		W/PART NUMBER LABEL		87030-BZ160-	1		
1206 - 1307	F651		W/PART NUMBER LABEL		87030-BZ161-	1		
1308 - 1412	F651		W/PART NUMBER LABEL		87030-BZ162-	1		
1412 - 1507	F651		W/PART NUMBER LABEL		87030-BZ163-	1		
1507 - 1607	F650..LO				87030-BZ163-	1		
1507 - 1901	F653				87030-BZ163-	1		
1901 -	F65#				87030-BZ163-	1		
	+----------+							
	| 87114B | COVER, HEATE							
	+----------+ R							
1111 - 1306	F65#	P4EB	W/CLEAN AIR FILTER		87114-BZ020-	1		
1306 - 1507	F65#				87114-BZ020-	1		
1507 - 1901	F65#				87114-BZ020-	1		
1901 -	F65#				87114-BZ020-	1		

FIG.87-14 HEATING & AIR CONDITIONING - COOLER UNIT

PROD_DATE	MODELS	SPEC CODE	DESCRIPTION	R/P	PART NUMBER	QYT	REV_REF FR	REV_REF TO
	+----------+							
	| 87138C | RESISTOR, BLOWER							
	+----------+							
1111 - 1507	F65#				87138-BZ070-	1		
1507 - 1901	F65#				87138-BZ070-	1		
1901 -	F65#				87138-BZ140-	1		
	+----------+							
	| 88304A | COOLER, EVAPORATOR							
	+----------+							
1111 - 1507	F65#				88304-BZ070-	1		
1507 - 1901	F65#				88304-BZ070-	1		
1901 -	F65#				88304-BZ070-	1		
	+----------+							
	| 88482A | COVER							
	+----------+							
1111 - 1507	F651				88714-87Z03-	1		
1507 - 1901	F653				88714-87Z03-	1		
1507 - 1901	F650..LO				88714-87Z03-	1		
1901 -	F65#				88714-BZ090-	1		
	+----------+							
	| 88501R | EVAPORATOR SUB-ASSY (REAR)							
	+----------+							
1111 - 1507	F651				88304-BZ060-	1		
1507 - 1607	F650..LO				88304-BZ060-	1		
1507 - 1901	F653				88304-BZ060-	1		
1901 -	F65#				88304-BZ060-	1		
	+----------+							
	| 88504 | CASE SUB-ASSY, COOLER BLOWER							
	+----------+							
1111 - 1206	F651		ASSY,NO.87030BZ160		88504-BZ030-	1		
1206 - 1308	F651		ASSY,NO.87030BZ161		88504-BZ030-	1		
1308 - 1412	F651		ASSY,NO.87030BZ162		88504-BZ030-	1		
1412 - 1507	F651		ASSY,NO.87030BZ163		88504-BZ030-	1		
1507 - 1607	F650..LO				88504-BZ030-	1		
1507 - 1901	F653				88504-BZ030-	1		

PROD_DATE	MODELS	SPEC CODE	DESCRIPTION	R/P	PART NUMBER	QYT	REV_REF FR	REV_REF TO
	+----------+							
	| 88504 | CASE SUB-ASSY, COOLER BLOWER							
	CONTINUED--+							
1901 -	F65#				88504-BZ030-	1		
	+----------+							
	| 88504A | CASE SUB-ASSY, BLOWER							
	+----------+							
1901 -	F65#				87103-BZ140-	1		
	+----------+							
	| 88510R | GROMMET (FOR COOLER UNIT)							
	+----------+							
1111 - 1507	F651				88897-87Z36-	1		
1507 - 1607	F650..LO				88897-87Z36-	1		
1507 - 1901	F653				88897-87Z36-	1		
1901 -	F65#				88897-87Z36-	1		
	+----------+							
	| 88515 | VALVE, COOLER EXPANSION							
	+----------+							
1111 - 1507	F65#				88515-BZ050-	1		
1507 - 1901	F65#				88515-BZ150-	1		
1901 -	F65#				88515-BZ150-	1		
	+----------+							
	| 88515B | VALVE, REAR COOLING UNIT EXPANSION							
	+----------+							
1111 - 1507	F651				88515-BZ010-	1		
1507 - 1607	F650..LO				88515-BZ010-	1		
1507 - 1901	F653				88515-BZ010-	1		
1901 -	F65#				88515-BZ010-	1		
	+----------+							
	| 88515F | BOLT(FOR COOLER EXPANSION VALVE)							
	+----------+							
1111 - 1507	F65#				C9909-97201-	2		
1507 - 1901	F65#				C9909-97201-	2		
1901 -	F65#				C9909-97201-	2		
	+----------+							
	| 88519A | HOLDER, REMOTE BULB, PARTS							
	+----------+							
1111 - 1507	F651				88519-87701-	1		

FIG.87-14 HEATING & AIR CONDITIONING - COOLER UNIT

PROD_DATE	MODELS	SPEC CODE	DESCRIPTION	R/P	PART NUMBER	QYT	REV_REF FR	REV_REF TO
	+----------+							
	| 88519A | HOLDER, REMOTE BULB, PARTS							
	CONTINUED--+							
1507 - 1607	F650..LO				88519-87701-	1		
1507 - 1901	F653				88519-87701-	1		
1901 -	F65#				88519-87701-	1		
	+----------+							
	| 88539 | HOSE, COOLER UNIT DRAIN, NO.1							
	+----------+							
1111 - 1507	F651				88539-BZ220-	2		
1507 - 1607	F650..LO				88539-BZ220-	2		
1507 - 1901	F653				88539-BZ220-	2		
1901 -	F65#				88539-BZ220-	2		
	+----------+							
	| 88539G | GROMMET (FOR COOLER UNIT DRAIN HOSE)							
	+----------+							
1111 - 1507	F651				9004A-48053-	2		
				#	(90044-80416-)	1		
1507 - 1607	F650..LO				9004A-48053-	2		
				#	(90044-80416-)	1		
1507 - 1901	F653				9004A-48053-	2		
				#	(90044-80416-)	1		
1901 -	F65#				9004A-48053-	2		
				#	(90044-80416-)	1		
	+----------+							
	| 88539J | HOSE, DRAIN COOLER							
	+----------+							
1111 - 1507	F65#				88539-BZ190-	1		
1507 - 1901	F65#				88539-BZ320-	1		
1901 -	F65#				88539-BZ320-	1		
	+----------+							
	| 88539K | HOSE, DRAIN COOLER							
	+----------+							
1507 - 1602	F65#		TYPE A		88839-BZ010-	1		
1602 - 1901	F65#		TYPE B		88839-BZ011-	1		
1901 -	F65#		TYPE B		88839-BZ011-	1		

PROD_DATE	MODELS	SPEC CODE	DESCRIPTION	R/P	PART NUMBER	QYT	REV_REF FR	REV_REF TO
	+----------+							
	| 88544A | CASE, COOLER BLOWER, UPPER							
	+----------+							
1111 - 1507	F651				88502-BZ040-	1		
1507 - 1607	F650..LO				88502-BZ040-	1		
1507 - 1901	F653				88502-BZ040-	1		
1901 -	F65#				88502-BZ040-	1		
	+----------+							
	| 88544B | CASE, COOLER BLOWER, LOWER							
	+----------+							
1111 - 1507	F651				88502-BZ140-	1		
1507 - 1607	F650..LO				88502-BZ140-	1		
1507 - 1901	F653				88502-BZ140-	1		
1901 -	F65#				88502-BZ140-	1		
	+----------+							
	| 88548B | CASE, AIR FILTER							
	+----------+							
1306 - 1507	F65#				88548-BZ020-	1		
	+----------+							
	| 88550B | MOTOR ASSY, BLOWER							
	+----------+							
1111 - 1507	F65#				88550-BZ070-	1		
1507 - 1806	F65#				87103-BZ100-	1		
1806 - 1901	F653..STD		ASSY,NO.88510BZ262		87103-BZ170-	1		
1806 - 1901	F653..LO		ASSY,NO.88510BZ252		87103-BZ170-	1		
1901 - 1902	F65#		ASSY,NO.88510BZ291		87103-BZ170-	1		
1902 -	F65#		ASSY,NO.88510BZ292		87103-BZ180-	1		
	+----------+							
	| 88561 | COVER, COOLER UNIT							
	+----------+							
1111 - 1306	F65#				9004C-33001-	1		
	+----------+							
	| 88568B | FILTER, AIR							
	+----------+							
1111 - 1306	F65#	P4EB	W/CLEAN AIR FILTER		88568-BZ040-	1		
1306 - 1507	F65#				88568-BZ060-	1		

FIG.87-14 HEATING & AIR CONDITIONING - COOLER UNIT

PROD_DATE	MODELS	SPEC CODE	DESCRIPTION	R/P	PART NUMBER	QYT	REV_REF FR	REV_REF TO
	+----------+							
	| 88568B | FILTER, AIR							
	CONTINUED--+							
1507 - 1901	F653..STD				88568-BZ050-	1		
1507 - 1901	F650				88568-BZ060-	1		
1507 - 1901	F653..LO				88568-BZ060-	1		
1901 -	F65#				88568-BZ050-	1		
	+----------+							
	| 88569F | CLAMP							
	+----------+							
1507 - 1602	F65#		TYPE A		88718-BZ730-	1		
1602 - 1901	F65#		TYPE B		88718-BZ731-	1		
1901 -	F65#		TYPE B		88718-BZ731-	1		
	+----------+							
	| 88569G | CLAMP							
	+----------+							
1507 - 1901	F653..STD				88888-BZ010-	1		
	+----------+							
	| 88578B | PACKING, COOLING UNIT, NO.1							
	+----------+							
1111 - 1507	F65#				88578-BZ570-	1		
1507 - 1901	F65#				88578-BZ570-	1		
1901 -	F65#				88578-BZ570-	1		
	+----------+							
	| 88578C | PACKING, COOLING UNIT, NO.2							
	+----------+							
1111 - 1507	F65#				88578-BZ580-	2		
1507 - 1705	F65#				88578-BZ580-	2		
	+----------+							
	| 88578V | PACKING, COOLING UNIT, NO.3							
	+----------+							
1111 - 1507	F651				88619-BZ080-	2		
1507 - 1901	F653				88619-BZ080-	2		
1507 - 1901	F650..LO				88619-BZ080-	2		
1901 -	F65#				88619-BZ080-	2		

PROD_DATE	MODELS	SPEC CODE	DESCRIPTION	R/P	PART NUMBER	QYT	REV_REF FR	REV_REF TO
	+----------+							
	| 88578W | PACKING, COOLING UNIT, NO.4							
	+----------+							
1111 - 1507	F651				88578-12100-	1		
1507 - 1901	F653				88578-12100-	1		
1507 - 1901	F650..LO				88578-12100-	1		
1901 -	F65#				88578-12100-	1		
	+----------+							
	| 88605F | FUSE(FOR COOLER WIRING HARNESS)							
	+----------+							
1111 - 1507	F651				82606-B0010-	1		
1507 - 1607	F650..LO				82606-B0010-	1		
1507 - 1901	F653				82606-B0010-	1		
1901 -	F65#				82606-B0010-	1		
	+----------+							
	| 88605W | HARNESS SUB-ASSY, WIRING AIR CONDITIONER							
	+----------+							
1111 - 1206	F651		ASSY,NO.87030BZ160		88605-BZ050-	1		
1206 - 1308	F651		ASSY,NO.87030BZ161		88605-BZ060-	1		
1308 - 1412	F651		ASSY,NO.87030BZ162		88605-BZ090-	1		
1412 - 1507	F651		ASSY,NO.87030BZ163		88605-BZ091-	1		
1507 - 1607	F650..LO				88605-BZ091-	1		
1507 - 1901	F653				88605-BZ091-	1		
1901 -	F65#				88605-BZ091-	1		
	+----------+							
	| 88625 | THERMISTOR, COOLER, NO.1							
	+----------+							
1111 - 1507	F65#				88625-BZ060-	1		
1507 - 1901	F65#				88625-BZ060-	1		
1901 -	F65#				88625-BZ060-	1		
	+----------+							
	| 88635R | RESISTOR, BLOWER							
	+----------+							
1111 - 1507	F651				88635-BZ010-	1		
1507 - 1901	F653				88635-BZ010-	1		

FIG.87-14 HEATING & AIR CONDITIONING - COOLER UNIT

PROD_DATE	MODELS	SPEC CODE	DESCRIPTION	R/P	PART NUMBER	QYT	REV_REF FR	REV_REF TO
	+----------+							
	| 88635R | RESISTOR, BLOWER							
	CONTINUED--+							
1507 - 1901	F650..LO				88635-BZ010-	1		
1901 -	F65#				88635-BZ020-	1		
	+----------+							
	| 88706F | TUBE SUB-ASSY, LIQUID, F							
	+----------+							
1111 - 1507	F651				9004B-91001-	1		
1507 - 1607	F650..LO				9004B-91001-	1		
1507 - 1901	F653				9004B-91001-	1		
1901 -	F65#				9004B-91001-	1		
	+----------+							
	| 88710F | RING, O							
	+----------+							
1111 - 1507	F65#				15188-87402-	1		
1507 - 1901	F65#				15188-87402-	1		
1901 -	F65#				15188-87402-	1		
	+----------+							
	| 88716V | RING, O(FOR COOLER UNIT)							
	+----------+							
1111 - 1507	F65#				15188-87403-	1		
1507 - 1901	F65#				15188-87403-	1		
1901 -	F65#				15188-87403-	1		
	+----------+							
	| 88891 | PACKING (FOR COOLER)							
	+----------+							
1111 - 1507	F651				88578-BZ490-	2		
1507 - 1901	F653				88578-BZ490-	2		
1507 - 1901	F650..LO				88578-BZ490-	2		
1901 -	F65#				88578-BZ490-	2		
	+----------+							
	| 88897K | GROMMET, (FOR COOLER PIPE)							
	+----------+							
1111 - 1507	F65#				88897-BZ160-	1		
1507 - 1901	F65#				88897-BZ160-	1		

PROD_DATE	MODELS	SPEC CODE	DESCRIPTION	R/P	PART NUMBER	QYT	REV_REF FR	REV_REF TO
	+----------+ | 88897K | GROMMET, (FOR COOLER PIPE) CONTINUED--+							
1901 -	F65#				88897-BZ160-	1		
	+----------+ | 88898D | GROMMET +----------+							
1111 - 1507	F65#				88897-87Z13-	1		
1507 - 1901	F65#				88897-87Z13-	1		
1901 -	F65#				88897-87Z13-	1		

(1111-1204)

AIR DUCT ILLUST NO. 2 OF 2

AIR DUCT

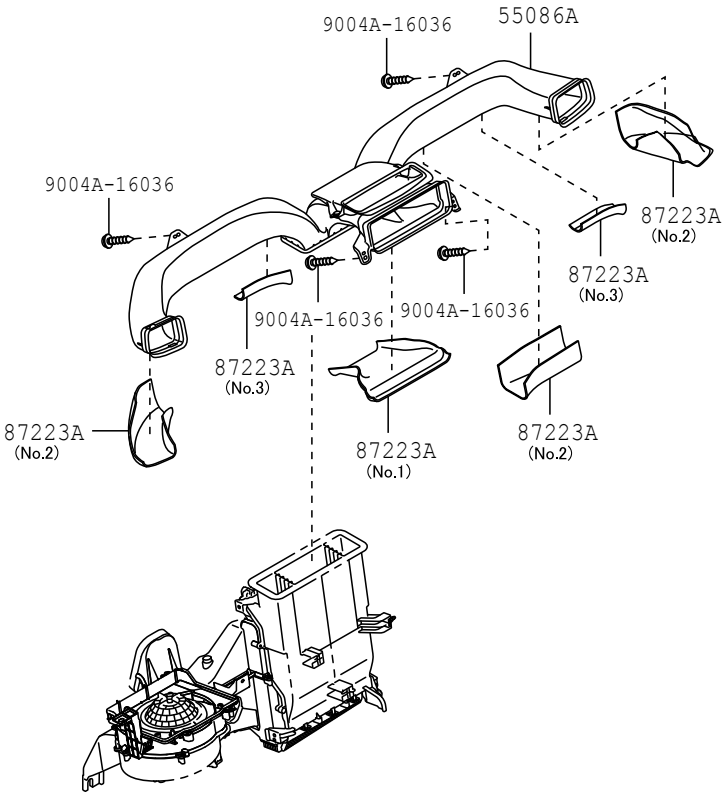

8715 87C490-B

(1111-1901)

CONTROL PANEL ILLUST NO. 1 OF 2

HEATER CONTROL

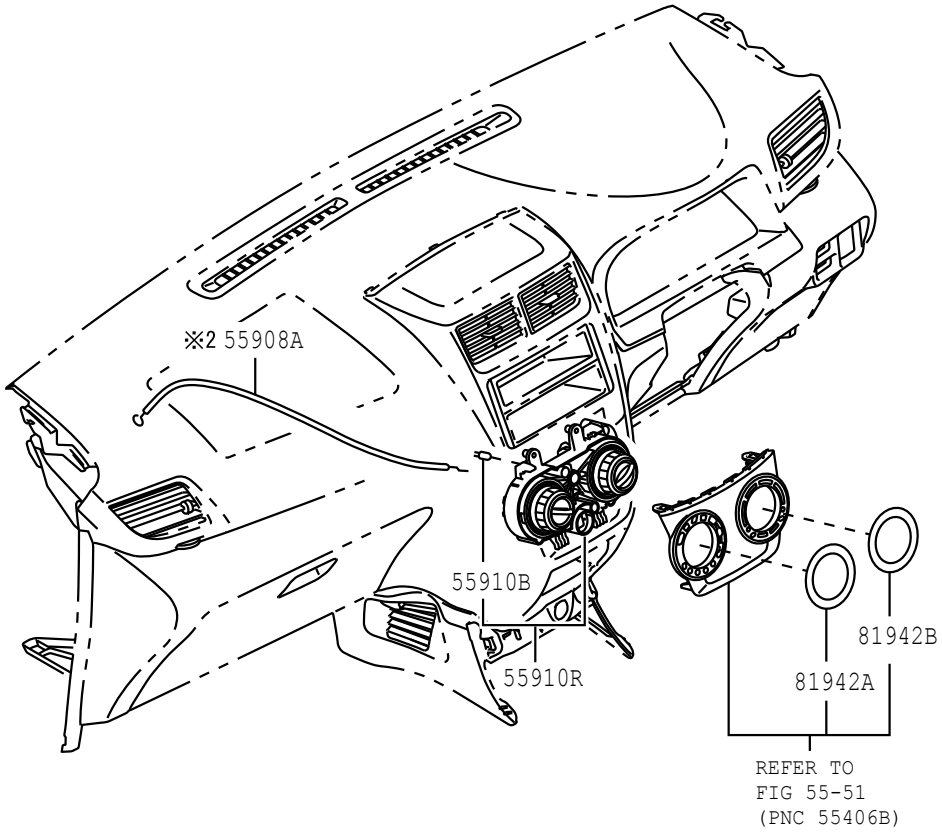

※2 W/AIR INTAKE CONTROL (1508-)

BLOWER CONTROL

※1

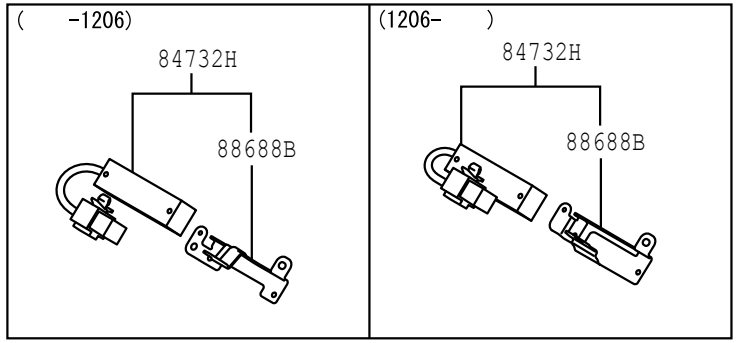

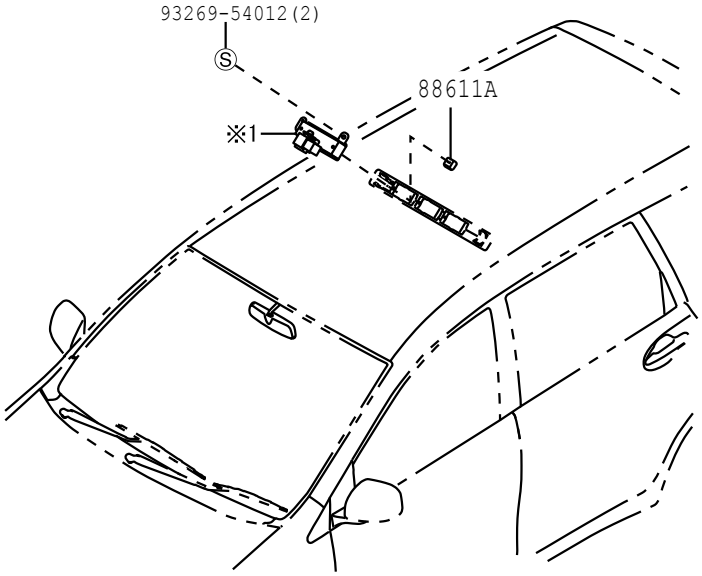

8715

87C974-F

(1204-1507)

AIR DUCT ILLUST NO. 2 OF 2

AIR DUCT

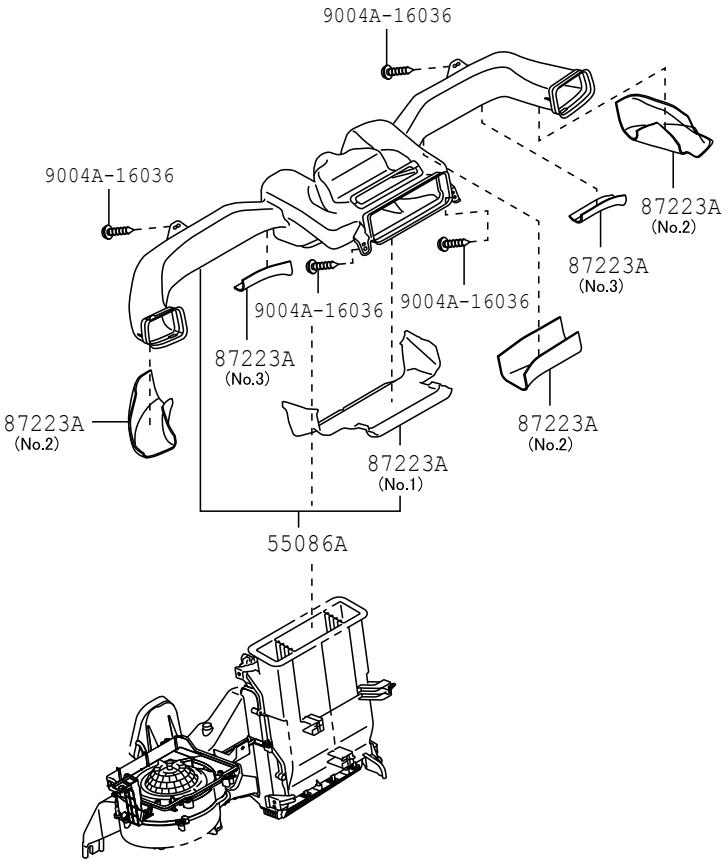

8715 87D010-A

(1507-1901)

AIR DUCT ILLUST NO. 2 OF 2

AIR DUCT

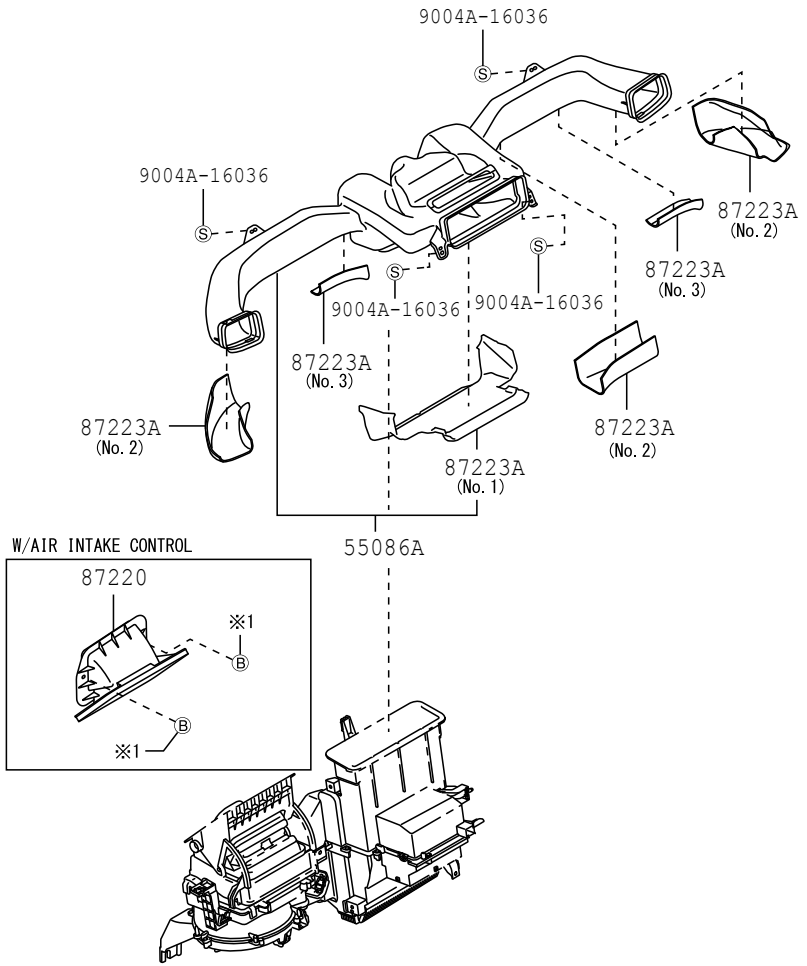

※1 90041-19175(-1607)
9004A-11342(1608-)

8715 87F178-B

(1901-)

CONTROL PANEL ILLUST NO. 1 OF 2

HEATER CONTROL

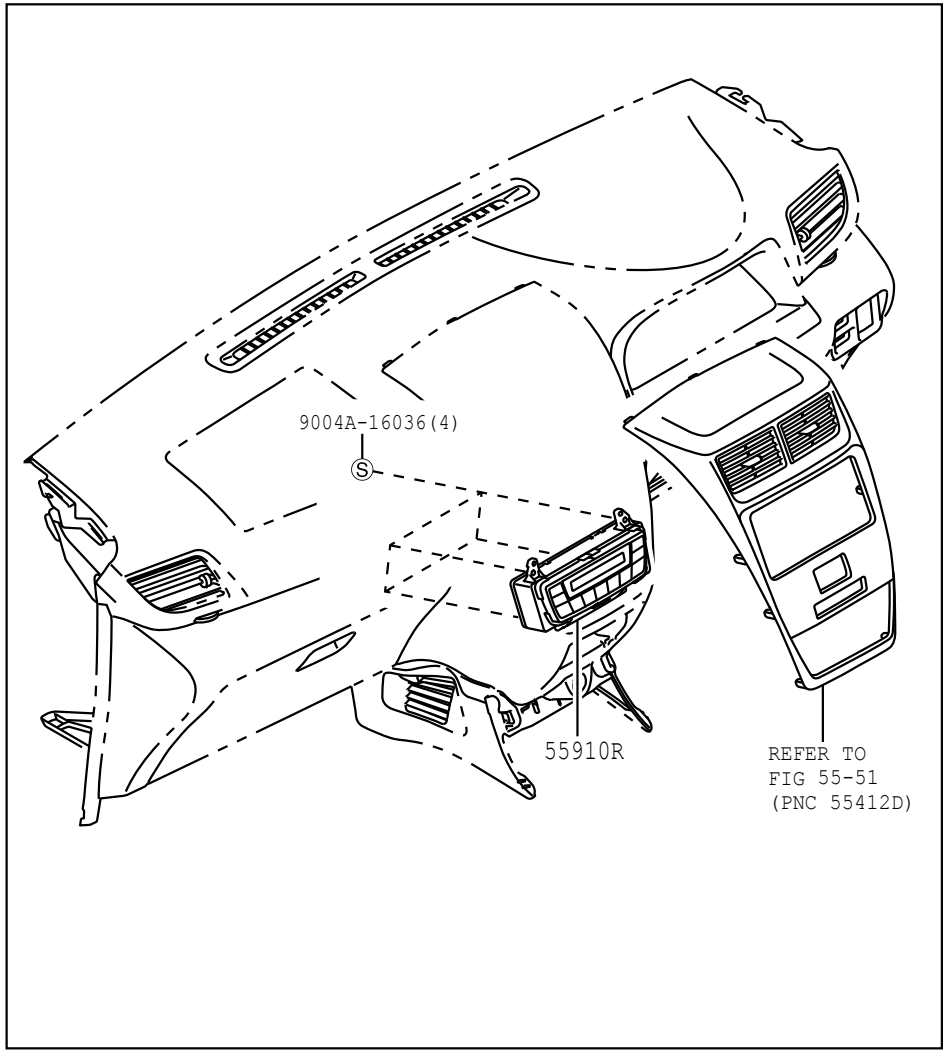

BLOWER CONTROL

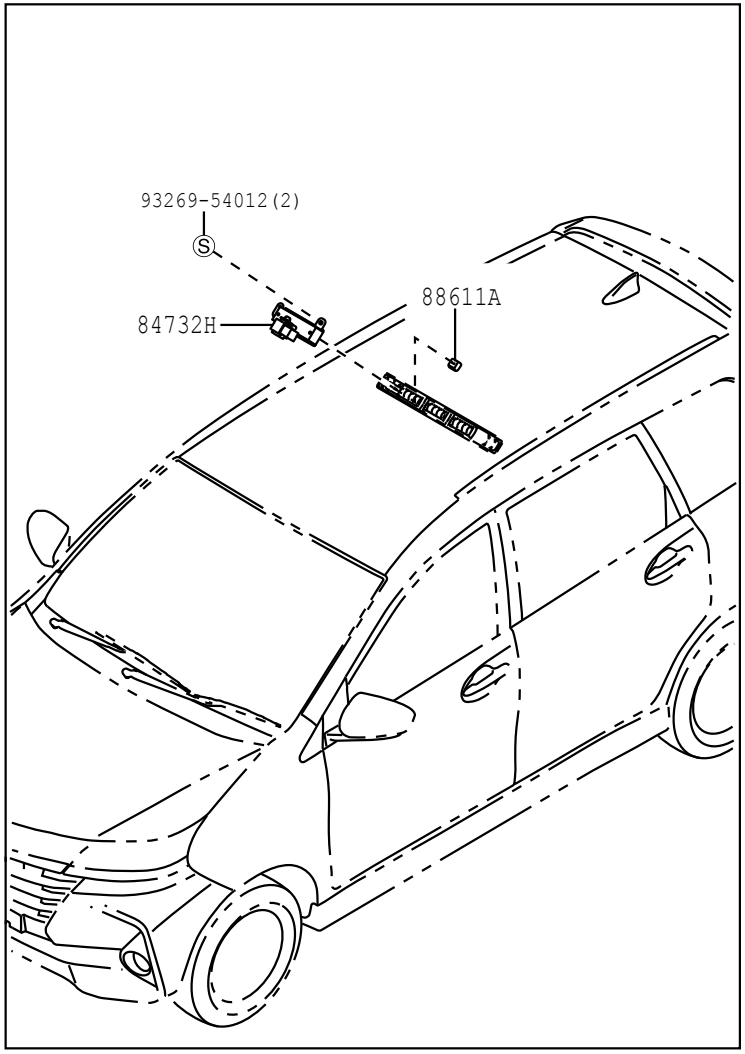

8715

87H505-A

(1901-)

AIR DUCT ILLUST NO. 2 OF 2

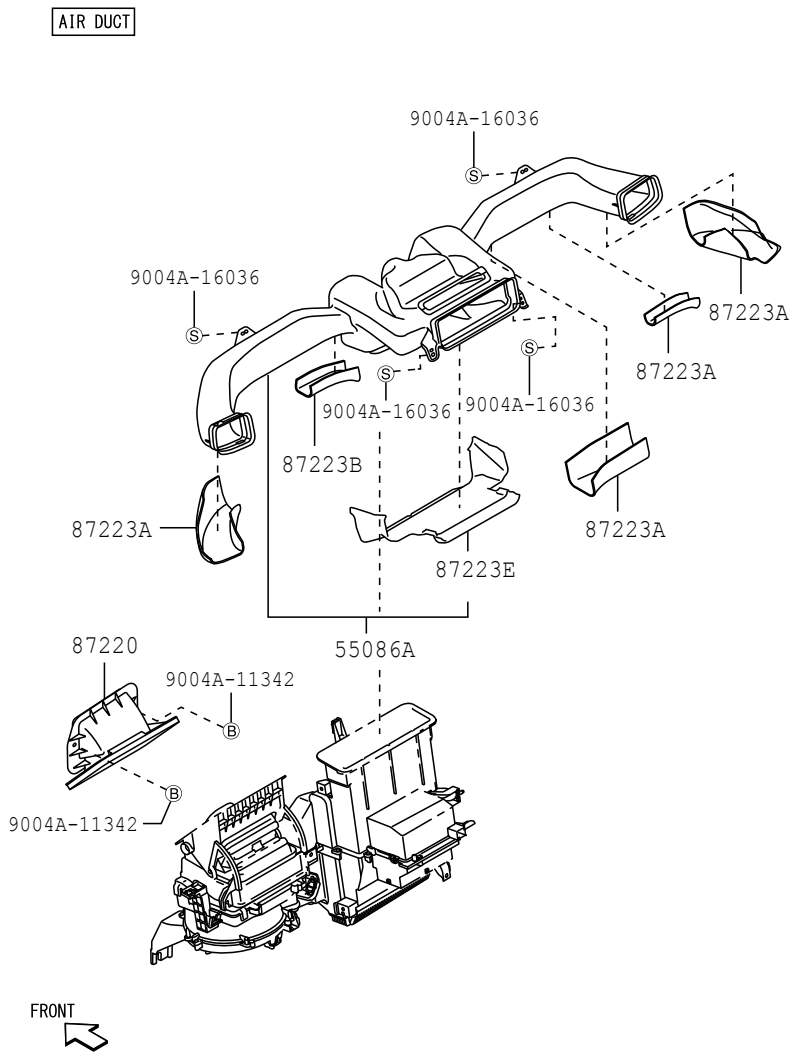

8715 87H508

FIG.87-15 HEATING & AIR CONDITIONING - CONTROL & AIR DUCT

PROD_DATE	MODELS	SPEC CODE	DESCRIPTION	R/P	PART NUMBER	QYT	REV_REF FR	REV_REF TO
	55086A DUCT SUB-ASSY, HEATER TO REGISTER, CENTER							
1111 - 1204	F65#				55086-BZ140-	1		
1204 - 1507	F65#				55086-BZ200-	1		
1507 - 1901	F65#				55086-BZ200-	1		
1901 -	F65#				55086-BZ200-	1		
	55908A CABLE SUB-ASSY, AIR INLET DAMPER CONTROL							
1507 - 1901	F653..STD				55908-BZ061-	1		
	55910B BULB, HEATER CONTROL							
1111 - 1507	F65#				81936-BZ020-	1		
1507 - 1901	F65#				81936-BZ020-	1		
	55910R CONTROL ASSY, HEATER							
1111 - 1507	F650..STD		BLACK(TRIM1#)		55910-BZ110-C0	1		
1111 - 1507	F651		BLACK(TRIM4#)		55910-BZ110-C0	1		
1111 - 1507	F650..LO		BLACK(TRIM4#)		55910-BZ110-C0	1		
1507 - 1607	F650..STD		BLACK(TRIM1#)		55910-BZ111-C1	1		
1507 - 1901	F65#..LO		BLACK(TRIM4#)		55910-BZ111-C1	1		
1507 - 1901	F653..STD		BLACK(TRIM4#)		55910-BZ362-C1	1		
1901 -	F65#				55910-BZ650-	1		
	81942A SHEET, HEATER CONTROL NAME, NO.1							
1111 - 1507	F65#				81942-BZ430-	1		
1507 - 1901	F65#				81942-BZ750-	1		
	81942B SHEET, HEATER CONTROL NAME, NO.2							
1111 - 1507	F65#				81942-BZ440-	1		
1507 - 1901	F650				81942-BZ760-	1		

PROD_DATE	MODELS	SPEC CODE	DESCRIPTION	R/P	PART NUMBER	QYT	REV_REF FR	REV_REF TO
	+----------+ | 81942B | SHEET, HEATER CONTROL NAME, NO.2 CONTINUED--+							
1507 - 1901	F653..LO				81942-BZ760-	1		
1507 - 1901	F653..STD				81942-BZ770-	1		
	+----------+ | 84732H | SWITCH, HEATER BLOWER +----------+							
1111 - 1206	F651				88470-BZ010-	1		
1206 - 1507	F651				88470-BZ011-	1		
1507 - 1901	F653				88470-BZ050-	1		
1507 - 1901	F650..LO				88470-BZ050-	1		
1901 -	F65#				88470-BZ050-	1		
	+----------+ | 87220 | DUCT ASSY, A +----------+ IR							
1507 - 1802	F653..STD				87220-BZ290-	1		
1803 - 1901	F653..STD				87220-BZ291-	1		
1901 -	F65#				87220-BZ291-	1		
	+----------+ | 87223A | PAD, AIR DUC +----------+ T							
1111 - 1204	F65#		NO.1		87223-BZ100-	1		
1111 - 1507	F65#		NO.2		87223-BZ110-	3		
1111 - 1507	F65#		NO.3		87223-BZ120-	2		
1204 - 1507	F65#		NO.1		87223-BZ130-	1		
1507 - 1607	F650		NO.2		87223-BZ110-	3		
1507 - 1607	F650		NO.3		87223-BZ120-	2		
1507 - 1607	F650		NO.1		87223-BZ130-	1		
1507 - 1901	F653		NO.2		87223-BZ110-	3		
1507 - 1901	F653		NO.3		87223-BZ120-	2		
1507 - 1901	F653		NO.1		87223-BZ130-	1		
1901 -	F65#				87223-BZ110-	4		

FIG.87-15 HEATING & AIR CONDITIONING - CONTROL & AIR DUCT

PROD_DATE	MODELS	SPEC CODE	DESCRIPTION	R/P	PART NUMBER	QYT	REV_REF FR	REV_REF TO
	+----------+ | 87223B | PAD, AIR DUCT, NO.2 +----------+							
1901 -	F65#				87223-BZ550-	1		
	+----------+ | 87223E | PAD, AIR DUCT, NO.5 +----------+							
1901 -	F65#				87223-BZ130-	1		
	+----------+ | 88611A | KNOB, COOLER CONTROL SWITCH +----------+							
1111 - 1507	F651		LT.GRAY(TRIM4#)		88611-BZ020-B1	1		
1507 - 1901	F653		LT.GRAY(TRIM4#)		88611-BZ080-B0	1		
1507 - 1901	F650..LO		LT.GRAY(TRIM4#)		88611-BZ080-B0	1		
1901 -	F65#		LT.GRAY(TRIM4#)		88611-BZ080-B0	1		
	+----------+ | 88688B | BRACKET, AIR CONDITIONER CONTROL +----------+							
1111 - 1206	F651				88463-BZ160-	1		
1206 - 1507	F651				84113-BZ010-	1		

FIG.87-18 HEATING & AIR CONDITIONING - COOLER PIPING

(1111-1507)

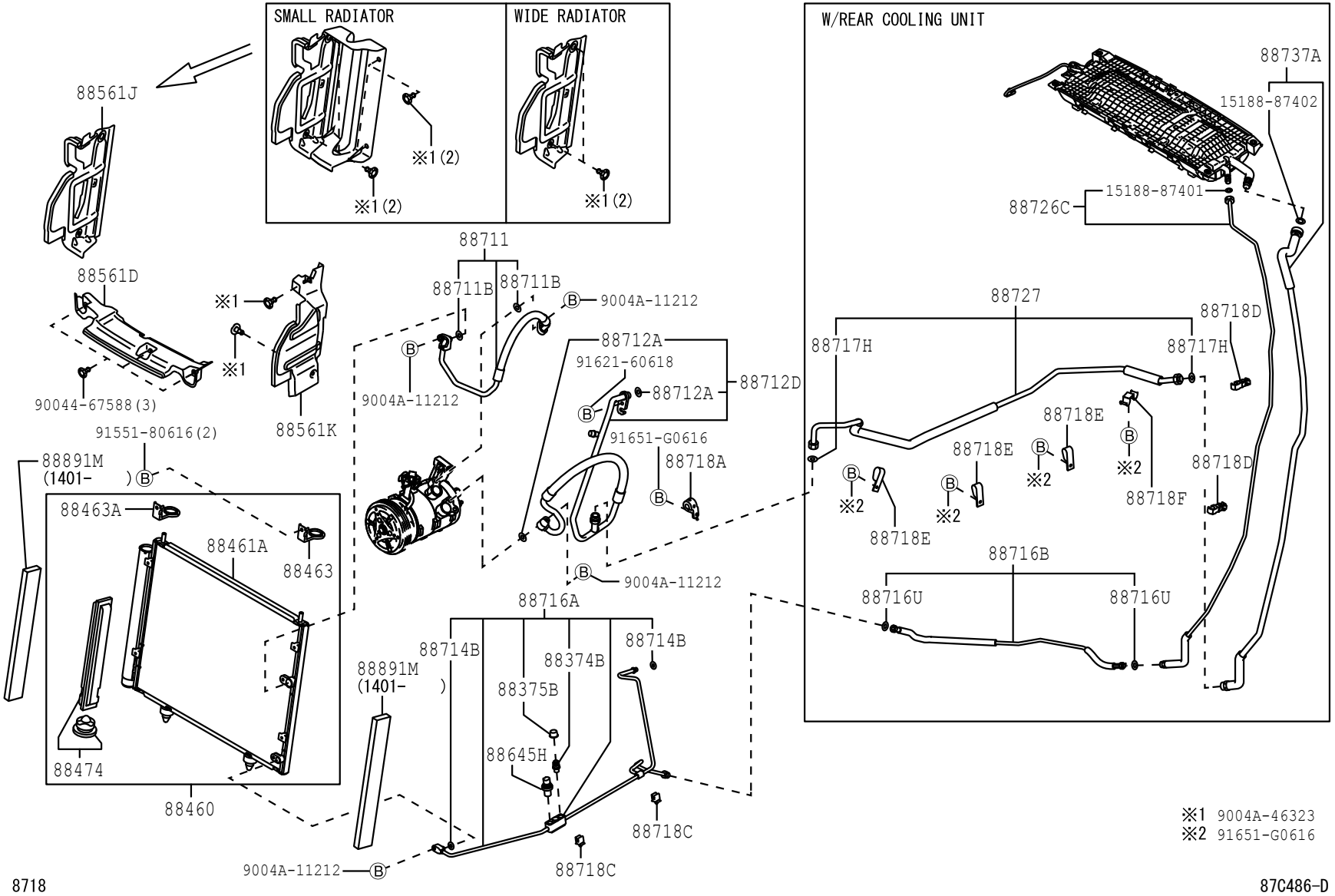

FIG.87-18 HEATING & AIR CONDITIONING - COOLER PIPING

(1507-)F650

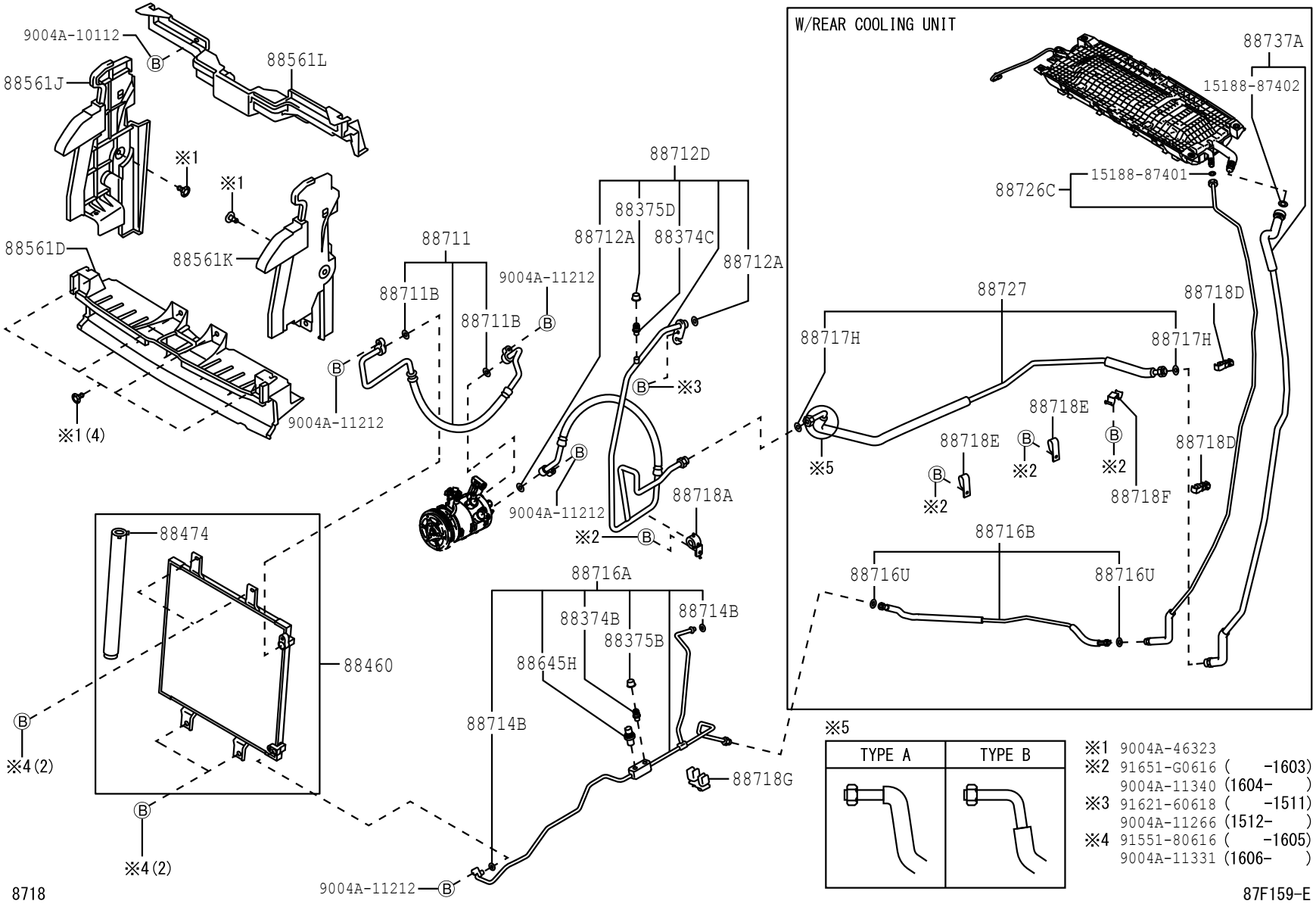

FIG.87-18 HEATING & AIR CONDITIONING - COOLER PIPING

(1507-)F653,654

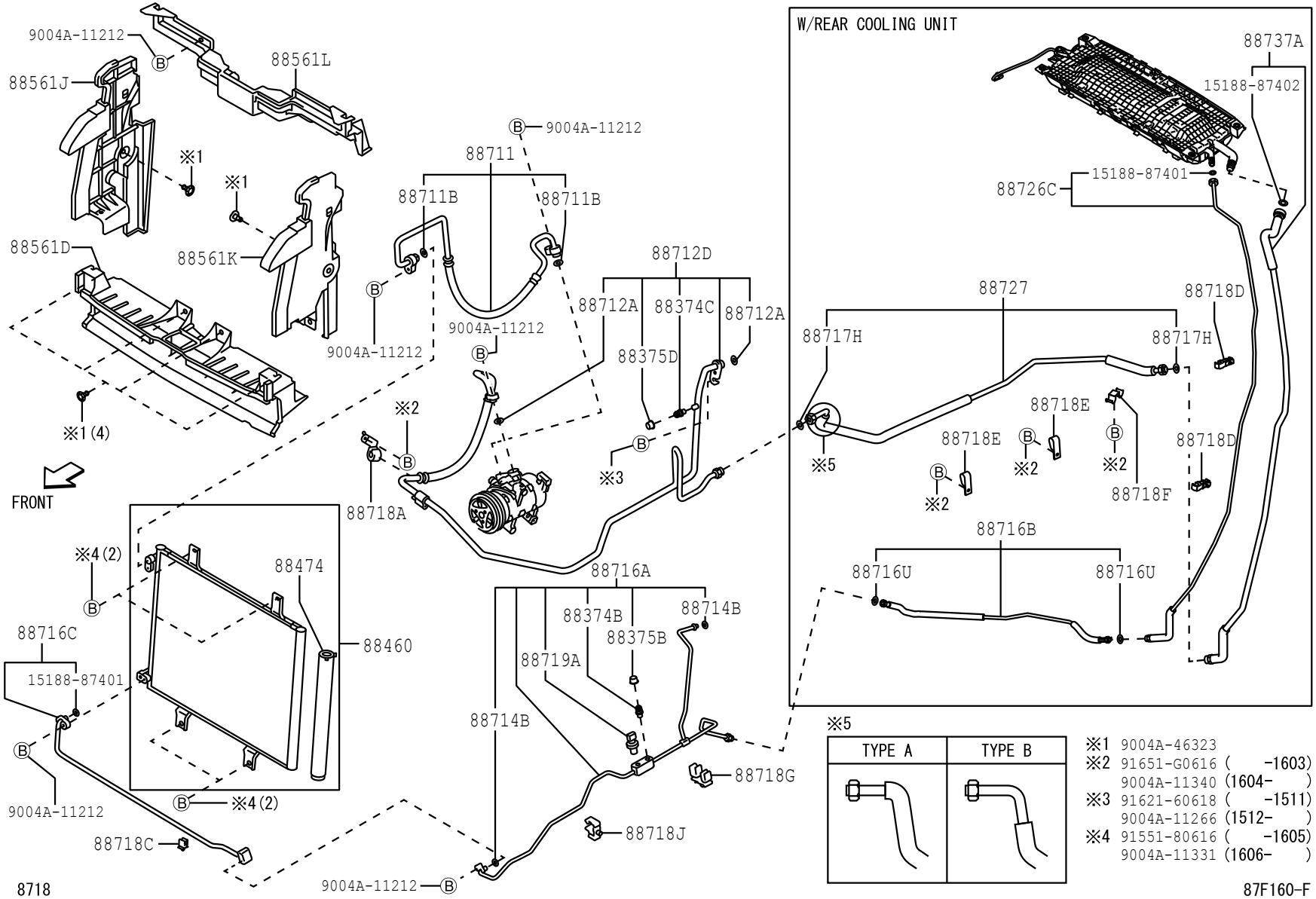

PROD_DATE	MODELS	SPEC CODE	DESCRIPTION	R/P	PART NUMBER	QYT	REV_REF FR	REV_REF TO
	+----------+							
	| 88374B | VALVE, SERVICE, NO.1							
	+----------+							
1111 - 1507	F65#				88374-87601-	1		
1507 - 1901	F65#				88374-87601-	1		
1901 -	F65#				88374-87601-	1		
	+----------+							
	| 88374C | VALVE, SERVICE, NO.2							
	+----------+							
1507 - 1901	F65#				88374-87601-	1		
1901 -	F65#				88374-87601-	1		
	+----------+							
	| 88375B | CAP, SERVICE VALVE, NO.1							
	+----------+							
1111 - 1507	F65#				88375-87603-	1		
1507 - 1901	F65#				88375-87603-	1		
1901 -	F65#				88375-87603-	1		
	+----------+							
	| 88375D | CAP, SERVICE VALVE, NO.2							
	+----------+							
1507 - 1901	F65#				88375-87601-	1		
1901 -	F65#				88375-87601-	1		
	+----------+							
	| 88460 | CONDENSER ASSY, COOLER							
	+----------+							
1111 - 1507	F65#				88460-BZ180-	1		
1507 - 1607	F650				88460-BZ230-	1		
1507 - 1901	F653				88460-BZ240-	1		
1901 -	F65#				88460-BZ240-	1		
	+----------+							
	| 88461A | CORE, COOLER CONDENSER							
	+----------+							
1111 - 1507	F65#				88461-BZ060-	1		
	+----------+							
	| 88463 | BRACKET, COOLER CONDENSER, NO.1							
	+----------+							
1111 - 1507	F65#				88463-BZ220-	1		

FIG.87-18 HEATING & AIR CONDITIONING - COOLER PIPING

PROD_DATE	MODELS	SPEC CODE	DESCRIPTION	R/P	PART NUMBER	QYT	REV_REF FR	REV_REF TO
	+----------+							
	| 88463A | BRACKET, COOLER CONDENSER, NO.2							
	+----------+							
1111 - 1507	F65#				88463-BZ230-	1		
	+----------+							
	| 88474 | DRYER, COOLE							
	+----------+ R							
1111 - 1507	F65#				88474-BZ010-	1		
1507 - 1901	F65#				88474-B2010-	1		
1901 -	F65#				88474-B2010-	1		
	+----------+							
	| 88561D | GRILLE, AIR INLET NO.3							
	+----------+							
1111 - 1507	F65#				88561-BZ220-	1		
1507 - 1901	F65#				88561-BZ370-	1		
1901 -	F65#				88561-BZ550-	1		
	+----------+							
	| 88561J | GRILLE, AIR INLET NO.1							
	+----------+							
1111 - 1507	F65#..5F				88561-BZ060-	1		
1111 - 1507	F651..E4AT				88561-BZ210-	1		
1507 - 1901	F65#				88561-BZ380-	1		
1901 -	F65#				88561-BZ560-	1		
	+----------+							
	| 88561K | GRILLE, AIR INLET NO.2							
	+----------+							
1111 - 1507	F65#				88561-BZ200-	1		
1507 - 1901	F65#				88561-BZ400-	1		
1901 -	F65#				88561-BZ580-	1		
	+----------+							
	| 88561L | GRILLE, AIR INLET NO.4							
	+----------+							
1507 - 1901	F65#				88561-BZ280-	1		
1901 -	F65#				88561-BZ280-	1		
	+----------+							
	| 88645H | SWITCH, PRESSURE NO.1							
	+----------+							
1111 - 1507	F65#				88645-87602-	1		

PROD_DATE	MODELS	SPEC CODE	DESCRIPTION	R/P	PART NUMBER	QYT	REV_REF FR	REV_REF TO
	+----------+							
	| 88645H | SWITCH, PRESSURE NO.1							
	CONTINUED--+							
1507 - 1607	F650				88645-87602-	1		
	+----------+							
	| 88711 | HOSE, COOLER REFRIGERANT DISCHARGE, NO.1							
	+----------+							
1111 - 1507	F650				88711-BZ360-	1		
1111 - 1507	F651				88711-BZ380-	1		
1507 - 1607	F650				88711-BZ550-	1		
1507 - 1710	F653				88711-BZ560-	1		
1711 - 1901	F653				88711-BZ561-	1		
1901 -	F65#				88711-BZ561-	1		
	+----------+							
	| 88711B | RING, O(FOR COOLER REFRIGERANT DISCHARGE HOSE)							
	+----------+							
1111 - 1507	F65#				15188-87402-	2		
1507 - 1901	F65#				15188-87402-	2		
1901 -	F65#				15188-87402-	2		
	+----------+							
	| 88712A | RING, O(FOR COOLER REFRIGERANT SUCTION HOSE)							
	+----------+							
1111 - 1507	F65#				15188-87403-	2		
1507 - 1901	F65#				15188-87403-	2		
1901 -	F65#				15188-87403-	2		
	+----------+							
	| 88712D | HOSE, SUCTIO							
	+----------+ N							
1111 - 1507	F650				88712-BZ420-	1		
1111 - 1507	F651				88712-BZ440-	1		
1507 - 1607	F650..STD				88712-BZ480-	1		
1507 - 1607	F650..LO				88712-BZ490-	1		
1507 - 1701	F653				88712-BZ590-	1		
1702 - 1901	F653				88712-BZ591-	1		
1901 -	F65#				88712-BZ591-	1		

FIG.87-18 HEATING & AIR CONDITIONING - COOLER PIPING

PROD_DATE	MODELS	SPEC CODE	DESCRIPTION	R/P	PART NUMBER	QYT	REV_REF FR	REV_REF TO
	+----------+							
	| 88714B | RING, O(FOR COOLER REFRIGERANT LIQUID HOS							
	+----------+ E)							
1111 - 1507	F65#				15188-87401-	2		
1507 - 1901	F65#				15188-87401-	2		
1901 -	F65#				15188-87401-	2		
	+----------+							
	| 88716A | PIPE, COOLER REFRIGERANT LIQUID, A							
	+----------+							
1111 - 1507	F650				88716-BZ550-	1		
1111 - 1507	F651				88716-BZ810-	1		
1507 - 1607	F650..STD				88716-BZB00-	1		
1507 - 1607	F650..LO				88716-BZB10-	1		
1507 - 1901	F653				88716-BZB30-	1		
1901 -	F65#				88716-BZB31-	1		
	+----------+							
	| 88716B | PIPE, COOLER REFRIGERANT LIQUID, B							
	+----------+							
1111 - 1507	F651				88716-BZ730-	1		
1507 - 1901	F653				88716-BZ730-	1		
1507 - 1901	F650..LO				88716-BZ730-	1		
1901 -	F65#				88716-BZ730-	1		
	+----------+							
	| 88716C | PIPE, COOLER REFRIGERANT LIQUID, C							
	+----------+							
1507 - 1901	F653				88716-BZB70-	1		
1901 -	F65#				88716-BZB70-	1		
	+----------+							
	| 88716U | RING, O(FOR COOLER REFRIGERANT LIQUID PIP							
	+----------+ E)							
1111 - 1507	F651				15188-87401-	2		
1507 - 1901	F653				15188-87401-	2		
1507 - 1901	F650..LO				15188-87401-	2		
1901 -	F65#				15188-87401-	2		

PROD_DATE	MODELS	SPEC CODE	DESCRIPTION	R/P	PART NUMBER	QYT	REV_REF FR	REV_REF TO
	+----------+							
	| 88717H | RING, O(FOR COOLER REFRIGERANT SUCTION PIPE)							
	+----------+							
1111 - 1507	F651				15188-87402-	2		
1507 - 1901	F653				15188-87402-	2		
1507 - 1901	F650..LO				15188-87402-	2		
1901 -	F65#				15188-87402-	2		
	+----------+							
	| 88718A | CLAMP, NO.1(FOR COOLER REFRIGERANT PIPE)							
	+----------+							
1111 - 1507	F65#				88718-BZ240-	1		
1507 - 1607	F650				88718-BZ240-	1		
1507 - 1901	F653				88718-BZ620-	1		
1901 -	F65#				88718-BZ620-	1		
	+----------+							
	| 88718C | CLAMP, NO.3(FOR COOLER REFRIGERANT PIPE)							
	+----------+							
1111 - 1507	F65#				88718-BZ280-	2		
				#	(88718-87732-)	1		
1507 - 1901	F653				88718-BZ280-	1		
				#	(88718-87732-)	1		
1901 -	F65#				88718-BZ280-	1		
				#	(88718-87732-)	1		
	+----------+							
	| 88718D | CLAMP, NO.4(FOR COOLER REFRIGERANT PIPE)							
	+----------+							
1111 - 1507	F651				88718-BZ720-	2		
1507 - 1901	F653				88718-BZ720-	2		
1507 - 1901	F650..LO				88718-BZ720-	2		
1901 -	F65#				88718-BZ720-	2		
	+----------+							
	| 88718E | CLAMP, NO.5(FOR COOLER REFRIGERANT PIPE)							
	+----------+							
1111 - 1507	F651				88718-BZ030-	2		
1507 - 1901	F653				88718-BZ030-	2		
1507 - 1901	F650..LO				88718-BZ030-	2		

FIG.87-18 HEATING & AIR CONDITIONING - COOLER PIPING

PROD_DATE	MODELS	SPEC CODE	DESCRIPTION	R/P	PART NUMBER	QYT	REV_REF FR	REV_REF TO
	+----------+							
	| 88718E | CLAMP, NO.5(FOR COOLER REFRIGERANT PIPE)							
	CONTINUED--+							
1901 -	F65#				88718-BZ030-	2		
	+----------+							
	| 88718F | CLAMP, NO.1(FOR COOLER REFRIGERANT HOSE)							
	+----------+							
1111 - 1507	F651				88718-BZ040-	1		
1507 - 1901	F653				88718-BZ040-	1		
1507 - 1901	F650..LO				88718-BZ040-	1		
1901 -	F65#				88718-BZ040-	1		
	+----------+							
	| 88718G | CLAMP, NO.2(FOR COOLER REFRIGERANT HOSE)							
	+----------+							
1507 - 1901	F65#				88718-BZ550-	1		
1901 -	F65#				88718-BZ550-	1		
	+----------+							
	| 88718J | CLAMP, NO.4(FOR COOLER REFRIGERANT HOSE)							
	+----------+							
1507 - 1901	F653				88718-BZ660-	1		
1901 -	F65#				88718-BZ660-	1		
	+----------+							
	| 88719A | SENSOR, AIR CONDITIONER PRESSURE							
	+----------+							
1507 - 1901	F653				88719-B2010-	1		
1901 -	F65#				88719-B2020-	1		
	+----------+							
	| 88726C | PIPE, COOLER REFRIGERANT LIQUID, C							
	+----------+							
1111 - 1507	F651				88716-BZ750-	1		
1507 - 1901	F653				88716-BZ750-	1		
1507 - 1901	F650..LO				88716-BZ750-	1		
1901 -	F65#				88716-BZ750-	1		
	+----------+							
	| 88727 | TUBE, SUCTION, NO.2							
	+----------+							
1111 - 1507	F651				88717-BZ280-	1		
1507 - 1602	F653		TYPE A		88717-BZ400-	1		8

PROD_DATE	MODELS	SPEC CODE	DESCRIPTION	R/P	PART NUMBER	QYT	REV_REF FR	REV_REF TO
	+----------+							
	| 88727 | TUBE, SUCTION, NO.2							
	CONTINUED--+							
1507 - 1602	F650..LO		TYPE A		88717-BZ400-	1		8
1602 - 1901	F653		TYPE B		88717-BZ401-	1	9	
1602 - 1901	F650..LO		TYPE B		88717-BZ401-	1	9	
1901 -	F65#		TYPE B		88717-BZ401-	1		
	+----------+							
	| 88737A | TUBE, SUCTION, A(FOR COOL BOX)							
	+----------+							
1111 - 1507	F651				88717-BZ300-	1		
1507 - 1901	F653				88717-BZ300-	1		
1507 - 1901	F650..LO				88717-BZ300-	1		
1901 -	F65#				88717-BZ300-	1		
	+----------+							
	| 88891M | PACKING							
	+----------+							
1401 - 1507	F65#				81818-BZ150-	2		

(1111-1507)F651

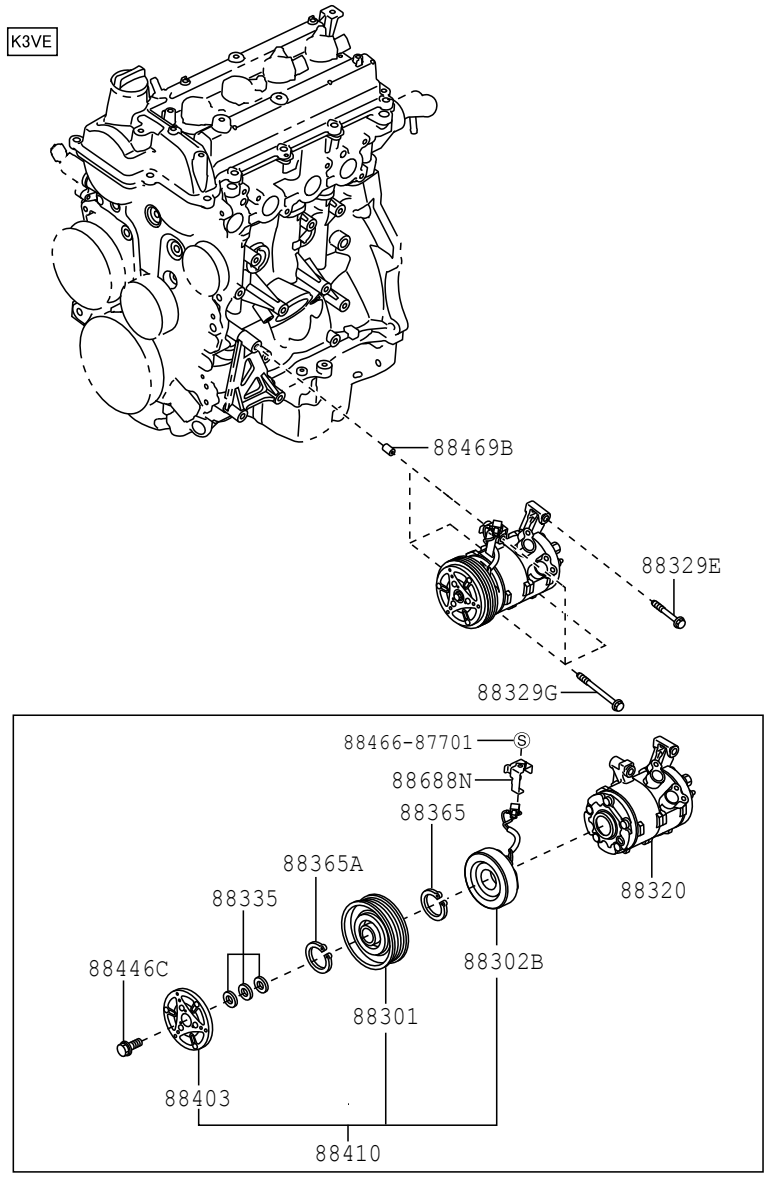

8719 87C542-C

(1111-1607)F650

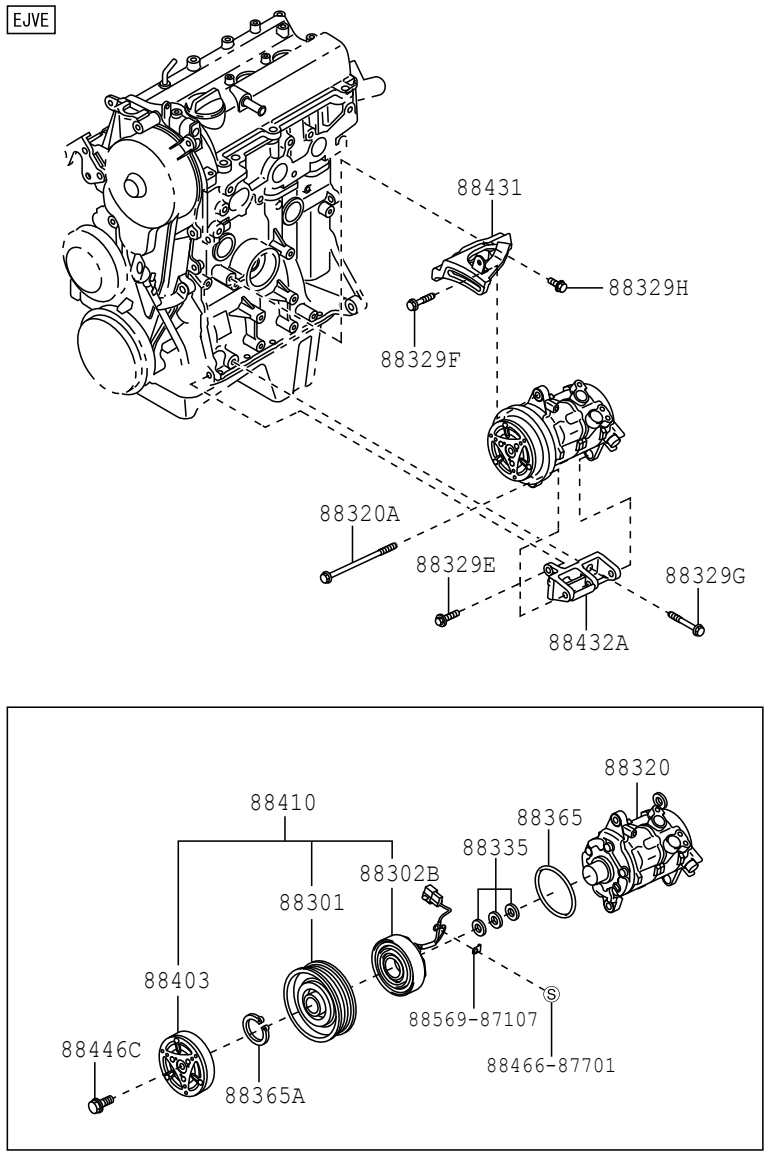

8719 87C543-D

(1507-)F653,654

NRVE

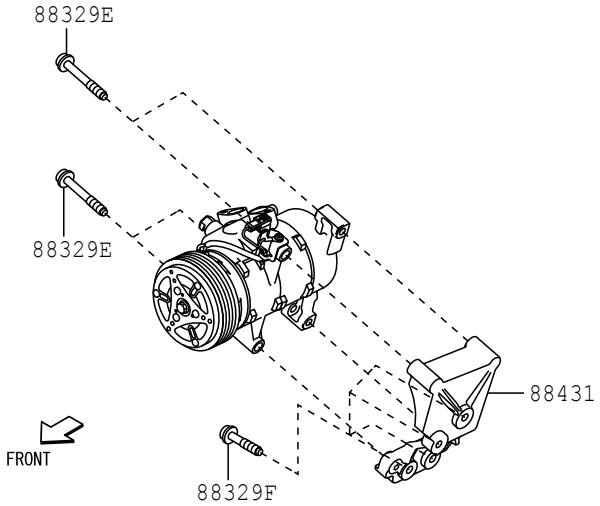

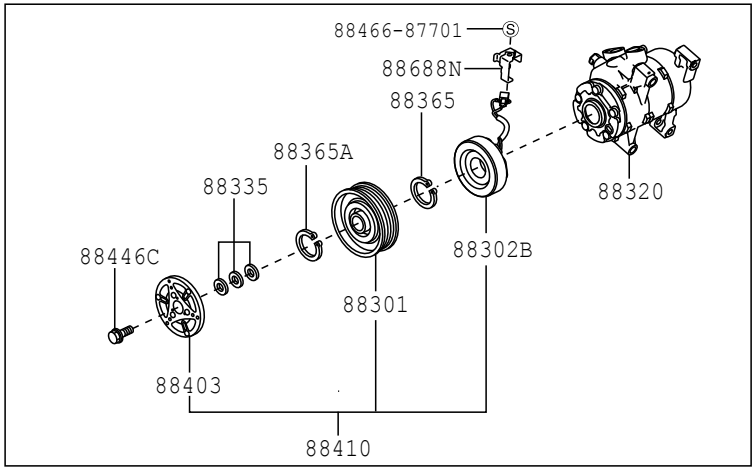

8719 87F163

FIG.87-19 HEATING & AIR CONDITIONING - COMPRESSOR

PROD_DATE	MODELS	SPEC CODE	DESCRIPTION	R/P	PART NUMBER	QYT	REV_REF FR	REV_REF TO
	88301	ROTOR SUB-ASSY, MAGNET CLUTCH						
1111 - 1507	F651				88412-BZ120-	1		
1111 - 1507	F650				88412-BZ130-	1		
1507 - 1607	F650				88412-BZ130-	1		
1507 - 1901	F653				88412-BZ110-	1		
1901 -	F65#				88412-BZ110-	1		
	88302B	STATOR, MAGNET CLUTCH						
1111 - 1507	F651				88411-BZ050-	1		
1111 - 1507	F650				88411-BZ130-	1		
1507 - 1607	F650				88411-BZ130-	1		
1507 - 1901	F653				88411-BZ190-	1		
1901 -	F65#				88411-BZ190-	1		
	88320	COMPRESSOR ASSY, COOLER						
1111 - 1507	F651				88320-BZ230-	1		
1111 - 1507	F650				88320-BZ240-	1		
1507 - 1607	F650..STD				88320-BZ240-	1		
1507 - 1607	F650..LO				88320-BZ310-	1		
1507 - 1901	F653				88320-BZ290-	1		
1901 -	F65#				88320-BZ290-	1		
	88320A	BOLT, THROUGH						
1111 - 1506	F650				90119-08B47-	1		
1507 - 1607	F650				88329-BZ020-	1		
	88329E	BOLT, COMPRESSOR, NO.1						
1111 - 1507	F650				90041-19411-	1		
1111 - 1507	F651				91551-80850-	1		

PROD_DATE	MODELS	SPEC CODE	DESCRIPTION	R/P	PART NUMBER	QYT	REV_REF FR	REV_REF TO
	+----------+							
	| 88329E | BOLT, COMPRESSOR, NO.1							
	CONTINUED--+							
1507 - 1510	F653				91551-80850-	4		
1507 - 1607	F650				90041-19411-	1		
1511 - 1901	F653				9004A-10144-	4		
1901 -	F65#				9004A-10144-	4		
	+----------+							
	| 88329F | BOLT, COMPRESSOR, NO.2							
	+----------+							
1111 - 1501	F650				91551-80830-	1		
1502 - 1507	F650				9004A-10146-	1		
				#	(91551-80830-)	1		
1507 - 1607	F650				9004A-10146-	1		
				#	(91551-80830-)	1		
1507 - 1901	F653				9004A-10146-	4		
				#	(91551-80830-)	1		
1901 -	F65#				9004A-10146-	4		
				#	(91551-80830-)	1		
	+----------+							
	| 88329G | BOLT, COMPRESSOR, NO.3							
	+----------+							
1111 - 1507	F651				91551-80880-	3		
1111 - 1507	F650		*10-1.25PX25-25		91652-B1025-	1		
1507 - 1511	F650		*10-1.25PX25-25		91652-B1025-	1		
1512 - 1607	F650				9004A-11321-	1		
				#	(91652-B1025-)	1		
	+----------+							
	| 88329H | BOLT, COMPRESSOR, NO.4							
	+----------+							
1111 - 1507	F650				9004A-11201-	2		
				#	(91611-70820-)	1		
1507 - 1607	F650				9004A-11201-	2		
				#	(91611-70820-)	1		
	+----------+							
	| 88335 | GASKET KIT, OVERHAUL							
	+----------+							
1507 - 1607	F650..STD		T=0.1		88318-87704-	1		

FIG.87-19 HEATING & AIR CONDITIONING - COMPRESSOR

PROD_DATE	MODELS	SPEC CODE	DESCRIPTION	R/P	PART NUMBER	QYT	REV_REF FR	REV_REF TO
	+----------+							
	| 88335 | GASKET KIT, OVERHAUL							
	CONTINUED--+							
1507 - 1607	F650..STD		T=0.3		88318-87705-	1		
1507 - 1607	F650..STD		T=0.5		88318-87706-	1		
1507 - 1901	F653				88335-14020-	1		
1507 - 1901	F650..LO				88335-14020-	1		
1901 -	F65#				88335-14020-	1		
	+----------+							
	| 88365 | RING, SNAP							
	+----------+							
1111 - 1507	F65#				90099-07125-	1		
				#	(90099-07125-000)	1		
1507 - 1901	F65#				90099-07125-	1		
				#	(90099-07125-000)	1		
1901 -	F65#				90099-07125-	1		
				#	(90099-07125-000)	1		
	+----------+							
	| 88365A | RING, SNAP (FOR COMPRESSOR)							
	+----------+							
1111 - 1507	F65#				90099-07114-	1		
1507 - 1901	F65#				90099-07114-	1		
1901 -	F65#				90099-07114-	1		
	+----------+							
	| 88403 | HUB SUB-ASSY, MAGNET CLUTCH							
	+----------+							
1111 - 1507	F65#				88403-BZ080-	1		
1507 - 1901	F65#				88403-BZ080-	1		
1901 -	F65#				88403-BZ080-	1		
	+----------+							
	| 88410 | CLUTCH ASSY, MAGNET							
	+----------+							
1111 - 1507	F651				88410-BZ220-	1		
1111 - 1507	F650				88410-BZ230-	1		
1507 - 1607	F650				88410-BZ230-	1		
1507 - 1901	F653				88410-BZ300-	1		

PROD_DATE	MODELS	SPEC CODE	DESCRIPTION	R/P	PART NUMBER	QYT	REV_REF FR	REV_REF TO
	+----------+							
	| 88410 | CLUTCH ASSY, MAGNET							
	CONTINUED--+							
1901 -	F65#				88410-BZ300-	1		
	+----------+							
	| 88431 | BRACKET, COMPRESSOR MOUNTING, NO.1							
	+----------+							
1111 - 1507	F650				88345-BZ060-	1		
1507 - 1607	F650				88345-BZ060-	1		
1507 - 1901	F653				88431-BZ130-	1		
1901 -	F65#				88431-BZ130-	1		
	+----------+							
	| 88432A | ATTACHMENT, COMPRESSOR							
	+----------+							
1111 - 1507	F650				88345-BZ050-	1		
1507 - 1607	F650				88345-BZ050-	1		
	+----------+							
	| 88446C | BOLT, MAGNET CLUTCH SETTING							
	+----------+							
1111 - 1507	F65#				90099-04349-	1		
				#	(90099-04349-000)	1		
1507 - 1901	F65#				90099-04349-	1		
				#	(90099-04349-000)	1		
1901 -	F65#				90099-04349-	1		
				#	(90099-04349-000)	1		
	+----------+							
	| 88469B | COLLAR							
	+----------+							
1111 - 1507	F651				9004A-38031-	3		
	+----------+							
	| 88688N | BRACKET, COOLER							
	+----------+							
1111 - 1507	F651				88688-BZ150-	1		
1507 - 1901	F653				88688-BZ200-	1		
1901 -	F65#				88688-BZ200-	1		