Table of Contents

Turbocharging Technology

Subject **Page**

Introduction 5
New Generation Engine Technology 5
EfficientDynamics 6
History of Turbocharging 7
Principles of Operation 7
BMW Twinpower Turbo: One Term – Three Different Turbo Technologies 9
Advanced Turbo Engines Use Less Fuel 9
Three Technologies – One Effect: Twin-Turbocharging 10
BMW TwinPower Turbo: one charger, two exhaust gas inlets. . . . 11
BMW TwinPower Turbo: two same-size chargers. 11
BMW TwinPower Turbo: two different-sized turbochargers. 11

Turbocharging 13
Turbocharging Terminology 13
Basic Principles of Turbocharging 13
Bi-Turbocharging 15
Twin Scroll Turbocharger 17
Function of the twin scroll turbocharger 19
Exhaust Manifold 20
N54 20
N55 21
N63 22
N74 23
Air Ducting Overview 24
Boost-Pressure Control (Wastegates) 32
Electropneumatic Pressure Transducers (EPDW) 33
Blow-off Control (Diverter Valves) 36
Load Control 39
Controlled Variables 41
Intake Boost Pressure and Temperature Sensor 42
Boost-pressure sensor 42
Intake temperature sensor 42
Intake-manifold Pressure Sensor 43

cardiagn.com

Subject **Page**

Charge Air Cooling (Intercoolers) 44
N54/N55 44
N63/N74 45

Turbocharger Diagnosis 49
Golden Rules 49
Controlled Variables 51
Limp-home Mode 51
Turbocharger System Check 52
1. Visual inspections 52
2. Active diagnosis of the turbochargers 52
3. Check the exhaust flap 53
4. Check the electropneumatic pressure converters (EPDW) 53
5. Check the intake system for leak-tightness with the diagnosis device 53
6. Check the wastegate and blow off valve (BOV/Diverter Valve) .54
7. Check the catalytic converter and turbo module 54
Intake-air Temperature of Charge-air Pressure Sensor 54
Functional Description 54
Boost pressure sensor 54
Intake-air temperature sensor 55
Characteristic Curve and Nominal Values 55
Failure of the Component 56
Intake Air Temperature Sensor (NOT Pressure) 57

cardiagn.com

Subject	Page

BLANK PAGE

cardiagn.com

Turbocharging Technology

Model: All

Production: All

OBJECTIVES

After completion of this module you will be able to:

- Explain which inputs does the DME use to calculate charge air.
- Locate the charge air pressure and/or Temperature sensors.
- Locate the electropneumatic pressure converters (EPDW) for the waste gate operation.
- Demonstrate the ability to check the power to the EPDW and verify the DME signal to the EPDW.
- Explain how the pulse width modulated signal changes with the operation of the waste gate.
- Demonstrate the ability to use a vacuum gauge, IMIB or vacuum pump to diagnose the vacuum lines from the EPDW to the wastegate(s) on the turbo(s).

cardiagn.com

Introduction

New Generation Engine Technology

In 2005, the first of the new generation 6-cylinder engines was introduced as the N52. The engine featured such innovations as a composite magnesium/aluminum engine block, electric coolant pump and Valvetronic for the first time on a 6-cylinder.

To further increase the power and efficiency of this design, three new engines where introduced for the 2007 model year. These engines are the N52 K, the N51 SULEV II and the N54.

The N52K (N52KP) engine is the naturally aspirated version of the new 6-cylinder engines. The ”K” designation indicates that there are various efficiency and cost optimization measures. This engine can also be referred to as the “KP” engine.

The measures include new optimized components such as the consolidation of various items such as the crankcase ventilation system into the cylinder head cover.

The N51 engine is introduced to comply with SULEV II requirements. The N51 features much of the same measures and technology as the previous SULEV engine, the M56.

The N54 engine is the first turbocharged powerplant in the US market. In addition to turbocharging, the N54 features second generation direct injection and double VANOS.

Based on the N54, the N63 twin turbo V8 was launched with the introduction of the E71 xDrive50i in 2008. It features double VANOS, DI and two turbochargers.

In 9/2009 the successor of N73, the N74 V12 was introduced with the launch of the F01/F02 760i/760Li. This engine largely based on N73 and N63 technology.

cardiagn.com

The N55 engine is the direct successor to the N54 engine and was introduced to the US market with the in the launched of the F07 535i Gran Turismo in the Spring of 2010. Technical updates and modifications make it possible to use only one exhaust turbocharger. The technical data have remained virtually the same - with reduced costs and improved quality.

The N55 combines for the first time Valvetronic III with double VANOS, direct injection and turbocharging and is referred to as TVDI.

EfficientDynamics

The central impetus in always striving for new innovations arises from the way in which the BMW marque sees itself, from the company's technological expertise and from the derived demands placed on the products. The Ultimate Driving Machine is the motif that underlies not only the expectations of the customers but also the challenges facing the engineers.

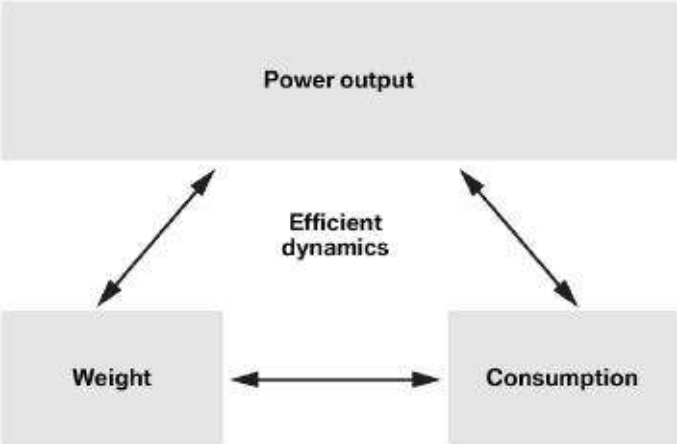

Thus, BMW is opening up further potential for engine technology with its turbocharged engines.

The spray-directed direct-injection process of high-precision injection (HPI) represents a lasting solution to reducing fuel consumption. In combination with this injection system, fundamental drawbacks of gasoline-engine turbocharging such as a reduced compression ratio and a high tendency to knock are avoided. This system ensures that the potential of turbocharging for increasing power and torque are fully exploited.

Today, however, driving pleasure is derived not just from the highest possible levels of dynamics but also increasingly from increased efficiency. Conscious enjoyment of the Ultimate Driving Machine also includes the certainty of not having to take pleasure in dynamics at the cost of excessively high fuel consumption. BMW has therefore defined the overall development of efficient dynamics with very clear specifications. Each new engine generation offers the preconditions for still better performance. At the same time, however, each new drive unit also always provides increased economy.

The incorporation of the latest turbocharger technology in conjunction with direct fuel injection, opens up the power potential of an engine with a larger cubic capacity, but avoids the associated consumption drawbacks.

Technical innovations at BMW are based on previous innovations and complement each other. Examples of this are the N54, N55, N63 and N74 engines, all of which use consumption-reducing technologies that maximize what EfficientDynamics is all about.

cardiagn.com

History of Turbocharging

As far as gasoline engines are concerned, turbocharging has not been in widespread use at BMW. As a matter of fact, the last turbocharged BMW production vehicle was the E23 (745) which was not officially imported into the US. The previous "turbo" model before that was the legendary 2002 tii turbo in the early 1970's. This 2002 tii turbo was also not officially imported into the US.

Until now, BMW has built a reputation for building high performance engines which are naturally aspirated. Much research has gone into the development of an efficient engine design which meets not only the expectations of the customer, but complies with all of the current emissions legislation.

Currently, the global focus has been centered around the use of alternative fuels and various hybrid designs. While BMW recognizes these concerns, there is still much development to be done on the internal combustion engine. Therefore, at least for the time being, BMW will continue to build some of best internal combustion engines in the world.

Principles of Operation

The turbocharger consists of a turbine and compressor assembly on a common shaft inside of the turbocharger housing. A turbocharger is driven by waste (exhaust) gasses and in turn drives a compressor which forces air into the engine above atmospheric pressure. This increase pressure allows for an air charge with a greater density. The result is increased torque and horsepower. The turbine and the compressor can rotate at speeds of up to **200,000 rpm** and the exhaust inlet temperature can reach max temperatures of up to **1050°C!**

cardiagn.com

This increased density during the intake stroke ultimately adds up to the creation of more engine output torque. Of course, this increased density must be accompanied by additional fuel to create the desired power. This is accomplished by engine management system programming to increase injector “on-time” and enhance associated maps.

The use of an exhaust driven turbocharger is used to create more engine power through increased efficiency. In the case of BMW turbocharged engines, the turbocharger is used in conjunction with direct fuel injection. This provides the best combination of efficiency and power with no compromise.

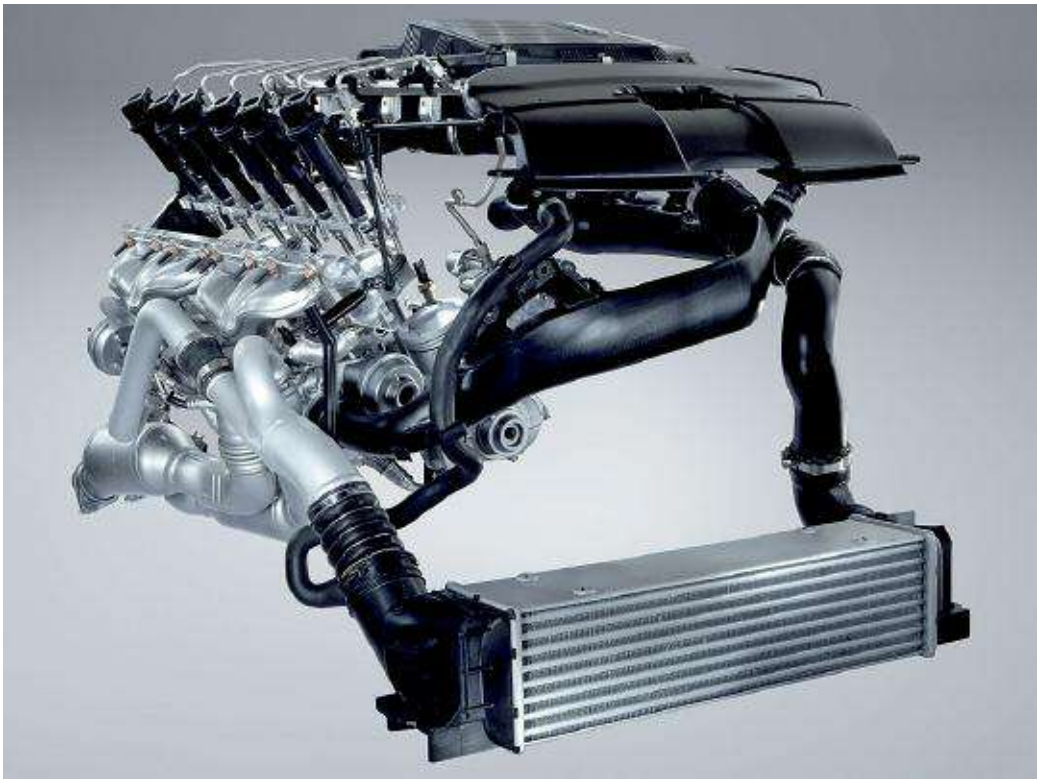

cardiagn.com

BMW Twinpower Turbo:
One Term – Three Different Turbo Technologies

The aim of further reducing fuel consumption and CO2 emissions in motor vehicles has led to a new trend referred to as "engine downsizing" by industry insiders: away from large-capacity naturally-aspirated engines towards smaller-sized turbo units. BMW is among the pioneers of this development, with the **BMW EfficientDynamics** strategy ensuring not just considerably improved fuel economy but also increased dynamic performance.

As expected, BMW went the usual step further in its turbocharger development, using twin chargers for its most powerful turbo units in each category. As a result, customers not only enjoy higher outputs, increased torque at lower engine speeds, and better fuel economy – they also notice these engines' more immediate response compared to conventional turbo units. While they are all referred to as **BMW TwinPower Turbo** engines, these powerplants in fact employ three different types of turbocharging technologies.

The three different turbocharging technologies for BMW TwinPower Turbo engines: to the left, a turbocharger powered by two exhaust gas streams (twin-scroll design), in the centre, the engine variant with two same-size chargers (parallel design), and to the right, the model with one small and one large charger (sequential design).

Advanced Turbo Engines Use Less Fuel

Until recently, gasoline turbo engines had a reputation of being exceedingly powerful while also using excessive amounts of fuel. Today's turbo engines are considerably less thirsty: advanced technologies such as electronically controlled injection or more heat-tolerant materials (which no longer require additional fuel to cool the combustion chamber at full load) ensure that the differences in fuel usage between naturally aspirated and turbocharged engines under high-load conditions have disappeared. The benefit of today's turbocharged engines is that they allow for outputs which in the past were only possible by increasing an engine's capacity and/or the number of cylinders, which inevitably entailed higher fuel consumption.

Today's solution is referred to as "engine downsizing". At the same time, current BMW turbo engines offer considerably higher torque at low revs than comparable engines without turbochargers. This pulling power "from below" enables a more refined ride at low revs, which in turn reduces fuel consumption during everyday driving.

cardiagn.com

Three Technologies – One Effect: Twin-Turbocharging

To combine great power with reduced fuel consumption, BMW now uses BMW TwinPower Turbo engines for its most powerful turbocharged models in each vehicle category. The BMW term refers to turbo engines (both gasoline and diesel units) that operate with twin-turbocharging.

Twin-turbocharging:

- Can refer to the use of **two turbochargers**. In this version, each turbocharger is powered by a separate exhaust stream.
- Can also refer to just one turbocharger powered by two separate exhaust streams. BMW refers to this technology as a **twin-scroll** design. Just like the system using two smaller chargers, this enables faster pressure build-up and therefore faster engine response.

Twin Scroll Turbocharger

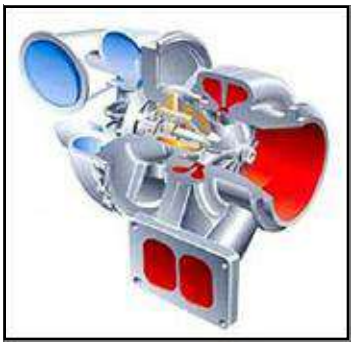

This means: the "twin" in the BMW TwinPower Turbo term represents either the **number of turbochargers** or, in the case of a single-charger system, the **number of exhaust gas inlets**. This technology provides an ideal way of combining fast, sporty response, high power output and excellent fuel efficiency.

BMW TwinPower Turbo thus refers to three different twin-turbocharging technologies:

- a **single turbocharger**, powered by two exhaust streams (e.g. BMW 535i, N55 with twin-scroll technology);
- **two same-size**, **smaller turbochargers** (e.g. BMW 750i, N63);
- **one large** and **one small turbocharger** operating in **sequence** (e.g. BMW X5 X35d M57TU Top).

cardiagn.com

BMW TwinPower Turbo: one charger, two exhaust gas inlets.
The six-cylinder in-line gasoline engine in the BMW 135i, BMW 335i, BMW 535i, BMW X3 xDrive35i, BMW X5 xDrive35i and BMW X6 xDrive35i is the latest-generation BMW engine. Its turbocharger is powered by two exhaust streams.

The **twin-scroll** technology makes the charger react especially fast. This single twin-scroll charger requires less space than two separate chargers, and provides additional weight-saving benefits. In conjunction with **High Precision Injection** (HPI) and **VALVETRONIC III** (variable valve lift control), this design ensures high power output and increased torque, coupled with excellent fuel efficiency. This combination is so far unique in engine manufacturing.

BMW TwinPower Turbo: two same-size chargers.
The six-cylinder gasoline models BMW Z4 sDrive35i, BMW Z4 sDrive35is, and BMW 740i; the eight-cylinder gasoline models BMW 550i, BMW 750i, BMW X5 xDrive50i, BMW X6 xDrive50i, and the twelve-cylinder BMW 760i, use the technology with **two same-size turbochargers**. They are set up in **parallel**, with each charger providing compressed air to half of the cylinders. And just like the variant with one turbocharger used for the new straight-six gasoline engines (see above), this design, in conjunction with **High Precision Injection** (HPI), enables superior power development and excellent fuel efficiency in each vehicle class.

BMW TwinPower Turbo: two different-sized turbochargers.
The most powerful four-cylinder diesel engine, used in the BMW 123d and BMW X1 xDrive23d (currently only available in Europe), and the most powerful six-cylinder in-line diesel engine, featured in the BMW 335d, BMW and X5 xDrive40d, use **one small and one large turbocharger operating in sequence.**

This system ideally complements the power and fuel consumption characteristics of our diesel engines and also enables superior performance and an almost unbelievably favorable output-to-fuel-consumption ratio.

cardiagn.com

NOTES PAGE

cardiagn.com

Turbocharging

Turbocharging Terminology

An engine which does not use any form of “forced induction” is referred to as a “naturally aspirated” engine. This means that the air which is entering the engine is at atmospheric pressure. Atmospheric air enters the engine due to the low pressure created during the intake stroke.

An engine which uses “forced induction” is referred to as supercharged. This means that the air entering the engine is under pressure (above atmospheric). As far as terminology is concerned, supercharging is the broad term for this type of technology.

Supercharging can be broken down into two categories, those engines which use a mechanical supercharger and those which use an exhaust driven turbocharger. Today, BMW is only using turbochargers.

Basic Principles of Turbocharging

In order to make an engine more efficient it is necessary to ensure an adequate supply of air and fuel on the intake stroke. This mixture can then be compressed and ignited to create the desired engine power output. A normally aspirated engine relies on the basic principle of gas exchange without the use of forced induction.

The volumetric efficiency refers to the ratio between the theoretical cylinder volume and the actual amount of air (and fuel) filling the cylinder during the intake stroke. A naturally aspirated engine has a volumetric efficiency of between 0.6 and 0.9 (60-90%). With the turbocharged engine, volumetric efficiency can peak at over 100%.

A turbocharger is driven by waste (exhaust) gasses and in turn drives a compressor which forces air into the engine above atmospheric pressure. This increase pressure allows for an air charge with a greater density. The result is increased torque and horsepower.

The turbocharger consists of a turbine and compressor assembly (1) on a common shaft inside of the turbocharger housing. The turbine wheel is driven by waste exhaust gases and in turn drives the compressor wheel.

The compressor forces air into the intake manifold of the engine. The air entering the engine from the compressor is above atmospheric pressure. The increased atmospheric pressure allows for an air-charge that is more dense and therefore contains more oxygen.

This increased density during the intake stroke ultimately adds up to the creation of more engine output torque. Of course, this increased density must be accompanied by additional fuel to create the desired power. This is accomplished by engine management system programming to increase injector “on-time” and enhanced associated maps.

cardiagn.com

To prevent the turbocharger from providing too much boost, a “wastegate” (6) is added to allow exhaust to bypass the turbine. This provides a means of control for the turbocharger system. The wastegate is usually actuated by a vacuum diaphragm (6) which is controlled via vacuum fed from solenoids. These solenoids are typically controlled by the engine management system.

Once the intake air is compressed, it is also heated which is not desirable for maximum efficiency. To counter this situation a heat exchanger (2) is added between the compressor and the engine intake. This heat exchanger is commonly referred to as an intercooler. The intercooler is usually an air-to-air heat exchanger which is installed in the air stream ahead of the radiator (direct charge air cooling) or air to coolant heat exchanger (indirect charge air cooling). Regardless of the type, the intercooler lowers the intake air charge to achieve the maximum density possible.

The use of an exhaust driven turbocharger is used to create more engine power through increased efficiency. In the case of the most current BMW engines, the turbocharger is used in conjunction with direct fuel injection. This provides the best combination of efficiency and power with no compromise.

Turbocharging principles

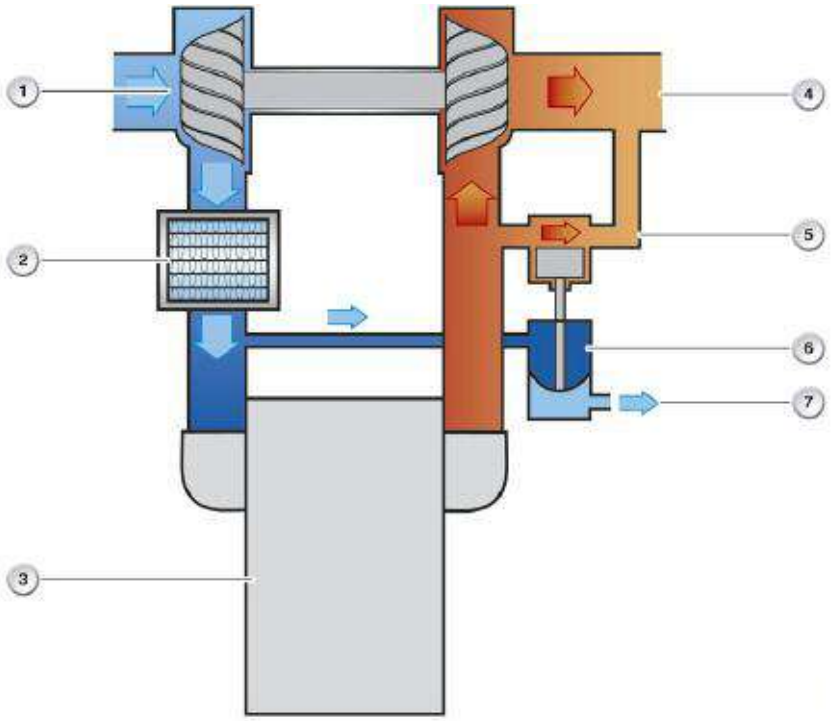

Index	Explanation	Index	Explanation
1	Compressor and turbine wheel (on common shaft)	5	Exhaust bypass from wastegate
2	Charge air cooler (intercooler)	6	Wastegate (and diaphragm)
3	Engine	7	Vacuum control for wastegate diaphragm
4	Exhaust outlet from turbine housing		

cardiagn.com

Bi-Turbocharging

The induction air is pre-compressed in such a way that a higher air mass is admitted into the engine's combustion chamber. In this way, it is possible to inject and combust a greater quantity of fuel, which increases the engine's power output and torque.

The turbine and the compressor can rotate at speeds of up to 200,000 rpm.
The exhaust inlet temperature can reach a maximum of 1050°C. Because of these high temperatures, turbochargers are not only connected with the engine-oil system but also integrated in the engine-coolant circuit.

By operating an electric coolant pump even after the engine has been switched off it is possible to dissipate the residual heat from the turbochargers and thus prevent the oil in the bearing housing from overheating.

N54 turbocharger

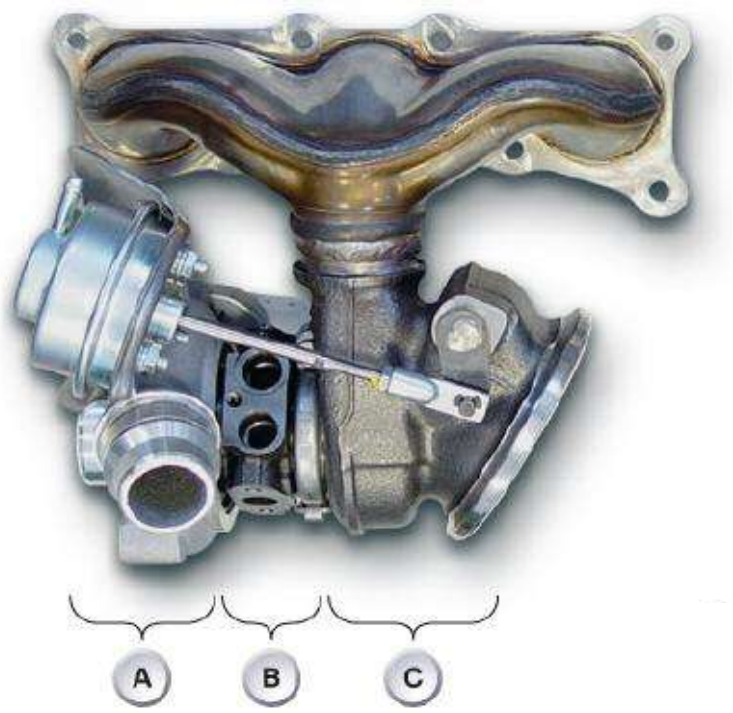

Index	Explanation
A	Compressor
B	Cooling/lubrication
C	Turbine

cardiagn.com

Utmost importance is attached to turbochargers response characteristics. A delayed response to the driver's command, i.e. the accelerator-pedal position, is not acceptable. The driver therefore must not experience any so-called "turbo lag".

This requirement is met in the **N54** engine with two small turbochargers, which are connected in parallel. Cylinders 1, 2 and 3 (bank 1) drive the first turbocharger (5) while cylinders 4, 5 and 6 (bank 2) drive the second (2).

The advantage of a small turbocharger lies in the fact that, as the turbocharger runs up to speed, the lower mass of the turbine alows it to accelerate quicker, and thus the compressor attains a higher boost pressure in a shorter amount of time.

NOTES

cardiagn.com

Twin Scroll Turbocharger

The **N55** is equipped with a single twin scroll turbocharger instead of two separate small turbochargers as on the N54 engine. The following graphics show the operating principle of the twin scroll turbocharger.

N55 Twin scroll turbocharger rear view

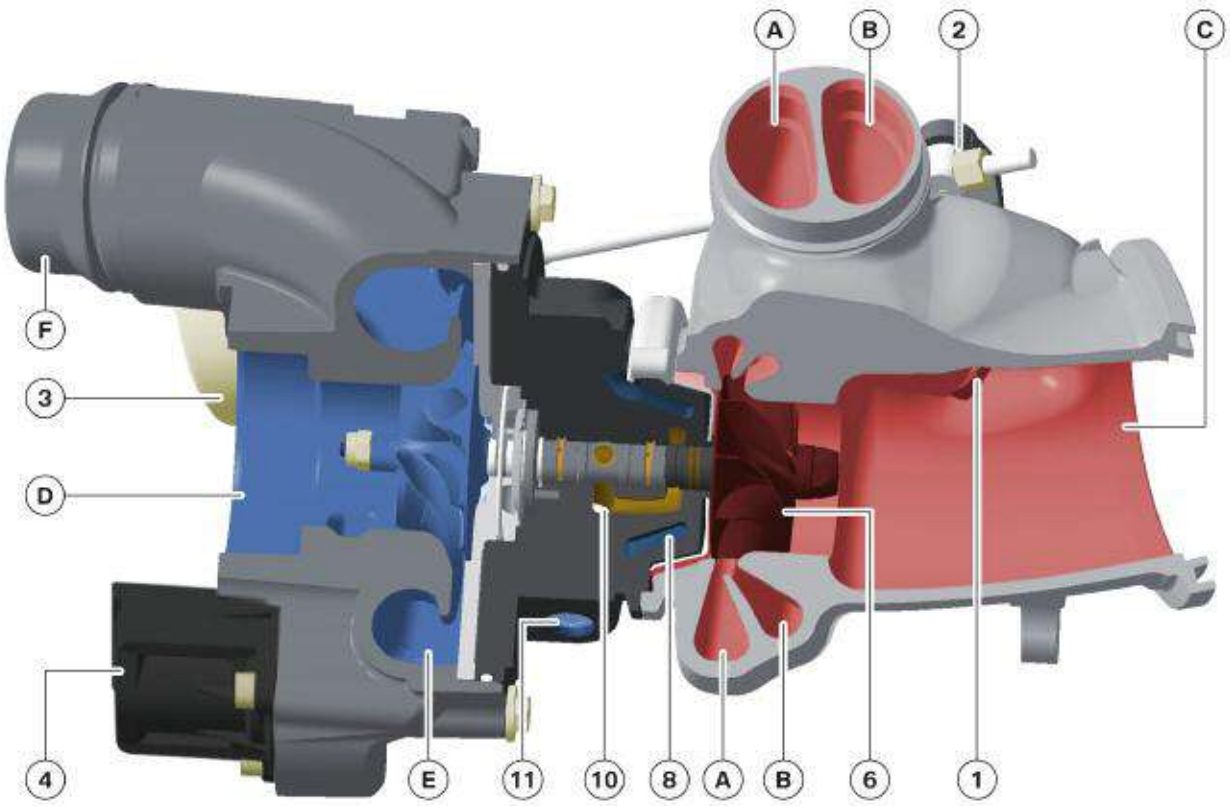

Index	Explanation	Index	Explanation
A	Exhaust duct 1 (cylinders 1 - 3)	2	Lever arm, wastegate valve
B	Exhaust duct 2 (cylinders 4 - 6)	3	Vacuum unit for wastegate valve
C	Connection to catalytic converter	4	Diverter valve
D	Inlet from intake silencer	6	Turbine wheel
E	Ring channel	8	Cooling duct
F	Outlet to intercooler	10	Oil return
1	Wastegate valve	11	Coolant return

cardiagn.com

Twin scroll turbocharger front view

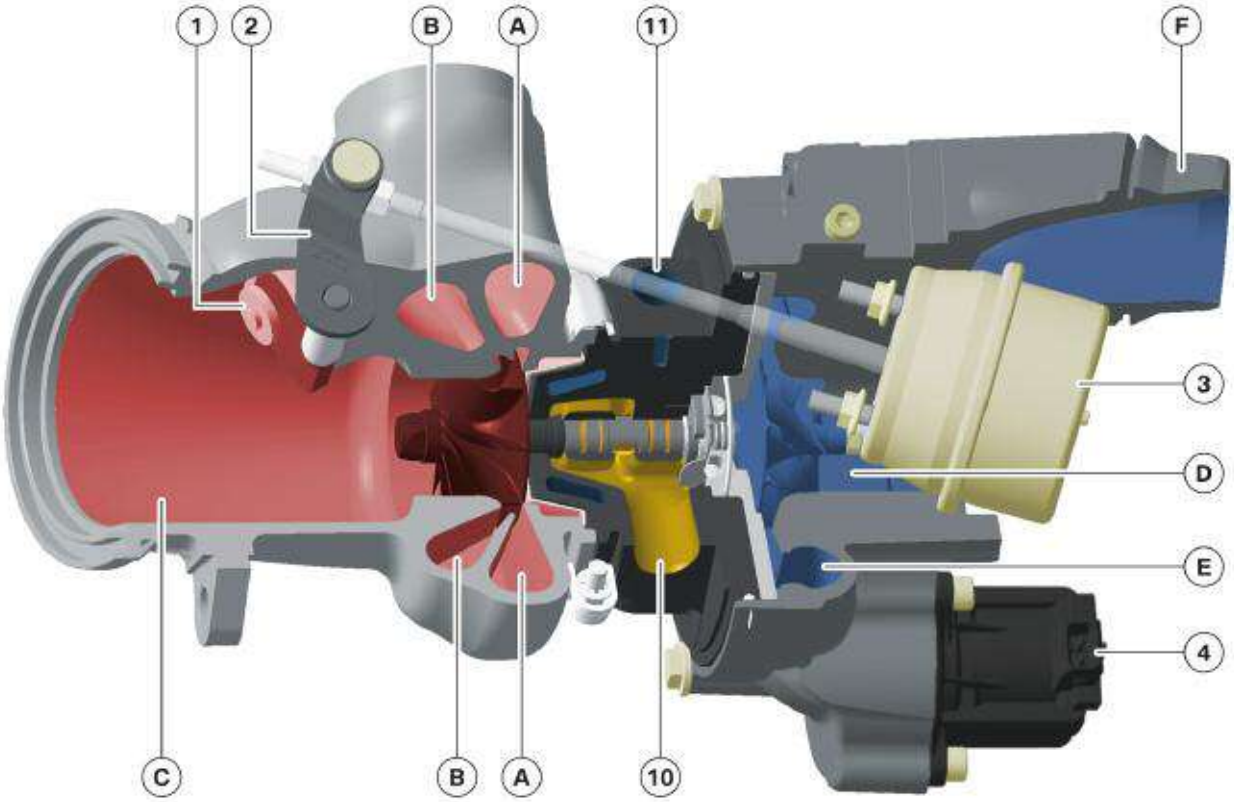

Index	Explanation	Index	Explanation
A	Exhaust duct 1 (cylinders 1 - 3)	1	Wastegate valve
B	Exhaust duct 2 (cylinders 4 - 6)	2	Lever arm, wastegate valve
C	Connection to catalytic converter	3	Vacuum unit for wastegate valve
D	Inlet from intake silencer	4	Diverter valve
E	Ring channel	10	Oil return
F	Outlet to intercooler	11	Coolant return

cardiagn.com

Function of the twin scroll turbocharger

The system is designed so that constant exhaust gas pressure is rearly applied to the turbocharger. At low engine speeds, the exhaust reaches the turbine in tuned pulsed form. Due to this pulsation, a higher pressure ratio is temporarily reached in the turbine. Since the efficiency increases as the pressure rises, the pulsation improves the boost pressure progression and thus the torque progression of the engine. This is the case particularly at low engine speeds.

The response characteristics of the twin scroll turbocharger are enhanced when compared to a single scroll setup. The turbocharger turbines are fed through two separate channels within the turbine housing (highlighted red in the graphic to the left). Each of these channels or “scrolls” is always fed by the exhaust pulses from the same two cylinders.

To limit the back pressure and ensure that the individual cylinders do not mutually influence each other during the cylinder charging process, cylinders 1 - 3 (bank 1) and cylinders 4 - 6 (bank 2) are combined to form two exhaust channels. The exhaust gas pulses in the exhaust channels (1 and 2) are directed into two scrolls (spirals) within the turbocharger to drive the turbine wheel. This design layout makes it possible to optimally use the exhaust pulsations for generating boost pressure based on the firing order of the engine. This improves engine efficiency by enhancing throttle response and limiting unwanted turbo lag.

The **wastegate** valve is used for the purpose of limiting the boost pressure and is already known from previous BMW turbo engines. It is vacuum operated and electronically controlled through a vacuum control solenoid by the ECM.

cardiagn.com

Exhaust Manifold

N54

The **N54** engine uses two small turbochargers connected in parallel. Cylinders 1, 2 and 3 (bank 1) drive the first turbocharger (5) while cylinders 4, 5 and 6 (bank 2) drive the second (2).

N54, exhaust manifolds, turbos and related components

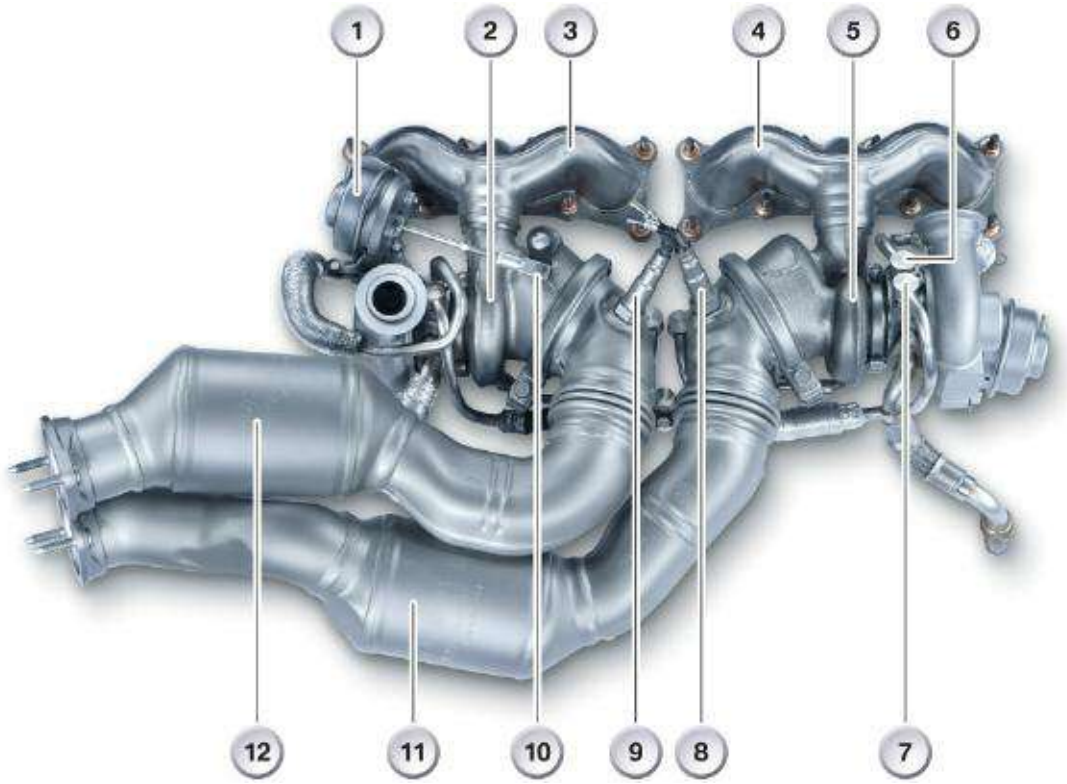

Index	Explanation	Index	Explanation
1	Wastegate actuator, bank 2	7	Coolant supply
2	Turbocharger, bank 2	8	Planar broad-band oxygen sensor, bank 1
3	Exhaust manifold, bank 2	9	Planar broad-band oxygen sensor, bank 2
4	Exhaust manifold, bank 1	10	Wastegate actuating lever
5	Turbocharger, bank 1	11	Catalytic converter, bank 1
6	Coolant return	12	Catalytic converter, bank 2

cardiagn.com

N55

On the **N55** the exhaust manifold is air-gap insulated and designed as a six ports into two chamber manifold. Dividing six exhaust ports into two exhaust chambers is necessary in order to ensure optimum flow to the twin scroll turbocharger. The exhaust pulses from the first three cylinders (1-3) feed one scroll (duct 1) of the turbo, while the last three (4-6) feed the second scroll (duct 2). The exhaust manifold and turbocharger are welded together to form one component.

N55, tuned pulsed exhaust manifold and turbocharger to engine block

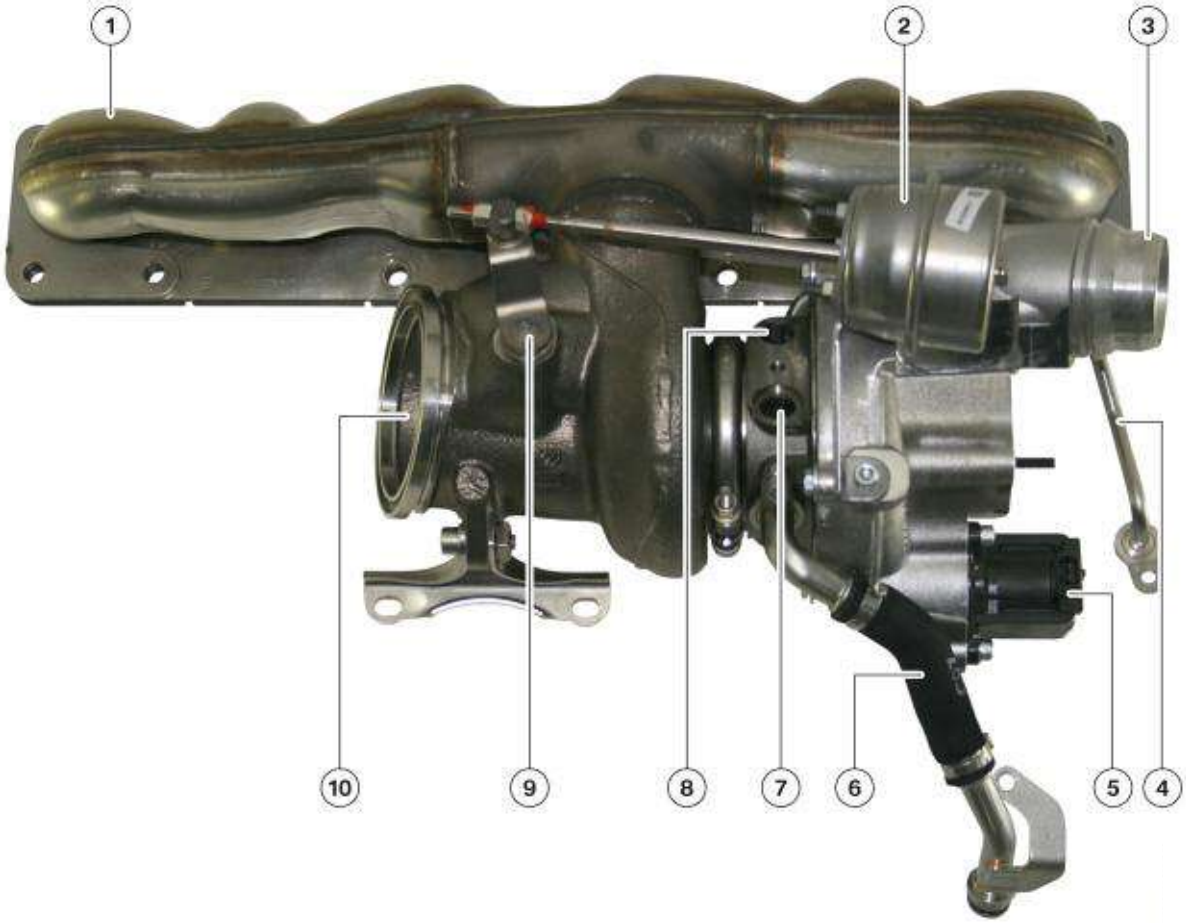

Index	Explanation	Index	Explanation
1	Exhaust manifold	6	Oil return line
2	Vacuum unit	7	Coolant infeed
3	Connection to intercooler	8	Coolant return
4	Oil feed line	9	Shaft, wastegate valve
5	Diverter valve	10	Connection to exhaust system

cardiagn.com

N63

The turbocharging principle of the **N63** engine is very similar to that of the N54 engine. Two relatively small, parallel-connected exhaust turbochargers ensure rapid response already at low engine speeds.

The main change to the air intake and exhaust system of the N63 engine is the interchanged positions of the intake and exhaust sides. Consequently, the exhaust manifolds and turbochargers as well as the catalytic converters are located in the V-space of the engine. This arrangement makes the N63 engine very compact despite the turbocharging. Blowoff valves are also used.

N63 Exhaust

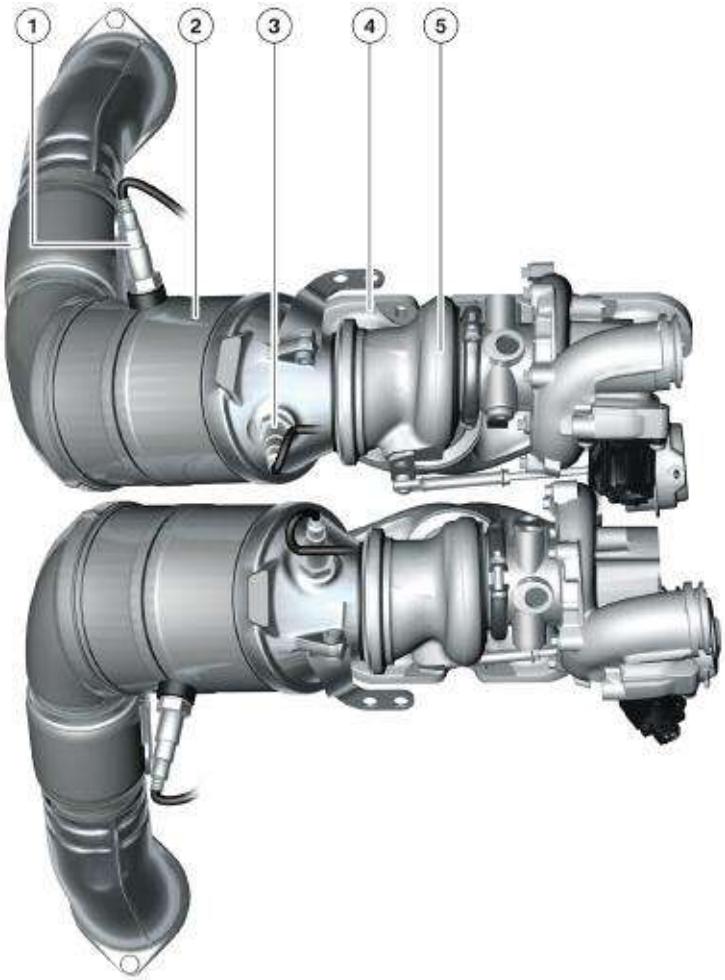

Index	Explanation	Index	Explanation
1	Oxygen sensor (monitor sensor LSF4.2 after catalytic converter)	4	Exhaust manifold
2	Catalytic converter	5	Exhaust turbocharger
3	Oxygen sensor (monitor sensor LSF ADV before catalytic converter)		

cardiagn.com

N74

The turbochargers on the **N74** engine are located on the outside. In the case of a V12-cylinder engine with 60° cylinder angle, this is the optimal arrangement of the turbocharger system.

These are conventional single scroll turbochargers (no variable turbine geometry, VNT, or twin scroll are used) in which vacuum-controlled wastegate valves are used for charging pressure control.

The turbocharging process on the N74 engine is identical, in terms of its principle to that utilised on the N63 engine. Each bank of cylinders has its own (relatively small) turbocharger, which ensures fast response even at low engine speeds. The charging pressure control is via wastegate valves. Blowoff valves are also used.

N74 Exhaust

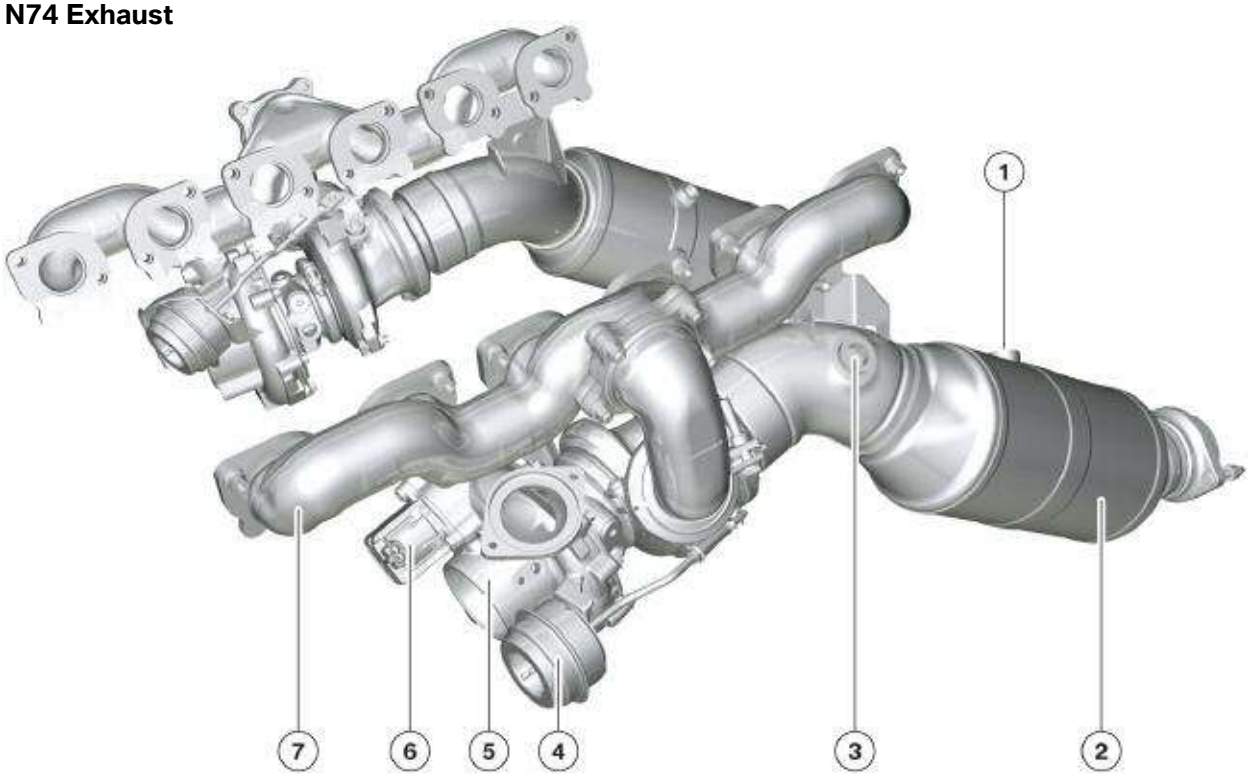

Index	Explanation	Index	Explanation
1	Position of exhaust gas oxygen sensor (monitoring sensor) after catalytic converter	5	Exhaust turbocharger
2	Catalytic converter	6	Diverter (blow-off) valve
3	Position of exhaust gas oxygen sensor (control sensor) before catalytic converter	7	Exhaust manifold
4	Vacuum unit for wastegate valve activation		

cardiagn.com

Air Ducting Overview

The fresh air is drawn in via the air cleaner (10) and the charge-air suction lines (6 + 18) by the compressors of turbochargers (23 + 24) and compressed.

Because the turbochargers can get very hot during operation, they are connected with the engine's coolant and engine-oil circuits. The charge air is greatly heated when compressed in the turbocharger, making it necessary for the air to be cooled again in an intercooler (16).

The compressed and cooled charge air is routed from the intercooler via the throttle valve (12) into the intake manifold. The system is equipped with several sensors and actuators in order to ensure that the load of fresh air is optimally adapted to the engine's respective operating conditions. How these complex interrelationships are controlled is discussed in the following.

N54 forced induction overview

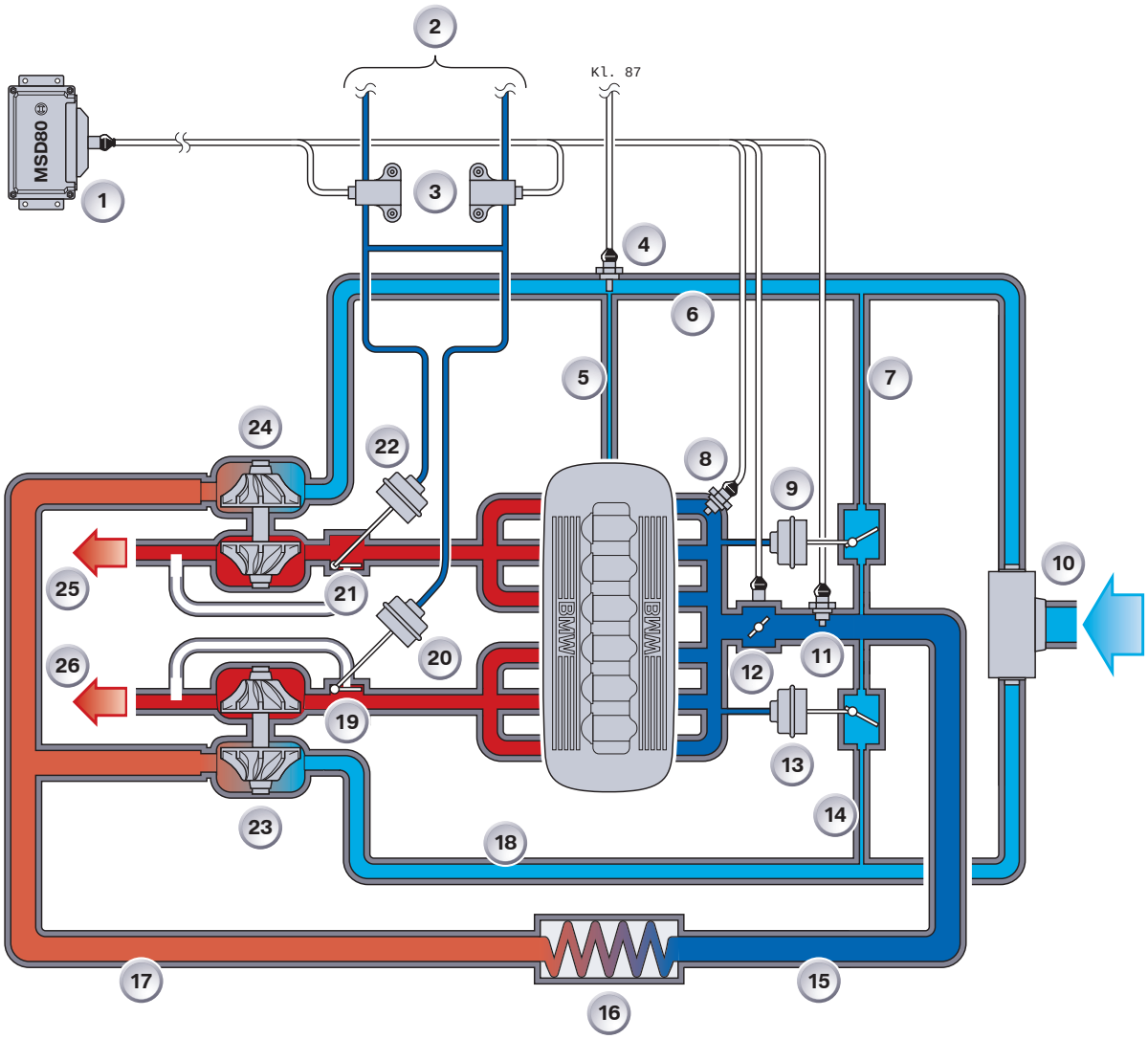

cardiagn.com

N54 forced induction overview legend

Index	Explanation	Index	Explanation
1	MSD80 Engine control module	14	Recirculated-air line, bank 1
2	Lines to vacuum pump	15	Charge air pressure line
3	Electro-pneumatic pressure transducer	16	Intercooler
4	Heater, blow-by gases	17	Charge air manifold
5	Blow-by line turbocharged operation mode	18	Charge air suction line, bank 1
6	Charge air suction line, bank 2	19	Wastegate flap, bank 1
7	Recirculated-air line, bank 2	20	Wastegate actuator, bank 1
8	Intake manifold pressure sensor	21	Wastegate flap, bank 2
9	Blow-off valve, bank 2	22	Wastegate actuator, bank 2
10	Air cleaner	23	Turbocharger, bank 1
11	Charge air pressure and temperature sensor	24	Turbocharger, bank 2
12	Throttle valve	25	To catalytic converter, bank 2
13	Blow-off valve, bank 1	26	To catalytic converter, bank 1

cardiagn.com

In principle, the energy of the escaping exhaust gases is utilized to “pre-compress” the inducted fresh air and thus introduce a greater air mass into the engine. This is only possible if the air intake ducting is “leak-free” and installed properly.

N54 Air Intake

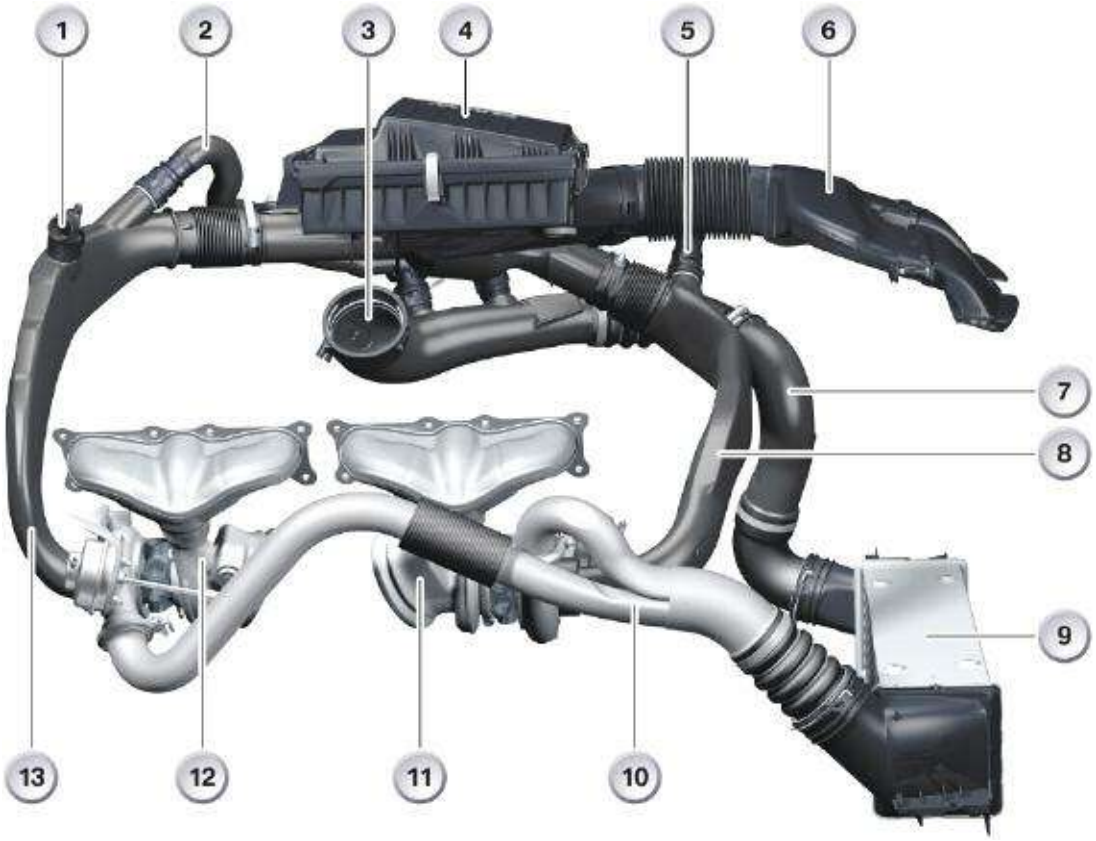

Index	Explanation	Index	Explanation
1	PTC heater, blow-by gases (in turbo mode)	8	Charge air suction line, bank 1
2	Recirculated air line, bank 2	9	Intercooler
3	Connecting flange, throttle valve	10	Charge air manifold
4	Air cleaner	11	Turbocharger, bank 1
5	Recirculated air line, bank 1	12	Turbocharger, bank 2
6	Air-intake snorkel	13	Charge air suction line, bank 2
7	Charge air pressure line		

cardiagn.com

It is important to note, when carrying out work on the air-intake ducting, it is important to ensure that the components are installed in the correct position and that all pipes are connected with tight seals.

N55 Air Intake

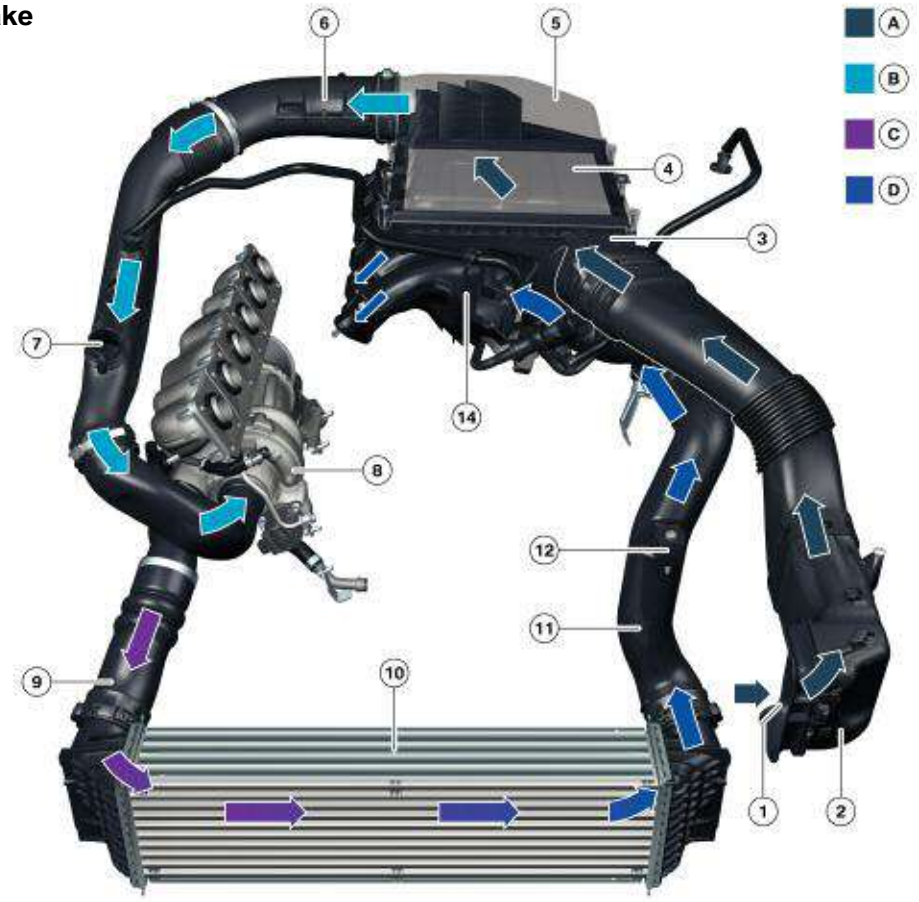

Index	Explanation	Index	Explanation	Index	Explanation
A	Unfiltered air	3	Intake silencer	9	Charge-air pipe
B	Purified air	4	Filter element	10	Intercooler
C	Heated charge air	5	Air intake silencer cover	11	Charge air pipe
D	Cooled charge air	6	Hot-film air mass meter	12	Boost pressure-temperature sensor
1	Intake snorkel	7	Crankcase ventilation connection	14	Intake air manifold
2	Unfiltered air pipe	8	Exhaust turbocharger		

A leaking system may result in erroneous boost pressure. This would be detected by the engine management system and will ultimately result in “limp-home” operation. There would also be a noticeable reduction in engine power.

For some of the duct work, there are special tools to ensure proper connections.

cardiagn.com

As mentioned earlier, the main change to the air intake and exhaust system of the **N63** engine is the interchanged positions of the intake and exhaust sides.

Consequently, the exhaust manifolds and turbochargers as well as the catalytic converters are located in the V-space of the engine.

This arrangement makes the N63 engine very compact despite the turbocharging. Another new feature is indirect charge air cooling with intercoolers mounted on the engine.

N63 exhaust manifold, turbos, HPI and related components

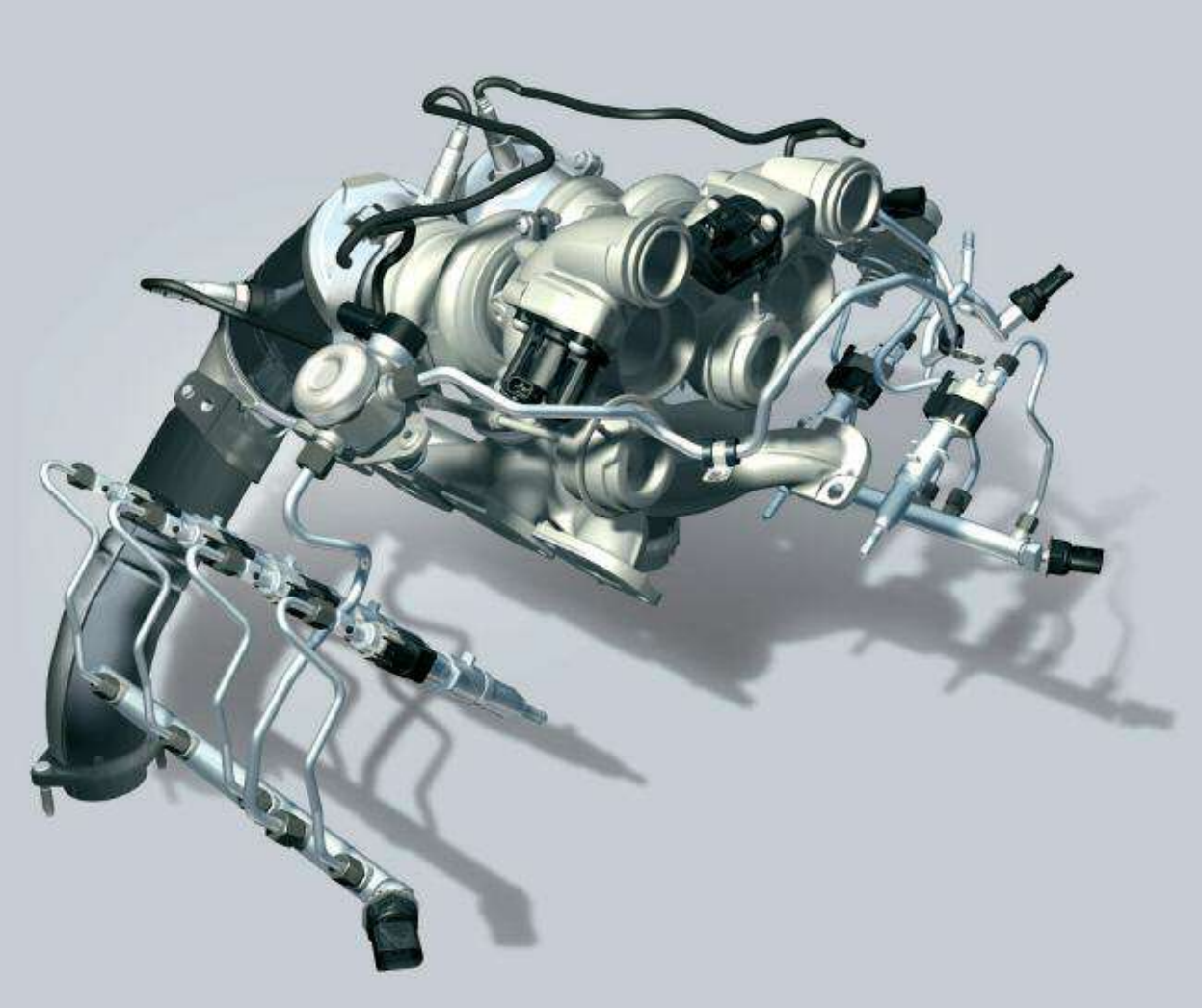

cardiagn.com

N63 forced induction overview

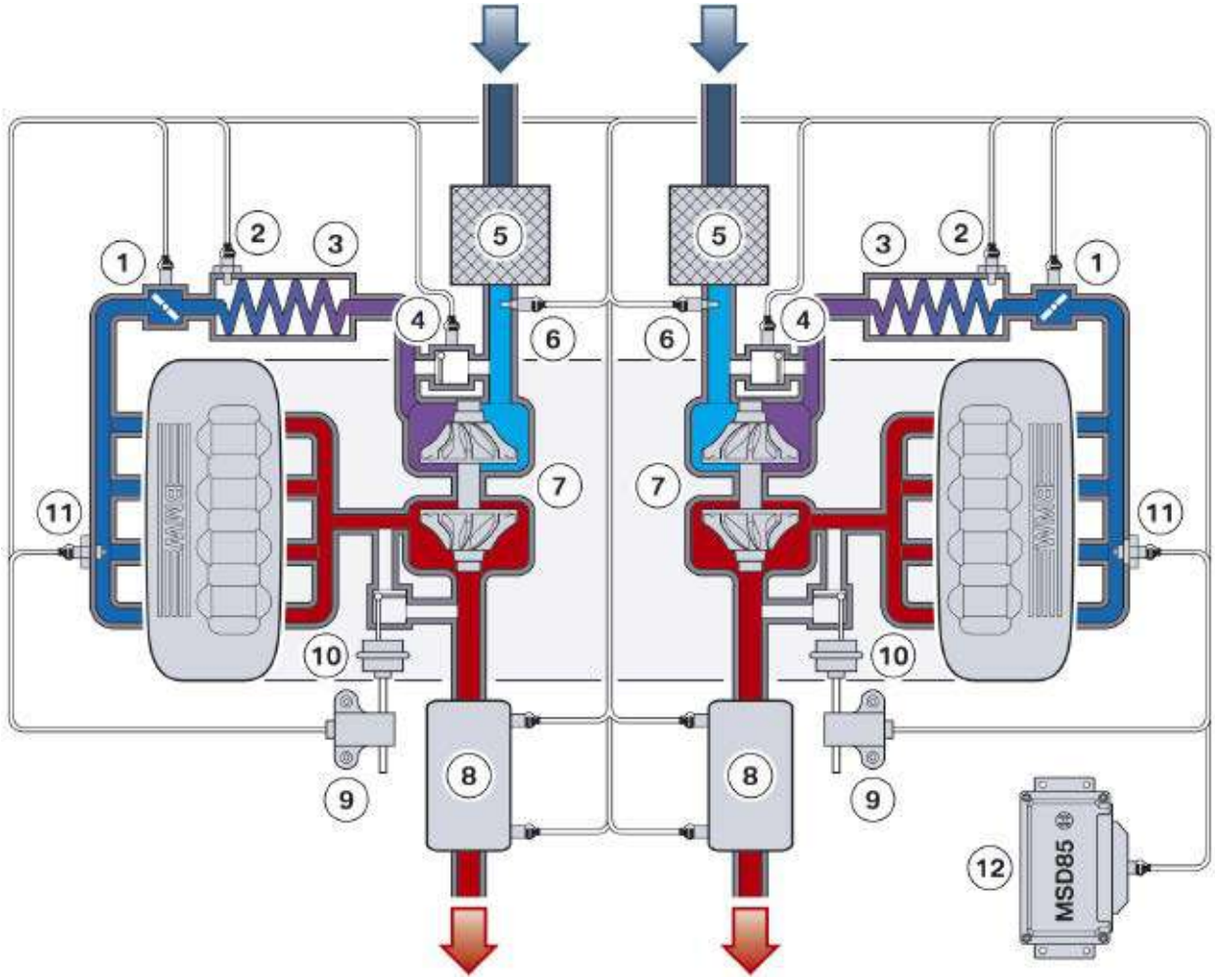

Index	Explanation	Index	Explanation
1	Throttle valve	7	Exhaust turbocharger
2	Charge air temperature and pressure sensor	8	Catalytic converter
3	Intercooler	9	Electro-pneumatic pressure converter (EPDW)
4	Diverter valve	10	Watergate valve
5	Intake silencer	11	Intake manifold pressure sensor
6	Hot-film air mass meter	12	Digital Motor Electronics (DME)

cardiagn.com

N63 Air Intake

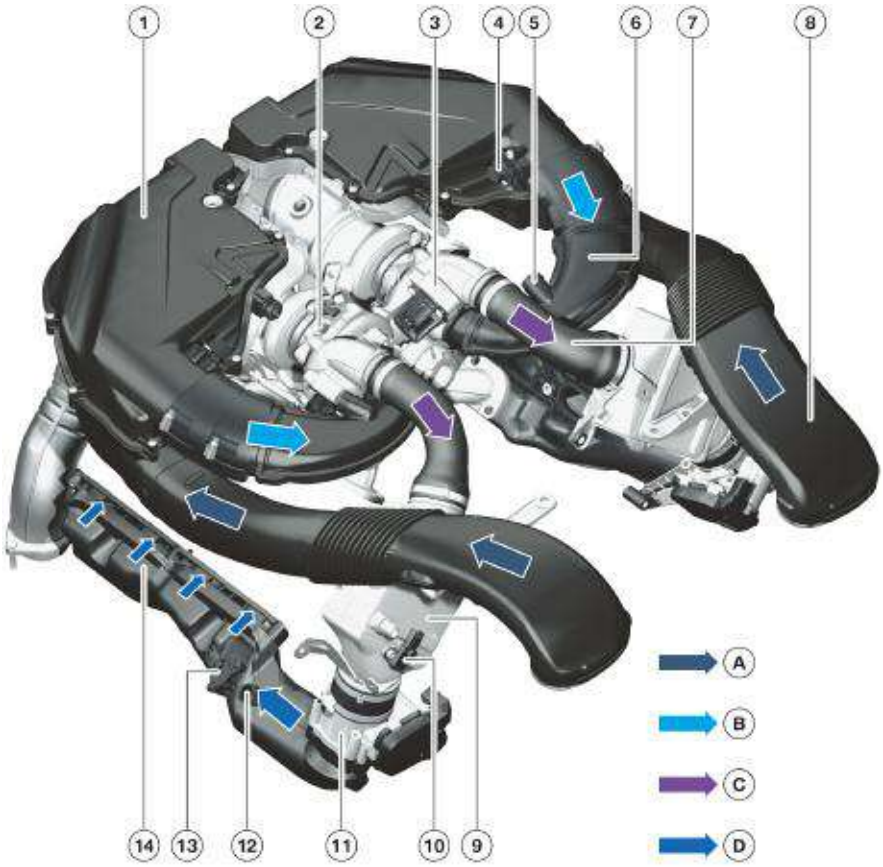

Index	Explanation	Index	Explanation
1	Intake silencer	8	Unfiltered air pipe
2	Exhaust turbocharger	9	Intercooler
3	Diverter valve	10	Charge air temperature and pressure sensor
4	Hot-film air mass meter	11	Throttle valve
5	Crankcase breather connection for turbocharged engine operation	12	Crankcase breather connection for naturally aspirated engine operation
6	Clean air pipe	13	Intake manifold pressure sensor
7	Charge air pipe	14	Intake manifold

cardiagn.com

N74 Air Intake

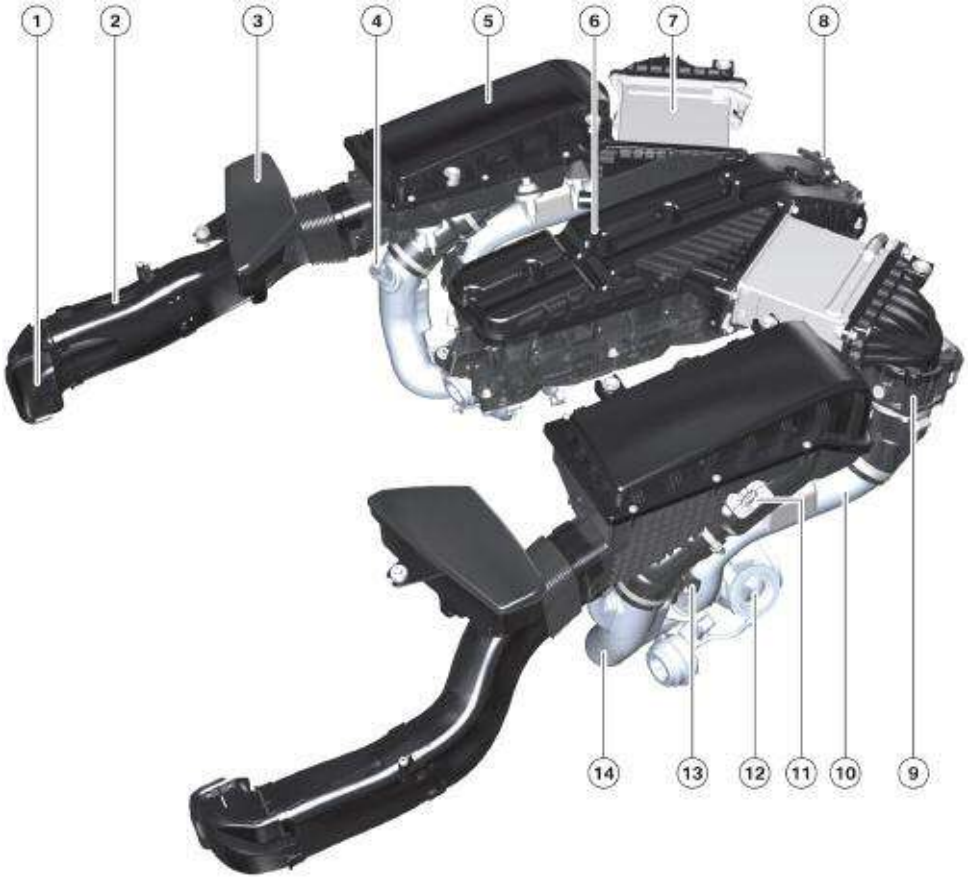

Index	Explanation	Index	Explanation
1	Unfiltered air intake	8	Charging pressure sensor
2	Unfiltered air pipe	9	Throttle valve
3	Unfiltered air resonator	10	Charge air pipe
4	Connection for crankcase ventilation, charged operation	11	Hot film air mass meter
5	Intake silencer	12	Exhaust-gas turbocharger
6	Intake manifold	13	Charge-air temperature sensor
7	Charge-air cooler	14	Purified air pipe

cardiagn.com

Boost-Pressure Control (Wastegates)

The boost pressure of the turbochargers is directly dependent on the flow of exhaust gas which reaches the turbocharger turbines. Both the velocity and the mass of the exhaust-gas flow are directly dependent on engine speed and engine load.

The engine-management system uses **wastegate valves** to control the boost pressure. These valves are operated by vacuum-pressure actuators, which are controlled via **electropneumatic pressure transducers (EPDW)** by the engine-management system.

The vacuum pressure is generated by the permanently driven vacuum pump and stored in a pressure accumulator. The system is designed to ensure that these loads and consumers do not have a negative influence on the brake-booster function.

The exhaust-gas flow can be completely or partially directed to the turbine wheel with the wastegate valves. When the boost pressure has reached its desired level, the wastegate valve begins to open and direct part of the exhaust-gas flow past the turbine wheel. This prevents the turbine from further increasing the speed of the compressor. This control option allows the system to respond to various operating situations.

N54 boost pressure control

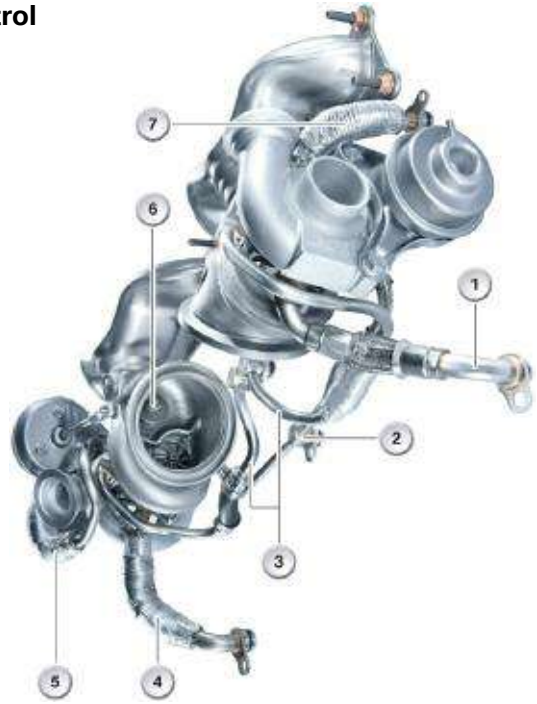

Index	Explanation	Index	Explanation
1	Oil return, bank 1	5	Coolant return, bank 2
2	Oil supply	6	Wastegate valve
3	Coolant supply	7	Coolant return, bank 1
4	Oil return, bank 2	8	

cardiagn.com

In the idle phase, the wastegate valves of both turbochargers are closed. This enables the full exhaust-gas flow available to be utilized to speed up the compressor already at these low engine speeds.

N54 Wastegate Valve.

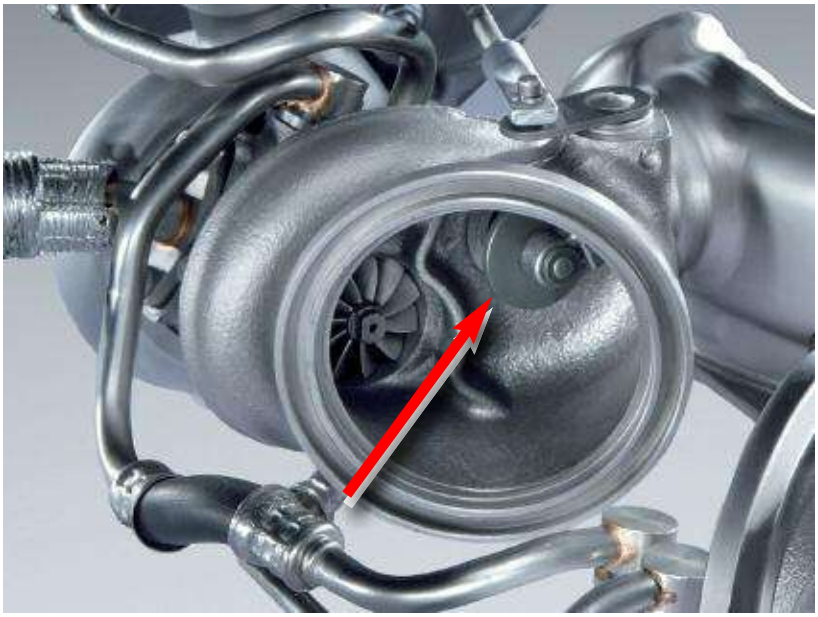

When power is then demanded from the engine, the compressor can deliver the required boost pressure without any noticeable time lag. In the full-load situation, the boost pressure is maintained at a consistently high level when the maximum permissible torque is reached by a partial opening of the wastegate valves. In this way, the compressors are only ever induced to rotate at a speed which is called for by the operating situation.

The process of the wastegate valves opening removes drive energy from the turbine such that no further increase in boost pressure occurs, which in turn improves overall fuel consumption.

The maximum overpressure (boost) of BMW engines at full-load vary depending on the engine itself as well as other contributing factors e.g. air temperature, ambient pressure, oil and coolant temperature etc.

Electropneumatic Pressure Transducers (EPDW)

The boost pressure is controlled infinitely variable by the ECM via a wastegate valve. The wastegate valve is adjusted pneumatically by a diaphragm unit. An electropneumatic pressure transducer subjects the diaphragm cam to negative pressure (vacuum).

The electropneumatic pressure transducer is connected by means of two lines to the ECM. It receives system voltage via the ECM main relay. The ECM drives the electropneumatic pressure transducer with a **pulse-width modulated** (PWM) signal.

The pulse duty factor can be between 0 – 100 %. The negative pressure (vacuum) can be controlled infinitely variable depending on the pulse duty factor.

cardiagn.com

N63 boost pressure control

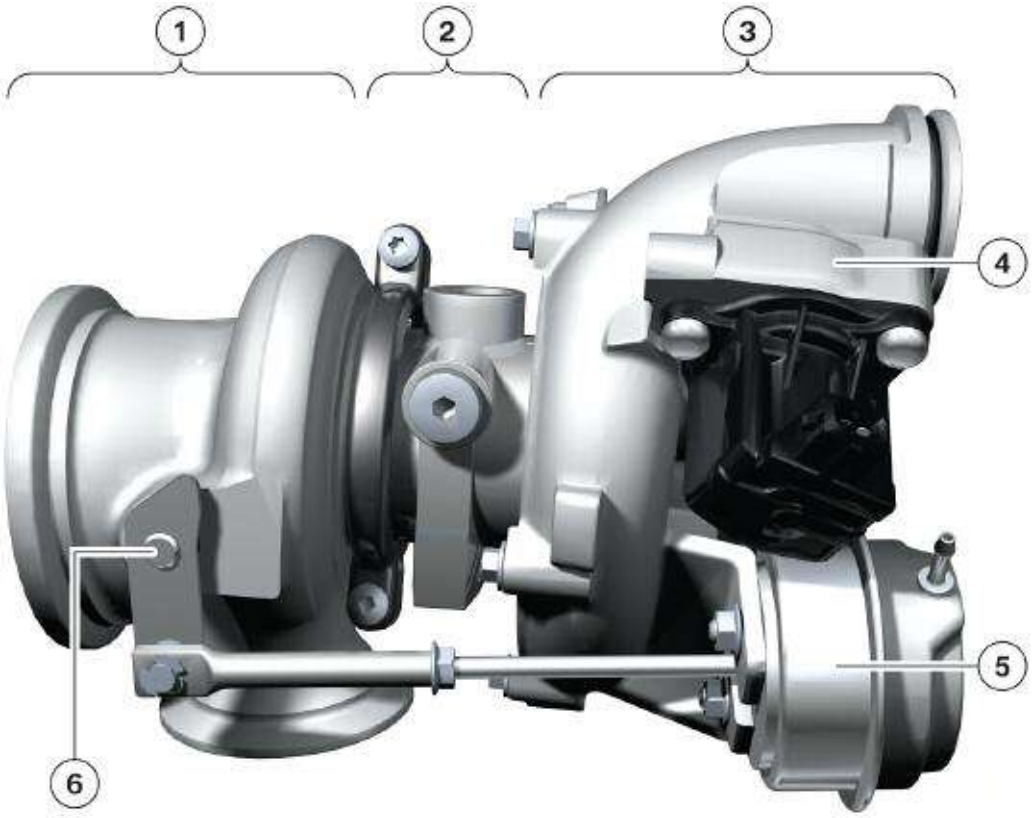

Index	Explanation	Index	Explanation
1	Turbine	4	Diverter valve
2	Bearing Pedestal	5	Vacuum unit
3	Compressor	6	Wastegate valve

cardiagn.com

N74 boost pressure control

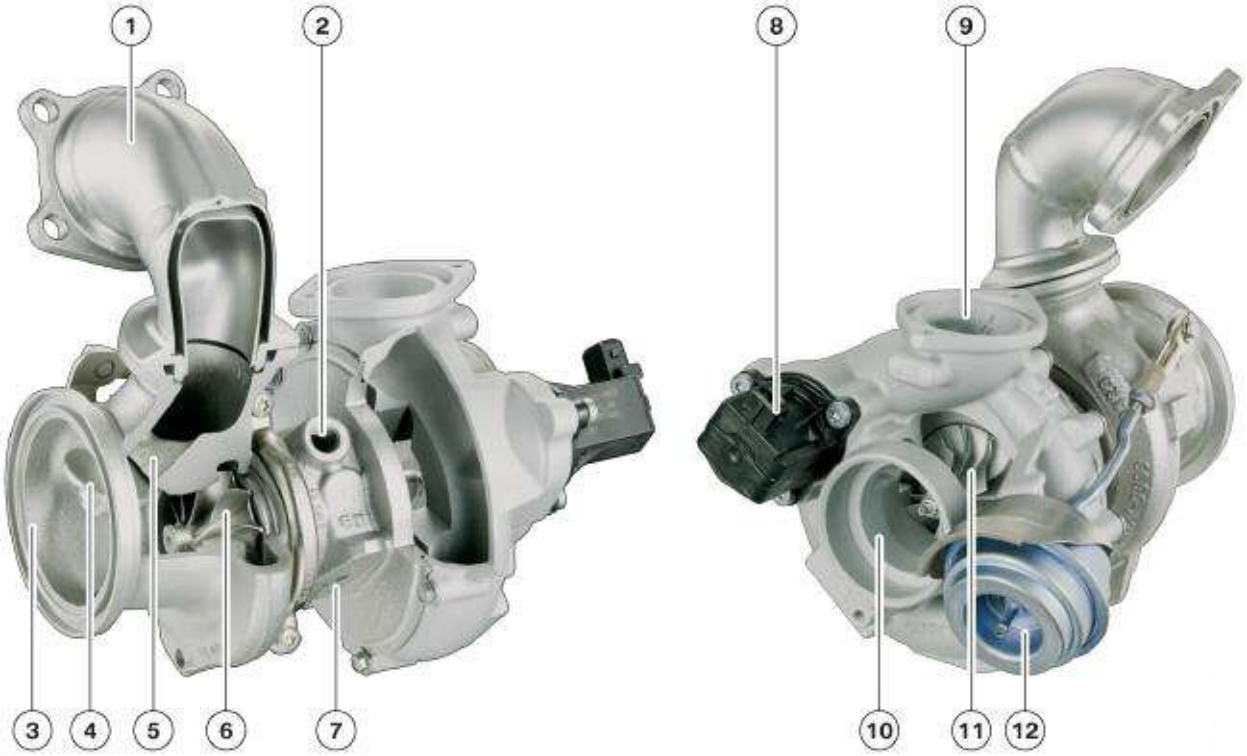

Index	Explanation
1	Connection from exhaust manifold (turbine inlet)
2	Connection for coolant line
3	Connection to catalytic converter (turbine outlet)
4	Wastegate valve
5	Wastegate duct
6	Turbine wheel
7	Connection for overflow duct
8	Diverter (blow-off) valve
9	Connection to charge air cooler (compressor outlet)
10	Connection from intake silencer (compressor inlet)
11	Impeller
12	Vacuum unit for wastegate valve activation

cardiagn.com

Blow-off Control (Diverter Valves)

The blow-off valves in BMW Turbocharged engines reduce unwanted peaks in boost pressure which can occur when the throttle valve closes quickly. They therefore have an important function with regard to engine acoustics and help to protect the turbocharger components.

A vacuum pressure is generated in the intake manifold when the throttle valve is closed at high engine speeds. This leads to a build-up of high dynamic pressure after the compressor which cannot escape because the route to the intake manifold is blocked.

This leads to a "pumping up" of the turbocharger which means that:

- a clearly noticeable, disruptive pumping noise can be heard,
- and this pumping noise is accompanied by a component-damaging load being exerted on the turbocharger, since high-frequency pressure waves exert axial load on the turbocharger bearings

In the **N54** the blow-off valves are mechanically actuated spring-loaded diaphragm valves which are activated by the intake-manifold pressure as follows:

In the event of a pressure differential before and after the throttle valve, the blow-off valves are opened by the intake-manifold pressure and the boost pressure is diverted to the intake side of the compressor. The blow-off valves open starting from a differential pressure of 0.3 bar. This process prevents the disruptive and component-damaging pumping effect from occurring.

The system design dictates that the blow-off valves are also opened during operating close to idle (pressure differential Pcharger/Psuction = 0.3 bar). However, this has no further effects on the turbocharging system.

The turbocharger is pressurized with the full exhaust-gas flow at these low speeds and already builds up a certain level of induction-air precharging in the range close to idle. If the throttle valve is opened at this point, the full boost pressure required is very quickly made available to the engine.

One of the major advantages of the vacuum pressure-actuated wastegate valves is that they can be partially opened in the mid-range in order not to allow excessive induction-air precharging to the detriment of fuel consumption. In the upper load range, they assume the required control position corresponding to the necessary boost pressure.

cardiagn.com

N54 Diverter (Blow-off) valves

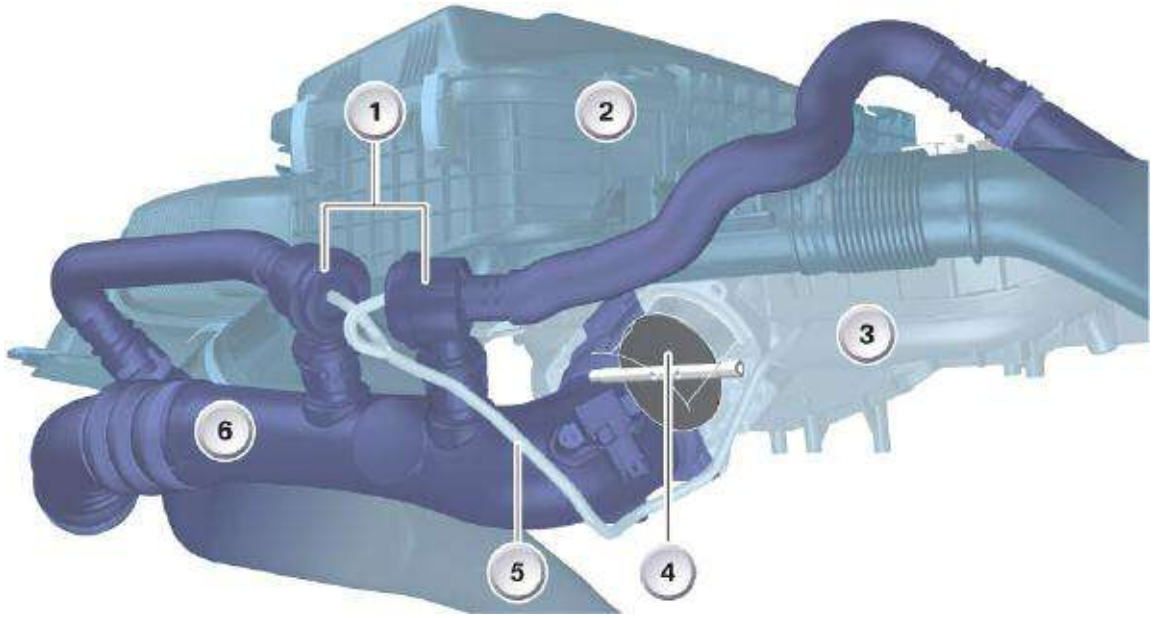

Index	Explanation	Index	Explanation
1	Blow-off valves	4	Throttle valve
2	Air cleaner (ambient pressure)	5	Control line, blow-off valves
3	Intake manifold	6	Charge air pressure line

Electric Diverter valve

On the **N55** the basic function of the diverter valve remains the same. The difference compared to the N54 engine is that the diverter valve is not operated pneumatically. **The diverter valve(s) on the N55, N63 and N74 engines is an electric actuator that is controlled directly by the DME.** The number of components has been greatly reduced by positioning the diverter valve on the turbocharger compressor housing.

The diverter valve is designed to release unwanted pressure in the intake by connecting the pressure side of the induction system to the inlet side under deceleration. The undesirable peaks in the boost pressure that can occur when the throttle valve is quickly closed are reduced. This means the diverter valve plays an important role in terms of the engine acoustics while protecting the components of the turbocharger.

cardiagn.com

N63 Diverter valve operation

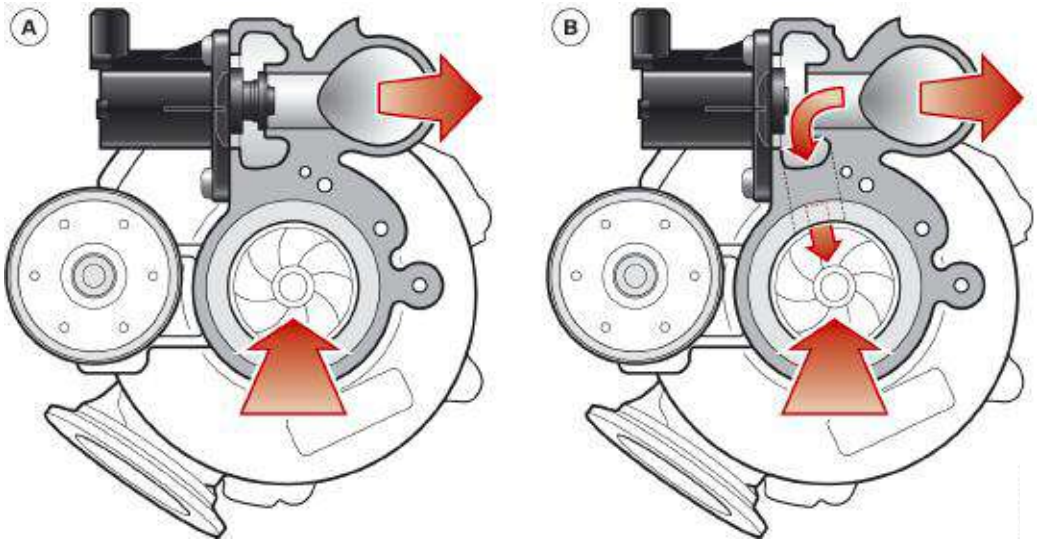

Index	Explanation	Index	Explanation
1	Diverter valve, closed	2	Diverter valve, open

As mentioned earlier, the diverter valves in the **N63** engine also reduces unwanted peaks in boost pressure which can occur when the throttle valve closes quickly. As with the N54, a vacuum is generated in the intake manifold when the throttle valve is closed at high engine speeds. This leads to a build-up of high dynamic pressure after the compressor which cannot escape because the route to the intake manifold is blocked.

On the **N74,** the basic function of the diverter valve remains the same. Once more the difference compared to the N54 engine is that the diverter valve is not operated pneumatically. The diverter valve on the N74 engine is an electric actuator that is controlled directly by the ECM.

On N55 and N74 the diverter valve is located on the compressor housing.

cardiagn.com

Load Control

Load control on turbocharged engines is effected by means of the **throttle valve** and the **wastegate valves.**

The throttle valve is the primary component in this process. The wastegate valves are actuated to bring about a fine tuning of the boost pressure. At full load the throttle valve is completely open and load control is undertaken by the wastegate valves.

The load-control graphic shows that the wastegate valves are integrated in load control in all operating situations of the N54 engine on the basis of map control.

Load Control Overview N54

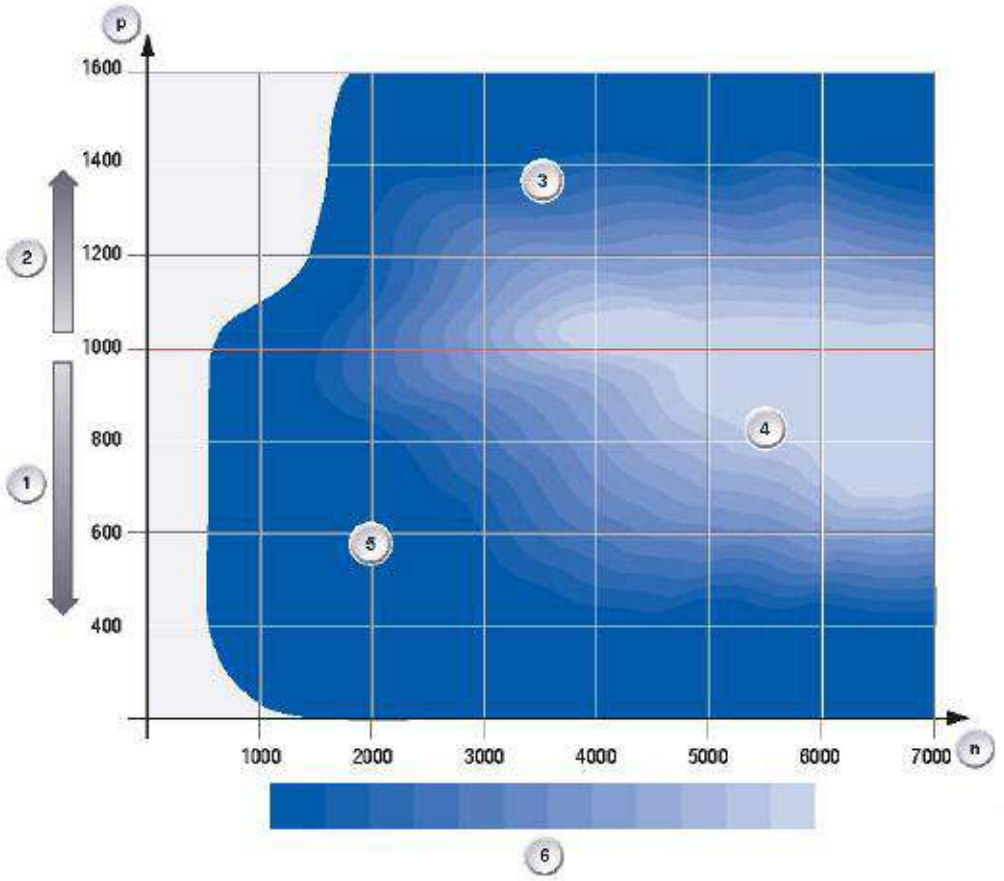

The Load Control Graphic on the N55 is similar to that of the N54.

Index	Explanation	Index	Explanation
n	Engine speed in RPM	3	Wastegate controlled as a function of boost pressure
p	Absolute pressure in the intake in millibar	4	Wastegate partially opened
1	Naturally aspirated engine operation	5	Wastegate closed
2	Turbocharged operation	6	Dark = Wastegate fully closed Light = Wastegate fully open

cardiagn.com

The following load control graphic shows that the wastegate valves are integrated in load control in all operating situations of the **N63** engine on the basis of characteristic map control.

Load Control Overview N63

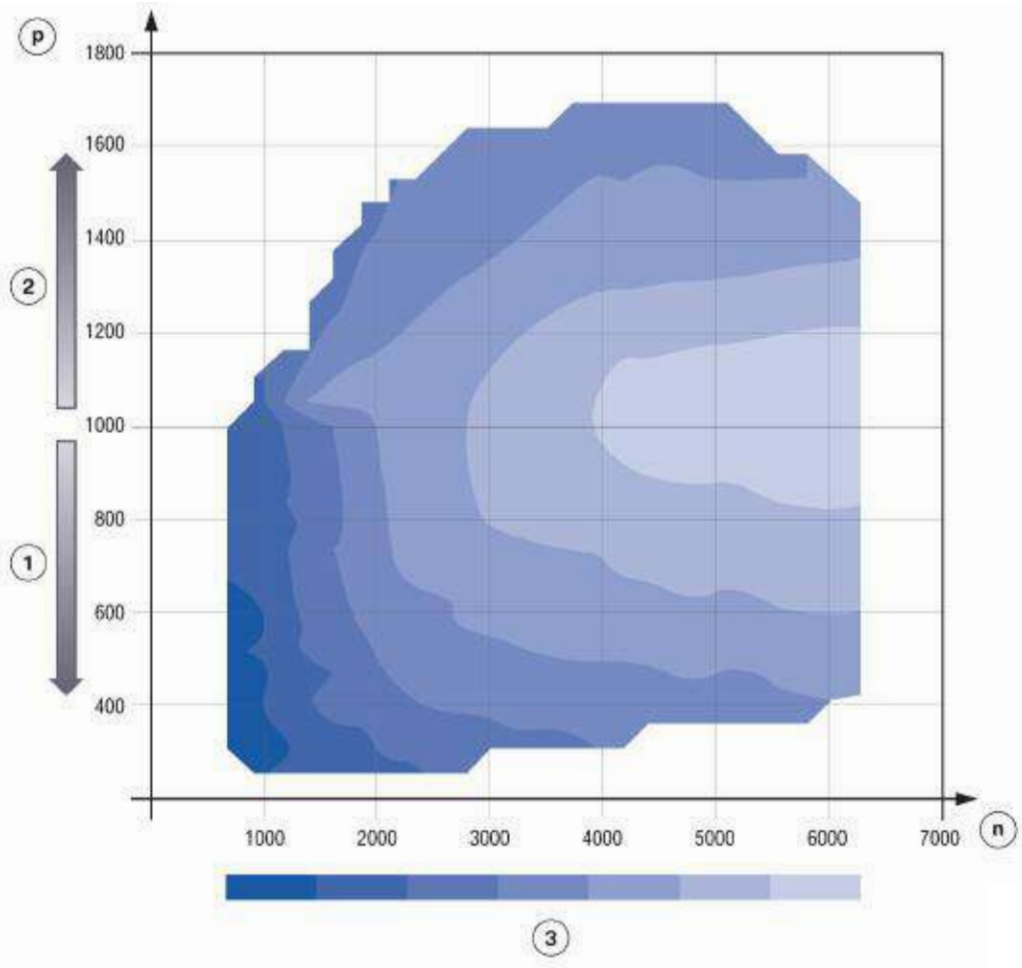

The Load Control Graphic on the N74 is similar to that of the N63.

Index	Explanation	Index	Explanation
n	Engine speed in RPM	2	Turbocharged operation
p	Absolute pressure in intake manifold (mbar)	3	Dark = wastegate closed Light = wastegate open
1	Naturally aspirated operation		

cardiagn.com

Controlled Variables

The following variables, among others, influence control of the engine's boost pressure:

- Intake-air temperature
- Engine speed
- Throttle-valve position
- Ambient pressure
- Intake-manifold pressure
- Pressure before the throttle valve (reference variable)

The electropneumatic pressure transducers are activated by the engine control unit on the basis of these variables. The result of this activation can be checked from the boost pressure achieved, which is measured before the throttle valve.

There follows a comparison of the boost pressure achieved with the setpoint data from the program map, which can if necessary give rise to an activation correction. The system therefore controls and monitors itself during operation.

cardiagn.com

Intake Boost Pressure and Temperature Sensor

The combined intake temperature and boost pressure sensor is used on BMW Turbocharged engines. It is located in the air channel downstream of the intercooler and supplies the ECM control unit with information on the temperature and pressure of the charge air (boost pressure) **before the throttle valve** (absolute).

The sensor serves the purpose of controlling the boost pressure. The ECM control unit uses the signal from the intake manifold pressure sensor to adjust the position of the throttle valve.

Boost-pressure sensor

The sensor receives a 5V voltage and ground supply from the ECM. The information relating to the boost pressure is sent via a signal line to the ECM.

The useful signal for the boost pressure fluctuates depending on the pressure. The measuring range from approx. 0.5 to 4.5 V corresponds to a boost pressure from 20 kPa (0.2 bar) to 250 kPa (2.5 bar).

Intake temperature sensor

The ECM supplies ground to the intake temperature sensor. A further connection is routed to a voltage divider circuit in the ECM.

The intake temperature sensor contains a temperature-dependent resistor that protrudes into the flow of intake air and assumes the temperature of the intake air.

The resistor has a negative temperature coefficient (NTC). This means that the resistance decreases as temperature increases. The resistor is part of a voltage divider circuit that receives a 5V voltage from the ECM. The electrical voltage at the resistor is dependent on the air temperature. There is a table stored in the ECM that specifies the corresponding temperature to each voltage value and therefore compensates the non-linear correlation between voltage and temperature.

cardiagn.com

Intake-manifold Pressure Sensor
The intake manifold pressure sensor is used only on BMW Turbocharged engines. It is located on the intake manifold. It measures the pressure (absolute) in the intake manifold **after the throttle valve**.

The ECM uses the signal from the intake manifold pressure sensor to calculate the mass of intake air. The pressure also serves as a substitute variable for the load signal.

The ECM supplies the sensor with a 5V voltage and with ground. The information is sent to the ECM via a signal line. The evaluation signal fluctuates depending on the pressure. The measuring range from approx. 0.5 to 4.5 V corresponds to an air pressure from 20 kPa (0.2 bar) to 250 kPa (2.5 bar).

cardiagn.com

Charge Air Cooling (Intercoolers)

N54/N55

Cooling the charge air in BMW Turbocharged engines serve to increase power output as well as reduce fuel consumption. The charge air heated in the turbocharger by its component temperature and by compression is cooled in the intercooler by up to 80°C.

This increases the density of the charge air, which in turn improves the charge in the combustion chamber. This results in a lower level of required boost pressure. The risk of knock is also reduced and the engine operates with improved efficiency.

N54 Intercooler flow

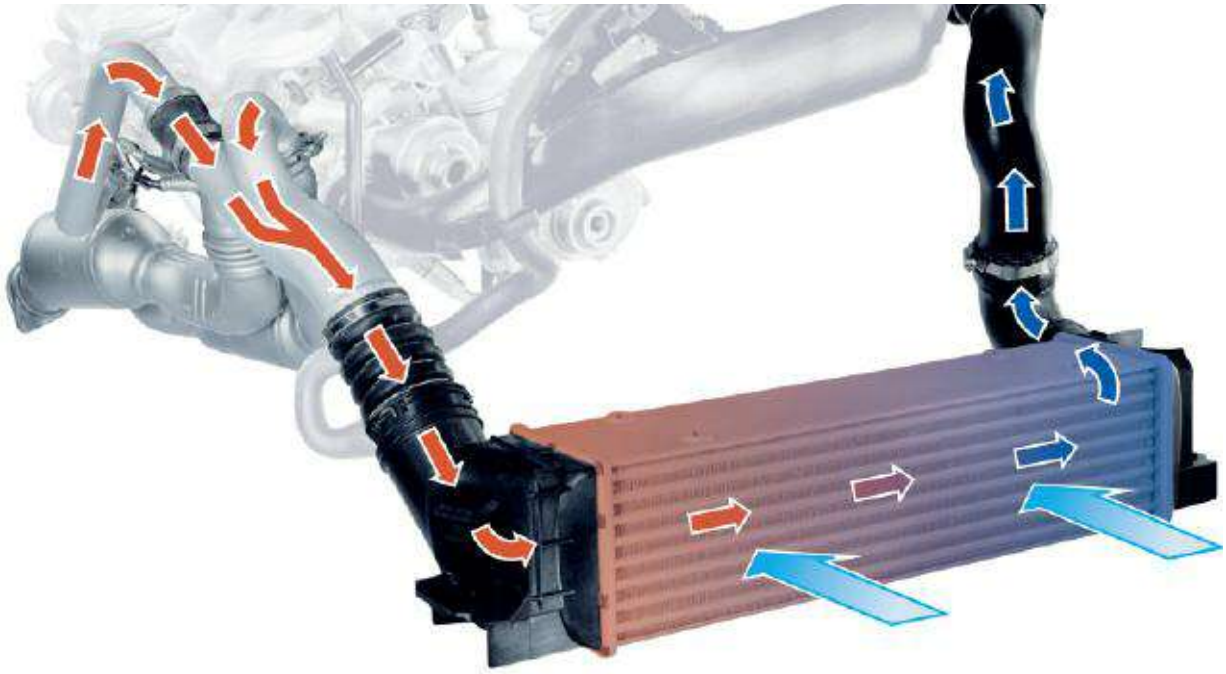

The N55 Intercooler flow is similar to that of the N54.

cardiagn.com

N63/N74

Indirect charge air cooling is used for the first time on the **N63** engine. The charge air is not routed directly to an air-to-air heat exchanger.

The charge air is cooled by means of an air-to-coolant heat exchanger. The N63 engine therefore features a separate self contained low-temperature coolant circuit.

Indirect charge air cooling has the advantage of requiring little space as the system can be mounted directly on the engine. Due to the near-engine installation position, the distinctly shorter pipe length required for charge air routing also have a positive effect.

In this way, pressure loss has been substantially reduced, thus improving power yield and engine response.

N63 Indirect Charge Air Cooling Flow

Index	Explanation	Index	Explanation
A	Hot charge air	D	Hot coolant
B	Cooled charge air	1	Intercooler
C	Cooled coolant	2	Charge air pressure/temperature sensor

cardiagn.com

N63 Cooling Circuit for Charge Air Cooling

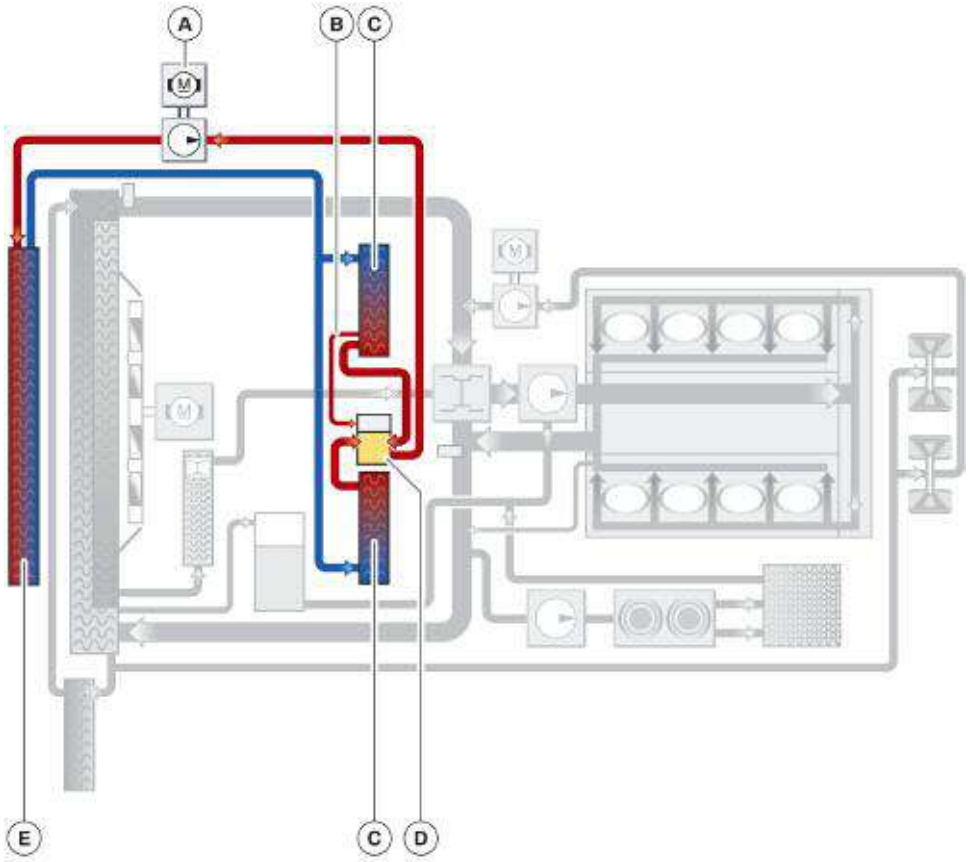

Index	Explanation	Index	Explanation
A	Electric coolant pump for charge air cooling	D	Expansion tank for charge air cooling
B	Vent line	E	Radiator for charge air cooling
C	Intercooler		

In the **N63** engine heat is taken from the charge air by means of an **air-to-coolant heat exchanger**. This heat is then given off via a coolant-to-air heat exchanger into the ambient air. For this purpose, the charge air cooling system has its own low temperature cooling circuit with a **dedicated electric water pump**, which is independent of the engine cooling circuit.

The intercoolers in the N63 are installed on the end faces of the cylinder heads. They operate in accordance with the counterflow principle and cool the charge air by up to 80°C.

cardiagn.com

N74 Cooling Circuit for Charge Air Cooling

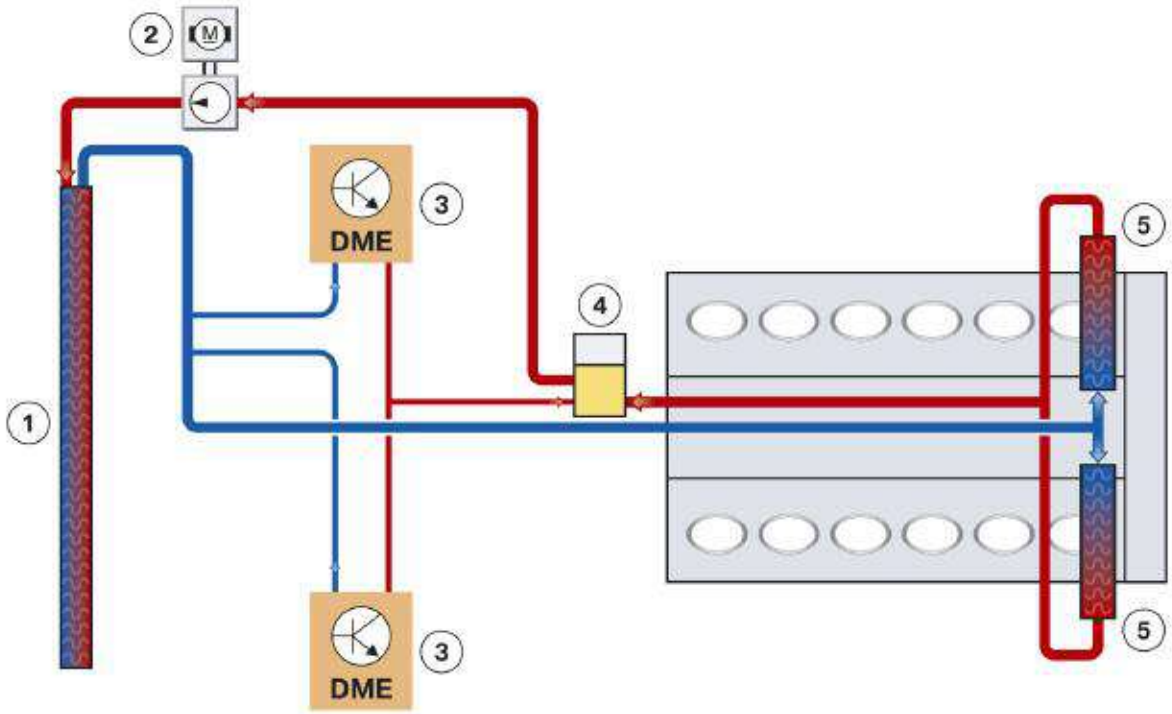

Index	Explanation
1	Radiator for charge air cooling
2	Electric coolant pump for charge air cooling
3	Engine control unit
4	Expansion tank
5	Charge-air cooler

The use of **indirect charge air cooling** has also been adopted for the **N74** engine. The heat is extracted from the charge air by means of an air to coolant heat exchanger. This heat is then released to the ambient air across a coolant to air heat exchanger. To achieve this, the charge air cooling has its own low-temperature cooling circuit with a **dedicated electric water pump**, just as in the N63.

A **50W pump** is used to operate the coolant circuit for charge air coolant on the N63 and N74 engines. This pump does not run automatically when the engine is turned on.

Pump actuation on the N63 and N74 depend on the following values:

- **Outside temperature.**
- **Difference between charge air temperature and outside temperature.**

cardiagn.com

NOTES PAGE

cardiagn.com

Turbocharger Diagnosis

Golden Rules

It is important to focus on the causes rather than the effects.

With regard to the diagnosis and subsequent repair of turbocharging components, it is important to ensure that they are also actually identified as defective components with the diagnostic technology available.

It is always vital to ensure that the cause of the fault is determined and rectified and that if necessary work is not carried out on symptoms of fault consequences.
Thus, for instance, a leaking flange on the intercooler can have far-reaching consequences.

When diagnosing a turbo complaint always follow the three golden rules of procedure:

1. Do not rashly trace loss of power and engine malfunctions back to the turbocharger. To avoid the replacement of turbochargers which are in perfect working order, the following should be observed:

   When blue smoke emerges from the exhaust system, check whether the air cleaner is contaminated or the engine is consuming too much oil because of wear. Or, if the crankcase ventilation system is faulty. Only then resort to checking the turbocharger. If the turbocharger is running too loud, inspect all the connections on the turbocharger pressure side. If black smoke or a loss of power is detected, in this case too check the engine and the connecting pipes first.

2. Main causes of turbocharger damage:

   - Insufficient lubrication and consequently bearing failure. Compressor and turbine wheels will grind in the housings, the seals will be damaged and the shaft may also shear off.
   - Foreign bodies damage the turbine and impeller. The resulting imbalance will reduce efficiency and may cause rotor damage.
   - Contaminated oil causes scoring on shaft journals and bearings. Oilways and seals will become clogged and cause oil leakage. Elements entering the turbocharger system from the outside such as sand, dirt, screws and the like will be trapped by a filter before the compressor.
   - Service the filters at regular intervals (service intervals). Make sure to keep the clean-air area of the air cleaner and the air ducting to the compressors clean and free from all types of debris.

cardiagn.com

3. Do not make any alterations to the turbocharger: Never attempt to alter the boost-pressure control linkage. The turbocharger has been optimally configured at the factory. If the turbocharger operates at higher boost pressures than permitted by the engine manufacturer, the engine may run hot and pistons, cylinder heads or engine bearings may fail, or the safety function of the engine electronics may respond and activate the engine's limp-home program.

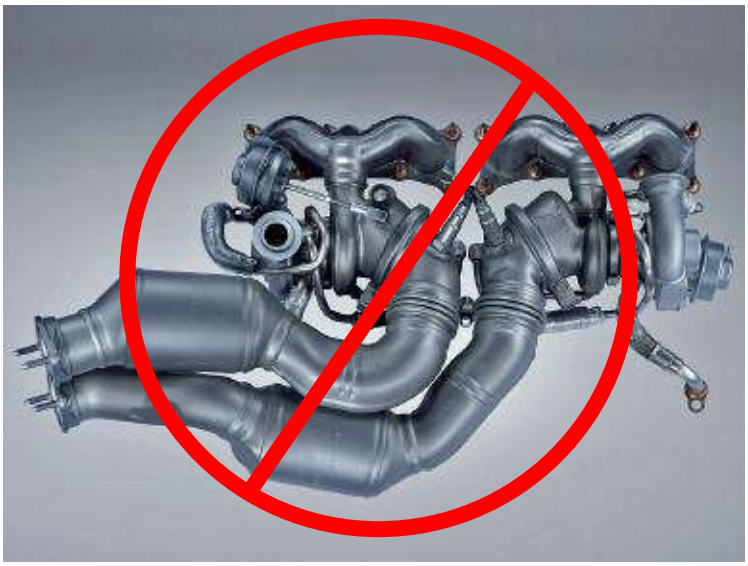

No modifications to the turbochargers are permitted.

cardiagn.com

Controlled Variables

The following variables, among others, influence control of the engine's boost pressure:

- Intake-air temperature
- Engine speed
- Throttle-valve position
- Ambient pressure
- Intake-manifold pressure
- Pressure before the throttle valve (reference variable)

The electropneumatic pressure transducers are activated by the engine control unit on the basis of these variables. The result of this activation can be checked from the boost pressure achieved, which is measured before the throttle valve.

There follows a comparison of the boost pressure achieved with the setpoint data from the program map, which can if necessary give rise to an activation correction.
The system therefore controls and monitors itself during operation.

Limp-home Mode

In the event during operation of malfunctions, implausible values or failure of any of the sensors involved in turbocharger control, activation of the wastegate valves is shut down and the valve flaps are thus fully opened. Turbocharging ceases at this point.

The list below sets out those components or functional groups in which a failure, a malfunction or implausible values result in boost-pressure control being deactivated. The driver is alerted to a fault of this type via an EML indication.

- **High-pressure fuel system**
- **Inlet VANOS**
- **Exhaust VANOS**
- **Crankshaft sensor**
- **Camshaft sensor**
- **Boost-pressure sensor**
- **Knock sensors**
- **Intake-air temperature sensor**

cardiagn.com

Turbocharger System Check

1. Visual inspections

Visual inspections of all lines, hoses, connections and cables are intended to help locate obvious defects quickly.

Connection plan for **partial-vacuum** activation see: Repair Instructions (REP)

- 11 Engine
- 00 Engine in general

2. Active diagnosis of the turbochargers

The active diagnosis is a DME function. The function runs within of a temperature window of 80 - 95 °C. To decouple the two turbochargers, the connecting line (low pressure hose) between the two electropneumatic pressure converters (EPDWs) must be disconnected (air-tight) by means of a special tool (see illustration). The function generates an artificial load. Only then is diagnosis in the charged mode possible. However, the engine generates a great amount of heat here, which is why the coolant pump and electric fan are activated. These components react sluggishly, which is why the function possibly aborts in the vicinity of the two limits. The function increases the speed to generate a load. Subsequently, the DME alternately activates the wastegates of the turbochargers. In the process, the courses of pressure are monitored by the pressure sensors. In accordance with the courses of pressure of the two decoupled turbochargers, the DME evaluates the behavior of the turbocharger system.

At the end of the function, a message regarding the status of the charge is displayed. If the turbocharger system is judged to be “OK” and there is only a customer complaint, further troubleshooting is unnecessary!

cardiagn.com

3. Check the exhaust flap
The back pressure generated in the exhaust system means that the function of the exhaust flap affects the charge in various operating points. A permanently closed exhaust flap can lead to charge faults!

The exhaust flap is vacuum-controlled. A disconnected vacuum hose can draw in particles (dust, salt water, etc.) and deliver then up to the vacuum pump. This can damage the vacuum pump.

4. Check the electropneumatic pressure converters (EPDW)
The electropneumatic pressure converters are activated individual in such a way that -450 hPa is fed to the wastegates. Some of the adjustment of the wastegates can be observed from above, but with some engines like the N54 it is better to observe from below (underbody panels removed).

During activation, if necessary, the partial vacuum can be checked using a pressure gauge. If the vacuum hose is disconnected, there will be a delay in the vacuum build-up!

5. Check the intake system for leak-tightness with the diagnosis device
To find leaks, be sure to use diagnosis device **81 29 0 426 464**. In this context, consult repair instruction **REP 11 61 730 BMW leak test for intake system!** The seal plugs must close off the intake system and make it air-tight.

- Small leakages can be found because of hissing noises.
- As a rule, larger leakages are visible or the pressure cannot be built up with the diagnosis device.

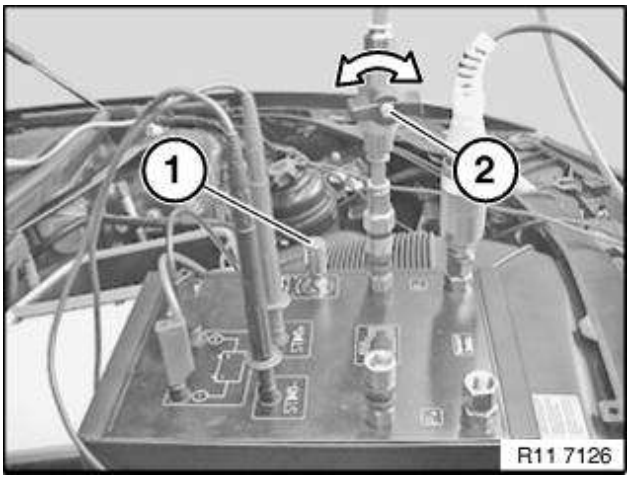

cardiagn.com

6. Check the wastegate and blow off valve (BOV/Diverter Valve)
If a wastegate or blow off valve does not close, i.e. jams open, it is usually not possible to build up adequate charge-air pressure. Wastegates that jam closed might generate overload fault; blow off valves might produce noises (vibrating).

The wastegates are closed by partial vacuum, -300 hPa must be sufficient for this operation. If the wastegates are only closed at lower pressures, they are difficult to move. With further wear, the flaps no longer close completely or jam in their seats.

The blow off valves are force-opened by partial vacuum from the intake pipe after the throttle valve.

7. Check the catalytic converter and turbo module
Catalytic converters can influence the charge due to changed exhaust-gas back-pressure. As a rule, this can be seen by traces of melting or burns in the honeycomb structure. Smeared colors on the outside of the catalytic converter can also indicate damage of this nature.

As a rule, damage to the turbocharger is visible, e.g. broken turbine wheel, jamming turbine wheel shaft or oil spillage. In the case of oil spillage, the catalytic converter must be checked for consequential damage without fail.

Intake-air Temperature of Charge-air Pressure Sensor

The charge-air pressure sensor registers the absolute pressure (charge-air pressure and atmospheric pressure together) in the intake system and serves as a measured value generator or charge-air pressure control.

The intake air temperature pressure sensor is attached to the charge air pipe. This combined sensor delivers the following information to the engine management system:

- Temperature of the charge air
- Charge-air pressure

The purpose of the charging pressure sensor is charging pressure control. The engine control unit also uses the signal of the intake-manifold pressure sensor to calibrate the position of the throttle valve.

Functional Description

Boost pressure sensor
Expansion measurement strips are used to detect the pressure. The pressure applied deforms a steel membrane in the sensor that is fitted with expansion measurement strips. The changes in resistance in the expansion measurement strips are detected electronically by a measurement bridge and evaluated. The measured voltage is then included as an actual value in the charge-air-pressure control.

cardiagn.com

Intake-air temperature sensor

A temperature-dependent electrical resistor is used for temperature detection. The circuit contains a power

diplexer where the resistance can be measured depending on the temperature. A temperature is converted using a characteristic curve specific to the sensor. An NTC resistor is installed in the intake air temperature sensor; its resistance value falls as the temperature rises. The resistance changes depending on the temperature.

Characteristic Curve and Nominal Values

The charge-air pressure information is sent to the engine management system across a signal line. The signal for the charge-air pressure, which can be evaluated, fluctuates depending on the pressure. The measuring range of approx. 0.5 to 4.5 Volts corresponds to a charge-air pressure of 20 kPa (0.2 bar) to 250 kPa (2.5 bar).

The resistance of the intake air temperature sensor changes depending on the temperature.

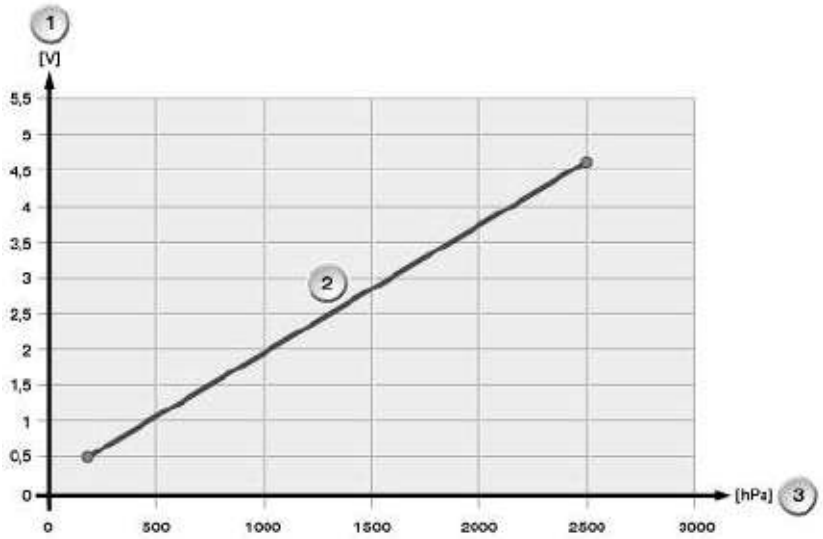

Index	Explanation	Index	Explanation
1	Voltage	3	Pressure
2	Charge-air pressure characteristic curve		

cardiagn.com

Observe the following nominal values for the intake air temperature pressure sensor:

Variable	Value
Voltage range for charge-air pressure sensor	0.5 to 4.5 Volts
Measuring range for charge-air pressure	0.2 to 2.5 bar
Intake air temperature sensor accuracy	+/- 1°C
Maximum output current	10mA
Temperature range	-40 °C to 130 °C

Failure of the Component

If the charge-air pressure sensor fails, the following behavior is to be expected:

- Fault code memory entry in the engine control unit
- Emergency operation with substitute value

cardiagn.com

Intake Air Temperature Sensor (NOT Pressure)

Intake Air-Intake temperature sensor [C] ADD [F]		RESISTANCE [Ω]
[°C]	[°F]	
-30	-22	23500-27500
-20	-4	14000-16000
-10	14	8500-10000
0	32	5000-6100
10	50	3500-3900
20	68	2300-2600
25	77	1900-2100
30	86	1600-1750
40	104	1100-1200
50	122	750-850
60	140	550-600
70	158	410-440
80	176	305-325
90	194	230-245
100	212	180-190

cardiagn.com

NOTES PAGE

cardiagn.com