LIGHTING SYSTEM

PRECAUTION

1. PRECAUTION FOR DISCONNECTING BATTERY CABLE

NOTICE:

FOR INITIALIZATION:

When disconnecting the cable from the negative (-) battery terminal, initialize the following system(s) after the cable is reconnected.

System Name	See procedure
Power Window Control System	IN-32

NOTICE:

FOR HYBRID SYSTEM ACTIVATION:

- **When the warning light is illuminated or the battery has been disconnected and reconnected, pressing the power switch may not start the system on the first try. If so, press the power switch again.**
- **With the power switch's power mode changed to ON (IG), disconnect the battery. If the key is not in the key slot during reconnection, DTC B2799 may be output.**

2. PRECAUTION OF HEADLIGHT BULB REPLACEMENT (w/o HID)

(a) If even a thin film of oil is left on the surface of the halogen light, its service life will be shortened because the light will burn at a higher temperature.

(b) Handle any halogen light with great care. Dropping, hitting or damaging the bulb in any way may result in it exploding and shattering because the internal pressure is high.

(c) Always prepare a new bulb for immediate replacement. While replacing the bulb, the lens may attract dust and moisture if removed from the vehicle for too long.

(d) Always use a bulb of the same wattage for replacement.

(e) Firmly reinstall the socket after bulb replacement. The lens may become cloudy or the light cavity may fill with water through the gaps around the socket.

3. PRECAUTION FOR HEADLIGHT BULB REPLACEMENT (w/ HID)

(a) When any defects such as deformation, cracks, dents, chipping, etc. are identified on the HID headlight (especially, on the light control ECU), replace it with a new one.

(b) Even if the operation seems to be normal, the fail-safe function may be defective.

(c) Be careful not to scratch or drop bulbs of the HID headlight and halogen bulbs (for high beam headlights and fog lights) as they have pressurized gas inside and can be easily broken.
(d) Touching the high voltage socket of the HID headlight with the headlight dimmer switch on could generate a momentary voltage of 20,000 V and lead to a serious injury.
(e) Never connect a tester to the high voltage socket of the HID headlight for measurement, as this may lead to a serious injury because of high voltage.
(f) When servicing the HID headlight, keep it away from water, turn off the light control switch, and disconnect the battery terminal and the connector of the light control ECU in advance to avoid electric shock.
(g) When operating the HID headlight, operate it after assembly is completed and never turn on the lights without a bulb installed.
(h) Do not turn on the HID headlight using a power source other than the vehicle's.

PARTS LOCATION

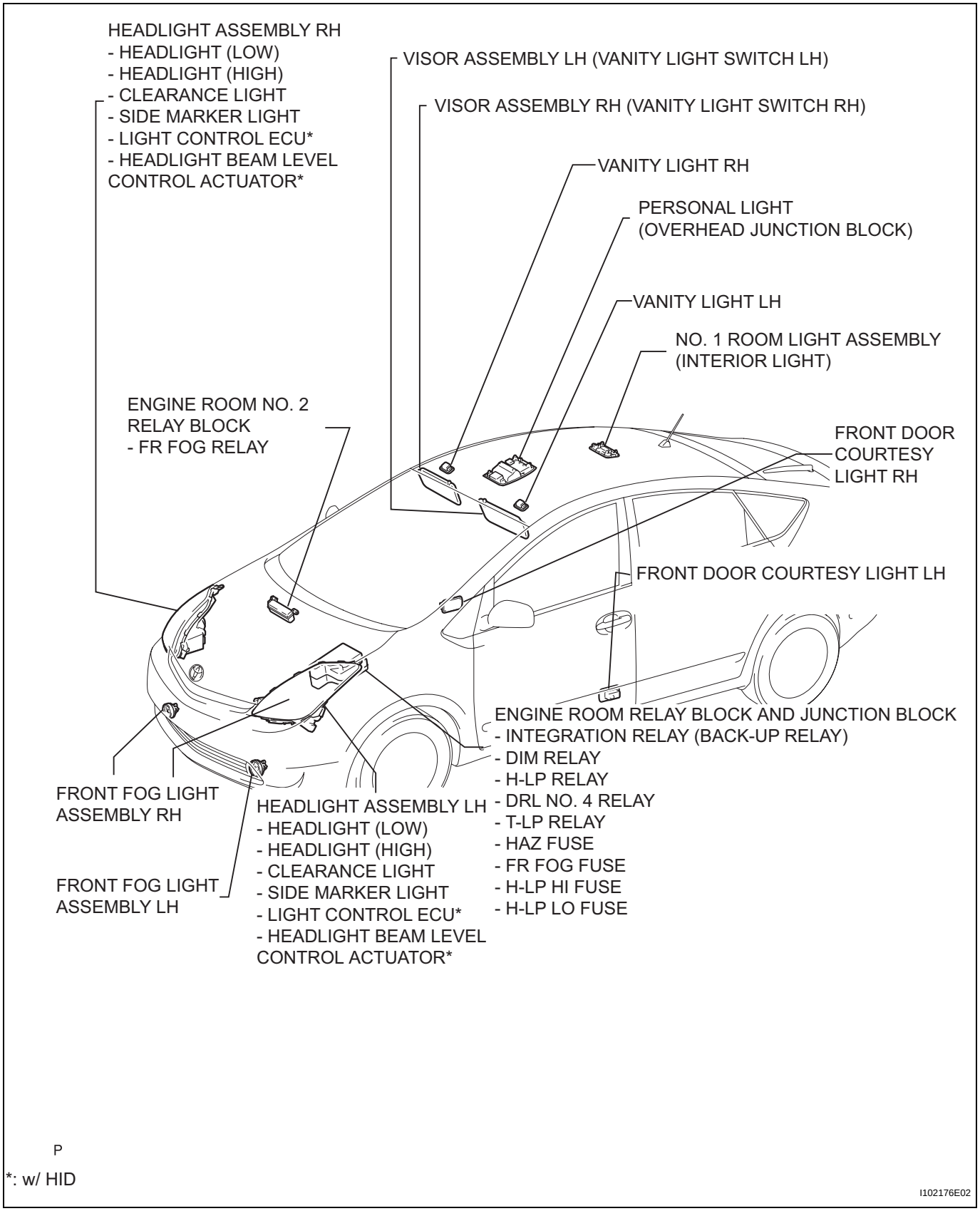

LI

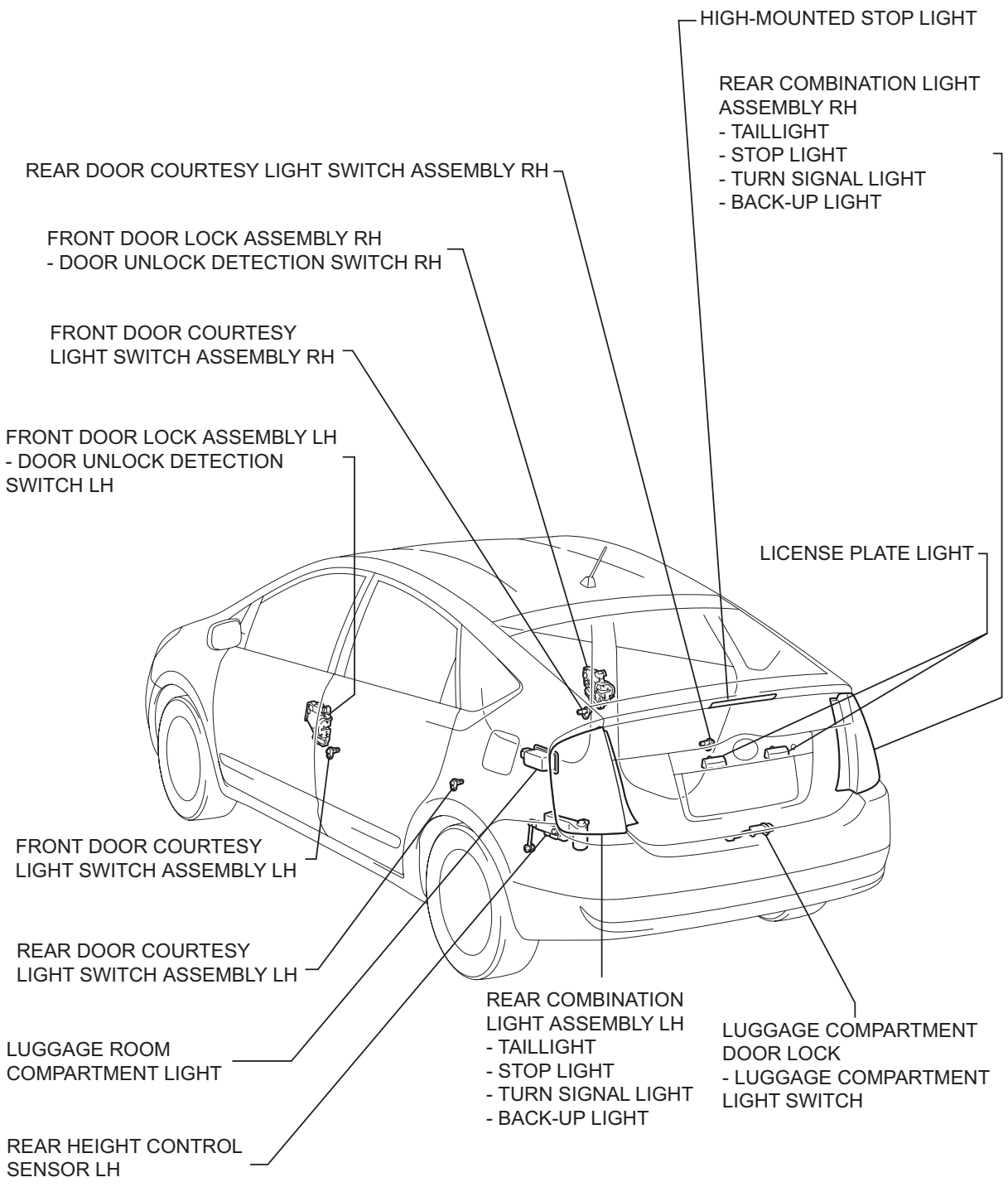
HIGH-MOUNTED STOP LIGHT
REAR COMBINATION LIGHT ASSEMBLY RH
- TAILLIGHT
- STOP LIGHT
- TURN SIGNAL LIGHT
- BACK-UP LIGHT
REAR DOOR COURTESY LIGHT SWITCH ASSEMBLY RH
FRONT DOOR LOCK ASSEMBLY RH
- DOOR UNLOCK DETECTION SWITCH RH
FRONT DOOR COURTESY LIGHT SWITCH ASSEMBLY RH
FRONT DOOR LOCK ASSEMBLY LH
- DOOR UNLOCK DETECTION SWITCH LH
LICENSE PLATE LIGHT
FRONT DOOR COURTESY LIGHT SWITCH ASSEMBLY LH
REAR DOOR COURTESY LIGHT SWITCH ASSEMBLY LH
LUGGAGE ROOM COMPARTMENT LIGHT
REAR HEIGHT CONTROL SENSOR LH
REAR COMBINATION LIGHT ASSEMBLY LH
- TAILLIGHT
- STOP LIGHT
- TURN SIGNAL LIGHT
- BACK-UP LIGHT
LUGGAGE COMPARTMENT DOOR LOCK
- LUGGAGE COMPARTMENT LIGHT SWITCH
P
I102177E02

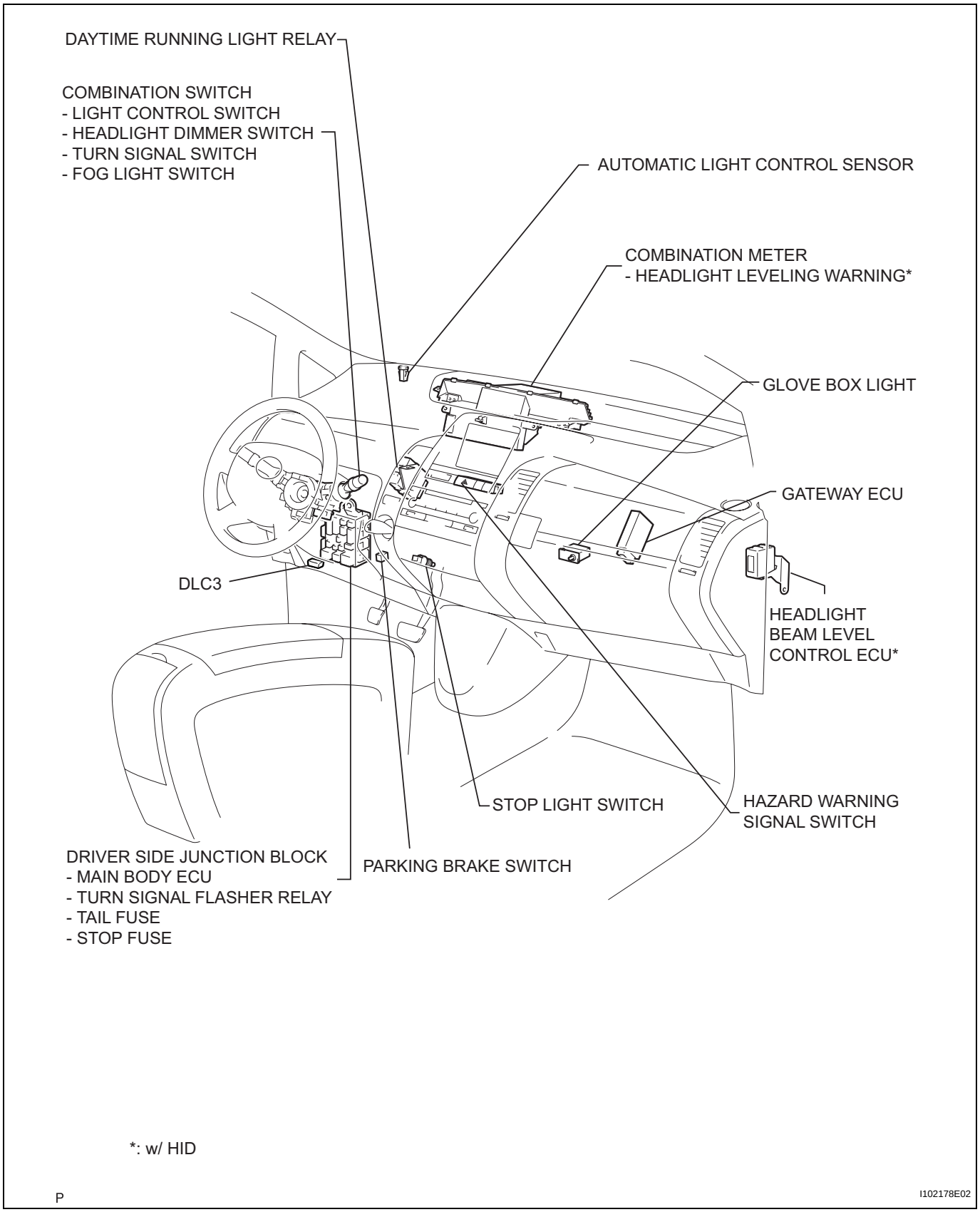
DAYTIME RUNNING LIGHT RELAY
COMBINATION SWITCH
- LIGHT CONTROL SWITCH
- HEADLIGHT DIMMER SWITCH
- TURN SIGNAL SWITCH
- FOG LIGHT SWITCH
AUTOMATIC LIGHT CONTROL SENSOR
COMBINATION METER
- HEADLIGHT LEVELING WARNING*
GLOVE BOX LIGHT
GATEWAY ECU
DLC3
HEADLIGHT
BEAM LEVEL
CONTROL ECU*
STOP LIGHT SWITCH
HAZARD WARNING
SIGNAL SWITCH
DRIVER SIDE JUNCTION BLOCK
- MAIN BODY ECU
- TURN SIGNAL FLASHER RELAY
- TAIL FUSE
- STOP FUSE
PARKING BRAKE SWITCH
*: w/ HID
P
I102178E02

LI

SYSTEM DIAGRAM

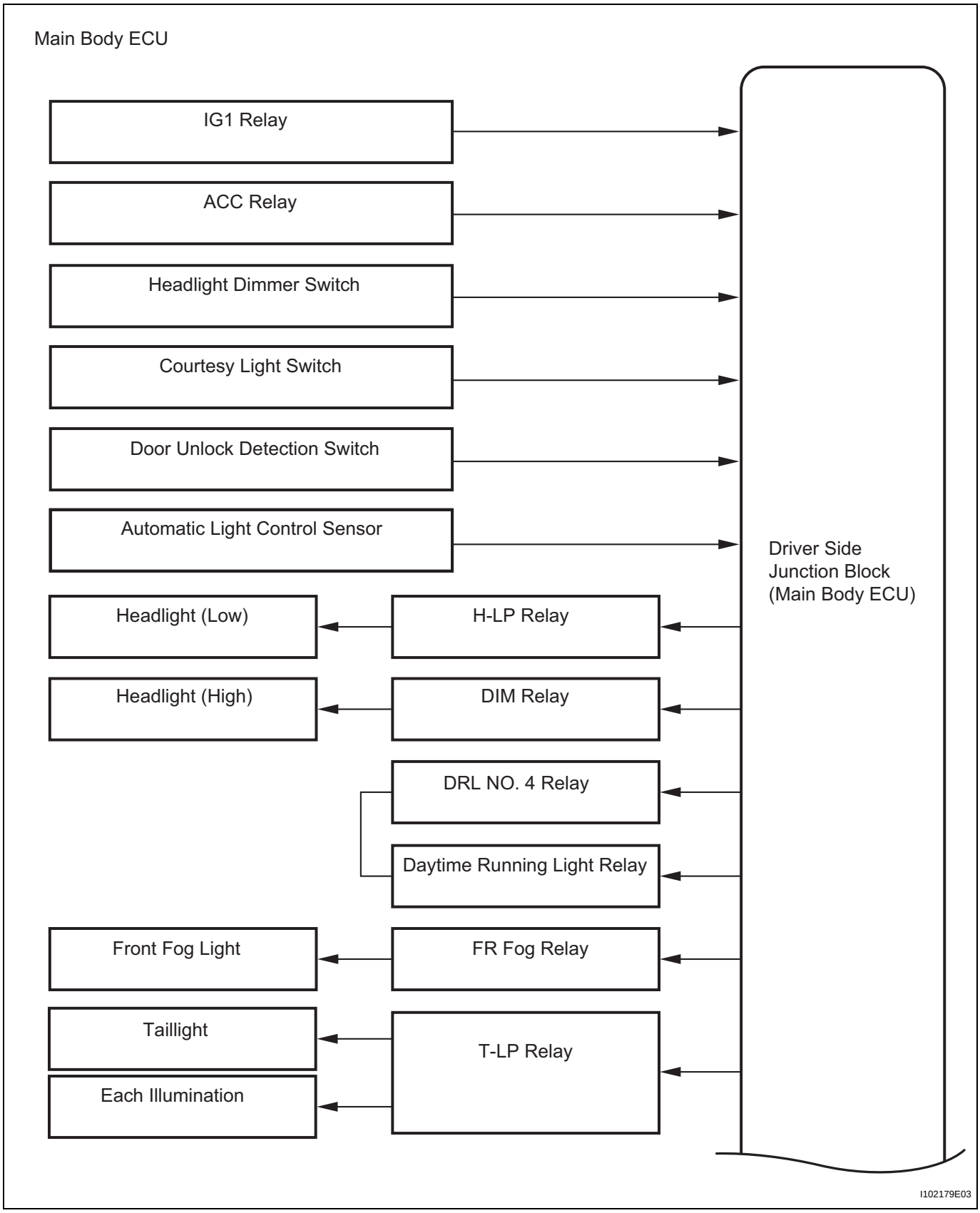

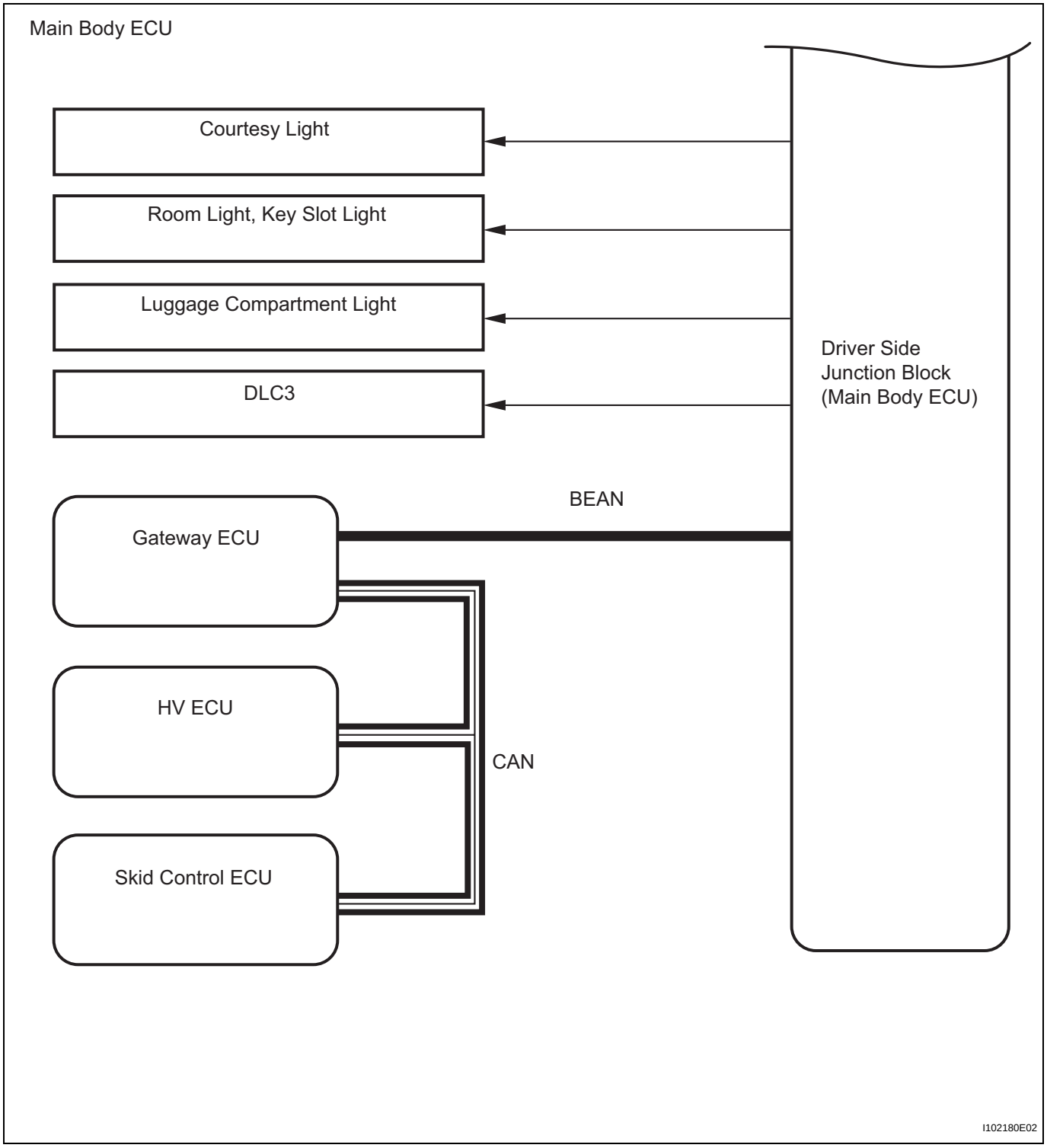
Main Body ECU
Courtesy Light
Room Light, Key Slot Light
Luggage Compartment Light
DLC3
Driver Side
Junction Block
(Main Body ECU)
BEAN
Gateway ECU
HV ECU
CAN
Skid Control ECU
I102180E02

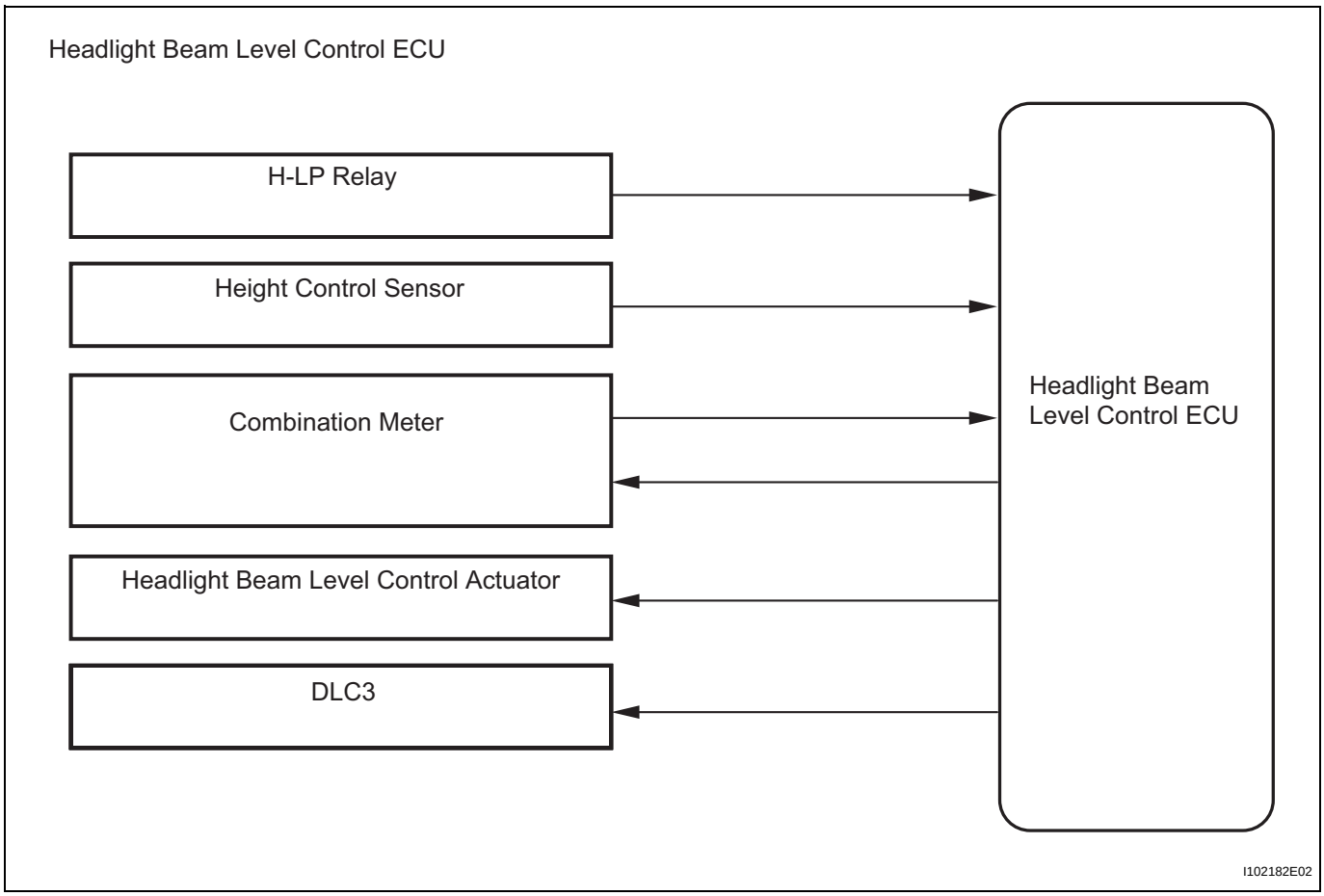

Input and output signal of each ECU

Transmitter	Receiving	Signal	Communication Method
HV ECU	Body ECU	Ready condition signal	CAN - BEAN
Skid Control ECU	Body ECU	Parking brake switch signal	CAN - BEAN

SYSTEM DESCRIPTION

1. PARTS DESCRIPTION

Components	Function
Automatic light control sensor	Detects ambient light and sends information to main body ECU
Hazard warning switch	On or off state is sent to flasher relay
Stop light switch	Sends brake pedal state to rear combination light and high mount stop light
H-LP relay	Turns headlight on when it is actuated by headlight ON demand signal via main body ECU
T-LP relay	Turns taillight and illumination on when it is actuated by taillight ON demand signal via main body ECU
DIM relay	Turns headlight (high beam) on when it is actuated by headlight ON demand signal via main body ECU
DRL relay	Controls headlight (low beam) when it is actuated by DRL ON demand signal via main body ECU
Daytime running light relay	Controls headlight (low beam) when it is actuated by DRL ON demand signal via main body ECU
Door courtesy switch	Detects door open / close state and sends information to respective main body ECU
Door unlock detection switch	Detects door lock / unlock state and sends information to respective main body ECU
Headlight beam level control actuator	Moves headlight (low beam) up and down according to the information from headlight beam level control ECU
Height control sensor	Detects vehicle height and sends corresponding information to headlight beam level control ECU
Combination meter	Sends headlight level warning according to information from headlight beam level control ECU

2. OPERATION DESCRIPTION

(a) Manual lighting system

(1) The main body ECU receives the following:
- Light switch tail signal
- Light switch head signal
- Light switch high beam signal
- Front fog switch signal
- Lighting system passing signal

(2) The main body ECU controls the following based on the signals listed in (1).
- H-LP relay ON signal
  Sent when light switch head signal is received.
- T-LP relay ON signal
  Sent when light switch tail signal and light switch head signal are received.
- DIM relay ON signal
  Sent when light switch high beam signal is received.
- FR FOG relay ON signal
  Sent when light switch tail and front fog switch signals are received.

(3) The main body ECU controls the on / off operation of the following based on the signals listed in (2):
- Headlight (low)
- Headlight (high)

- Clearance light
- Side marker light
- Front fog light
- Taillight
- License plate light
- Room lights

(b) Automatic lighting system

(1) The main body ECU receives the following:
- Light switch auto signal
- Light control switch signal

(2) The main body ECU controls the following based on the signals listed in (1):
- H-LP relay ON signal
  Sent according to the illuminance information from the light control signal when the light switch auto signal is received.
- T-LP relay ON signal
  Sent according to the illuminance information from the light control signal when the light switch auto signal is received.

(3) The main body ECU controls the on / off operation of the following based on the signals listed in (2).
- Headlight (low)
- Clearance light
- Side marker light
- Taillight
- License plate light

(c) Daytime running light system

(1) The main body ECU receives the following:
- Light switch tail signal
- Light switch head signal
- Light switch auto signal
- Light control signal
- Ready condition signal
- Parking brake switch signal

(2) The main body ECU controls the following based on the signals listed in (1).
- H-LP relay ON signal
  Sent when the ready condition signal has been received but the light switch head and parking brake switch signals have not been received.
  Sent when the ready condition signal has been received but the parking brake switch signal and the illuminance information from the light control have not been received while receiving the light switch auto signal.

- DIM relay ON signal
  Sent when the relay condition signal has been received but the light switch head and parking brake switch signals have not been received.
  Sent when the ready condition signal has been received but the parking brake switch signal and the illuminance information from the light control have not been received while receiving the light switch auto signal.
- DRL NO. 4 relay ON signal
  Sent when the ready condition signal has been received but the light switch head and parking brake switch signals have not been received.
  Sent when the ready condition signal has been received but the parking brake switch signal and the illuminance information from the light control have not been received while receiving the light switch auto signal.
- PWM output signal
  Sent when the ready condition signal has been received but the light switch tail, light switch head, and parking brake switch signals have not been received.
  Sent when the ready condition signal has been received but the parking brake switch signal and the illuminance information from the light control have not been received while receiving the light switch auto signal.

(3) The main body ECU controls the following based on the signals listed in (2):
- Headlight (Low)

(d) Light auto turn off system

(1) The main body ECU receives the following:
- Light switch tail signal
- Light switch head signal
- Light switch auto signal
- Front fog switch signal
- Power switch signal
- Light control signal
- Driver's seat courtesy switch signal

(2) The main body ECU controls the following based on the signals listed in (1).
- H-LP relay ON signal
  Terminates communication when the power switch ON (IG) signal terminates and the driver's seat courtesy switch signal is received while sending the H-LP relay ON signal. The H-LP relay ON signal results from receiving the light switch head signal and illuminance information from the light control signal.

- T-LP relay ON signal
  Terminates communication when the power switch ON (IG) signal terminates and the driver's seat courtesy switch signal is received while sending the T-LP relay ON signal. The T-LP relay ON signal results from receiving the light switch head signal and illuminance information from the light control signal.

(3) The main body ECU controls the on / off operation of the following based on the signals listed in (2).
- Headlight (low)
- Headlight (high)
- Clearance light
- Side marker light
- Front fog light
- Taillight
- License plate light

(e) Illuminated entry system

(1) The main body ECU receives the following:
- Driver side door courtesy switch signal
- Front passenger side door courtesy switch signal
- Rear LH side door courtesy switch signal
- Rear RH side seat door courtesy switch signal
- Driver side door lock signal
- Passenger side door lock signal (w/ Smart key system, w/ Theft deterrent system)
- Power switch signal

(2) The main body ECU controls the following based on the signals listed in (1):
- Illumination ON demand signal
  Sent when the respective door courtesy switch signals are received.
  Sent when the respective door lock signals are received.
  Sent when the power switch ON (IG) and power switch ON (ACC) signals are not received.

(3) The main body ECU controls on / off and fade-in / fade-out operations of the following based on the signals listed in (2):
- Key slot light
- No. 1 room light
- Personal light (Overhead junction block)

(f) Auto headlight leveling system

(1) The headlight beam level control ECU receives the following:
- H-LP relay ON signal
- Vehicle height sensor signal
- Vehicle speed signal

(2) The headlight beam level control ECU controls the following based on the signals listed in (1).
- Leveling motor operation demand signal.
  Sent based on the vehicle height sensor signal and vehicle speed sensor when the H-LP relay ON signal is received.
  The headlight beam level control ECU receives vehicle speed signal and determines the driving condition according to the table below, and then starts / terminates controlling on the headlight leveling actuator.

Vehicle Speed	**Mode**	**Control**
Less than 0.7 km/h (0.4 mph)	While stopping	Controls
More than 30 km/h (19 mph) or less than 180 km/h (112 mph)	While driving at constant speed	Controls
More than 30 km/h (19 mph) or less than 180 km/h (112 mph)	While accelerating	Does not control
More than 180 km/h (112 mph)	While driving at high speed	Does not control
More than 0.7 km/h (0.4 mph) or less than 30 km/h (19 mph)	While driving at low speed	Does not control

(3) The headlight beam level control ECU controls the following based on the signal listed in (2).
- Headlight beam leveling actuator

HOW TO PROCEED WITH TROUBLESHOOTING

HINT:
- Use these procedures to troubleshoot the lighting system.
- *: Use the intelligent tester.

1 VEHICLE BROUGHT TO WORKSHOP

NEXT

2 INSPECT BATTERY VOLTAGE

LI

Standard voltage:
11 to 14 V
If the voltage is below 11 V, recharge or replace the battery before proceeding.

NEXT

3 INSPECT COMMUNICATION FUNCTION LARGE-SCALE MULTIPLEX COMMUNICATION SYSTEM (BEAN)*

(a) Use the intelligent tester (with CAN VIM) to check if the Multiplex Communication System (MPX) is functioning normally.
Result

Result	Proceed to
MPX DTC is not output	A
MPX DTC is output (see page MP-16)	B

B → **Go to MULTIPLEX COMMUNICATION SYSTEM**

A

4 CHECK FOR DTC*

Result

Result	Proceed to
DTC is not output	A
DTC is output (see page LI-30)	B

B → **Go to step 7**

A

5 PROBLEM SYMPTOMS TABLE

Result

Result	Proceed to
Fault is not listed in problem symptoms table	A
Fault is listed in problem symptoms table (see page LI-18)	B

B → **Go to step 7**

A

6 OVERALL ANALYSIS AND TROUBLESHOOTING*

(a) Operation Check (see page LI-14)
(b) Terminals of ECU (see page LI-21)
(c) DATA LIST / ACTIVE TEST (see page LI-28)

NEXT

7 REPAIR OR REPLACE

NEXT

8 CONFIRMATION TEST

NEXT

END

OPERATION CHECK

1. CHECK ILLUMINATED ENTRY OPERATION

(a) Illumination entry system controls the following:
- Key slot light
- No. 1 room light

(b) Check that the lights turn on after:
(1) Unlocking driver or front passenger door that was closed and locked with the power switch OFF.

(c) Check that the lights fade out after:
(1) Leaving the doors unlocked for 15 seconds.
(2) Turning the power switch ON (ACC or IG).
(3) Locking all the doors.

(d) Check that the lights stay on for at least 15 seconds after opening any of the doors, then fade out again after 15 seconds.

(e) Check that the lights turn on after:
(1) Closing all the doors and turning the power switch from ON (ACC or IG) to OFF.

(f) Check that the lights fade out after:
(1) Leaving the doors unlocked for 15 seconds.
(2) Turning the power switch ON (ACC or IG).
(3) Locking all the doors.

(g) Check that the lights stay on for at least 15 seconds after opening any of the doors, then fade out again in 15 seconds after closing all the doors.

(h) Check that the lights turn on when opening any of the doors and fade out after either closing and locking them or turning the power switch ON (ACC or IG).

2. CHECK CONLIGHT SYSTEM OPERATION

(a) Turn the power switch ON (IG).

(b) Turn the headlight dimmer switch to the AUTO position.

(c) Cover the automatic light control sensor and check that the taillight and headlight turn on in order.

(d) Uncover the automatic light control sensor and check that the headlight and taillight go off in order.

3. CHECK LIGHT AUTO TURN OFF SYSTEM OPERATION

HINT:
Perform the operation check at a location with bright surroundings.

(a) Turn the power switch ON (IG), and switch the light control switch into the TAIL or HEAD position when driver side door is closed.

(b) Turn the power switch OFF and open the driver's door. Check that the headlight, taillight, and front fog light go off.

(c) Turn the power switch ON (IG) and switch the light control switch into the AUTO position.

(d) Turn the power switch OFF and open the driver's door when the light control switch is in the AUTO position and headlights remain on by the conlight system operation. Check that the headlight, taillight, front fog light go off.

4. CHECK BATTERY SAVER OPERATION

(a) Check that the all lights go off after approximately 20 minutes with the power switch OFF and driver door opened.

5. CHECK DAYTIME RUNNING LIGHT OPERATION

(a) Turn the light control switch off, and release the parking brake with the power switch ON (IG or READY). Check that the headlight (low beam) dims.

(b) Check that the daytime running light goes off after turning the power switch OFF or changing the light control switch to the HEAD position.

(c) Check that the headlight (low beam) dims when releasing the parking brake under the following conditions:
- Light control switch is in the AUTO position (with bright surroundings).
- Conlight system is not operating.
- Power switch is ON (IG).
- Power switch is ON (READY).

(d) Turn the power switch OFF or change the light control switch to the TAIL or HEAD position. Check that the headlight (low beam) goes off.

CUSTOMIZE PARAMETERS

HINT:
The following items can be customized.
NOTICE:
- **When the customer requests a change in a function, first make sure that the function can be customized.**
- **Be sure to make a note of the current settings before customizing.**
- **When troubleshooting a function, first make sure that the function is set to the default setting.**

Illuminated entry

Display (Item)	Default	Contents	Setting
LIGHTING TIME	15 s	Changes lighting time after closing doors (light quickly fades out when power switch is turned ON (IG)	7.5 s / 15 s / 30 s
I/L AUTO OFF	ON	Illumination AUTO OFF ON function to turn off interior light automatically after specified time for prevent the battery loss when the interior light switch is "DOOR" position and the door is open	ON / OFF
I/L ON/UNLOCK	ON	Function to light interior light, etc. when the door is unlocked with a transmitter, door key or door lock control switch	ON / OFF
I/L ON/ACC OFF	ON	Illuminates interior light when power switch is turned from the ON (ACC) to ON (IG) position	ON / OFF

Light control

Display (Item)	Default	Contents	Setting
SENSITIVITY	NORMAL	To adjust sensitivity of lighting illumination. Refer to the illustration*1.	LIGHT2 / LIGHT1 / NORMAL / DARK1 / DARK2
DISP EX ON SEN	NORMAL	Changes brightness when lowering lights such as combination meter indicator light, A/C indicator light, and clock light. Refer to the illustration*2.	LIGHT2 / LIGHT1 / NORMAL / DARK1 / DARK2
DISP EX OFF SEN	NORMAL	Changes brightness when lowering lights such as combination meter indicator light, A/C indicator light, and clock. Refer to the illustration*3.	LIGHT2 / LIGHT1 / NORMAL / DARK1 / DARK2
DRL FUNCTION (●)	ON	ON / OFF of DRL function	ON / OFF

●: w/ Daytime running light

Illustration of *1

Brightness of lowering the lights	Dark ←→ Bright
Setting	DARK2 - DARK1 - NORMAL - LIGHT1 - LIGHT2

Illustration of *2

Brightness when canceling the lowering of the lights	Dark ←→ Bright
Setting	DARK2 - DARK1 - NORMAL - LIGHT1 - LIGHT2

Illustration of *3

Lighting brightness	Dark ←→ Bright
Setting	DARK2 - DARK1 - NORMAL - LIGHT1 - LIGHT2

INITIALIZATION

1. HEADLIGHT BEAM LEVEL CONTROL ECU INITIALIZATION

NOTICE:

- **Initialize the headlight beam level control ECU when: vehicle height changes by such means as removal, installation, and replacement of the height control sensor, replacement of the suspension, or replacement of the headlight beam level control ECU assembly.**
- **Adjust the headlight aim after initializing the headlight beam level control ECU (see page LI-80).**

1	CHECK VEHICLE CONDITION

(a) Leave approximately 10 liters of fuel in the tank (fuel indicator shows approximately 2 segments).
(b) Unload the vehicle.
(c) Check that there is no passenger in the vehicle.
(d) Turn off the headlights.

NEXT

2	CHECK WARNING INDICATOR

(a) Turn the power switch ON (IG) and check if the warning indication appears.

Standard:

Master warning in the meter blinks and "AUTO LEVELING WARNING" appears.

HINT:

Warning indication appears only when replacing with a new headlight beam level control ECU. Go to "OK" for removal / installation of the headlight beam level control ECU, replacement / removal / installation of the height control sensor, or replacement of the suspension.

NG → **CHECK HEADLIGHT BEAM LEVEL CONTROL ECU, WIRE HARNESS AND CONNECTOR**

OK

3	INITIALIZATION

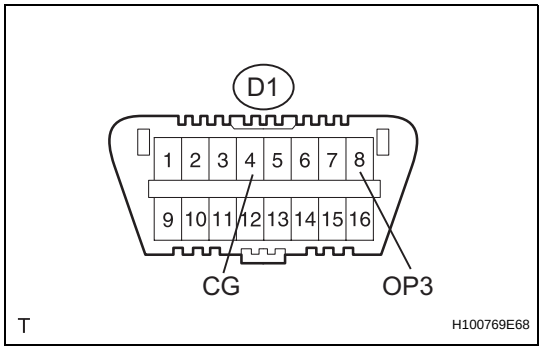

(a) Connect terminals 4 (CG) and 8 (OP3) of the DLC3 using the SST.
(b) Flash the headlight more than 3 times within 20 seconds using the headlight dimmer switch. Check if the warning indication appears (step A).

NOTICE:
Flash the headlight at an interval of 1 second

LI

OK

Action	Warning indication
headlight beam level control ECU replacement (new)	Appears → Disappears (initialization complete)
headlight beam level control ECU removal / installation, height control sensor replacement / removal / installation, or suspension replacement	Does not appear → Appears (initialization complete) → Disappears

NG → **RETURN TO "CHECK WARNING INDICATOR" IF INITIALIZATION DOES NOT SUCCEED AFTER REPEATING STEP A MORE THAN 20 TIMES**

OK

INITIALIZATION COMPLETE

PROBLEM SYMPTOMS TABLE

HINT:

- Use the table below to help determine the cause of the problem symptom. The potential causes of the symptoms are listed in order of probability in the "Suspected area" column of the table. Check each symptom by checking the suspected areas in the order they are listed. Replace parts as necessary.
- Inspect the fuses and relays related to this system before inspecting the suspected areas below.

Headlight and taillight system

Symptom	Suspected area	See page
Low beam does not turn on (one side)	1. Bulb	-
	2. Wire harness	-
	3. Light control computer (HID)	-
Low beam does not turn on (both sides)	1. Light control switch circuit	LI-45
	2. Headlight relay circuit	LI-38
	3. Main body ECU	-
High beam does not turn on (one side)	1. Bulb	-
	2. Wire harness	-
High beam does not turn on (both sides)	1. Light control switch circuit	LI-45
	2. Headlight relay circuit	LI-38
	3. DRL relay circuit (w/ DRL)	LI-41
	4. Main body ECU	-
FLASH does not turn on (Low beam and high beam are normal)	1. Light control switch circuit	LI-45
	2. Main body ECU	-
Headlight is dim	1. Bulb	-
	2. Wire harness	-
Taillight does not turn on (all)	1. Light control switch circuit	LI-45
	2. TAIL relay circuit	LI-58
	3. Main body ECU	-
Taillight does not turn on (one)	1. Bulb	-
	2. Wire harness	-
Daytime running light system does not operate	1. Light control switch circuit	LI-45
	2. Headlight relay circuit	LI-38
	3. DRL relay circuit	LI-41
	4. Parking brake switch circuit	BC-186
	5. Main body ECU	-

Automatic light control system

Symptom	Suspected area	See page
Automatic light control system does not operate	1. Light control switch circuit	LI-45
	2. Automatic light control sensor circuit	LI-50
	3. Main body ECU	-

Light auto turn off system

Symptom	Suspected area	See page
Light auto turn off system does not operate	1. Light control switch circuit	LI-45
	2. Power source circuit	LI-71
	3. Door courtesy switch circuit	LI-54
	4. Main body ECU	-

Fog light system

Symptom	Suspected area	See page
Fog light does not turn on (one side)	1. Bulb	-
	2. Wire harness	-
Fog light does not turn on (both sides)	1. Headlight dimmer switch	LI-106
	2. Wire harness	-
	3. Main body ECU	-

Turn signal light and hazard warning system

Symptom	Suspected area	See page
Hazard and turn signal do not turn on	1. Turn signal flasher relay	LI-123
	2. Wire harness	-
	3. Driver side junction block	-
Hazard warning light does not turn on (Turn is normal)	1. Hazard warning	LI-109
	2. Wire harness	-
	3. Driver side junction block	-
Turn signal does not turn on (Hazard is normal)	1. Headlight dimmer switch	LI-106
	2. Wire harness	-
	3. Driver side junction block	-
Turn signal does not turn on in one direction	1. Bulb	-
	2. Wire harness	-
	3. Driver side junction block	-

Stop light system

Symptom	Suspected area	See page
Stop light does not turn on (one)	1. Bulb	-
	2. Wire harness	-
Stop light does not turn on (all)	1. Stop light switch	LI-111
	2. Wire harness	-

Illuminated entry system

Symptom	Suspected area	See page
Illuminated entry system controlled by the multiplex network body ECU does not operate	1. Power source circuit	LI-71
	2. Door lock position circuit	LI-56
	3. Door courtesy switch circuit	LI-54
	4. Main Body ECU	-

Headlight beam level control system

Symptom	Suspected area	See page
Headlight beam level control system does not operate (warning light turns on)	1. Headlight beam level control ECU power source circuit	LI-61
	2. Height control sensor circuit	LI-63
	3. Headlight beam level control ECU	-
Headlight beam level control system does not operate (warning light turns off)	1. Headlight signal circuit	LI-63
	2. Headlight beam level control actuator circuit	LI-61
	3. Warning light circuit	LI-69
	4. Headlight beam level control ECU	-
Headlight beam level control system cannot be canceled during low speed driving (driving condition cannot be determined)	1. Vehicle speed signal circuit	LI-35
	2. Headlight beam level control ECU	-

Others

Symptom	Suspected area	See page
Vanity light does not turn on	1. Bulb	-
	2. Wire harness	-

Symptom	Suspected area	See page
Back up light does not turn on	1. Bulb	-
	2. Back/up relay	-
	3. Wire harness	-
Luggage room light does not turn on	1. Bulb	-
	2. Wire harness	-
Courtesy light does not turn on	1. Bulb	-
	2. Door courtesy light switch	LI-113
	2. Wire harness	-
	4. Body ECU	-

TERMINALS OF ECU

1. CHECK DRIVER SIDE JUNCTION BLOCK (MAIN BODY ECU)

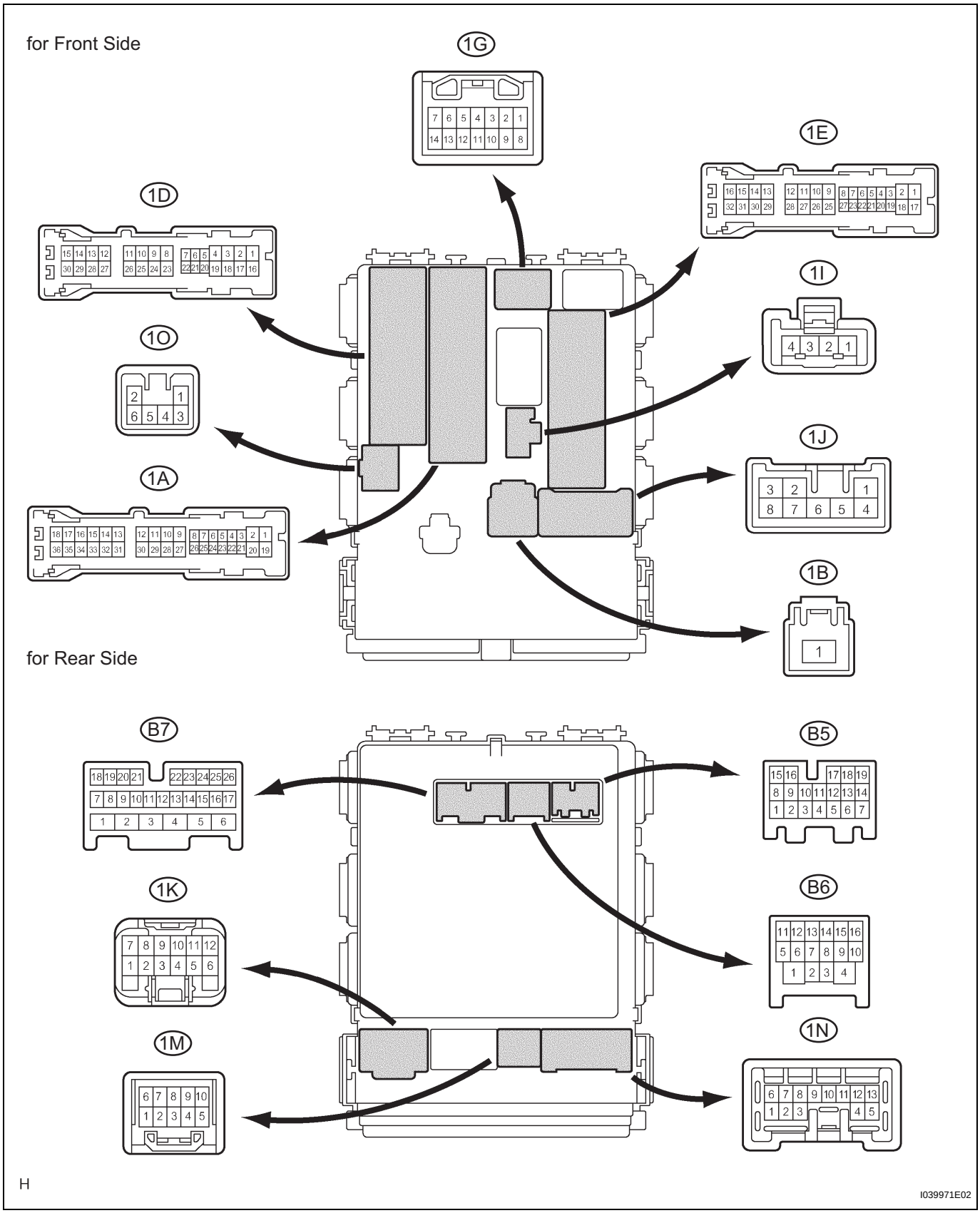

H

Symbols (Terminal No.)	Wiring Color	Terminal Description	Condition	Specified Condition
Tail (1A-15) - GND (1E-17)	BR - W-B	Taillight signal (To front side marker)	Front RH side marker light turns on	10 to 14 V
			Front RH side marker light turns off	Below 1 V
ECUB (1A-30) - GND (1E-17)	R - W-B	Power source (From battery)	Always	10 to 14 V
Tail (1A-33) - GND (1E-17)	BR - W-B	Taillight signal (To front side marker)	Front LH side marker light turns on	10 to 14 V
			Front LH side marker light turns off	Below 1 V
RCTY (1D-5) - GND (1E-17)	R - W-B	Rear LH door courtesy switch signal	Rear LH door is opened	Below 1 V
			Rear LH door is closed	10 to 14 V
BCTY (1D-7) - GND (1E-17)		Luggage room courtesy switch signal	Luggage room door is opened	Below 1 V
			Luggage room door is closed	10 to 14 V
Tail (1D-10) - GND (1E-17)	BR - W-B	Taillight signal (To license plate light and rear combination light)	License plate light and rear RH combination light come on	10 to 14 V
			License plate light and rear RH combination light go off	Below 1 V
RCTY(1D-20) - GND (1E-17)	R - W-B	Rear RH door courtesy switch signal	Rear LH door is opened	Below 1 V
			Rear LH door is closed	10 to 14 V
DCTY (1D-21) - GND (1E-17)	V - W-B	Front LH door courtesy switch signal	Front LH door is opened	Below 1 V
			Front LH door is closed	10 to 14 V
PCTY (1D-24) - GND (1E-17)	BR - W-B	Front RH door courtesy switch signal	Front RH door is opened	Below 1 V
			Front RH door is closed	10 to 14 V
Tail (1D-29) - GND (1E-17)	BR - W-B	Taillight signal (To rear combination light)	Rear LH combination light turns on	Below 1 V
			Rear LH combination light turns off	10 to 14 V
Tail (1E-10) - GND (1E-17)	BR - W-B	Taillight signal (To each illumination)	Light control switch is in TAIL or HEAD	Below 1 V
			Light control switch is OFF	10 to 14 V
GND (1E-17) - Body ground	W-B - Body ground	Ground	Always	Below 1 V
ILL (1E-27) - GND (1E-17)	B - W-B	Illumination signal circuit	Key slot light turns on	Below 1 V
			Key slot light turns off	10 to 14 V
MPX1 (1G-9) - GND (1E-17)	GR - W-B	Multiplex communication signal circuit	Power switch ON (IG)	Signal waveform
HU (1I-4) - GND (1E-17)	P - W-B	Headlight dimmer switch signal	Headlight dimmer switch in HIGH	Below 1 V
			Headlight dimmer switch not in HIGH	10 to 14 V

Symbols (Terminal No.)	Wiring Color	Terminal Description	Condition	Specified Condition
Tail (1N-7) - GND (1E-17)	GR - W-B	Taillight signal (To each illumination)	Light control switch is in TAIL or HEAD	Below 1 V
			Light control switch is OFF	10 to 14 V
Tail (1N-9) - GND (1E-17)	G - W-B		Light control switch is in TAIL or HEAD	Below 1 V
			Light control switch is OFF	10 to 14 V
Tail (1M-6) - GND (1E-17)	L - W-B		Light control switch is in TAIL or HEAD	Below 1 V
			Light control switch is OFF	10 to 14 V
Tail (1M-8) - GND (1E-17)	G - W-B		Light control switch is in TAIL or HEAD	Below 1 V
			Light control switch is OFF	10 to 14 V
ILL (1O-2) - GND (1E-17)	L - W-B	Illumination signal circuit	Room light turns on	Below 1 V
			Room light turns off (When switch is in DOOR position)	10 to 14 V
CYLB (B5-7) - GND (1E-17)	W - W-B	Luggage room light signal circuit	Luggage room light turns on	Below 1 V
			Luggage room light turns off (When switch is in DOOR position)	10 to 14 V
LSWR (B5-10) - GND (1E-7)	O - W-B	Door lock position switch circuit	Rear door is in lock position	10 to 14 V
			Rear door is in unlock position	Below 1 V
LIB1 (B5-13) - GND (1E-17)	SB - W-B	Front fog light switch signal circuit	Front fog light switch ON	Below 1 V
			Front fog light switch OFF	10 to 14 V
CYPL (B5-14) - GND (1E-17)	L - W-B	Door courtesy light circuit	Door courtesy light RH turns on	Below 1 V
			Door courtesy light RH turns off	10 to 14 V
MPX2 (B5-15) - GND (1E-17)	B - W-B	Multiplex communication signal circuit	Power switch ON (IG)	Signal waveform
FFOG (B5-17) - GND (1E-17)	Y - W-B	Front fog light operation signal circuit	Front fog light turns on	Below 1 V
			Front fog light turns off	10 to 14 V
AUTO (B5-18) - GND (1E-17)	W - W-B	Headlight dimmer switch signal circuit	Light control switch is in AUTO	Below 1 V
			Light control switch is not in AUTO	10 to 14 V
CYLD (B5-19) - GND (1E-17)	Y - W-B	Door courtesy light circuit	Door courtesy light LH turns on	Below 1 V
			Door courtesy light LH turns off	10 to 14 V
PWM1 (B6-3) - GND (1E-7)*	SB - W-B	Daytime running light operation signal	Daytime running light does not operate	10 to 14 V
			Daytime running light operates	Below 1 V
HON (B6-12) - GND (1E-7)	W - W-B	Daytime running light operation signal	Daytime running light does not operate	Below 1 V
			Daytime running light operates	10 to 14 V
CLTE (B6-14) - GND (1E-7)	B - W-B	Light control sensor circuit (Ground circuit)	Always	Below 1 V
CLTS (B6-15) - GND (1E-7)	W - W-B	Light control sensor circuit (Signal circuit)	Power switch ON (IG)	Signal waveform
CLTB (B6-16) - GND (1E-7)	R - W-B	Light control sensor circuit (Power source circuit)	Power switch ON (IG)	10 to 14 V

Symbols (Terminal No.)	Wiring Color	Terminal Description	Condition	Specified Condition
DRL/DIM (B7-2) - GND (1E-17)	Y - W-B	DIM relay operation signal	Headlight (High beam) turns on	Below 1 V
			Headlight (High beam) turns off	10 to 14 V
HEAD (B7-3) - GND (1E-17)	B - W-B	Headlight dimmer switch signal circuit	Light control switch is in HEAD	Below 1 V
			Light control switch is not in HEAD	10 to 14 V
LSWP (B7-10) - GND (1E-7)	Y - W-B	Door lock position switch circuit	Front RH door is in lock position	Below 1 V
			Front RH door is in unlock position	10 to 14 V
HRLY (B7-20) - GND (1E-7)	G - W-B	HEAD relay operation signal	Headlight turns on	Below 1 V
			Headlight turns off	10 to 14 V
TAIL (B7-21) - GND (1E-7)	R - W-B	Headlight dimmer switch signal circuit	Light control switch is in TAIL	Below 1 V
			Light control switch is not in TAIL	10 to 14 V
HF (B7-22) - GND (1E-7)	G - W-B		Headlight dimmer switch is in FLASH	Below 1 V
			Headlight dimmer switch is not in FLASH	10 to 14 V
LSWD (B7-25) - GND (1E-7)	LG - W-B	Door lock position switch circuit	Front LH door is in lock position	10 to 14 V
			Front LH door is in unlock position	Below 1 V

HINT:
*: w/ Daytime running light

2. CHECK HEADLIGHT BEAM LEVEL CONTROL ECU

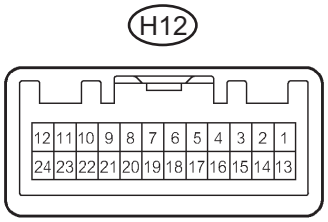

E073014E01

Symbols (Terminal No.)	Wiring Color	Terminal Description	Condition	Specified Condition
IG (H12-1) - E1 (H12-24)	V - W-B	Power source (From battery)	Power switch ON (IG)	10 to 14 V
SBR (H12-2) - E1 (H12-24)	P - W-B	Height control sensor (Power source)	Power switch ON (IG)	4.5 to 5.5 V
RHT (H12-3) - E1 (H12-24)	W - W-B	Headlight beam level control actuator RH (Signal circuit)	With power switch ON (IG) and headlight ON, change the vehicle height and maintain height for more than 2 seconds	1.0 to 12.6 V (approx. 10 seconds)
LHT (H12-4) - E1 (H12-24)	R - W-B	Headlight beam level control actuator LH (Signal circuit)		
SHR (H12-5) - E1 (H12-24)	L - W-B	Height control sensor (Power source)	Power switch ON (IG)	Above 2.5 V
PRST (H12-9) - E1 (H12-24)	B - W-B	Initialize signal input terminal		Above 5.0 V

LI

Symbols (Terminal No.)	Wiring Color	Terminal Description	Condition	Specified Condition
HDLP (H12-10) - E1 (H12-24)	G - W-B	HEAD relay operate signal	Light control switch is in HEAD	Below 1 V
			Light control switch is mot HEAD	10 to 14 V
WNG (H12-11) - E1 (H12-24)	L - W-B	Headlight leveling warning signal (To combination meter)	HEADLIGHT LEVELING is indicated	Below 1 V
			HEADLIGHT LEVELING is not indicated	10 to 14 V
SPDR (H12-12) - E1 (H12-24)	V - W-B	Vehicle speed signal (From combination meter)	Vehicle is driving at 30 km/h (18 mph)	Pulse generation (See waveform 1)
RH+ (H12-13) - E1 (H12-24)	B - W-B	Headlight beam level control actuator RH (Power source circuit)	Power switch ON (IG)	10 to 14 V
LH+ (H12-14) - E1 (H12-24)	G - W-B	Headlight beam level control actuator LH (Power source circuit)		
SGR (H12-20) - E1 (H12-24)	Y - W-B	Height control sensor (Ground circuit)	Always	Below 1 V
RH- (H12-22) - E1 (H12-24)	BR - W-B	Headlight beam level control actuator RH (Ground circuit)		
LH- (H12-23) - E1 (H12-24)	LG - W-B	Headlight beam level control actuator LH (Ground circuit)		
E1 (H12-24) - Body ground (Body ground)	W-B - Body ground	Ground		

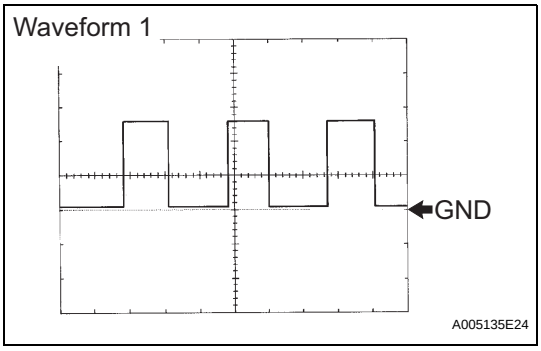

(a) Using an oscilloscope, check the waveform 1.

Waveform 1

Item	Content
Tester Connection	SPDR (H12-12) - GND (H12-24)
Tool Setting	5 V / DIV., 20 msec. / DIV.
Condition	Vehicle is driving at approximately 30 km/h (18 mph)

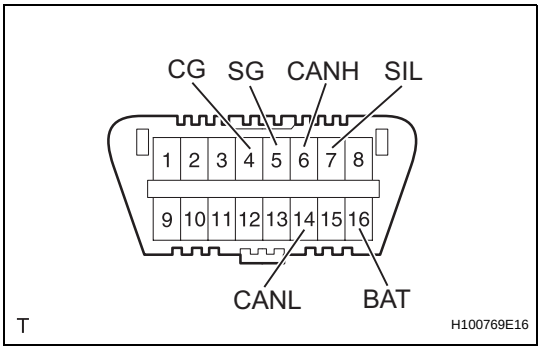

DIAGNOSIS SYSTEM

1. CHECK DLC3

(a) The ECU uses ISO 15765-4 for communication. The terminal arrangement of the DLC3 complies with SAE J1962 and matches the ISO 15765-4 format.

Symbols (Terminal No.)	Terminal Description	Condition	Specified Condition
SIL (7) - SG (5)	Bus "+" line	During transmission	Pulse generation
CG (4) - Body ground	Chassis ground	Always	Below 1 Ω
SG (5) - Body ground	Signal ground	Always	Below 1 Ω
BAT (16) - Body ground	Battery positive	Always	11 to 14 V
CANH (6) - CANL (14)	HIGH-level CAN bus line	Power switch is OFF*	54 to 67 Ω
CANH (6) - Battery positive	HIGH-level CAN bus line	Power switch is OFF*	1 MΩ or higher

Symbols (Terminal No.)	Terminal Description	Condition	Specified Condition
CANH (6) - CG (4)	HIGH-level CAN bus line	Power switch is OFF*	3 MΩ or higher
CANL (14) - Battery positive	LOW-level CAN bus line	Power switch is OFF*	1 MΩ or higher
CANL (14) - CG (4)	LOW-level CAN bus line	Power switch is OFF*	3 MΩ or higher

NOTICE:
***: Before measuring the resistance, leave the vehicle as is for at least 1 minute and do not operate the power switch, any other switches or the doors.**

If the result is not as specified, the DLC3 may have a malfunction. Repair or replace the harness and connector.

HINT:

Connect the cable of the intelligent tester (with CAN VIM) to the DLC3, turn the power switch ON (IG) and attempt to use the tester. If the display indicates that a communication error has occurred, there is a problem wither with the vehicle or with the tester.

- If communication is normal when the tester is connected to another vehicle, inspect the DLC3 on the original vehicle.
- If communication is still not possible when the tool is connected to another vehicle, the problem is probably in the tester itself, so consult the Service Department listed in the tester's instruction manual.

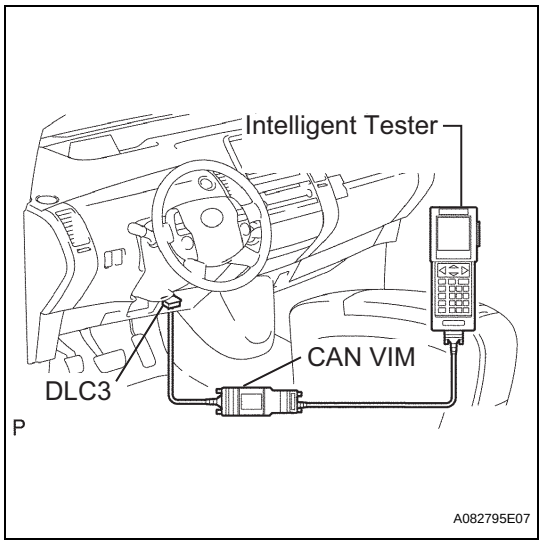

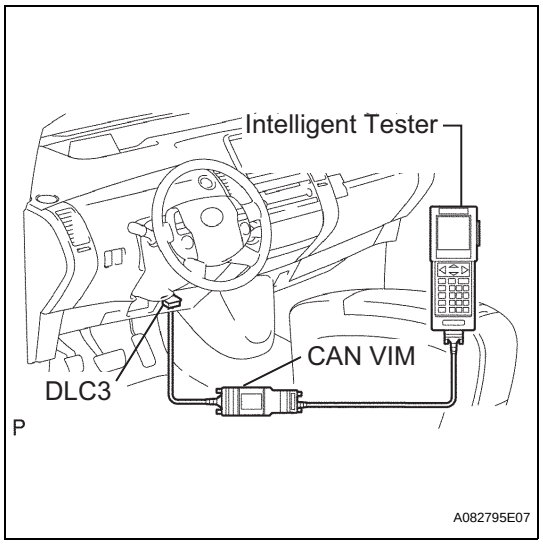

DTC CHECK / CLEAR

1. DTC CHECK

(a) Connect the intelligent tester (with CAN VIM) to the DLC3.

(b) Turn the power switch ON (IG).

(c) Read DTCs by following the prompts on the tester screen.

HINT:

Refer to the intelligent tester (with CAN VIM) operator's manual for further details.

LI

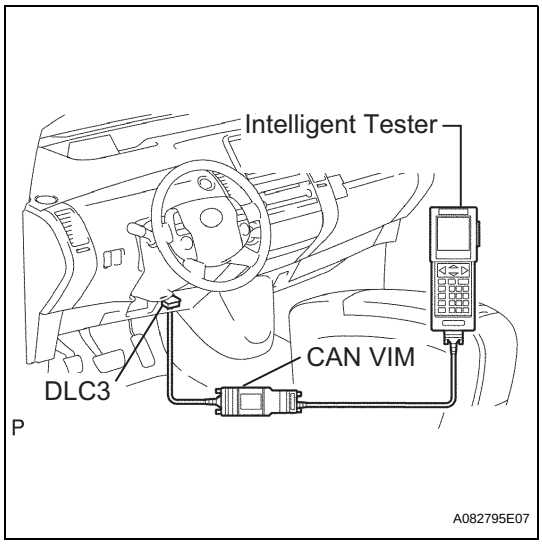

2. DTC CLEAR

(a) Connect the intelligent tester (with CAN VIM) to the DLC3.

(b) Turn the power switch ON (IG).

(c) Erase the DTCs by following the direction on the tester screen.

HINT:

Refer to the intelligent tester (with CAN VIM) operator's manual for further details.

FAIL-SAFE CHART

1. HEADLIGHT BEAM LEVEL CONTROL ECU

(a) If the headlight beam level control ECU detects the following malfunctions, it performs the fail safe control, blinks the master warning light in the combination meter, and displays "AUTO LEVELING WARNING" on the multi-display.

Item	Condition to Transfer	Condition to Return	Warning Indication
Over voltage*1	Detects input voltage of more than 18.5 V	Detects less than 17.5 V	Appears
Low voltage*1	Detects input voltage of less than 9 V	Detects more than 9.3 V	Does not appear
Vehicle height sensor malfunction*1	When either condition below is met: • Detects vehicle height sensor supply voltage of less than 4 V • Detects vehicle height signal malfunction (not within 0.5 V and 4.5 V) • Vehicle height sensor power source supply line is open, or short to GND • Vehicle height sensor GND line is open	Detects normal voltage for 5 sec.	Appears
Microcomputer*1	Detects ECU malfunction	Cancels reset of microcomputer	Appears
Leveling angle calculation value*2	Calculates values out of the actuator's operative range	-	Does not appear

HINT:
*1: Stops the actuator operation.
*2: Replaces the minimum or maximum value of the actuator's operating range with the calculated value.

2. BODY ECU (CONLIGHT CONTROL)

(a) The body ECU keeps the headlight or taillight on if there is a malfunction in the light sensor systems while the headlight is on due to the conlight control (headlight dimmer switch is in AUTO position).

(b) The body ECU prohibits conlight control if there is a malfunction in the sensor systems when the headlight turns off.

DATA LIST / ACTIVE TEST

1. READ DATA LIST

HINT:
Using the intelligent tester's DATA LIST allows switch, actuator and other item values to be read without removing any parts. Reading the DATA LIST early in troubleshooting is one way to save time.

(a) Connect the intelligent tester (with CAN VIM) to the DLC3.
(b) Turn the power switch ON (IG).
(c) Read the DATA LIST according to the display on the tester.

Main body ECU

Item	Measurement Item / Display (Range)	Normal Condition	Diagnostic Note
ACC SW	ACC switch signal / ON or OFF	ON: Power switch ON (ACC) OFF: Power switch OFF	-
IG SW	Ignition switch signal / ON or OFF	ON: Power switch ON (IG) OFF: Power switch OFF	-
D DOR CTY SW	Driver's door courtesy switch signal / ON or OFF	ON: Driver's door is open OFF: Driver's door is closed	-
P DOR CTY SW	Passenger's door courtesy switch signal / ON or OFF	ON: Passenger's door is open OFF: Passenger's door is closed	-
Rr DOR CTY SW	Rear door courtesy switch signal / ON or OFF	ON: Either right or left door is open OFF: Both right and left door are closed	-
P LOCK POS SW	Front passenger door lock position switch signal / ON or OFF	ON: Front passenger door lock is in unlock position OFF: Front passenger door lock is in lock position	-
DIMMER SW	Headlight dimmer switch signal / ON or OFF	ON: Headlight dimmer switch is in HIGH or FLASH position OFF: Headlight dimmer switch is in LOW position	-
HIGH FLASHER SW	Headlight dimmer switch signal / ON or OFF	ON: Headlight dimmer switch is in FLASH position OFF: Headlight dimmer switch is in except FLASH position	-
F FOG LIGHT	Front fog light switch signal / ON or OFF	ON: Front fog light switch is in ON position OFF: Front fog light switch is in OFF position	-
AUTO LIGHT SW	Auto light switch signal / ON or OFF	ON: Light control switch is in AUTO position OFF: Light control switch is not in AUTO position	-
HEAD LIGHT SW	Headlight control switch signal / ON or OFF	ON: Light control switch is in HEAD position OFF: Light control switch is not in HEAD position	-
TAIL LIGHT SW	Taillight switch signal / ON or OFF	ON: Light control switch is in TAIL or HEAD position OFF: Light control switch is not in TAIL or HEAD position	-
ILLUMINATE RATE	Illuminate rate / ON or OFF	Condition value will be displayed	-
D LOCK POS SW	Driver's door lock position switch signal / ON or OFF	ON: Driver's door lock is in unlock position OFF: Driver's door lock is in lock position	-

Item	Measurement Item / Display (Range)	Normal Condition	Diagnostic Note
LIGHTING TIME	Lighting time / 7.5s, 15s or 30s	Customized value will be displayed	-
I/L AUTO OFF	Battery saver / ON or OFF	Customized value will be displayed	-
I/L ON/ACC OFF	Light the I/L when ACC OFF / ON or OFF	Customized value will be displayed	-
I/L ON /UNLK	Interior light ON W/Unlock / ON or OFF	Customized value will be displayed	-
SENSITIVITY	Turn on luminous intensity / DARK1, DARK2, NORMAL, LIGHT1, LIGHT2	Customized value will be displayed	-
DISP EX ON SEN	Display extinction luminous intensity / DARK1, DARK2, NORMAL, LIGHT1, LIGHT2	Customized value will be displayed	-
DISP EX OFF SEN	Display extinction release luminous intensity / DARK1, DARK2, NORMAL, LIGHT1, LIGHT2	Customized value will be displayed	-
DRL FUNCTION*	DRL function / ON or OFF	Customized value will be displayed	-

HINT:
*: w/ Daytime running light

2. PERFORM ACTIVE TEST

HINT:
Performing the intelligent tester's ACTIVE TEST allows relay, VSV, actuator and other items to be operated without removing any parts. Performing the ACTIVE TEST early in troubleshooting is one way to save time. The DATA LIST can be displayed during the ACTIVE TEST.

(a) Connect the intelligent tester (with CAN VIM) to the DLC3.
(b) Turn the power switch ON (IG).
(c) Perform the ACTIVE TEST according to the display on the tester.

Main body ECU

Item	Test Details	Diagnostic Note
HAZARD	Turn hazard light flasher relay ON / OFF	-
F FOG LIGHT	Turn front fog light relay ON / OFF	-
HEAD LIGHT	Turn headlight relay ON / OFF	-
HEAD LIGHT (HI)	Turn headlight dimmer relay (headlight dimmer switch HIGH position) ON / OFF	-
TAIL LIGHT	Turn taillight relay ON / OFF	-
DRL RELAY	(Test Details) Turn daytime running light relay ON / OFF (Vehicle Condition) Power switch ON (IG), engine is stopped and light control switch is in OFF	-
DIMMER SIG	Turn dimmer relay ON / OFF	-
ILLUMI OUTPUT	(Test Details) Turn daytime light and key illumination ON / OFF (Vehicle Condition) Doors are closed	-

DIAGNOSTIC TROUBLE CODE CHART

HINT:
If a trouble code is displayed during the DTC check, check the circuit listed for that code in the table below.

Lighting system

DTC No.	Detection Item	Suspected Area	See page
B1244	Light Sensor Circuit Malfunction	- Automatic light control sensor - Wire harness - Main body ECU	LI-31

DTC	B1244	Light Sensor Circuit Malfunction

DESCRIPTION

This DTC is output when a failure in the light sensor circuit is detected.

DTC No.	DTC Detection Condition	Trouble Area
B1244	When either condition below is met: • Malfunction in automatic light control sensor • Open or short in automatic light control sensor circuit	• Automatic light control sensor • Wire harness • Main body ECU

WIRING DIAGRAM

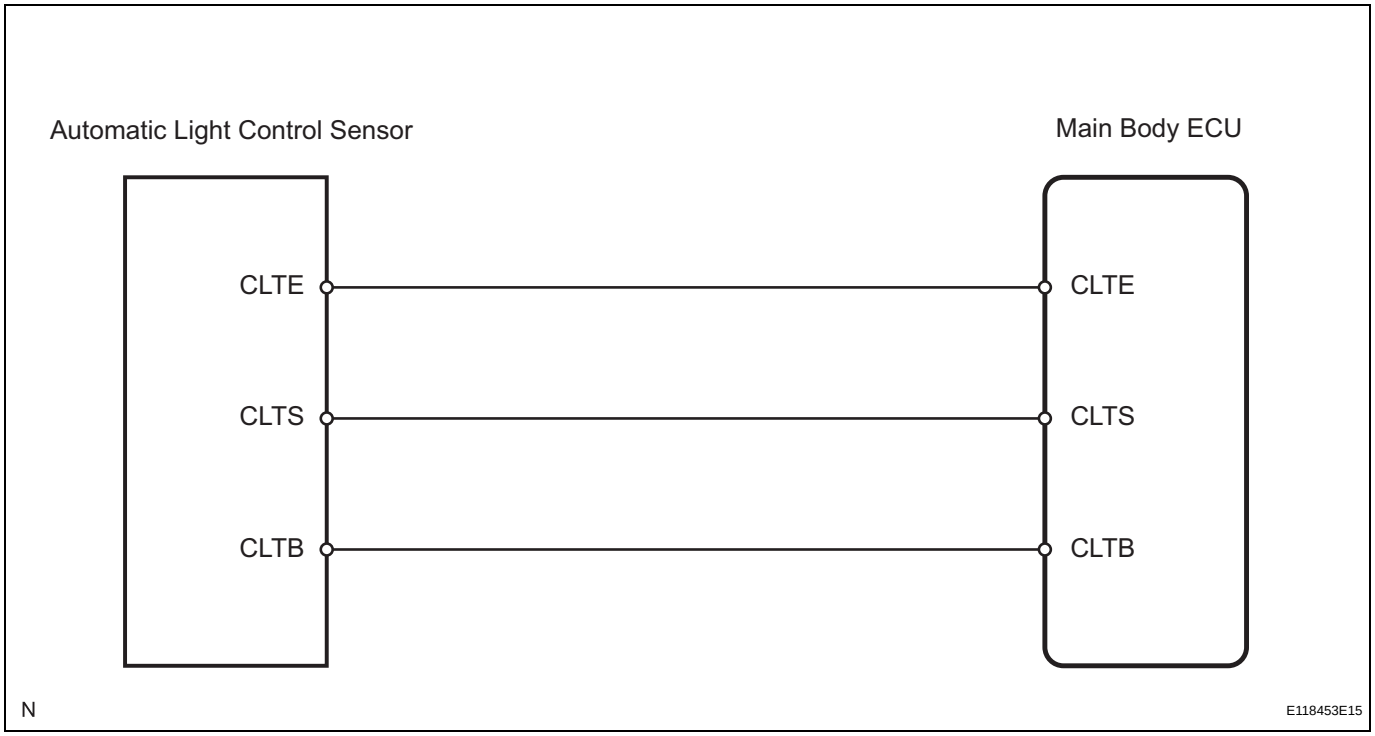

INSPECTION PROCEDURE

1	CHECK BODY ECU

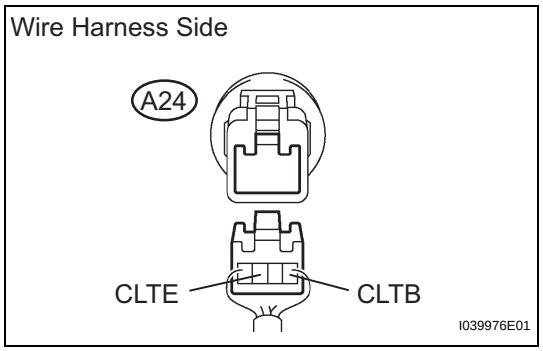

(a) Disconnect the A24 sensor connector.
(b) Measure the voltage of the wire harness side connector.
Standard voltage

Tester Connection	Condition	Specified Condition
1 (CLTB) - 3 (CLTE)	Power switch ON (IG)	10 to 14 V

N G → **Go to step 4**

OK

2 CHECK WIRE HARNESS (SENSOR - ECU)

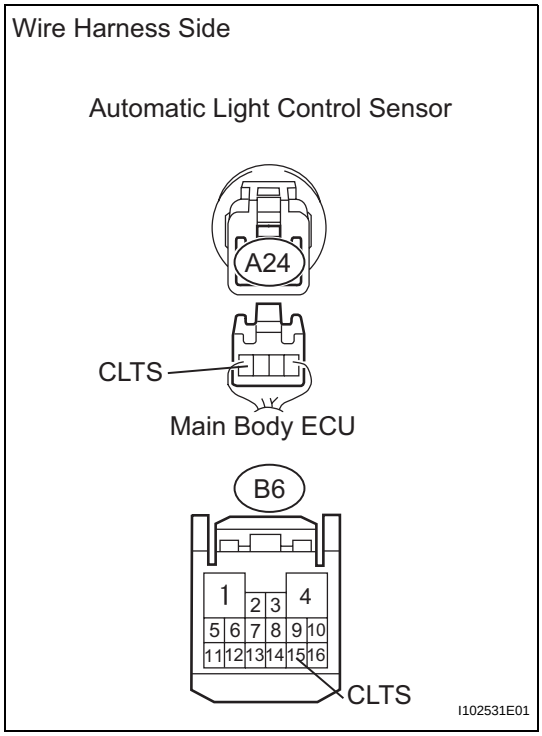

(a) Disconnect the A24 sensor connector.
(b) Disconnect the B6 ECU connector.
(c) Measure the resistance of the wire harness side connectors.
Standard resistance

Tester Connection	Specified Condition
A24-4 (CLTS) - B6-15 (CLTS)	Below 1 Ω

NG → **REPAIR OR REPLACE HARNESS AND CONNECTOR**

OK

3 REPLACE AUTOMATIC LIGHT CONTROL SENSOR

OK:
Returns to normal operation.

NG → **REPLACE DRIVER SIDE JUNCTION BLOCK (MAIN BODY ECU)**

OK

END

4 CHECK WIRE HARNESS (SENSOR - BODY GROUND)

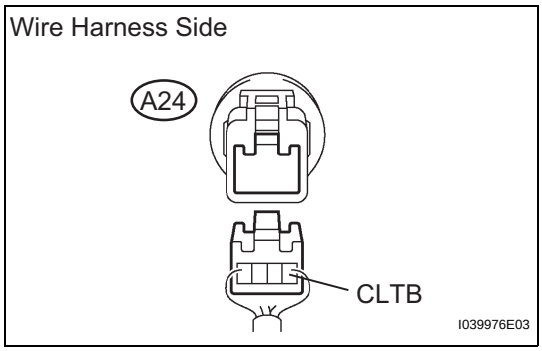

(a) Disconnect the A24 ECU connector.
(b) Measure the voltage of the wire harness side connector.
Standard voltage

Tester Connection	Condition	Specified Condition
A24-1 (CLTB) - Body ground	Power switch ON (IG)	10 to 14 V

NG → **Go to step 6**

OK

5	CHECK WIRE HARNESS (SENSOR - ECU)

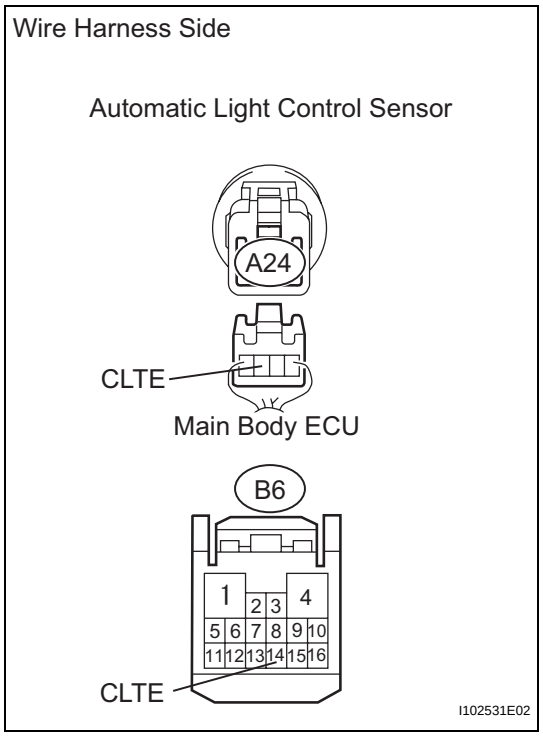

(a) Disconnect the A24 sensor connector.
(b) Disconnect the B6 ECU connector.
(c) Measure the resistance of the wire harness side connectors.

Standard resistance

Tester Connection	Specified Condition
A24-3 (CLTE) - B6-14 (CLTE)	Below 1 Ω

NG → **REPAIR OR REPLACE HARNESS AND CONNECTOR**

LI

OK

REPLACE DRIVER SIDE JUNCTION BLOCK (MAIN BODY ECU)

6	CHECK WIRE HARNESS (SENSOR - ECU)

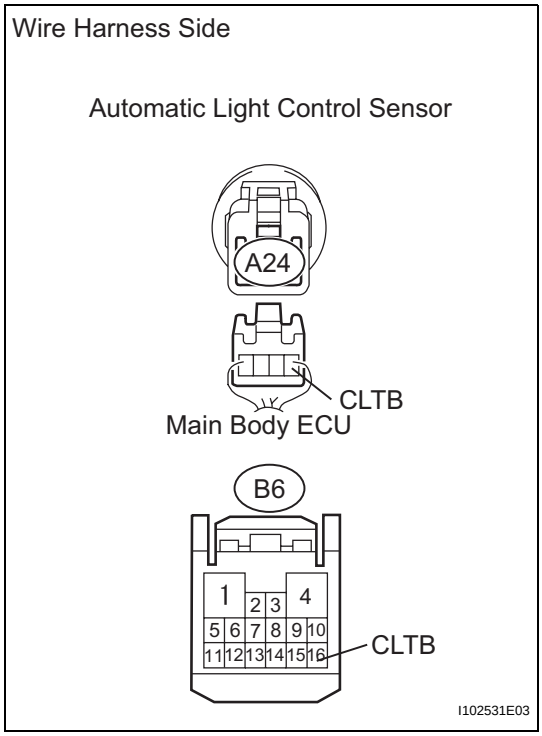

(a) Disconnect the A24 sensor connector.
(b) Disconnect the B6 ECU connector.
(c) Measure the resistance of the wire harness side connectors.

Standard resistance

Tester Connection	Specified Condition
A24-1 (CLTB) - B6-16 (CLTB)	Below 1 Ω

NG → **REPAIR OR REPLACE HARNESS AND CONNECTOR**

OK

REPLACE DRIVER SIDE JUNCTION BLOCK (MAIN BODY ECU)

Vehicle Speed Signal Circuit

DESCRIPTION

Headlight beam level control ECU receives the vehicle speed signal from the combination meter.

WIRING DIAGRAM

INSPECTION PROCEDURE

HINT:
Check if the combination meter operation is normal before performing the following procedure.

1 CHECK HEADLIGHT BEAM LEVEL CONTROL ECU (SPEED VOLTAGE)

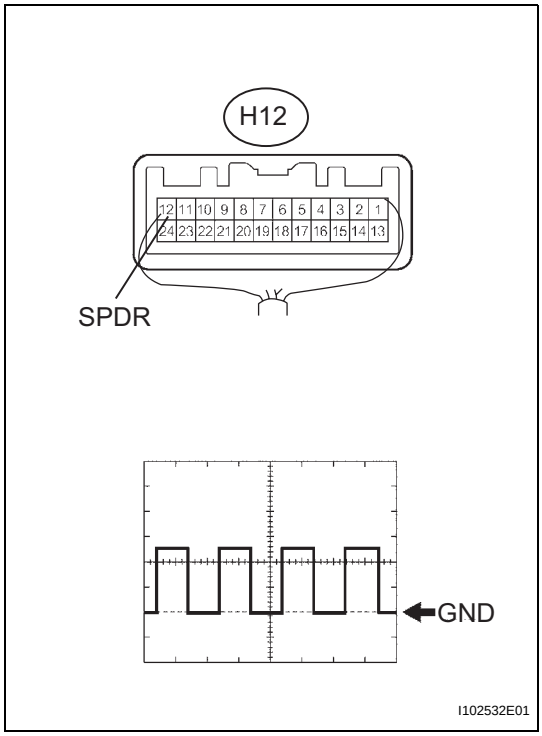

(a) Measure the voltage of the wire harness side connector.
Standard voltage

Tester Connection	Tool Setting	Condition	Specified Condition
H12-12 (SPDR) - Body ground	5 V / DIV., 2 msec. / DIV.	Vehicle is driving approx. 30 km/h (19 mph)	0 to 14 V Pulse generation (See waveform 1)

OK:
Waveform is output as shown in the illustration.

OK → **PROCEED TO NEXT CIRCUIT INSPECTION SHOWN IN PROBLEM SYMPTOMS TABLE**

NG

2 CHECK WIRE HARNESS (ECU - METER)

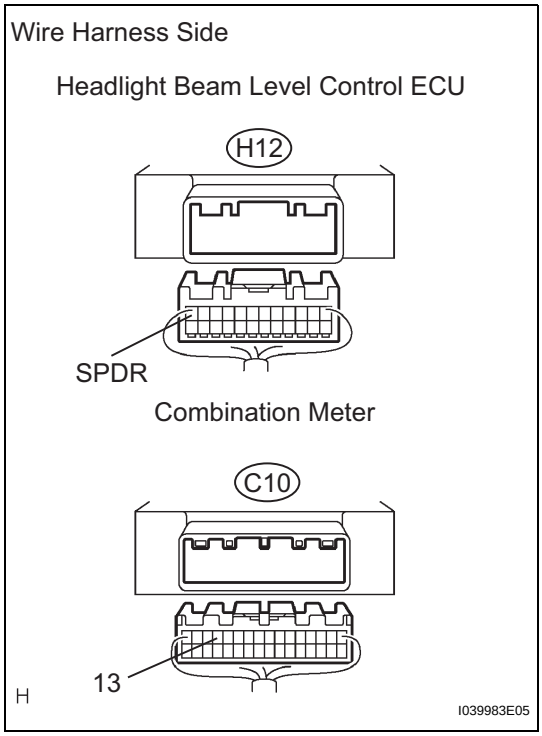

(a) Disconnect the H12 ECU connector.
(b) Disconnect the C10 meter connector.
(c) Measure the resistance of the wire harness side connectors.
Standard resistance

Tester Connection	Specified Condition
H12-12 (SPDR) - C10-13	Below 1 Ω
H12-12 (SPDR) - Body ground	10 kΩ or higher

NG → **REPAIR OR REPLACE HARNESS AND CONNECTOR**

OK

REPLACE COMBINATION METER

Headlight Relay Circuit

DESCRIPTION

The main body ECU controls H-LP relay and DIM relay when signals are received from the combination switch.

WIRING DIAGRAM

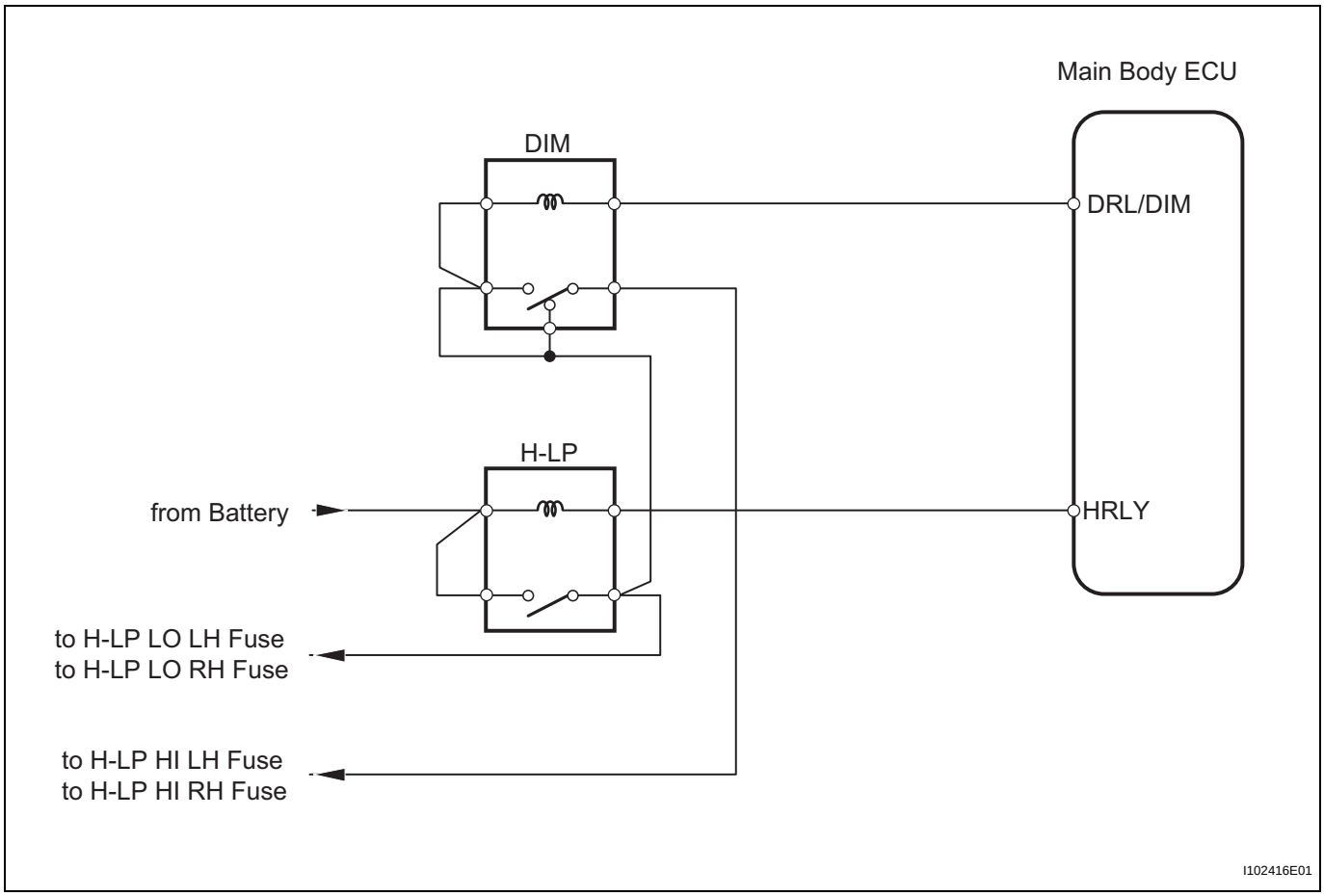

INSPECTION PROCEDURE

1	PERFORM ACTIVE TEST BY INTELLIGENT TESTER (HEADLIGHT)

(a) Select the ACTIVE TEST, use the intelligent tester (with CAN VIM) to generate a control command, and then check that the headlight illuminates.

Main body ECU

Item	Test Details	Diagnostic Note
HEAD LIGHT	Turn headlight relay ON / OFF	-
HEAD LIGHT (HI)	Turn headlight dimmer relay (headlight dimmer switch in HIGH position) ON / OFF	-

OK:
Headlight turns on.

OK → **PROCEED TO NEXT CIRCUIT INSPECTION SHOWN IN PROBLEM SYMPTOMS TABLE**

NG

2 CHECK WIRE HARNESS (ECU - BODY GROUND)

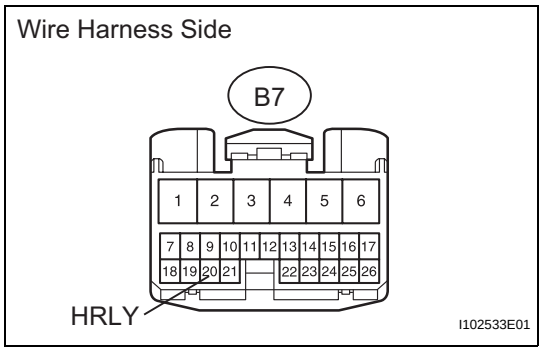

(a) Disconnect the B7 ECU connector.
(b) Using a service wire, connect B7-20 (HRLY) of the wire harness side and body ground.
OK:
Headlight (Low beam) turns on.

NG → **Go to step 4**

OK

3 CHECK WIRE HARNESS (ECU - BODY GROUND)

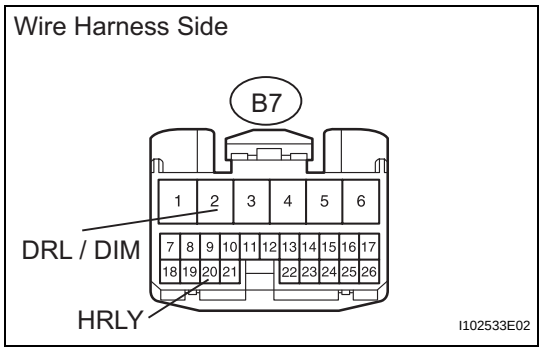

(a) Disconnect the B7 ECU connector.
(b) Using a service wire, connect B7-20 (HRLY) of the wire harness side and body ground.
(c) Using a service wire, connect B7-2 (DRL/DIM) of the wire harness side and body ground.
OK:
Headlight (High beam) turns on.

NG → **Go to step 5**

OK

PROCEED TO NEXT CIRCUIT INSPECTION SHOWN IN PROBLEM SYMPTOMS TABLE

4 CHECK WIRE HARNESS (ECU - BATTERY)

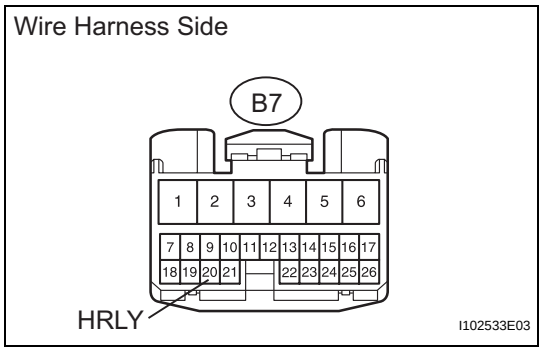

(a) Disconnect the B7 ECU connector.
(b) Measure the voltage of the wire harness side connector.
Standard voltage

Tester Connection	Specified Condition
B7-20 (HRLY) - Body ground	10 to 14 V

NG → **REPAIR OR REPLACE HARNESS AND CONNECTOR (DRIVER SIDE JUNCTION BLOCK - BATTERY)**

OK

REPAIR OR REPLACE HARNESS AND CONNECTOR (EACH HEADLIGHT (LOW BEAM) CIRCUIT)

5	CHECK WIRE HARNESS (ECU - BATTERY)

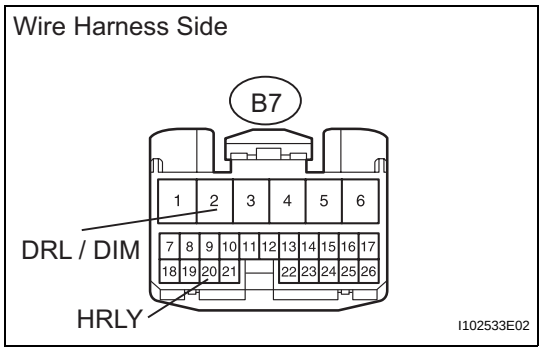

(a) Disconnect the B7 ECU connector.
(b) Using a service wire, connect B7-20 (HRLY) of the wire harness side and body ground.
(c) Measure the voltage of the wire harness side connector.
Standard voltage

Tester Connection	Specified Condition
B7-2 (DRL/DIM) - Body ground	10 to 14 V

NG → **REPAIR OR REPLACE HARNESS AND CONNECTOR (DRIVER SIDE JUNCTION BLOCK - ENGINE ROOM RELAY BLOCK AND JUNCTION BLOCK)**

OK

REPAIR OR REPLACE HARNESS AND CONNECTOR (EACH HEADLIGHT (HIGH BEAM) CIRCUIT)

Daytime Running Light Relay Circuit

DESCRIPTION

The main body ECU controls the DRL NO. 4 relay. The DRL NO. 4 relay connects the daytime running light relay and the headlight during operation. The daytime running light relay controls the illuminance of the headlight accordingly.

WIRING DIAGRAM

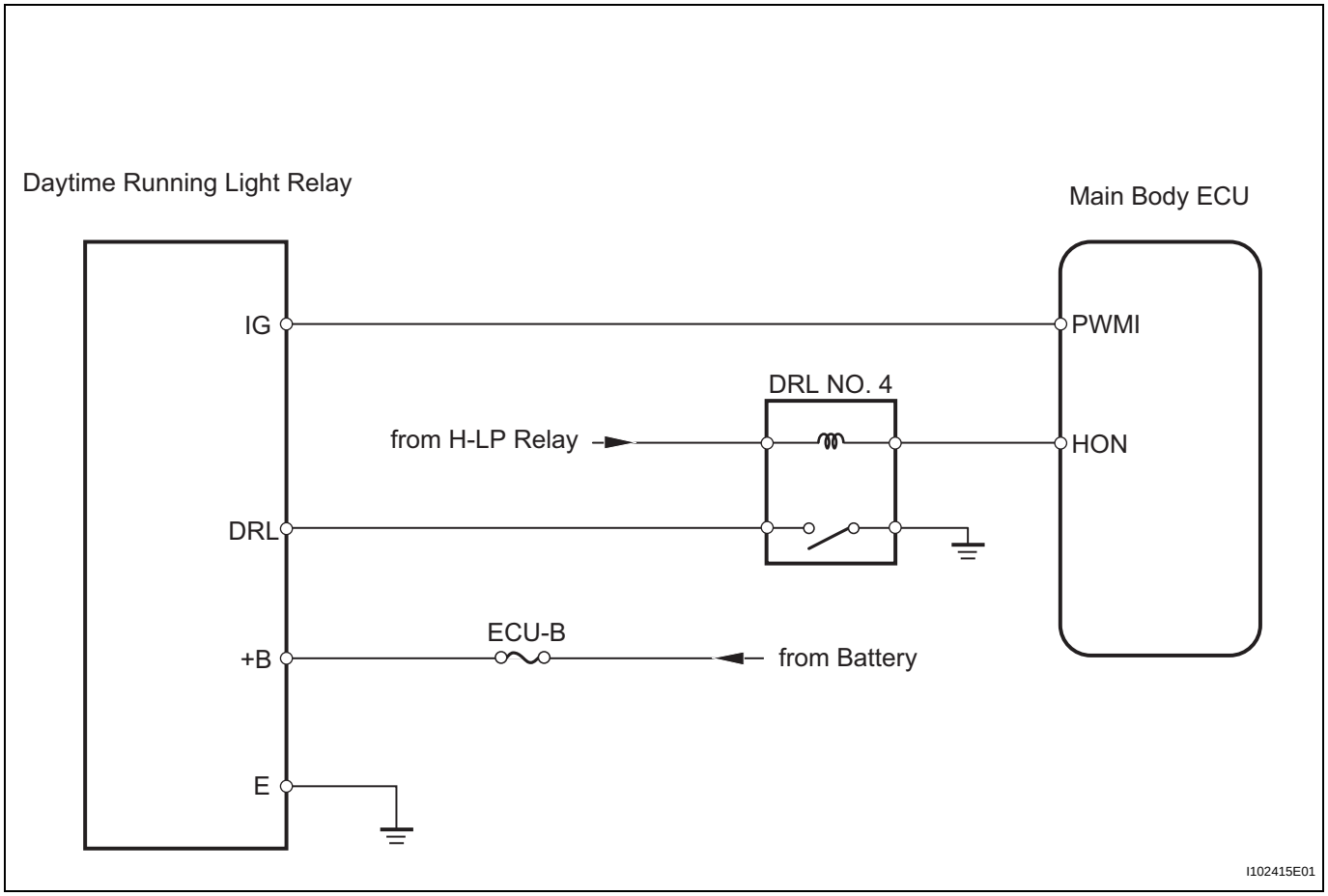

INSPECTION PROCEDURE

HINT:
Check if the headlight (low beam and high beam) is normal before performing the following procedure.

1	PERFORM ACTIVE TEST BY INTELLIGENT TESTER (DAYTIME RUNNING LIGHT RELAY)

(a) Select the ACTIVE TEST, use the intelligent tester (with CAN VIM) to generate a control command, and then check that the headlight illuminates.

Main body ECU

Item	Test Details	Diagnostic Note
DRL RELAY	(Test Details) Turn daytime running light relay ON / OFF (Vehicle Condition) Power switch ON (IG), engine is stopped and light control switch is in off	-

OK:
Headlight (High beam) comes on.

OK → **PROCEED TO NEXT CIRCUIT INSPECTION SHOWN IN PROBLEM SYMPTOMS TABLE**

NG

2 CHECK DAYTIME RUNNING LIGHT RELAY

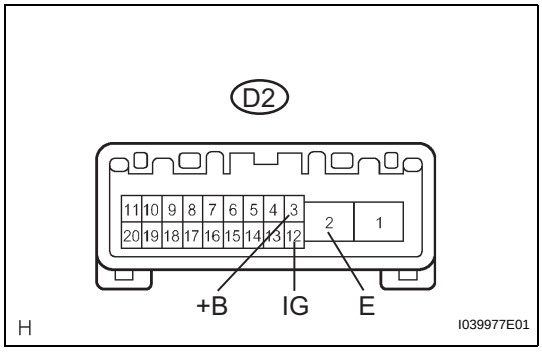

(a) Measure the voltage of the relay connector.
Standard voltage

Tester Connection	Condition	Specified Condition
D2-2 (E) - D2-3 (+B)	Always	10 to 14 V
D2-2 (E) - D2-12 (IG)	Engine is running and parking brake is released	

NG → **Go to step 4**

OK

3 CHECK WIRE HARNESS (ECU - BATTERY)

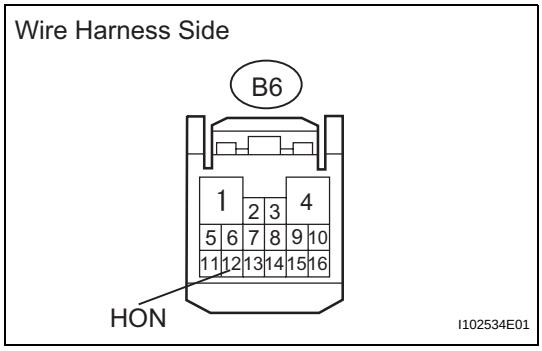

(a) Disconnect the B6 ECU connector.
(b) Measure the voltage of the wire harness side connector.
Standard voltage

Tester Connection	Condition	Specified Condition
B6-12 (HON) - Body ground	Light control switch in HEAD	Below 1 V
	Light control switch not in HEAD	10 to 14 V

NG → **REPAIR OR REPLACE HARNESS AND CONNECTOR**

OK

PROCEED TO NEXT CIRCUIT INSPECTION SHOWN IN PROBLEM SYMPTOMS TABLE

4 CHECK WIRE HARNESS (DAYTIME RUNNING LIGHT RELAY - BODY GROUND)

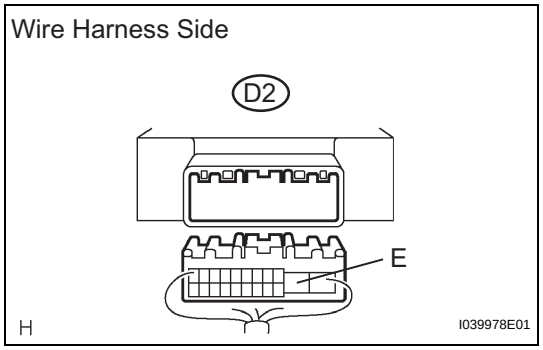

(a) Disconnect the D2 relay connector.
(b) Measure the resistance of the wire harness side connector.
Standard resistance

Tester Connection	Specified Condition
D2-2 (E) - Body ground	Below 1 Ω

NG → **REPAIR OR REPLACE HARNESS AND CONNECTOR**

OK

5 CHECK WIRE HARNESS (DAYTIME RUNNING LIGHT RELAY - BATTERY)

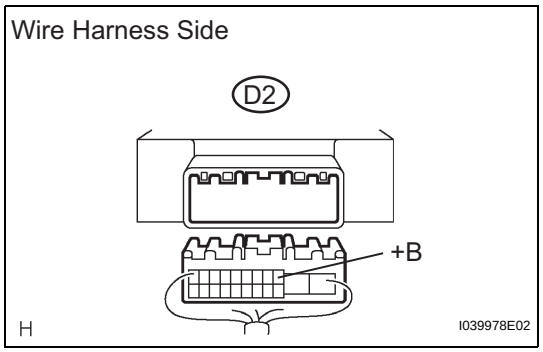

(a) Disconnect the D2 relay connector.
(b) Measure the voltage of the wire harness side connector.
Standard voltage

Tester Connection	Specified Condition
D2-3 (+B) - Body ground	10 to 14 V

NG → **REPAIR OR REPLACE HARNESS AND CONNECTOR**

OK

6	CHECK DRIVER SIDE JUNCTION BLOCK (MAIN BODY ECU)

Driver Side Junction Block (Main Body ECU)

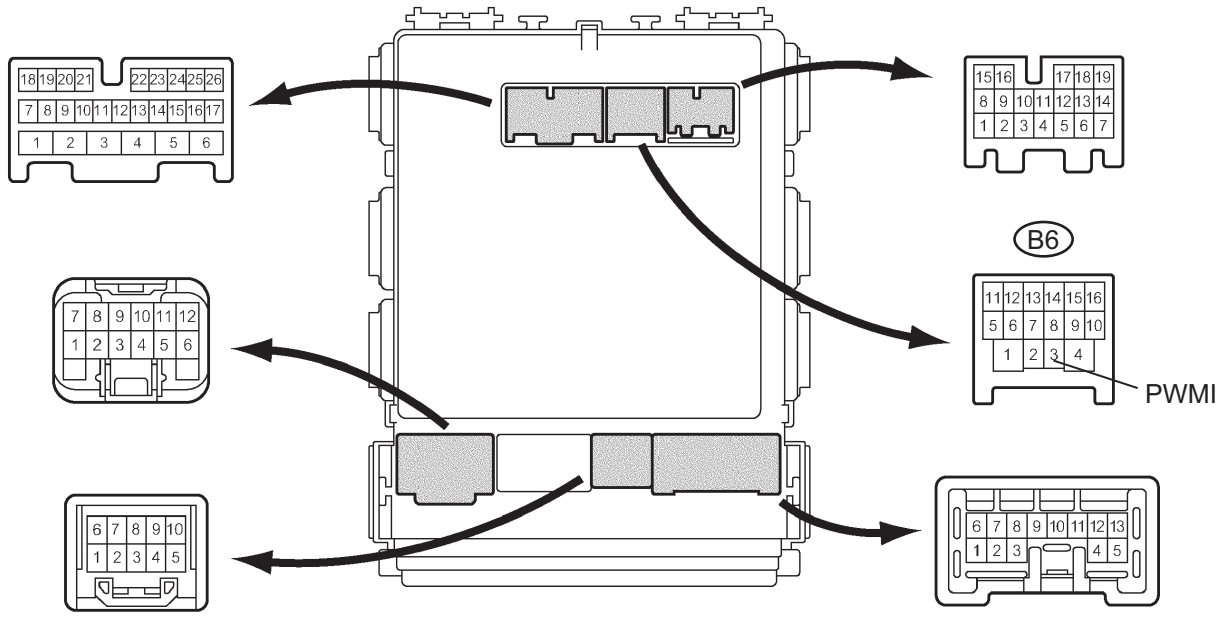

(a) Measure the voltage of the connector.
Standard voltage

Tester Connection	Condition	Specified Condition
B6-3 (PWMI) - Body ground	Light control switch in HEAD	Below 1 V
	Engine is running and parking brake is released	10 to 14 V

NG → **PROCEED TO NEXT CIRCUIT INSPECTION SHOWN IN PROBLEM SYMPTOMS TABLE**

OK

REPAIR OR REPLACE HARNESS AND CONNECTOR (DRIVER SIDE JUNCTION BLOCK - DAYTIME RUNNING LIGHT RELAY)

Light Control Switch Circuit

DESCRIPTION

This circuit detects the state of the combination switch.

WIRING DIAGRAM

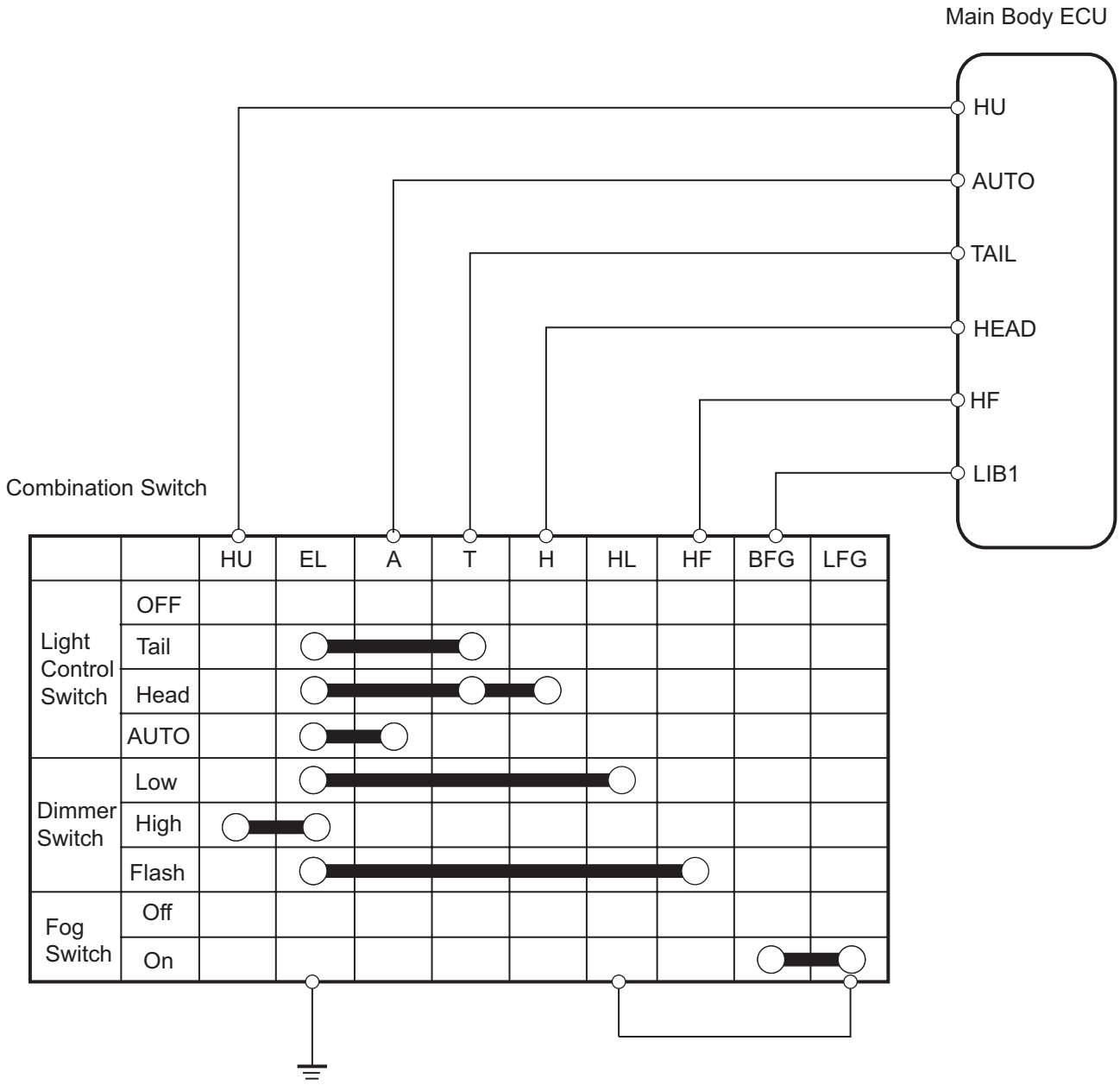

1	READ VALUE OF INTELLIGENT TESTER (COMBINATION SWITCH)

(a) Check the DATA LIST for the proper functioning of the combination switch.

Main body ECU

Item	Measurement Item / Display (Range)	Normal Condition	Diagnostic Note
DIMMER SW	Headlight dimmer switch signal / ON or OFF	ON: Headlight dimmer switch is in HIGH or FLASH position OFF: Headlight dimmer switch is in LOW position	-
HIGH FLASHER SW	Headlight dimmer switch signal / ON or OFF	ON: Headlight dimmer switch is in FLASH position OFF: Headlight dimmer switch is in except FLASH position	-
AUTO LIGHT SW	Auto light switch signal / ON or OFF	ON: Light control switch is in AUTO position OFF: Light control switch is in except AUTO position	-
HEAD LIGHT SW	Headlight control switch signal / ON or OFF	ON: Light control switch is in HEAD position OFF: Light control switch is in except HEAD position	-
TAIL LIGHT SW	Taillight switch signal / ON or OFF	ON: Light control switch is in TAIL or HEAD position OFF: Light control switch is not in TAIL or HEAD position	-

OK → **PROCEED TO NEXT INSPECTION PROCEDURE SHOWN IN PROBLEM SYMPTOMS TABLE**

NG

2	CHECK WIRE HARNESS (ECU - BODY GROUND)

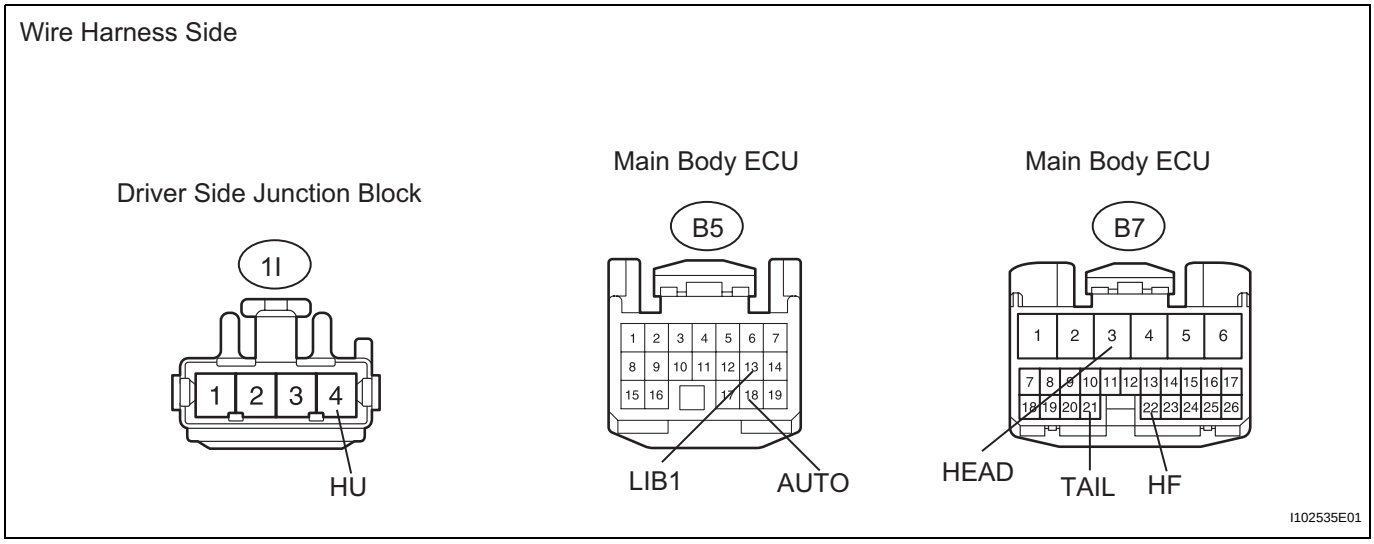

(a) Disconnect the 1I junction block connector.
(b) Disconnect the B5 and B7 ECU connectors.

(c) Measure the resistance of the wire harness side connectors.

Standard resistance

Tester Connection	Condition	Specified Condition
1I-4 (HU) - Body ground	Headlight dimmer switch LOW	10 kΩ or higher
	Headlight dimmer switch HIGH	Below 1 Ω
B5-13 (LIB1) - Body ground	Fog switch OFF	10 kΩ or higher
	Fog switch AUTO	Below 1 Ω
B5-18 (AUTO) - Body ground	Light control switch OFF	10 kΩ or higher
	Light control switch AUTO	Below 1 Ω
B7-3 (HEAD) - Body ground	Light control switch OFF	10 kΩ or higher
	Light control switch HEAD	Below 1 Ω
B7-21 (TAIL) - Body ground	Light control switch OFF	10 kΩ or higher
	Light control switch TAIL	Below 1 Ω
B7-22 (HF) - Body ground	Headlight dimmer switch LOW	10 kΩ or higher
	Headlight dimmer switch FLASH	Below 1 Ω

OK → **PROCEED TO NEXT INSPECTION PROCEDURE SHOWN IN PROBLEM SYMPTOMS TABLE**

NG

3 INSPECT COMBINATION SWITCH

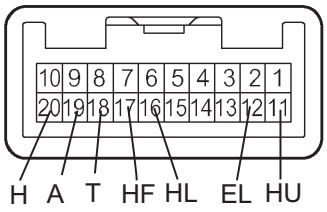

E068152E05

(a) Inspect light control switch.

(1) Measure the resistance of the switch.

Standard resistance

Tester Connection	Switch Condition	Specified Condition
12 (EL) - 18 (T) 12 (EL) - 19 (A) 12 (EL) - 20 (H)	OFF	10 kΩ or higher
12 (EL) - 18 (T)	TAIL	Below 1 Ω
12 (EL) - 18 (T) 12 (EL) - 20 (H)	HEAD	
12 (EL) - 19 (A)	AUTO	

(b) Inspect headlight dimmer switch.

(1) Measure the resistance of the switch.

Standard resistance

Tester Connection	Switch Condition	Specified Condition
11 (HU) - 12 (EL) 12 (EL) - 17 (HF)	FLASH	Below 1 Ω
12 (EL) - 16 (HL)	Low	
11 (HU) - 12 (EL)	High	

LI

(c) Inspect fog switch.

(1) Measure the resistance of the switch.

Standard resistance

Tester Connection	Switch Condition	Specified Condition
4 (BFG) - 3 (LFG)	ON	Below 1 Ω
	OFF	10 kΩ or higher

NG → **REPLACE COMBINATION SWITCH**

OK

REPAIR OR REPLACE HARNESS AND CONNECTOR

Headlight Signal Circuit

DESCRIPTION

Headlight beam level control ECU receives the H-LP relay operation signal from HEAD signal.

WIRING DIAGRAM

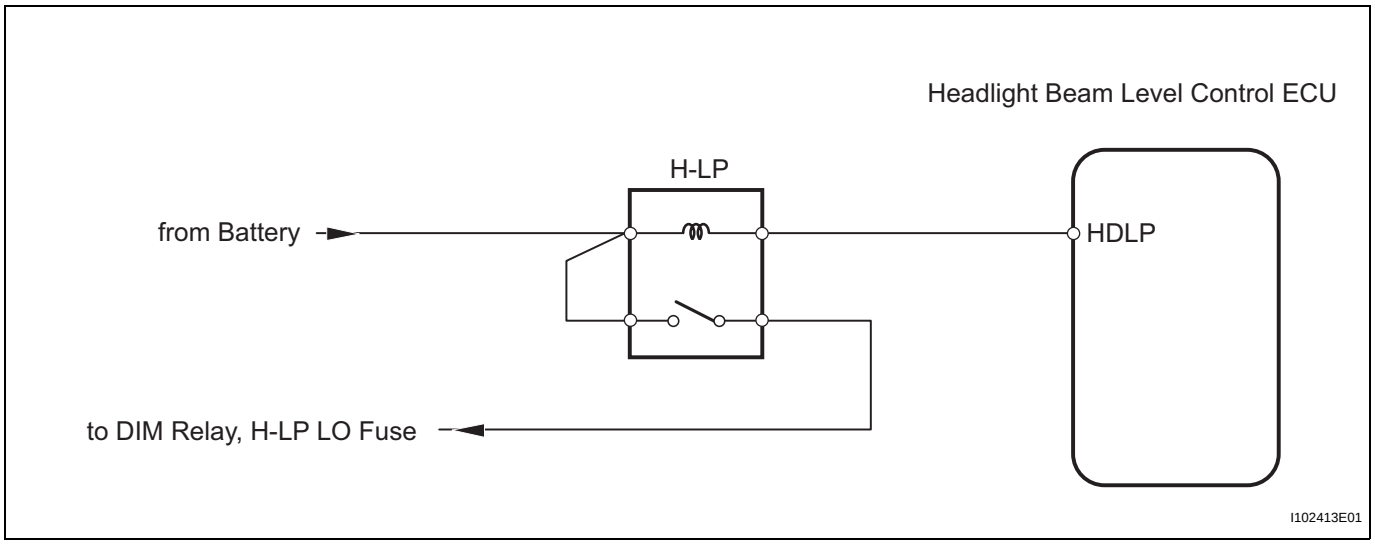

INSPECTION PROCEDURE

HINT:
First, check if the headlight operation is normal before performing the following procedure.

1	CHECK HEADLIGHT BEAM LEVEL CONTROL ECU (HDLP VOLTAGE)

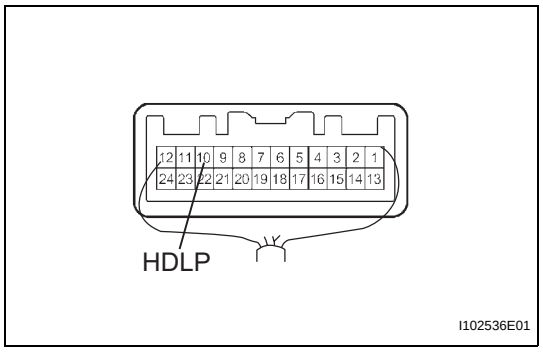

(a) Measure the voltage of the connector.
Standard voltage

Tester Connection	Condition	Specified Condition
H12-10 (HDLP) - Body ground	Light control switch OFF	10 to 14 V
	Light control switch in HEAD	Below 1 V

NG → **REPAIR OR REPLACE HARNESS AND CONNECTOR (HEADLIGHT BEAM LEVEL CONTROL ECU - H-LP RELAY)**

OK

PROCEED TO NEXT CIRCUIT INSPECTION SHOWN IN PROBLEM SYMPTOMS TABLE

Automatic Light Control Sensor Circuit

DESCRIPTION

The main body ECU receives signals from the automatic light control sensor.
HINT:
A DTC is output when the automatic light control sensor is malfunctioning or there is an open or short circuit in the automatic light control sensor (see page LI-31).

WIRING DIAGRAM

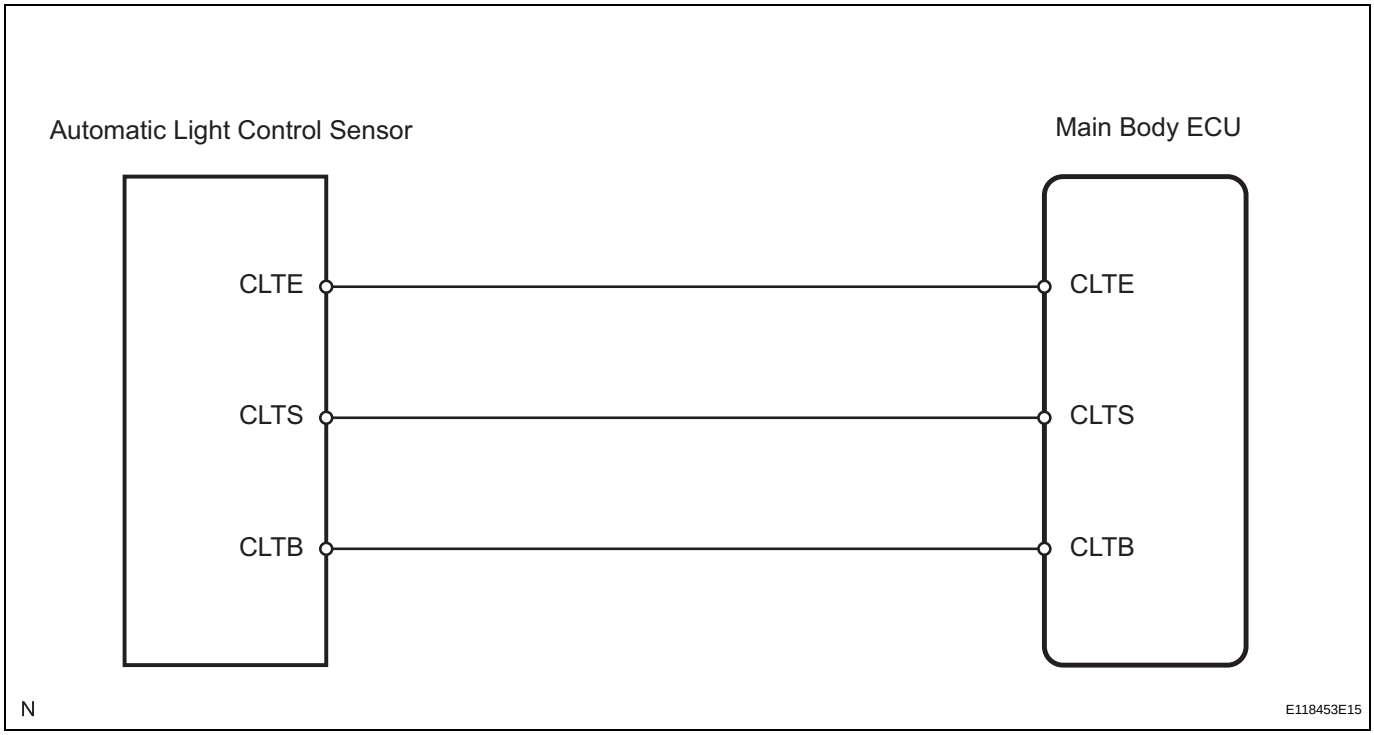

INSPECTION PROCEDURE

1	CHECK BODY ECU

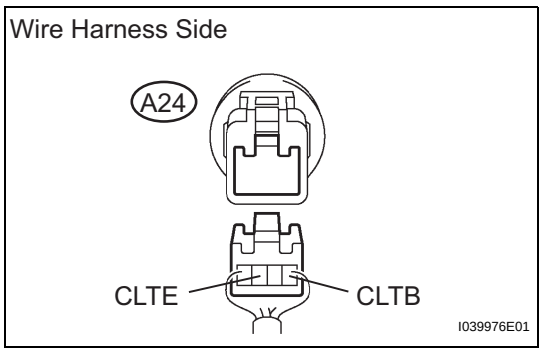

(a) Disconnect the A24 sensor connector.
(b) Measure the voltage of the wire harness side connector.
Standard voltage

Tester Connection	Condition	Specified Condition
1 (CLTB) - 3 (CLTE)	Power switch ON (IG)	10 to 14 V

NG → **Go to step 4**

OK

2 CHECK WIRE HARNESS (ECU - SENSOR)

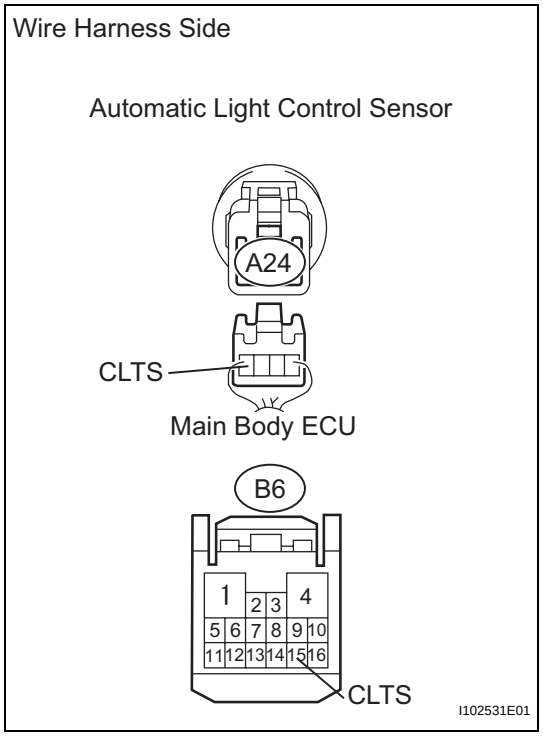

(a) Disconnect the A24 sensor connector.
(b) Disconnect the B6 ECU connector.
(c) Measure the resistance of the wire harness side connectors.
Standard resistance

Tester Connection	Specified Condition
A24-4 (CLTS) - B6-15 (CLTS)	Below 1 Ω

NG → **REPAIR OR REPLACE HARNESS AND CONNECTOR**

OK

3 REPLACE AUTOMATIC LIGHT CONTROL SENSOR

OK:
Returns to normal operation.

NG → **PROCEED TO NEXT CIRCUIT INSPECTION SHOWN IN PROBLEM SYMPTOMS TABLE**

OK

END

4 CHECK WIRE HARNESS (SENSOR - BODY GROUND)

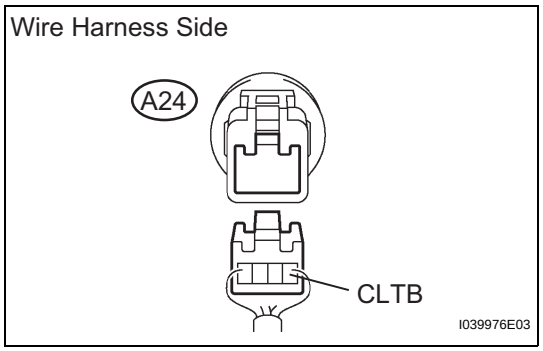

(a) Disconnect the A24 ECU connector.
(b) Measure the voltage of the wire harness side connector.
Standard voltage

Tester Connection	Condition	Specified Condition
A24-1 (CLTB) - Body ground	Power switch ON (IG)	10 to 14 V

NG → **Go to step 6**

LI

OK

5	CHECK WIRE HARNESS (ECU - SENSOR)

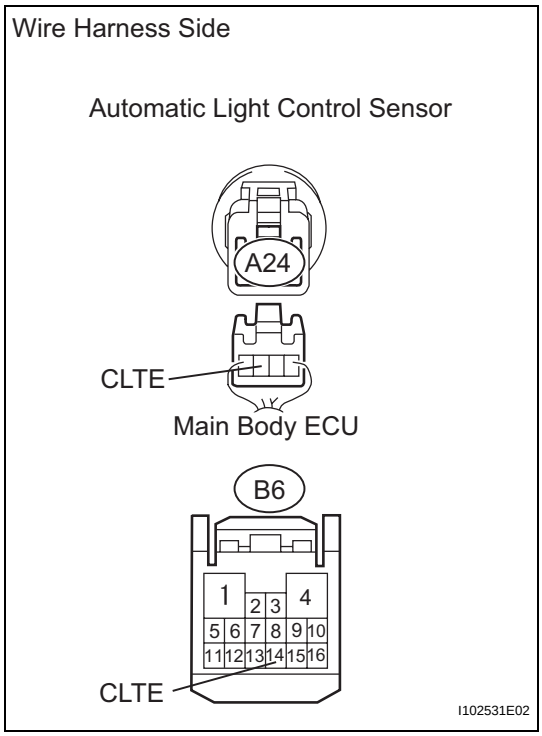

(a) Disconnect the A24 sensor connector.
(b) Disconnect the B6 ECU connector.
(c) Measure the resistance of the wire harness side connectors.

Standard resistance

Tester Connection	Specified Condition
A24-3 (CLTE) - B6-14 (CLTE)	Below 1 Ω

NG → **REPAIR OR REPLACE HARNESS AND CONNECTOR**

OK

PROCEED TO NEXT CIRCUIT INSPECTION SHOWN IN PROBLEM SYMPTOMS TABLE

6	**CHECK WIRE HARNESS (ECU - SENSOR)**

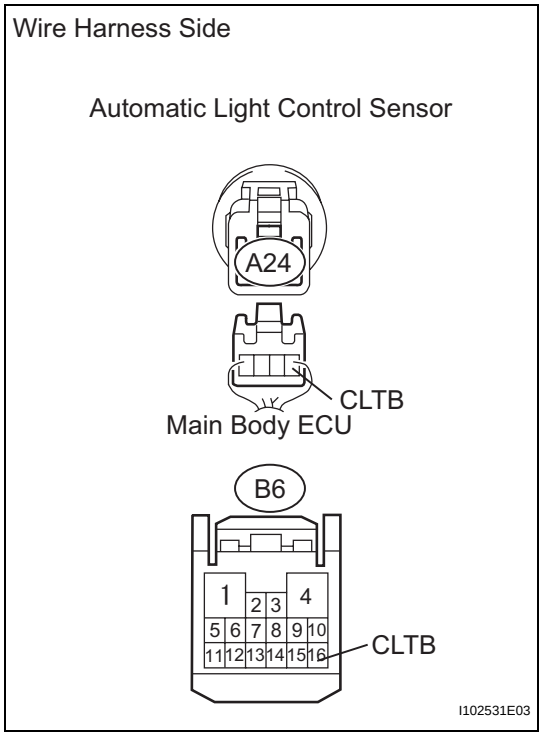

(a) Disconnect the A24 sensor connector.
(b) Disconnect the B6 ECU connector.
(c) Measure the resistance of the wire harness side connectors.

Standard resistance

Tester Connection	Specified Condition
A24-1 (CLTB) - B6-16 (CLTB)	Below 1 Ω

NG → **REPAIR OR REPLACE HARNESS AND CONNECTOR**

OK

PROCEED TO NEXT CIRCUIT INSPECTION SHOWN IN PROBLEM SYMPTOMS TABLE

LI

Door Courtesy Switch Circuit

DESCRIPTION

The main body ECU detects the condition of the door courtesy switch.

WIRING DIAGRAM

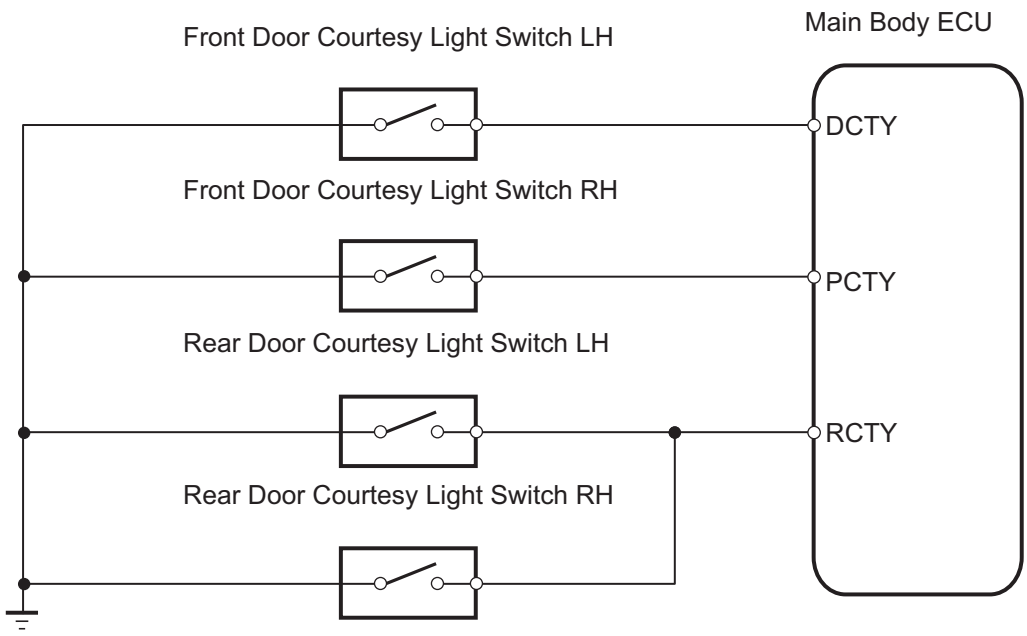

INSPECTION PROCEDURE

HINT:
The procedure for each door courtesy switch circuit is the same. First, inspect the suspected door courtesy switch circuit.

1	READ VALUE OF INTELLIGENT TESTER (DOOR COURTESY LIGHT SWITCH)

(a) Check the DATA LIST for proper functioning of the transistor relay.

Main body ECU

Item	Measurement Item / Display (Range)	Normal Condition	Diagnostic Note
D DOR CTY SW	Driver door courtesy switch signal / ON or OFF	ON: Driver's door is open OFF: Driver's door is closed	-
P DOR CTY SW	Passenger door courtesy switch signal / ON or OFF	ON: Passenger's door is open OFF: Passenger's door is closed	-
Rr DOR CTY SW	Rear door courtesy switch signal / ON or OFF	ON: Either right or left door is open OFF: Both the right and left doors are closed	-

OK → **PROCEED TO NEXT CIRCUIT INSPECTION SHOWN IN PROBLEM SYMPTOMS TABLE**

NG

2 CHECK DRIVER SIDE JUNCTION BLOCK (BODY ECU)

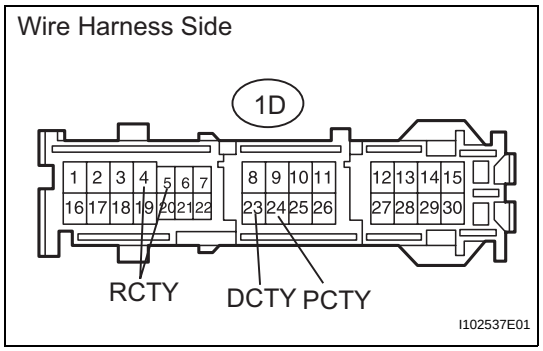

(a) Disconnect the 1D junction block connector.
(b) Measure the resistance of the wire harness side connector.

Standard resistance

Tester Connection	Condition	Specified Condition
1D-21 (DCTY) - Body ground	Driver door is open	Below 1 Ω
	Driver door is closed	10 kΩ or higher
1D-24 (PCTY) - Body ground	Front passenger door is open	Below 1 Ω
	Front passenger door is closed	10 kΩ or higher
1D-20 (RCTY) - Body ground	Rear RH door is open	Below 1 Ω
	Rear RH door is closed	10 kΩ or higher
1D-5 (RCTY) - Body ground	Rear LH door is open	Below 1 Ω
	Rear LH door is closed	10 kΩ or higher

OK → **PROCEED TO NEXT CIRCUIT INSPECTION SHOWN IN PROBLEM SYMPTOMS TABLE**

NG

3 INSPECT DOOR COURTESY LIGHT SWITCH

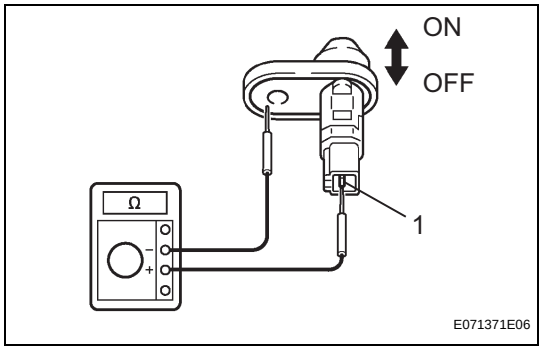

(a) Remove the courtesy light switch.
(b) Measure the resistance of the switch.

Standard resistance

Tester Connection	Condition	Specified Condition
1 - Body ground	OFF	10 kΩ or higher
	ON	Below 1 Ω

NG → **REPLACE DOOR COURTESY LIGHT SWITCH**

OK

REPAIR OR REPLACE HARNESS AND CONNECTOR (EACH COURTESY SWITCH CIRCUIT)

LI

Door LOCK Position Circuit

DESCRIPTION

This circuit detects the state of the door lock detection switch and sends it to the main body ECU.

WIRING DIAGRAM

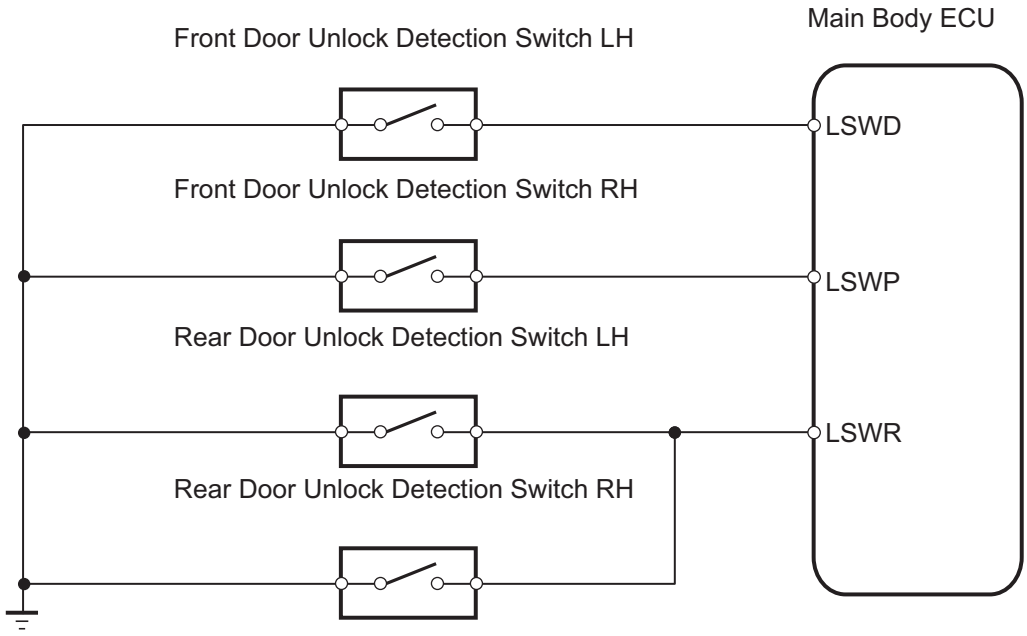

I102411E01

INSPECTION PROCEDURE

HINT:

- Before this procedure, check if the wireless door lock system operation is normal.
- Each door lock position circuit is the same procedure. First, inspect the suspected door lock position circuit.

1	READ VALUE OF INTELLIGENT TESTER (DOOR LOCK POSITION SWITCH)

(a) Check the DATA LIST for proper functioning of the transistor relay.

Main body ECU

Item	Measurement item / Display (Range)	Normal Condition	Diagnostic Note
D LOCK POS SW	Driver's door lock position switch signal / ON or OFF	ON: Driver door lock is in unlock position OFF: Driver door lock is in lock position	-
P LOCK POS SW	Front passenger's door lock position switch signal / ON or OFF	ON: Front passenger door lock is in unlock position OFF: Front passenger door lock is in lock position	-

OK → **PROCEED TO NEXT CIRCUIT INSPECTION SHOWN IN PROBLEM SYMPTOMS TABLE**

NG

2	CHECK DRIVER SIDE JUNCTION BLOCK (MAIN BODY ECU)

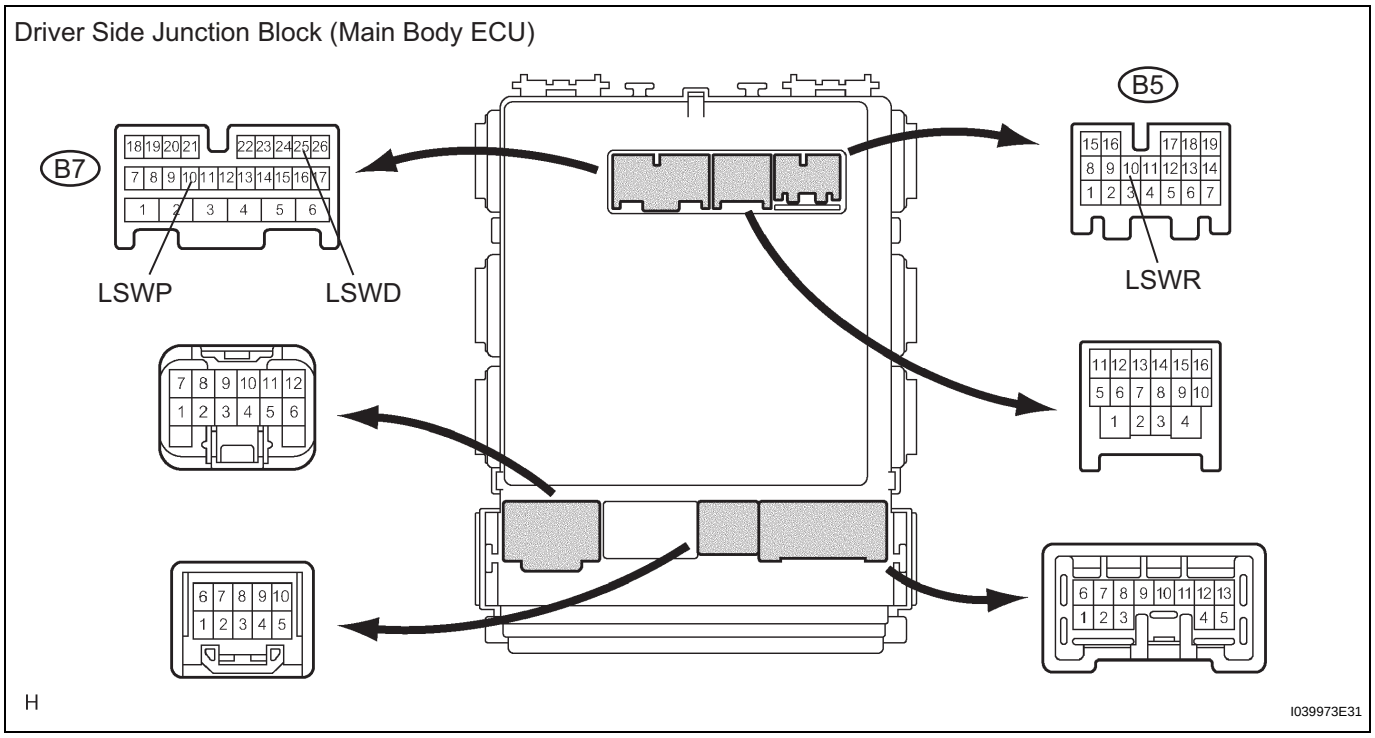

(a) Measure the voltage of the connector.
Standard voltage

Tester Connection	Condition	Specified Condition
B7-25 (LSWD) - Body ground	Driver side door is locked	Below 1 V
	Driver side door is unlocked	10 to 14 V
B7-10 (LSWP) - Body ground	Front passenger door is locked	Below 1 V
	Front passenger door is unlocked	10 to 14 V
B5-10 (LSWR) - Body ground	Both rear doors are locked	Below 1 V
	Both rear doors are unlocked	10 to 14 V

NG → **GO TO POWER DOOR LOCK CONTROL SYSTEM**

OK

PROCEED TO NEXT CIRCUIT INSPECTION SHOWN IN PROBLEM SYMPTOMS TABLE

LI

Taillight Relay Circuit

DESCRIPTION

The main body ECU controls the T-LP relay when a signal is received from the combination switch.

WIRING DIAGRAM

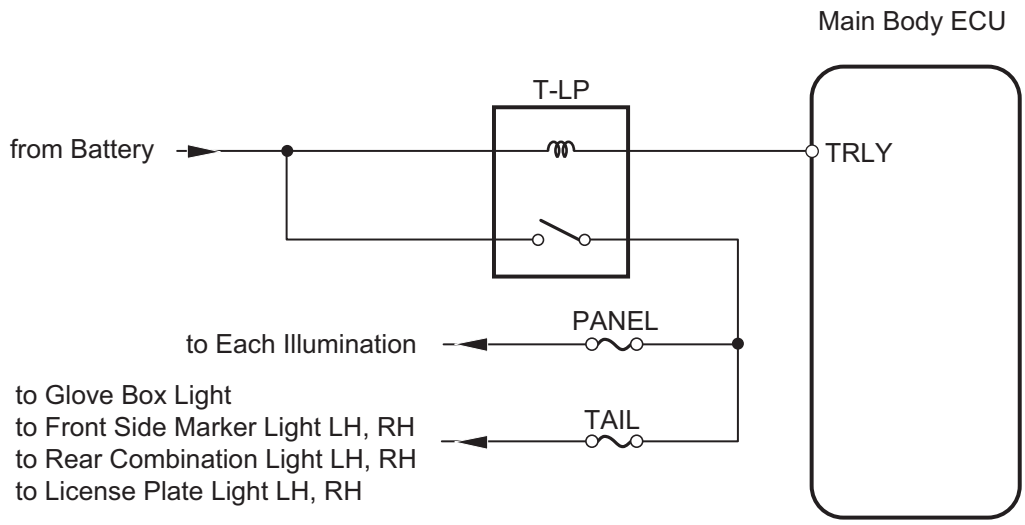

INSPECTION PROCEDURE

1	PERFORM ACTIVE TEST BY INTELLIGENT TESTER (TAILLIGHT)

(a) Select the ACTIVE TEST, use the intelligent tester (with CAN VIM) to generate a control command, and then check that the taillight illuminates.

Main body ECU

Item	Test Details	Diagnostic Note
TAIL LIGHT	Turn taillight relay ON / OFF	-

OK:
Each light comes on.

OK → **PROCEED TO NEXT CIRCUIT INSPECTION SHOWN IN PROBLEM SYMPTOMS TABLE**

NG

2	**CHECK DRIVER SIDE JUNCTION BLOCK (MAIN BODY ECU)**

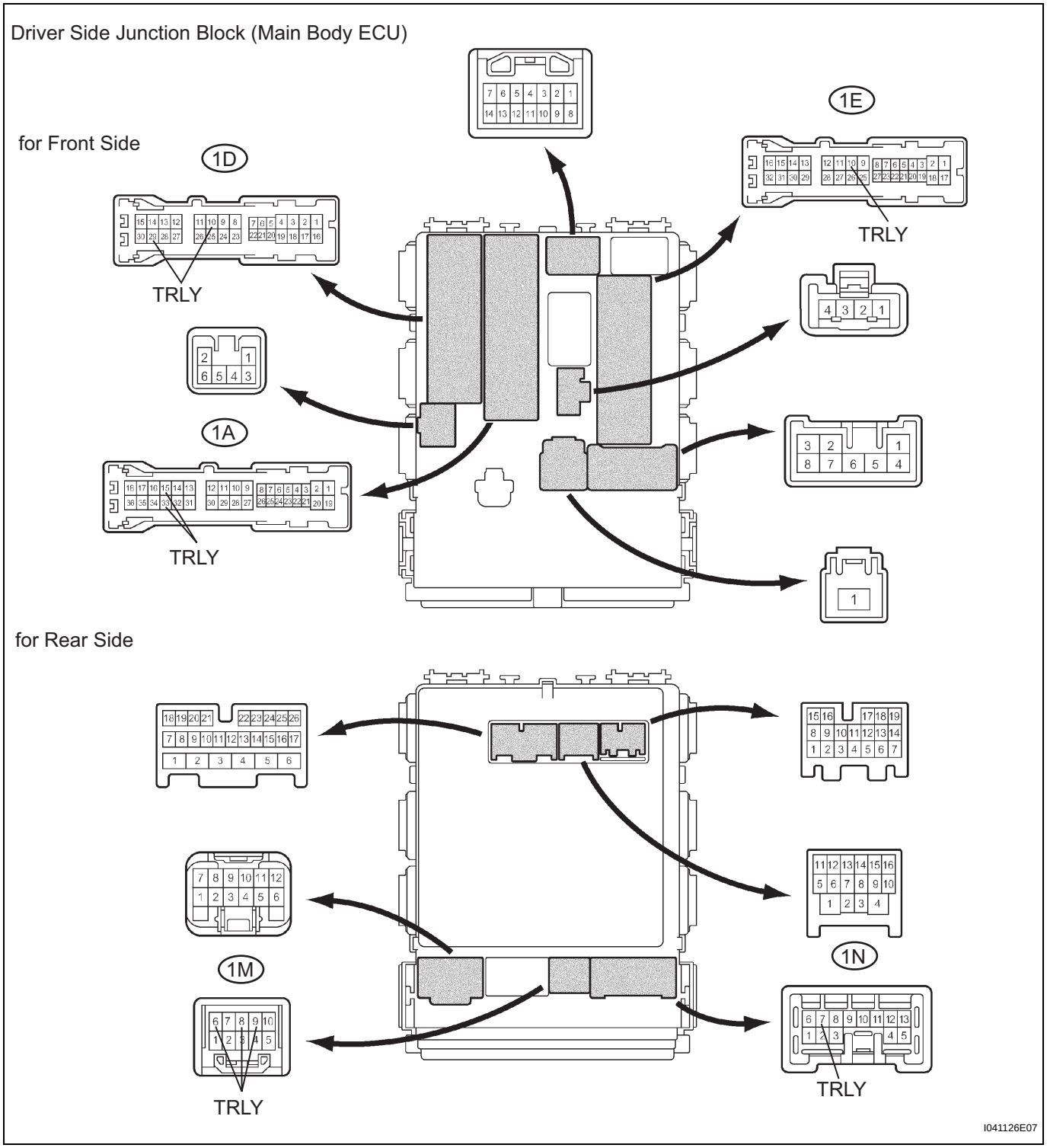

(a) Measure the voltage of the connectors.
Standard voltage

Tester Connection	Condition	Specified Condition
1A-15 (TRLY) - Body ground	Light control switch OFF	Below 1 V
	Light control switch TAIL	10 to 14 V

LI

Tester Connection	Condition	Specified Condition
1A-33 (TRLY) - Body ground	Light control switch OFF	Below 1 V
	Light control switch TAIL	10 to 14 V
1D-10 (TRLY) - Body ground	Light control switch OFF	Below 1 V
	Light control switch TAIL	10 to 14 V
1D-29 (TRLY) - Body ground	Light control switch OFF	Below 1 V
	Light control switch TAIL	10 to 14 V
1E-10 (TRLY) - Body ground	Light control switch OFF	Below 1 V
	Light control switch TAIL	10 to 14 V
1M-6 (TRLY) - Body ground	Light control switch OFF	Below 1 V
	Light control switch TAIL	10 to 14 V
1M-8 (TRLY) - Body ground	Light control switch OFF	Below 1 V
	Light control switch TAIL	10 to 14 V
1M-9 (TRLY) - Body ground	Light control switch OFF	Below 1 V
	Light control switch TAIL	10 to 14 V
1N-7 (TRLY) - Body ground	Light control switch OFF	Below 1 V
	Light control switch TAIL	10 to 14 V

OK → **REPAIR OR REPLACE HARNESS AND CONNECTOR (EACH TAILLIGHT CIRCUIT)**

NG

3 CHECK WIRE HARNESS (ECU - BATTERY)

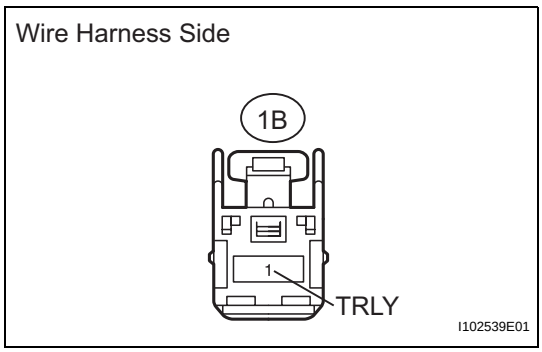

(a) Disconnect the 1B junction block connector.
(b) Measure the voltage of the wire harness side connector.
Standard voltage

Tester Connection	Specified Condition
1B-1 (TRLY) - Body ground	10 to 14 V

NG → **REPAIR OR REPLACE HARNESS AND CONNECTOR**

OK

PROCEED TO NEXT CIRCUIT INSPECTION SHOWN IN PROBLEM SYMPTOMS TABLE

Headlight Beam Level Control ECU Power Source Circuit

DESCRIPTION

This circuit provides power to operate the headlight beam level control ECU.

WIRING DIAGRAM

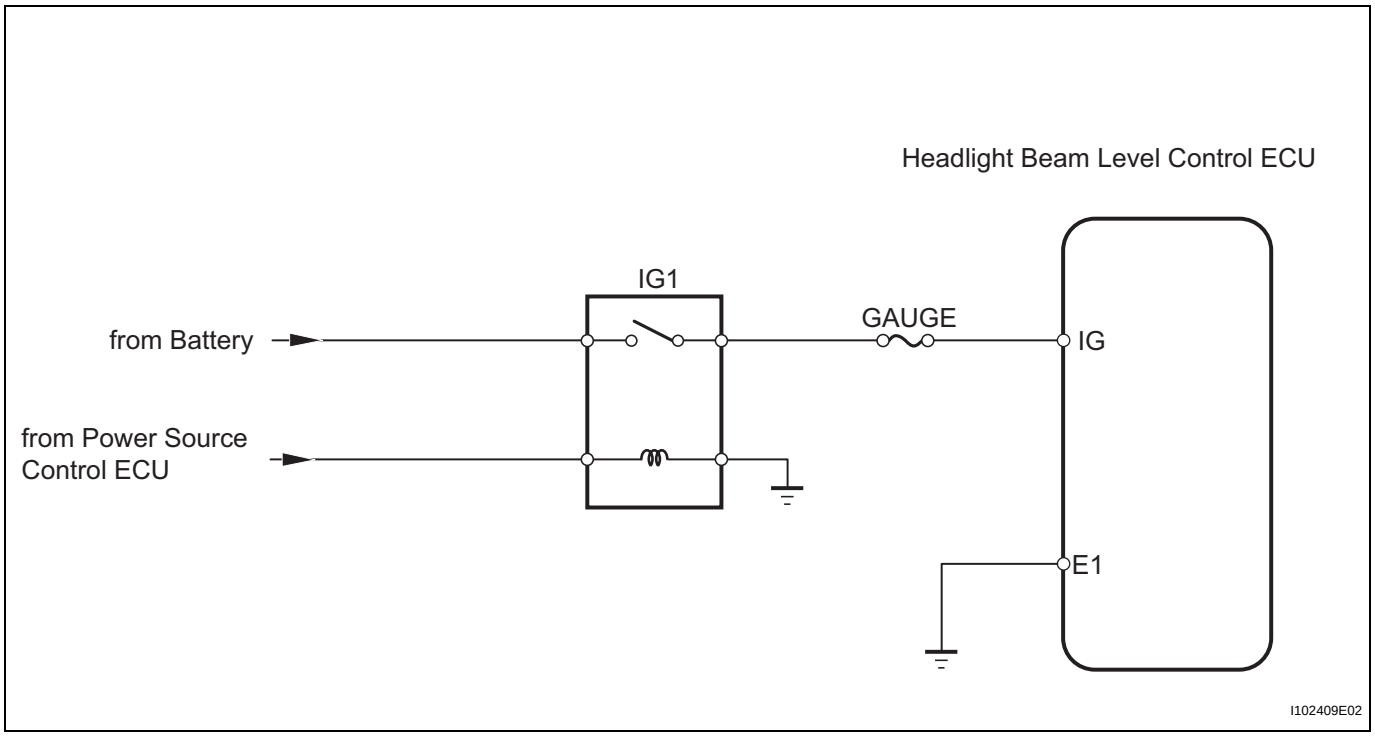

INSPECTION PROCEDURE

1	CHECK WIRE HARNESS (ECU - BATTERY)

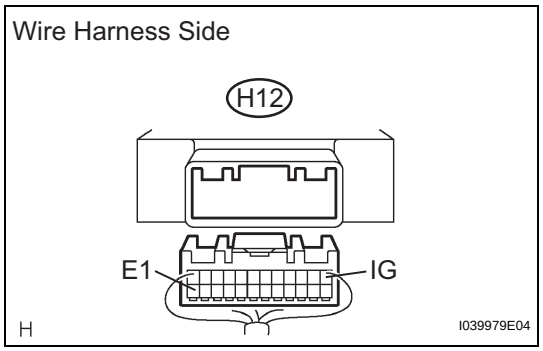

(a) Disconnect the H12 ECU connector.
(b) Measure the voltage of the wire harness side connector.
Standard voltage

Tester Connection	Condition	Specified Condition
H12-1 (IG) - H12-24 (E1)	Power switch ON (IG)	10 to 14 V
	Power switch OFF	Below 1 V

OK → **PROCEED TO NEXT INSPECTION PROCEDURE SHOWN IN PROBLEM SYMPTOMS TABLE**

NG

2	CHECK WIRE HARNESS (ECU - BODY GROUND)

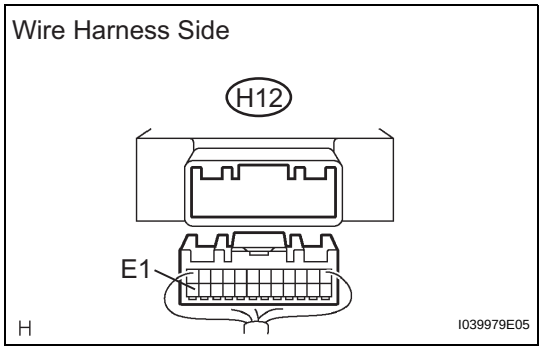

(a) Disconnect the H12 ECU connector.
(b) Measure the resistance of the wire harness side connector.
Standard resistance

Tester Connection	Specified Condition
H12-24 (E1) - Body ground	Below 1 Ω

NG → **REPAIR OR REPLACE HARNESS AND CONNECTOR (GROUND CIRCUIT)**

LI

OK

REPAIR OR REPLACE HARNESS AND CONNECTOR (POWER SOURCE CIRCUIT)

Height Control Sensor Circuit

DESCRIPTION

The headlight beam level control ECU receives the height control sensor signal from the height control sensor or height control ECU.
The headlight beam level control ECU calculates a height value from the height control signal. The voltage at the power source of the height control sensor is corrected when SHR is detected.

WIRING DIAGRAM

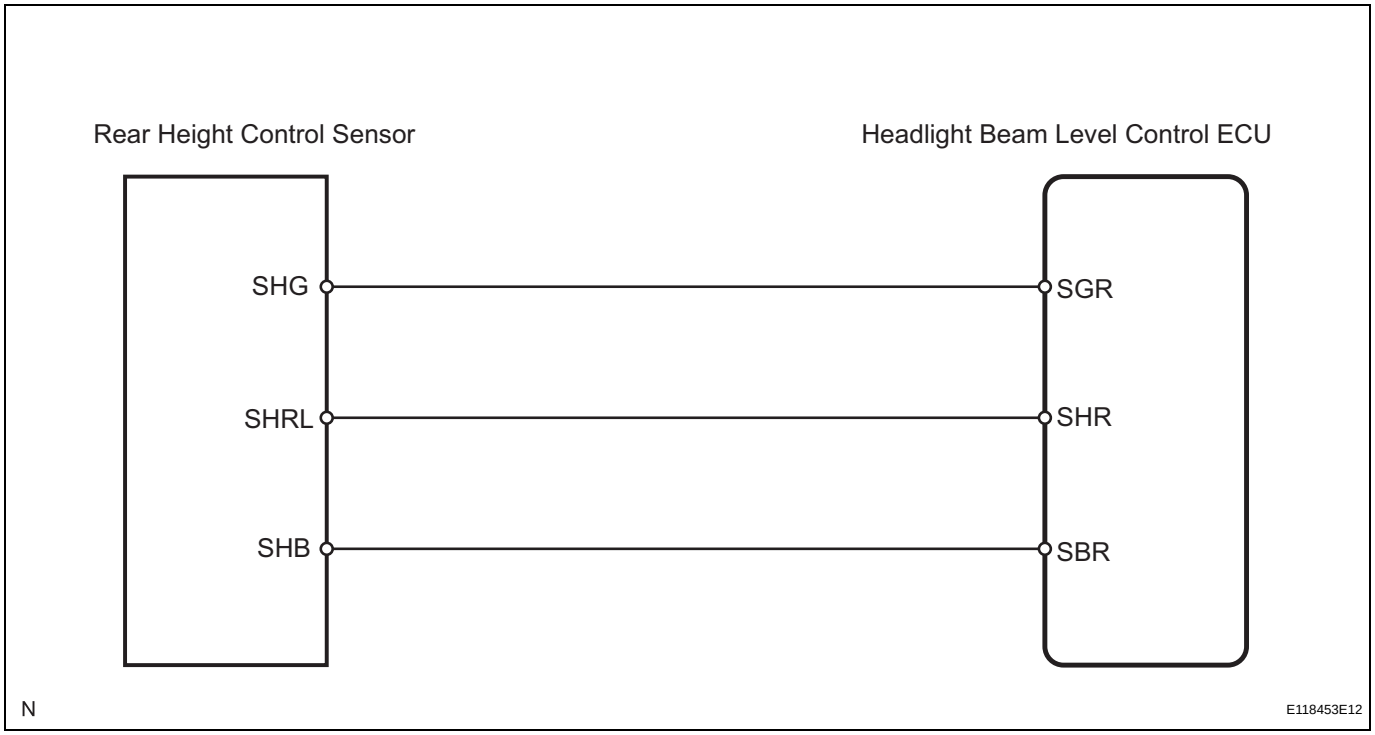

INSPECTION PROCEDURE

1 INSPECT REAR HEIGHT CONTROL SENSOR

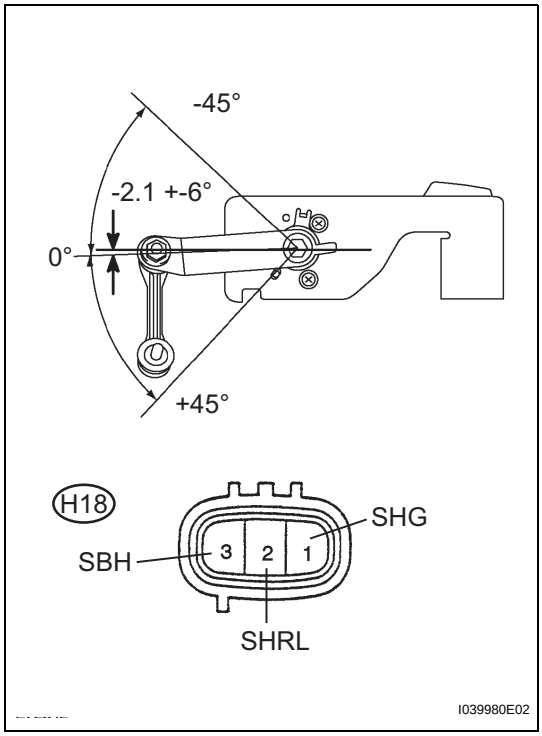

(a) Connect 3 dry cell batteries (1.5 V) in series.
(b) Connect the positive (+) lead from the battery to terminal 3 (SHB) and negative (-) lead from the battery to terminal 1 (SHG).
(c) Measure the voltage between terminals 1 (SHG) and 2 (SHRL) when slowly moving the link up and down.
Standard voltage

Link Angle	Specified Condition
+45° (High)	Approx. 4.5 V
0° (Normal)	Approx. 2.5 V
-45° (Low)	Approx. 0.5 V

NG → **REPLACE REAR HEIGHT CONTROL SENSOR**

OK

2 CHECK WIRE HARNESS (SENSOR - ECU)

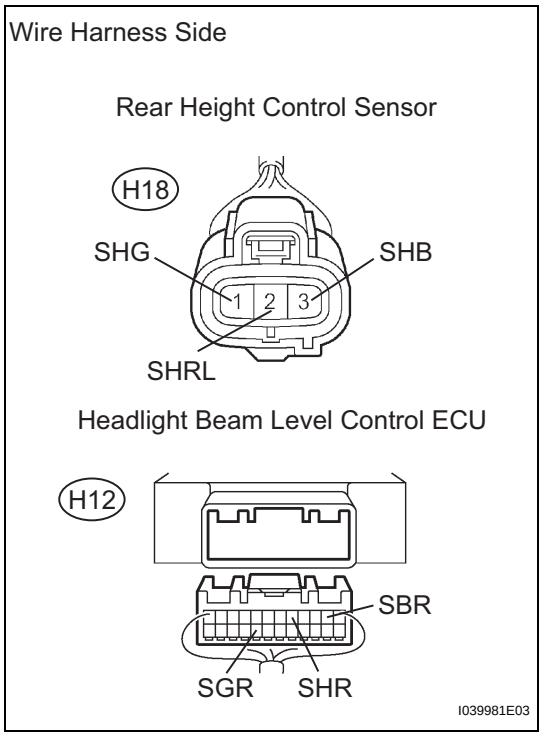

(a) Disconnect the H18 sensor connector.
(b) Disconnect the H12 ECU connector.
(c) Measure the resistance of the wire harness side connectors.
Standard resistance

Tester Connection	Specified Condition
H12-20 (SGR) - H18-1 (SHG)	Below 1 Ω
H12-5 (SHR) - H18-2 (SHRL)	
H12-2 (SBR) - H18-3 (SHB)	
H18-1 (SHG) - Body ground	10 kΩ or higher
H18-2 (SHRL) - Body ground	
H18-3 (SHB) - Body ground	

NG → **REPAIR OR REPLACE HARNESS AND CONNECTOR**

OK

PROCEED TO NEXT INSPECTION PROCEDURE SHOWN IN PROBLEM SYMPTOMS TABLE

Headlight Beam Level Control Actuator Circuit

DESCRIPTION

When the actuator receives signals from the headlight beam level control ECU, the step motor is activated and the angle of the reflector in the headlight will be adjusted.

WIRING DIAGRAM

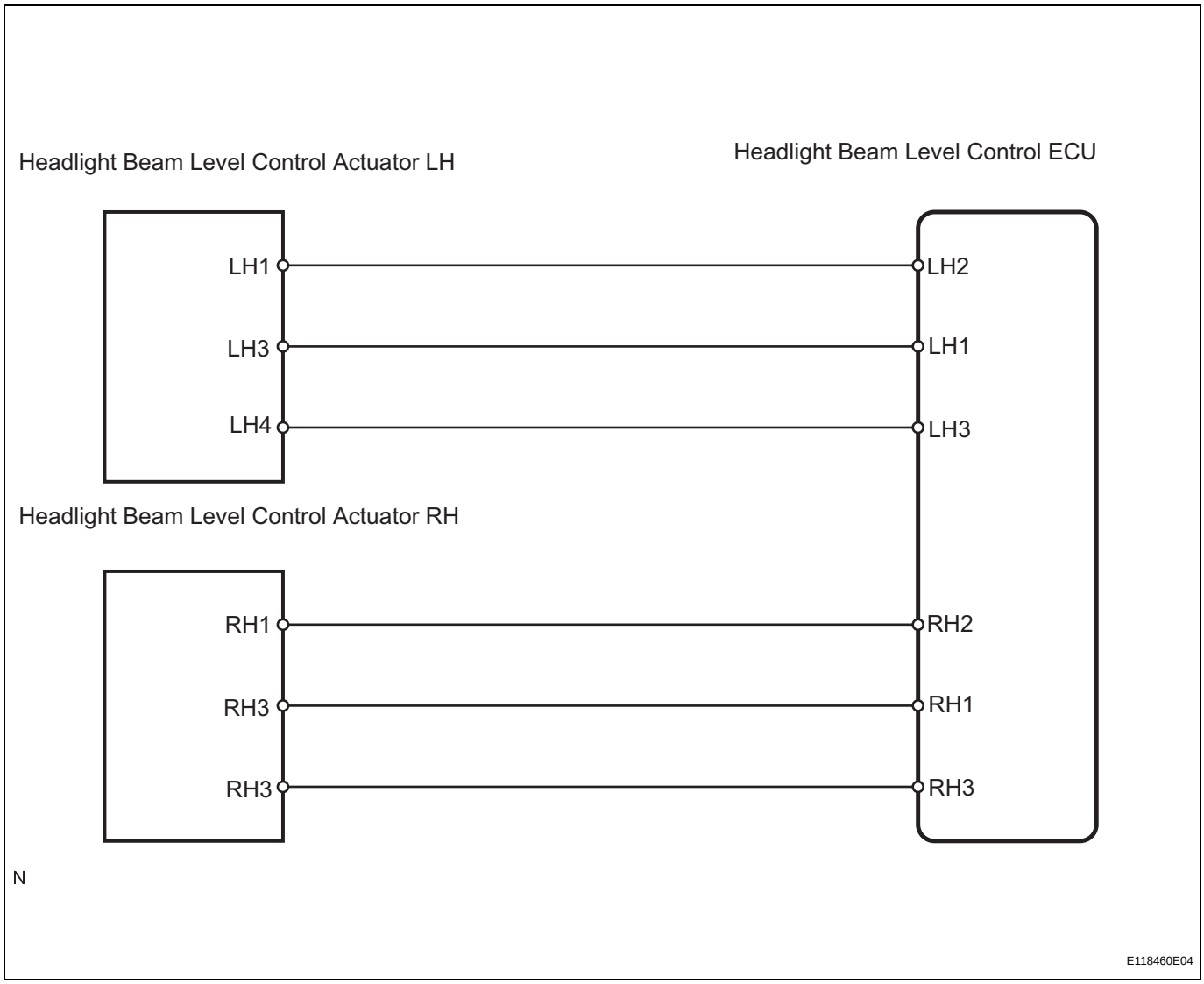

INSPECTION PROCEDURE

1 CHECK HEADLIGHT BEAM LEVEL CONTROL ECU

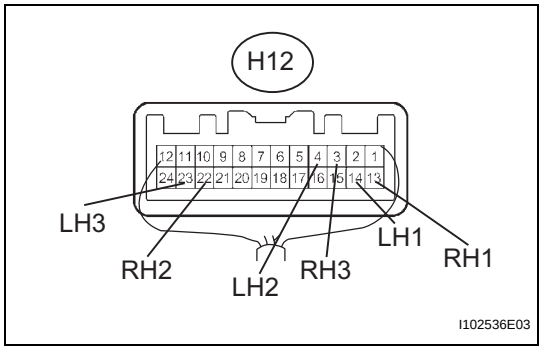

(a) Measure the voltage of the wire harness side connector.
Standard voltage

Tester Connection	Condition	Specified Condition
H12-13 (RH1) - H12-22 (RH3)	Power switch ON (IG)	10 to 14 V
H12-14 (LH1) - H12-23 (LH3)		
H12-3 (RH2) - H12-22 (RH3)	With power switch ON (IG) and headlight on, change the vehicle height and maintain the height for more than 2 seconds	10 to 12.6 V (Approx. 10 seconds)
H12-4 (LH2) - H12-23 (LH3)		

NG → **PROCEED TO NEXT CIRCUIT INSPECTION SHOWN IN PROBLEM SYMPTOMS TABLE**

OK

2 CHECK WIRE HARNESS (ECU - ACTUATOR)

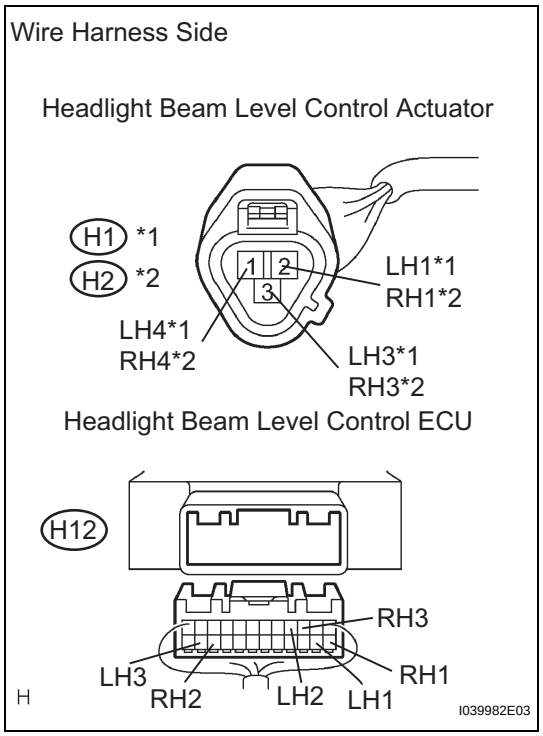

(a) Disconnect the H2*1 or H1*1 actuator connector.
HINT:
*1: for LH side
*2: for RH side

(b) Disconnect the H12 ECU connector.

(c) Measure the resistance of the wire harness side connector.
Standard resistance:
for LH side

Tester Connection	Specified Condition
H12-4 (LH2) - H2-2 (LH1)	Below 1 Ω
H12-14 (LH1) - H2-3 (LH3)	
H12-23 (LH3) - H2-1 (LH4)	
H12-4 (LH2) - Body ground	10 kΩ or higher
H12-14 (LH1) - Body ground	
H12-23 (LH3) - Body ground	

for RH side

Tester Connection	Specified Condition
H12-3 (RH2) - H1-2 (RH1)	Below 1 Ω
H12-13 (RH1) - H1-3 (RH3)	
H12-22 (RH3) - H1-1 (RH4)	
H12-3 (RH2) - Body ground	10 kΩ or higher
H12-13 (RH1) - Body ground	
H12-22 (RH3) - Body ground	

LI

NG → **REPAIR OR REPLACE HARNESS AND CONNECTOR**

OK

REPLACE HEADLIGHT UNIT (HEADLIGHT BEAM LEVEL CONTROL ACTUATOR)

Warning Light Circuit

DESCRIPTION

Headlight beam level control ECU sends the warning signal to the combination meter.

WIRING DIAGRAM

INSPECTION PROCEDURE

HINT:
Check if the combination meter operation is normal before performing the following procedure.

1	CHECK HEADLIGHT BEAM LEVEL CONTROL ECU

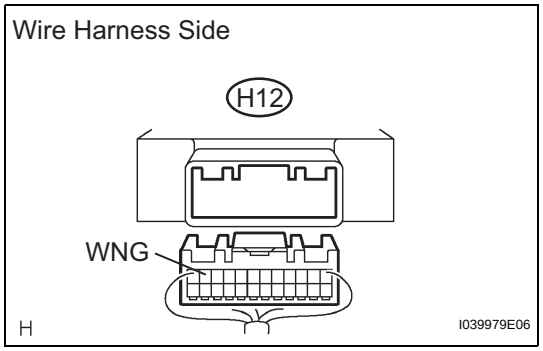

(a) Disconnect the H12 ECU connector.
(b) Measure the voltage of the wire harness side connector.
Standard voltage

Tester Connection	Condition	Specified Condition
H12-11 (WNG) - Body ground	Power switch ON (IG)	10 to 14 V

OK → **PROCEED TO NEXT INSPECTION PROCEDURE SHOWN IN PROBLEM SYMPTOMS TABLE**

NG

2	CHECK WIRE HARNESS (ECU - METER)

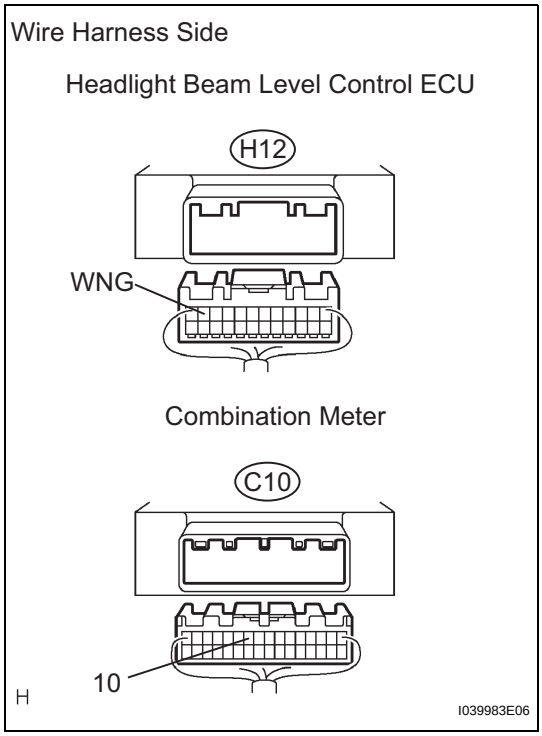

(a) Disconnect the H12 ECU connector.
(b) Disconnect the C10 meter connector.
(c) Measure the resistance of the wire harness side connectors.

Standard resistance

Tester Connection	Specified Condition
H12-11 (WNG) - C10-10	Below 1 Ω
H12-11 (WNG) - Body ground	10 kΩ or higher

NG → **REPAIR OR REPLACE HARNESS AND CONNECTOR**

OK

REPLACE COMBINATION METER

LI

Power Source Circuit

DESCRIPTION

This circuit detects the state of the power switch and sends it to the main body ECU.

WIRING DIAGRAM

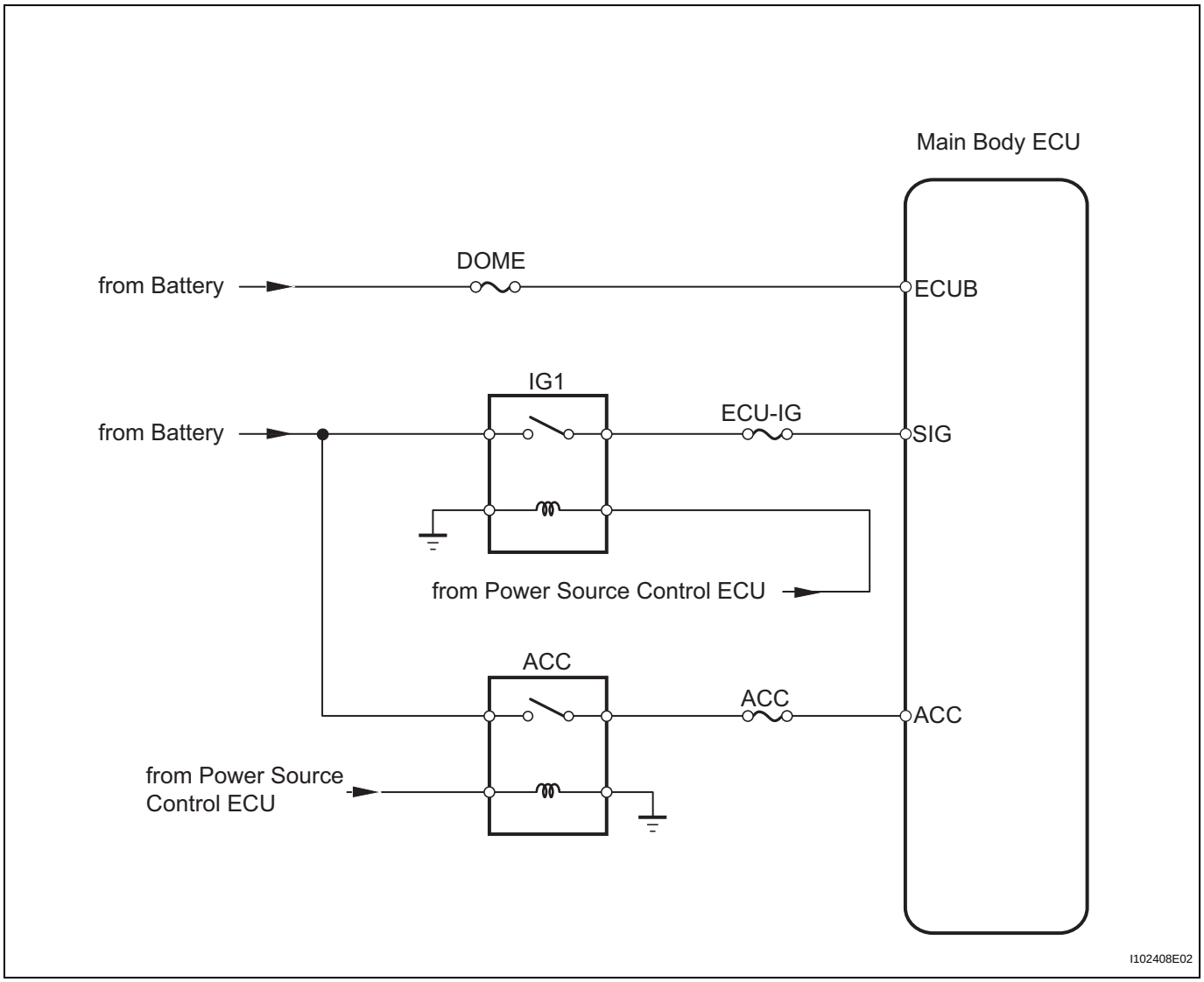

INSPECTION PROCEDURE

HINT:
Check if the power source control ECU operation is normal before performing the following procedure.

1	READ VALUE OF INTELLIGENT TESTER (POWER SWITCH)

(a) Check the DATA LIST for proper functioning of the power switch.

Main body ECU

Item	Measurement Item / Display (Range)	Normal Condition	Diagnostic Note
ACC SW	ACC switch signal / ON or OFF	ON: Power switch ON (ACC) OFF: Power switch OFF	-

Item	Measurement Item / Display (Range)	Normal Condition	Diagnostic Note
IG SW	IG switch signal / ON or OFF	ON: Power switch ON (IG) OFF: Power switch OFF	-

OK → **PROCEED TO NEXT INSPECTION PROCEDURE SHOWN IN PROBLEM SYMPTOMS TABLE**

NG

2 CHECK DRIVER SIDE JUNCTION BLOCK (MAIN BODY ECU)

LI

Driver Side Junction Block (Main Body ECU)

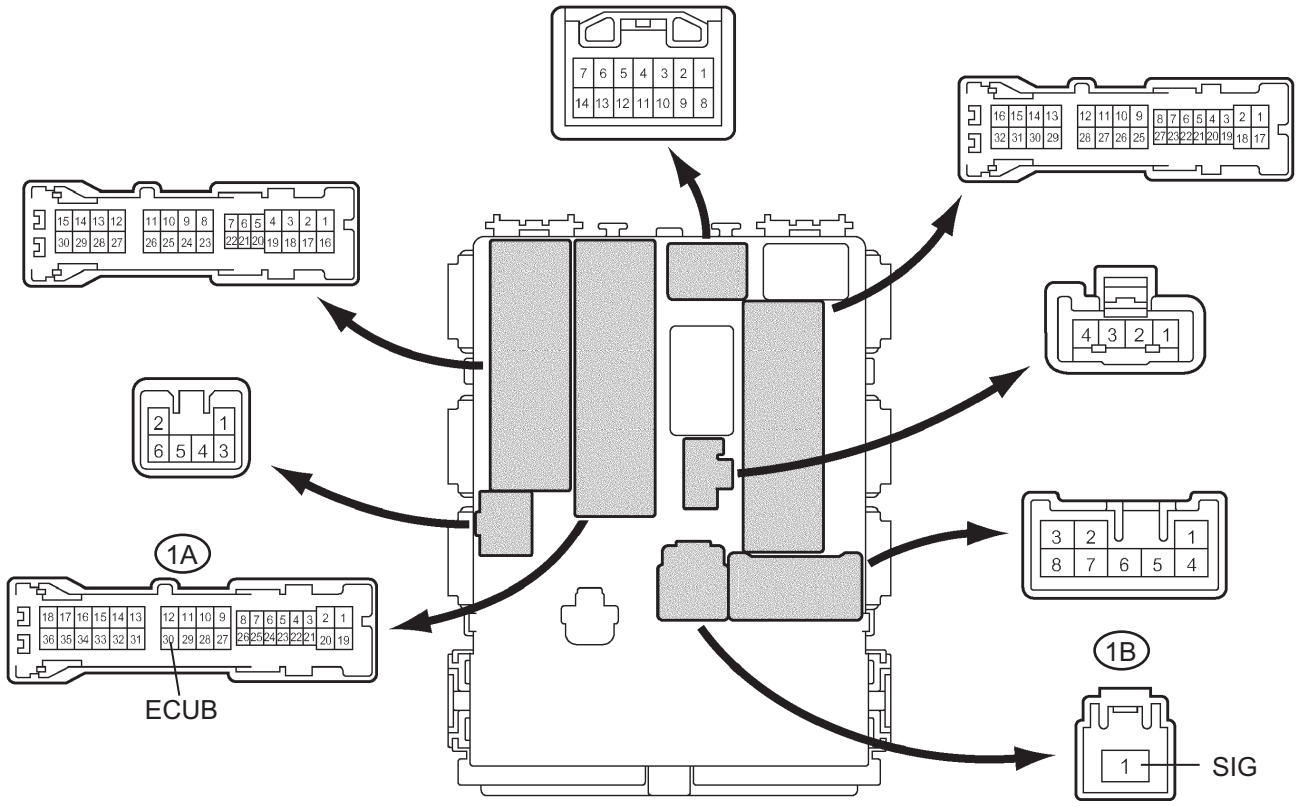

(a) Measure the voltage of the connectors.
Standard voltage

Tester Connection	Specified Condition
1A-30 (ECUB) - Body ground	**10 to 14 V**
1B-1 (SIG) - Body ground	

NG → **REPAIR OR REPLACE HARNESS AND CONNECTOR**

OK

3	**CHECK DRIVER SIDE JUNCTION BLOCK (MAIN BODY ECU)**

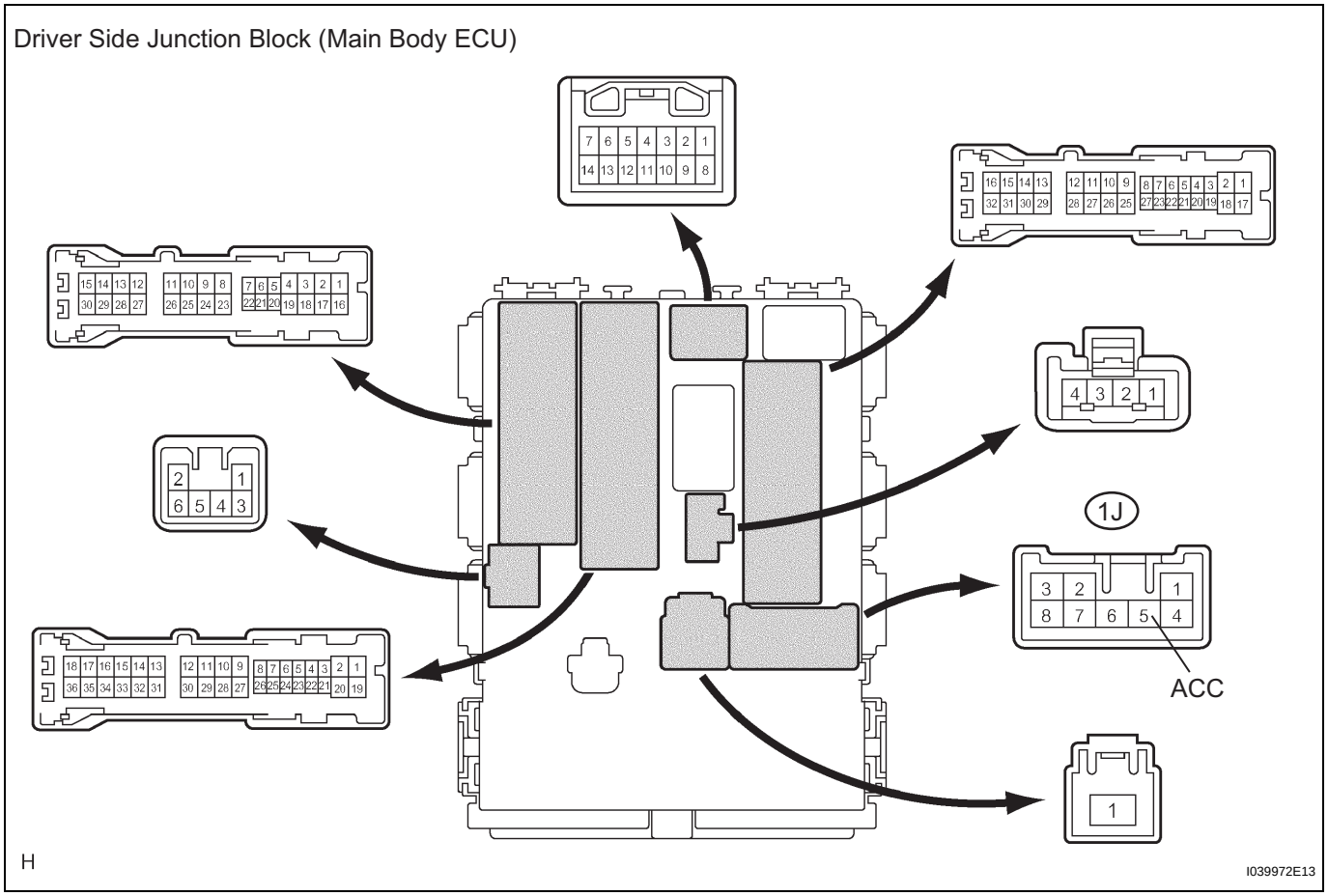

(a) Measure the voltage of the connector.
Standard voltage

Tester Connection	Condition	Specified Condition
1J-5 (ACC) - Body ground	Power switch ON (ACC)	10 to 14 V

OK → **PROCEED TO NEXT INSPECTION PROCEDURE SHOWN IN PROBLEM SYMPTOMS TABLE**

NG

4	CHECK DRIVER SIDE JUNCTION BLOCK (MAIN BODY ECU)

Driver Side Junction Block (Main Body ECU)

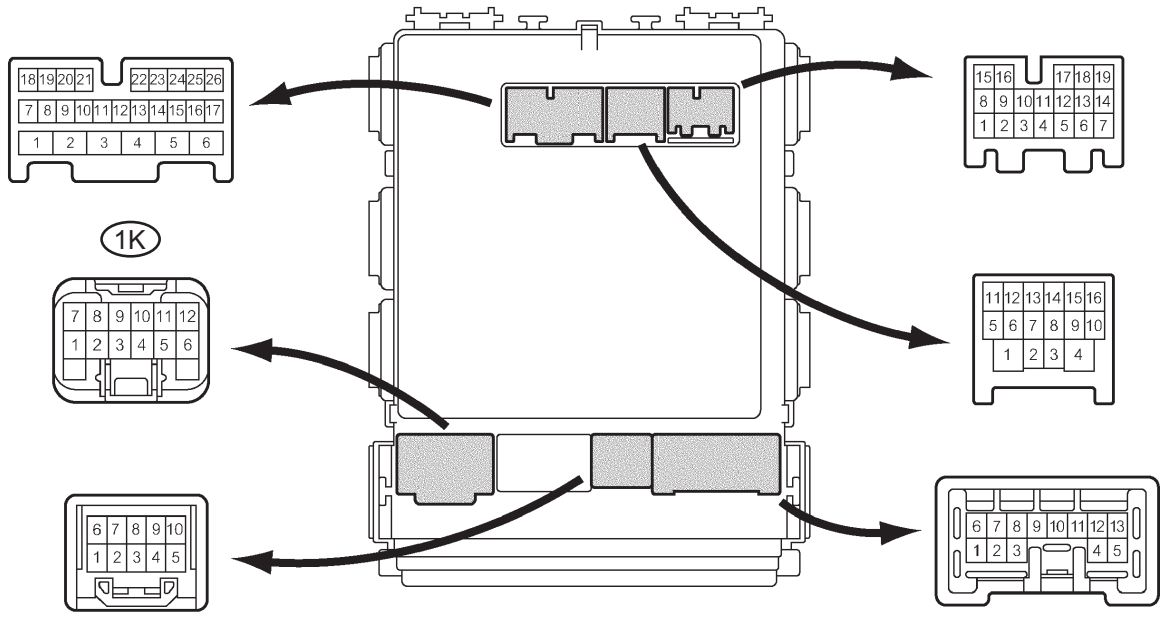

(a) Measure the voltage of the connector.
Standard voltage

Tester Connection	Specified Condition
1K-9 - Body ground	10 to 14 V

NG → **REPLACE DRIVER SIDE JUNCTION BLOCK (MAIN BODY ECU)**

OK

REPAIR OR REPLACE HARNESS AND CONNECTOR

HEADLIGHT ASSEMBLY

COMPONENTS

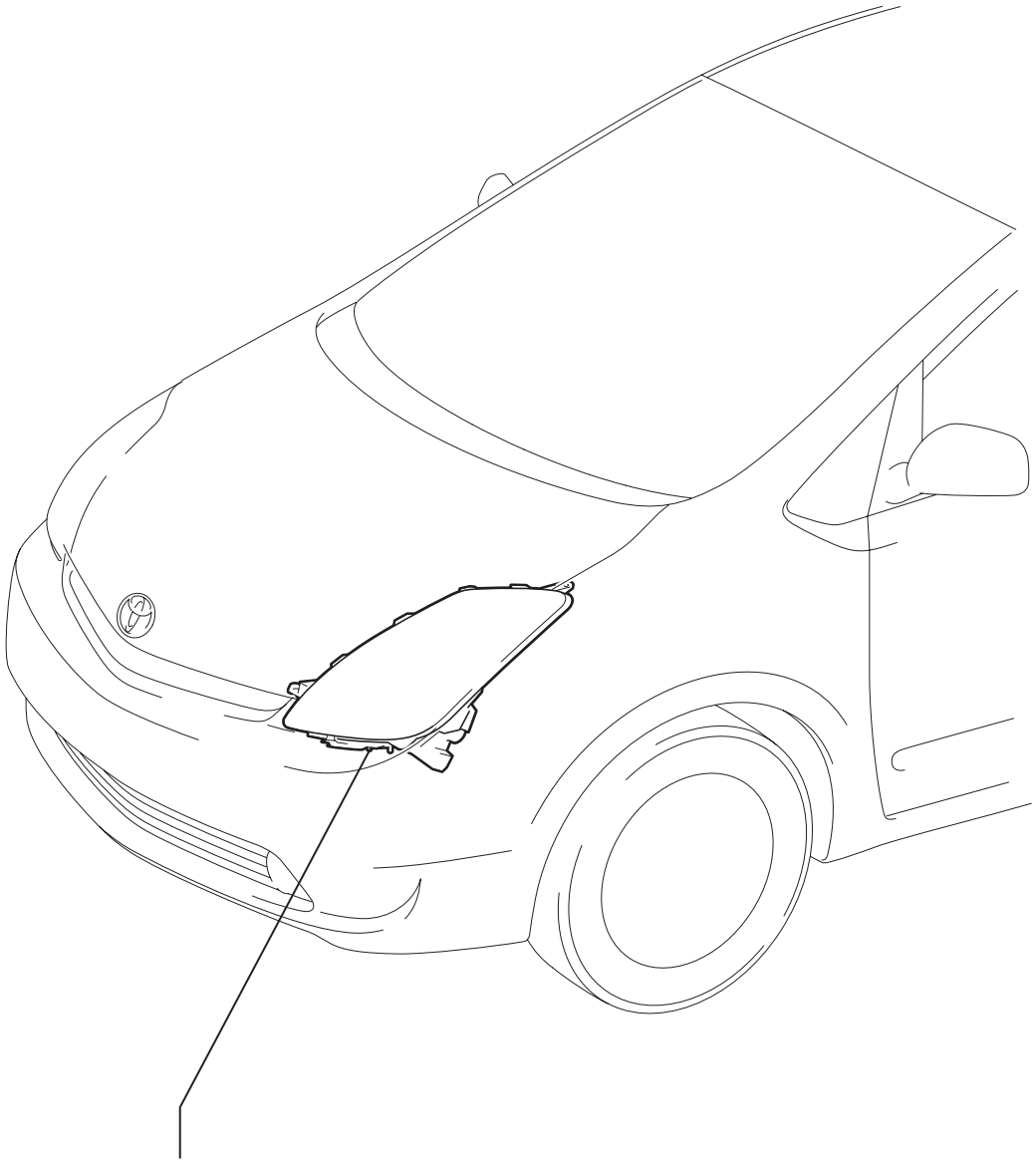

B139853E01

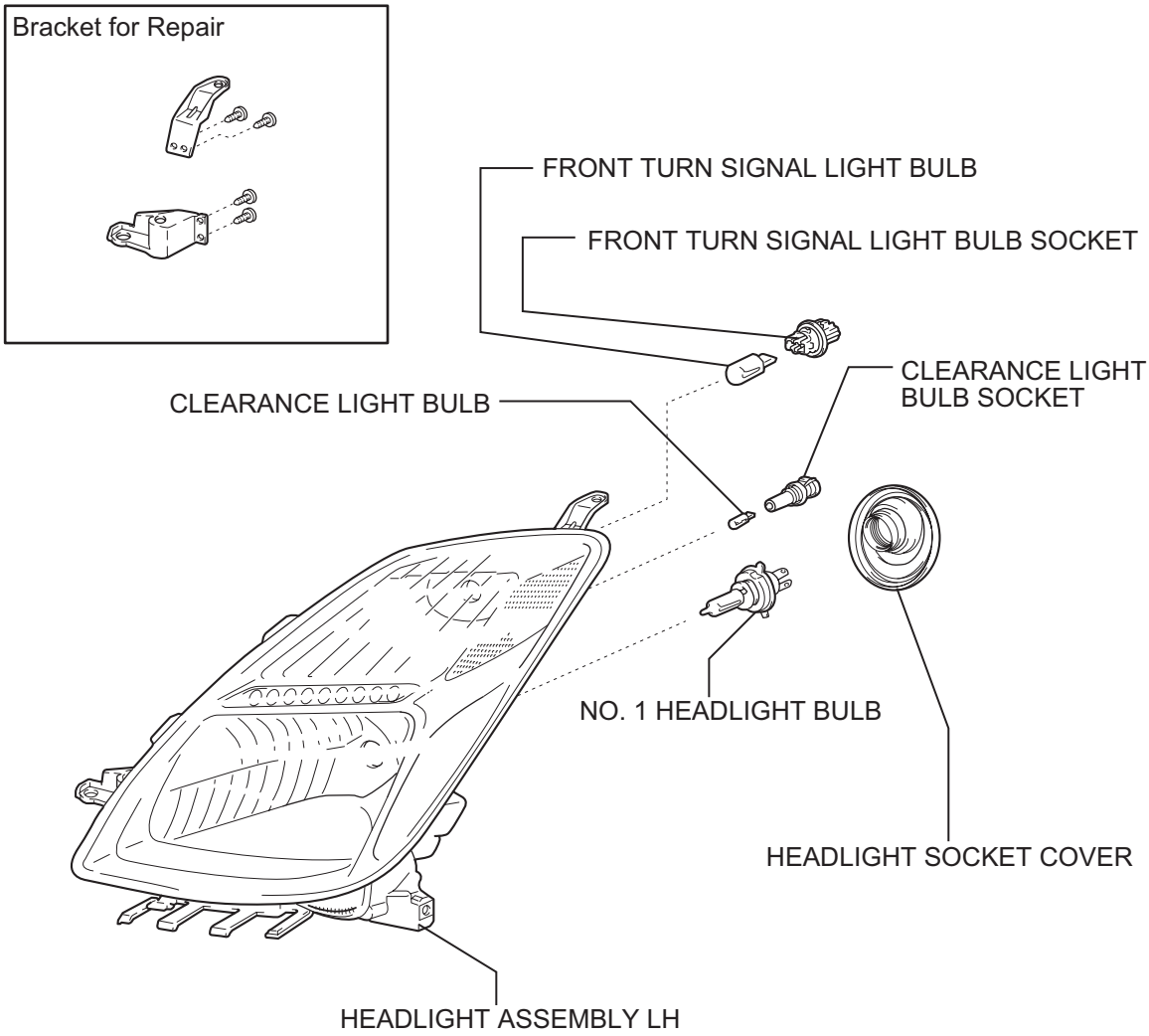
Bracket for Repair
FRONT TURN SIGNAL LIGHT BULB
FRONT TURN SIGNAL LIGHT BULB SOCKET
CLEARANCE LIGHT BULB SOCKET
CLEARANCE LIGHT BULB
NO. 1 HEADLIGHT BULB
HEADLIGHT SOCKET COVER
HEADLIGHT ASSEMBLY LH

B139875E01

for HID Headlight

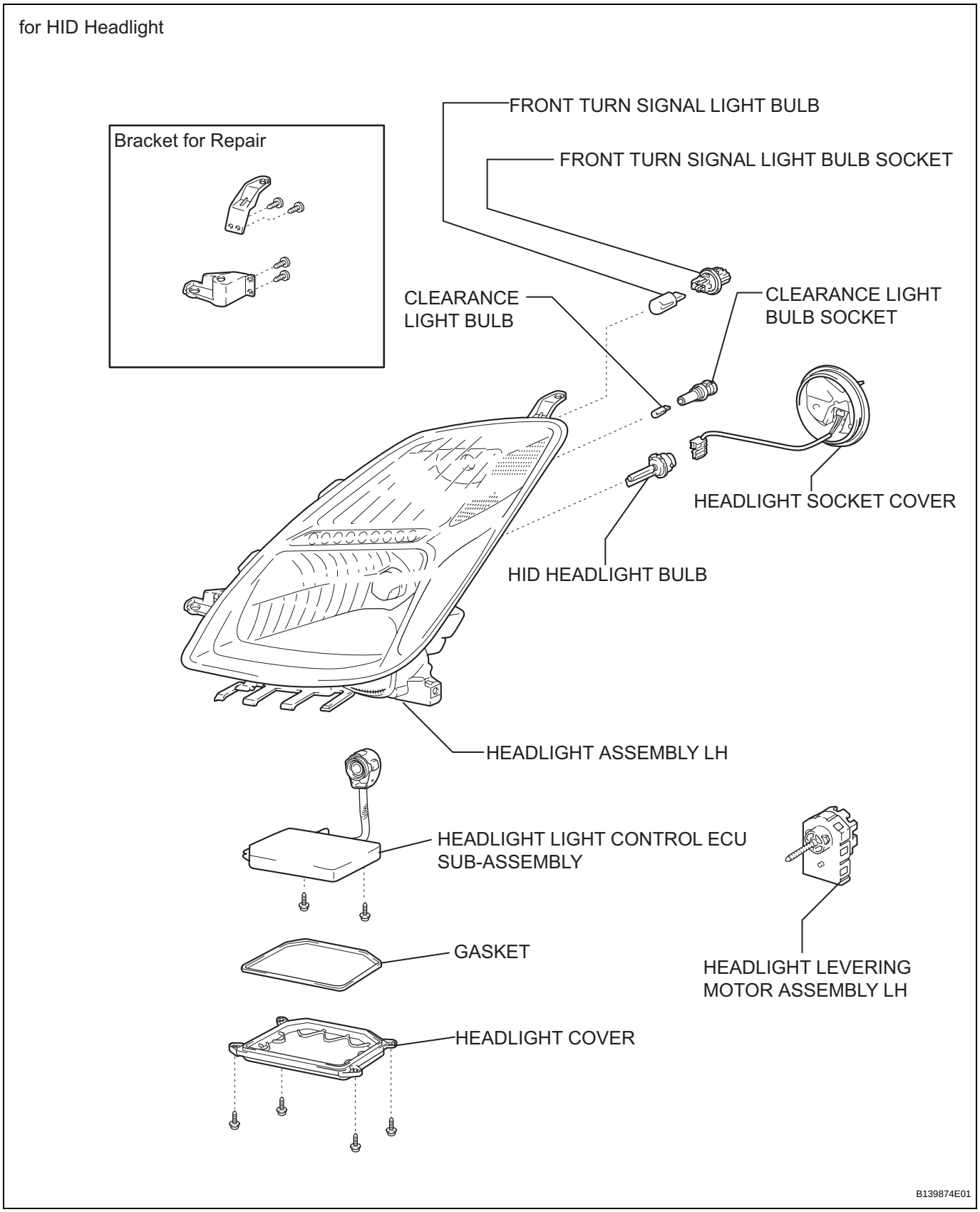

REMOVAL

- Use the same procedures for the RH and LH sides.
- The procedures listed below are for the LH side.

1. DISCONNECT CABLE FROM NEGATIVE BATTERY TERMINAL
CAUTION:
Wait at least 90 seconds after disconnecting the cable from the negative (-) battery terminal to prevent airbag and seat belt pretensioner activation.

2. REMOVE FRONT FENDER LINER LH (See page ET-3)

3. REMOVE FRONT FENDER LINER RH (See page ET-3)

4. REMOVE FRONT BUMPER COVER (See page ET-4)

5. REMOVE HEADLIGHT ASSEMBLY LH
(a) Remove the 3 screws.
(b) Pull the headlight towards the front of the vehicle, disconnect all connectors and remove the headlight.

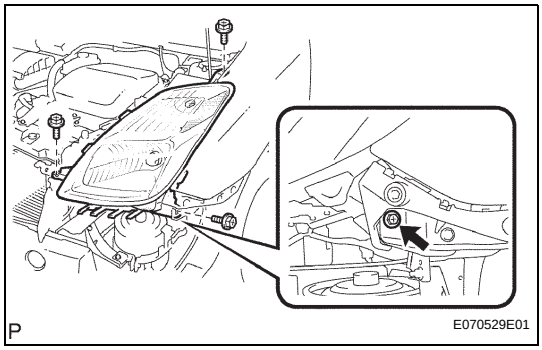

6. REMOVE NO. 1 HEADLIGHT BULB (w/o HID Headlight System)
(a) Turn the headlight socket cover in the direction indicated by the arrow in the illustration to remove it.

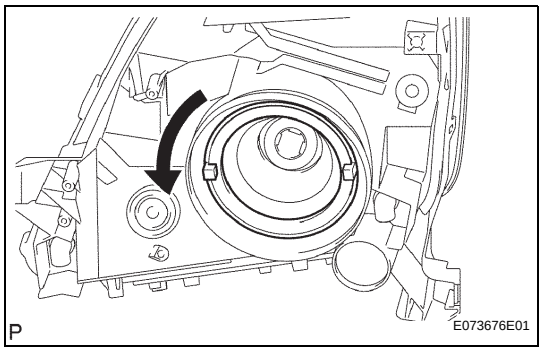

(b) Push the set spring in the direction indicated by the arrow in the illustration to remove the No. 1 headlight bulb.
NOTICE:
Do not touch the bulb glass with your fingers.

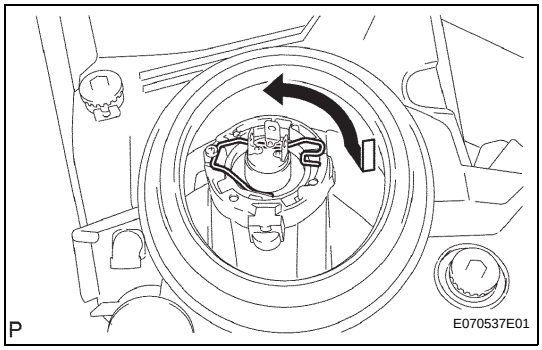

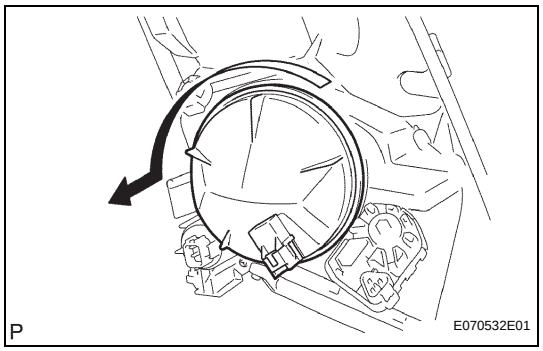

7. REMOVE HID HEADLIGHT BULB (w/ HID Headlight System)

(a) Turn the headlight socket cover in the direction indicated by the arrow in the illustration to remove it.

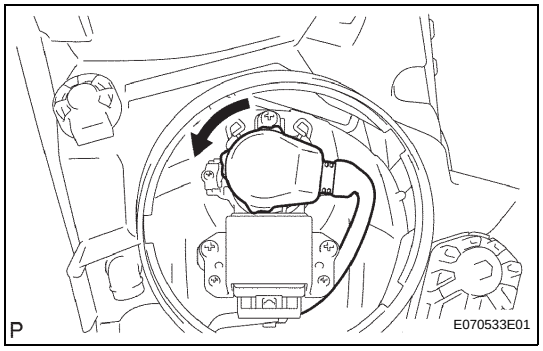

(b) Turn the headlight light control ECU socket in the direction indicated by the arrow in the illustration to remove it.

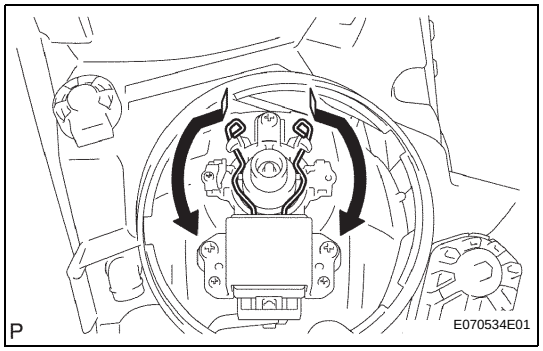

(c) Push the set spring in the direction indicated by the arrow in the illustration and remove the discharge headlight bulb.
NOTICE:
Do not touch the bulb glass with your fingers.

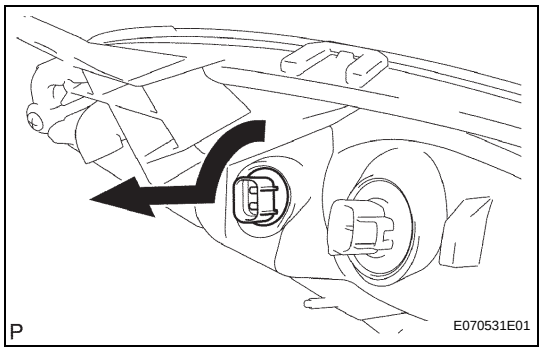

8. REMOVE CLEARANCE LIGHT BULB

(a) Turn the clearance light socket and bulb in the direction indicated by the arrow in the illustration to remove them.

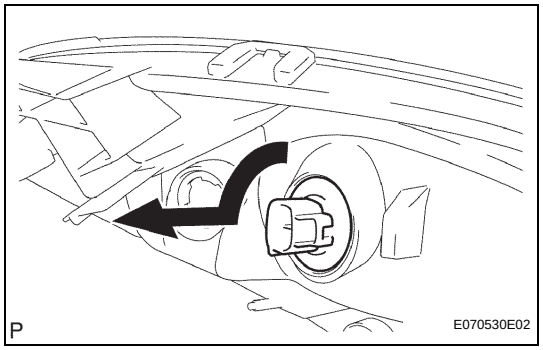

9. REMOVE FRONT TURN SIGNAL LIGHT BULB

(a) Rotate the front turn signal light socket and bulb in the direction indicated by the arrow in the illustration to remove them.

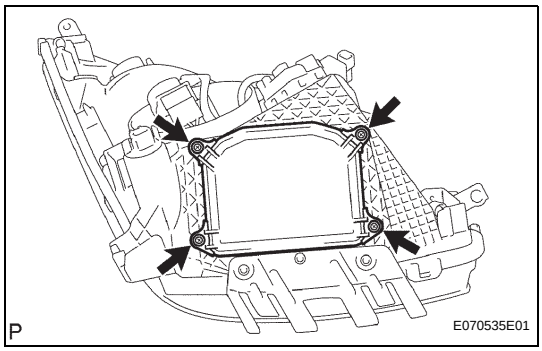

10. REMOVE HEADLIGHT LIGHT CONTROL ECU SUB-ASSEMBLY (w/ HID Headlight System)

(a) Remove the 4 screws, headlight cover and gasket.

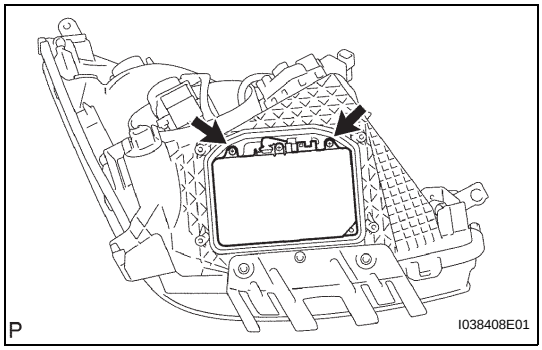

(b) Remove the 2 screws.

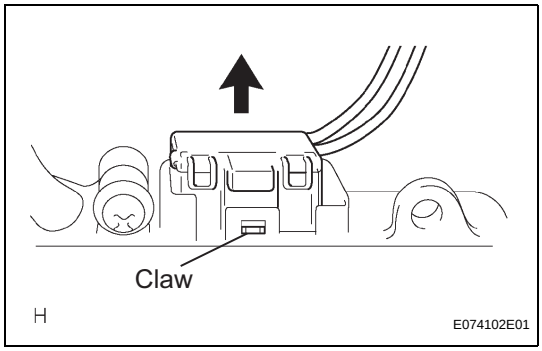

(c) Disengage the claw and disconnect the connector, and then remove the headlight light control ECU.
HINT:
If the bulb socket cannot be removed due to interference with the reflector, turn the aiming screw counterclockwise, move the reflector, and then remove the bulb socket.

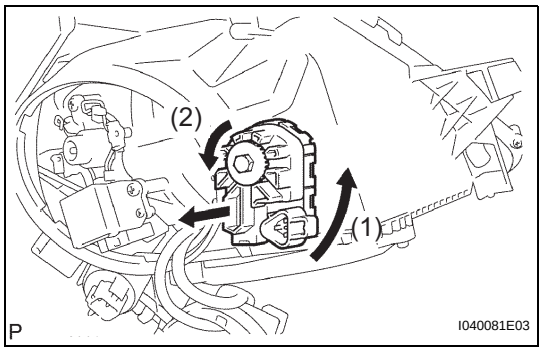

11. REMOVE HEADLIGHT LEVERING MOTOR ASSEMBLY LH (w/ HID Headlight System)

(a) Rotate the headlight leveling motor in the direction indicated by arrow (1) in the illustration.
(b) Rotate the aiming screw on the headlight leveling motor in the direction indicated by arrow (2) in the illustration and remove the shaft.
(c) Pull the headlight leveling motor towards you to remove it.

ADJUSTMENT

1. ADJUST HEADLIGHT AIM ONLY

HINT:

- Perform aim adjustment with low-beam.
- Since the low-beam light and the high-beam light are a unit, if aiming on either side is correct, the other side should also be correct. However, check both beams to make sure.

(a) Prepare the vehicle by performing the following.

- Ensure there is no damage or deformation to the body around the headlights.
- Fill the fuel tank.
- Make sure that the oil is filled to the specified level.
- Make sure that the coolant is filled to the specified level.
- Inflate the tires to the appropriate pressure (see page TW-3).
- Place the spare tire, tools, and jack in their original position.
- Unload the trunk.
- Sit a person of average weight (68 kg (150 lbs)) in the driver's seat.

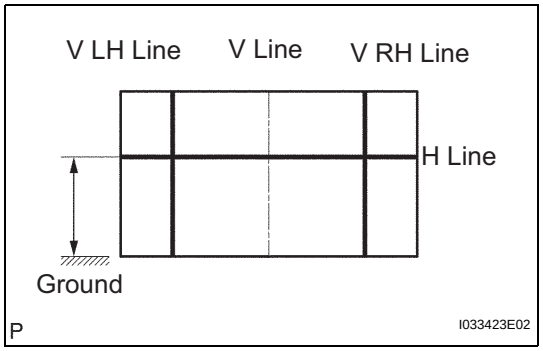

(b) Prepare a piece of thick white paper (draw base lines).

HINT:

- Stand the paper perpendicularly against a wall.
- The base lines differ for "Low-beam inspection" and "High-beam inspection".

(1) V line (vehicle center position).

Draw a vertical line down the center of the paper to align with the center of the vehicle.

(2) H line (headlight height).

Draw a horizontal line across the paper so that it is at the same height as the center mark of the low-beam light on the vehicle.

(3) V LH line, V RH line (center mark position of right and left headlights).

Draw vertical lines on the left and right sides of the paper so that they line up with the center mark on the low-beam lights on the vehicle.

HINT:

When performing "High-beam inspection", draw an H line, a V LH line, and a V RH line based on the center mark on the high-beam headlight side.

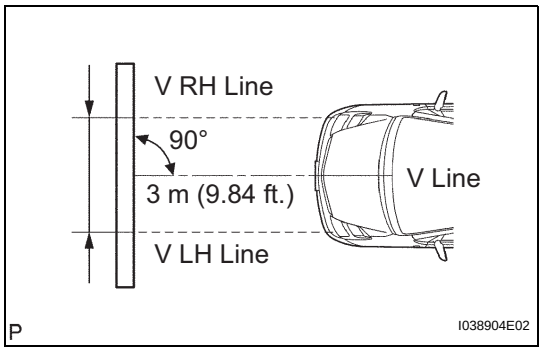

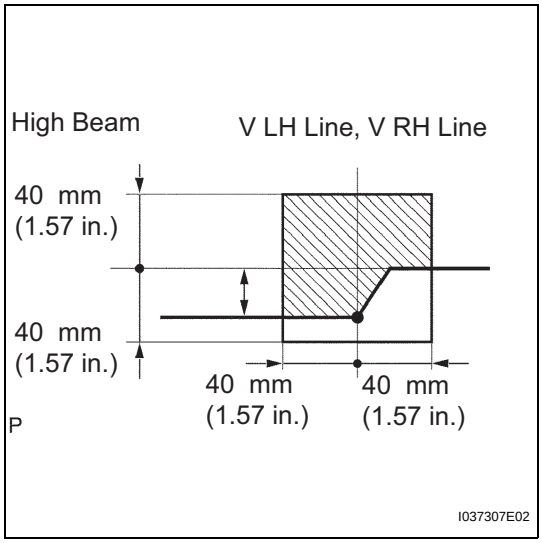

(c) Check headlight aim
  (1) Align the paper and vehicle.
    - Make a distance of 3 m (9.84 ft.) between the headlights and the paper. Place the paper against a wall with the H line at the same height as the center mark.
    - Align the center of the vehicle with the V line on the paper. Ensure that the paper forms a 90° angle to the V line.
  (2) Start the engine.
  (3) Turn on the headlight and check that the aim is within the specified range shown in the illustration.

LI

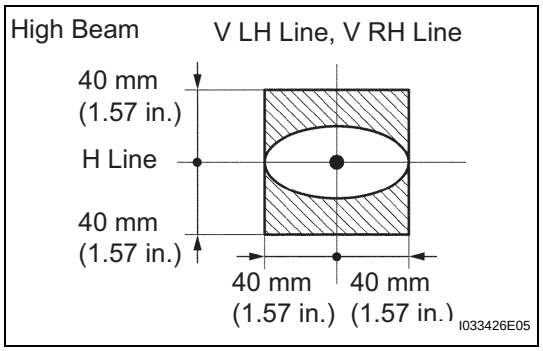

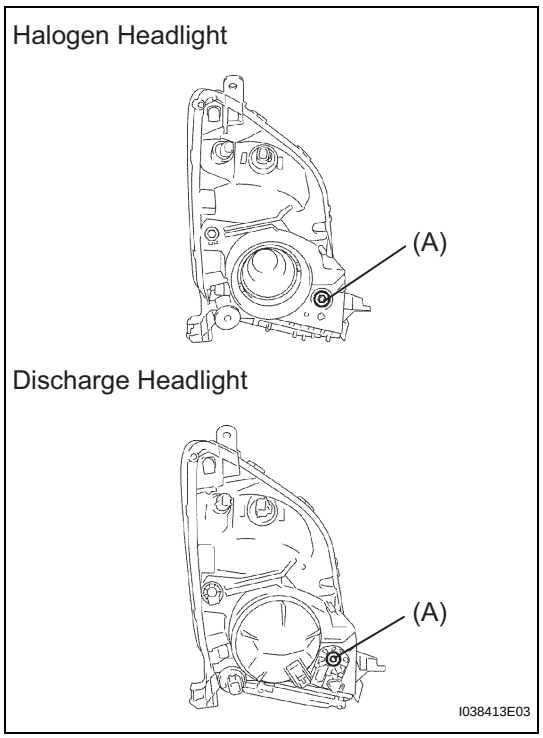

(d) Adjust the aim in the vertical direction:
Using a screwdriver, adjust the headlight aim into the specified range by turning aiming screw A.

NOTICE:

- **Adjust the headlight aim by turning the screw in the tightening direction.**
- **When the screw is tightened excessively, loosen it once and retighten it to adjust the headlight aim.**

HINT:
The headlight aim moves down when turning the screw clockwise, and moves up when turning the screw counterclockwise.

INSTALLATION

HINT:
- Use the same procedures for the RH and LH sides.
- The procedures listed below are for the LH side.

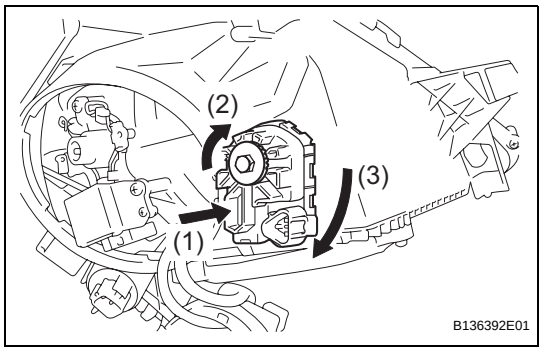

1. INSTALL HEADLIGHT LEVERING MOTOR ASSEMBLY LH (w/ HID Headlight System)

(a) Attach the headlight levering motor to the headlight.

(b) Rotate the aiming screw on the headlight leveling motor in the direction indicated by arrow (2) in the illustration and install the shaft.

(c) Rotate the headlight leveling motor in the direction indicated by arrow (3) in the illustration to install it.

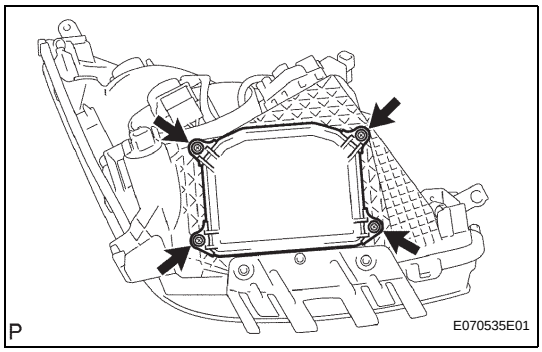

2. INSTALL HEADLIGHT LIGHT CONTROL ECU SUB-ASSEMBLY (w/ HID Headlight System)

(a) Install the headlight cover and gasket with the 4 screws.

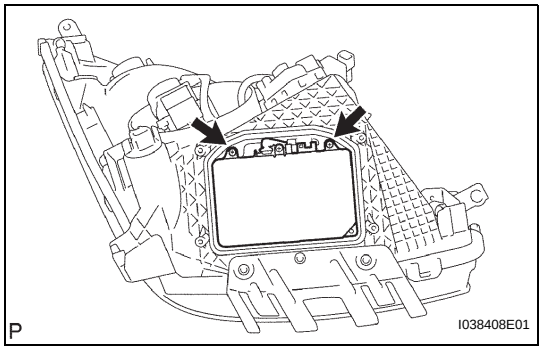

(b) Install the 2 screws.

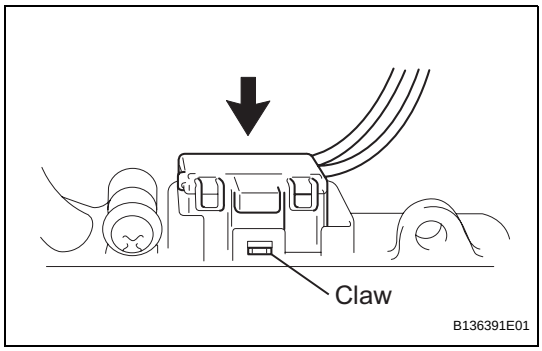

(c) Attach the claw and disconnect the connector, and then install the headlight light control ECU.
HINT:
If the bulb socket cannot be removed due to interference with the reflector, turn the aiming screw counterclockwise, move the reflector, and then install the bulb socket.

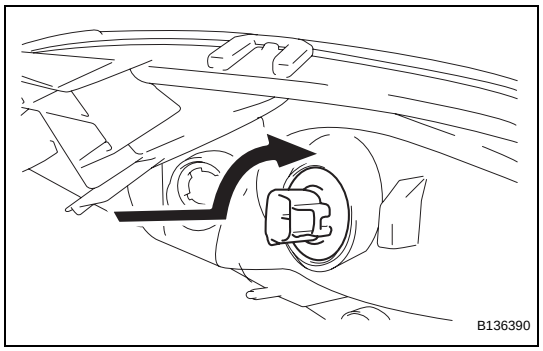

3. INSTALL FRONT TURN SIGNAL LIGHT BULB

(a) Rotate the front turn signal light socket and bulb in the direction indicated by the arrow in the illustration to install them.

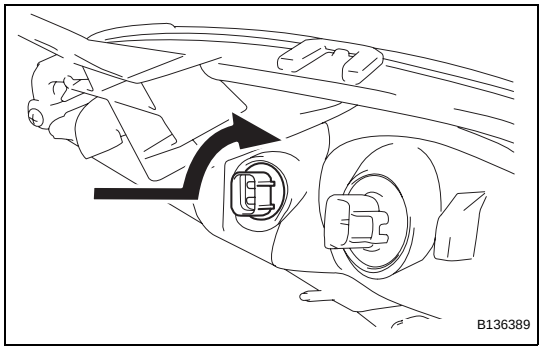

4. INSTALL CLEARANCE LIGHT BULB

(a) Turn the clearance light socket and bulb in the direction indicated by the arrow in the illustration to install them.

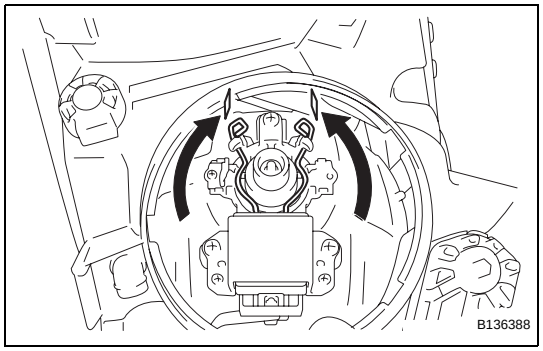

5. INSTALL HID HEADLIGHT BULB (w/ HID Headlight System)

(a) Push the set spring in the direction indicated by the arrow in the illustration and install the discharge headlight bulb.
NOTICE:
Do not touch the bulb glass with your fingers.

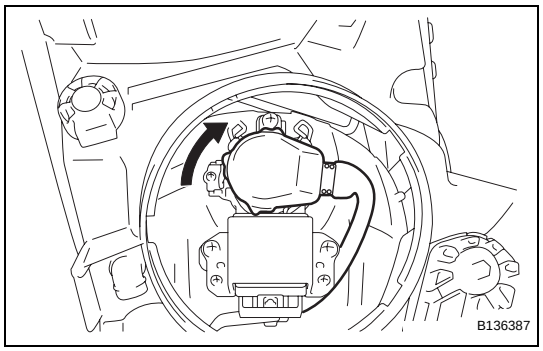

(b) Turn the headlight light control ECU socket in the direction indicated by the arrow in the illustration to install it.

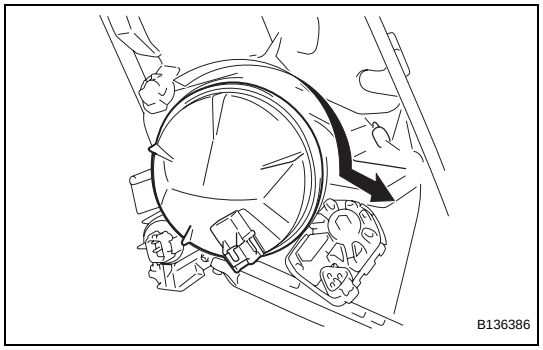

(c) Turn the headlight socket cover in the direction indicated by the arrow in the illustration to install it.

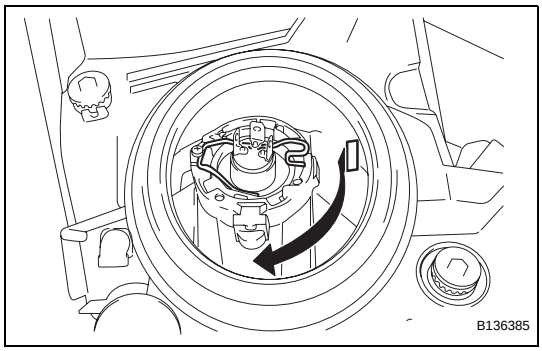

6. INSTALL NO. 1 HEADLIGHT BULB (w/o HID Headlight System)

(a) Push the set spring in the direction indicated by the arrow in the illustration to install the No. 1 headlight bulb.

NOTICE:
Do not touch the bulb glass with your fingers.

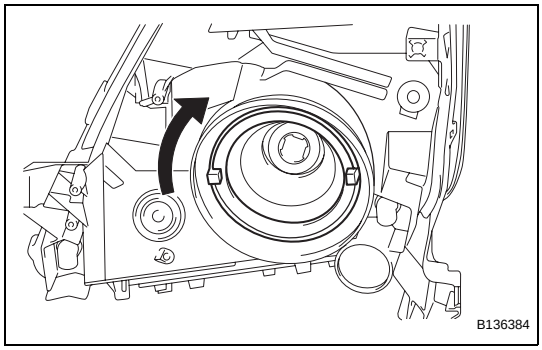

(b) Turn the headlight socket cover in the direction indicated by the arrow in the illustration to install it.

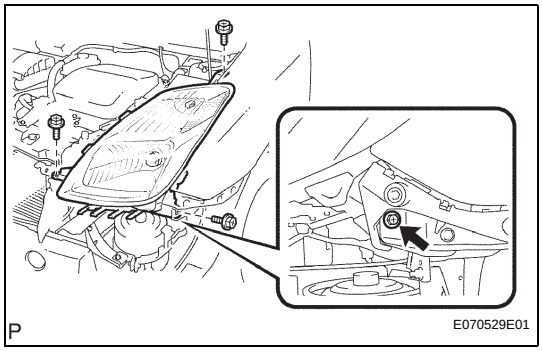

7. INSTALL HEADLIGHT ASSEMBLY LH

(a) Install the 3 screws.
(b) Connect all connectors and install the headlight.

8. INSTALL FRONT BUMPER COVER (See page ET-6)

9. INSTALL FRONT FENDER LINER RH (See page ET-7)

10. INSTALL FRONT FENDER LINER LH (See page ET-7)

11. CONNECT CABLE TO NEGATIVE BATTERY TERMINAL

12. PERFORM INITIALIZATION

(a) Perform initialization (see page IN-32).

NOTICE:
Certain systems need to be initialized after disconnecting and reconnecting the cable from the negative (-) battery terminal.

13. ADJUST HEADLIGHT AIM ONLY (See page LI-80)

14. ADJUST FOG LIGHT AIMING (See page LI-87)

FOG LIGHT ASSEMBLY

COMPONENTS

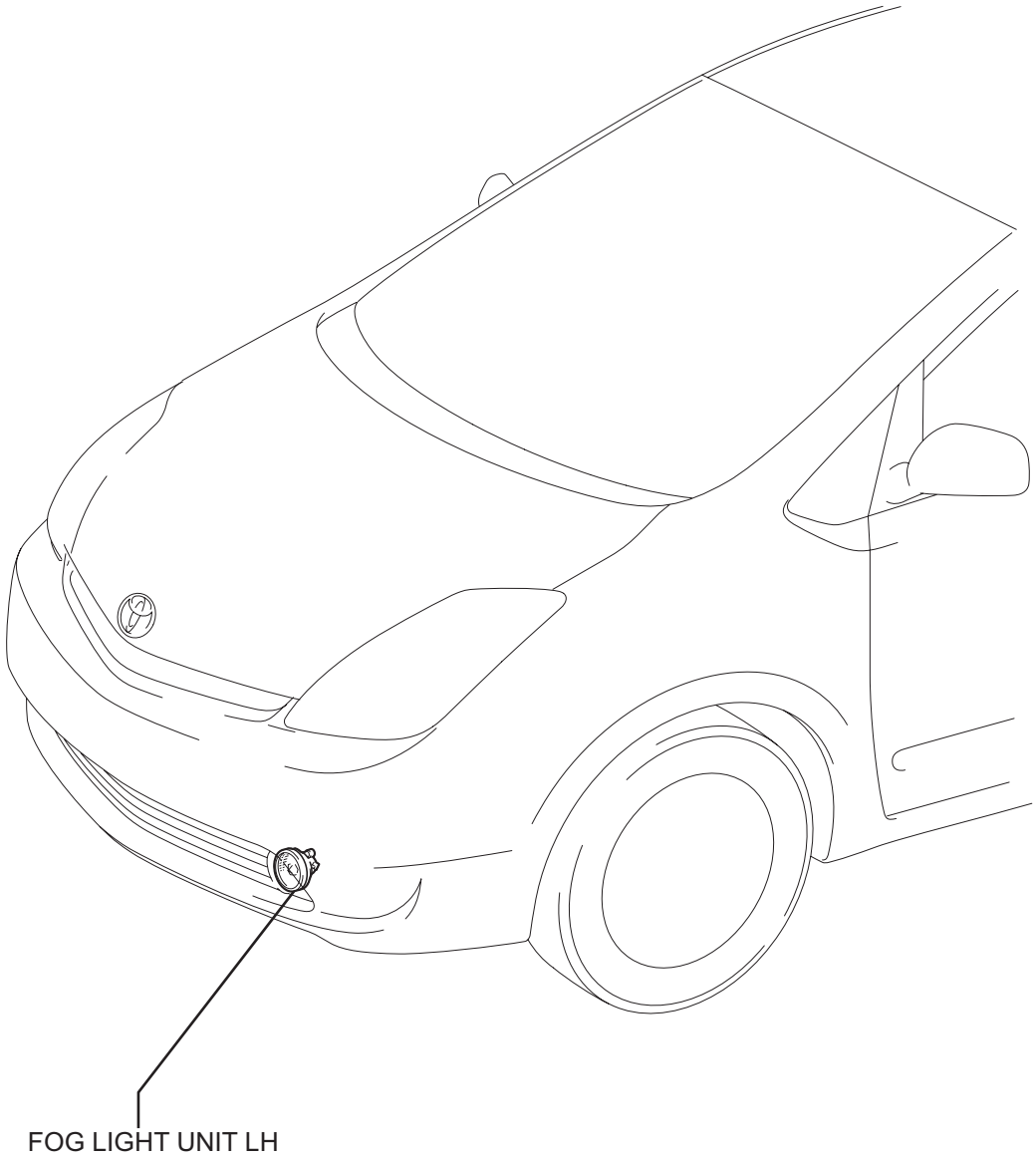

B139854E01

REMOVAL

HINT:
- Use the same procedures for the RH and LH sides.
- The procedures listed below are for the LH side.

1. REMOVE FRONT FENDER LINER LH (See page ET-3)

2. REMOVE FRONT FENDER LINER RH (See page ET-3)

3. REMOVE FRONT BUMPER COVER (See page ET-4)

4. REMOVE RADIATOR GRILLE LOWER LH (See page ET-5)

5. REMOVE FOG LIGHT UNIT LH

(a) Detach the 3 claws and push the fog light unit towards the front of the vehicle.

(b) Remove the fog light bulb from the fog light unit.

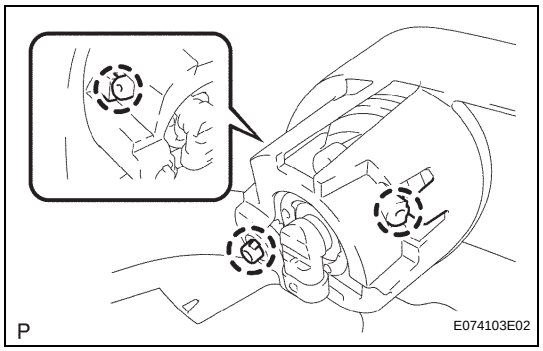

ADJUSTMENT

1. ADJUST FOG LIGHT AIM

(a) Prepare the vehicle by performing the following.
- Ensure there is no damage or deformation to the body around the headlights.
- Fill the fuel tank.
- Make sure that the oil is filled to the specified level.
- Make sure that the coolant is filled to the specified level.
- Inflate the tires to the appropriate pressure (see page TW-3).
- Place the spare tire, tools, and jack in their original position.
- Unload the trunk.
- Sit a person of average weight (68 kg (150 lbs)) in the driver's seat.

(b) Start the engine and let it idle.

(c) From underneath the vehicle, turn the screw to perform the adjustment.
HINT:
- The light moves up when turning the screw clockwise, and moves down when turning the screw counterclockwise.
- When adjusting the fog light, insert a screwdriver into the front fender liner fog light service hole.

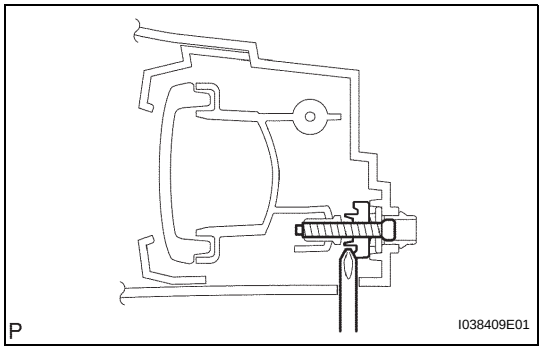

INSTALLATION

HINT:
- Use the same procedures for the RH and LH sides.
- The procedures listed below are for the LH side.

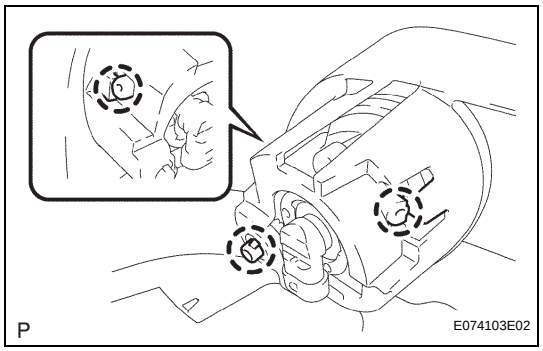

1. INSTALL FOG LIGHT UNIT LH
(a) Install the fog light bulb to the fog light unit.
(b) Attach the 3 claws to install the light unit.

2. INSTALL RADIATOR GRILLE LOWER LH (See page ET-6)

3. INSTALL FRONT BUMPER COVER (See page ET-6)

4. INSTALL FRONT FENDER LINER RH (See page ET-7)

5. INSTALL FRONT FENDER LINER LH (See page ET-7)

6. ADJUST FOG LIGHT AIMING (See page LI-87)

7. CONNECT CABLE TO NEGATIVE BATTERY TERMINAL

8. PERFORM INITIALIZATION
(a) Perform initialization (see page IN-32).
NOTICE:
Certain systems need to be initialized after disconnecting and reconnecting the cable from the negative (-) battery terminal.

REAR COMBINATION LIGHT ASSEMBLY

COMPONENTS

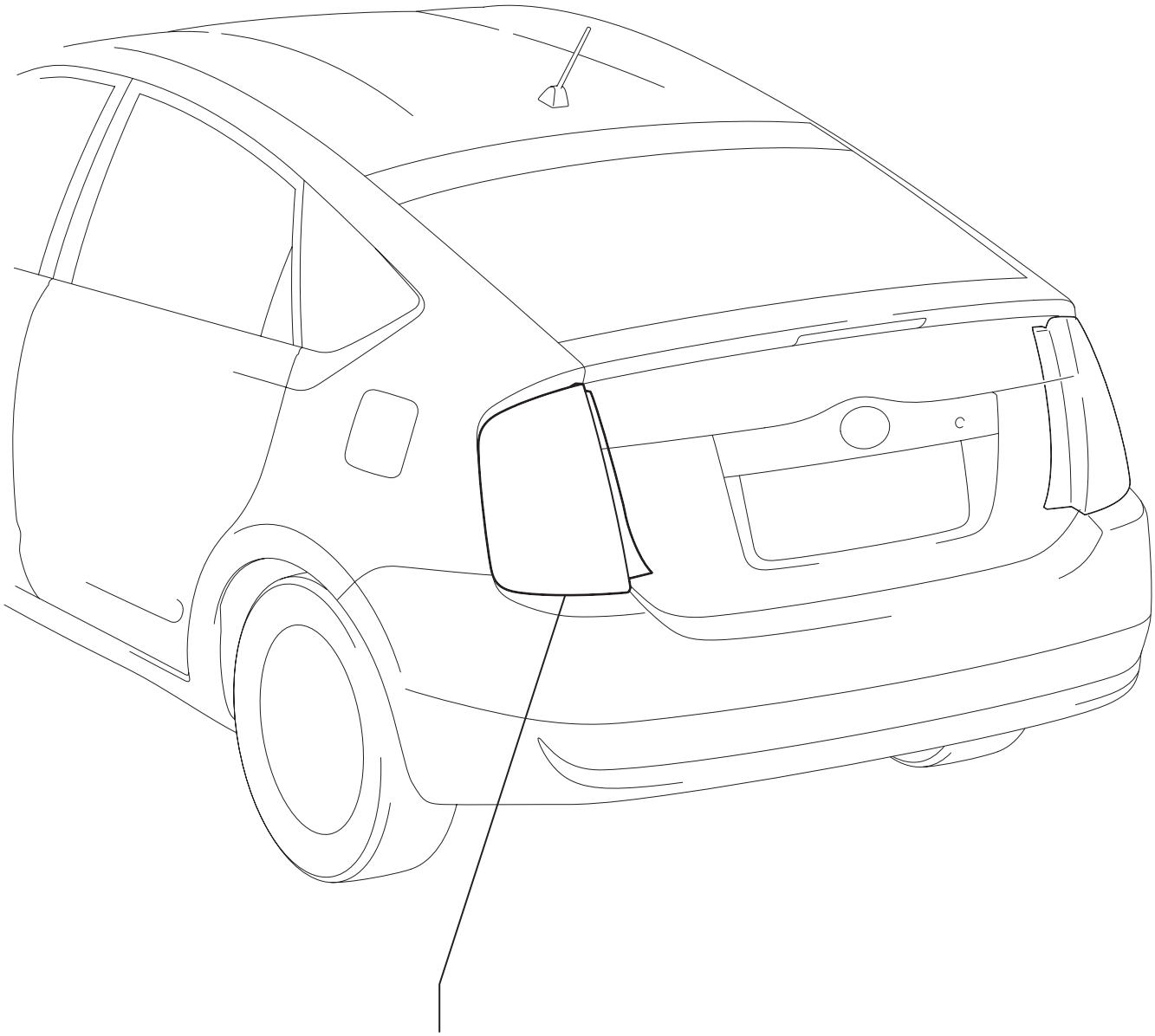

B139861E01

REMOVAL

HINT:
- Use the same procedures for the RH and LH sides.
- The procedures listed below are for the LH side.

1. DISCONNECT CABLE FROM NEGATIVE BATTERY TERMINAL
CAUTION:
Wait at least 90 seconds after disconnecting the cable from the negative (-) battery terminal to prevent airbag and seat belt pretensioner activation.

2. REMOVE REAR COMBINATION LIGHT SERVICE COVER LH

3. REMOVE REAR COMBINATION LIGHT ASSEMBLY LH
(a) Remove the 2 nuts.
(b) Slide the 2 pins towards the back of the vehicle to remove them.
(c) Disconnect the connector and remove the rear combination light.
(d) Remove the 3 bulb sockets and 3 bulbs from the rear combination light.

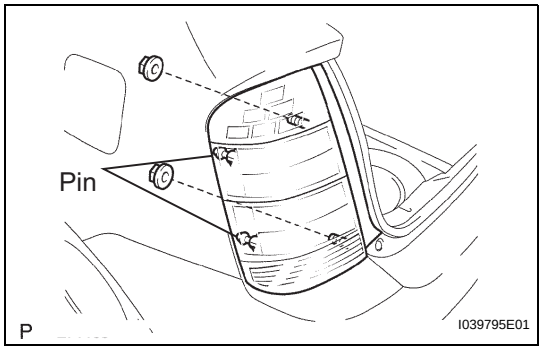

INSTALLATION

HINT:
- Use the same procedures for the RH and LH sides.
- The procedures listed below are for the LH side.

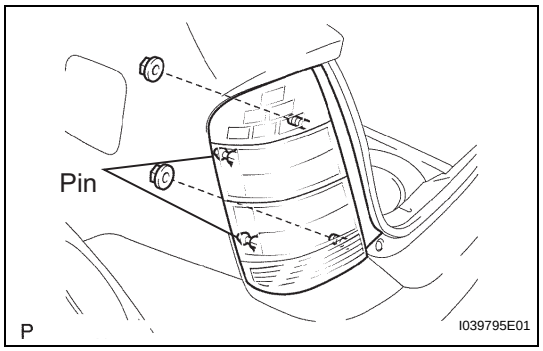

1. INSTALL REAR COMBINATION LIGHT ASSEMBLY LH

(a) Install the 3 bulbs and bulb sockets to the rear combination light.

(b) Connect the connector and install the rear combination light.

(c) Slide the 2 pins towards the back of the vehicle to install them.

(d) Install the 2 nuts.

2. INSTALL REAR COMBINATION LIGHT SERVICE COVER LH

3. CONNECT CABLE TO NEGATIVE BATTERY TERMINAL

4. PERFORM INITIALIZATION

(a) Perform initialization (see page IN-32).

NOTICE:

Certain systems need to be initialized after disconnecting and reconnecting the cable from the negative (-) battery terminal.

LICENSE PLATE LIGHT ASSEMBLY

COMPONENTS

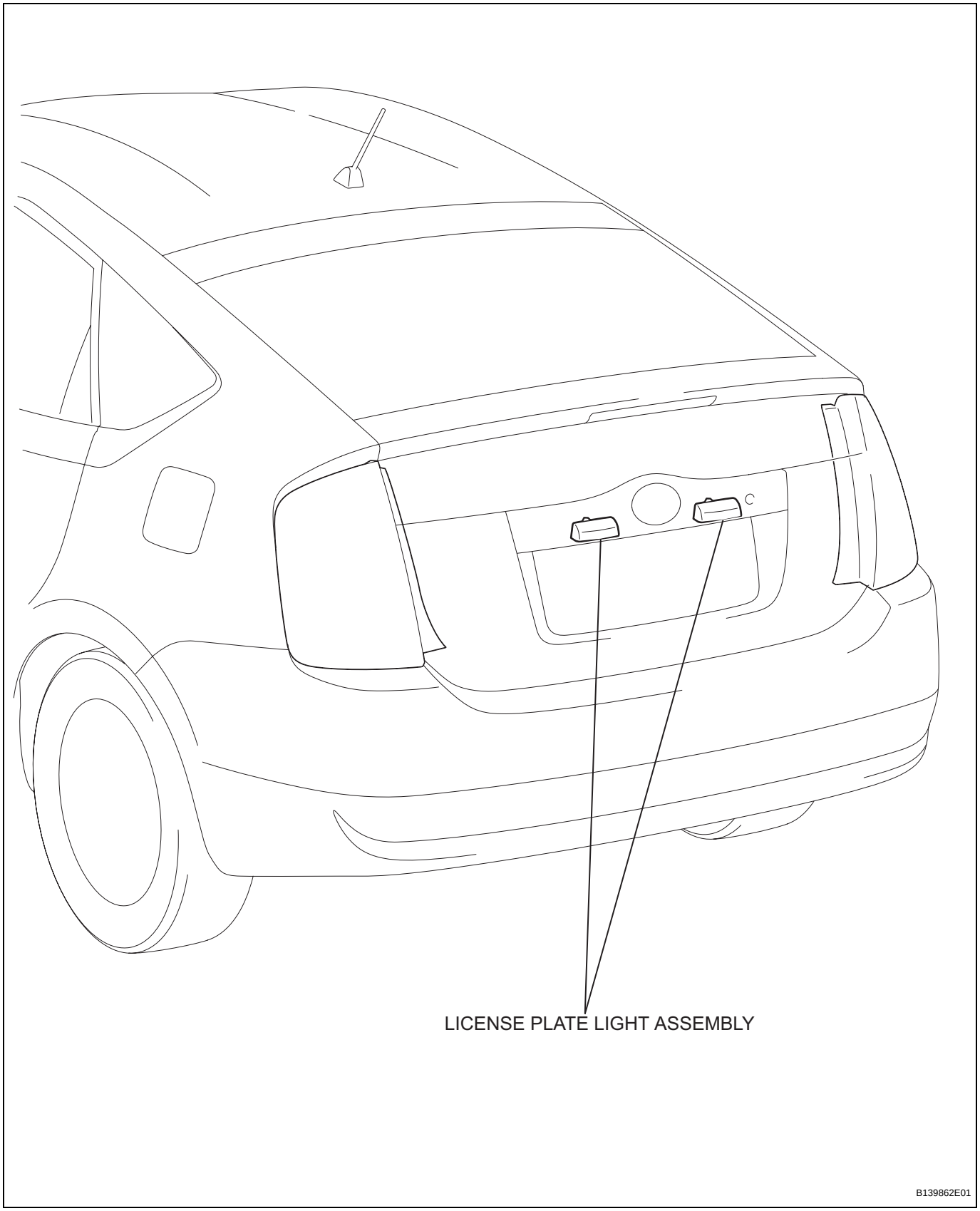

REMOVAL

HINT:
- Use the same procedures for the RH and LH sides.
- The procedures listed below are for the LH side.

1. REMOVE BACK DOOR TRIM BOARD ASSEMBLY (See page ED-43)

2. REMOVE BACK DOOR OUTSIDE GARNISH SUB-ASSEMBLY (See page ET-37)

3. REMOVE LICENSE PLATE LIGHT ASSEMBLY

(a) Remove the light as shown in the illustration.
(b) Disconnect the connector.
(c) Remove the bulb/socket unit from the light.
(d) Remove the bulb from the socket.

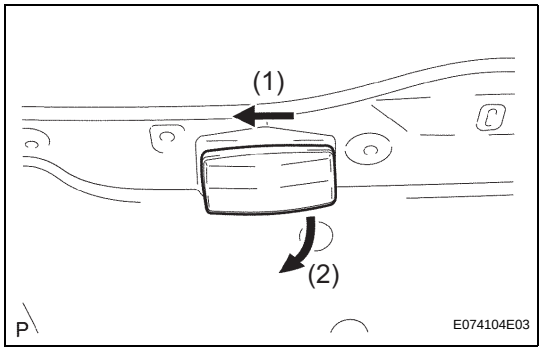

LI

INSTALLATION

HINT:
- Use the same procedures for the RH and LH sides.
- The procedures listed below are for the LH side.

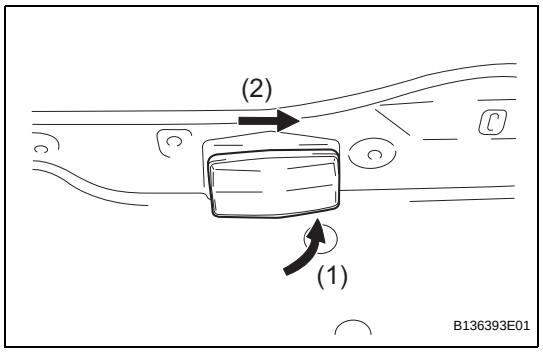

1. INSTALL LICENSE PLATE LIGHT LENS
(a) Install the bulb to the socket.
(b) Install the bulb/socket unit to light.
(c) Connect the connector.
(d) Install the light as shown in the illustration.

2. INSTALL BACK DOOR OUTSIDE GARNISH SUB-ASSEMBLY (See page ET-38)

3. INSTALL BACK DOOR TRIM BOARD ASSEMBLY (See page ED-48)

4. CONNECT CABLE TO NEGATIVE BATTERY TERMINAL

5. PERFORM INITIALIZATION
(a) Perform initialization (see page IN-32).
NOTICE:
Certain systems need to be initialized after disconnecting and reconnecting the cable from the negative (-) battery terminal.

HIGH MOUNTED STOP LIGHT ASSEMBLY

COMPONENTS

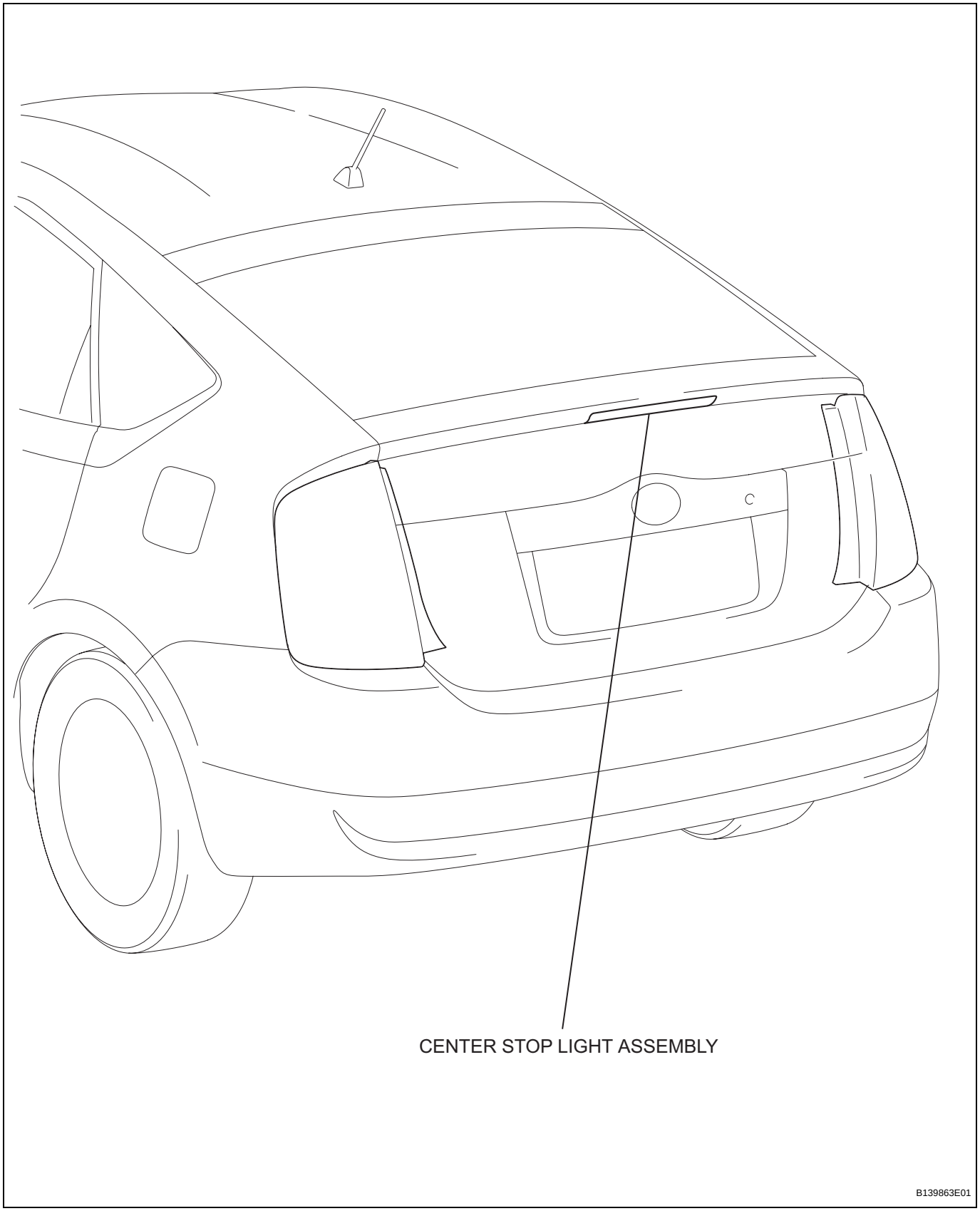

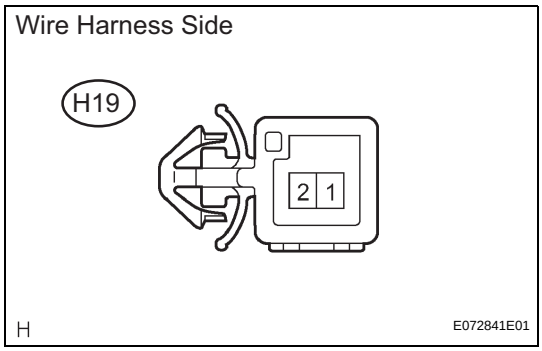

ON-VEHICLE INSPECTION

1. CHECK CENTER STOP LIGHT ASSEMBLY

(a) Disconnect the H19 light connector.

(b) Measure the voltage according to the value(s) in the table below.

Standard voltage

Tester Connection	Condition	Specified Condition
1 - 2	Brake pedal pressed	Below 1 V
1 - 2	Brake pedal depressed	10 to 14 V

REMOVAL

1. **DISCONNECT CABLE FROM NEGATIVE BATTERY TERMINAL**
   CAUTION:
   Wait at least 90 seconds after disconnecting the cable from the negative (-) battery terminal to prevent airbag and seat belt pretensioner activation.

2. **REMOVE BACK DOOR TRIM UPPER PANEL ASSEMBLY (See page ED-44)**

3. **REMOVE CENTER STOP LIGHT ASSEMBLY**
   (a) Disconnect the connector.
   (b) Tie a string around the center stop light assembly cord.

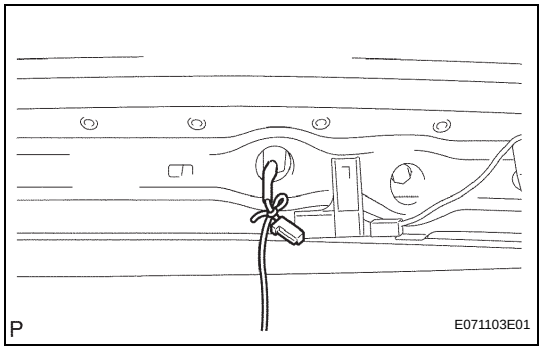

   (c) Remove the 2 screws and the center stop light assembly.
   NOTICE:
   The string will be used when installing, so leave the string as it is inside the back door.

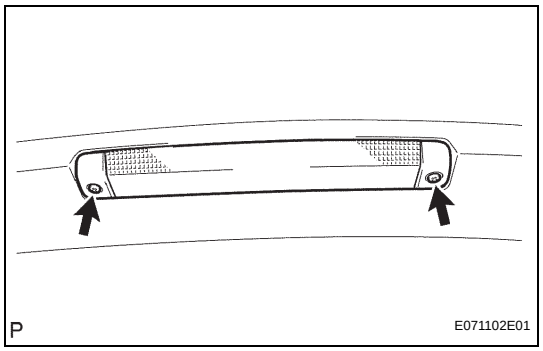

LI

INSTALLATION

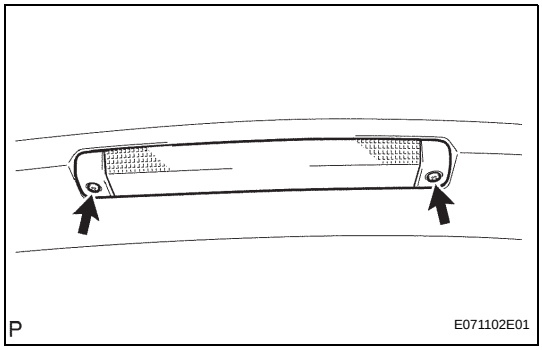

1. **INSTALL BACK DOOR TRIM UPPER PANEL ASSEMBLY (See page ED-47)**

2. **INSTALL CENTER STOP LIGHT ASSEMBLY**
   (a) Install the center stop light with 2 screws.
   (b) Connect the connector.

3. **CONNECT CABLE TO NEGATIVE BATTERY TERMINAL**

4. **PERFORM INITIALIZATION**
   (a) Perform initialization (see page IN-32).
   NOTICE:
   Certain systems need to be initialized after disconnecting and reconnecting the cable from the negative (-) battery terminal.

MAP LIGHT ASSEMBLY

COMPONENTS

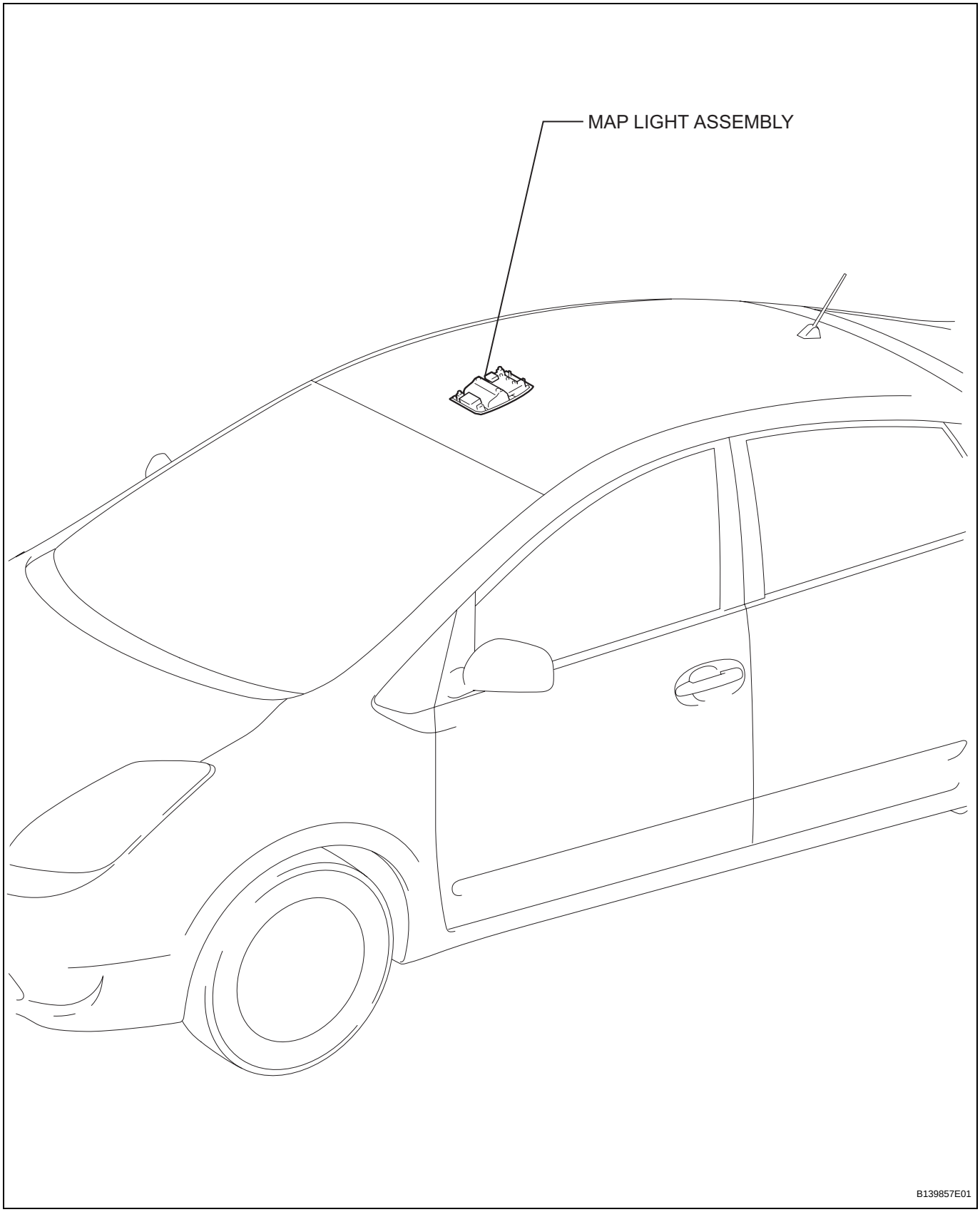

REMOVAL

1. **DISCONNECT CABLE FROM NEGATIVE BATTERY TERMINAL**
   CAUTION:
   Wait at least 90 seconds after disconnecting the cable from the negative (-) battery terminal to prevent airbag and seat belt pretensioner activation.
2. **REMOVE MAP LIGHT ASSEMBLY (See page IR-12)**
3. **REMOVE MAP LIGHT BULB**
   (a) Remove the bulb from the map light.

INSPECTION

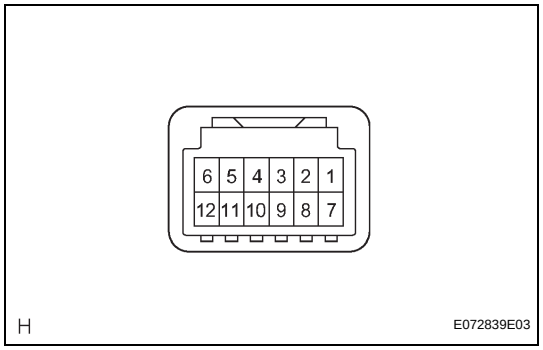

1. **INSPECT MAP LIGHT ASSEMBLY**
   (a) Measure the resistance according to the value(s) in the table below.
   Standard resistance

Tester Connection	Condition	Specified Condition
1 - 3 1 - 4	Switch is OFF	10 kΩ or higher

   If the result is not as specified, replace the light assembly.
   (b) Connect the battery positive (+) lead from the battery to terminal 1 and battery negative (-) lead to terminal 3, then check that the illumination comes on when the switch is in the DOOR position.
   OK:
   Illumination comes on.
   If the result is not as specified, replace the light assembly.
   (c) Connect the battery positive (+) lead from the battery to terminal 1 and battery negative (-) lead to terminal 4, then check that the illumination comes on when the switch is in the ON position.
   OK:
   Illumination comes on.
   If the result is not as specified, replace the light assembly.

LI

INSTALLATION

1. **INSTALL MAP LIGHT BULB**
   (a) Install the bulb to the map light.
2. **INSTALL MAP LIGHT ASSEMBLY (See page IR-15)**
3. **CONNECT CABLE TO NEGATIVE BATTERY TERMINAL**
4. **PERFORM INITIALIZATION**
   (a) Perform initialization (see page IN-32).
   NOTICE:
   Certain systems need to be initialized after disconnecting and reconnecting the cable from the negative (-) battery terminal.

ROOM LIGHT ASSEMBLY

COMPONENTS

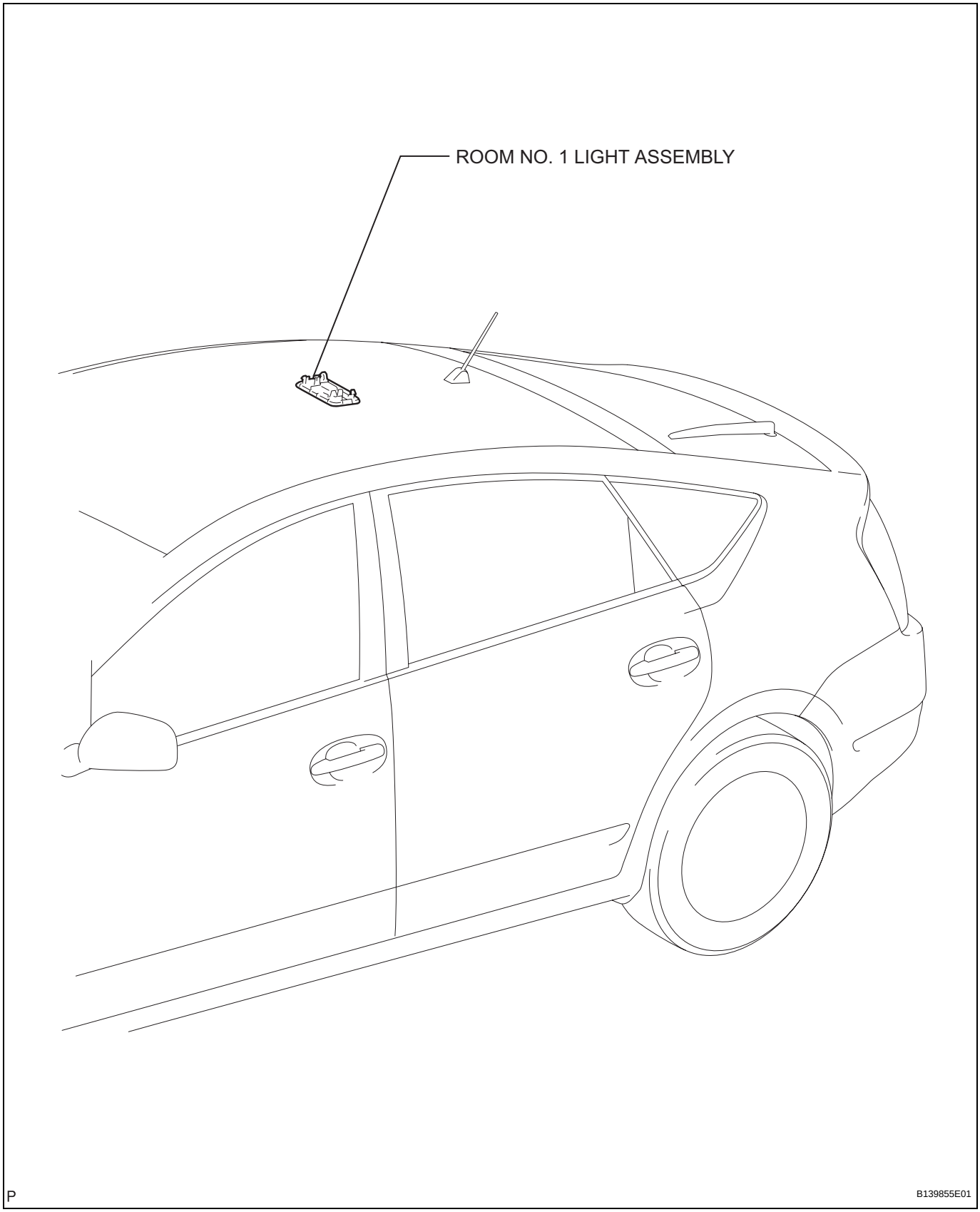

REMOVAL

1. **DISCONNECT CABLE FROM NEGATIVE BATTERY TERMINAL**
   CAUTION:
   Wait at least 90 seconds after disconnecting the cable from the negative (-) battery terminal to prevent airbag and seat belt pretensioner activation.
2. **REMOVE ROOM NO. 1 LIGHT ASSEMBLY (See page IR-12)**
3. **REMOVE ROOM NO. 1 LIGHT BULB**
   (a) Remove the bulb from the room No. 1 light assembly.

INSPECTION

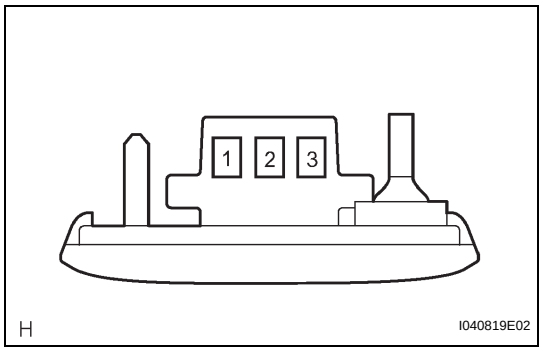

1. **INSPECT ROOM NO. 1 LIGHT ASSEMBLY**
   (a) Measure the resistance according to the value(s) in the table below.
   Standard resistance

Tester Connection	Condition	Specified Condition
1 - 2 1 - 3	Switch is OFF	10 kΩ or higher

   If the result is not as specified, replace the light assembly.
   (b) Connect the battery positive (+) lead from the battery to terminal 1 and battery negative (-) lead to terminal 2, then check that the illumination comes on when the switch is in the DOOR position.
   OK:
   Illumination comes on.
   If the result is not as specified, replace the light assembly.
   (c) Connect the battery positive (+) lead from the battery to terminal 1 and battery negative (-) lead to terminal 3, then check that the illumination comes on when the switch is in the ON position.
   OK:
   Illumination comes on.
   If the result is not as specified, replace the light assembly.

INSTALLATION

1. **INSTALL ROOM NO. 1 LIGHT BULB**
   (a) Install the bulb to the room No. 1 light.
2. **INSTALL ROOM NO. 1 LIGHT ASSEMBLY (See page IR-14)**
3. **CONNECT CABLE TO NEGATIVE BATTERY TERMINAL**
4. **PERFORM INITIALIZATION**
   (a) Perform initialization (see page IN-32).
   NOTICE:
   Certain systems need to be initialized after disconnecting and reconnecting the cable from the negative (-) battery terminal.

DOOR COURTESY LIGHT

ON-VEHICLE INSPECTION

1. INSPECT FRONT DOOR COURTESY LIGHT ASSEMBLY

(a) Connect the battery positive (+) lead from the battery to one of the terminals and battery negative (-) lead to the other terminal, then check that the light comes on.

OK:

Light comes on.

If the result is not as specified, replace the light assembly.

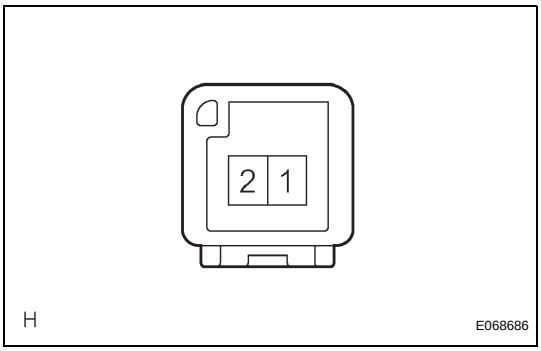

GLOVE BOX LIGHT

ON-VEHICLE INSPECTION

1. INSPECT GLOVE BOX LIGHT ASSEMBLY

(a) Connect the positive (+) lead from the battery to terminal 2 and the negative (-) lead to terminal 1, then check that the light comes on.

OK:

Light comes on.

If the result is not as specified, replace the light.

VANITY LIGHT

ON-VEHICLE INSPECTION

1. INSPECT VISOR ASSEMBLY (VANITY LIGHT SWITCH)

(a) Measure the resistance according to the value(s) in the table below.

Standard resistance

Tester Connection	Condition	Specified Condition
1 - 2	Switch is OFF	10 kΩ or higher
1 - 2	Switch is ON	Below 1 Ω

If the result is not as specified, replace the visor assembly.

2. INSPECT VANITY LIGHT ASSEMBLY

(a) Connect the battery positive (+) lead from the battery to one of the terminals and battery negative (-) lead to the other terminal, then check that the light comes on.

OK:

Light comes on.

If the result is not as specified, replace the light assembly.

HEADLIGHT DIMMER SWITCH

COMPONENTS

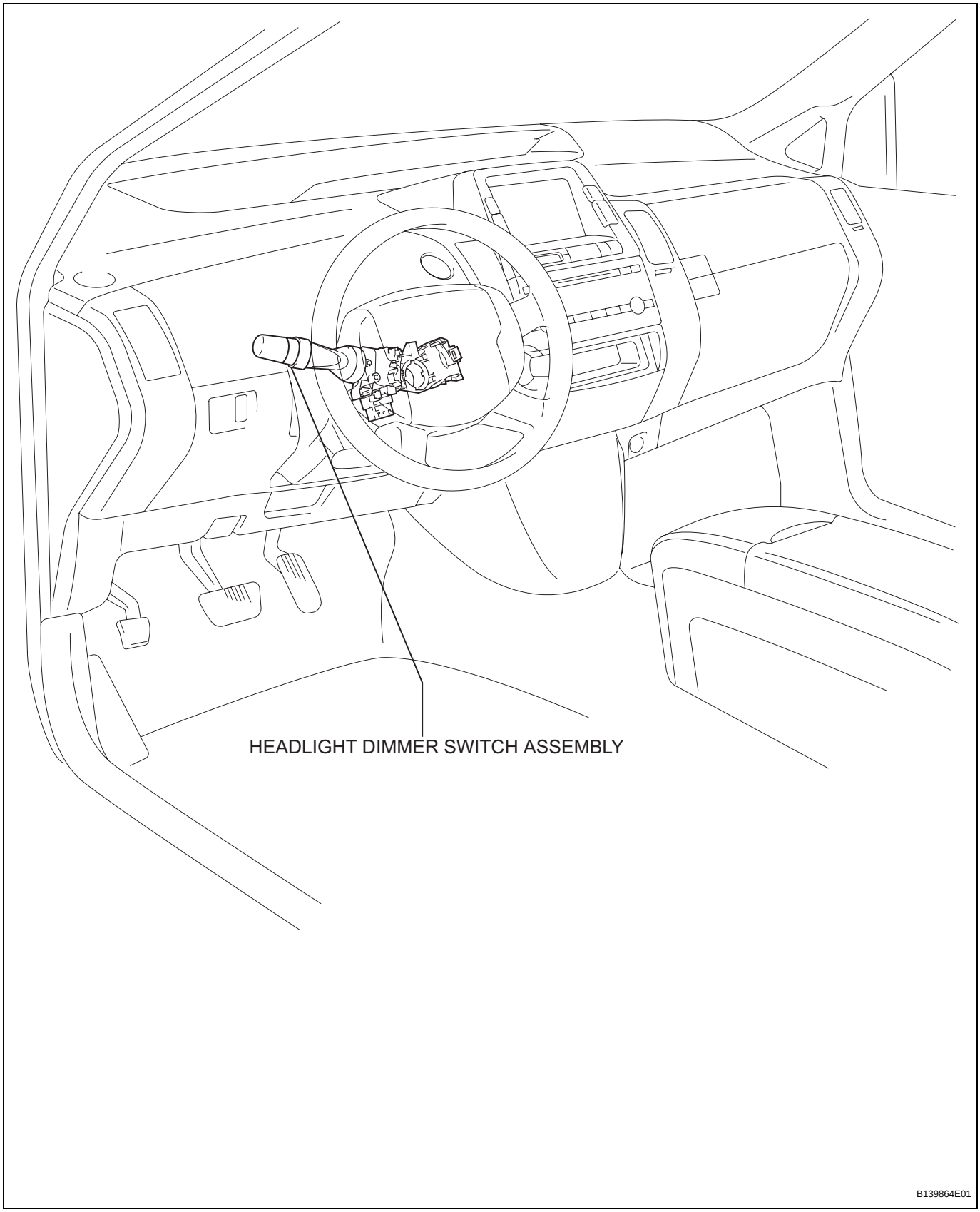

REMOVAL

1. **DISCONNECT CABLE FROM NEGATIVE BATTERY TERMINAL**
   CAUTION:
   Wait at least 90 seconds after disconnecting the cable from the negative (-) battery terminal to prevent airbag and seat belt pretensioner activation.
2. **REMOVE NO. 2 STEERING WHEEL COVER LOWER**
3. **REMOVE NO. 3 STEERING WHEEL COVER LOWER**
4. **REMOVE STEERING PAD ASSEMBLY (See page RS-268)**
5. **REMOVE STEERING WHEEL ASSEMBLY (See page SR-8)**
6. **REMOVE STEERING COLUMN COVER (See page SR-8)**
7. **REMOVE SPIRAL CABLE SUB-ASSEMBLY (See page RS-278)**
8. **REMOVE WIPER AND WASHER SWITCH ASSEMBLY (See page WW-29)**
9. **REMOVE HEADLIGHT DIMMER SWITCH ASSEMBLY**
   (a) Disconnect the connectors.
   (b) Remove the band clamp as shown in the illustration.

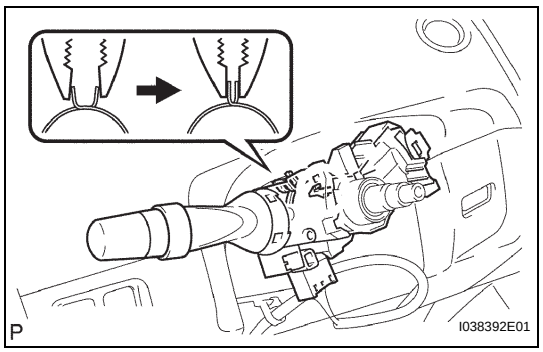

   (c) Detach the claws and remove the headlight dimmer switch.

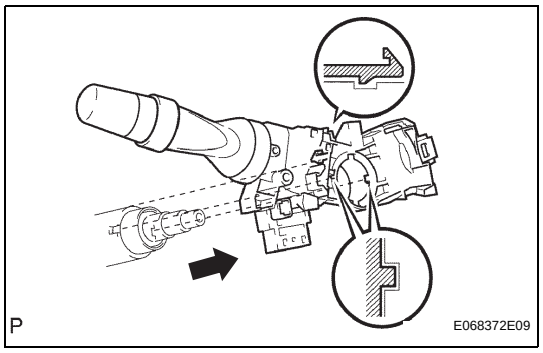

LI

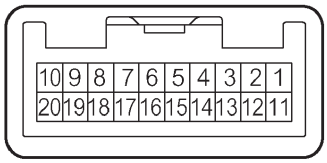

H

E068152E14

INSPECTION

1. INSPECT HEADLIGHT DIMMER SWITCH ASSEMBLY

(a) Inspect the light control switch.

(1) Measure the resistance according to the value(s) in the table below.

Standard resistance

Tester Connection	Condition	Specified Condition
12 - 18	OFF	10 kΩ or higher
12 - 19		
12 - 20		
12 - 18	TAIL	Below 1 Ω
12 - 18 12 - 20	HEAD	Below 1 Ω
12 - 19	AUTO	Below 1 Ω

If the result is not as specified, replace the switch assembly.

(b) Inspect the headlight dimmer switch.

(1) Measure the resistance according to the value(s) in the table below.

Standard resistance

Tester Connection	Condition	Specified Condition
11 - 12	FLASH	Below 1 Ω
11 - 17		
12 - 16	LOW BEAM	Below 1 Ω
11 - 12	HIGH BEAM	Below 1 Ω

If the result is not as specified, replace the switch assembly.

(c) Inspect the turn signal switch.

(1) Measure the resistance according to the value(s) in the table below.

Standard resistance

Tester Connection	Condition	Specified Condition
12 - 13	Right turn	Below 1 Ω
12 - 13	Neutral	10 kΩ or higher
12 - 15		
12 - 15	Left turn	Below 1 Ω

If the result is not as specified, replace the switch assembly.

(d) Inspect the fog light switch.

(1) Measure the resistance according to the value(s) in the table below.

Standard resistance

Tester connection	Condition	Specified condition
3 - 4	OFF	10 kΩ or higher
3 - 4	Front fog light switch ON	Below 1 Ω

If the result is not as specified, replace the switch assembly.

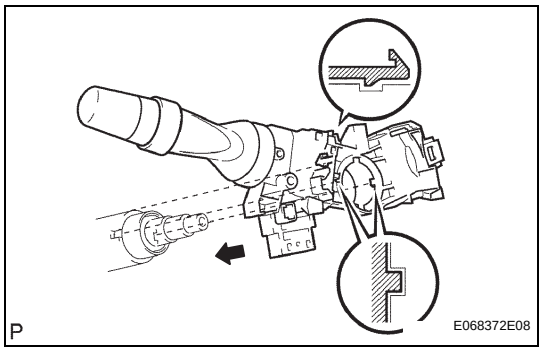

INSTALLATION

1. **INSTALL HEADLIGHT DIMMER SWITCH ASSEMBLY**
   (a) Insert the headlight dimmer switch assembly so that its recessed portion matches that of the steering column shaft.

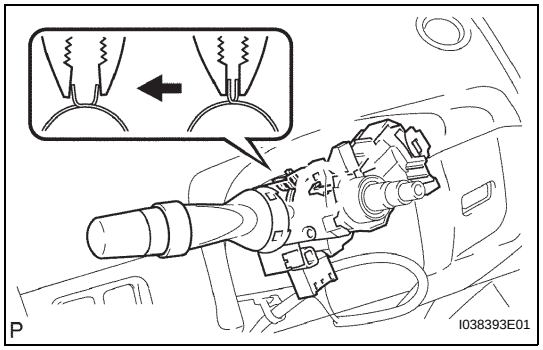

   (b) Install the headlight dimmer switch with the band clamp and claw.
   (c) Connect the connectors.

2. **INSTALL WIPER AND WASHER SWITCH ASSEMBLY (See page WW-29)**
3. **INSTALL SPIRAL CABLE SUB-ASSEMBLY (See page RS-278)**
4. **INSTALL STEERING COLUMN COVER (See page SR-14)**
5. **ADJUST SPIRAL CABLE SUB-ASSEMBLY (See page RS-279)**
6. **INSPECT STEERING WHEEL CENTER POINT (See page SR-15)**
7. **INSTALL STEERING WHEEL ASSEMBLY (See page SR-15)**
8. **INSTALL STEERING PAD ASSEMBLY (See page RS-269)**
9. **INSTALL NO. 3 STEERING WHEEL COVER LOWER**
10. **INSTALL NO. 2 STEERING WHEEL COVER LOWER**
11. **CONNECT CABLE TO NEGATIVE BATTERY TERMINAL**
12. **INSPECT STEERING PAD ASSEMBLY (See page RS-269)**
13. **CHECK SRS WARNING LIGHT (See page RS-269)**
14. **PERFORM INITIALIZATION**
    (a) Perform initialization (see page IN-32).
    NOTICE:
    Certain systems need to be initialized after disconnecting and reconnecting the cable from the negative (-) battery terminal.

HAZARD WARNING SWITCH

COMPONENTS

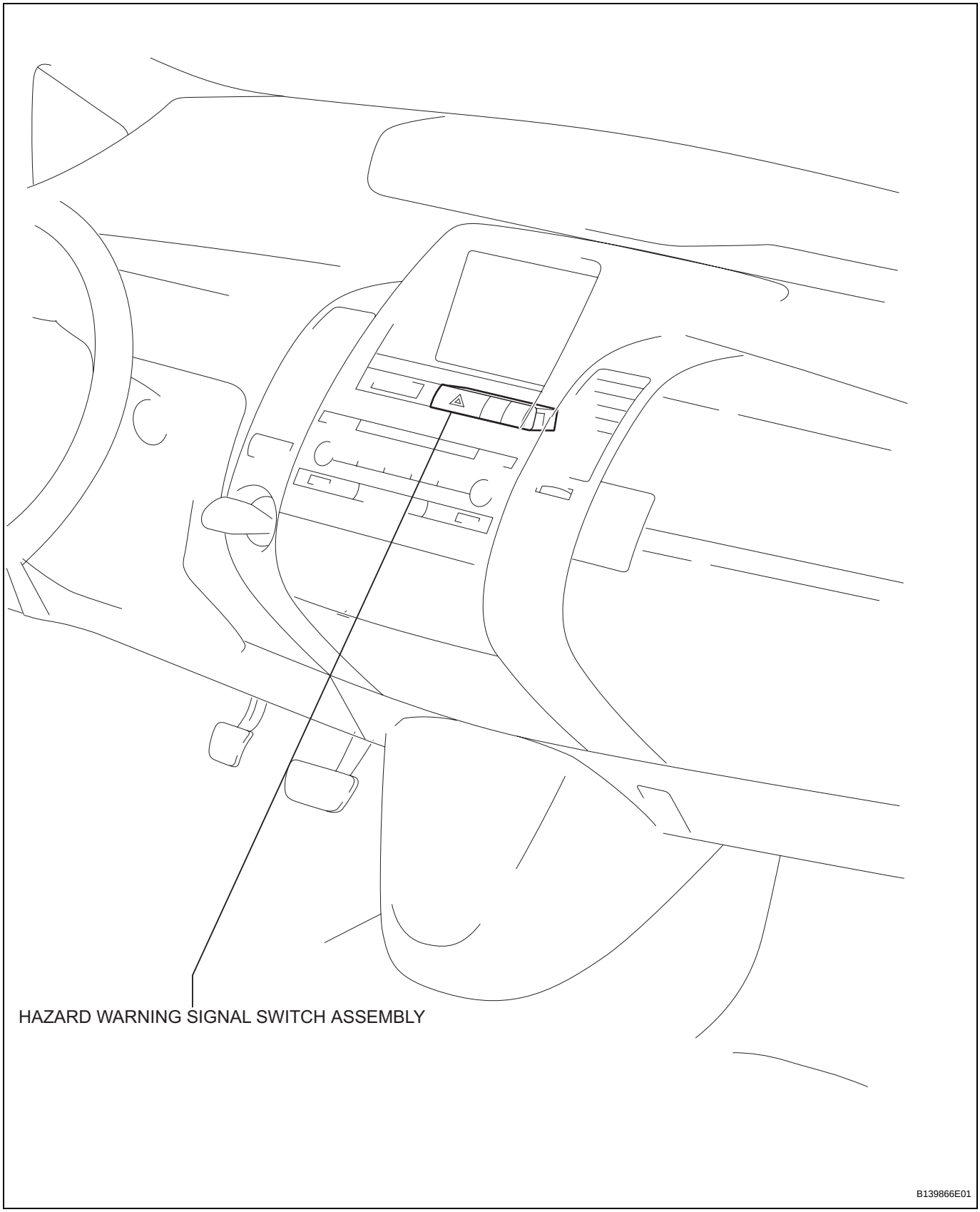

REMOVAL

1. DISCONNECT CABLE FROM NEGATIVE BATTERY TERMINAL

CAUTION:

Wait at least 90 seconds after disconnecting the cable from the negative (-) battery terminal to prevent airbag and seat belt pretensioner activation.

2. REMOVE HAZARD WARNING SIGNAL SWITCH ASSEMBLY

(a) Remove the switch.

INSPECTION

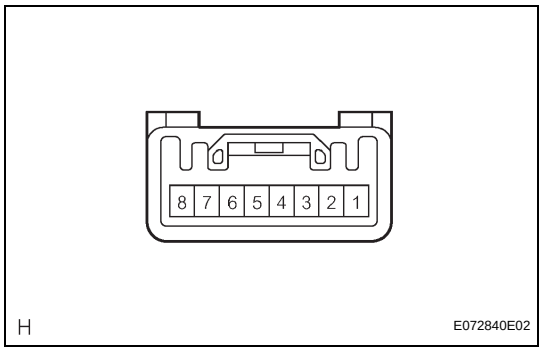

1. INSPECT HAZARD WARNING SIGNAL SWITCH ASSEMBLY

(a) Measure the resistance according to the value(s) in the table below.

Standard resistance

Tester Connection	Condition	Specified Condition
2 - 3	Hazard warning switch ON	Below 1 Ω
2 - 3	Hazard warning switch OFF	10 kΩ or higher

If the result is not as specified, replace the switch assembly.

(b) Connect the battery positive (+) lead from the battery to terminal 4 and battery negative (-) lead to terminal 1, then check that the illumination comes on.

OK:

Illumination comes on.

If the result is not as specified, replace the switch assembly.

LI

INSTALLATION

1. INSTALL HAZARD WARNING SIGNAL SWITCH ASSEMBLY

(a) Install the switch.

2. CONNECT CABLE TO NEGATIVE BATTERY TERMINAL

3. PERFORM INITIALIZATION

(a) Perform initialization (see page IN-32).

NOTICE:
Certain systems need to be initialized after disconnecting and reconnecting the cable from the negative (-) battery terminal.

STOP LIGHT SWITCH

COMPONENTS

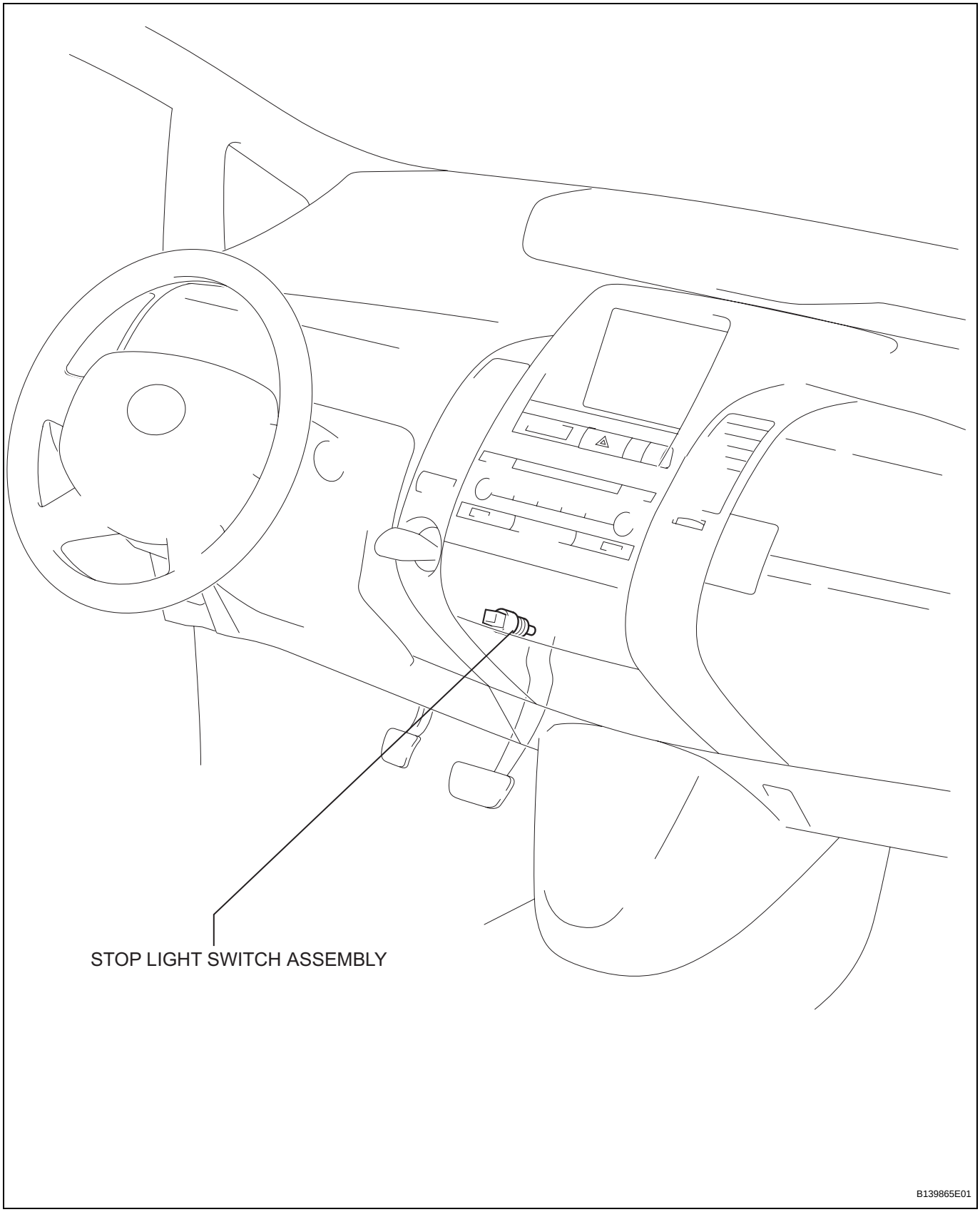

REMOVAL

1. **DISCONNECT CABLE FROM NEGATIVE BATTERY TERMINAL**
   CAUTION:
   Wait at least 90 seconds after disconnecting the cable from the negative (-) battery terminal to prevent airbag and seat belt pretensioner activation.

2. **REMOVE STOP LIGHT SWITCH ASSEMBLY (See page BR-22)**

INSPECTION

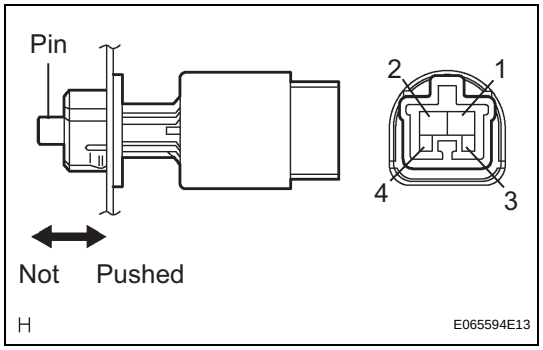

1. **INSPECT STOP LIGHT SWITCH ASSEMBLY**
   (a) Measure the resistance according to the value(s) in the table below.
   Standard resistance

Tester Connection	Condition	Specified Condition
1 - 2	Switch pin not pushed	Below 1 Ω
3 - 4	Switch pin not pushed	10 kΩ or higher
1 - 2	Switch pin pushed	10 kΩ or higher
3 - 4	Switch pin pushed	10 kΩ or higher

If the result is not as specified, replace the switch assembly.

LI

INSTALLATION

1. **INSTALL STOP LIGHT SWITCH ASSEMBLY (See page BR-24)**
2. **CONNECT CABLE TO NEGATIVE BATTERY TERMINAL**
3. **PERFORM INITIALIZATION**
   (a) Perform initialization (see page IN-32).
   NOTICE:
   Certain systems need to be initialized after disconnecting and reconnecting the cable from the negative (-) battery terminal.

FRONT DOOR COURTESY SWITCH

COMPONENTS

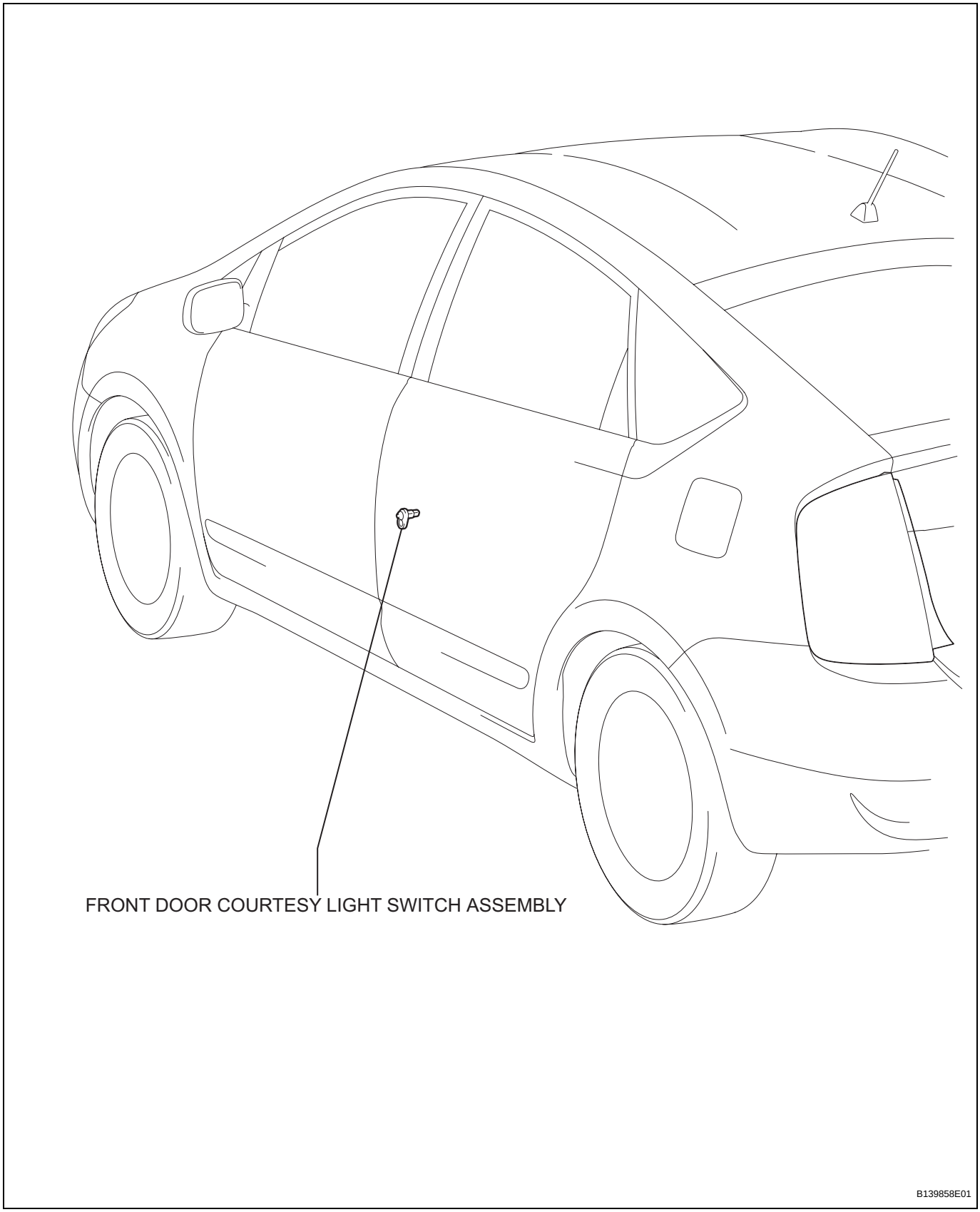

REMOVAL

1. **DISCONNECT CABLE FROM NEGATIVE BATTERY TERMINAL**
   CAUTION:
   Wait at least 90 seconds after disconnecting the cable from the negative (-) battery terminal to prevent airbag and seat belt pretensioner activation.

2. **REMOVE FRONT DOOR COURTESY LIGHT SWITCH ASSEMBLY**
   (a) Remove the bolt and switch.
   (b) Disconnect the connector.

INSPECTION

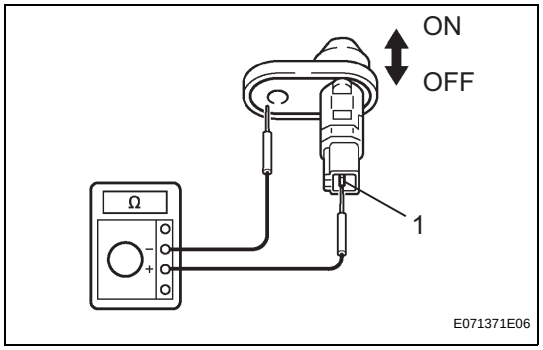

1. **INSPECT FRONT DOOR COURTESY LIGHT SWITCH ASSEMBLY**
   (a) Measure the resistance according to the value(s) in the table below.
   Standard resistance

Tester Connection	Condition	Specified Condition
1 - Body ground	OFF	10 kΩ or higher
1 - Body ground	ON	Below 1 Ω

If the result is not as specified, replace the switch assembly.

LI

INSTALLATION

1. INSTALL FRONT DOOR COURTESY LIGHT SWITCH ASSEMBLY

(a) Connect the connector.

(b) Install the switch with the bolt.

2. CONNECT CABLE TO NEGATIVE BATTERY TERMINAL

3. PERFORM INITIALIZATION

(a) Perform initialization (see page IN-32).

NOTICE:

Certain systems need to be initialized after disconnecting and reconnecting the cable from the negative (-) battery terminal.

REAR DOOR COURTESY SWITCH

COMPONENTS

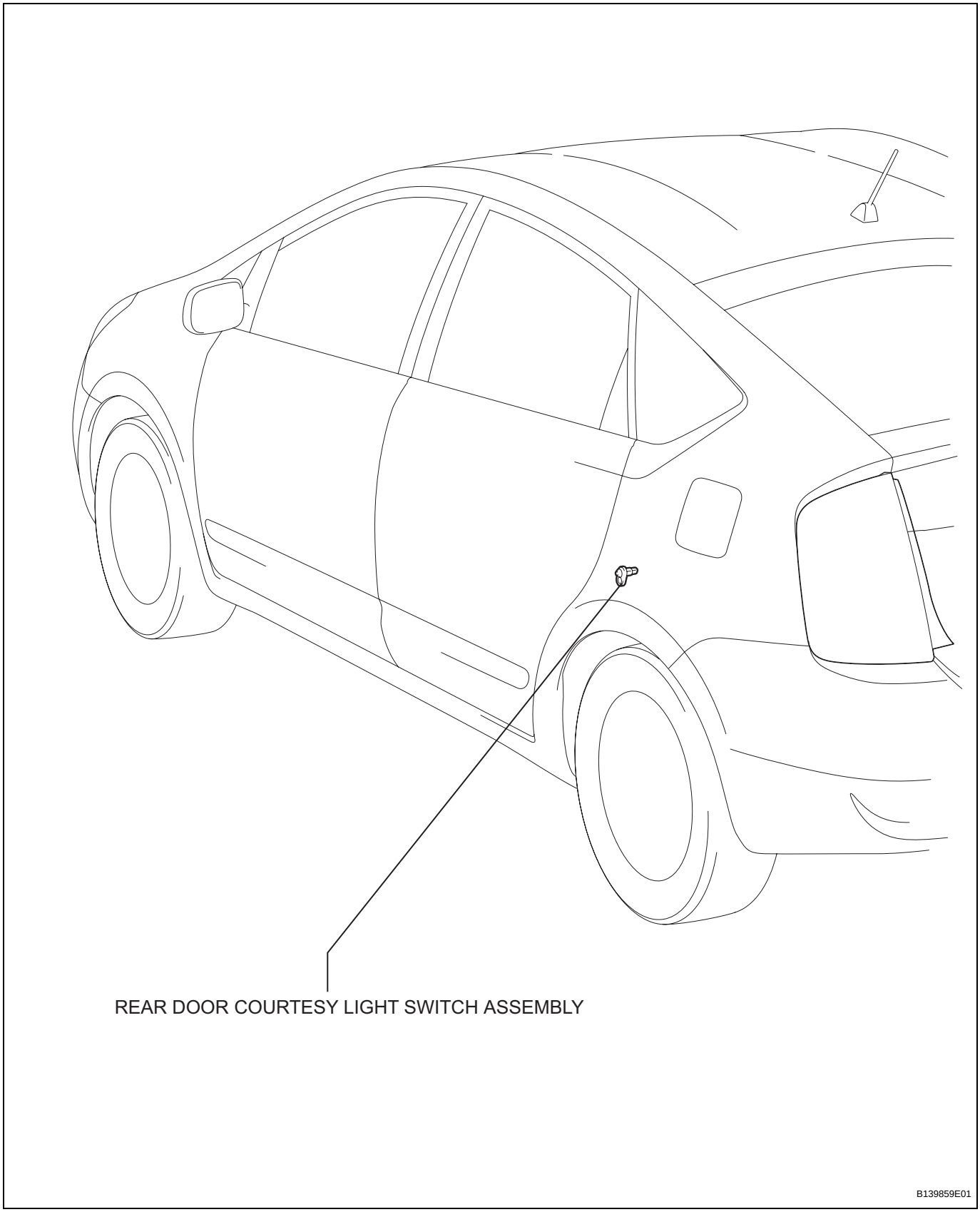

REMOVAL

1. DISCONNECT CABLE FROM NEGATIVE BATTERY TERMINAL

CAUTION:

Wait at least 90 seconds after disconnecting the cable from the negative (-) battery terminal to prevent airbag and seat belt pretensioner activation.

2. REMOVE REAR DOOR COURTESY LIGHT SWITCH ASSEMBLY

(a) Remove the bolt and switch.

(b) Disconnect the connector.

INSPECTION

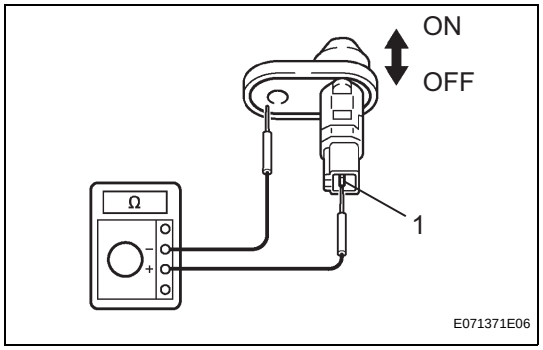

1. INSPECT REAR DOOR COURTESY LIGHT SWITCH ASSEMBLY

(a) Measure the resistance according to the value(s) in the table below.

Standard resistance

Tester Connection	Condition	Specified Condition
1 - Body ground	OFF	10 kΩ or higher
1 - Body ground	ON	Below 1 Ω

If the result is not as specified, replace the switch assembly.

LI

INSTALLATION

1. INSTALL REAR DOOR COURTESY LIGHT SWITCH ASSEMBLY

(a) Connect the connector.

(b) Install the switch with the bolt.

2. CONNECT CABLE TO NEGATIVE BATTERY TERMINAL

3. PERFORM INITIALIZATION

(a) Perform initialization (see page IN-32).

NOTICE:

Certain systems need to be initialized after disconnecting and reconnecting the cable from the negative (-) battery terminal.

BACK DOOR COURTESY SWITCH

COMPONENTS

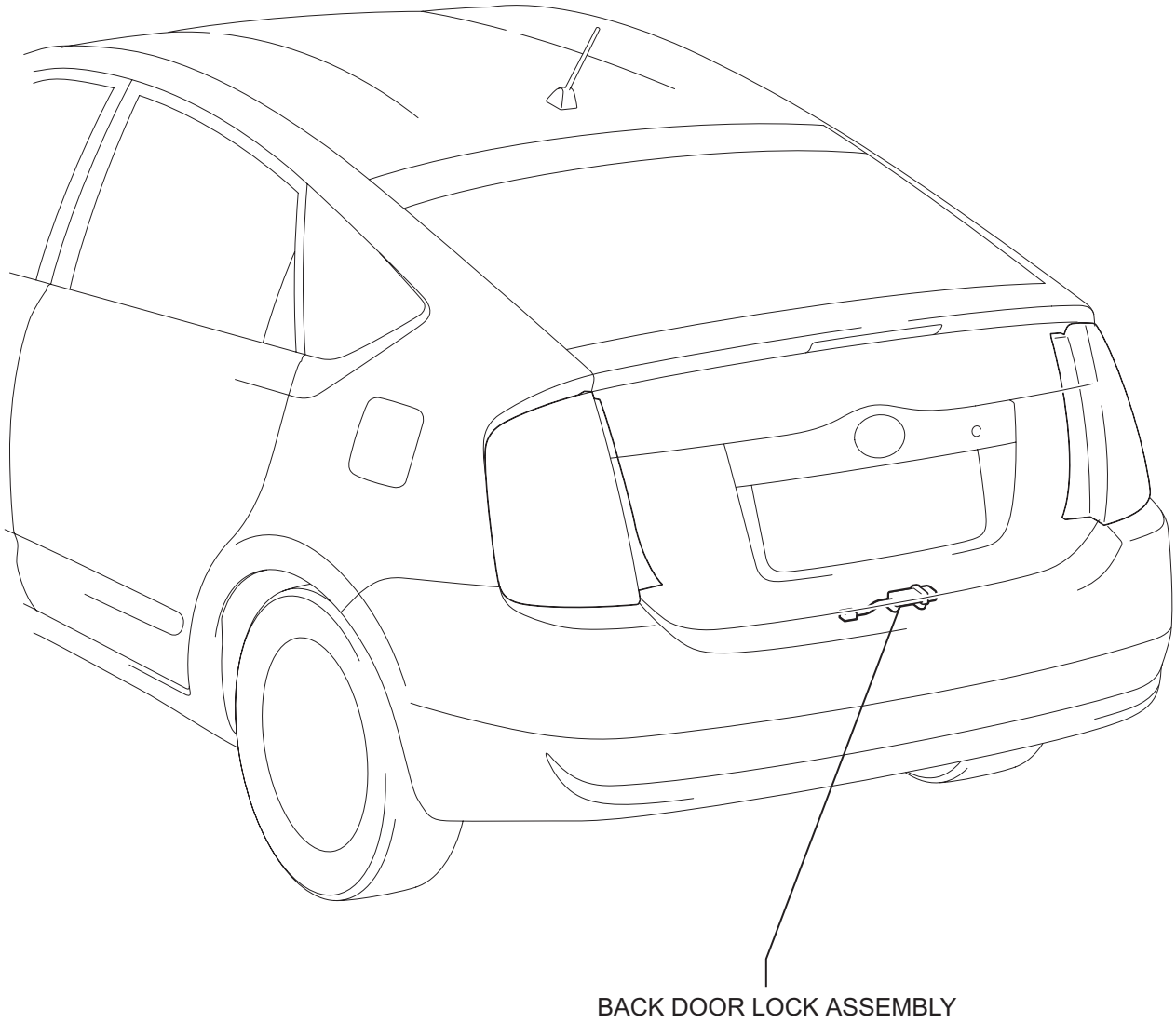

B139876E01

REMOVAL

1. **DISCONNECT CABLE FROM NEGATIVE BATTERY TERMINAL**
   CAUTION:
   Wait at least 90 seconds after disconnecting the cable from the negative (-) battery terminal to prevent airbag and seat belt pretensioner activation.

2. **REMOVE BACK DOOR LOCK ASSEMBLY (See page ED-45)**

INSPECTION

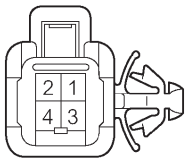

E054740E03

1. **INSPECT BACK DOOR LOCK ASSEMBLY (BACK DOOR COURTESY SWITCH)**
   (a) Measure the resistance according to the value(s) in the table below.
   Standard resistance

Tester Connection	Condition	Specified Condition
1 - 2	Back door is closed	10 kΩ or higher
1 - 2	Back door is opened	Below 1 Ω

If the result is not as specified, replace the back door lock assembly.

LI

INSTALLATION

1. **INSTALL BACK DOOR LOCK ASSEMBLY (See page ED-46)**
2. **CONNECT CABLE TO NEGATIVE BATTERY TERMINAL**
3. **PERFORM INITIALIZATION**
   (a) Perform initialization (see page IN-32).
   NOTICE:
   Certain systems need to be initialized after disconnecting and reconnecting the cable from the negative (-) battery terminal.

HEIGHT CONTROL SENSOR

COMPONENTS

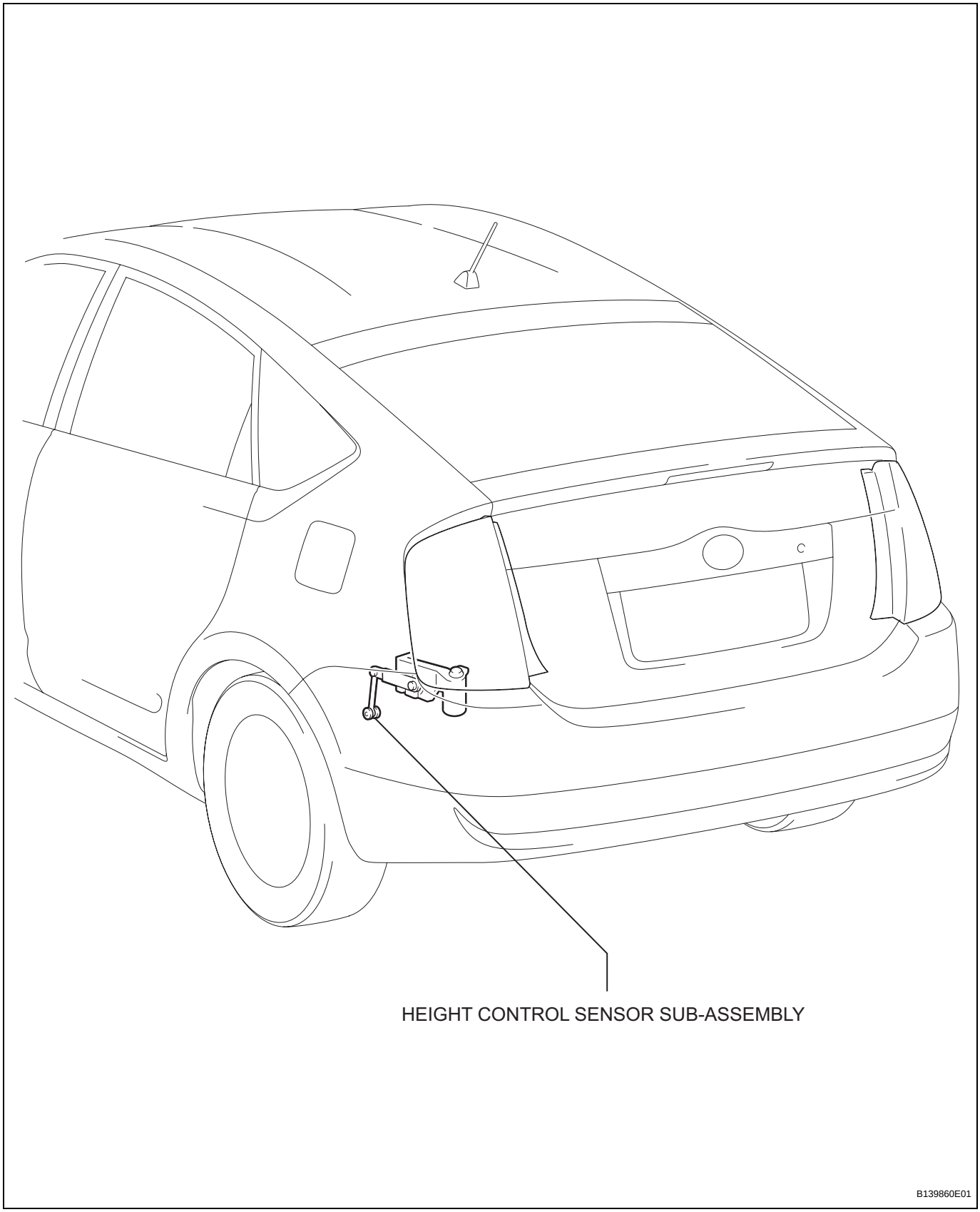

REMOVAL

1. **DISCONNECT CABLE FROM NEGATIVE BATTERY TERMINAL**
   CAUTION:
   Wait at least 90 seconds after disconnecting the cable from the negative (-) battery terminal to prevent airbag and seat belt pretensioner activation.

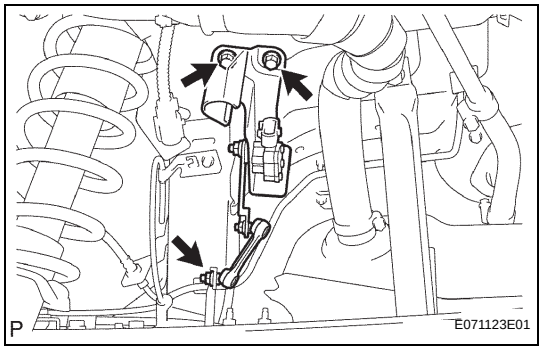

2. **REMOVE HEIGHT CONTROL SENSOR SUB-ASSEMBLY**
   (a) Disconnect the connector.
   (b) Remove the nut and disconnect the height control sensor link from the rear axle beam.
   (c) Remove the 2 bolts and height control sensor.

INSPECTION

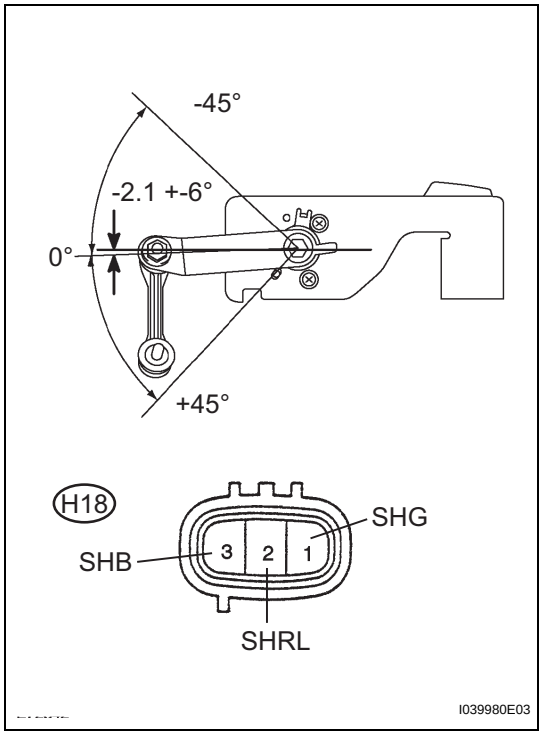

1. **INSPECT HEIGHT CONTROL SENSOR SUB-ASSEMBLY**
   (a) Connect 3 dry cell batteries (1.5 V) in a series.
   (b) Connect the positive (+) lead from the batteries to terminal 3 and negative (-) lead to terminal 1.
   (c) Measure the voltage between the terminal 1 and 2 when slowly move the link up and down.
   Standard voltage

Tester Connection	Condition	Specified Condition
1 - 2	+45° (High)	Approx. 4.5 V
1 - 2	0° (Normal)	Approx. 2.5 V
1 - 2	-45° (Low)	Approx. 0.5 V

   If the result is not as specified, replace the sensor sub-assembly.

INSTALLATION

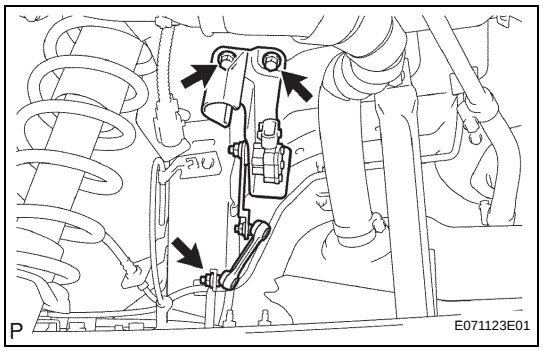

1. **INSTALL HEIGHT CONTROL SENSOR SUB-ASSEMBLY**
   (a) Connect the connector.
   (b) Connect the height control sensor link to the rear axle beam with the nut.
   (c) Install the height control sensor with the 2 bolts.

2. **PERFORM INITIALIZATION**
   (a) Perform initialization (see page IN-32).
   NOTICE:
   Certain systems need to be initialized after disconnecting and reconnecting the cable from the negative (-) battery terminal.

3. ADJUST HEADLIGHT AIM ONLY (See page LI-80)

HEADLIGHT LEVELING ECU

COMPONENTS

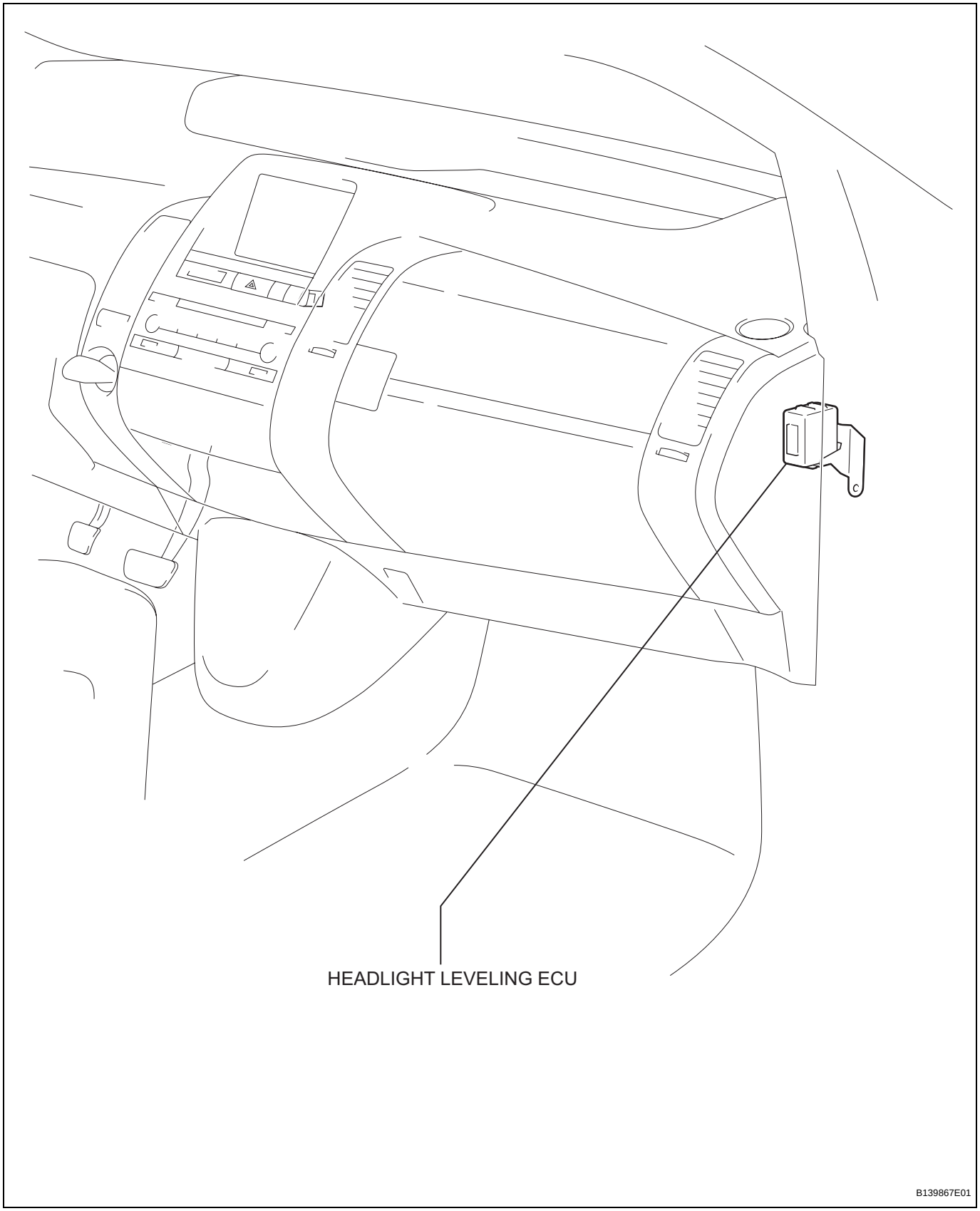

LI

REMOVAL

1. **DISCONNECT CABLE FROM NEGATIVE BATTERY TERMINAL**
   CAUTION:
   Wait at least 90 seconds after disconnecting the cable from the negative (-) battery terminal to prevent airbag and seat belt pretensioner activation.
2. **REMOVE GLOVE COMPARTMENT DOOR ASSEMBLY (See page IP-7)**
3. **REMOVE ECM (See page ES-469)**
4. **REMOVE HEADLIGHT LEVELING ECU**
   (a) Disconnect the ECU connector.
   (b) Remove the bolt and ECU.

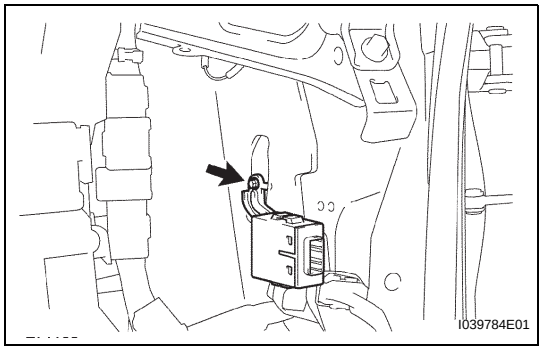

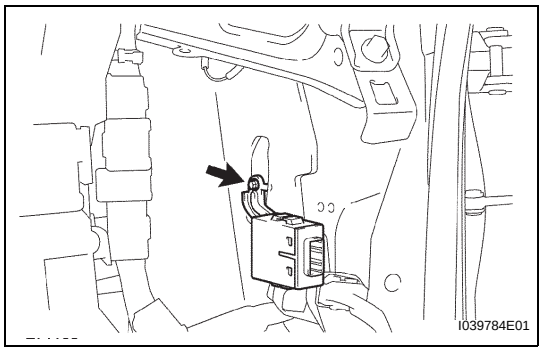

INSTALLATION

1. **INSTALL HEADLIGHT LEVELING ECU**
   (a) Install the ECU with the bolt.
   (b) Connect the connector.
2. **INSTALL ECM (See page ES-470)**
3. **INSTALL GLOVE COMPARTMENT DOOR ASSEMBLY (See page IP-12)**
4. **CONNECT CABLE TO NEGATIVE BATTERY TERMINAL**
5. **PERFORM INITIALIZATION**
   (a) Perform initialization (see page IN-32).
   NOTICE:
   Certain systems need to be initialized after disconnecting and reconnecting the cable from the negative (-) battery terminal.

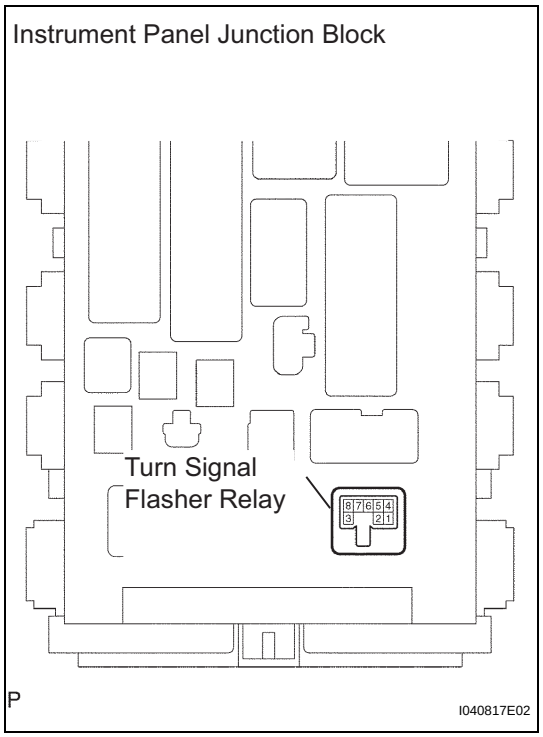

TURN SIGNAL FLASHER ASSEMBLY

ON-VEHICLE INSPECTION

1. CHECK TURN SIGNAL FLASHER OPERATION

(a) Power source circuit and ground circuit inspection.

(1) Remove the turn signal flasher relay from the junction block.

(2) Measure the voltage according to the value(s) in the table below.

Standard voltage

Tester Connection	Condition	Specified Condition
1 - Body ground	Power switch ON	10 to 14 V
4 - Body ground	Always	10 to 14 V

If the result is not as specified, there may be a malfunction on the wire harness side.

(3) Measure the resistance according to the value(s) in the table below.

Standard resistance

Tester Connection	Specified Condition
7 - Body ground	Below 1 Ω

If the result is not as specified, there may be a malfunction on the wire harness side.

(b) Output operation signal inspection.

(1) Install the turn signal flasher relay to the driver side panel junction block.

(2) Measure the voltage according to the value(s) in the table below.

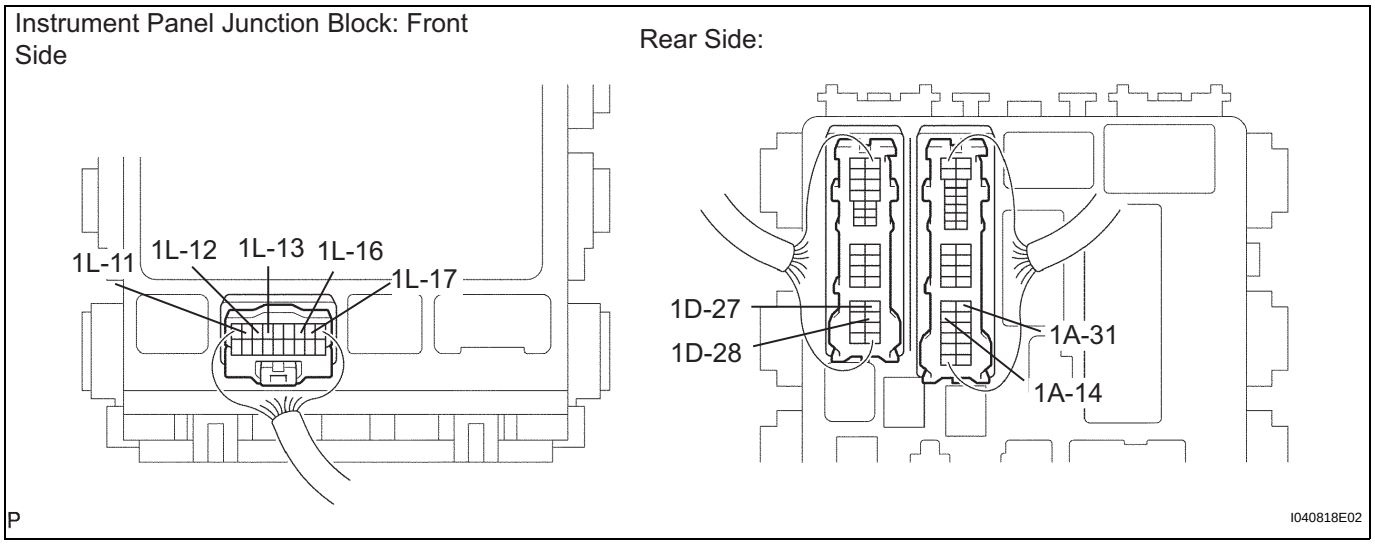

Standard voltage

Tester Connection	Condition	Specified Condition
1A-14 - Body ground	Hazard warning switch OFF	Below 1 V
	Hazard warning switch ON	Alternating between Below 1 V to 9 V (60 to 120 times per minute)

LI

Tester Connection	Condition	Specified Condition
1A-14 - Body ground	Turn signal switch (left turn) OFF	Below 1 V
	Turn signal switch (left turn) ON	Alternating between Below 1 V to 9 V (60 to 120 times per minute)
1A-31 - Body ground	Hazard warning switch OFF	Below 1 V
	Hazard warning switch ON	Alternating between Below 1 V to 9 V (60 to 120 times per minute)
1A-31 - Body ground	Turn signal switch (right turn) OFF	Below 1 V
	Turn signal switch (right turn) ON	Alternating between Below 1 V to 9 V (60 to 120 times per minute)
1D-27 - Body ground	Hazard warning signal OFF	Below 1 V
	Hazard warning signal ON	Alternating between Below 1 V to 9 V (60 to 120 times per minute)
1D-27 - Body ground	Turn signal switch (left turn) OFF	Below 1 V
	Turn signal switch (left turn) ON	Alternating between Below 1 V to 9 V (60 to 120 times per minute)
1D-28 - Body ground	Hazard warning signal OFF	Below 1 V
	Hazard warning signal ON	Alternating between Below 1 V to 9 V (60 to 120 times per minute)
1D-28 - Body ground	Turn signal switch (right turn) OFF	Below 1 V
	Turn signal switch (right turn) ON	Alternating between Below 1 V to 9 V (60 to 120 times per minute)
1L-11 - Body ground	Turn signal switch (left turn) OFF	Below 1 V
	Turn signal switch (left turn) ON	Above 9 V
1L-12 - Body ground	Turn signal switch (right turn) OFF	Below 1 V
	Turn signal switch (right turn) ON	Above 9 V
1L-13 - Body ground	Hazard warning switch OFF	Below 1 V
	Hazard warning switch ON	Alternating between Below 1 V to 9 V (60 to 120 times per minute)
1L-13 - Body ground	Turn signal switch (left turn) OFF	Below 1 V
	Turn signal switch (left turn) ON	Alternating between Below 1 V to 9 V (60 to 120 times per minute)
1L-16 - Body ground	Hazard warning switch OFF	Below 1 V
	Hazard warning switch ON	Alternating between Below 1 V to 9 V (60 to 120 times per minute)
1L-16 - Body ground	Turn signal switch (right turn) OFF	Below 1 V
	Turn signal switch (right turn) ON	Alternating between Below 1 V to 9 V (60 to 120 times per minute)
1L-17 - Body ground	Hazard warning switch OFF	Below 1 V
	Hazard warning switch ON	Above 9 V

If the result is not as specified, the relay may have a malfunction.

HEADLIGHT RELAY

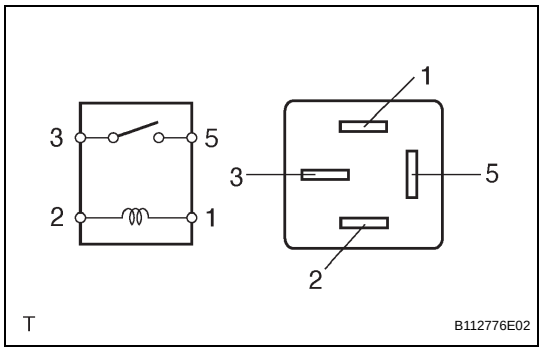

ON-VEHICLE INSPECTION

1. INSPECT HEADLIGHT RELAY (Marking: H-LP)

(a) Measure the resistance according to the value(s) in the table below.

Standard resistance

Tester Connection	Specified Condition
3 - 5	**10 kΩ or higher**
3 - 5	**Below 1 Ω (when battery voltage is applied to terminals 1 and 2)**

If the result is not as specified, replace the relay.

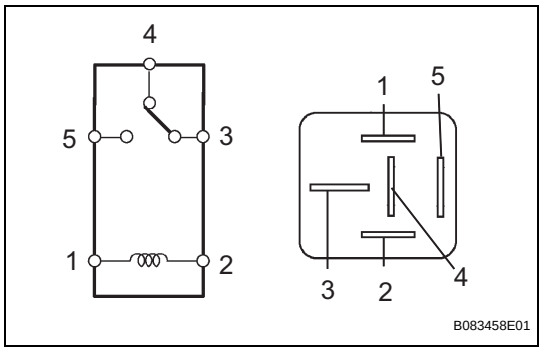

2. INSPECT NO. 2 HEADLIGHT RELAY (Marking: DIM)

(a) Measure the resistance according to the value(s) in the table below.

Standard resistance

Tester Connection	Specified Condition
3 - 5	**10 kΩ or higher**
3 - 4	**Below 1 Ω**
3 - 5	**Below 1 Ω (when battery voltage is applied to terminals 1 and 2)**
3 - 4	**Below 1 Ω (when battery voltage is applied to terminals 1 and 2)**

If the result is not as specified, replace the relay.

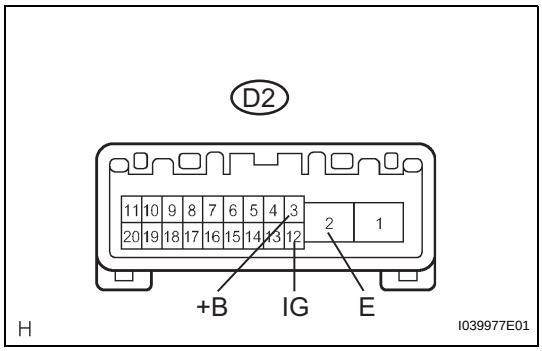

DAYTIME RUNNING LIGHT RELAY

ON-VEHICLE INSPECTION

1. CHECK DAYTIME RUNNING LIGHT RELAY

(a) Measure the voltage according to the value(s) in the table below.

Standard voltage

Tester Connection	Condition	Specified Condition
D2-2 (E) - D2-3 (+B)	Always	10 to 14 V
D2-2 (E) - D2-12 (G)	Engine is running and parking brake is released	

If the result is not as specified, replace the relay.

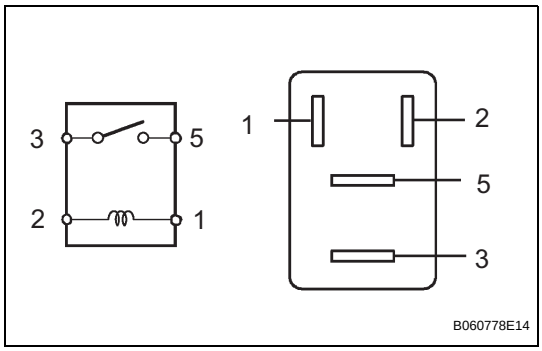

2. CHECK DAYTIME RUNNING LIGHT RELAY (Marking: DRL NO. 4)

(a) Measure the resistance according to the value(s) in the table below.

Standard resistance

Tester Connection	Specified Condition
3 - 5	10 kΩ or higher
3 - 5	Below 1Ω (when battery voltage is applied to terminal 1 and 2)

If the result is not as specified, replace the relay.

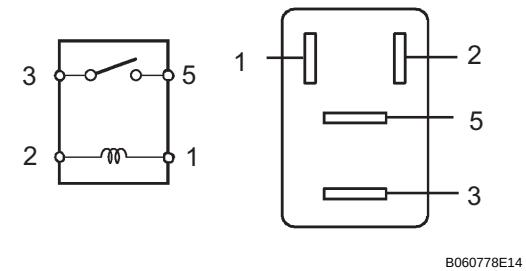

FOG LIGHT RELAY

ON-VEHICLE INSPECTION

1. INSPECT FOG LIGHT RELAY (Marking: FR-FOG)

(a) Measure the resistance according to the value(s) in the table below.

Standard resistance

Tester Connection	Specified Condition
3 - 5	10 kΩ or higher
3 - 5	Below 1 Ω (when battery voltage is applied to terminals 1 and 2)

If the result is not as specified, replace the relay.