2007 Pontiac Vibe Owner Manual

Seats and Restraint Systems 7
- Front Seats 8
- Rear Seats 16
- Safety Belts 18
- Child Restraints 37
- Airbag System 63
- Restraint System Check 82

Features and Controls 85
- Keys 87
- Doors and Locks 92
- Windows 98
- Theft-Deterrent Systems 100
- Starting and Operating Your Vehicle 102
- Mirrors 121
- OnStar® System 123
- Storage Areas 127
- Sunroof 131

Instrument Panel 133
- Instrument Panel Overview 136
- Climate Controls 152
- Warning Lights, Gages, and Indicators 158
- Audio System(s) 177

Driving Your Vehicle 221
- Your Driving, the Road, and Your Vehicle 222
- Towing 259

Service and Appearance Care 269
- Service 272
- Fuel 274
- Checking Things Under the Hood 280
- Bulb Replacement 315
- Windshield Wiper Blade Replacement ... 321

Downloaded from www.Manualslib.com manuals search engine

Tires 322
Appearance Care 354
Vehicle Identification 363
Electrical System 364
Capacities and Specifications 369
Normal Maintenance
Replacement Parts 370

Maintenance Schedule 373
Maintenance Schedule 374

Customer Assistance Information 399
Customer Assistance and Information ... 400
Reporting Safety Defects 416

Index 419

Downloaded from www.Manualslib.com manuals search engine

GENERAL MOTORS, GM, the GM Emblem, PONTIAC, the PONTIAC Emblem and the name VIBE are registered trademarks of General Motors Corporation.

This manual includes the latest information at the time it was printed. We reserve the right to make changes after that time without further notice. For vehicles first sold in Canada, substitute the name “General Motors of Canada Limited” for Pontiac Division whenever it appears in this manual.

This manual describes features that may be available in this model, but your vehicle may not have all of them. For example, more than one entertainment system may be offered or your vehicle may have been ordered without a front passenger or rear seats.

Keep this manual in the vehicle, so it will be there if it is needed when on the road. If the vehicle is sold, leave this manual in it so the new owner can use it.

Canadian Owners

A French language copy of this manual can be obtained from your dealer or from:

Helm, Incorporated
P.O. Box 07130
Detroit, MI 48207

Litho in U.S.A.
Part No. 15863402 A First Printing

©2006 General Motors Corporation. All Rights Reserved.

Downloaded from www.Manualslib.com manuals search engine

How to Use This Manual

Many people read the owner manual from beginning to end when they first receive their new vehicle. If this is done, it can help you learn about the features and controls for the vehicle. Pictures and words work together in the owner manual to explain things.

Index

A good place to quickly locate information about the vehicle is the Index in the back of the manual. It is an alphabetical list of what is in the manual and the page number where it can be found.

Safety Warnings and Symbols

There are a number of safety cautions in this book. We use a box and the word CAUTION to tell about things that could hurt you if you were to ignore the warning.

⚠ CAUTION:

These mean there is something that could hurt you or other people.

In the caution area, we tell you what the hazard is. Then we tell you what to do to help avoid or reduce the hazard. Please read these cautions. If you do not, you or others could be hurt.

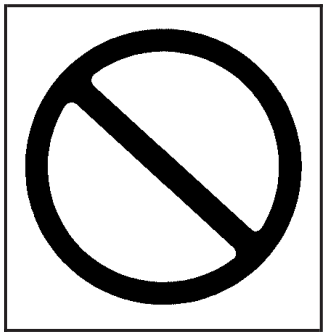

You will also find a circle with a slash through it in this book. This safety symbol means “Do Not,” “Do Not do this” or “Do Not let this happen.”

Downloaded from www.Manualslib.com manuals search engine

Vehicle Damage Warnings

Also, in this manual you will find these notices:

Notice: **These mean there is something that could damage your vehicle.**

A notice tells about something that can damage the vehicle. Many times, this damage would not be covered by your vehicle's warranty, and it could be costly. But the notice will tell what to do to help avoid the damage.

When you read other manuals, you might see CAUTION and NOTICE warnings in different colors or in different words.

There are also warning labels on the vehicle. They use the same words, CAUTION or NOTICE.

Vehicle Symbols

The vehicle has components and labels that use symbols instead of text. Symbols are shown along with the text describing the operation or information relating to a specific component, control, message, gage, or indicator.

If you need help figuring out a specific name of a component, gage, or indicator, reference the following topics:

- Seats and Restraint Systems in Section 1
- Features and Controls in Section 2
- Instrument Panel Overview in Section 3
- Climate Controls in Section 3
- Warning Lights, Gages, and Indicators in Section 3
- Audio System(s) in Section 3
- Engine Compartment Overview in Section 5

Downloaded from www.Manualslib.com manuals search engine

These are some examples of symbols that may be found on the vehicle:

CAUTION POSSIBLE INJURY	LATCH BOTH LAP AND SHOULDER BELTS TO PROTECT OCCUPANT DO NOT TWIST SAFETY BELT WHEN ATTACHING		MASTER LIGHTING SWITCH	ENGINE COOLANT TEMP	TIRE PRESSURE
PROTECT EYES BY SHIELDING	FASTEN SEAT BELTS	AIRBAG	TURN SIGNALS	BATTERY CHARGING SYSTEM	FUSE BOX ACCESS
CAUSTIC BATTERY ACID COULD CAUSE BURNS	MOVE SEAT FULLY REARWARD SECURE CHILD SEAT	DO NOT INSTALL A REAR-FACING CHILD RESTRAINT IN THIS SEATING POSITION	PARKING LAMPS	BRAKE	ENGINE COOLANT FAN
AVOID SPARKS OR FLAMES	PULL BELT OUT COMPLETELY THEN SECURE CHILD SEAT	DO NOT INSTALL A FORWARD-FACING CHILD RESTRAINT IN THIS SEATING POSITION	HAZARD WARNING FLASHER	COOLANT	FUEL
SPARK OR FLAME COULD EXPLODE BATTERY	POWER WINDOW	DOOR LOCK UNLOCK	DAYTIME RUNNING LAMPS	ENGINE OIL PRESSURE	OWNER MANUAL
			FOG LAMPS	ANTI-LOCK BRAKE SYSTEM	SERVICE MANUAL

Downloaded from www.Manualslib.com manuals search engine

Section 1 Seats and Restraint Systems

Front Seats 8
Manual Seats 8
Driver Seat Height Adjuster 9
Reclining Seatbacks 10
Head Restraints 13
Passenger Folding Seatback 14
Rear Seats 16
Rear Seat Operation 16
Safety Belts 18
Safety Belts: They Are for Everyone 18
Questions and Answers About Safety Belts 22
How to Wear Safety Belts Properly 23
Driver Position 24
Shoulder Belt Height Adjustment 31
Safety Belt Use During Pregnancy 32
Right Front Passenger Position 32
Rear Seat Passengers 33
Safety Belt Pretensioners 36
Safety Belt Extender 36
Child Restraints 37
Older Children 37
Infants and Young Children 40
Child Restraint Systems 43
Where to Put the Restraint 47
Lower Anchors and Tethers for Children (LATCH) 49
Securing a Child Restraint in a Rear Seat Position 56
Securing a Child Restraint in the Right Front Seat Position 58
Airbag System 63
Where Are the Airbags? 66
When Should an Airbag Inflate? 70
What Makes an Airbag Inflate? 71
How Does an Airbag Restrain? 72
What Will You See After an Airbag Inflates? 72
Passenger Sensing System 74
Servicing Your Airbag-Equipped Vehicle 80
Adding Equipment to Your Airbag-Equipped Vehicle 81
Restraint System Check 82
Checking the Restraint Systems 82
Replacing Restraint System Parts After a Crash 83

Downloaded from www.Manualslib.com manuals search engine

Front Seats

Manual Seats

⚠ CAUTION:

You can lose control of the vehicle if you try to adjust a manual driver's seat while the vehicle is moving. The sudden movement could startle and confuse you, or make you push a pedal when you do not want to. Adjust the driver's seat only when the vehicle is not moving.

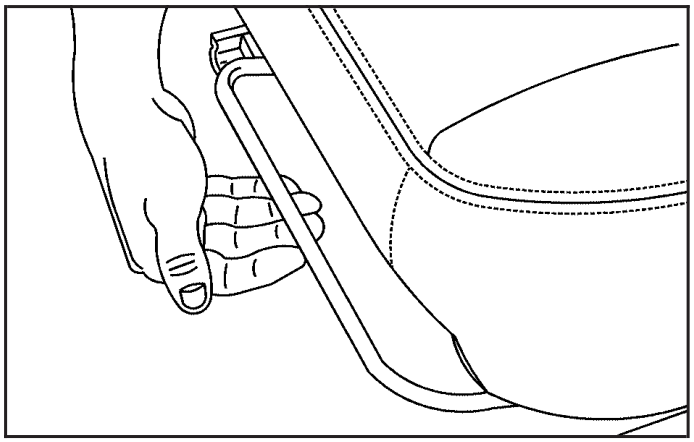

Lift the bar located under the front of the seat to unlock it. Slide the seat to where you want it and release the bar. Try to move the seat with your body to be sure the seat is locked in place.

Downloaded from www.Manualslib.com manuals search engine

Driver Seat Height Adjuster

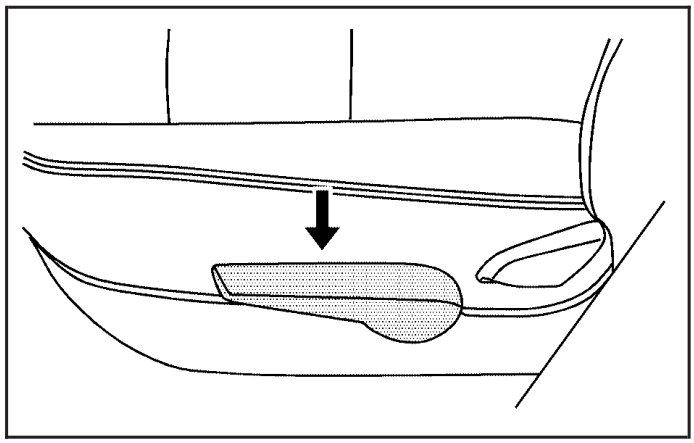

The driver seat height adjuster is located on the outboard side of the seat. To raise the seat, pull up on the lever repeatedly until the seat is at the desired height. To lower the seat, push down on the lever repeatedly until the seat is at the desired height.

It is easier to use the adjuster when the seat is unoccupied.

Downloaded from www.Manualslib.com manuals search engine

Reclining Seatbacks

⚠ CAUTION:

You can lose control of the vehicle if you try to adjust a manual driver's seat while the vehicle is moving. The sudden movement could startle and confuse you, or make you push a pedal when you do not want to. Adjust the driver's seat only when the vehicle is not moving.

⚠ CAUTION:

If the seatback is not locked, it could move forward in a sudden stop or crash. That could cause injury to the person sitting there. Always push and pull on the seatback to be sure it is locked.

The seats have manual reclining seatbacks. The lever used to operate them is located on the outboard side of the seats.

Downloaded from www.Manualslib.com manuals search engine

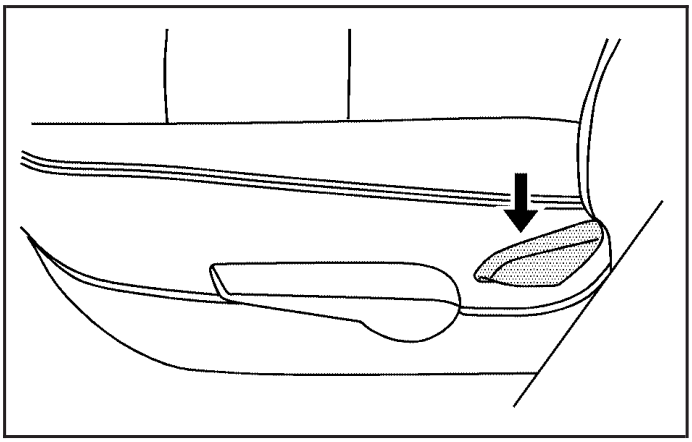

To recline the seatback, do the following:

1. Lift the recline lever.
2. Move the seatback to the desired position, then release the lever to lock the seatback in place.
3. Push and pull on the seatback to make sure it is locked.

To return the seatback to an upright position, do the following:

1. Lift the lever fully without applying pressure to the seatback and the seatback will return to the upright position.
2. Push and pull on the seatback to make sure it is locked.

Downloaded from www.Manualslib.com manuals search engine

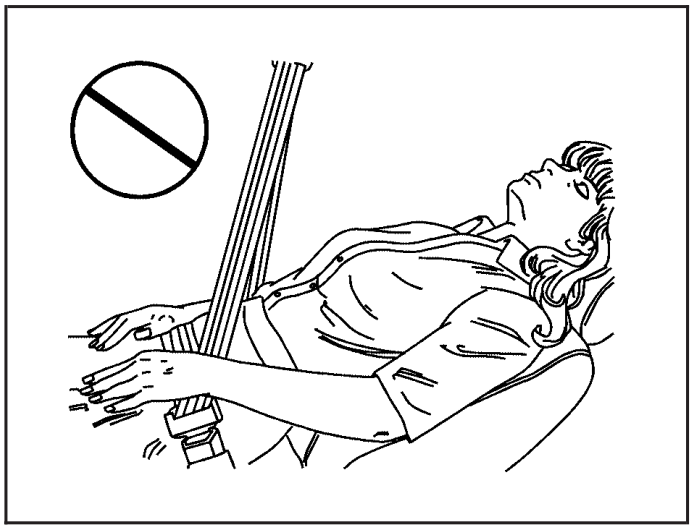

⚠ CAUTION:

Sitting in a reclined position when your vehicle is in motion can be dangerous. Even if you buckle up, your safety belts cannot do their job when you are reclined like this.

The shoulder belt cannot do its job because it will not be against your body. Instead, it will be in front of you. In a crash, you could go into it, receiving neck or other injuries.

The lap belt cannot do its job either. In a crash, the belt could go up over your abdomen. The belt forces would be there, not at your pelvic bones. This could cause serious internal injuries.

For proper protection when the vehicle is in motion, have the seatback upright. Then sit well back in the seat and wear your safety belt properly.

Do not have a seatback reclined if your vehicle is moving.

Downloaded from www.Manualslib.com manuals search engine

Head Restraints

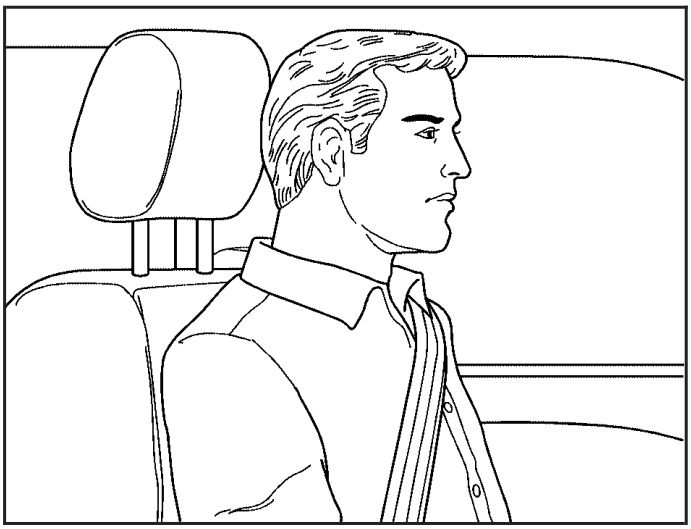

Adjust the head restraint so that the top of the restraint is at the same height as the occupant's head. This position reduces the chance of a neck injury in a crash.

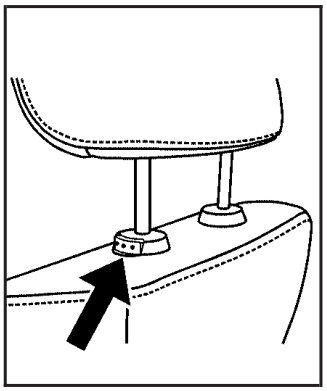

Pull the head restraint up to raise it. To lower the head restraint, press the button, located on the top of the seatback, and push the head restraint down.

The rear seats may have head restraints that can be adjusted in height like the front head restraints.

Downloaded from www.Manualslib.com manuals search engine

Passenger Folding Seatback

⚠ CAUTION:

If you fold the seatback forward to carry longer objects, such as skis, be sure any such cargo is not near an airbag. In a crash, an inflating airbag might force that object toward a person. This could cause severe injury or even death. Secure objects away from the area in which an airbag would inflate. For more information, see *Where Are the Airbags? on page 66* and *Loading Your Vehicle on page 253*.

⚠ CAUTION:

Things you put on this seatback can strike and injure people in a sudden stop or turn, or in a crash. Remove or secure all items before driving.

You can fold the front passenger's seatback down to allow for more cargo space or as a temporary table while the vehicle is stopped. When the area is not being used for more cargo space, the seatback should be placed in the locked, upright position.

To fold the seatback down, do the following:

1. Lower the head restraint to the lowest position and make sure the seatback is at the most upright position and locked.

Downloaded from www.Manualslib.com manuals search engine

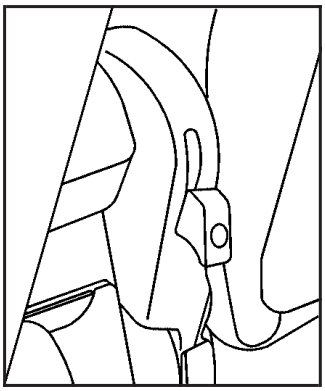

2. Pull up on one of the levers located on either side of the back of the passenger's seatback.

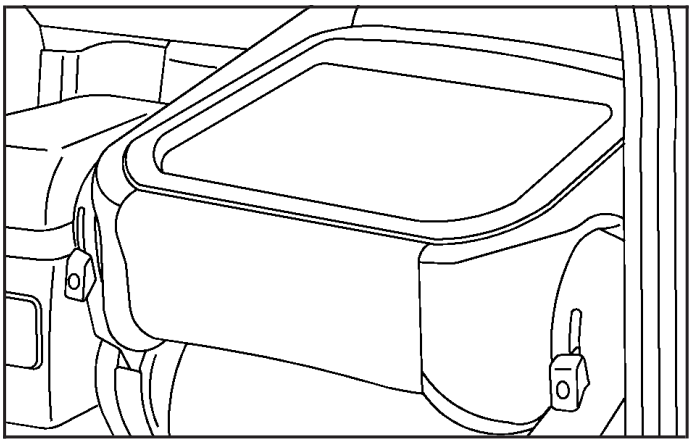

3. Fold the seatback down.

To raise the seatback, do the following:

1. Pull up on one of the levers located on either side of the back of the passenger's seatback.
2. Pull the seatback up and push it back to lock it into place. Make sure the safety belt is not twisted or caught in the seatback.
3. Push and pull the top of the seatback to be sure it is locked into position.
4. Use the reclining front seatback lever to adjust the seatback to a comfortable position.

Downloaded from www.Manualslib.com manuals search engine

Rear Seats

Rear Seat Operation

You can fold either side of the seatback down for more cargo space. The rear right side seatback can also be used as a temporary table while the vehicle is stopped. Make sure the front seatback is not reclined or in the rearward most position. If it is, the rear seatback will not fold down all the way.

⚠ CAUTION:

A rear seatback folded forward, or any other object contacting or pressing the front seatback may affect the proper functioning of the passenger sensing system. See *Passenger Sensing System on page 74*.

To fold either seatback down, do the following:

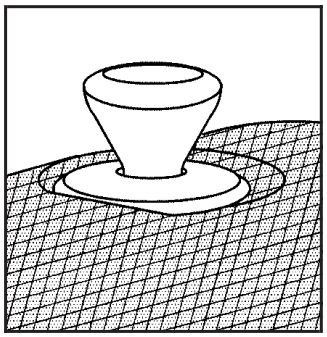

1. Pull up on the lock release knob, located on the top outboard side of the seatbacks.

Notice: **Folding a rear seat with the safety belts still fastened may cause damage to the seat or the safety belts. Always unbuckle the safety belts and return them to their normal stowed position before folding a rear seat.**

2. Fold the seatback down. Each seatback can be folded separately.

Downloaded from www.Manualslib.com manuals search engine

To raise the seatback, do the following:

⚠ CAUTION:

A safety belt that is improperly routed, not properly attached, or twisted will not provide the protection needed in a crash. The person wearing the belt could be seriously injured. After raising the rear seatback, always check to be sure that the safety belts are properly routed and attached, and are not twisted.

⚠ CAUTION:

If the seatback is not locked, it could move forward in a sudden stop or crash. That could cause injury to the person sitting there. Always push and pull on the seatback to be sure it is locked.

1. Pull the seatback up and push it back to lock it into place. Make sure the safety belts are not twisted or caught in the seatback.
2. Push and pull the top of the seatback to be sure it is locked into position.

Downloaded from www.Manualslib.com manuals search engine

Safety Belts

Safety Belts: They Are for Everyone

This part of the manual tells you how to use safety belts properly. It also tells you some things you should not do with safety belts.

⚠ CAUTION:

Do not let anyone ride where he or she cannot wear a safety belt properly. If you are in a crash and you are not wearing a safety belt, your injuries can be much worse. You can hit things inside the vehicle or be ejected from it. You can be seriously injured or killed. In the same crash, you might not be, if you are buckled up. Always fasten your safety belt, and check that your passengers' belts are fastened properly too.

⚠ CAUTION:

It is extremely dangerous to ride in a cargo area, inside or outside of a vehicle. In a collision, people riding in these areas are more likely to be seriously injured or killed. Do not allow people to ride in any area of your vehicle that is not equipped with seats and safety belts. Be sure everyone in your vehicle is in a seat and using a safety belt properly.

Your vehicle has a light that comes on as a reminder to buckle up. See *Safety Belt Reminder Light on page 161*.

Downloaded from www.Manualslib.com manuals search engine

In most states and in all Canadian provinces, the law says to wear safety belts. Here is why: *They work*.

You never know if you will be in a crash. If you do have a crash, you do not know if it will be a bad one.

A few crashes are mild, and some crashes can be so serious that even buckled up, a person would not survive. But most crashes are in between. In many of them, people who buckle up can survive and sometimes walk away. Without belts they could have been badly hurt or killed.

After more than 40 years of safety belts in vehicles, the facts are clear. In most crashes buckling up does matter... a lot!

Why Safety Belts Work

When you ride in or on anything, you go as fast as it goes.

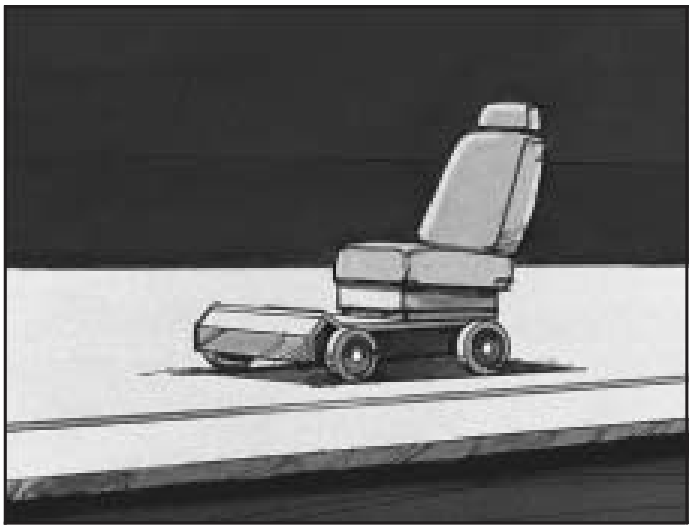

Take the simplest vehicle. Suppose it is just a seat on wheels.

Downloaded from www.Manualslib.com manuals search engine

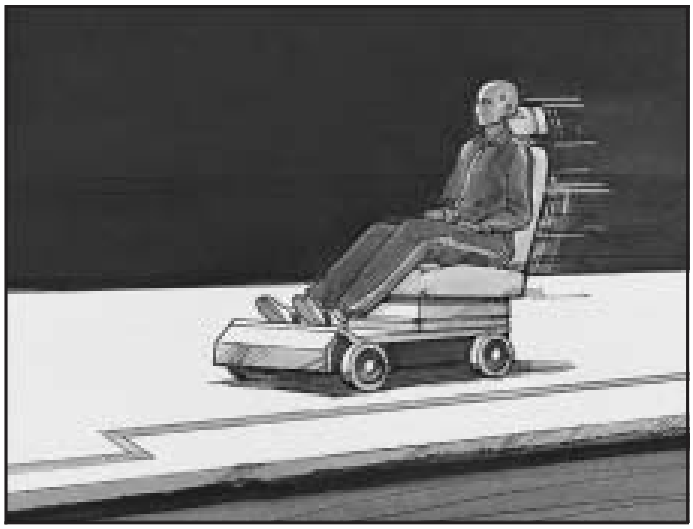

Put someone on it.

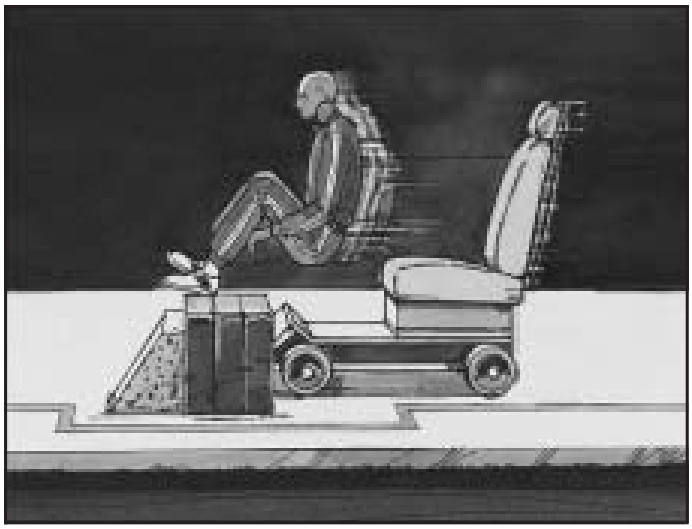

Get it up to speed. Then stop the vehicle. The rider does not stop.

Downloaded from www.Manualslib.com manuals search engine

The person keeps going until stopped by something. In a real vehicle, it could be the windshield...

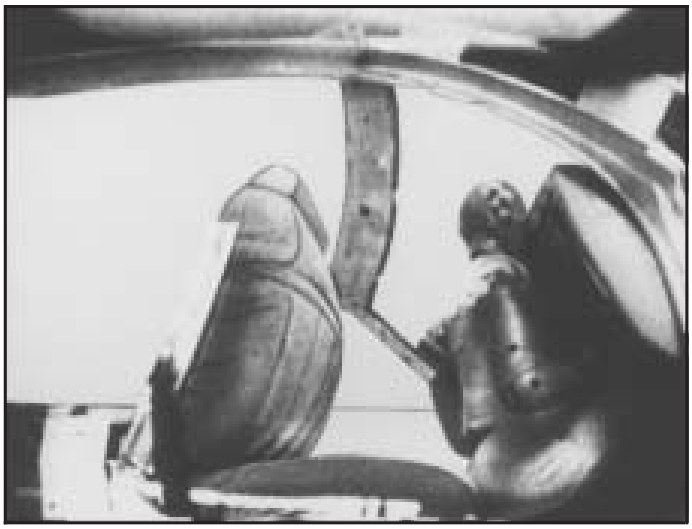

or the instrument panel...

Downloaded from www.Manualslib.com manuals search engine

or the safety belts!

With safety belts, you slow down as the vehicle does. You get more time to stop. You stop over more distance, and your strongest bones take the forces. That is why safety belts make such good sense.

Questions and Answers About Safety Belts

Q: Will I be trapped in the vehicle after an accident if I am wearing a safety belt?

A: You *could* be — whether you are wearing a safety belt or not. But you can unbuckle a safety belt, even if you are upside down. And your chance of being conscious during and after an accident, so you *can* unbuckle and get out, is *much* greater if you are belted.

Q: If my vehicle has airbags, why should I have to wear safety belts?

A: Airbags are supplemental systems only; so they work *with* safety belts — not instead of them. Every airbag system ever offered for sale has required the use of safety belts. Even if you are in a vehicle that has airbags, you still have to buckle up to get the most protection. That is true not only in frontal collisions, but especially in side and other collisions.

Downloaded from www.Manualslib.com manuals search engine

Q: If I am a good driver, and I never drive far from home, why should I wear safety belts?

A: You may be an excellent driver, but if you are in an accident — even one that is not your fault — you and your passengers can be hurt. Being a good driver does not protect you from things beyond your control, such as bad drivers.

Most accidents occur within 25 miles (40 km) of home. And the greatest number of serious injuries and deaths occur at speeds of less than 40 mph (65 km/h).

Safety belts are for everyone.

How to Wear Safety Belts Properly

This part is only for people of adult size.

Be aware that there are special things to know about safety belts and children. And there are different rules for smaller children and babies. If a child will be riding in your vehicle, see *Older Children on page 37* or *Infants and Young Children on page 40*. Follow those rules for everyone's protection.

First, you will want to know which restraint systems your vehicle has.

We will start with the driver position.

Downloaded from www.Manualslib.com manuals search engine

Driver Position

Lap-Shoulder Belt

The driver has a lap-shoulder belt. Here is how to wear it properly.

1. Close and lock the door.
2. Adjust the seat so you can sit up straight. To see how, see “Seats” in the Index.

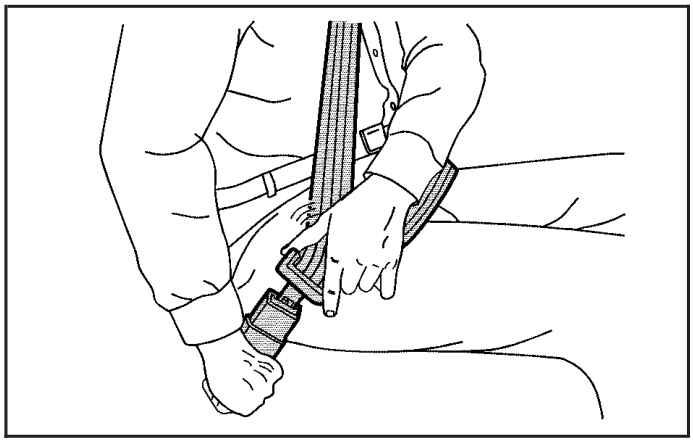

3. Pick up the latch plate and pull the belt across you. Do not let it get twisted.

   The lap-shoulder belt may lock if you pull the belt across you very quickly. If this happens, let the belt go back slightly to unlock it. Then pull the belt across you more slowly.

4. Push the latch plate into the buckle until it clicks.

   Pull up on the latch plate to make sure it is secure. If the belt is not long enough, see *Safety Belt Extender on page 36*.

   Make sure the release button on the buckle is positioned so you would be able to unbuckle the safety belt quickly if you ever had to.

5. Move the shoulder belt height adjuster to the height that is right for you. Improper shoulder belt height adjustment could reduce the effectiveness of the safety belt in a crash. See *Shoulder Belt Height Adjustment on page 31*.

Downloaded from www.Manualslib.com manuals search engine

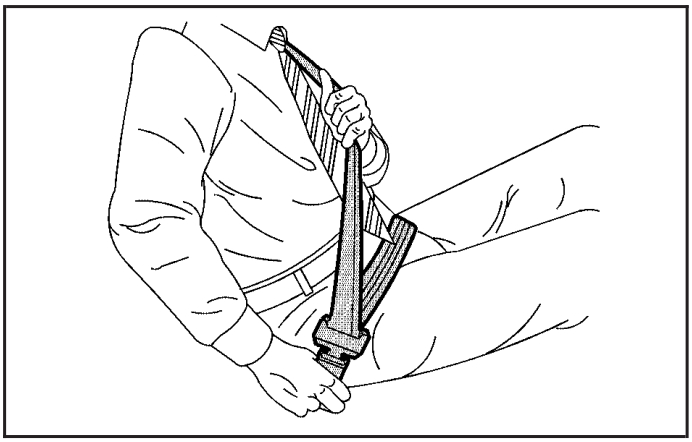

6. To make the lap part tight, pull up on the shoulder belt. It may be necessary to pull stitching on the safety belt through the latch plate to fully tighten the lap belt on smaller occupants.

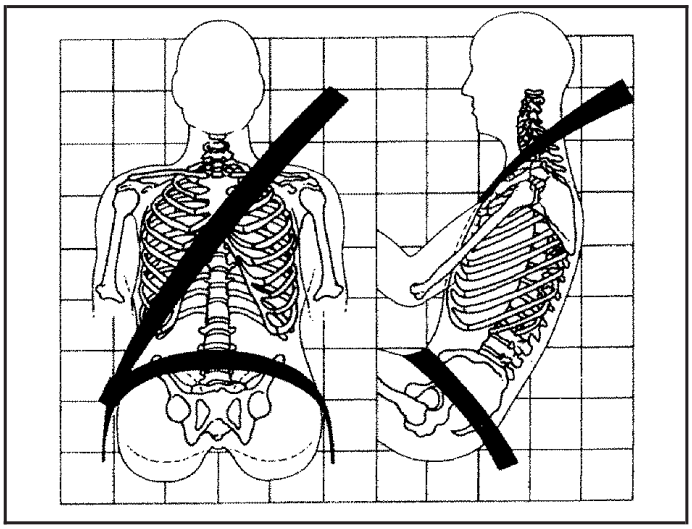

The lap part of the belt should be worn low and snug on the hips, just touching the thighs. In a crash, this applies force to the strong pelvic bones. And you would be less likely to slide under the lap belt. If you slid under it, the belt would apply force at your abdomen. This could cause serious or even fatal injuries. The shoulder belt should go over the shoulder and across the chest. These parts of the body are best able to take belt restraining forces.

The safety belt locks if there is a sudden stop or crash.

Downloaded from www.Manualslib.com manuals search engine

Q: What is wrong with this?

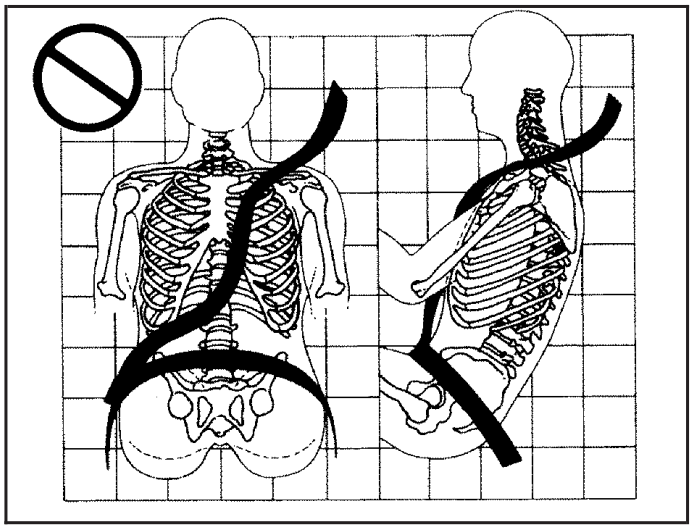

A: The shoulder belt is too loose. It will not give nearly as much protection this way.

⚠ CAUTION:

You can be seriously hurt if your shoulder belt is too loose. In a crash, you would move forward too much, which could increase injury. The shoulder belt should fit against your body.

Downloaded from www.Manualslib.com manuals search engine

Q: What is wrong with this?

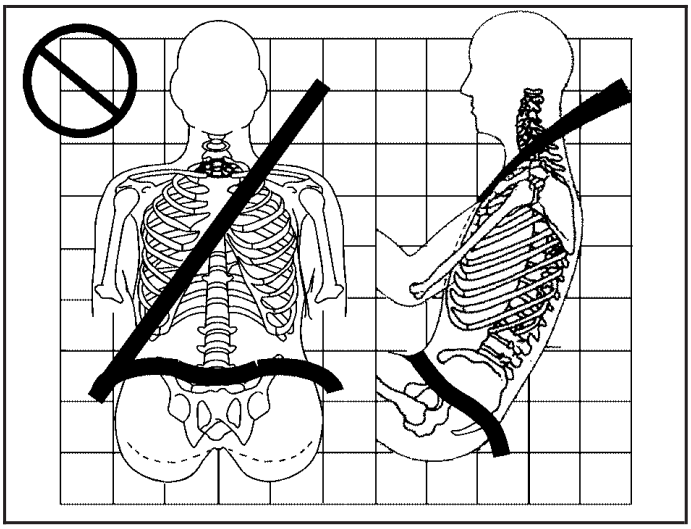

A: The lap belt is too loose. It will not give nearly as much protection this way.

⚠ CAUTION:

You can be seriously hurt if your lap belt is too loose. In a crash, you could slide under the lap belt and apply force at your abdomen. This could cause serious or even fatal injuries. The lap belt should be worn low and snug on the hips, just touching the thighs.

Downloaded from www.Manualslib.com manuals search engine

Q: What is wrong with this?

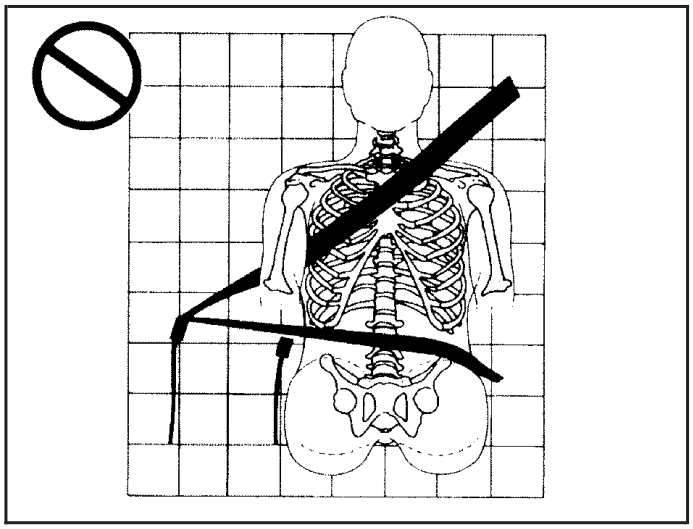

A: The belt is buckled in the wrong place.

⚠ CAUTION:

You can be seriously injured if your belt is buckled in the wrong place like this. In a crash, the belt would go up over your abdomen. The belt forces would be there, not at the pelvic bones. This could cause serious internal injuries. Always buckle your belt into the buckle nearest you.

Downloaded from www.Manualslib.com manuals search engine

Q: What is wrong with this?

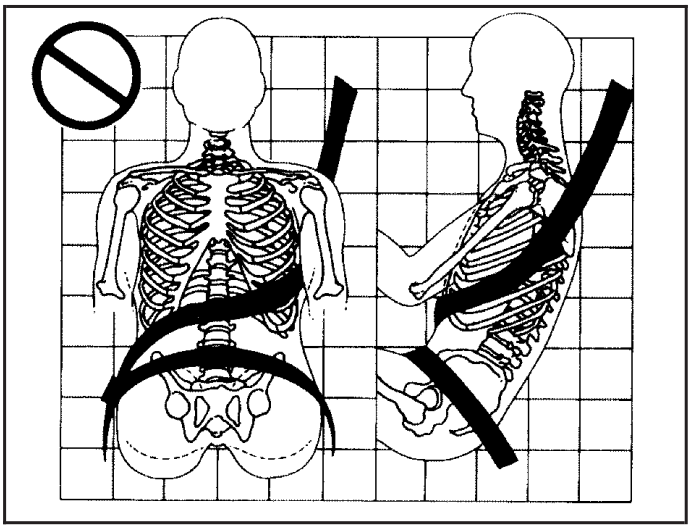

A: The shoulder belt is worn under the arm. It should be worn over the shoulder at all times.

⚠ CAUTION:

You can be seriously injured if you wear the shoulder belt under your arm. In a crash, your body would move too far forward, which would increase the chance of head and neck injury. Also, the belt would apply too much force to the ribs, which are not as strong as shoulder bones. You could also severely injure internal organs like your liver or spleen.

Downloaded from www.Manualslib.com manuals search engine

Q: What is wrong with this?

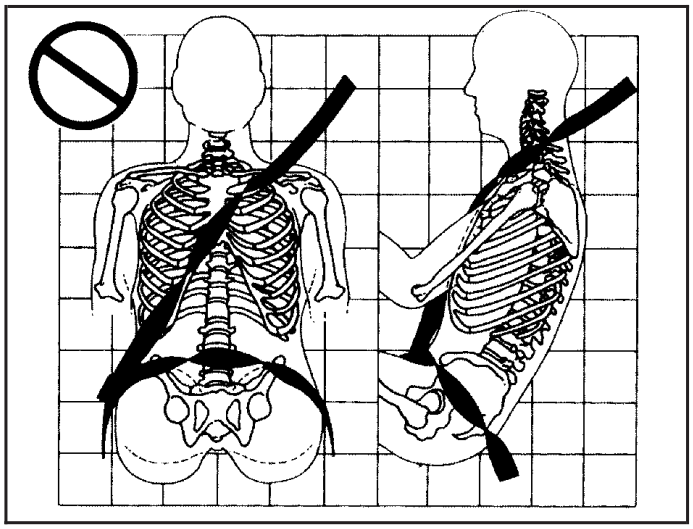

A: The belt is twisted across the body.

⚠ CAUTION:

You can be seriously injured by a twisted belt. In a crash, you would not have the full width of the belt to spread impact forces. If a belt is twisted, make it straight so it can work properly, or ask your dealer to fix it.

Downloaded from www.Manualslib.com manuals search engine

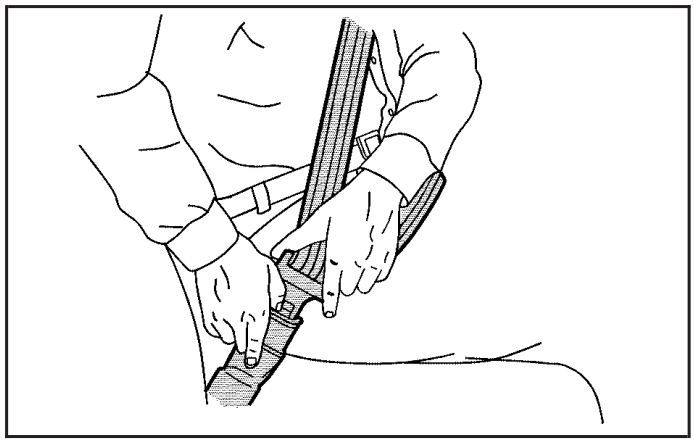

To unlatch the belt, push the button on the buckle. The belt should go back out of the way.

Before you close the door, be sure the belt is out of the way. If you slam the door on it, you can damage both the belt and your vehicle.

Shoulder Belt Height Adjustment

Before you begin to drive, move the shoulder belt height adjuster to the height that is right for you.

Adjust the height so that the shoulder portion of the belt is centered on your shoulder. The belt should be away from your face and neck, but not falling off your shoulder. Improper shoulder belt height adjustment could reduce the effectiveness of the safety belt in a crash.

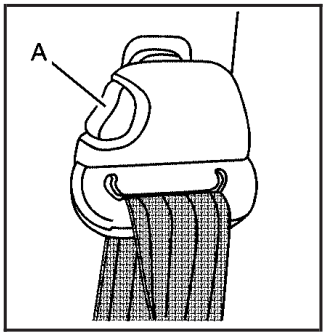

To move it down, squeeze the button (A) and move the height adjuster to the desired position. You can move the height adjuster up just by pushing up on the shoulder belt guide.

After you move the height adjuster to where you want it, try to move it down without squeezing the release button to make sure it has locked into position.

Downloaded from www.Manualslib.com manuals search engine

Safety Belt Use During Pregnancy

Safety belts work for everyone, including pregnant women. Like all occupants, they are more likely to be seriously injured if they do not wear safety belts.

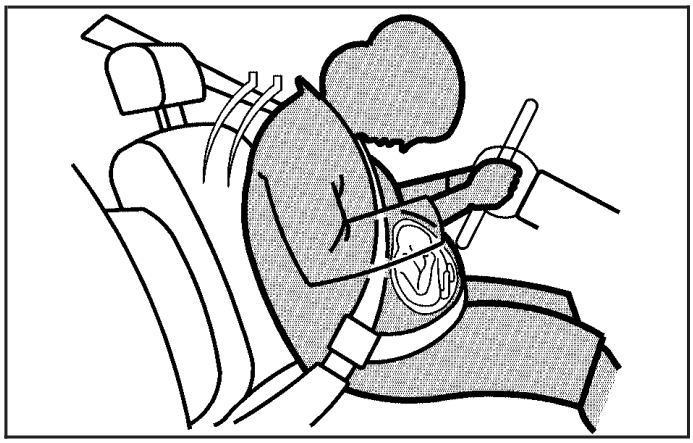

A pregnant woman should wear a lap-shoulder belt, and the lap portion should be worn as low as possible, below the rounding, throughout the pregnancy.

The best way to protect the fetus is to protect the mother. When a safety belt is worn properly, it is more likely that the fetus will not be hurt in a crash. For pregnant women, as for anyone, the key to making safety belts effective is wearing them properly.

Right Front Passenger Position

To learn how to wear the right front passenger's safety belt properly, see *Driver Position on page 24*.

The right front passenger's safety belt works the same way as the driver's safety belt — except for one thing. If you ever pull the shoulder portion of the belt out all the way, you will engage the child restraint locking feature. If this happens, let the belt go back all the way and start again.

Downloaded from www.Manualslib.com manuals search engine

Rear Seat Passengers

It is very important for rear seat passengers to buckle up! Accident statistics show that unbelted people in the rear seat are hurt more often in crashes than those who are wearing safety belts.

Rear passengers who are not safety belted can be thrown out of the vehicle in a crash. And they can strike others in the vehicle who are wearing safety belts.

Lap-Shoulder Belt

All rear seat positions have lap-shoulder belts. Here is how to wear one properly.

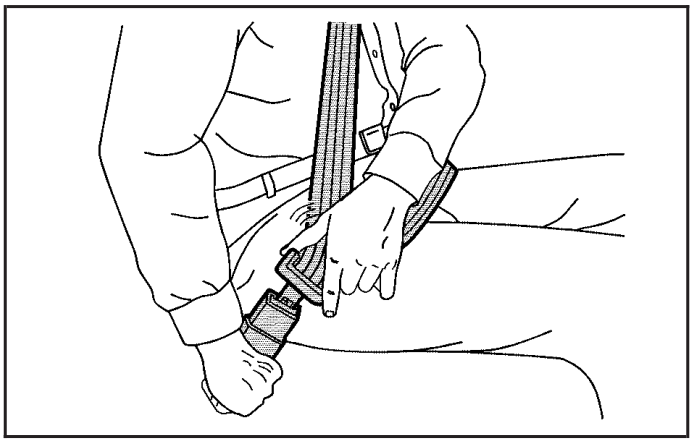

1. Pick up the latch plate and pull the belt across you. Do not let it get twisted.

   The shoulder belt may lock if you pull the belt across you very quickly. If this happens, let the belt go back slightly to unlock it. Then pull the belt across you more slowly.

Downloaded from www.Manualslib.com manuals search engine

2. Push the latch plate into the buckle until it clicks. Pull up on the latch plate to make sure it is secure. If the buckle does not click, check to be sure that you are using the correct buckle. The buckle for the center rear passenger position has the word CENTER on it.

   When the shoulder belt is pulled out all the way, it will lock. If it does, let it go back all the way and start again.

   If the belt is not long enough, see *Safety Belt Extender on page 36*.

   Make sure the release button on the buckle is positioned so you would be able to unbuckle the safety belt quickly if you ever had to.

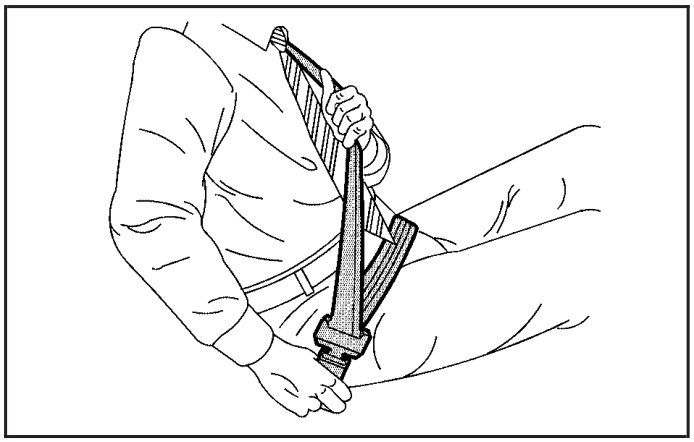

3. To make the lap part tight, pull up on the shoulder belt.

Downloaded from www.Manualslib.com manuals search engine

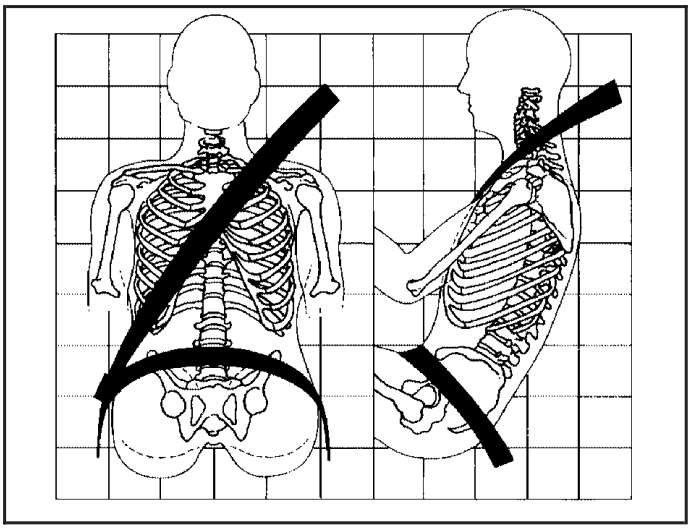

The lap part of the belt should be worn low and snug on the hips, just touching the thighs. In a crash, this applies force to the pelvic bones. And you would be less likely to slide under the lap belt. If you slid under it, the belt would apply force at your abdomen. This could cause serious or even fatal injuries. The shoulder belt should go over the shoulder and across the chest. These parts of the body are best able to take belt restraining forces.

The safety belt locks if there is a sudden stop or a crash.

⚠ CAUTION:

You can be seriously hurt if your shoulder belt is too loose. In a crash, you would move forward too much, which could increase injury. The shoulder belt should fit against your body.

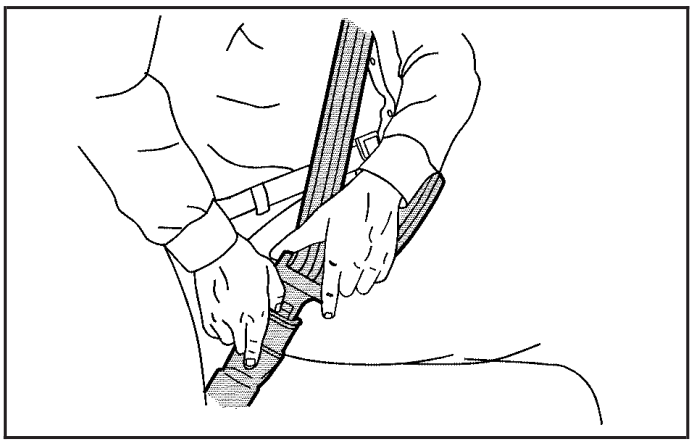

To unlatch the belt, push the button on the buckle.

Downloaded from www.Manualslib.com manuals search engine

Safety Belt Pretensioners

Your vehicle has safety belt pretensioners. Although you cannot see them, they are located on the retractor part of the safety belts for the driver and right front passenger. They help the safety belts reduce a person's forward movement in a moderate to severe frontal or near frontal crash.

If the passenger sensing system detects that there is not a passenger in the right front passenger position, the safety belt pretensioner for that position will not activate. See *Passenger Sensing System on page 74*.

Pretensioners work only once. If they activate in a crash, you will need to get new ones, and probably other new parts for your safety belt system. See *Replacing Restraint System Parts After a Crash on page 83*.

Safety Belt Extender

If the vehicle's safety belt will fasten around you, you should use it.

But if a safety belt is not long enough, your dealer will order you an extender. When you go in to order it, take the heaviest coat you will wear, so the extender will be long enough for you. To help avoid personal injury, do not let someone else use it, and use it only for the seat it is made to fit. The extender has been designed for adults. Never use it for securing child seats. To wear it, just attach it to the regular safety belt. For more information, see the instruction sheet that comes with the extender.

Always disconnect the extender from the safety belt after you use it so that the airbag will work properly the next time someone uses that seat.

When you use a safety belt extender in the right front passenger's seat, make sure the passenger airbag status indicator shows "ON." See *Passenger Airbag Status Indicator on page 163*. If the indicator shows "OFF," disconnect the extender's latch from the buckle then reconnect the safety belt. Make sure the indicator light shows "ON", then reconnect the safety belt extender. If you use the safety belt extender while the indicator light shows "OFF," the right front passenger's frontal and seat-mounted side impact airbags (if equipped) may not activate correctly. See *Airbag System on page 63* for important safety information about your airbags.

Downloaded from www.Manualslib.com manuals search engine

Child Restraints

Older Children

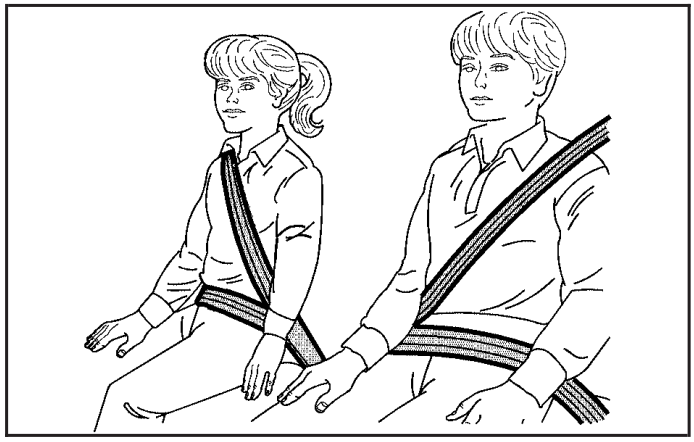

Older children who have outgrown booster seats should wear the vehicle's safety belts.

Q: What is the proper way to wear safety belts?

A: If possible, an older child should wear a lap-shoulder belt and get the additional restraint a shoulder belt can provide. The shoulder belt should not cross the face or neck. The lap belt should fit snugly below the hips, just touching the top of the thighs. It should never be worn over the abdomen, which could cause severe or even fatal internal injuries in a crash.

According to accident statistics, children are safer when properly restrained in the rear seating positions than in the front seating positions.

In a crash, children who are not buckled up can strike other people who are buckled up, or can be thrown out of the vehicle. Older children need to use safety belts properly.

Downloaded from www.Manualslib.com manuals search engine

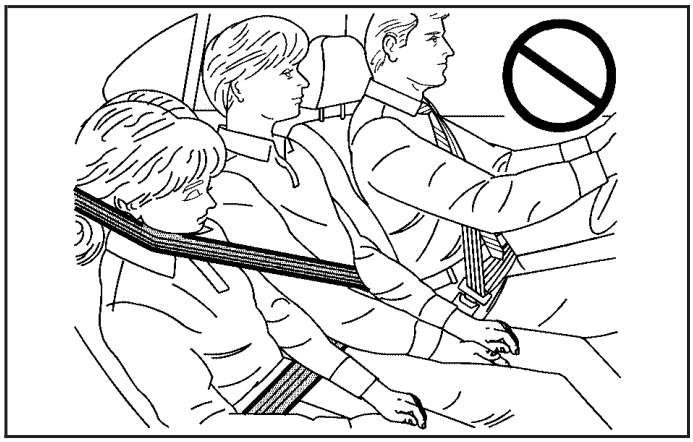

⚠ CAUTION:

Never do this.

Here two children are wearing the same belt. The belt cannot properly spread the impact forces. In a crash, the two children can be crushed together and seriously injured. A belt must be used by only one person at a time.

Q: What if a child is wearing a lap-shoulder belt, but the child is so small that the shoulder belt is very close to the child's face or neck?

A: If the child is sitting in a seat next to a window, move the child toward the center of the vehicle. If the child is sitting in the center rear seat passenger position, move the child toward the safety belt buckle. In either case, be sure that the shoulder belt still is on the child's shoulder, so that in a crash the child's upper body would have the restraint that belts provide.

Downloaded from www.Manualslib.com manuals search engine

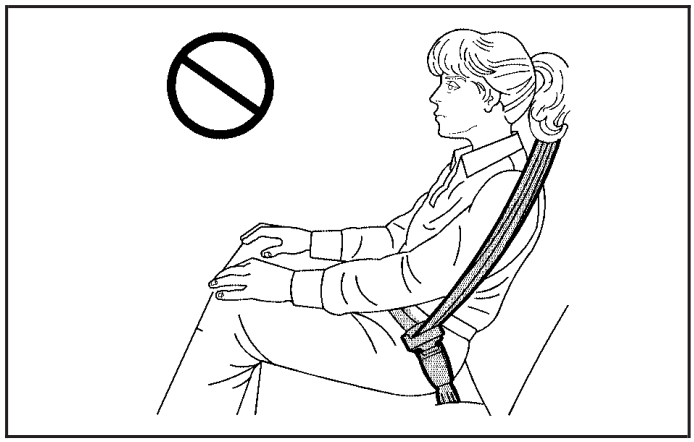

⚠ CAUTION:

Never do this.

Here a child is sitting in a seat that has a lap-shoulder belt, but the shoulder part is behind the child. If the child wears the belt in this way, in a crash the child might slide under the belt. The belt's force would then be applied right on the child's abdomen. That could cause serious or fatal injuries.

Wherever the child sits, the lap portion of the belt should be worn low and snug on the hips, just touching the child's thighs. This applies belt force to the child's pelvic bones in a crash.

Downloaded from www.Manualslib.com manuals search engine

Infants and Young Children

Everyone in a vehicle needs protection! This includes infants and all other children. Neither the distance traveled nor the age and size of the traveler changes the need, for everyone, to use safety restraints. In fact, the law in every state in the United States and in every Canadian province says children up to some age must be restrained while in a vehicle.

⚠ CAUTION:

Children can be seriously injured or strangled if a shoulder belt is wrapped around their neck and the safety belt continues to tighten. Never leave children unattended in a vehicle and never allow children to play with the safety belts.

Every time infants and young children ride in vehicles, they should have the protection provided by appropriate restraints. Young children should not use the vehicle's adult safety belts alone, unless there is no other choice. Instead, they need to use a child restraint.

⚠ CAUTION:

People should never hold a baby in their arms while riding in a vehicle. A baby does not weigh much — until a crash. During a crash a baby will become so heavy it is not possible to hold it. For example, in a crash at only 25 mph (40 km/h), a 12 lb (5.5 kg) baby will suddenly become a 240 lb (110 kg) force on a person's arms. A baby should be secured in an appropriate restraint.

Downloaded from www.Manualslib.com manuals search engine

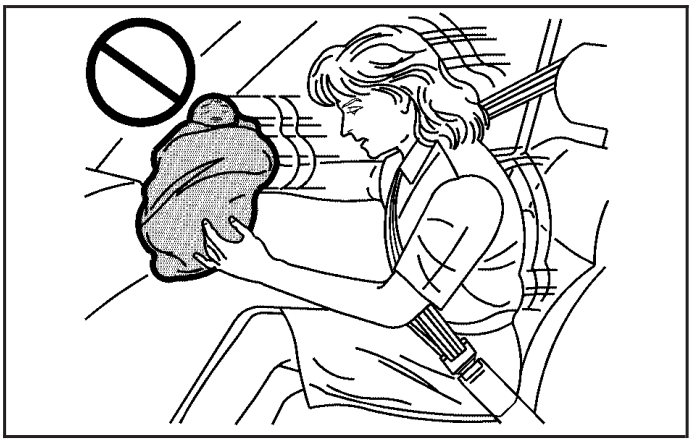

⚠ CAUTION:

Children who are up against, or very close to, any airbag when it inflates can be seriously injured or killed. Airbags plus lap-shoulder belts offer protection for adults and older children, but not for young children and infants.

CAUTION: (Continued)

CAUTION: (Continued)

Neither the vehicle's safety belt system nor its airbag system is designed for them. Young children and infants need the protection that a child restraint system can provide.

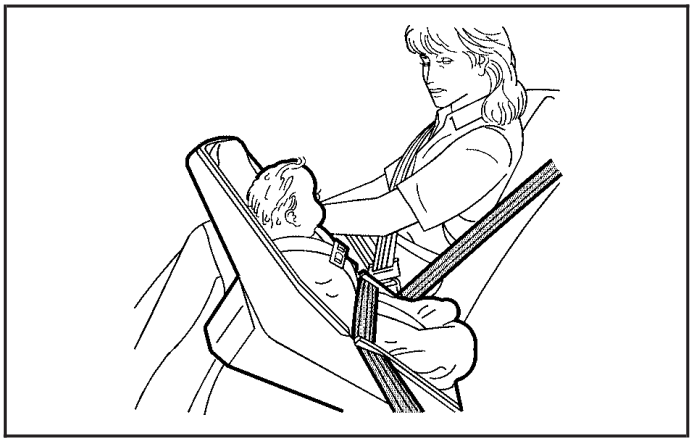

Downloaded from www.Manualslib.com manuals search engine

Q: What are the different types of add-on child restraints?

A: Add-on child restraints, which are purchased by the vehicle's owner, are available in four basic types. Selection of a particular restraint should take into consideration not only the child's weight, height, and age but also whether or not the restraint will be compatible with the motor vehicle in which it will be used.

For most basic types of child restraints, there are many different models available. When purchasing a child restraint, be sure it is designed to be used in a motor vehicle. If it is, the restraint will have a label saying that it meets federal motor vehicle safety standards.

The restraint manufacturer's instructions that come with the restraint state the weight and height limitations for a particular child restraint. In addition, there are many kinds of restraints available for children with special needs.

⚠ CAUTION:

Newborn infants need complete support, including support for the head and neck. This is necessary because a newborn infant's neck is weak and its head weighs so much compared with the rest of its body. In a crash, an infant in a rear-facing seat settles into the restraint, so the crash forces can be distributed across the strongest part of an infant's body, the back and shoulders. Infants always should be secured in appropriate infant restraints.

Downloaded from www.Manualslib.com manuals search engine

⚠ CAUTION:

The body structure of a young child is quite unlike that of an adult or older child, for whom the safety belts are designed. A young child's hip bones are still so small that the vehicle's regular safety belt may not remain low on the hip bones, as it should. Instead, it may settle up around the child's abdomen. In a crash, the belt would apply force on a body area that is unprotected by any bony structure. This alone could cause serious or fatal injuries. Young children always should be secured in appropriate child restraints.

Child Restraint Systems

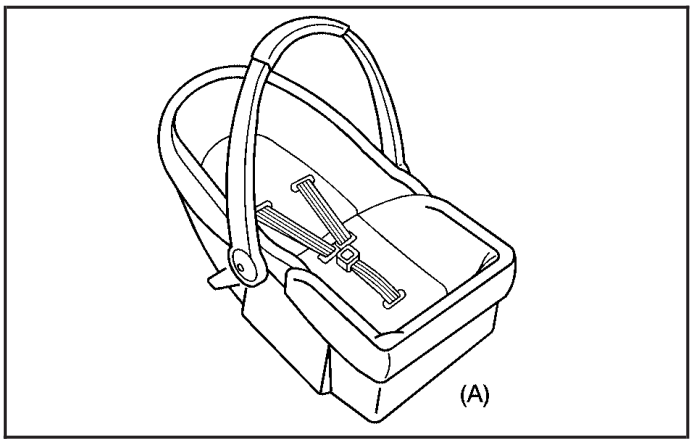

An infant car bed (A), a special bed made for use in a motor vehicle, is an infant restraint system designed to restrain or position a child on a continuous flat surface. Make sure that the infant's head rests toward the center of the vehicle.

Downloaded from www.Manualslib.com manuals search engine

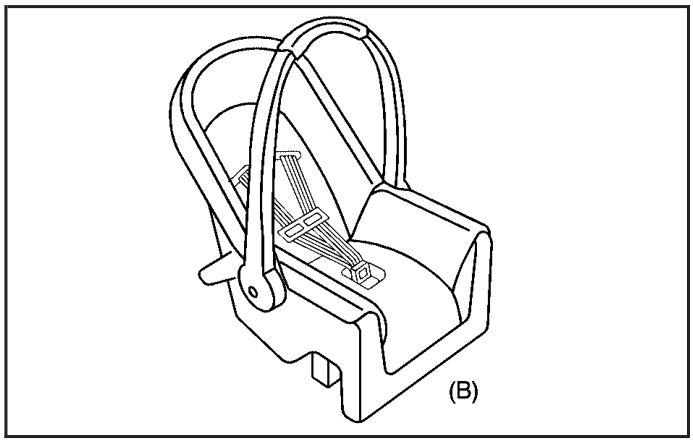

A rear-facing infant seat (B) provides restraint with the seating surface against the back of the infant. The harness system holds the infant in place and, in a crash, acts to keep the infant positioned in the restraint.

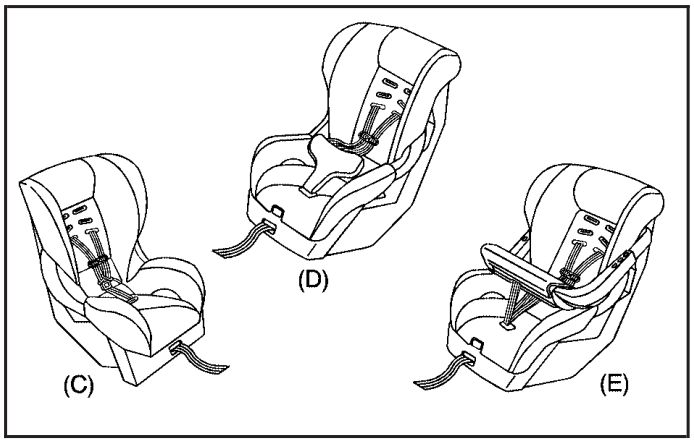

A forward-facing child seat (C-E) provides restraint for the child's body with the harness and also sometimes with surfaces such as T-shaped or shelf-like shields.

Downloaded from www.Manualslib.com manuals search engine

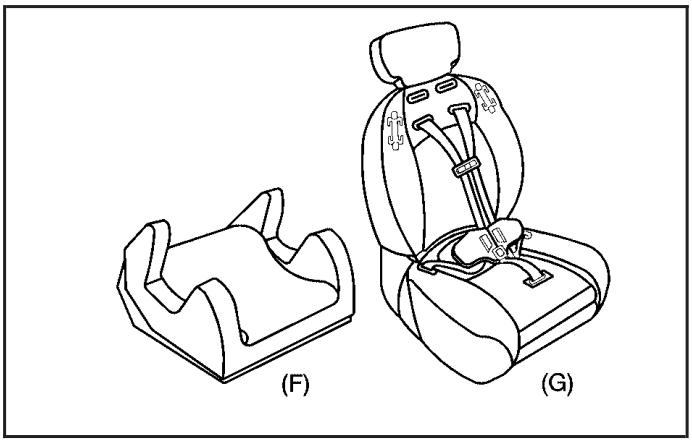

A booster seat (F-G) is a child restraint designed to improve the fit of the vehicle's safety belt system. Some booster seats have a shoulder belt positioner, and some high-back booster seats have a five-point harness. A booster seat can also help a child to see out the window.

Q: How Should I Use a Child Restraint?

A: A child restraint system is any device designed for use in a motor vehicle to restrain, seat, or position children. A built-in child restraint system is a permanent part of the motor vehicle. An add-on child restraint system is a portable one, which is purchased by the vehicle's owner. To help reduce injuries, an add-on child restraint must be secured in the vehicle. With built-in or add-on child restraints, the child has to be secured within the child restraint.

When choosing an add-on child restraint, be sure the child restraint is designed to be used in a vehicle. If it is, it will have a label saying that it meets federal motor vehicle safety standards. Then follow the instructions for the restraint. You may find these instructions on the restraint itself or in a booklet, or both.

Downloaded from www.Manualslib.com manuals search engine

Securing an Add-on Child Restraint in the Vehicle

⚠ CAUTION:

A child can be seriously injured or killed in a crash if the child restraint is not properly secured in the vehicle. Make sure the child restraint is properly installed in the vehicle using the vehicle's safety belt or LATCH system, following the instructions that came with that restraint, and also the instructions in this manual.

To help reduce the chance of injury, the child restraint must be secured in the vehicle. Child restraint systems must be secured in vehicle seats by lap belts or the lap belt portion of a lap-shoulder belt, or by the LATCH system.

See *Lower Anchors and Tethers for Children (LATCH) on page 49* for more information. A child can be endangered in a crash if the child restraint is not properly secured in the vehicle.

When securing an add-on child restraint, refer to the instructions that come with the restraint which may be on the restraint itself or in a booklet, or both, and to this manual. The child restraint instructions are important, so if they are not available, obtain a replacement copy from the manufacturer.

Keep in mind that an unsecured child restraint can move around in a collision or sudden stop and injure people in the vehicle. Be sure to properly secure any child restraint in your vehicle — even when no child is in it.

Downloaded from www.Manualslib.com manuals search engine

Securing the Child Within the Child Restraint

There are several systems for securing the child within the child restraint. One system, the three-point harness, has straps that come down over each of the infant's shoulders and buckle together at the crotch. The five-point harness system has two shoulder straps, two hip straps, and a crotch strap. A shield may take the place of hip straps. A T-shaped shield has shoulder straps that are attached to a flat pad which rests low against the child's body. A shelf- or armrest-type shield has straps that are attached to a wide, shelf-like shield that swings up or to the side.

⚠ CAUTION:

A child can be seriously injured or killed in a crash if the child is not properly secured in the child restraint. Make sure the childis properly secured, following the instructions that came with that restraint.

Because there are different systems, it is important to refer to the instructions that come with the restraint. A child can be endangered in a crash if the child is not properly secured in the child restraint.

Where to Put the Restraint

Accident statistics show that children are safer if they are restrained in the rear rather than the front seat. We recommend that child restraints be secured in a rear seat, including an infant riding in a rear-facing infant seat, a child riding in a forward-facing child seat, and an older child riding in a booster seat.

Downloaded from www.Manualslib.com manuals search engine

Your vehicle has a rear seat that will accommodate a rear-facing child restraint. A label on your sun visor says, “Never put a rear-facing child seat in the front.” This is because the risk to the rear-facing child is so great, if the airbag deploys.

⚠ CAUTION:

A child in a rear-facing child restraint can be seriously injured or killed if the right front passenger’s airbag inflates. This is because the back of the rear-facing child restraint would be very close to the inflating airbag.

Even though the passenger sensing system is designed to turn off the passenger’s frontal airbag and seat-mounted side impact airbag

CAUTION: (Continued)

CAUTION: (Continued)

(if equipped) under certain conditions, no system is fail-safe, and no one can guarantee that an airbag will not deploy under some unusual circumstance, even though it is turned off. We recommend that rear-facing child restraints be secured in the rear seat, even if the airbag is off.

If you need to secure a forward-facing child restraint in the right front seat, always move the front passenger seat as far back as it will go. It is better to secure the child restraint in a rear seat.

Wherever you install a child restraint, be sure to secure the child restraint properly.

Keep in mind that an unsecured child restraint can move around in a collision or sudden stop and injure people in the vehicle. Be sure to properly secure any child restraint in your vehicle — even when no child is in it.

Downloaded from www.Manualslib.com manuals search engine

Lower Anchors and Tethers for Children (LATCH)

The LATCH system holds a child restraint during driving or in a crash. This system is designed to make installation of a child restraint easier. The LATCH system uses anchors in the vehicle and attachments on the child restraint that are made for use with the LATCH system.

Make sure that a LATCH-compatible child restraint is properly installed using the anchors, or use the vehicle's safety belts to secure the restraint, following the instructions that came with that restraint, and also the instructions in this manual. When installing a child restraint with a top tether, you must also use either the lower anchors or the safety belts to properly secure the child restraint. A child restraint must never be installed using only the top tether and anchor.

In order to use the LATCH system in your vehicle, you need a child restraint has LATCH attachments. The child restraint manufacturer will provide you with instructions on how to use the child restraint and its attachments. The following explains how to attach a child restraint with these attachments in your vehicle.

Not all vehicle seating positions or child restraints have lower anchors and attachments or top tether anchors and attachments.

Lower Anchors

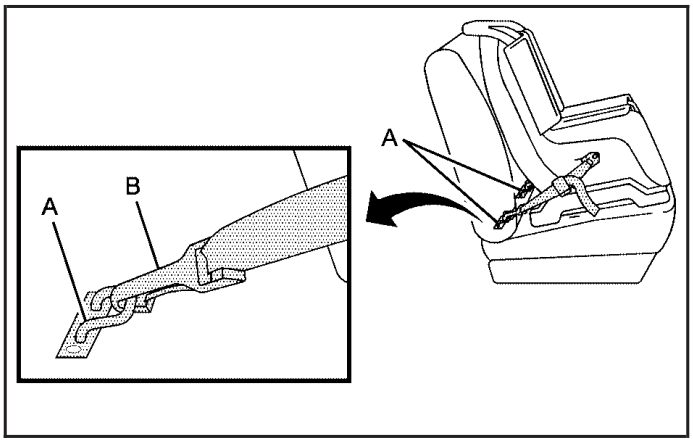

Lower anchors (A) are metal bars built into the vehicle. There are two lower anchors for each LATCH seating position that will accommodate a child restraint with lower attachments (B).

Downloaded from www.Manualslib.com manuals search engine

Top Tether Anchor

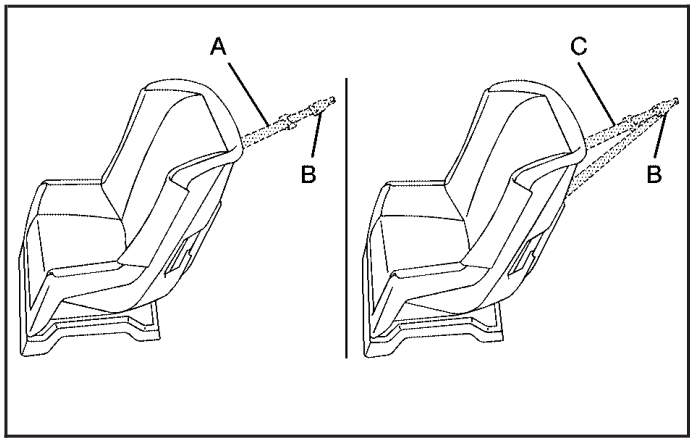

A top tether (A, C) anchors the top of the child restraint to the vehicle. A top tether anchor is built into the vehicle. The top tether attachment (B) on the child restraint connects to the top tether anchor in the vehicle in order to reduce the forward movement and rotation of the child restraint during driving or in a crash.

Your child restraint may have a single tether (A) or a dual tether (C). Either will have a single attachment (B) to secure the top tether to the anchor.

Some child restraints with top tethers are designed for use with or without the top tether being attached. Others require the top tether always to be attached. In Canada, the law requires that forward-facing child restraints have a top tether, and that the tether be attached. In the United States, some child restraints also have a top tether. Be sure to read and follow the instructions for your child restraint.

If the child restraint does not have a top tether, one can be obtained, in kit form, for many child restraints. Ask the child restraint manufacturer whether or not a kit is available.

Downloaded from www.Manualslib.com manuals search engine

Lower Anchor and Top Tether Anchor Locations

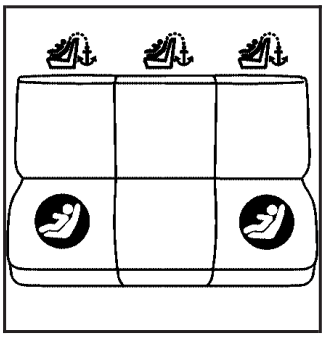

Rear Seat

(Top Tether Anchor): Seating positions with top tether anchors.

(Lower Anchor): Seating positions with two lower anchors.

To assist you in locating the lower anchors, each seating position with lower anchors has two labels, near the crease between the seatback and the seat cushion.

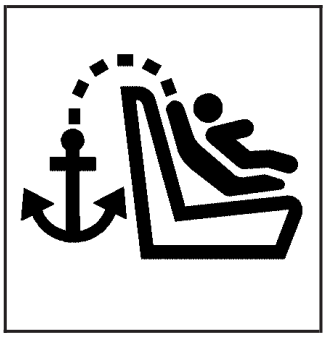

To assist you in locating the top tether anchors, the top tether anchor symbol is located on the trim cover.

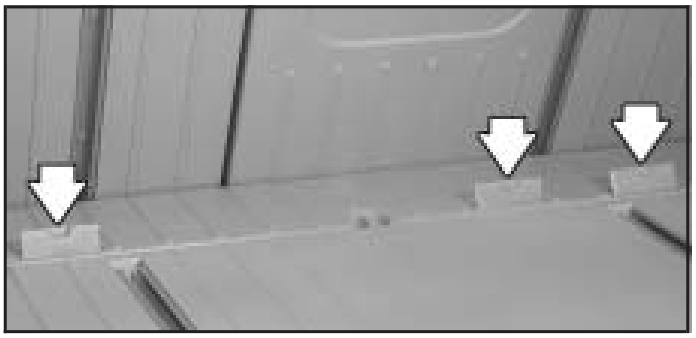

The top tether anchors are located on the floor of the rear cargo area. Open the trim cover to access the anchors. You may have to fold back the cargo mat to access the top tether anchors.

Downloaded from www.Manualslib.com manuals search engine

Be sure to use an anchor located on the same side of the vehicle as the seating position where the child restraint will be placed.

Do not secure a child restraint in the right front passenger's position if a national or local law requires that the top tether be attached, or if the instructions that come with the child restraint say that the top tether must be attached. There is no place to attach the top tether in this position.

Accident statistics show that children are safer if they are restrained in the rear rather than the front seat. See *Where to Put the Restraint on page 47* for additional information.

Securing a Child Restraint Designed for the LATCH System

⚠ CAUTION:

If a LATCH-type child restraint is not attached to anchors, the restraint will not be able to protect the child correctly. In a crash, the child could be seriously injured or killed. Make sure that a LATCH-type child restraint is properly installed using the anchors, or use the vehicle's safety belts to secure the restraint, following the instructions that came with that restraint, and also the instructions in this manual.

Downloaded from www.Manualslib.com manuals search engine

⚠ CAUTION:

Each top tether anchor and lower anchor in the vehicle is designed to hold only one child restraint. Attaching more than one child restraint to a single anchor could cause the anchor or attachment to come loose or even break during a crash. A child or others could be injured if this happens. To help prevent injury to people and damage to your vehicle, attach only one child restraint per anchor.

⚠ CAUTION:

Children can be seriously injured or strangled if a shoulder belt is wrapped around their neck and the safety belt continues to tighten.

CAUTION: (Continued)

CAUTION: (Continued)

Secure any unused safety belts behind the child restraint so children cannot reach them. Pull the shoulder belt all the way out of the retractor to set the lock, if your vehicle has one, after the child restraint has been installed. Be sure to follow the instructions of the child restraint manufacturer.

Notice: **Contact between the child restraint or the LATCH attachment parts and the vehicle's safety belt assembly may cause damage to these parts. Make sure when securing unused safety belts behind the child restraint that there is no contact between the child restraint or the LATCH attachment parts and the vehicle's safety belt assembly.**

Folding an empty rear seat with the safety belts secured may cause damage to the safety belt or the seat. When removing the child restraint, always remember to return the safety belts to their normal, stowed position before folding the rear seat.

Downloaded from www.Manualslib.com manuals search engine

1. Attach and tighten the lower attachments to the lower anchors. If the child restraint does not have lower attachments or the desired seating position does not have lower anchors, secure the child restraint with the top tether and the safety belts. Refer to your child restraint manufacturer instructions and the instructions in this manual.
   1.1. Find the lower anchors for the desired seating position.
   1.2. Put the child restraint on the seat.
   1.3. Attach and tighten the lower attachments on the child restraint to the lower anchors.

2. If the child restraint manufacturer recommends that the top tether be attached, attach and tighten the top tether to the top tether anchor, if equipped. Refer to the child restraint instructions and the following steps:
   2.1. Find the top tether anchor.
   2.2. You may have to fold back the cargo mat to access the top tether anchors.
   2.3. Open the top tether anchor trim cover to expose the anchor.
   2.4. Route, attach, and tighten the top tether according to your child restraint instructions and the following instructions:

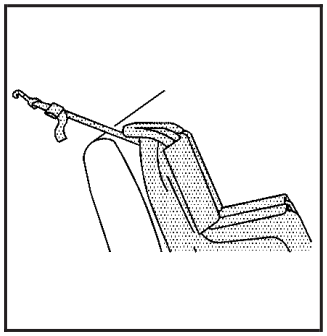

If the position you are using does not have a head restraint and you are using a single tether, route the tether over the seatback.

Downloaded from www.Manualslib.com manuals search engine

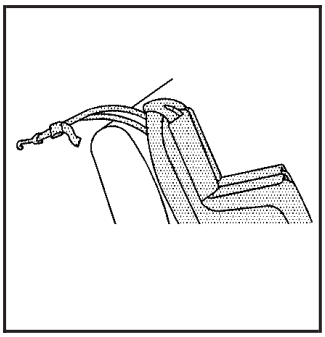

If the position you are using does not have a head restraint and you are using a dual tether, route the tether over the seatback.

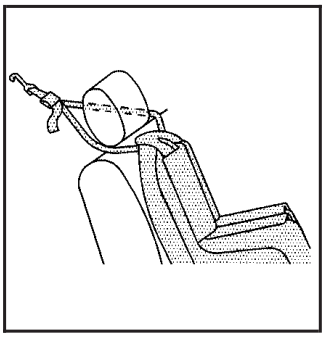

If the position you are using has an adjustable head restraint and you are using a dual tether, route the tether around the head restraint.

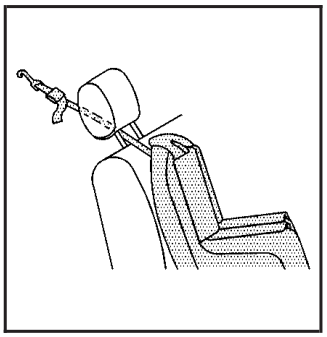

If the position you are using has an adjustable head restraint and you are using a single tether, raise the head restraint and route the tether under the head restraint and in between the head restraint posts.

3. Push and pull the child restraint in different directions to be sure it is secure.

Downloaded from www.Manualslib.com manuals search engine

Securing a Child Restraint in a Rear Seat Position

If your child restraint has the LATCH system, see *Lower Anchors and Tethers for Children (LATCH) on page 49*.

If your child restraint does not have the LATCH system, you will be using the lap-shoulder belt to secure the child restraint in this position. Be sure to follow the instructions that came with the child restraint. Secure the child in the child restraint when and as the instructions say.

1. Put the child restraint on the seat.
2. Pick up the latch plate, and run the lap and shoulder portions of the vehicle's safety belt through or around the restraint. The child restraint instructions will show you how.

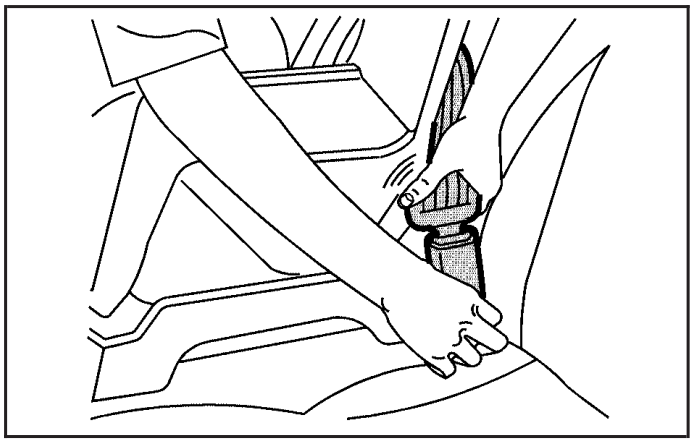

3. Buckle the belt. If the buckle does not click, check to be sure that you are using the correct buckle. The buckle for the center rear passenger position has the word CENTER on it.

   Make sure the release button is positioned so you would be able to unbuckle the safety belt quickly if you ever had to.

Downloaded from www.Manualslib.com manuals search engine

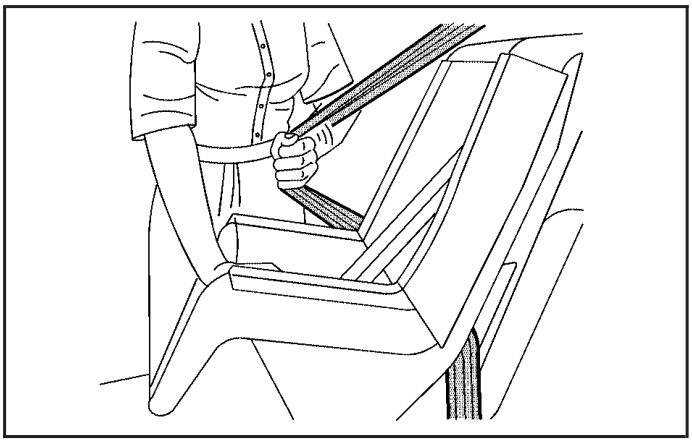

4. Pull the rest of the shoulder belt all the way out of the retractor to set the lock.

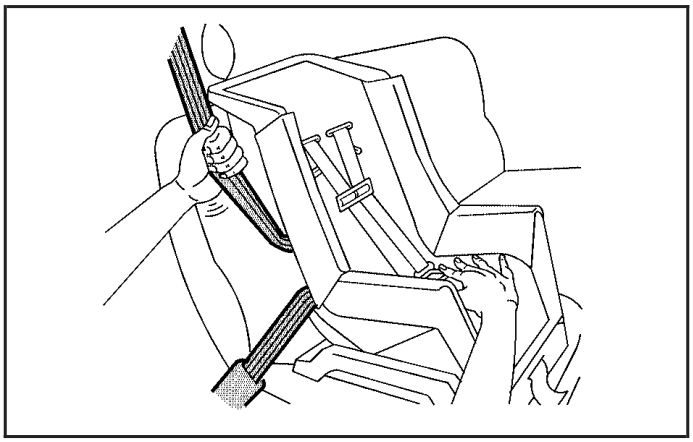

5. To tighten the belt, push down on the child restraint, pull the shoulder portion of the belt to tighten the lap portion of the belt, and feed the shoulder belt back into the retractor. If you are using a forward-facing child restraint, you may find it helpful to use your knee to push down on the child restraint as you tighten the belt.

Downloaded from www.Manualslib.com manuals search engine

6. If your child restraint manufacturer recommends using a top tether, attach and tighten the top tether to the top tether anchor. Refer to the instructions that came with the child restraint and to *Lower Anchors and Tethers for Children (LATCH) on page 49*.
7. Push and pull the child restraint in different directions to be sure it is secure.

To remove the child restraint, if your child restraint has a top tether, disconnect the top tether from the top tether anchor. Unbuckle the vehicle's safety belt and let it go back all the way. The safety belt will move freely again and be ready to work for an adult or larger child passenger.

Securing a Child Restraint in the Right Front Seat Position

Your vehicle has a right front passenger's airbag. A rear seat is a safer place to secure a forward-facing child restraint. See *Where to Put the Restraint on page 47*.

In addition, your vehicle has the passenger sensing system. The passenger sensing system is designed to turn off the right front passenger's frontal airbag, seat-mounted side impact airbag (if equipped), and the safety belt pretensioner, when a child in a child restraint or booster seat is detected. See *Passenger Sensing System on page 74* and *Passenger Airbag Status Indicator on page 163* for more information about the conditions that could affect the passenger sensing system and other important safety information.

Downloaded from www.Manualslib.com manuals search engine

Your vehicle has a label on the sun visor that says, “Never put a rear-facing child seat in the front.” This is because the risk to the rear-facing child is so great, if the airbag deploys.

⚠ CAUTION:

A child in a rear-facing child restraint can be seriously injured or killed if the right front passenger’s airbag inflates. This is because the back of the rear-facing child restraint would be very close to the inflating airbag.

Even though the passenger sensing system is designed to turn off the passenger’s frontal airbag and seat-mounted side impact airbag (if equipped) under certain conditions, no

CAUTION: (Continued)

CAUTION: (Continued)

system is fail-safe, and no one can guarantee that an airbag will not deploy under some unusual circumstance, even though it is turned off. We recommend that rear-facing child restraints be secured in the rear seat, even if the airbag is off.

If you need to secure a forward-facing child restraint in the right front seat, always move the front passenger seat as far back as it will go. It is better to secure the child restraint in a rear seat.

If you need to secure a forward-facing child restraint in the right front seat position, move the seat as far back as it will go before securing the forward-facing child restraint. See *Manual Seats on page 8*.

Downloaded from www.Manualslib.com manuals search engine

If your child restraint has the LATCH system, see *Lower Anchors and Tethers for Children (LATCH) on page 49*.

There is no top tether anchor at the right front seating position. Do not secure a child seat in this position if a national or local law requires that the top tether be anchored or if the instructions that come with the child restraint say that the top tether must be anchored. See *Lower Anchors and Tethers for Children (LATCH) on page 49* if the child restraint has a top tether.

You will be using the lap-shoulder belt to secure the child restraint in this position. Be sure to follow the instructions that came with the child restraint.

Secure the child in the child restraint when and as the instructions say.

1. Your vehicle has airbags. See *Passenger Sensing System on page 74*. We recommend that rear-facing child restraints be secured in a rear seat, even if the airbags are off. If your child restraint is forward-facing, move the seat as far back as it will go before securing the child restraint in this seat. See *Manual Seats on page 8*.

   When the passenger sensing system has turned off the right front passenger's frontal airbag, seat-mounted side impact airbag (if equipped), and the safety belt pretensioner, the OFF indicator in the passenger airbag status indicator should light and stay lit when you turn the ignition to ON. See *Passenger Airbag Status Indicator on page 163*.
2. Put the child restraint on the seat.
3. Pick up the latch plate, and run the lap and shoulder portions of the vehicle's safety belt through or around the restraint. The child restraint instructions will show you how.

Downloaded from www.Manualslib.com manuals search engine

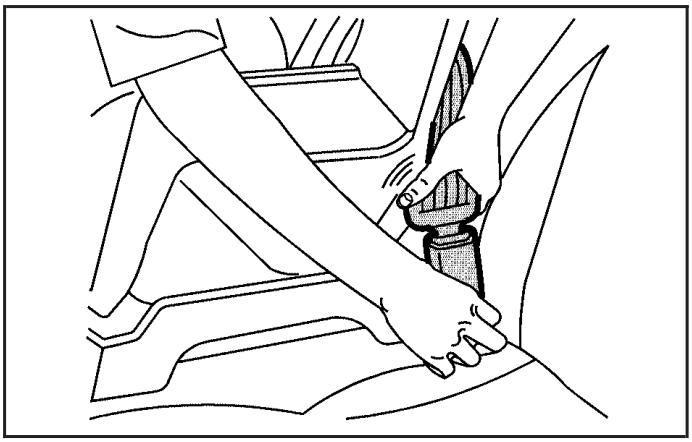

4. Buckle the belt. Make sure the release button is positioned so you would be able to unbuckle the safety belt quickly if you ever had to.

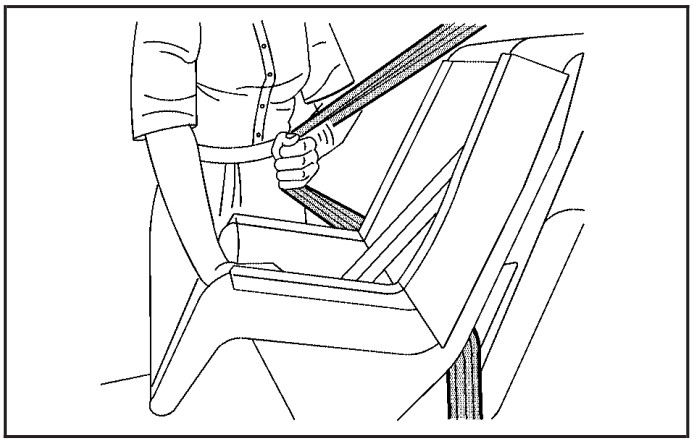

5. Pull the rest of the shoulder belt all the way out of the retractor to set the lock.

Downloaded from www.Manualslib.com manuals search engine

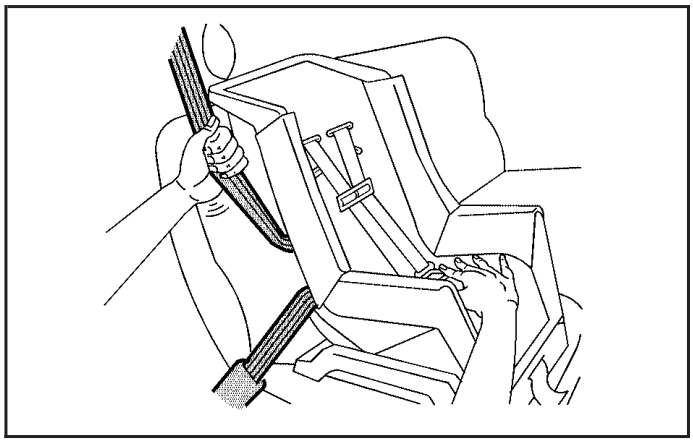

6. To tighten the belt, push down on the child restraint, pull the shoulder portion of the belt to tighten the lap portion of the belt, and feed the shoulder belt back into the retractor. If you are using a forward-facing child restraint, you may find it helpful to use your knee to push down on the child restraint as you tighten the belt. You should not be able to pull more of the belt from the retractor once the lock has been set.
7. Push and pull the child restraint in different directions to be sure it is secure.
8. If the passenger sensing system has turned off the airbags and safety belt pretensioner, the OFF indicator in the passenger airbag status indicator will be lit and stay lit when the key is turned to ON.

If a child restraint has been installed and the ON indicator is lit, turn the vehicle off. Remove the child restraint from the vehicle and reinstall the child restraint with the ignition key in the ACC (Accessory) or LOCK position.

If, after reinstalling the child restraint and restarting the vehicle, the ON indicator is still lit, check to make sure that the vehicle's seatback is not pressing the child restraint into the seat cushion. If this happens, slightly recline the seatback and adjust the seat cushion if possible. Also make sure the child restraint is not trapped under the vehicle head restraint. If this happens, adjust the head restraint.

Downloaded from www.Manualslib.com manuals search engine

If the ON indicator is still lit, secure the child in the child restraint in a rear seat position in the vehicle and check with your dealer.

If the airbag readiness light and the OFF light in the passenger airbag status indicator come on together, it may mean there is a malfunction in the passenger sensing system. Secure the child in the child restraint in a rear seat position in the vehicle and check with your dealer.

To remove the child restraint, unbuckle the vehicle's safety belt and let it go back all the way. The safety belt will move freely again and be ready to work for an adult or larger child passenger.

Airbag System

Your vehicle has the following airbags:

- A frontal airbag for the driver.
- A frontal airbag for the right front passenger.

Your vehicle may also have the following airbags:

- A seat-mounted side impact airbag for the driver.
- A seat-mounted side impact airbag for the right front passenger.
- A roof-mounted side impact airbag for the driver and the passenger seated directly behind the driver.
- A roof-mounted side impact airbag for the right front passenger and the passenger seated directly behind that passenger.

If your vehicle has seat-mounted side impact airbags, it will say SRS-SIDE AIRBAG on a label on the side of the driver's and right front passenger's seat closest to the door.

If your vehicle has roof-mounted side impact airbags, it will say SRS CURTAIN AIRBAG on the trim on the side of the windshield.

Downloaded from www.Manualslib.com manuals search engine

Airbags are designed to supplement the protection provided by safety belts. Even though today's airbags are also designed to help reduce the risk of injury from the force of an inflating bag, all airbags must inflate very quickly to do their job.

Here are the most important things to know about the airbag system:

⚠ CAUTION:

You can be severely injured or killed in a crash if you are not wearing your safety belt — even if you have airbags. Wearing your safety belt during a crash helps reduce your chance of hitting things inside the vehicle or being ejected from it. Airbags are "supplemental restraints" to the safety belts. All airbags are designed to work with safety belts, but do not replace them.

⚠ CAUTION:

Frontal airbags for the driver and passenger are designed to deploy in moderate to severe frontal and near frontal crashes. They are not designed to inflate in rollover, rear crashes, or in many side crashes. And, for some unrestrained occupants, frontal airbags may provide less protection in frontal crashes than more forceful airbags have provided in the past.

Side impact airbags are designed to inflate in moderate to severe crashes where something hits the side of your vehicle. They are not designed to inflate in frontal, in rollover, or in rear crashes.

Everyone in your vehicle should wear a safety belt properly — whether or not there is an airbag for that person.

Downloaded from www.Manualslib.com manuals search engine

⚠ CAUTION:

Both frontal and side impact airbags inflate with great force, faster than the blink of an eye. If you are too close to an inflating airbag, as you would be if you were leaning forward, it could seriously injure you. Safety belts help keep you in position for airbag inflation before and during a crash. Always wear your safety belt even with frontal airbags. The driver should sit as far back as possible while still maintaining control of the vehicle. Occupants should not lean on or sleep against the door.

⚠ CAUTION:

Anyone who is up against, or very close to, any airbag when it inflates can be seriously injured or killed. Airbags plus lap-shoulder belts offer the best protection for adults, but not for young children and infants. Neither the vehicle's safety belt system nor its airbag system is designed for them. Young children and infants need the protection that a child restraint system can provide. Always secure children properly in your vehicle. To read how, see *Older Children on page 37* or *Infants and Young Children on page 40*.

Downloaded from www.Manualslib.com manuals search engine

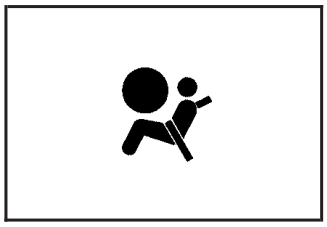

There is an airbag readiness light on the instrument panel, which shows the airbag symbol.

The system checks the airbag electrical system for malfunctions. The light tells you if there is an electrical problem. See *Airbag Readiness Light on page 162* for more information.

Where Are the Airbags?

The driver's frontal airbag is in the middle of the steering wheel.

Downloaded from www.Manualslib.com manuals search engine

The right front passenger's frontal airbag is in the instrument panel on the passenger's side.

If your vehicle has a seat-mounted side impact airbag for the driver, it is in the side of the driver's seatback closest to the door.

Downloaded from www.Manualslib.com manuals search engine

If your vehicle has a seat-mounted side impact airbag for the right front passenger, it is in the side of the passenger's seatback closest to the door.

If your vehicle has a roof-mounted side impact airbag for the driver and the passenger seated directly behind the driver, it is in the ceiling above the side windows.

Downloaded from www.Manualslib.com manuals search engine

If your vehicle has a roof-mounted side impact airbag for the right front passenger and the passenger seated directly behind that passenger, it is in the ceiling above the side windows.

⚠ CAUTION:

If something is between an occupant and an airbag, the airbag might not inflate properly or it might force the object into that person causing severe injury or even death. The path of an inflating airbag must be kept clear. Do not put anything between an occupant and an airbag, and do not attach or put anything on the steering wheel hub or on or near any other airbag covering. If your vehicle has roof-mounted side impact airbags, never secure anything to the roof of your vehicle by routing the rope or tie-down through any door or window opening. If you do, the path of an inflating airbag will be blocked. Do not let seat covers block the inflation path of a side impact airbag. The path of an inflating airbag must be kept clear.

Downloaded from www.Manualslib.com manuals search engine

When Should an Airbag Inflate?

The driver's and right front passenger's frontal airbags are designed to inflate in moderate to severe frontal or near-frontal crashes. But they are designed to inflate only if the impact exceeds a predetermined deployment threshold. Deployment thresholds take into account a variety of desired deployment and non-deployment events and are used to predict how severe a crash is likely to be in time for the airbags to inflate and help restrain the occupants. Whether your frontal airbags will or should deploy is not based on only how fast your vehicle is traveling. It depends largely on what you hit, the direction of the impact, and how quickly your vehicle slows down.

In addition, your vehicle has "dual stage" frontal airbags, which adjust the restraint according to crash severity. Your vehicle is equipped with electronic frontal sensors, which help the sensing system distinguish between a moderate frontal impact and a more severe frontal impact. For moderate frontal impacts, these airbags inflate at a level less than full deployment. For more severe frontal impacts, full deployment occurs.

Frontal airbags may inflate at different vehicle crash speeds. For example:

- If the vehicle hits a stationary object, the airbags could inflate at a different crash speed than if the vehicle hits a moving object.
- If the vehicle hits an object that deforms, the airbags could inflate at a different crash speed than if the vehicle hits an object that does not deform.
- If the vehicle hits a narrow object (like a pole), the airbags could inflate at a different crash speed than if the vehicle hits a wide object (like a wall).
- If the vehicle goes into an object at an angle, the airbags could inflate at a different crash speed than if the vehicle goes straight into the object.

Frontal airbags for the driver and right front passenger may also deploy if a serious impact occurs to the underside of your vehicle such as hitting a curb, falling into a deep hole, or landing hard. The frontal airbags (driver and right front passenger) are not intended to inflate during vehicle rollovers, rear impacts, or in many side impacts.

Downloaded from www.Manualslib.com manuals search engine

It is possible that, in a crash involving the front of your vehicle, only one of the two frontal airbags in your vehicle will deploy. This is rare, but it can happen in a crash just severe enough to make a frontal airbag inflate.

Side impact airbags are intended to inflate in moderate to severe side crashes. A side impact airbag will inflate if the crash severity is above the system's designed "threshold level." The threshold level can vary with specific vehicle design. Side impact airbags are not intended to inflate in frontal or near-frontal impacts, rollovers or in many rear impacts. Your vehicle has sensors which detect side impacts. These sensors signal the appropriate side airbag to inflate. Both side impact airbags (seat-mounted and roof-mounted) are intended to deploy on the side of the vehicle that is struck. It is possible that, in a crash involving the rear side of your vehicle, that only the roof-mounted airbag will deploy.

In any particular crash, no one can say whether an airbag should have inflated simply because of the damage to a vehicle or because of what the repair costs were.

For frontal airbags, inflation is determined by what the vehicle hits, the angle of the impact, vehicle speed, and how quickly the vehicle slows down in frontal and near-frontal impacts. For side impact airbags, inflation is determined by the location and severity of the impact.

What Makes an Airbag Inflate?

In an impact of sufficient severity, the airbag sensing system detects that the vehicle is in a crash. The sensing system triggers a release of gas from the inflator, which inflates the airbag. The inflator, airbag and related hardware are all part of the airbag modules. Frontal airbag modules are located inside the steering wheel and the instrument panel. For vehicles with seat-mounted side impact airbags, there are also airbag modules in the side of the front seatbacks closest to the door. For vehicles with roof-mounted side impact airbags, there are also airbag modules in the ceiling of the vehicle, near the side window.

Downloaded from www.Manualslib.com manuals search engine

How Does an Airbag Restrain?

In moderate to severe frontal or near frontal collisions, even belted occupants can contact the steering wheel or the instrument panel. In moderate to severe side collisions, even belted occupants can contact the inside of the vehicle. Airbags supplement the protection provided by safety belts. Airbags distribute the force of the impact more evenly over the occupant's upper body, stopping the occupant more gradually. But the frontal airbags would not help you in many types of collisions, including rollovers, rear impacts, and many side impacts, primarily because an occupant's motion is not toward the airbag. Side impact airbags would not help you in many types of collisions, including many frontal or near frontal collisions, rollovers, and rear impacts.

Airbags should never be regarded as anything more than a supplement to safety belts, and then only in moderate to severe frontal or near-frontal collisions for the driver's and right front passenger's frontal airbags, and only in moderate to severe side collisions for vehicles with side impact airbags.

What Will You See After an Airbag Inflates?

After the frontal and seat-mounted side impact airbags inflate, they quickly deflate, so quickly that some people may not even realize an airbag inflated. Roof-mounted side impact airbags may still be at least partially inflated minutes after the vehicle comes to rest. Some components of the airbag module — the steering wheel hub for the driver's airbag, the instrument panel for the right front passenger's bag, the side of the seatback closest to the door for the seat-mounted side impact airbags (if equipped), and the garnish trim and the area along the ceiling of your vehicle near the side windows for the roof–mounted side impact airbags (if equipped) — may be hot for a short time. The parts of the airbag that come into contact with you may be warm, but not too hot to touch.

Downloaded from www.Manualslib.com manuals search engine

There may be some smoke and dust coming from the vents in the deflated airbags. Airbag inflation does not prevent the driver from seeing out of the windshield or being able to steer the vehicle, nor does it prevent people from leaving the vehicle.

⚠ CAUTION:

When an airbag inflates, there may be dust in the air. This dust could cause breathing problems for people with a history of asthma or other breathing trouble. To avoid this, everyone in the vehicle should get out as soon as it is safe to do so. If you have breathing problems but cannot get out of the vehicle after an airbag inflates, then get fresh air by opening a window or a door. If you experience breathing problems following an airbag deployment, you should seek medical attention.

Your vehicle has a feature that may automatically unlock the doors, turn the interior lamps on, and turn the hazard warning flashers on when the airbags inflate. You can lock the doors, turn the interior lamps off, and turn the hazard warning flashers off again by using the controls for those features.

In many crashes severe enough to inflate the airbag, windshields are broken by vehicle deformation. Additional windshield breakage may also occur from the right front passenger airbag.

- Airbags are designed to inflate only once. After an airbag inflates, you will need some new parts for the airbag system. If you do not get them, the airbag system will not be there to help protect you in another crash. A new system will include airbag modules and possibly other parts. The service manual for your vehicle covers the need to replace other parts.

Downloaded from www.Manualslib.com manuals search engine

- Your vehicle has a crash sensing and diagnostic module which records information after a crash. See *Vehicle Data Collection and Event Data Recorders on page 411*.
- Let only qualified technicians work on the airbag system. Improper service can mean that the airbag system will not work properly. See your dealer for service.

Passenger Sensing System

Your vehicle has a passenger sensing system. A passenger airbag status indicator on the instrument panel will be visible when you turn your ignition key to ON.

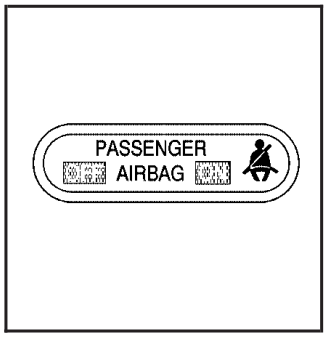

The words ON and OFF will be visible in the passenger airbag status indicator during the system check.

When the system check is complete, either the word ON or the word OFF will be visible depending on whether the seat is occupied and/or the weight of the occupant. See *Passenger Airbag Status Indicator on page 163*. The passenger sensing system will turn off the right front passenger's frontal airbag, seat-mounted side impact airbag (if equipped), and the safety belt pretensioner under certain conditions. The driver's airbags are not part of the passenger sensing system.

The passenger sensing system works with sensors that are part of the right front passenger's seat assembly and safety belt assembly. The sensors are designed to detect the presence of a properly-seated occupant and determine if the right front passenger's frontal airbag, seat-mounted side impact airbag (if equipped), and the safety belt pretensioner should be enabled (may inflate) or not.

Downloaded from www.Manualslib.com manuals search engine

Accident statistics show that children are safer if they are restrained in the rear rather than the front seat. We recommend that child restraints be secured in a rear seat, including an infant riding in a rear-facing infant seat, a child riding in a forward-facing child seat and an older child riding in a booster seat.

Your vehicle has a rear seat that will accommodate a rear-facing child restraint. A label on your sun visor says, “Never put a rear-facing child seat in the front.” This is because the risk to the rear-facing child is so great, if the airbag deploys.

⚠ CAUTION:

A child in a rear-facing child restraint can be seriously injured or killed if the right front passenger’s airbag inflates. This is because the back of the rear-facing child restraint would be very close to the inflating airbag.

CAUTION: (Continued)

CAUTION: (Continued)

Even though the passenger sensing system is designed to turn off the passenger’s frontal airbag and seat-mounted side impact airbag (if equipped) under certain conditions, no system is fail-safe, and no one can guarantee that an airbag will not deploy under some unusual circumstance, even though it is turned off. We recommend that rear-facing child restraints be secured in the rear seat, even if the airbag is off.

If you need to secure a forward-facing child restraint in the right front seat, always move the front passenger seat as far back as it will go. It is better to secure the child restraint in a rear seat.

Downloaded from www.Manualslib.com manuals search engine

The passenger sensing system is designed to turn off the right front passenger's frontal airbag, seat-mounted side impact airbag (if equipped), and the safety belt pretensioner if:

- The right front passenger seat is unoccupied.
- The system determines that a small child is present in a child restraint.
- The system determines that a small child is present in a booster seat.
- A right front passenger takes his/her weight off of the seat for a period of time.
- The right front passenger seat is occupied by a smaller person, such as a child who has outgrown child restraints.
- Or, if there is a critical problem with the airbag system or the passenger sensing system.

When the passenger sensing system has turned off the right front passenger's frontal airbag, seat-mounted side impact airbag (if equipped), and the safety belt pretensioner, the OFF indicator will light and stay lit to remind you that the airbag is off.

If a child restraint has been installed and the ON indicator is lit, turn the vehicle off. Remove the child restraint from the vehicle and reinstall the child restraint with the ignition key in the ACC or LOCK position, following the child restraint manufacturer's directions and refer to *Securing a Child Restraint in the Right Front Seat Position on page 58*.

If, after reinstalling the child restraint and restarting the vehicle, the ON indicator is still lit, check to make sure that the vehicle's seatback is not pressing the child restraint into the seat cushion. If this happens, slightly recline the vehicle's seatback and adjust the seat cushion if possible. Also make sure the child restraint is not trapped under the vehicle head restraint. If this happens, adjust the head restraint.

If the ON indicator is still lit, secure the child in the child restraint in a rear seat position in the vehicle and check with your dealer.

Downloaded from www.Manualslib.com manuals search engine

An object, person or child in the rear seat contacting or pressing the right front passenger's seatback, or objects stowed under the right front passenger's seat, may affect the proper functioning of the passenger sensing system.

When you use a safety belt extender in the right front passenger's seat, make sure the passenger airbag status indicator shows the word ON. If the indicator shows OFF, disconnect the extender's latch from the buckle then reconnect the safety belt. Make sure the indicator light shows ON, then reconnect the safety belt extender. If you use the safety belt extender while the indicator light shows OFF, the right front passenger's frontal airbag, seat-mounted side impact airbag (if equipped), and the safety belt pretensioner may not activate correctly. See *Airbag System on page 63* for important safety information about your airbags.

The passenger sensing system is designed to enable (may inflate) the right front passenger's frontal airbag, seat-mounted side impact airbag (if equipped), and the safety belt pretensioner anytime the system senses that a person of adult size is sitting properly in the right front passenger's seat. When the passenger sensing system has allowed the airbags and pretensioner to be enabled, the ON indicator will light and stay lit to remind you that the airbags and pretensioner are active.

For some children who have outgrown child restraints and for very small adults, the passenger sensing system may or may not turn off the airbags and pretensioner, depending upon the person's seating posture and body build. Everyone in your vehicle who has outgrown child restraints should wear a safety belt properly — whether or not there is an airbag for that person.

Downloaded from www.Manualslib.com manuals search engine

If a person of adult-size is sitting in the right front passenger's seat, but the OFF indicator is lit, it could be because that person is not sitting properly in the seat. If this happens, turn the vehicle off and ask the person to place the seatback in the fully upright position, then sit upright in the seat, centered on the seat cushion, with the person's legs comfortably extended. Restart the vehicle and have the person remain in this position for about two minutes. This will allow the system to detect that person and then enable the passenger's airbags.

If the airbag readiness light and the OFF light in the passenger airbag status indicator come on together, it may mean there is a malfunction in the passenger sensing system. Secure the child in the child restraint in a rear seat position in the vehicle and check with your dealer.

Downloaded from www.Manualslib.com manuals search engine

⚠ CAUTION:

If the airbag readiness light in the instrument panel cluster ever comes on and stays on, it means that something may be wrong with the airbag system. If this ever happens, have the vehicle serviced promptly, because an adult-size person sitting in the right front passenger's seat may not have the protection of the frontal airbag. See *Airbag Readiness Light on page 162* for more on this, including important safety information.

Aftermarket equipment, such as seat covers or seat backpacks, can affect how well the passenger sensing system operates. You may want to consider not using seat covers, seat backpacks, or other aftermarket equipment if your vehicle has the passenger sensing system. See *Adding Equipment to Your Airbag-Equipped Vehicle on page 81* for more information about modifications that can affect how the system operates.

⚠ CAUTION:

Stowing of articles under the passenger's seat or between the passenger's seat cushion and seatback may interfere with the proper operation of the passenger sensing system.

Downloaded from www.Manualslib.com manuals search engine

Servicing Your Airbag-Equipped Vehicle

Airbags affect how your vehicle should be serviced. There are parts of the airbag system in several places around your vehicle. You do not want the system to inflate while someone is working on your vehicle. Your dealer and the service manual have information about servicing your vehicle and the airbag system. To purchase a service manual, see *Service Publications Ordering Information on page 417*.

⚠ CAUTION:

For up to 10 seconds, after the ignition is turned off and the battery is disconnected, an airbag can still inflate during improper service. You can be injured if you are close to an airbag when it inflates. Avoid yellow connectors. They are probably part of the airbag system. Be sure to follow proper service procedures, and make sure the person performing work for you is qualified to do so.

The airbag system does not need regular maintenance.

Downloaded from www.Manualslib.com manuals search engine

Adding Equipment to Your Airbag-Equipped Vehicle

Q: Is there anything I might add to the front or sides of the vehicle that could keep the airbags from working properly?

A: Yes. If you add things that change your vehicle's frame, bumper system, height, front end or side sheet metal, they may keep the airbag system from working properly. Also, the airbag system may not work properly if you relocate any of the airbag sensors. If you have any questions about this, you should contact Customer Assistance before you modify your vehicle. The phone numbers and addresses for Customer Assistance are in Step Two of the Customer Satisfaction Procedure in this manual. See *Customer Satisfaction Procedure on page 400*.

Q: Because I have a disability, I have to get my vehicle modified. How can I find out whether this will affect my airbag system?

A: Changing or moving any parts of the front seats, safety belts, the airbag sensing and diagnostic module, steering wheel, instrument panel, ceiling headliner, ceiling and pillar garnish trim, roof-mounted airbag modules, or airbag wiring can affect the operation of the airbag system. If you have questions, call Customer Assistance. The phone numbers and addresses for Customer Assistance are in Step Two of the Customer Satisfaction Procedure in this manual. See *Customer Satisfaction Procedure on page 400*.

Downloaded from www.Manualslib.com manuals search engine

Restraint System Check

Checking the Restraint Systems

Now and then, make sure the safety belt reminder light and all your belts, buckles, latch plates, retractors and anchorages are working properly. Look for any other loose or damaged safety belt system parts. If you see anything that might keep a safety belt system from doing its job, have it repaired. Keep safety belts clean and dry. See *Care of Safety Belts on page 357* for more information.

Torn or frayed safety belts may not protect you in a crash. They can rip apart under impact forces. If a belt is torn or frayed, get a new one right away.

Also look for any opened or broken airbag covers, and have them repaired or replaced. (The airbag system does not need regular maintenance.)

Notice: **If you damage the covering for the driver's or the right front passenger's airbag, or the airbag covering on the driver's and right front passenger's seatback (if equipped), or the side impact airbag covering on the ceiling near the side windows (if equipped), the bag may not work properly. You may have to replace the airbag module in the steering wheel, both the airbag module and the instrument panel for the right front passenger's airbag, the airbag module and seatback for the driver's and right front passenger's seat-mounted side impact airbags (if equipped), or side impact airbag module and ceiling covering for the roof-mounted side impact airbags (if equipped). Do not open or break the airbag coverings.**

Downloaded from www.Manualslib.com manuals search engine

Replacing Restraint System Parts After a Crash

⚠ CAUTION:

A crash can damage the restraint systems in your vehicle. A damaged restraint system may not properly protect the person using it, resulting in serious injury or even death in a crash. To help make sure your restraint systems are working properly after a crash, have them inspected and any necessary replacements made as soon as possible.

If you have had a crash, do you need new belts or LATCH system parts?

After a very minor collision, nothing may be necessary. But if the belts were stretched, as they would be if worn during a more severe crash, then you need new parts.

If the LATCH system was being used during a more severe crash, you may need new LATCH system parts.

If belts are cut or damaged, replace them. Collision damage also may mean you will need to have LATCH system, safety belt or seat parts repaired or replaced. New parts and repairs may be necessary even if the belt or LATCH system was not being used at the time of the collision.

If an airbag inflates, you will need to replace airbag system parts. See the part on the airbag system earlier in this section.

If the frontal airbags inflate you will also need to replace the driver and front passenger's safety belt retractor assembly. Be sure to do so. Then the new retractor assembly will be there to help protect you in a collision.

After a crash you may need to replace the driver and front passenger's safety belt retractor assemblies, even if the frontal airbags have not deployed. The driver and front passenger's safety belt retractor assemblies contain the safety belt pretensioners. Have your safety belt pretensioners checked if your vehicle has been in a collision, or if your airbag readiness light stays on after you start your vehicle or while you are driving. See *Airbag Readiness Light on page 162*.

Downloaded from www.Manualslib.com manuals search engine

NOTES

Downloaded from www.Manualslib.com manuals search engine

Section 2 Features and Controls

Keys 87
Remote Keyless Entry (RKE) System 89
Remote Keyless Entry (RKE) System Operation 90
Doors and Locks 92
Door Locks 92
Power Door Locks 94
Rear Door Security Locks 95
Liftgate/Liftglass 96
Windows 98
Manual Windows 99
Power Windows 99
Sun Visors 99
Theft-Deterrent Systems 100
Content Theft-Deterrent 100
Starting and Operating Your Vehicle 102
New Vehicle Break-In 102
Ignition Positions 103
Starting the Engine 104
Engine Coolant Heater 106
Automatic Transaxle Operation 108
Overdrive Off 111
Manual Transaxle Operation 111
Parking Brake 114
Shifting Into Park (P) (Automatic Transaxle) 115
Shifting Out of Park (P) (Automatic Transaxle) 117
Parking Your Vehicle (Manual Transaxle) 118
Parking Over Things That Burn 118
Engine Exhaust 119
Running the Engine While Parked 120
Mirrors 121
Manual Rearview Mirror 121
Manual Rearview Mirror with OnStar® 121
Automatic Dimming Rearview Mirror 122
Outside Remote Control Mirrors 122
Outside Convex Mirror 123
OnStar® System 123

Downloaded from www.Manualslib.com manuals search engine

Section 2 Features and Controls

Storage Areas 127
Glove Box 127
Cupholder(s) 127
Coinholder(s) 127
Instrument Panel Storage Area 127
Center Console Storage Area 127
Floor Mats 127
Rear Storage Area 128
Rear Cargo Accessory Track System 129
Cargo Cover 129
Cargo Tie Downs 130
Sunroof 131

Downloaded from www.Manualslib.com manuals search engine

Keys

⚠ CAUTION:

Leaving children in a vehicle with the ignition key is dangerous for many reasons, children or others could be badly injured or even killed. They could operate the power windows or other controls or even make the vehicle move. The windows will function with the keys in the ignition and they could be seriously injured or killed if caught in the path of a closing window. Do not leave the keys in a vehicle with children.

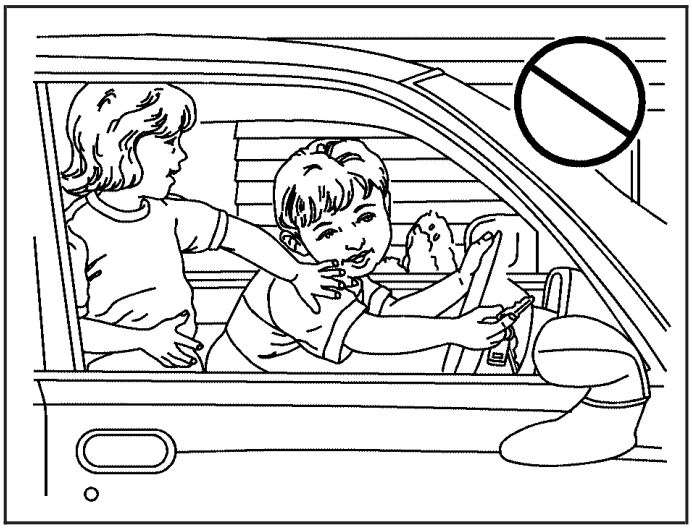

Downloaded from www.Manualslib.com manuals search engine

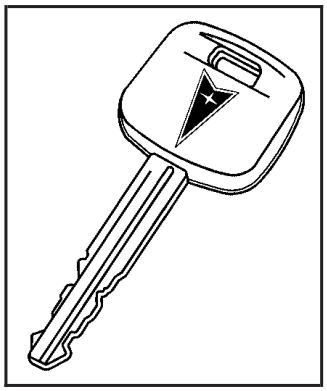

One key is used for the ignition, the doors and all other locks.

When a new vehicle is delivered, the dealer removes the key tag from the key and gives it to the first owner.

Each tag has a code on it that tells your dealer or a qualified locksmith how to make extra keys. Keep the tag in a safe place. If you lose your key, you'll be able to have a new one made easily using this code.

If you need a new key, contact your dealership to obtain the correct key code. See *Roadside Assistance Program on page 406* for more information.

Notice: **If you ever lock your keys in your vehicle, you may have to damage the vehicle to get in. Be sure you have spare keys.**

Downloaded from www.Manualslib.com manuals search engine

Remote Keyless Entry (RKE) System

If the vehicle has the Remote Keyless Entry (RKE) system, it operates on a radio frequency subject to Federal Communications Commission (FCC) Rules and with Industry Canada.

This device complies with Part 15 of the FCC Rules. Operation is subject to the following two conditions:

1. This device may not cause interference.
2. This device must accept any interference received, including interference that may cause undesired operation of the device.

This device complies with RSS-210 of Industry Canada. Operation is subject to the following two conditions:

1. This device may not cause interference.
2. This device must accept any interference received, including interference that may cause undesired operation of the device.

Changes or modifications to this system by other than an authorized service facility could void authorization to use this equipment.

At times you may notice a decrease in range. This is normal for any RKE system. If the transmitter does not work or if you have to stand closer to your vehicle for the transmitter to work, try this:

- Check the distance. You may be too far from your vehicle. You may need to stand closer during rainy or snowy weather.
- Check the location. Other vehicles or objects may be blocking the signal. Take a few steps to the left or right, hold the transmitter higher, and try again.
- Check to determine if battery replacement is necessary. See “Battery Replacement” under *Remote Keyless Entry (RKE) System Operation on page 90*.
- If you are still having trouble, see your dealer or a qualified technician for service.

Downloaded from www.Manualslib.com manuals search engine

Remote Keyless Entry (RKE) System Operation

If your vehicle has this feature, you can lock and unlock your doors from about 3 feet (1 m) up to 30 feet (9 m) away using the remote keyless entry transmitter supplied with your vehicle. The remote keyless entry transmitter will look different if your vehicle was purchased in Canada, however it will operate the same.

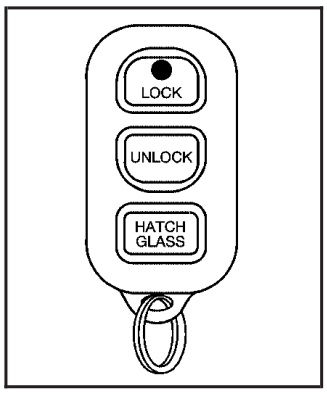

LOCK: Press this button to lock all of the doors.

The turn signal lights will flash once to confirm that the doors have locked.

UNLOCK: Press this button once to unlock the driver's door. The turn signal lights will flash twice and the interior lamps will come on to confirm that the door has unlocked. If the UNLOCK button is pressed again within three seconds, all remaining doors will unlock and the turn signal lights will flash twice and interior lamps will remain on to confirm that all doors & hatch have unlocked. The interior lamps will stay on for 15 seconds or until the ignition is turned on.

HATCH/GLASS: Press this button to open the rear liftglass. If the ignition key is in the ON position, the liftglass cannot be opened by the HATCH/GLASS button on the transmitter.

Downloaded from www.Manualslib.com manuals search engine

Matching Transmitter(s) to Your Vehicle

Each remote keyless entry transmitter is coded to prevent another transmitter from unlocking your vehicle. If a transmitter is lost or stolen, a replacement can be purchased through your dealer. Remember to bring any remaining transmitters with you when you go to your dealer. When the dealer matches the replacement transmitter to your vehicle, any remaining transmitters must also be matched. Once your dealer has coded the new transmitter, the lost transmitter will not unlock your vehicle. Each vehicle can have a maximum of four transmitters matched to it.

Battery Replacement

Under normal use, the battery in your remote keyless entry transmitter should last about three years.

You can tell the battery is weak if the transmitter will not work at the normal range in any location. If you have to get close to your vehicle before the transmitter works, it is probably time to change the battery.

Notice: **When replacing the battery, use care not to touch any of the circuitry. Static from your body transferred to these surfaces may damage the transmitter.**

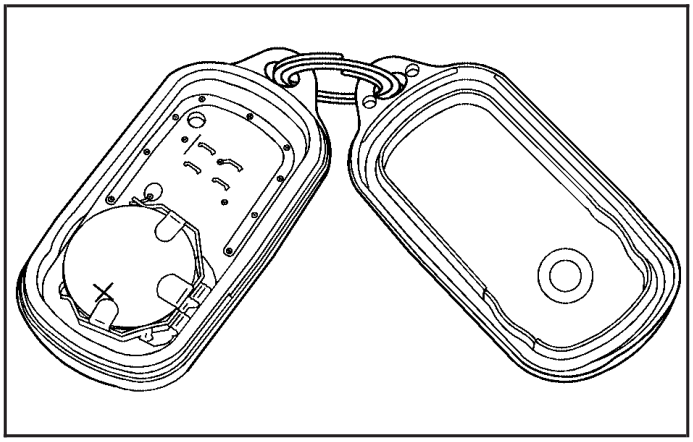

Downloaded from www.Manualslib.com manuals search engine

To replace the battery, do the following:

1. Insert a small coin or similar object to separate the bottom half from the top half of the transmitter.
2. Remove the battery and replace it with the new one. Make sure the positive side of the battery faces upward. For battery replacement, use a three-volt battery, type CR2032, or equivalent.
3. Snap the transmitter back together tightly to be sure no moisture can enter.

Doors and Locks

Door Locks

⚠ CAUTION:

Unlocked doors can be dangerous.

- **Passengers, especially children, can easily open the doors and fall out of a moving vehicle. When a door is locked, the handle will not open it. You increase the chance of being thrown out of the vehicle in a crash if the doors are not locked. So, wear safety belts properly and lock the doors whenever you drive.**

CAUTION: (Continued)

Downloaded from www.Manualslib.com manuals search engine

CAUTION: (Continued)

- **Young children who get into unlocked vehicles may be unable to get out. A child can be overcome by extreme heat and can suffer permanent injuries or even death from heat stroke. Always lock your vehicle whenever you leave it.**
- **Outsiders can easily enter through an unlocked door when you slow down or stop your vehicle. Locking your doors can help prevent this from happening.**

There are several ways to lock and unlock your vehicle.

From the outside, use your key or the remote keyless entry transmitter, if equipped. See *Remote Keyless Entry (RKE) System Operation on page 90* for more information.

If your vehicle has power door locks, open the driver's door by turning the key in the lock toward the rear of the vehicle. Turning the key back toward the center, then toward the rear again will unlock all of the doors. Using the key in the passenger's door will also unlock all of the doors.

Lock a door by turning the key toward the front of the vehicle. If you have power door locks, all the doors will lock.

Downloaded from www.Manualslib.com manuals search engine

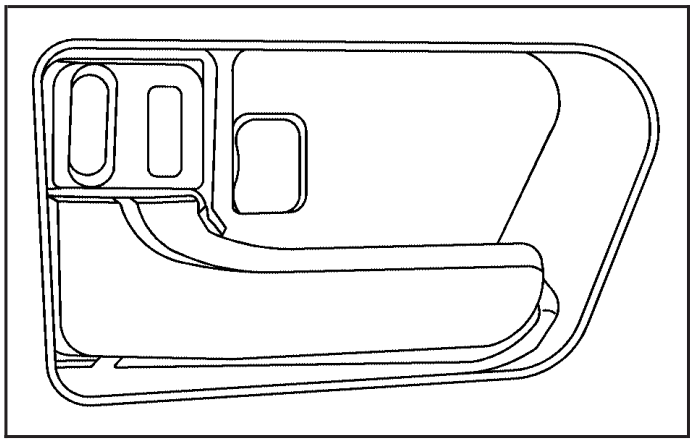

To manually lock the door from the inside, press the knob on the door forward. To unlock the door, press the knob rearward. With manual locks, you must use the key to lock and unlock the liftgate.

Power Door Locks

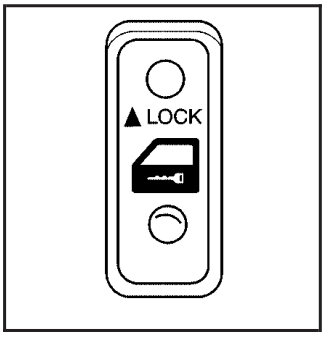

If your vehicle has this feature, the power door lock switch is located on the armrest of the driver's and front passenger's door.

(Power Door Lock): Press the top of the switch to lock all the doors. Press the bottom of the switch to unlock all the doors.

Downloaded from www.Manualslib.com manuals search engine

Rear Door Security Locks

Your vehicle is equipped with rear door security locks that help prevent passengers from opening the rear doors on your vehicle from the inside.

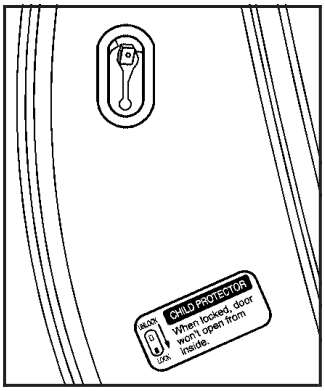

The security locks are located on the inside of the rear door trim.

To use these locks, do the following:

1. Slide the lever down.
2. Close the door.
3. Do the same thing to the other rear door lock.

The rear doors on your vehicle cannot be opened from the inside when this feature is in use.

To open a rear door with the security lock, do the following:

1. Unlock the door from the inside.
2. Then open the door from the outside.

If you don't cancel the security lock feature, adults and older children who ride in the rear won't be able to open the rear door from the inside. You should let adults and older children know how these security locks work, and how to cancel the locks.

Downloaded from www.Manualslib.com manuals search engine

To cancel the rear door security lock, do the following:

1. Unlock the door from the inside and open the door from the outside.
2. Slide the lever up.
3. Do the same for the other rear door.

The rear door locks will now work normally.

Liftgate/Liftglass

⚠ CAUTION:

It can be dangerous to drive with the liftgate or liftglass open because carbon monoxide (CO) gas can come into your vehicle. You cannot see or smell CO. It can cause unconsciousness and even death. If you must drive with the liftgate open or if electrical wiring or other cable connections must pass through the seal between the body and the liftgate or liftglass:

- **Make sure all other windows are shut.**
- **Turn the fan on your climate control system to its highest speed and select the control setting that will force outside air into your vehicle. See "Climate Control System" in the Index.**
- **If you have air outlets on or under the instrument panel, open them all the way. See *Engine Exhaust on page 119*.**

Downloaded from www.Manualslib.com manuals search engine

Liftgate/Liftglass Release

To unlock and open the liftgate using the key, insert the key into the keyhole and turn counterclockwise. Raise the liftgate by hand.

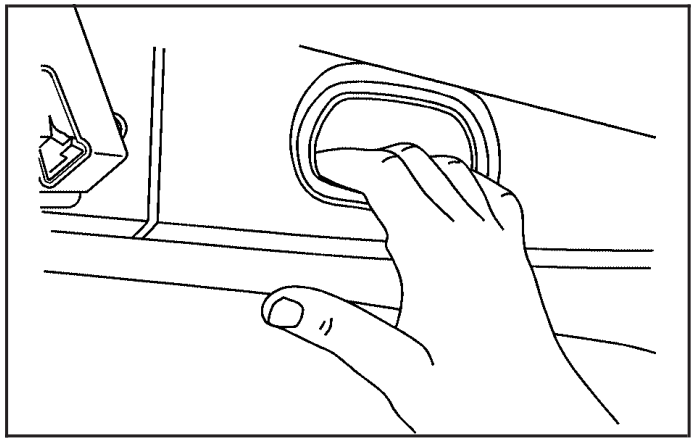

When closing the liftgate, use the handle to pull it down.

To lock the liftgate, turn the key clockwise to the first position.

To open the liftglass using the key, insert the key into the keyhole and turn clockwise to the second position. Use the handle in the center of the liftglass to help in lifting the glass.

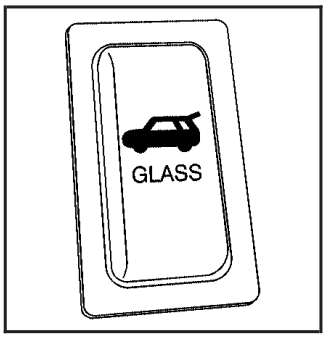

Your vehicle may have a liftglass release button which is located on the instrument panel to the left of the steering wheel. Press this button to release the liftglass.

Downloaded from www.Manualslib.com manuals search engine

Windows

⚠ CAUTION:

Leaving children, helpless adults, or pets in a vehicle with the windows closed is dangerous. They can be overcome by the extreme heat and suffer permanent injuries or even death from heat stroke. Never leave a child, a helpless adult, or a pet alone in a vehicle, especially with the windows closed in warm or hot weather.

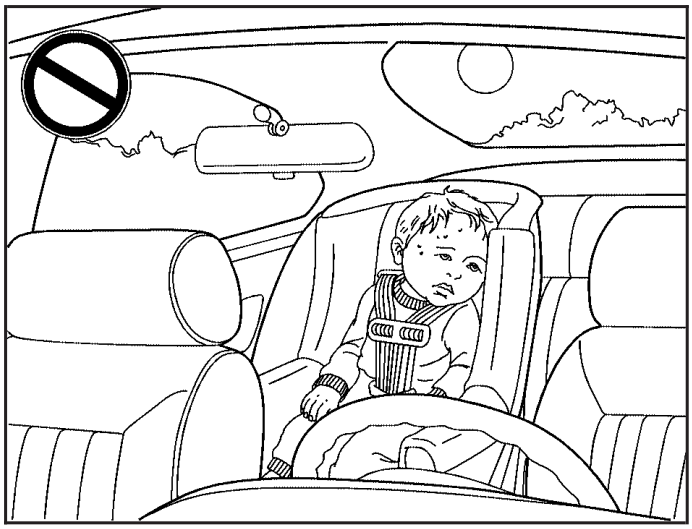

Downloaded from www.Manualslib.com manuals search engine

Manual Windows

Use the window crank to open and close each window.

Power Windows

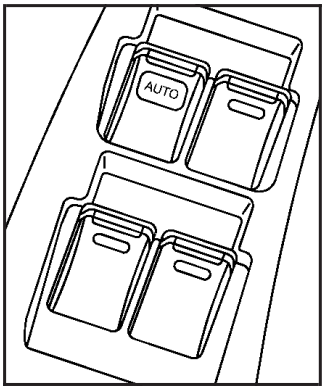

If your vehicle has this feature, the switches controlling the driver's and passenger's windows are located on the driver's door.

The power window switch on each passenger door controls that window only. These switches work while the ignition is turned to ON.

Press the front of a switch to lower a window and lift the front of the switch to raise a window.

AUTO (Express-Down): Press this switch all the way down and release it to lower the driver's window quickly.

(Lock-Out): Press the window lock-out button, located near the driver's power door lock switches, to disable the passenger's power window switches. Press the button again to enable the window switches.

Only the driver's window will operate with the lock-out button pressed.

Sun Visors

To block out glare, swing down the sun visors. You can also swing them to the side.

The visors can be slid along the rod for extended coverage for the side windows unless your vehicle has roof-mounted side impact airbags.

Visor Vanity Mirror

Swing down the sun visor to expose the vanity mirror. The vanity mirror may have a cover. Lift the cover to expose the mirror.

Downloaded from www.Manualslib.com manuals search engine

Theft-Deterrent Systems

Vehicle theft is big business, especially in some cities. Although your vehicle has a number of theft-deterrent features, we know that nothing we put on it can make it impossible to steal.

Content Theft-Deterrent

If your vehicle has this feature, the theft-deterrent system is designed to activate an alarm if any of the side doors or the liftgate is forcibly unlocked or if the battery terminal is disconnected and then reconnected while the system is set.

The alarm will sound the horn intermittently and flash the headlamps, turn signal lamps and interior lights. If the driver's or front passenger's side doors are unlocked forcibly, the other side doors and the liftgate will be locked automatically.

Arming the System

To arm the system, do the following:

1. Turn the ignition key to the LOCK position and remove it.
2. Close and lock all doors and liftgate with the key or remote keyless entry transmitter.

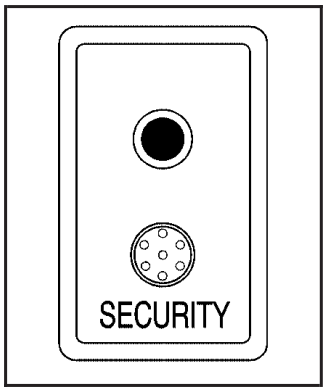

The indicator light located on the instrument panel to the left of the steering wheel will come on when all doors and liftgate are closed and locked.

The system will be automatically set after 30 seconds. When the system is set, the indicator light will start flashing.

3. After the indicator light starts flashing, you may leave the vehicle.

   Do not leave anyone in the vehicle when you set the system, because unlocking the vehicle from the inside will activate the system.

Downloaded from www.Manualslib.com manuals search engine

Testing the Alarm

To test the alarm, do the following:

1. Open all the windows.
2. Set the system as described in the previous procedure. The doors and liftgate should be locked with the key or remote keyless entry transmitter. Be sure to wait until the indicator light starts flashing.
3. Unlock the driver's door from the inside. The system should activate the alarm.
4. Stop the alarm as described in the disarming procedure following.
5. Repeat this operation for the other doors. Also check that the system is activated when the battery terminal is disconnected and then reconnected.

   If the system does not work properly, have it checked by your dealer.

How the System Alarm is Activated

The system will activate the alarm under the following conditions:

- If the driver's or front passenger's door is unlocked or if any of the other doors or the liftgate is forcibly opened without the key or remote keyless entry transmitter.
- If the battery terminal is disconnected and then reconnected.
- If the ignition is hot-wired.
- If the side window glass is broken or damaged.

The indicator light will come on when the system is activated.

If the driver's or front passenger's doors are unlocked without using the key or remote keyless entry transmitter, the other doors and the liftgate will be automatically locked again.

After one minute the alarm will automatically stop and the indicator light will start flashing again.

Downloaded from www.Manualslib.com manuals search engine

Reactivating the System

Once the system is set, it will automatically reset the alarm after the alarm stops. The alarm will activate again under the same conditions as described earlier.

Disarming the System

The alarm can be disarmed by doing one of the following:

- Turn the ignition key from LOCK to ON.
- Unlock any of the doors with the key or with the remote keyless entry transmitter.

  If the liftgate or liftglass is opened with the key, the system will still be activated.

Starting and Operating Your Vehicle

New Vehicle Break-In

Notice: **Your vehicle does not need an elaborate break-in. But it will perform better in the long run if you follow these guidelines:**

- **Do not drive at any one constant speed, fast or slow, for the first 500 miles (805 km). Do not make full-throttle starts. Avoid downshifting to brake, or slow, the vehicle.**
- **Avoid making hard stops for the first 200 miles (322 km) or so. During this time your new brake linings are not yet broken in. Hard stops with new linings can mean premature wear and earlier replacement. Follow this breaking-in guideline every time you get new brake linings.**
- **Do not tow a trailer during break-in. See *Towing a Trailer on page 261* for the trailer towing capabilities of your vehicle and more information.**

Following break-in, engine speed and load can be gradually increased.

Downloaded from www.Manualslib.com manuals search engine

Ignition Positions

With the key in the ignition switch, you can turn it to four different positions.

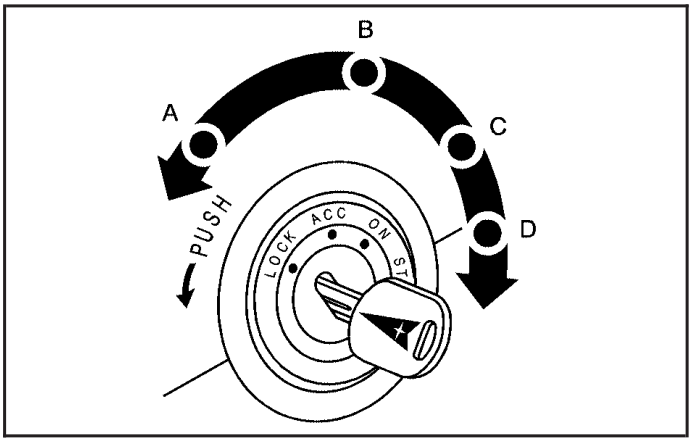

Notice: **If your key seems stuck in LOCK and you cannot turn it, be sure you are using the correct key; if so, is it all the way in? If it is, then turn the steering wheel left and right while you turn the key hard. Turn the key only with your hand. Using a tool to force it could break the key or the ignition switch. If none of these work, then your vehicle needs service.**

(A) LOCK: This is the only position from which you can remove the key. This locks your steering wheel, ignition and automatic transaxle. Push in the ignition switch as you turn the key toward you.

If you have an automatic transaxle, the ignition switch cannot be turned to LOCK unless the shift lever is in PARK (P).

⚠ CAUTION:

On manual transaxle vehicles, turning the key to LOCK and removing it will lock the steering column and result in a loss of ability to steer the vehicle. This could cause a collision. If you need to turn the engine off while the vehicle is moving, turn the key only to ACC. Do not push the key in while the vehicle is moving.

(B) ACC (ACCESSORY): This position operates some of your electrical accessories, such as the radio, but not the ventilation fan. It unlocks the steering wheel and ignition. To move the key from ACC to LOCK, push in the key and then turn it to LOCK.

Downloaded from www.Manualslib.com manuals search engine

(C) ON: This is the position the switch returns to after you start your engine and release the switch. The switch stays in the ON position when the engine is running. But even when the ignition is not running, you can use ON to operate your electrical accessories, including the ventilation fan and 115 volt power outlet, and to display some warning and indicator lights.

The battery could be drained if you leave the key in the ACC or On position with the engine off. You may not be able to start your vehicle if the battery is allowed to drain for an extended period of time.

(D) START: This position starts the engine. When the engine starts, release the key. The ignition switch will return to ON for normal driving.

When the engine is not running, ACC and ON allow you to operate some of your electrical accessories.

A warning tone will sound if you open the driver's door when the ignition is still in ACC or LOCK and the key is in the ignition.

Key In the Ignition

Never leave your vehicle with the keys inside, as it is an easy target for joy riders or thieves. If you leave the key in the ignition and park your vehicle, a chime will sound, when you open the driver's door. Always remember to remove your key from the ignition and take it with you. This will lock your ignition and transaxle. Also, always remember to lock the doors.

The battery could be drained if you leave the key in the ignition while your vehicle is parked. You may not be able to start your vehicle after it has been parked for an extended period of time.

Starting the Engine

Place the transaxle in the proper gear.

Downloaded from www.Manualslib.com manuals search engine

Automatic Transaxle

Move your shift lever to PARK (P) or NEUTRAL (N). Your engine will not start in any other position — this is a safety feature. To restart when you are already moving, use NEUTRAL (N) only.

Notice: **Shifting into PARK (P) with the vehicle moving could damage the transaxle. Shift into PARK (P) only when your vehicle is stopped.**

Manual Transaxle

The shift lever should be in the neutral position and the parking brake engaged. Hold the clutch pedal to the floor and start the engine. Your vehicle will not start if the clutch pedal is not all the way down. That is a safety feature.

Starting Procedure

1. With your foot off the accelerator pedal, turn the ignition key to START. When the engine starts, let go of the key. The idle speed will go down as your engine gets warm. Do not race the engine immediately after starting it. Operate the engine and transaxle gently to allow the oil to warm up and lubricate all moving parts.

   Your vehicle has a Computer-Controlled Cranking System. This feature assists in starting the engine and protects components. If the ignition key is turned to the START position, and then released when the engine begins cranking, the engine will continue cranking for a few seconds or until the vehicle starts. If the engine does not start and the key is held in START for many seconds, cranking will be stopped after 15 seconds to prevent cranking motor damage. To prevent gear damage, this system also prevents cranking if the engine is already running. Engine cranking can be stopped by turning the ignition switch to the ACC or LOCK position.

Notice: **Cranking the engine for long periods of time, by returning the key to the START position immediately after cranking has ended, can overheat and damage the cranking motor, and drain the battery. Wait at least 15 seconds between each try, to allow the cranking motor to cool down.**

Downloaded from www.Manualslib.com manuals search engine

2. If the engine does not start after 5-10 seconds, especially in very cold weather (below 0°F or –18°C), it could be flooded with too much gasoline. Try pushing the accelerator pedal all the way to the floor and holding it there as you hold the key in START for up to a maximum of 15 seconds. Wait at least 15 seconds between each try, to allow the cranking motor to cool down. When the engine starts, let go of the key and accelerator. If the vehicle starts briefly but then stops again, do the same thing. This clears the extra gasoline from the engine. Do not race the engine immediately after starting it. Operate the engine and transaxle gently until the oil warms up and lubricates all moving parts.

Notice: **Your engine is designed to work with the electronics in your vehicle. If you add electrical parts or accessories, you could change the way the engine operates. Before adding electrical equipment, check with your dealer. If you do not, your engine might not perform properly. Any resulting damage would not be covered by your vehicle's warranty.**

Engine Coolant Heater

Your vehicle may have an engine coolant heater. In very cold weather, 0°F (–18°C) or colder, the engine coolant heater can help. You will get easier starting and better fuel economy during engine warm-up. Usually, the coolant heater should be plugged in a minimum of four hours prior to starting your vehicle. At temperatures above 32°F (0°C), use of the coolant heater is not required.

Downloaded from www.Manualslib.com manuals search engine

To Use the Engine Coolant Heater

1. Turn off the engine.
2. Open the hood and unwrap the electrical cord. The electrical cord is located on the driver's side of the engine compartment.
3. Plug it into a normal, grounded 110-volt AC outlet.

⚠ CAUTION:

Plugging the cord into an ungrounded outlet could cause an electrical shock. Also, the wrong kind of extension cord could overheat and cause a fire. You could be seriously injured. Plug the cord into a properly grounded three-prong 110-volt AC outlet. If the cord will not reach, use a heavy-duty three-prong extension cord rated for at least 15 amps.

4. Before starting the engine, be sure to unplug and store the cord as it was before to keep it away from moving engine parts. If you do not, it could be damaged.

How long should you keep the coolant heater plugged in? The answer depends on the outside temperature, the kind of oil you have, and some other things. Instead of trying to list everything here, we ask that you contact your dealer in the area where you will be parking your vehicle. The dealer can give you the best advice for that particular area.

Downloaded from www.Manualslib.com manuals search engine

Automatic Transaxle Operation

P
R
N
D
2
L

There are several different positions for your shift lever.

PARK (P): This position locks your front wheels. It is the best position to use when you start your engine because your vehicle cannot move easily.

⚠ CAUTION:

It is dangerous to get out of your vehicle if the shift lever is not fully in PARK (P) with the parking brake firmly set. Your vehicle can roll.

CAUTION: (Continued)

CAUTION: (Continued)

Do not leave your vehicle when the engine is running unless you have to. If you have left the engine running, the vehicle can move suddenly. You or others could be injured. To be sure your vehicle will not move, even when you are on fairly level ground, always set your parking brake and move the shift lever to PARK (P). See *Shifting Into Park (P) (Automatic Transaxle) on page 115*. If you are pulling a trailer, see *Towing a Trailer on page 261*.

Make sure that the shift lever is fully in PARK (P) before starting the engine.

Downloaded from www.Manualslib.com manuals search engine

Your vehicle has an automatic transaxle shift lock control system. You have to fully apply your regular brakes first and then press the shift lever button before you can shift from PARK (P) when the ignition key is in ON. If you cannot shift out of PARK (P), ease pressure on the shift lever, push the shift lever all the way into PARK (P) and release the shift lever button as you maintain brake application. Then press the shift lever button and move the shift lever into the gear you wish. See *Shifting Out of Park (P) (Automatic Transaxle) on page 117*.

REVERSE (R): Use this gear to back up.

Notice: **Shifting to REVERSE (R) while your vehicle is moving forward could damage the transaxle. The repairs would not be covered by your warranty. Shift to REVERSE (R) only after your vehicle is stopped.**

To rock your vehicle back and forth to get out of snow, ice or sand without damaging your transaxle, see *If Your Vehicle is Stuck in Sand, Mud, Ice, or Snow on page 252*.

NEUTRAL (N): In this position, your engine does not connect with the wheels. To restart when you are already moving, use NEUTRAL (N) only.

⚠ CAUTION:

Shifting into a drive gear while your engine is running at high speed is dangerous. Unless your foot is firmly on the brake pedal, your vehicle could move very rapidly. You could lose control and hit people or objects. Do not shift into a drive gear while your engine is running at high speed.

Notice: **Shifting out of PARK (P) or NEUTRAL (N) while the engine is running at high speed may damage the transaxle. The repairs would not be covered by your warranty. Be sure the engine is not running at high speeds when shifting your vehicle.**

Downloaded from www.Manualslib.com manuals search engine

DRIVE (D): This position is for normal driving. It provides the best fuel economy for your vehicle. If you need more power for passing, and you are:

- Going less than about 27 mph (43 km/h), push your accelerator pedal about halfway down.
- Going about 29 mph (47 km/h) or more, push your accelerator pedal all the way down. You will shift down to the next gear and have more power.

  Downshifting the transaxle in slippery road conditions could result in skidding, see Skidding under *Loss of Control on page 237.*

SECOND (2): This position reduces vehicle speed more than DRIVE (D) without using your brakes. You can use SECOND (2) on hills. It can help control your speed as you go down steep mountain roads, but then you would also want to use your brakes off and on.

LOW (L): This position reduces vehicle speed even more than SECOND (2) without using your brakes. You can use it on very steep hills, or in deep snow or mud. If the shift lever is put in LOW (L), the transaxle will not shift into low gear until the vehicle is going slow enough.

Notice: **Spinning the tires or holding the vehicle in one place on a hill using only the accelerator pedal may damage the transaxle. If you are stuck, do not spin the tires. When stopping on a hill, use the brakes, or parking brake to hold the vehicle in place.**

Downloaded from www.Manualslib.com manuals search engine

Overdrive Off

Vehicles with an automatic transaxle have an O/D (overdrive off) button located on the left side of the shift lever.

When you turn on your vehicle overdrive will automatically come on until you turn it off.

Press the O/D button to turn overdrive off or on. A light on the instrument panel cluster comes on when the overdrive is on. See *Overdrive Off Light on page 174*.

Drive your vehicle with the overdrive on for better fuel economy and quieter driving.

Manual Transaxle Operation

Five-Speed Transaxle

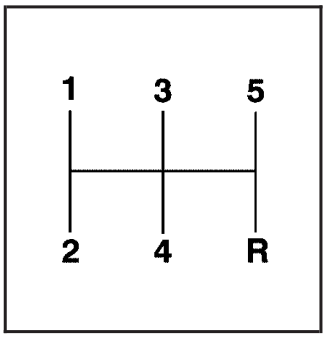

FIRST (1): Press the clutch pedal and shift into FIRST (1). Then, slowly let up on the clutch pedal as you press the accelerator pedal.

You can shift into FIRST (1) when you are going less than 20 mph (32 km/h). If you have come to a complete stop and it is hard to shift into FIRST (1), put the shift lever in NEUTRAL and let up on the clutch. Press the clutch pedal back down. Then shift into FIRST (1).

Downloaded from www.Manualslib.com manuals search engine

SECOND (2): Press the clutch pedal as you let up on the accelerator pedal and shift into SECOND (2). Then, slowly let up on the clutch pedal as you press the accelerator pedal.

THIRD (3), FOURTH (4), FIFTH (5): Shift into THIRD (3), FOURTH (4) and FIFTH (5) the same way you do for SECOND (2). Slowly let up on the clutch pedal as you press the accelerator pedal.

To stop, let up on the accelerator pedal and press the brake pedal. Just before the vehicle stops, press the clutch pedal and the brake pedal, and shift to NEUTRAL.

NEUTRAL: Use this position when you start or idle your engine.

REVERSE (R): To back up, press down on the clutch pedal and shift into REVERSE (R). Let up on the clutch pedal slowly while pressing the accelerator pedal.

Notice: **Shifting to REVERSE (R) while your vehicle is moving forward could damage the transaxle. The repairs would not be covered by your warranty. Shift to REVERSE (R) only after your vehicle is stopped.**

Also, use REVERSE (R) along with the parking brake for parking your vehicle.

Downloaded from www.Manualslib.com manuals search engine

Shift Speeds

⚠ CAUTION:

If you skip a gear when you downshift, you could lose control of your vehicle. You could injure yourself or others. Do not shift down more than one gear at a time when you downshift.

This chart shows when to shift to the next gear for the best fuel economy.

Manual Transaxle Recommended Shift Speeds

Engine	1 to 2 or 2 to 1	2 to 3 or 3 to 2	3 to 4 or 4 to 3	4 to 5 or 5 to 4	5 to 6 or 6 to 5
1.8 L (Code 8)	15 mph 24 km/h	25 mph 40 km/h	40 mph 64 km/h	45 mph 72 km/h	—

If your speed drops below 20 mph (32 km/h), or if the engine is not running smoothly, you should downshift to the next lower gear. You may have to downshift two or more gears to keep the engine running smoothly or for good performance.

Downloaded from www.Manualslib.com manuals search engine

Parking Brake

To set the parking brake, hold the brake pedal down and pull up on the parking brake lever. If the ignition is on, the brake system warning light will come on.

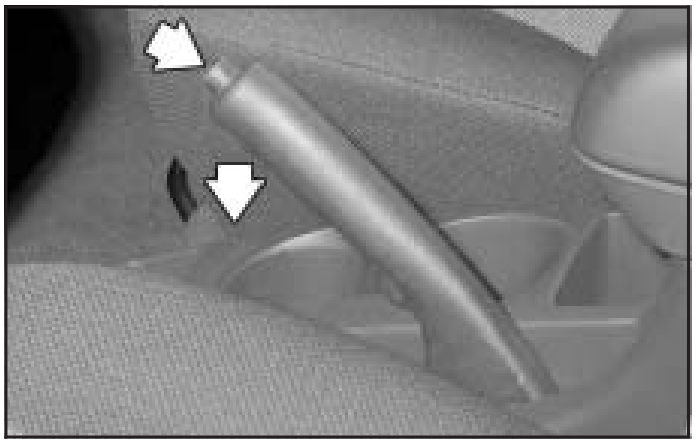

To release the parking brake, hold the brake pedal down.

Pull the parking brake lever up until you can press the release button. Hold the release button in as you move the lever all the way down.

Notice: **Driving with the parking brake on can overheat the brake system and cause premature wear or damage to brake system parts. Verify that the parking brake is fully released and the brake warning light is off before driving.**

If you are towing a trailer, see *Towing a Trailer on page 261*.

Downloaded from www.Manualslib.com manuals search engine

Shifting Into Park (P) (Automatic Transaxle)

⚠ CAUTION:

It can be dangerous to get out of your vehicle if the shift lever is not fully in PARK (P) with the parking brake firmly set. Your vehicle can roll. If you have left the engine running, the vehicle can move suddenly. You or others could be injured. To be sure your vehicle will not move, even when you are on fairly level ground, use the steps that follow. If you are pulling a trailer, see *Towing a Trailer on page 261*.

To shift into PARK (P), do the following:

1. Hold the brake pedal down with your right foot and set the parking brake by pulling up on the parking brake lever.
2. Move the shift lever into PARK (P) by holding in the button on the shift lever and pushing the lever all the way toward the front of the vehicle.
3. Turn the ignition key to LOCK.
4. Remove the key and take it with you. If you can leave your vehicle with the key in your hand, your vehicle is in PARK (P).

Downloaded from www.Manualslib.com manuals search engine

Leaving Your Vehicle With the Engine Running (Automatic Transaxle)

⚠ CAUTION:

It can be dangerous to leave your vehicle with the engine running. Your vehicle could move suddenly if the shift lever is not fully in PARK (P) with the parking brake firmly set. And, if you leave the vehicle with the engine running, it could overheat and even catch fire. You or others could be injured. Do not leave your vehicle with the engine running.

If you have to leave your automatic transaxle vehicle with the engine running, be sure your vehicle is in PARK (P) and your parking brake is firmly set before you leave it. After you have moved the shift lever into PARK (P), hold the regular brake pedal down. Then, see if you can move the shift lever away from PARK (P) without first pulling it toward you. If you can, it means that the shift lever was not fully locked into PARK (P).

Torque Lock (Automatic Transaxle)

If you are parking on a hill and you do not shift into PARK (P) properly, the weight of the vehicle may put too much force on the parking pawl in the transaxle. You may find it difficult to pull the shift lever out of PARK (P). This is called “torque lock.” To prevent torque lock, set the parking brake and then shift into PARK (P) properly before you leave the driver’s seat. To find out how, see *Shifting Into Park (P) (Automatic Transaxle) on page 115*.

When you are ready to drive, move the shift lever out of PARK (P) before you release the parking brake.

If torque lock does occur, you may need to have another vehicle push yours a little uphill to take some of the pressure from the parking pawl in the transaxle, so you can pull the shift lever out of PARK (P).

Downloaded from www.Manualslib.com manuals search engine

Shifting Out of Park (P) (Automatic Transaxle)

Your vehicle has an automatic transaxle shift lock control system. You have to fully apply your regular brakes before you can shift from PARK (P) when the ignition is in ON. See *Automatic Transaxle Operation on page 108*.

If you cannot shift out of PARK (P), ease pressure on the shift lever – push the shift lever all the way into PARK (P) and release the shift lever button as you maintain brake application. Then press the shift lever button and move the shift lever into the gear you wish.

Shift Lock Release

If you ever hold the brake pedal down but still cannot shift out of PARK (P), try this:

1. Turn the ignition to LOCK. Make sure the parking brake is applied.

2. Carefully pry the cover from the shift lock override, located to the right of the shift lever.
3. Insert the end of a flat-tipped tool into the round slot and press down firmly.
4. While maintaining brake application, move the shift lever into the drive gear you want.
5. Have the vehicle fixed as soon as possible.

Downloaded from www.Manualslib.com manuals search engine

Parking Your Vehicle (Manual Transaxle)

Before you get out of your vehicle, move the shift lever into REVERSE (R), and firmly apply the parking brake. Once the shift lever has been placed into REVERSE (R) with the clutch pedal pressed in, you can turn the ignition key to LOCK, remove the key and release the clutch.

If you are parking on a hill, or if your vehicle is pulling a trailer, see *Towing a Trailer on page 261*.

Evaporation Pump

Your vehicle is equipped with a vacuum pump for the vehicle's fuel evaporation system. This pump performs a fuel evaporation leakage test approximately five hours after the engine is turned off. You may hear a sound coming from underneath the rear cargo compartment for several minutes.

The noise is normal and does not signify a malfunction. See your dealer with any questions.

Parking Over Things That Burn

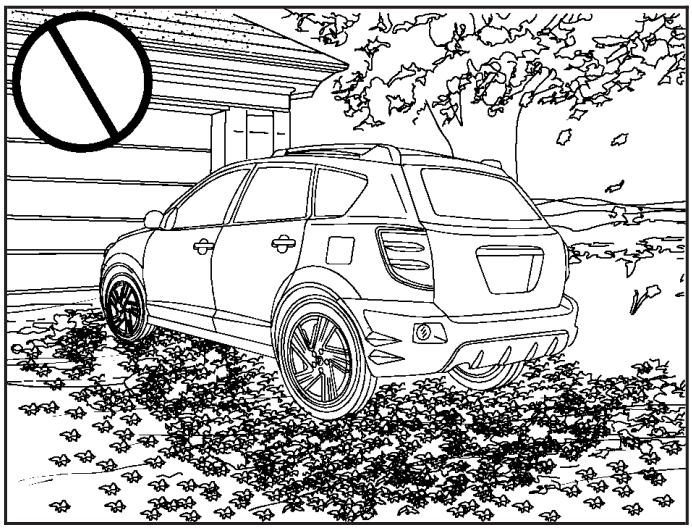

⚠ CAUTION:

Things that can burn could touch hot exhaust parts under your vehicle and ignite. Do not park over papers, leaves, dry grass, or other things that can burn.

Downloaded from www.Manualslib.com manuals search engine

Engine Exhaust

⚠ CAUTION:

Engine exhaust can kill. It contains the gas carbon monoxide (CO), which you cannot see or smell. It can cause unconsciousness and death.

You might have exhaust coming in if:

- **The exhaust system sounds strange or different.**
- **Your vehicle gets rusty underneath.**
- **Your vehicle was damaged in a collision.**
- **Your vehicle was damaged when driving over high points on the road or over road debris.**

CAUTION: (Continued)

CAUTION: (Continued)

- **Repairs were not done correctly.**
- **Your vehicle or the exhaust system has been modified improperly.**

If you ever suspect exhaust is coming into your vehicle:

- **Drive it only with all the windows down to blow out any CO; and**
- **Have your vehicle fixed immediately.**

Downloaded from www.Manualslib.com manuals search engine

Running the Engine While Parked

It is better not to park with the engine running. But if you ever have to, here are some things to know.

⚠ CAUTION:

Idling the engine with the climate control system off could allow dangerous exhaust into your vehicle. See the earlier caution under *Engine Exhaust on page 119*.

Also, idling in a closed-in place can let deadly carbon monoxide (CO) into your vehicle even if the climate control fan is at the highest setting. One place this can happen is a garage. Exhaust — with CO — can come in easily. NEVER park in a garage with the engine running.

Another closed-in place can be a blizzard. See *Winter Driving on page 248*.

⚠ CAUTION:

It can be dangerous to get out of your vehicle if the shift lever is not fully in PARK (P) with the parking brake firmly set. Your vehicle can roll. Do not leave your vehicle when the engine is running unless you have to. If you have left the engine running, the vehicle can move suddenly. You or others could be injured. To be sure your vehicle will not move, even when you are on fairly level ground, always set your parking brake and move the shift lever to PARK (P).

Follow the proper steps to be sure your vehicle will not move. See *Shifting Into Park (P) (Automatic Transaxle) on page 115*.

If you are parking on a hill and if you are pulling a trailer, also see *Towing a Trailer on page 261*.

Downloaded from www.Manualslib.com manuals search engine

Mirrors

Manual Rearview Mirror

While sitting in a comfortable driving position, adjust the mirror so you can see clearly behind your vehicle. Move the mirror in the center to move it up or down and side to side.

The control at the bottom of the mirror is the day/night feature that allows adjustment to the mirror so that the glare of headlamps from behind is reduced. Pull the control for night driving to reduce glare; push it to return to the day position.

The mirror may have map lights beneath the mirror. Press the switch to turn each light on or off.

Manual Rearview Mirror with OnStar®

The vehicle may have an inside rearview mirror with OnStar®. See your dealer for more information on the system and how to subscribe to OnStar®. See *OnStar® System on page 123* for information on the services OnStar® provides.

While sitting in a comfortable position, adjust the mirror so you can see clearly behind your vehicle. Move the mirror in the center to move it up or down and side to side. The control at the bottom of the mirror is the day/night feature that allows adjustment to the mirror so that the glare of headlamps from behind is reduced. Move the control from left to right for day or night conditions.

Downloaded from www.Manualslib.com manuals search engine

Automatic Dimming Rearview Mirror

While sitting in a comfortable driving position, adjust the mirror so you can see clearly behind your vehicle. Hold the mirror in the center to move it up or down and side to side.

The mirror may have an automatic dimming feature that darkens gradually to reduce the glare of headlamps from behind. When the ignition key is inserted and turned on, the inside rear view mirror always turns on in the automatic function mode. An indicator light located on the mirror will come on to show you that the function is on. When the inside air temperature is low, it may take a little longer for the mirror to darken in response to the detection of headlights. Press the button in the center of the mirror to turn this feature on or off.

One photocell on the front of the mirror senses when it is becoming dark outside. Another photocell, facing rearward, senses headlamps behind you.

To keep the photocells operating well, occasionally clean them with a cotton swab and glass cleaner.

Outside Remote Control Mirrors

Your vehicle has outside power adjustable mirrors.

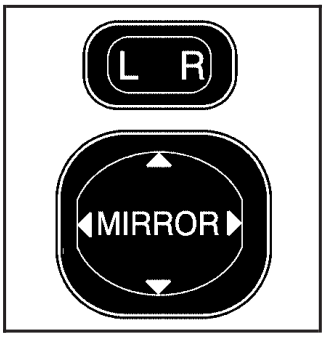

The controls are located to the left of the steering wheel on the instrument panel.

To adjust either mirror, push the button labeled L (left) or R (right). Use the arrows on the control pad to adjust the direction of the mirror. Once both mirrors have been adjusted, move the selector switch back to the center. This prevents the mirrors from being moved once they have been adjusted.

Downloaded from www.Manualslib.com manuals search engine

Outside Convex Mirror

⚠ CAUTION:

A convex mirror can make things (like other vehicles) look farther away than they really are. If you cut too sharply into the right lane, you could hit a vehicle on your right. Check your inside mirror or glance over your shoulder before changing lanes.

The passenger's side mirror is convex. A convex mirror's surface is curved so more can be seen from the driver's seat.

OnStar® System

OnStar® uses several innovative technologies and live advisors to provide you with a wide range of safety, security, information, and convenience services. If your airbags deploy, the system is designed to make an automatic call to OnStar® Emergency advisors who can request emergency services be sent to your location. If you lock your keys in the vehicle, call OnStar® at 1-888-4-ONSTAR and they can send a signal to unlock your doors. If you need roadside assistance, press the OnStar® button and they can contact Roadside Service for you.

Downloaded from www.Manualslib.com manuals search engine

OnStar® service is provided to you subject to the OnStar® Terms and Conditions. You may cancel your OnStar® service at any time by contacting OnStar® as provided below. A complete OnStar® Owner's Guide and the OnStar® Terms and Conditions are included in the vehicle's OnStar® Subscriber glove box literature. For more information, visit onstar.com or onstar.ca, contact OnStar® at 1-888-4-ONSTAR (1-888-466-7827) or TTY 1-877-248-2080, or press the OnStar® button to speak with an OnStar® advisor 24 hours a day, 7 days a week.

Not all OnStar® features are available on all vehicles. To check if your vehicle is equipped to provide the services described below, or for a full description of OnStar® services and system limitations, see the OnStar® Owner's Guide in your glove box or visit onstar.com.

OnStar® Services

For new vehicles equipped with OnStar®, the Safe & Sound Plan, or the Directions & Connections® Plan is included for one year from the date of purchase. You can extend this plan beyond the first year, or upgrade to the Directions & Connections® Plan.

For more information, press the OnStar® button to speak with an advisor. Some OnStar® services (such as Remote Door Unlock or Stolen Vehicle Location Assistance) may not be available until you register with OnStar®.

Available Services with Safe & Sound® Plan

- Automatic Notification of Airbag Deployment
- Advanced Automatic Crash Notification (AACN) (If equipped)
- Link to Emergency Services
- Roadside Assistance
- Stolen Vehicle Location Assistance
- AccidentAssist
- Remote Door Unlock/Vehicle Alert
- OnStar® Vehicle Diagnostics
- GM® Goodwrench® On Demand Diagnostics
- OnStar® Hands-Free Calling with 30 complimentary minutes
- OnStar® Virtual Advisor (U.S. Only)

Downloaded from www.Manualslib.com manuals search engine

Available Services included with Directions & Connections® Plan

- All Safe and Sound Plan Services
- Driving Directions - Advisor delivered or OnStar® Turn-by-Turn Navigation (If equipped)
- RideAssist
- Information and Convenience Services

OnStar® Hands-Free Calling

OnStar® Hands-Free Calling allows eligible OnStar® subscribers to make and receive calls using voice commands. Hands-Free Calling is fully integrated into the vehicle, and can be used with OnStar® Pre-Paid Minute Packages. Hands-Free Calling may also be linked to a Verizon Wireless service plan in the U.S. or a Bell Mobility service plan in Canada, depending on eligibility. To find out more, refer to the OnStar® Owner's Guide in the vehicle's glove box, visit www.onstar.com or www.onstar.ca, or speak with an OnStar® advisor by pressing the OnStar® button or calling 1-888-4-ONSTAR (1-888-466-7827).

OnStar® Virtual Advisor

OnStar® Virtual Advisor is a feature of OnStar® Hands-Free Calling that uses your minutes to access location-based weather, local traffic reports, and stock quotes. By pressing the phone button and giving a few simple voice commands, you can browse through the various topics. See the OnStar® Owner's Guide for more information. (Only available in the continental U.S.)

OnStar® Steering Wheel Controls

Your vehicle may be equipped with a Talk/Mute button that can be used to interact with OnStar® Hands-Free Calling.

On some vehicles, you may have to hold the button for a few seconds and give the command "ONSTAR" in order to activate the OnStar® Hands-Free Calling feature.

On some vehicles, the mute button can be used to dial numbers into voicemail systems, or to dial phone extensions. See the OnStar® Owner's Guide for more information.

Downloaded from www.Manualslib.com manuals search engine

How OnStar® Service Works

In order to provide you with OnStar® services, your vehicle's OnStar® system has the capability of recording and transmitting vehicle information. This information is automatically sent to an OnStar® Call Center at the time of an OnStar® button press, Emergency button press or if your airbags or AACN system deploys. The vehicle information usually includes your GPS location and, in the event of a crash, additional information regarding the accident that your vehicle has been involved in (e.g. the direction from which your vehicle was hit). When you use the Virtual Advisor feature of OnStar® Hands-Free Calling, your vehicle also sends OnStar® your GPS location so that we can provide you with location-based services.

OnStar® service cannot work unless your vehicle is in a place where OnStar® has an agreement with a wireless service provider for service in that area. OnStar® service also cannot work unless you are in a place where the wireless service provider OnStar® has hired for that area has coverage, network capacity and reception when the service is needed, and technology that is compatible with the OnStar® service.

Not all services are available everywhere, particularly in remote or enclosed areas, or at all times.

OnStar® service that involves location information about your vehicle cannot work unless GPS satellite signals are unobstructed and available in that place as well.

Your vehicle must have a working electrical system (including adequate battery power) for the OnStar® equipment to operate. There are other problems OnStar® cannot control that may prevent OnStar® from providing OnStar® service to you at any particular time or place. Some examples are damage to important parts of your vehicle in an accident, hills, tall buildings, tunnels, weather or wireless phone network congestion.

Your Responsibility

You may need to increase the volume of your radio to hear the OnStar® advisor. If the light next to the OnStar® buttons is red, this means that your system is not functioning properly and should be checked by a dealer. If the light appears clear (no light is appearing), your OnStar® subscription has expired. You can always press the blue OnStar® button to confirm that your OnStar® equipment is active.

Downloaded from www.Manualslib.com manuals search engine

Storage Areas

Glove Box

Open the glove box by pulling up on the bottom of the handle.

Cupholder(s)

There are two fixed cupholders located in the console area between the two front seats. There are also two cupholders that fold out of the rear of the console storage unit.

Coinholder(s)

Your instrument panel may have a coinholder located to the left of the steering wheel and on the center console near the parking brake.

Instrument Panel Storage Area

There are storage compartments located on the instrument panel in two places. They are below the interior/instrument panel brightness dial and below the shift lever. Pull the top of the door toward you to open it or for the compartment below the shift lever, push the button to open it.

Center Console Storage Area

A storage area is located in the console between the seats.

To access the storage area, pull up the lock release lever while raising the lid.

Floor Mats

The driver's side floor mat is held in place by two locator hooks.

Be sure the driver's side floor mat is properly placed on the floor so that it does not block the movement of the accelerator pedal.

Downloaded from www.Manualslib.com manuals search engine

How to Remove and Replace the Floor Mat

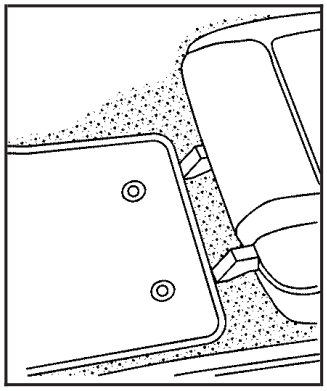

To remove the floor mat, pull up on the rear of the mat to disconnect it from the locator hooks.

To reinstall the floor mat, line up the openings in the floor mat over the locator hooks and push down into place.

Rear Storage Area

A storage area is located under the rear cargo area floor panel.

Turn the knobs on the floor panel to unlock the storage area access cover.

Be sure to lock the access cover to close it securely.

Downloaded from www.Manualslib.com manuals search engine

Rear Cargo Accessory Track System

Your vehicle has a track system located on the floor of the rear cargo area. This system can be used to carry accessories in your vehicle in many ways by using the tie-down anchors provided in your vehicle or accessory packages available from your GM dealer.

Make sure the cargo being carried in the rear cargo area is secure. See *Loading Your Vehicle on page 253*.

Cargo Cover

To use the cargo cover, loosen the straps and attach the side hooks of the cargo cover to the upper tie down hooks located along both sides of the rear cargo area. Pull straps to adjust.

⚠ CAUTION:

An improperly stored cargo cover could be thrown about the vehicle during a collision or sudden maneuver. You or others could be injured. If you remove the cover, always store it in the proper storage location. When you put it back, always be sure that it is securely reattached.

Downloaded from www.Manualslib.com manuals search engine

Cargo Tie Downs

The tire tie-down straps are designed to secure a flat tire. You can also use the straps and hooks to secure your luggage.

There are eight tie-down hooks located in the rear of the vehicle. The straps are located under the cargo area floor panel. To use the straps, hook the ends to the lower tie-down hooks in a criss-cross pattern across the cargo. Pull on the straps at the buckle to tighten the straps as needed.

Downloaded from www.Manualslib.com manuals search engine

Sunroof

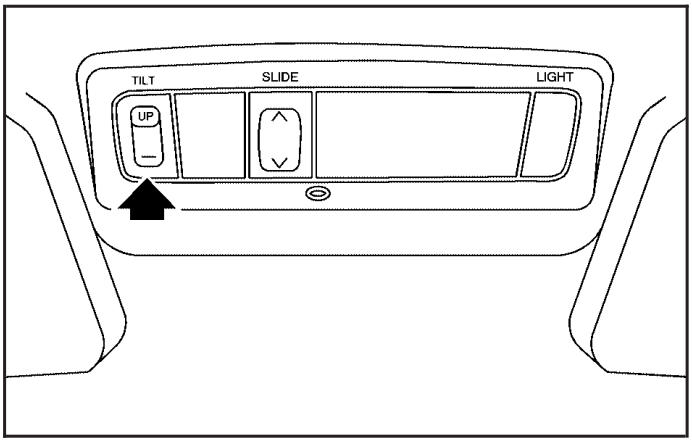

If the vehicle has a sunroof, it can be opened or put in a tilt position. To tilt the sunroof, slide the sunshade rearward, then press the switch marked UP. Press the other end of the switch to lower the sunroof. The ignition must be in the ON position for the switch to work.

To open or close the sunroof, press the switch marked SLIDE rearward or forward. The sunroof will close partially and stop. Once the sunroof stops, release the switch and press the button again to fully close it. The sunroof can be opened to any position. The sunshade will open when the sunroof is opened. The sunshade must be closed manually.

Downloaded from www.Manualslib.com manuals search engine

NOTES

Downloaded from www.Manualslib.com manuals search engine

Section 3 Instrument Panel

Instrument Panel Overview 136
Hazard Warning Flashers 138
Other Warning Devices 138
Horn 138
Tilt Wheel 139
Turn Signal/Multifunction Lever 139
Turn and Lane-Change Signals 140
Headlamp High/Low-Beam Changer 140
Flash-to-Pass 141
Windshield Wipers 141
Windshield Washer 142
Rear Window Wiper/Washer 142
Cruise Control 143
Exterior Lamps 146
Headlamps on Reminder 146
Daytime Running Lamps (DRL) 147
Automatic Headlamp System 147
Fog Lamps 148
Instrument Panel Brightness 148
Interior Lamps Control 149
Entry Lighting 149
Reading Lamps 150
Accessory Power Outlet(s) 150
Power Outlet 115 Volt Alternating Current 151
Ashtray(s) and Cigarette Lighter 151

Climate Controls 152
Climate Control System 152
Outlet Adjustment 155
Passenger Compartment Air Filter 156

Warning Lights, Gages, and Indicators 158
Instrument Panel Cluster 159
Speedometer and Odometer 160
Trip Odometers 160
Tachometer 161
Safety Belt Reminder Light 161
Airbag Readiness Light 162
Passenger Airbag Status Indicator 163
Charging System Light 165
Brake System Warning Light 166
Anti-Lock Brake System Warning Light 167
Low Tire Pressure Warning Light 167
Traction Control System (TCS) Warning Light 168
StabiliTrak® Indicator Light 168

Downloaded from www.Manualslib.com manuals search engine

Section 3 Instrument Panel

Engine Coolant Temperature Gage 169
Malfunction Indicator Lamp 170
Oil Pressure Light 173
Lights On Reminder 174
Taillamp Indicator Light 174
Cruise Control Light 174
Overdrive Off Light 174
Highbeam On Light 175
Low Washer Fluid Warning Light 175
Door Ajar Light 175
Fuel Gage 176
Low Fuel Warning Light 177

Audio System(s) 177
Setting the Time 178
Radio with CD (Base Level) 179
Radio with CD (MP3) 188
Radio with Six-Disc CD 198
Using an MP3 210
XM Radio Messages 216
Radio Reception 218
Care of Your CDs 219
Care of the CD Player 219
Fixed Mast Antenna 219
XM™ Satellite Radio Antenna System 219

Downloaded from www.Manualslib.com manuals search engine

✍ NOTES

Downloaded from www.Manualslib.com manuals search engine

Instrument Panel Overview

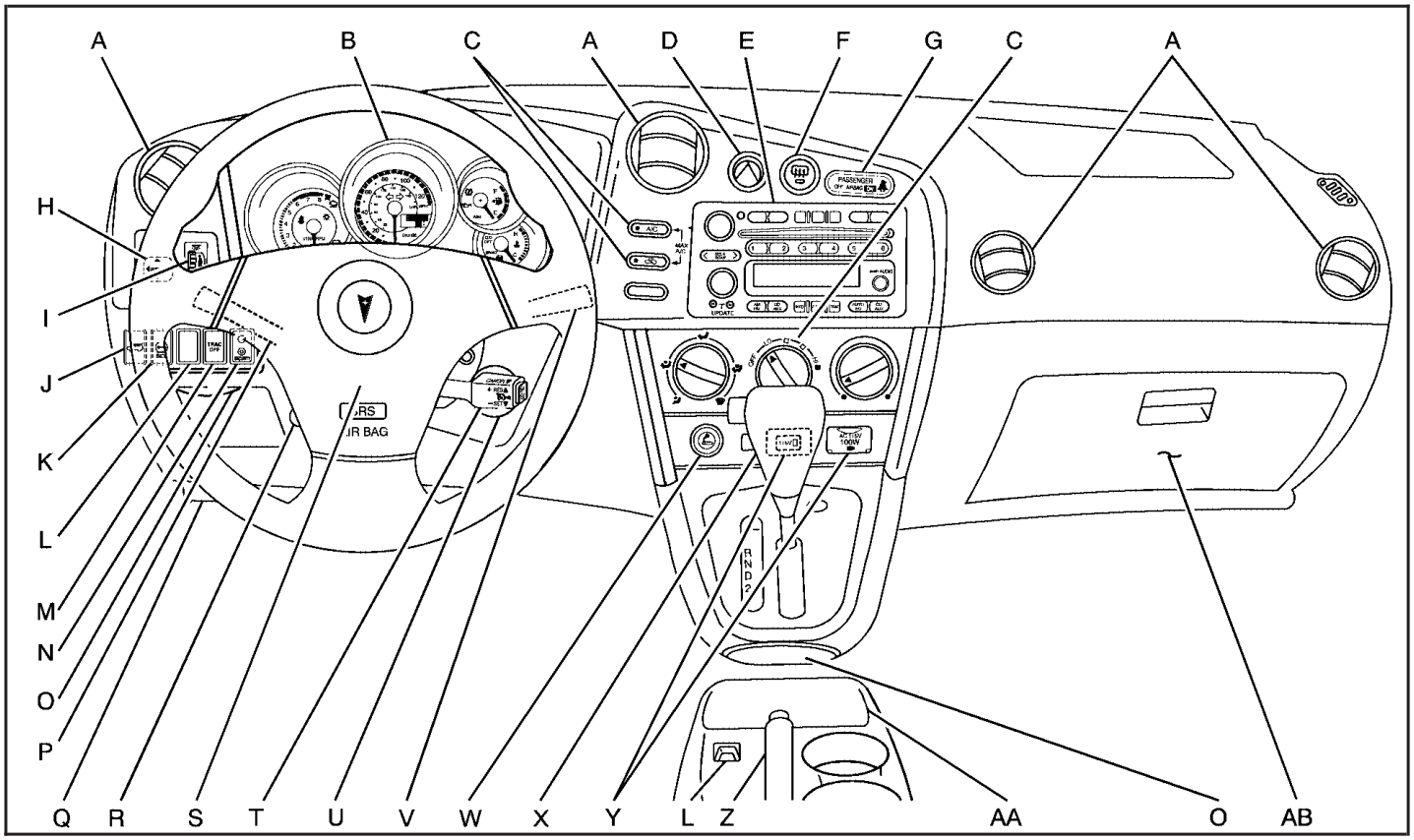

Downloaded from www.Manualslib.com manuals search engine

The main components of your instrument panel are the following:

A. Air Outlets. See *Outlet Adjustment on page 155*.

B. Instrument Panel Cluster. See *Instrument Panel Cluster on page 159*.

C. Climate Control System. See *Climate Control System on page 152*.

D. Hazard Warning Flasher Button. See *Hazard Warning Flashers on page 138*.

E. Audio System. See *Audio System(s) on page 177*.

F. Rear Window Defogger Button. See "Rear Window Defogger" under *Climate Control System on page 152*.

G. Passenger Airbag Status Indicator. See *Passenger Airbag Status Indicator on page 163*. Front Passenger Safety Belt Reminder Light. See *Safety Belt Reminder Light on page 161*.

H. Power Remote Control Mirror Button. See *Outside Remote Control Mirrors on page 122*.

I. Instrument Panel Brightness Control. See *Instrument Panel Brightness on page 148*.

J. Rear Liftglass Release Button. See *Liftgate/Liftglass on page 96*.

K. Tire Pressure Monitor Reset Button. See *Tire Pressure Monitor System on page 330*.

L. Coinholder. See *Coinholder(s) on page 127*.

M. TRAC OFF Button. See *Traction Control System (TCS) on page 230*.

N. Content Theft-Deterrent Security Light. See *Content Theft-Deterrent on page 100*.

O. Storage Compartment. See *Instrument Panel Storage Area on page 127*.

P. Turn Signal/Multifunction Lever and Exterior Lamp Stalk. See *Turn Signal/Multifunction Lever on page 139* and *Exterior Lamps on page 146*.

Q. Hood Release. See *Hood Release on page 280*.

R. Tilt Lever. See *Tilt Wheel on page 139*.

S. Horn. See *Horn on page 138*.

T. Cruise Control Lever (Option). See *Cruise Control on page 143*.

U. Ignition Switch. See *Ignition Positions on page 103*.

Downloaded from www.Manualslib.com manuals search engine

V. Windshield Wiper Lever. See *Windshield Wipers on page 141*.

W. Cigarette Lighter or Accessory Power Outlet. See *Ashtray(s) and Cigarette Lighter on page 151* or *Accessory Power Outlet(s) on page 150*.

X. Shift Lever. See *Automatic Transaxle Operation on page 108* or *Manual Transaxle Operation on page 111*.

Y. Power Outlet. See *Power Outlet 115 Volt Alternating Current on page 151*.

Z. Parking Brake. See *Parking Brake on page 114*.

AA. Center Console Storage Area. See *Center Console Storage Area on page 127*.

AB. Glove Box. See *Glove Box on page 127*.

Hazard Warning Flashers

The hazard warning flashers let you warn the police and others that you have a problem. The front and rear turn signal lamps will flash on and off.

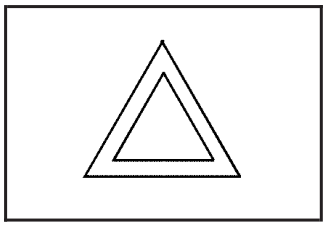

The hazard warning flasher button is located in the center of the instrument panel.

The hazard warning flashers work no matter what position the key is in, and even if the key is not in the ignition switch.

Press the button to make the front and rear turn signal lamps flash on and off. Press the button again to turn the flashers off.

While the hazard warning flashers are on, the turn signals do not work.

Other Warning Devices

If you carry reflective triangles, you can set them up at the side of the road about 300 feet (100 m) behind your vehicle.

Horn

Press near or on the horn symbols on your steering wheel pad to sound the horn.

Downloaded from www.Manualslib.com manuals search engine

Tilt Wheel

A tilt steering column allows you to adjust the steering column before you drive. You can also raise it to the highest level to give your legs more room when you exit and enter the vehicle.

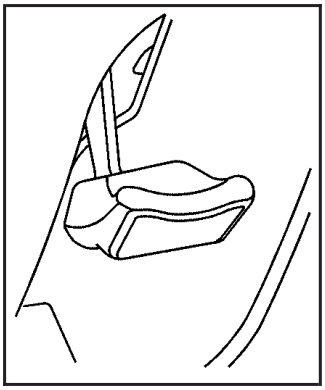

The tilt lever is located underneath, on the left side of the steering wheel column.

To tilt the column, move the lever downward. Adjust the steering wheel to a comfortable position, then move the lever upward to lock the column in place.

Turn Signal/Multifunction Lever

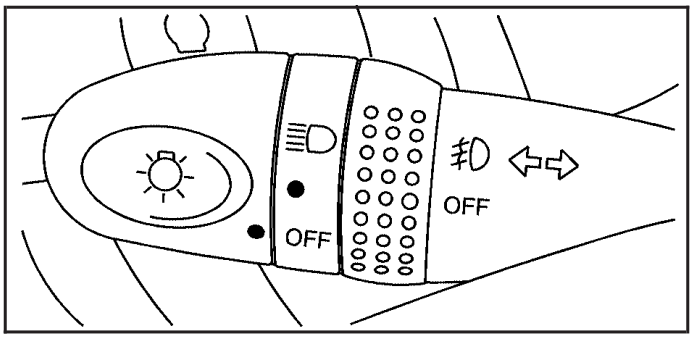

The turn signal/multifunction lever is located on the left side of the steering column.

This lever operates the following:

- Exterior Lamps. See *Exterior Lamps on page 146*.
- Turn and Lane-Change Signals. See *Turn and Lane-Change Signals on page 140*.
- Headlamp High/Low-Beam Changer. See *Headlamp High/Low-Beam Changer on page 140*.
- Flash-to-Pass. See *Flash-to-Pass on page 141*.
- Fog Lamps. See *Fog Lamps on page 148*.

Downloaded from www.Manualslib.com manuals search engine

Turn and Lane-Change Signals

The turn signal has an upward (for right) and a downward (for left) position. These positions allow you to signal a turn or a lane change.

To signal a turn, move the lever all the way up or down. When the turn is finished, the lever will return automatically.

To signal a lane change, raise or lower the lever until the arrow starts to flash. Hold it there until you complete your lane change. The lever will return by itself when you release it.

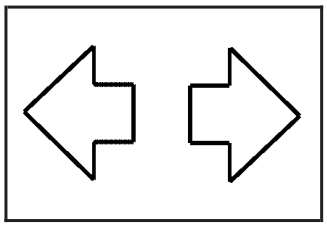

An arrow on the instrument panel cluster will flash in the direction of the turn or lane change.

If you signal a turn or a lane change and notice the arrow flashing rapidly, a signal bulb may be burned out and other drivers will not see your turn signal.

If a bulb is burned out, have it replaced to help avoid an accident. If the arrows do not go on at all when you signal a turn, check for burned-out bulbs and then check the fuse. See *Fuses and Circuit Breakers on page 365*.

Headlamp High/Low-Beam Changer

The headlamps must be on for this feature to work. For high beams, push the turn signal lever away from you.

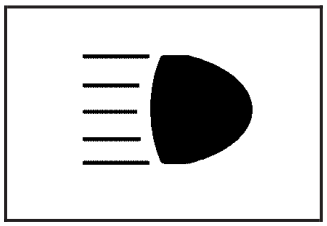

When the high beams are on, this light on the instrument panel cluster also will be on.

It will go off when you switch to the low beams. To switch back to low beams, pull the lever toward you.

Downloaded from www.Manualslib.com manuals search engine

Flash-to-Pass

With the lever in the low-beam position, pull the lever toward you to momentarily switch to high beams (to signal that you are going to pass). If you have the headlamps on when you release the lever, they will return to the low beams.

Windshield Wipers

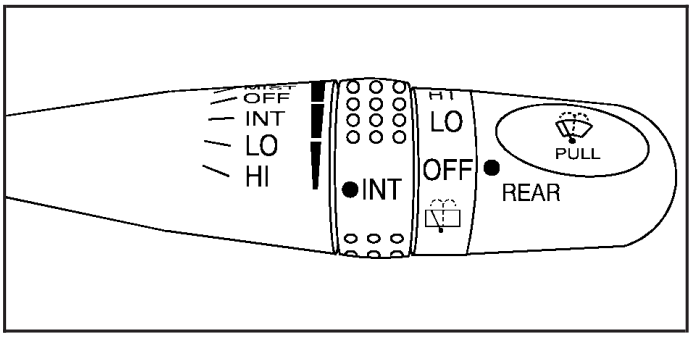

The lever on the right side of the steering column controls the windshield wipers and washer.

Move the lever to one of the following positions:

MIST: Move the lever to MIST, for a single wiping cycle. Hold it there until the wipers start, then let go. The wipers will stop after one wipe.

OFF: Move the lever to this position to turn the wipers off.

INT (Intermittent): Move the lever to INT to choose a delayed wiping cycle. The time between wipes can be changed by turning the INT band. Turn the band forward or rearward for a longer or shorter delay interval. This position is useful in light rain or snow, rather than continuous wiping.

LO (Low): Move the lever to LO for steady wiping at low speed.

HI (High): Move the lever to HI for steady wiping at high speed.

REAR: Turn the end of the lever upward to LO or HI, to turn on the rear window wiper. The wiper does not work with the rear liftglass open.

Downloaded from www.Manualslib.com manuals search engine

Be sure to clear ice and snow from the wiper blades before using them. If they are frozen to the windshield, carefully loosen or thaw them. If the blades become damaged, get new blades or blade inserts.

Heavy snow or ice can overload the wipers. A circuit breaker stops them until the motor cools. Clear away snow or ice to prevent an overload.

Windshield Washer

Pull the lever toward you to spray washer fluid on the windshield. The spray will continue until you release the lever. The wipers will run a few times. See *Windshield Washer Fluid on page 305*.

The knob automatically returns from the position after you release it.

⚠ CAUTION:

In freezing weather, do not use your washer until the windshield is warmed. Otherwise the washer fluid can form ice on the windshield, blocking your vision.

Rear Window Wiper/Washer

Turn the knob up or down as far as it will go, to squirt washer fluid on the rear window. The knob automatically returns from these positions after it is released.

The rear window washer uses the same fluid bottle as the windshield washer. However, the rear window washer will run out of fluid before the windshield washer. If you can wash the windshield but not the rear window, check the fluid level.

⚠ CAUTION:

In freezing weather, do not use your washer until the windshield is warmed. Otherwise the washer fluid can form ice on the windshield, blocking your vision.

Downloaded from www.Manualslib.com manuals search engine

Cruise Control

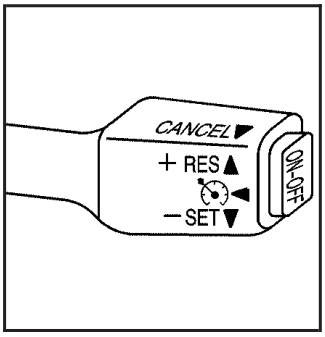

If your vehicle has cruise control, the lever is located on the right side of the steering wheel.

Cruise control, lets you maintain a speed of 25 mph (40 km/h) or more without keeping your foot on the accelerator. This can really help on long trips. Cruise control does not work at speeds below 25 mph (40 km/h).

⚠ CAUTION:

Cruise control can be dangerous where you cannot drive safely at a steady speed. So, do not use your cruise control on winding roads or in heavy traffic.

Cruise control can be dangerous on slippery roads. On such roads, fast changes in tire traction can cause excessive wheel slip, and you could lose control. Do not use cruise control on slippery roads.

Downloaded from www.Manualslib.com manuals search engine

Setting Cruise Control

⚠ CAUTION:

If you leave your cruise control on when you are not using cruise, you might hit a button and go into cruise when you do not want to. You could be startled and even lose control. Keep the cruise control switch off until you want to use cruise control.

1. Press the ON-OFF button at the end of the cruise control lever. The CRUISE light on the instrument panel cluster comes on. See *Cruise Control Light on page 174* for more information.
2. Get up to the desired speed.
3. Move the lever down to –SET and release it.
4. Take your foot off the accelerator pedal.

Resuming a Set Speed

Suppose the cruise control is set at a desired speed and then you apply the brake. This shuts off cruise control. But you do not need to reset it.

If the vehicle speed is 25 mph (40 km/h) or greater, push the lever up to +RES (Resume/Accelerate). The vehicle returns to the previously set speed and stays there.

Increasing Speed While Using Cruise Control

There are three ways to go to a higher speed:

- Use the accelerator pedal to get to the higher speed. Move the lever down to –SET. Release the lever and the accelerator pedal. You will now cruise at the higher speed.
- Move the cruise lever up to +RES. Hold it there until you get up to the speed desired, and then release the lever.
- To increase the vehicle speed in very small amounts, move the lever to +RES briefly and then release it. Each time this is done, the vehicle goes about 1 mph (1.6 km/h) faster.

Downloaded from www.Manualslib.com manuals search engine

Reducing Speed While Using Cruise Control

There are two ways to reduce your speed while using cruise control:

- Push and hold the lever to –SET until you reach the lower speed desired, then release it.
- To slow down in very small amounts, push the lever down briefly. Each time this is done, the vehicle will go about 1 mph (1.6 km/h) slower.

Passing Another Vehicle While Using Cruise Control

Use the accelerator pedal to increase the vehicle speed. When you take your foot off the pedal, the vehicle slows down to the cruise control speed you set earlier.

Using Cruise Control on Hills

How well the cruise control works on hills depends upon the vehicle speed, load, and the steepness of the hills.

When going up steep hills, you might have to step on the accelerator pedal to maintain the vehicle speed.

When going downhill, you might have to brake or shift to a lower gear to keep the vehicle speed down. Of course, applying the brake or downshifting to SECOND (2) or LOW (L) turns off the cruise control. Many drivers find this to be too much trouble and do not use cruise control on steep hills.

Ending Cruise Control

There are several ways to turn off the cruise control:

- Step lightly on the brake pedal or push the clutch pedal, if you have a manual transaxle.
- Press the ON-OFF button again.
- Pull the cruise control lever toward you.

Erasing Speed Memory

When you turn off the cruise control or the ignition, the cruise control set speed memory is erased.

Downloaded from www.Manualslib.com manuals search engine

Exterior Lamps

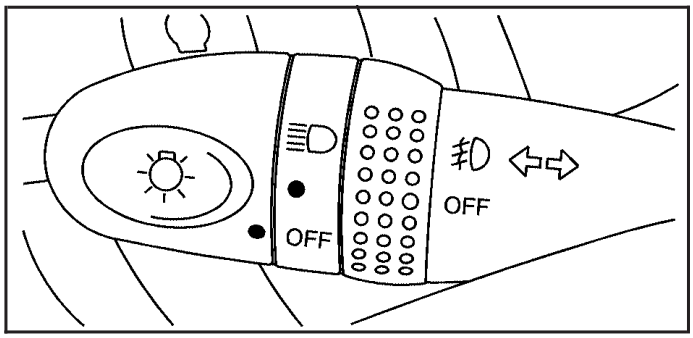

The lever on the left side of the steering column operates the exterior lamps.

(Exterior Lamps): Turn the outside part of the lever with the symbol on it, to operate the lamps. For vehicles sold in the U. S., this symbol will appear on the instrument panel cluster when your exterior lamps are on.

The exterior lamp switch has three positions:

OFF: Turning the switch to this position turns off all lamps, except the Daytime Running Lamps (DRL).

(Parking Lamps): Turning the switch to this position turns on the parking lamps together with the following:

- Sidemarker Lamps
- Taillamps
- License Plate Lamp
- Instrument Panel Lights

A symbol will appear on the instrument panel cluster when your parking lamps are on. See *Lights On Reminder on page 174* and *Taillamp Indicator Light on page 174* for additional information.

(Headlamps): Turning the switch to this position turns on the headlamps, together with the previously listed lamps and lights.

Headlamps on Reminder

If you turn the ignition to LOCK or ACC and leave the lamps on, you will hear a tone when you open the driver's door.

Downloaded from www.Manualslib.com manuals search engine

Daytime Running Lamps (DRL)

Daytime Running Lamps (DRL) can make it easier for others to see the front of your vehicle during the day. DRL can be helpful in many different driving conditions, but they can be especially helpful in the short periods after dawn and before sunset. Fully functional daytime running lamps are required on all vehicles first sold in Canada.

The DRL system will make the headlamps come on at a reduced brightness when the following conditions are met:

- The ignition is on with the engine running.
- The exterior lamps switch is off.
- The parking brake is released.

When the DRL are on, only the headlamps will be on at a reduced brightness. The taillamps, sidemarker and other lamps will not be on. The instrument panel will not be lit up either.

When you turn the exterior lamp switch to the headlamp position, the DRL will go off and the headlamps will come on. The other lamps that come on with the headlamps will also come on.

When it begins to get dark, the headlamps will automatically switch from DRL to the regular headlamps. See “Automatic Headlamp System” following.

When you turn the exterior lamp switch off, the regular lamps will go off and the headlamps will change to the reduced brightness of DRL provided it is not dark outside. DRL also comes on if only the parking lamps are being used.

Automatic Headlamp System

Your vehicle has an automatic light sensor on the top left corner of the instrument panel, so be sure it is not covered or the headlamps will be on continuously.

When it is dark enough outside, the automatic headlamp system will turn on the low-beam headlamps at the normal brightness along with other lamps such as the taillamps, sidemarker, parking lamps and instrument panel lights. This is indicated by the headlamp symbol on your instrument panel cluster. See *Instrument Panel Cluster on page 159*.

Downloaded from www.Manualslib.com manuals search engine

If you are driving through a parking garage, overcast weather, or a tunnel, the automatic headlamp system may turn on the low-beam headlamps at a normal brightness along with the taillamps, sidemarker, parking lamps and the instrument panel lights. The radio lights will be dimmer, and the instrument panel cluster lights may dim. There will be a delay before the lights will turn on when starting the car at night.

Fog Lamps

(Fog Lamps): Turn the band on the turn signal/multifunction lever to the fog lamp symbol to turn the fog lamps on. They will come on only when the headlamps are on low beam.

Some localities have laws that require the headlamps to be on along with the fog lamps.

Instrument Panel Brightness

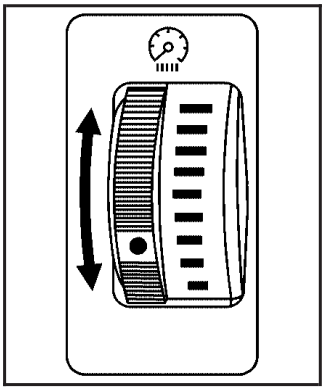

The instrument panel brightness control is located to the left of the steering wheel on the instrument panel. Turn the wheel on the left of the control up or down to increase or decrease brightness.

Turn the wheel all the way up for the maximum setting. It is recommended that the brightness level be kept at the maximum setting for all daytime driving to ensure proper visibility.

The brightness of the instrument panel lights will decrease when the headlamps are on.

Downloaded from www.Manualslib.com manuals search engine

Interior Lamps Control

The interior lights control is located on the overhead light. To change the interior lights setting, slide the switch to one of the following positions:

OFF: This position turns the light off.

ON: This position keeps the light on all the time.

Door: This position turns the light on when any door, the liftgate or the liftglass is opened. The light goes off when all the side doors, the liftgate and the liftglass are closed.

Entry Lighting

While the interior lights control is in the door position, the light will come on when any side door, the liftgate or the liftglass is opened. After all the doors, liftgate and liftglass are closed, and the key is out of the ignition, in LOCK or ACC, the light will remain on for about 15 seconds and then go out except under the following conditions:

- The ignition is turned to ACC or ON after all the doors, the liftgate and the liftglass are closed.
- All the doors and liftgate are locked when the liftglass is closed and the light is still on.

When any door is unlocked with the key or remote keyless entry system transmitter, the light comes on for 15 seconds, even if the door is not opened.

Downloaded from www.Manualslib.com manuals search engine

Reading Lamps

If your vehicle has a sunroof, there will be a reading lamp near the sunroof switch. Press the button to turn the lamp on and press it again to turn it off.

If your vehicle does not have a sunroof, the vehicle's inside rearview mirror may have reading lamps. If your vehicle has reading lamps, there are two buttons located on the bottom of the mirror. Press the buttons to turn the lamps on and press them again to turn the lamps off.

Accessory Power Outlet(s)

With the accessory power outlet, you can plug in auxiliary electrical equipment.

Your vehicle has an outlet under the climate controls.

To use the outlet, the ignition must be in ON or ACC. Pull down the small cover to access the outlet.

Notice: **Leaving electrical equipment on for extended periods will drain the battery. Always turn off electrical equipment when not in use and do not plug in equipment that exceeds the maximum amperage rating.**

This circuit is protected by a fuse and has a maximum current level. Do not use equipment exceeding the maximum amperage rating.

Certain power accessory plugs may not be compatible to the power accessory outlet and could result in blown vehicle or adapter fuses. If you experience a problem see your dealer for additional information on the power accessory plugs.

Notice: **Adding any electrical equipment to your vehicle may damage it or keep other components from working as they should. The repairs would not be covered by your warranty. Do not use equipment exceeding maximum amperage rating of 20 amperes. Check with your dealer before adding electrical equipment.**

When adding electrical equipment, be sure to follow the proper installation instructions included with the equipment.

Notice: **Improper use of the power outlet can cause damage not covered by your warranty. Do not hang any type of accessory or accessory bracket from the plug because the power outlets are designed for accessory power plugs only.**

Downloaded from www.Manualslib.com manuals search engine

Power Outlet 115 Volt Alternating Current

With this power outlet, you can plug in auxiliary electrical equipment with a maximum limit of 115 VAC. If you try to use equipment that requires more than the limit, a protection circuit will cut the power supply. The power will automatically restart when equipment that operates within the limit is plugged in.

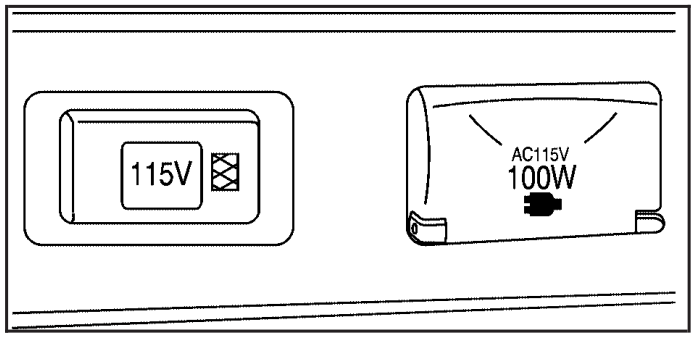

The power outlet is located near the center of the instrument panel. Before using the outlet, turn on the ignition and press the button next to the outlet. An indicator light in the button will come on. After using the outlet, press the button again to turn it off.

The power outlet is not designed for the following electrical equipment and they may not work properly:

- Equipment with high initial peak wattage: cathode-ray tube type televisions, compressor-driven refrigerators, electric power tools.
- Other equipment requiring an extremely stable power supply: microcomputer-controlled electric blankets, touch sensor lamps, etc.

Ashtray(s) and Cigarette Lighter

Notice: **If you put papers, pins, or other flammable items in the ashtray, hot cigarettes or other smoking materials could ignite them and possibly damage your vehicle. Never put flammable items in the ashtray.**

To use the lighter, if your vehicle has one, push the lighter in all the way and let go. When it is ready, it will pop back out by itself. If the engine is not running, the key must be in ACC to use the lighter.

Downloaded from www.Manualslib.com manuals search engine

It is not recommended to use the cigarette lighter to plug in auxiliary electrical equipment. Use the accessory power outlet for phones and other electrical equipment. See *Accessory Power Outlet(s) on page 150* or *Power Outlet 115 Volt Alternating Current on page 151*.

Notice: **Holding a cigarette lighter in while it is heating does not let the lighter back away from the heating element when it is hot. Damage from overheating can occur to the lighter or heating element, or a fuse could be blown. Do not hold a cigarette lighter in while it is heating.**

Your vehicle may have a removable ashtray that sits in your front cupholder in the center console storage area.

Climate Controls

Climate Control System

With this system you can control the heating, cooling and ventilation for your vehicle.

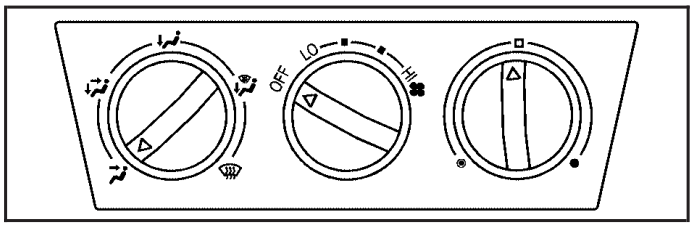

Operation

(Fan): Turn the center knob away from OFF to turn the system on. Turn the knob toward HI to increase fan speed.

If the airflow seems low when the fan is at the highest setting, the passenger compartment air filter may need to be replaced. For more information, see *Passenger Compartment Air Filter on page 156* and *Scheduled Maintenance on page 377*.

Downloaded from www.Manualslib.com manuals search engine

To change the current mode, select one of the following:

(Vent): Air is directed to the upper instrument panel outlets.

(Bi-Level): Air is directed to the upper instrument panel outlets, and to the floor outlets.

(Floor): Air is directed to the floor outlets and to the outboard outlets (for the side windows).

(Recirculation): Press this button, located in the center of the instrument panel to the left of the audio system, to turn the recirculation mode on or off. This mode recirculates the air inside the vehicle. It can be used to prevent outside air and odors from entering your vehicle or to help heat or cool the air inside your vehicle more quickly. When the button is pressed, an indicator light in the button comes on. Press the button again to turn off recirculate and to circulate outside air through the system. The indicator light will go off. Recirculate is automatically turned off when the climate control system mode knob is turned to defog or defrost or is between modes.

Temperature Control: Turn the right knob clockwise or counterclockwise to increase or decrease the temperature inside the vehicle.

A/C (Air Conditioning): Press this button, located in the center of the instrument panel to the left of the audio system, to turn the air-conditioning system on or off. When A/C is pressed, an indicator light in the button comes on to let you know that the air conditioning is activated.

MAX A/C (Maximum Air Conditioning): Press the A/C and recirculation buttons at the same time to select MAX A/C.

On hot days, open the windows to let hot inside air escape; then close them. This helps to reduce the time it takes for the vehicle to cool down. It also helps the system to operate more efficiently.

The air-conditioning system removes moisture from the air, so you might notice a small amount of water dripping underneath your vehicle while idling or after turning off the engine. This is normal.

Downloaded from www.Manualslib.com manuals search engine

Defogging and Defrosting

Fog on the inside of windows is a result of high humidity (moisture) condensing on the cool window glass. This can be minimized if the climate control system is used properly. There are two modes to clear fog or frost from the windshield. Use the defog mode to clear the inside of the windshield of fog or moisture and warm the passengers. Use the defrost mode to remove fog or frost from the outside of the windshield more quickly.

(Defog): Air is directed between the windshield, side windows, instrument panel outlets and the floor outlets. The air-conditioning compressor will run automatically in this setting without pressing A/C, unless the outside temperature is at or below 32°F (0°C).

(Defrost): Air is directed to the windshield, instrument panel outlets and the side windows. The air-conditioning compressor will run automatically in this setting without pressing A/C, unless the outside temperature is at or below 32°F (0°C).

Do not drive the vehicle until all the windows are clear.

Rear Window Defogger

The rear window defogger uses a warming grid to clear fog from the rear window.

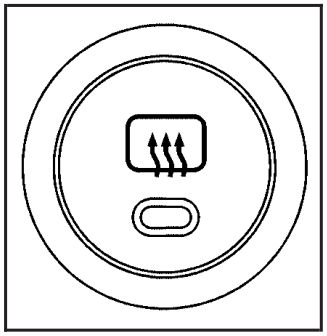

The rear window defogger button is located on the center of the instrument panel, above the audio system. The defogger does not operate with the rear liftglass opened.

The rear window defogger will only work when the ignition is in the ON position.

(Rear Defogger): Press the defogger button to turn the rear window defogger on or off. An indicator light in the button comes on to let you know that the rear window defogger is activated. Be sure to clear as much snow from the rear window as possible.

Downloaded from www.Manualslib.com manuals search engine

The rear window defogger will turn off automatically approximately 15 minutes after the button is pressed. The defogger can also be turned off by pressing the button again or by turning off the engine.

Notice: **Do not use a razor blade or sharp object to clear the inside rear window. Do not adhere anything to the defogger grid lines in the rear glass. These actions may damage the rear defogger. Repairs would not be covered by your warranty.**

Outlet Adjustment

Use the air outlets located in the center and outboard sides of the instrument panel, to change the direction of the air flowing through the vents.

Operation Tips

- Clear away any ice, snow or leaves from the air inlets at the base of the windshield that may block the flow of air into your vehicle.
- Use of non-GM approved hood deflectors may adversely affect the performance of the system.
- Keep the path under the front seats clear of objects to help circulate the air inside of your vehicle more effectively.
- If the airflow seems low when the fan is at the highest setting, the passenger compartment air filter may need to be replaced. For more information, see “Passenger Compartment Air Filter” following and *Scheduled Maintenance on page 377*.

Downloaded from www.Manualslib.com manuals search engine

Passenger Compartment Air Filter

Passenger compartment air, both outside and recirculated air, is routed through a passenger compartment air filter. The filter removes certain contaminants from the air, including pollen and dust particles. Reductions in airflow, which may occur more quickly in dusty areas, indicate that the filter needs to be replaced early. An air filter is available through your dealer. For how often to change the air filter, see *Scheduled Maintenance on page 377*.

The access panel for the air filter is behind the glove box. To replace the filter, follow these steps:

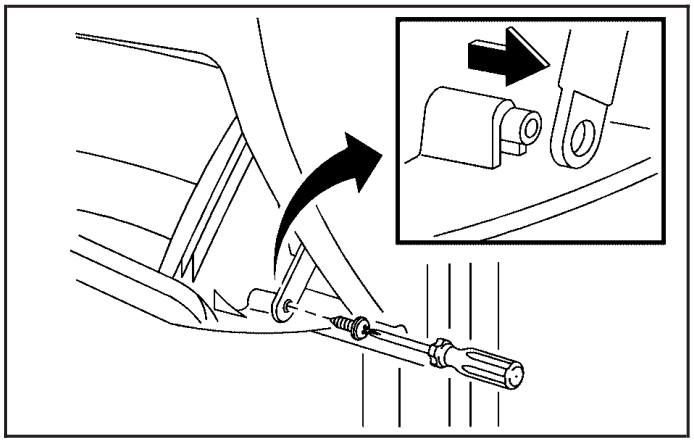

1. Lower the glove box door and remove the screw on the right side of the glovebox with a tool. Slide the arm of the glovebox off.
2. Push each side of the glovebox in and pull toward you.

Downloaded from www.Manualslib.com manuals search engine

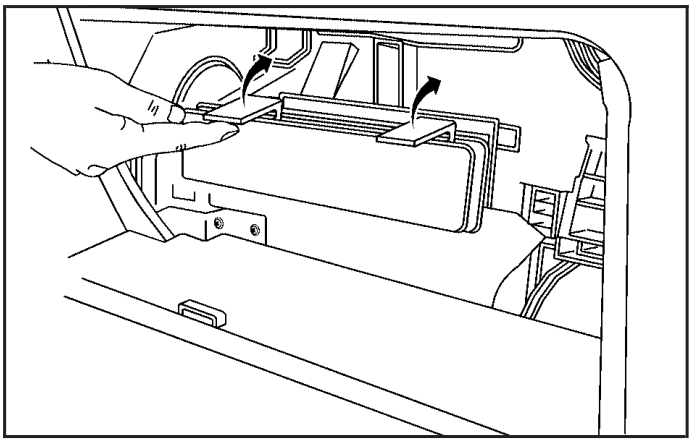

3. Lift the snaps on the filter cover to remove the cover.

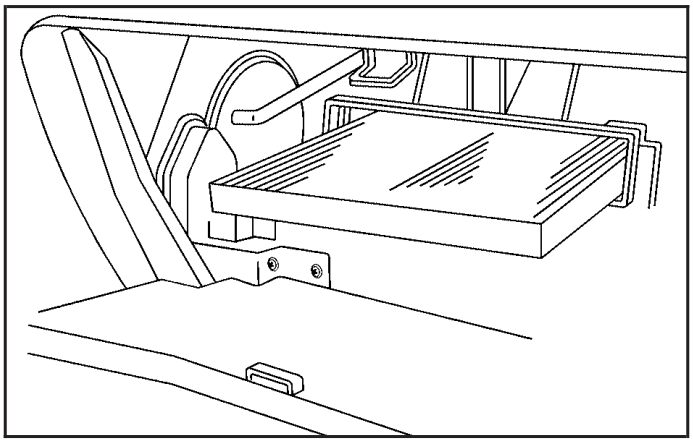

4. Remove the air filter.
5. Reverse the steps to install the new air filter.

It will not cause damage to your vehicle if you choose not to replace the air filter after removing it. However, the air coming into your vehicle will not be filtered.

Downloaded from www.Manualslib.com manuals search engine

Warning Lights, Gages, and Indicators

This part describes the warning lights and gages that may be on your vehicle. The pictures will help you locate them.

Warning lights and gages can signal that something is wrong before it becomes serious enough to cause an expensive repair or replacement. Paying attention to your warning lights and gages could also save you or others from injury.

Warning lights come on when there may be or is a problem with one of your vehicle's functions. As you will see in the details on the next few pages, some warning lights come on briefly when you start the engine just to let you know they're working. If you are familiar with this section, you should not be alarmed when this happens.

Gages can indicate when there may be or is a problem with one of your vehicle's functions. Often gages and warning lights work together to let you know when there's a problem with your vehicle.

When one of the warning lights comes on and stays on when you are driving, or when one of the gages shows there may be a problem, check the section that tells you what to do about it. Please follow this manual's advice. Waiting to do repairs can be costly and even dangerous. So please get to know your warning lights and gages. They are a big help.

Downloaded from www.Manualslib.com manuals search engine

Instrument Panel Cluster

The instrument panel is designed to let you know at a glance how your vehicle is running. You will know how fast you are going, how much fuel is left in the fuel tank and many other things you need to drive safely and economically.

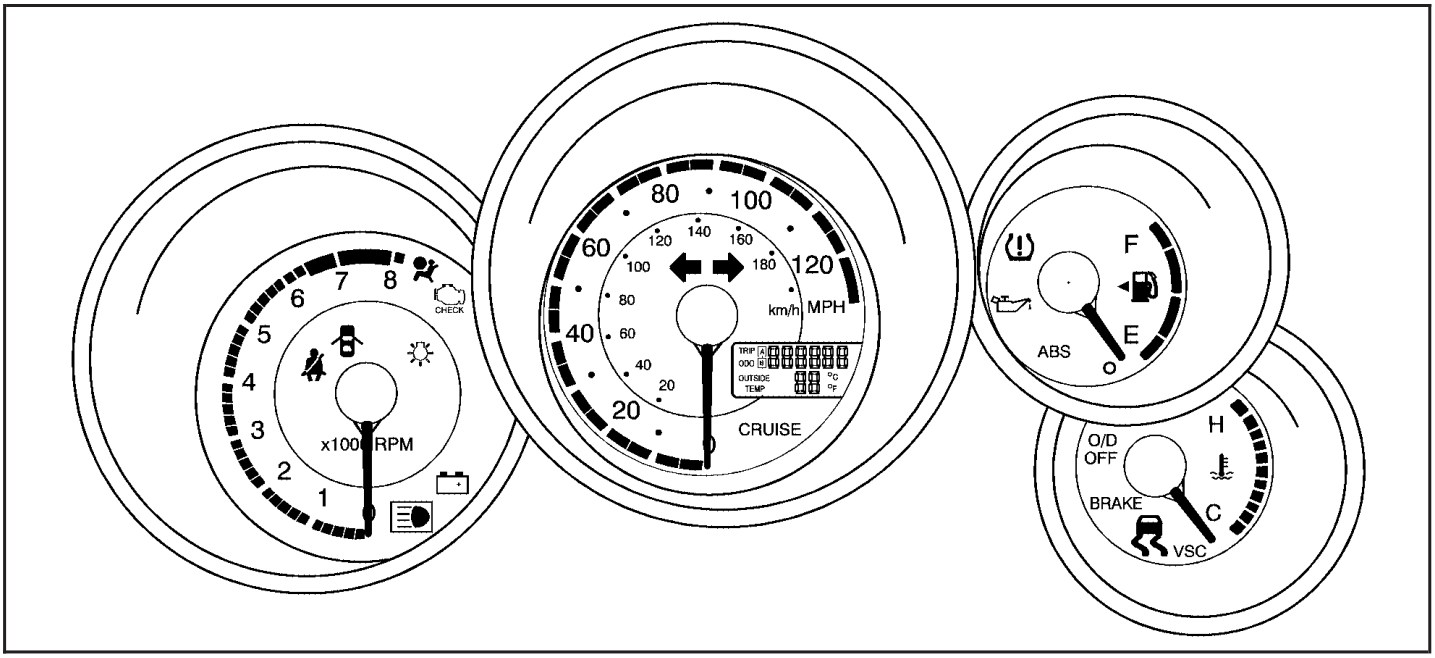

United States Cluster shown, Canada similar

Downloaded from www.Manualslib.com manuals search engine

Speedometer and Odometer

The speedometer lets you see your vehicle's speed in both miles per hour (mph) and kilometers per hour (km/h). The odometer shows how far your vehicle has been driven.

If your vehicle needs a new odometer installed, the new one must be set to the mileage total of the old odometer. If it cannot, then it is set at zero and a label must be put on the driver's door to show the old mileage reading when the new odometer was installed. See your dealer for more information.

Trip Odometers

The trip odometers can tell you how far your vehicle has been driven since you last set the trip odometer to zero.

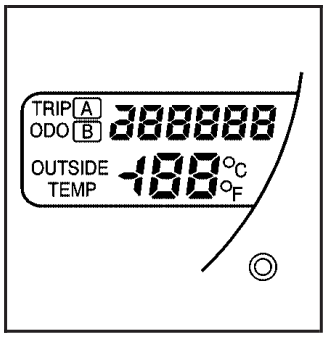

The button located on the right side of the instrument panel cluster allows you to switch between the odometer and the two trip odometers.

Press the button once to switch to TRIP A and again to switch to TRIP B. To return the display to the odometer reading, press the trip odometer button again.

To set the trip odometers to zero, press and hold the button.

Downloaded from www.Manualslib.com manuals search engine

Tachometer

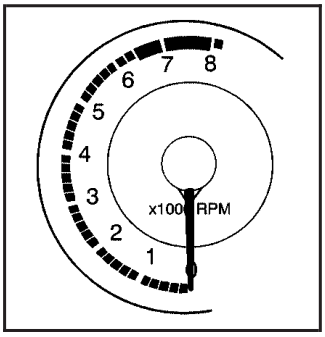

The tachometer shows engine speed in thousands of revolutions per minute (rpm).

Notice: **If you operate the engine with the tachometer in the shaded warning area, your vehicle could be damaged, and the damages would not be covered by your warranty. Do not operate the engine with the tachometer in the shaded warning area.**

Temperature Display

The outside air temperature is displayed on the center of the instrument panel, within the speedometer. The display will show the outside air temperature in Fahrenheit with a range from –22°F to 122°F (–30°C to 50°C).

Safety Belt Reminder Light

When the key is turned to ON or START, a chime will come on for several seconds to remind people to fasten their safety belts, unless the driver's safety belt is already buckled.

The safety belt light will also flash until the driver's belt is buckled. If the driver's belt is already buckled, neither the chime nor the light will come on.

Downloaded from www.Manualslib.com manuals search engine

Your vehicle also has a safety belt reminder light for the right front passenger position.

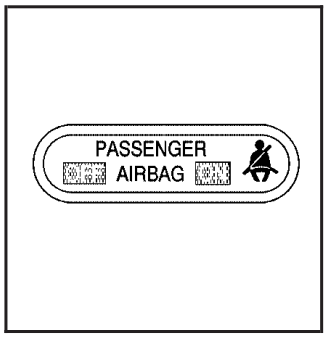

This light is located on the center of the instrument panel, above the audio system.

When the key is turned to ON or START, this light will come on as a reminder for the right front passenger to fasten their safety belt. This light will flash until the right front passenger's safety belt is buckled. The passenger's safety belt reminder light will not come on if the right front passenger's belt is already buckled or if a sensor does not detect the weight of a passenger in that seat.

If something is placed on the right front passenger seat, the sensors in the seat may detect that object and cause the right front passenger safety belt reminder light to come on. If this happens, remove the object.

Airbag Readiness Light

There is an airbag readiness light on the instrument panel cluster, which shows the airbag symbol. The system checks the airbag's electrical system for malfunctions. The light tells you if there is an electrical problem. The system monitors the airbag sensor assembly, front airbag sensors, seat-mounted side impact and roof-mounted airbag sensors, driver's seat position sensor, driver's seat belt buckle switch, right front occupant sensing system and indicator light, front passenger's seat belt buckle switch, seat belt pretensioner assemblies, inflators, interconnecting wiring and power sources. For more information on the airbag system, see *Airbag System on page 63*.

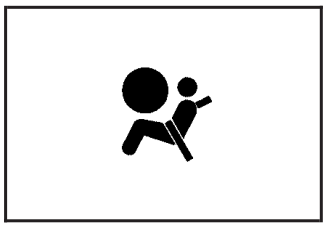

This light will come on briefly when you start your vehicle, then it should go out. This means the system is ready.

Downloaded from www.Manualslib.com manuals search engine

If the airbag readiness light stays on after you start the vehicle or comes on when you are driving, your airbag system may not work properly. Have your vehicle serviced right away.

⚠ CAUTION:

If the airbag readiness light stays on or keeps flashing after you start your vehicle, it means the airbag system and safety belt pretension system may not be working properly. The airbags in your vehicle may not inflate in a crash, or they could even inflate without a crash. To help avoid injury to yourself or others, have your vehicle serviced right away if the airbag readiness light stays on after you start your vehicle.

Passenger Airbag Status Indicator

Your vehicle has a passenger airbag status indicator in the instrument panel.

The indicator next to the passenger airbag status indicator lights is the passenger safety belt reminder light.

See *Safety Belt Reminder Light on page 161* for more information on that indicator.

When the ignition key is turned to ON, the passenger airbag status indicator will light ON and OFF as a system check.

Then, after several more seconds, the status indicator will light either ON or OFF if there is weight on the seat or if the safety belt is buckled, to let you know the status of the right front passenger's frontal and seat-mounted side impact airbag (if equipped).

Downloaded from www.Manualslib.com manuals search engine

Your vehicle has a rear seat that will accommodate a rear-facing child restraint. A label on your sun visor says, “Never put a rear-facing child seat in the front.” This is because the risk to the rear-facing child is so great, if the airbag deploys.

⚠ CAUTION:

Even though the passenger sensing system is designed to turn off the right front passenger’s frontal airbag and seat-mounted side impact airbag (if equipped) if the system detects a rear-facing child restraint, no system is fail-safe, and no one can guarantee that an airbag will not deploy under some unusual circumstance, even though it is turned off. We recommend that rear-facing child restraints be transported in vehicles with a rear seat that will accommodate a rear-facing child restraint, whenever possible.

If the word ON is lit on the passenger airbag status indicator, it means that the right front passenger’s frontal and seat-mounted side impact airbag (if equipped) are enabled (may inflate).

⚠ CAUTION:

If the on indicator comes on when you have a rear-facing child restraint installed in the right front passenger’s seat, it means that the passenger sensing system has not turned off the passenger’s frontal airbag and seat-mounted side impact airbag (if equipped). A child in a rear-facing child restraint can be seriously injured or killed if the right front passenger’s airbag inflates. This is because the back of the rear-facing child restraint would be very close to the inflating airbag. Do not use a rear-facing child restraint in the right front passenger’s seat if the airbag is turned on.

Downloaded from www.Manualslib.com manuals search engine

If the word OFF is lit on the passenger airbag status indicator, it means that the passenger sensing system has turned off the right front passenger's frontal airbag and seat-mounted side impact airbag (if equipped). See *Passenger Sensing System on page 74* for information about the conditions that may affect the airbag system and also important safety information.

If, after several seconds, all status indicator lights remain on, or if there are no lights at all, there may be a problem with the lights or the passenger sensing system. See your dealer for service.

⚠ CAUTION:

If the off indicator and the airbag readiness light ever come on together, it means that something may be wrong with the airbag system. If this ever happens, have the vehicle serviced promptly, because an adult-size person sitting in the right front passenger seat may not have the protection of an airbag. See *Airbag Readiness Light on page 162*.

Charging System Light

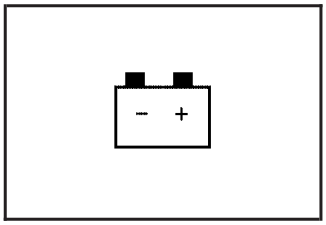

This light comes on briefly when you turn on the ignition, with the engine not running, as a check to show you it is working.

It should go out when the engine starts. If it stays on, or comes on while you are driving, you may have a problem with the electrical charging system. It could indicate that you have a loose generator drive belt or another electrical problem. Have it checked right away. Driving while this light is on could drain your battery.

If you must drive a short distance with the charging system light on, be certain to turn off all your accessories, such as the radio and air conditioner.

Downloaded from www.Manualslib.com manuals search engine

Brake System Warning Light

Your vehicle's hydraulic brake system is divided into two parts. If one part is not working, the other part can still work and stop you. For good braking, though, you need both parts working well.

If the warning light comes on, there is a brake problem. Have your brake system inspected right away.

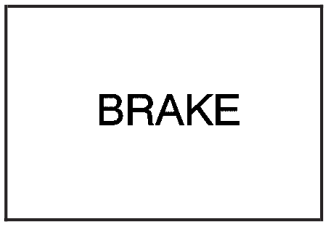

United States

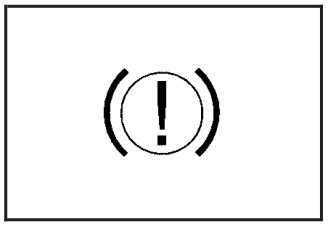

Canada

If your vehicle has anti-lock brakes, this light should come on when you turn the key to START. If it does not come on then, have it fixed so it will be ready to warn you if there is a problem.

When the ignition is on, the brake system warning light will also come on when you set your parking brake. The light will stay on if your parking brake does not release fully. If it stays on after your parking brake is fully released, it means you have a brake problem.

If the light comes on while you are driving, pull off the road and stop carefully. You may notice that the pedal is harder to push or the pedal may go closer to the floor. It may take longer to stop. If the light is still on, have the vehicle towed for service. See *Anti-Lock Brake System Warning Light on page 167* and *Towing Your Vehicle on page 259*.

⚠ CAUTION:

Your brake system may not be working properly if the brake system warning light is on. Driving with the brake system warning light on can lead to an accident. If the light is still on after you have pulled off the road and stopped carefully, have the vehicle towed for service.

Downloaded from www.Manualslib.com manuals search engine

Anti-Lock Brake System Warning Light

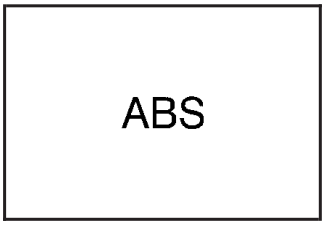

United States

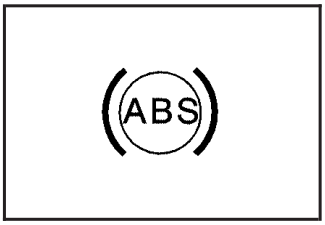

Canada

With the Anti-Lock Brake System (ABS), this light comes on when the engine is started and can stay on for several seconds. This is normal.

If the light stays on, turn the ignition to LOCK. If the light comes on while you are driving, stop as soon as possible and turn the ignition off. Then start the engine again to reset the system. If the light still stays on, or comes on again while you are driving, your vehicle needs service. If the regular brake system warning light is not on, you still have brakes, but you do not have anti-lock brakes. If the regular brake system warning light is also on, you do not have anti-lock brakes and there is a problem with the regular brakes. See *Brake System Warning Light on page 166*.

The ABS warning light comes on briefly when you turn the ignition key to ON. This is normal. If the light does not come on then, have it fixed so it will be ready to warn you if there is a problem.

Low Tire Pressure Warning Light

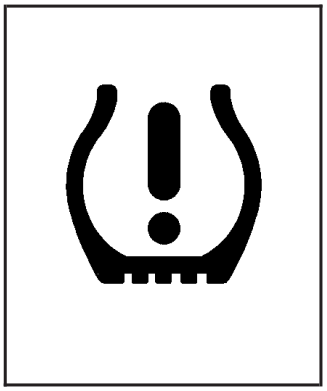

This light should come on briefly as you start the engine.

It will then come on only when a low tire pressure condition exists.

See *Tire Pressure Monitor System on page 330* for more information.

Downloaded from www.Manualslib.com manuals search engine

Traction Control System (TCS) Warning Light

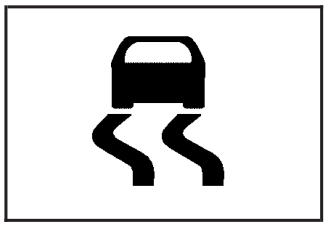

This light should come on briefly when you start the engine.

If it stays on or comes on while you are driving, there is a problem with your Traction Control System (TCS).

The TCS warning light comes on briefly when the ignition is turned to ON. It will come on again when you press the TRAC OFF button to turn off the TCS. See *Traction Control System (TCS) on page 230* for more information.

In the following cases, contact your dealer:

- The indicator light does not come on when the ignition is turned to ON.
- The indicator light remains on after the ignition is turned ON.
- The indicator light comes on with the normal driving mode while driving.

StabiliTrak® Indicator Light

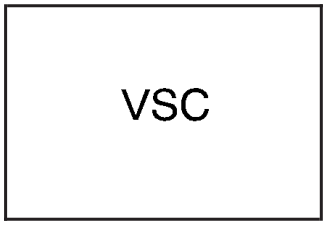

This light warns that there is a problem with the Traction Control System (TCS) or the Vehicle Stability Control (VSC) system.

The light will come on when the ignition is turned to ON and will go off after a few seconds.

If the light comes on while driving, the system does not work. However, as conventional braking operates when applied, there is no problem to continue driving.

Downloaded from www.Manualslib.com manuals search engine

In the following cases, contact your dealer:

- The warning light does not come on after the ignition is turned to ON.
- The warning light remains on after the ignition is turned to ON.
- The warning light comes on while driving.

The TCS light will come on when the VSC system warning light comes on, even if the TRAC OFF button is not pressed.

See *StabiliTrak® System on page 231* for more information on Vehicle Stability Control System.

See *Traction Control System (TCS) on page 230* for more information.

Engine Coolant Temperature Gage

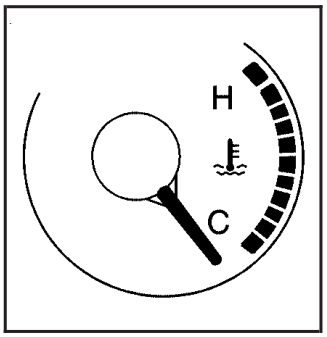

United States

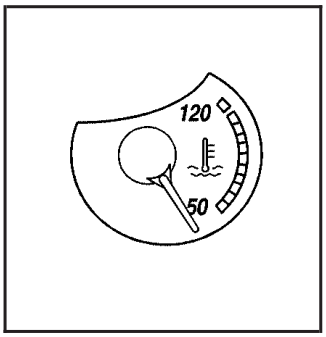

Canada

This gage shows the engine coolant temperature. If the gage pointer moves into the red area, the engine is too hot. It means that the engine has overheated. Pull off the road, stop your vehicle, and turn off the engine as soon as possible. See *Engine Overheating on page 297*.

Downloaded from www.Manualslib.com manuals search engine

Malfunction Indicator Lamp

Check Engine Light

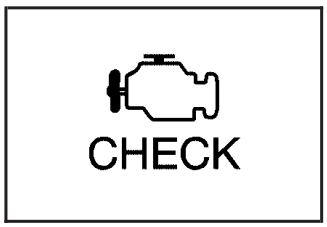

United States

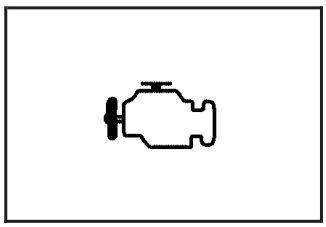

Canada

Your vehicle has a computer which monitors operation of the fuel, ignition, and emission control systems.

This system is called OBD II (On-Board Diagnostics-Second Generation) and is intended to assure that emissions are at acceptable levels for the life of the vehicle, helping to produce a cleaner environment. The CHECK ENGINE light comes on to indicate that there is a problem and service is required. Malfunctions often will be indicated by the system before any problem is apparent. This may prevent more serious damage to your vehicle. This system is also designed to assist your service technician in correctly diagnosing any malfunction.

Notice: **If you keep driving your vehicle with this light on, after awhile, the emission controls might not work as well, your vehicle's fuel economy might not be as good, and the engine might not run as smoothly. This could lead to costly repairs that might not be covered by your warranty.**

Notice: **Modifications made to the engine, transaxle, exhaust, intake, or fuel system of your vehicle or replacement tires that do not match your vehicle's original tires can affect your vehicle's emission controls and may cause this light to come on. Modifications to these systems could lead to costly repairs not covered by your warranty. This may also result in a failure to pass a required Emission Inspection/Maintenance test. See *Accessories and Modifications on page 272*.**

This light should come on, as a check to show you it is working, when the ignition is on and the engine is not running. If the light does not come on, have it repaired.

Downloaded from www.Manualslib.com manuals search engine

This light will also come on during a malfunction in one of two ways:

- **Light Flashing** — A misfire condition has been detected. A misfire increases vehicle emissions and may damage the emission control system on your vehicle. Diagnosis and service may be required.
- **Light On Steady** — An emission control system malfunction has been detected on your vehicle. Diagnosis and service may be required.

If the Light Is Flashing

The following may prevent more serious damage to your vehicle:

- Reducing vehicle speed
- Avoiding hard accelerations
- Avoiding steep uphill grades
- If you are towing a trailer, reduce the amount of cargo being hauled as soon as it is possible

If the light stops flashing and remains on steady, see “If the Light Is On Steady” following.

If the light continues to flash, when it is safe to do so, stop the vehicle. Find a safe place to park your vehicle. Turn the key off, wait at least 10 seconds and restart the engine. If the light remains on steady, see “If the Light Is On Steady” following. If the light is still flashing, follow the previous steps, and see your dealer for service as soon as possible.

If the Light Is On Steady

You also may be able to correct the emission system malfunction by considering the following:

Did you recently put fuel into your vehicle?

If so, reinstall the fuel cap, making sure to fully install the cap. See *Filling the Tank on page 277*. The diagnostic system can determine if the fuel cap has been left off or improperly installed. A loose or missing fuel cap will allow fuel to evaporate into the atmosphere. A few driving trips with the cap properly installed should turn the light off.

Downloaded from www.Manualslib.com manuals search engine

Did you just drive through a deep puddle of water?

If so, your electrical system may be wet. The condition will usually be corrected when the electrical system dries out. A few driving trips should turn the light off.

Have you recently changed brands of fuel?

If so, be sure to fuel your vehicle with quality fuel. See *Gasoline Octane on page 274*. Poor fuel quality will cause your engine not to run as efficiently as designed. You may notice this as stalling after start-up, stalling when you put the vehicle into gear, misfiring, hesitation on acceleration, or stumbling on acceleration. (These conditions may go away once the engine is warmed up.) This will be detected by the system and cause the light to turn on.

If you experience one or more of these conditions, change the fuel brand you use. It will require at least one full tank of the proper fuel to turn the light off.

If none of the above steps have made the light turn off, your dealer can check the vehicle. Your dealer has the proper test equipment and diagnostic tools to fix any mechanical or electrical problems that may have developed.

Emissions Inspection and Maintenance Programs

Some state/provincial and local governments have or may begin programs to inspect the emission control equipment on your vehicle. Failure to pass this inspection could prevent you from getting a vehicle registration.

Here are some things you need to know to help your vehicle pass an inspection:

Your vehicle will not pass this inspection if the Check Engine light is on or not working properly.

Your vehicle will not pass this inspection if the OBD (on-board diagnostic) system determines that critical emission control systems have not been completely diagnosed by the system. The vehicle would be considered not ready for inspection. This can happen if you have recently replaced your battery or if your battery has run down. The diagnostic system is designed to evaluate critical emission control systems during normal driving. This may take several days of routine driving. If you have done this and your vehicle still does not pass the inspection for lack of OBD system readiness, your dealer can prepare the vehicle for inspection.

Downloaded from www.Manualslib.com manuals search engine

Oil Pressure Light

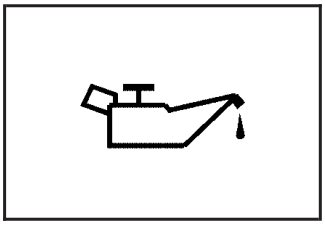

If there is a problem with the oil, this light may stay on after you start the engine or come on while you are driving.

⚠ CAUTION:

Do not keep driving if the oil pressure is low. If you do, your engine can become so hot that it catches fire. You or others could be burned. Check your oil as soon as possible and have your vehicle serviced.

Notice: **Lack of proper engine oil maintenance may damage the engine. The repairs would not be covered by your warranty. Always follow the maintenance schedule in this manual for changing engine oil.**

This indicates that there is not enough oil pressure to keep the engine properly lubricated and cool.

The engine could be low on oil, or have some other oil related problem. Have it fixed right away.

The oil light could also come on in three other situations.

- When the ignition is on but the engine is not running, the light comes on as a test to show you it is working, but the light goes out when you turn the ignition to START. If it does not come on with the ignition on, you could have a problem with the fuse or bulb. Have it fixed right away.
- Sometimes when the engine is idling at a stop, the light could blink on and off. Have it checked at your dealer.
- If you make a hard stop, the light could come on for a moment. Have it checked at your dealer.

Downloaded from www.Manualslib.com manuals search engine

Lights On Reminder

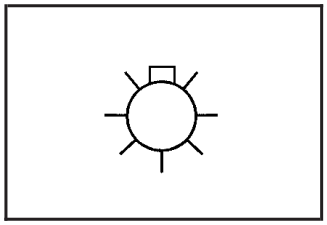

This light comes on whenever the headlights are on.

See *Headlamps on Reminder on page 146* for more information.

Taillamp Indicator Light

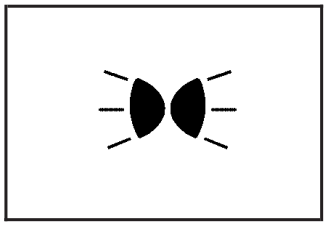

This light will come on when your taillamps are on.

Canada Only

See *Exterior Lamps on page 146* for more information.

Cruise Control Light

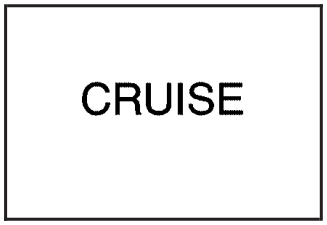

The CRUISE light comes on whenever you press the ON-OFF button to set your cruise control.

See *Cruise Control Light on page 174* for more information.

Overdrive Off Light

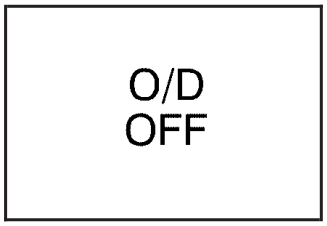

The automatic transaxle has overdrive. This light comes on whenever you turn off the overdrive.

See *Overdrive Off on page 111* for more information.

Downloaded from www.Manualslib.com manuals search engine

Highbeam On Light

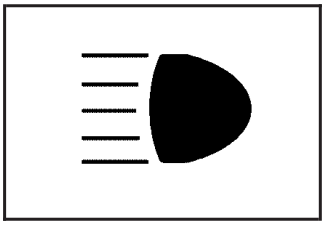

This light comes on when the high-beam headlamps are in use.

See *Headlamp High/Low-Beam Changer on page 140*.

Low Washer Fluid Warning Light

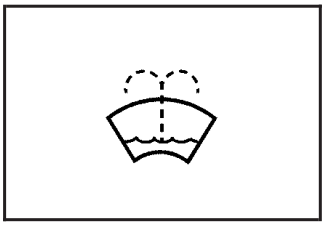

Canada Only

This light will come on when your windshield washer fluid is low.

See *Windshield Washer Fluid on page 305* for more information.

Door Ajar Light

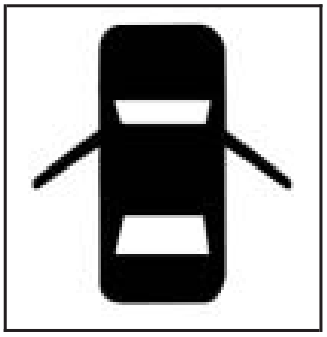

This light will come on if any door, the rear liftgate or the rear liftglass are not completely closed.

Downloaded from www.Manualslib.com manuals search engine

Fuel Gage

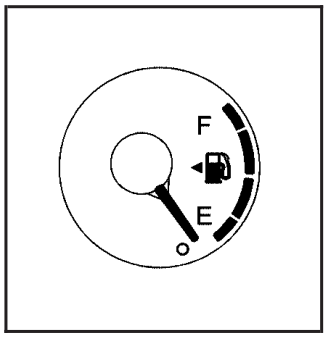

United States

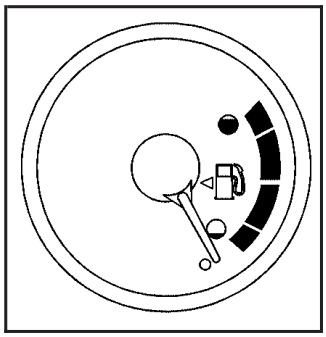

Canada

The fuel gage shows about how much fuel is in your fuel tank. An arrow on the fuel gage indicates that the fuel filler door is on the driver side of your vehicle. The fuel gage works only when the ignition switch is ON. When the gage first indicates E or empty, you still have a little fuel left, about 1 or 2 gallons (3.8 L or 7.6 L), but you need to get more right away. When your vehicle is low on fuel the low fuel warning light, located below the empty mark, will also come on to remind you to add fuel.

Here are five things some owners ask about. None of these show a problem with the fuel gage:

- At the gas station, the fuel pump shuts off before the gage reads F or full.
- It takes a little more or less fuel to fill up than the gage indicated. For example, the gage may have indicated the tank was half full, but it actually took more or less than half the tank's capacity to fill it.
- It takes the gage several minutes to read F or full after filling the vehicle with fuel.
- The gage moves a little when you turn, stop or speed up.
- The gage does not go back to E or empty when you turn off the ignition.

Downloaded from www.Manualslib.com manuals search engine

Low Fuel Warning Light

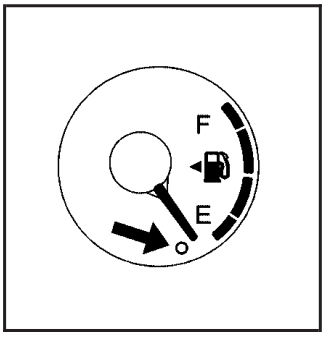

This light is located on the fuel gage and comes on when the fuel tank is low on fuel.

To turn it off, add fuel to the fuel tank. See *Fuel on page 274* for more information.

Audio System(s)

Determine which radio your vehicle has and then read the pages following to familiarize yourself with its features.

Driving without distraction is a necessity for a safer driving experience. See *Defensive Driving on page 222*. By taking a few moments to read this manual and get familiar with your vehicle's audio system, you can use it with less effort, as well as take advantage of its features. While your vehicle is parked, set up your audio system by presetting your favorite radio stations, setting the tone and adjusting the speakers. Then, when driving conditions permit, you can tune to your favorite stations using the presets and steering wheel controls if the vehicle has them.

⚠ CAUTION:

This system provides you with a far greater access to audio stations and song listings. Giving extended attention to entertainment tasks while driving can cause a crash and you or others can be injured or killed. Always keep your eyes on the road and your mind on the drive — avoid engaging in extended searching while driving.

Downloaded from www.Manualslib.com manuals search engine

Keeping your mind on the drive is important for safe driving. Here are some ways in which you can help avoid distraction while driving.

While your vehicle is parked:

- Familiarize yourself with all of its controls.
- Familiarize yourself with its operation.
- Set up your audio system by presetting your favorite radio stations, setting the tone, and adjusting the speakers. Then, when driving conditions permit, you can tune to your favorite radio stations using the presets and steering wheel controls if the vehicle has them.

Notice: **Before adding any sound equipment to your vehicle, such as an audio system, CD player, CB radio, mobile telephone, or two-way radio, make sure that it can be added by checking with your dealer. Also, check federal rules covering mobile radio and telephone units. If sound equipment can be added, it is very important to do it properly. Added sound equipment can interfere with the operation of your vehicle's engine, radio, or other systems, and even damage them. Your vehicle's systems can interfere with the operation of sound equipment that has been added.**

Setting the Time

The radio might have a button marked with an H or HR to represent hours and an M or MIN to represent minutes.

Press and hold the hour button until the correct hour displays. AM appears for morning hours. Press and hold the minute button until the correct minute displays. The time can be set with the ignition on or off.

To synchronize the time with an FM station broadcasting Radio Data System (RDS) information, press and hold the hour and minute buttons at the same time until UPDATED displays. If the time is not available from the station, NO UPDATE displays.

RDS time is broadcast once a minute. After tuning to an RDS broadcast station, it could take a few minutes for the time to update.

Downloaded from www.Manualslib.com manuals search engine

Radio with CD (Base Level)

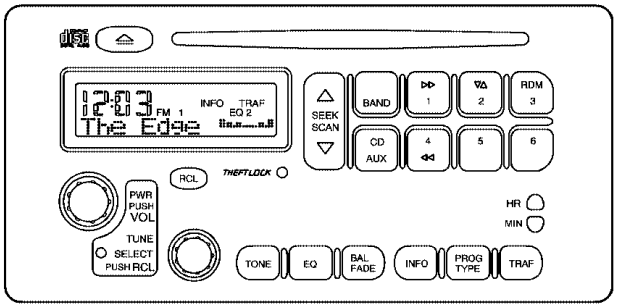

The radio has a theft-deterrent feature. A red light blinks while the engine is off to indicate the radio is protected. It will not operate if it is installed in a different vehicle.

Radio Data System (RDS)

The audio system has a Radio Data System (RDS). RDS features are available for use only on FM stations that broadcast RDS information.

With RDS, the radio can do the following:

- Seek to stations broadcasting the selected type of programming
- Receive announcements concerning local and national emergencies
- Display messages from radio stations
- Seek to stations with traffic announcements

This system relies upon receiving specific information from these stations and only works when the information is available. In rare cases, a radio station can broadcast incorrect information that causes the radio features to work improperly. If this happens, contact the radio station.

While the radio is tuned to an RDS station, the station name or call letters display instead of the frequency. RDS stations can also provide the time of day, a program type (PTY) for current programming, and the name of the program being broadcast.

Downloaded from www.Manualslib.com manuals search engine

XM™ Satellite Radio Service

XM™ is a satellite radio service that is based in the 48 contiguous United States and Canada. XM™ offers a large variety of coast-to-coast channels including music, news, sports, talk, traffic/weather (U.S. subscribers), and children's programming. XM™ provides digital quality audio and text information that includes song title and artist name. A service fee is required in order to receive the XM™ service. For more information, contact XM™; In the U.S. at www.xmradio.com or call 1-800-852-XMXM (9696) or in Canada at www.xmradio.ca or call 1-877-GET-XMSR (438-9677).

Playing the Radio

PWR (Power): Push this knob to turn the system on and off.

VOL (Volume): Turn this knob clockwise or counterclockwise to increase or to decrease the volume.

RCL (Recall): Push this button to display the time with the ignition off.

For RDS, push the RCL button to change what displays while using RDS. The display options are station, RDS station frequency, PTY (program type), and the name of the program (if available).

For XM™ (if equipped), push the RCL button while in XM™ mode to retrieve four different categories of information related to the current song or channel: Artist, Song Title, Category or PTY, Channel Number/Channel Name.

To change the default on the display, push the RCL button until the desired option displays, then hold the button until the display flashes. The selected display becomes the default.

Finding a Station

BAND: Press this button to switch between FM1, FM2, AM, or XM1 or XM2 (if equipped). The display shows the selection.

TUNE: Turn this knob to select radio stations.

Downloaded from www.Manualslib.com manuals search engine

△ **SEEK** ▽**:** Press the up or the down arrow to go to the next or to the previous station and stay there.

The radio seeks stations only with a strong signal that are in the selected band.

△ **SCAN** ▽**:** Press and hold either SCAN arrow for two seconds until SCAN displays and a beep sounds. The radio goes to a station, plays for a few seconds, then goes to the next station. Press either SCAN arrow again to stop scanning.

To scan preset stations, press and hold either SCAN arrow for more than four seconds until PSCAN and the preset number displays. A double beep sounds. The radio goes to the first preset station stored on your pushbuttons, plays for a few seconds, then goes to the next preset station. Press either SCAN arrow again to stop scanning presets.

The radio scans stations only with a strong signal that are in the selected band.

Setting Preset Stations

Up to 30 stations (six FM1, six FM2, and six AM, six XM1 and six XM2 (if equipped)), can be programmed on the six numbered pushbuttons, by performing the following steps:

1. Turn the radio on.
2. Press BAND to select FM1, FM2, AM, or XM1 or XM2.
3. Tune in the desired station.
4. Press and hold one of the six numbered pushbuttons until a beep sounds. When that numbered pushbutton is pressed, the station that was set returns and the equalization that was selected is stored for that pushbutton.
5. Repeat the steps for each pushbutton.

Downloaded from www.Manualslib.com manuals search engine

Setting the Tone (Bass/Treble)

TONE: Press and release this button until BASS, MID (midrange), or TREB (treble) displays. The SELECT LED indicator lights to show that the tone control can be adjusted. Turn the SELECT knob to increase or to decrease the tone. If a station is weak or has static, decrease the treble.

To return all of the tone controls to the middle position press and hold the TONE button until FLAT displays.

EQ (Equalizer): Press this button to select customized equalization settings.

Up to six customized equalization settings, can be programmed, by performing the following steps:

1. Turn the radio on.
2. Use the TONE button and the SELECT knob to create the equalization.
3. Press and hold the EQ button for two seconds. SELECT EQ # displays and the EQ symbol flashes.
4. Press EQ or turn the SELECT knob to select the EQ number.
5. Press and hold the EQ button to store the equalization setting and the number. EQ SAVED displays and a beep sounds.
6. Repeat the steps for the other EQ settings and numbers.

EQ 5 has been programmed at the factory for use with talk radio, but it can be set to a different tone.

Adjusting the Speakers (Balance/Fade)

BAL (Balance): To adjust the balance between the right and the left speakers, press and release this button until BAL (balance) displays. The SELECT LED indicator lights to show that the speakers can be adjusted. Turn the SELECT knob to move the sound toward the right or the left speakers.

FADE: To adjust the fade between the front and the rear speakers, press and release this button until FADE displays. The SELECT LED indicator lights to show that the speakers can be adjusted. Turn the SELECT knob to move the sound toward the front or the rear speakers.

To return all speaker settings to the middle position, press and hold the BAL FADE button for two seconds.

Downloaded from www.Manualslib.com manuals search engine

Finding a Program Type (PTY) Station (RDS and XM™)

To select and find a desired PTY perform the following:

1. Press PROG TYPE to activate program type select mode. The PTY symbol displays.
2. Turn the SELECT knob to select a PTY.
3. Once the desired PTY is displayed, press either SEEK arrow to select the PTY and take you to the PTY's first station.
4. To go to another station within that PTY and the PTY is displayed, press either SEEK arrow once. If the PTY is not displayed, press either SEEK arrow twice to display the PTY and then to go to another station.
5. Press PROG TYPE to exit program type select mode.

   If PTY times out and is no longer on the display, go back to Step 1.

If both PTY and TRAF are on, the radio searches for stations with the selected PTY and traffic announcements.

△ **SCAN** ▽**:** Scan the stations within a PTY by performing the following:

1. Press PROG TYPE to activate program type select mode. The PTY symbol displays.
2. Turn the SELECT knob to select a PTY.
3. Once the desired PTY displays, press and hold either SCAN arrow, and the radio begins scanning the stations in the PTY.
4. Press either SCAN arrow to stop at a station.

If both PTY and TRAF are on, the radio scans for stations with the selected PTY and traffic announcements.

BAND (Alternate Frequency): Alternate frequency lets the radio switch to a stronger FM station with the same program type. To turn alternate frequency on, press and hold BAND for two seconds. AF ON displays. The radio can switch to FM stations with a stronger frequency.

To turn alternate frequency off, press and hold BAND again for two seconds. AF OFF displays. The radio does not switch to stronger FM stations.

This function does not apply for XM™ Satellite Radio Service.

Downloaded from www.Manualslib.com manuals search engine

Setting Preset PTYs (RDS Only)

These pushbuttons have factory PTY presets. Up to 12 PTYs (six FM1 and six FM2), can be programmed on the six numbered pushbuttons, by performing the following steps:

1. Press BAND to select FM1 or FM2.
2. Press PROG TYPE to activate program type select mode. The PTY symbol displays.
3. Turn the SELECT knob to select a PTY.
4. Press and hold one of the six numbered pushbuttons until a beep sounds. When that numbered pushbutton is pressed, the PTY that was set returns, if program type select mode is on.
5. Repeat the steps for each pushbutton.

RDS Messages

ALERT!: Alert warns of local or national emergencies. When an alert announcement comes on the current radio station, ALERT! displays. You will hear the announcement, even if the volume is low or a CD is playing. If a CD is playing, play stops during the announcement. Alert announcements cannot be turned off.

ALERT! is not affected by tests of the emergency broadcast system. This feature is not supported by all RDS stations.

INFO (Information): If the current station has a message, INFO displays. Press this button to see the message. The message can display the artist, song title, call in phone numbers, etc.

If the entire message is not displayed, parts of the message displays every three seconds. To scroll through the message, press and release the INFO button. A new group of words displays after every press of the button. Once the complete message displays, INFO disappears from the display until another new message is received. The last message can be displayed by pressing the INFO button. The last message is shown until a new message is received or you tune to a different station.

Downloaded from www.Manualslib.com manuals search engine

TRAF (Traffic): If TRAF displays, the tuned station broadcasts traffic announcements. Press this button to receive the traffic announcement from the station. TRAF inside brackets displays. When a traffic announcement broadcasts on the tuned radio station, you will hear it.

If the station does not broadcast traffic announcements, press the TRAF button and the radio seeks to a station that does. When a station that broadcasts traffic announcements is found, the radio stops seeking and TRAF inside brackets displays. If no station is found that broadcasts traffic announcements, NO TRAFFIC displays.

If the brackets are on the display and TRAF is not, press the TRAF button to remove the brackets or use the TUNE knob or the SEEK arrows to go to a station that broadcasts traffic announcements. If no station is found that broadcasts traffic announcements, NO TRAFFIC displays.

The radio plays the traffic announcement if the volume is low. The radio interrupts the play of a CD if the last tuned station broadcasts traffic announcements and the brackets are displayed.

This function does not apply to XM™ Satellite Radio Service.

Radio Messages

If any error occurs repeatedly or if an error cannot be corrected, contact your dealer.

Radio Messages for XM™ Only

See *XM Radio Messages on page 216* later in this section for further detail.

Playing a CD

Insert a CD partway into the slot, label side up. The player pulls it in and the CD should begin playing. If you insert a CD with the radio off and the ignition on, it starts to play.

If the ignition or radio is turned off with a CD in the player, it stays in the player. When the ignition or radio is turned on, the CD starts playing where it stopped, if it was the last selected audio source.

When the CD is inserted, the CD symbol displays on the CD. As each new track starts to play, the track number displays.

The CD player can play the smaller 3 inch (8 cm) single CDs with an adapter ring. Full-size CDs and the smaller CDs are loaded in the same manner.

Downloaded from www.Manualslib.com manuals search engine

If playing a CD-R, the sound quality can be reduced due to CD-R quality, the method of recording, the quality of the music that has been recorded, and the way the CD-R has been handled. There can be an increase in skipping, difficulty in finding tracks, and/or difficulty in loading and ejecting. If these problems occur, check the bottom surface of the CD. If the surface of the CD is damaged, such as cracked, broken, or scratched, the CD will not play properly. If the surface of the CD is soiled, see *Care of Your CDs on page 219* for more information.

If there is no apparent damage, try a known good CD.

Do not add any label to a CD, it could get caught in the CD player. If a CD is recorded on a personal computer and a description label is needed, try labeling the top of the recorded CD with a marking pen.

Notice: **If a label is added to a CD, or more than one CD is inserted into the slot at a time, or an attempt is made to play scratched or damaged CDs, the CD player could be damaged. While using the CD player, use only CDs in good condition without any label, load one CD at a time, and keep the CD player and the loading slot free of foreign materials, liquids, and debris.**

If an error displays, see “CD Messages” later in this section.

▷▷ 1 (Forward): Press and hold this pushbutton to advance quickly within a track. Sound is heard at a reduced volume. Release the pushbutton to play the passage. The elapsed time of the track displays.

RDM 3 (Random): Press this pushbutton to hear the tracks in random, rather than sequential, order. RDM and the track number displays. Press RDM again to turn off random play.

Downloaded from www.Manualslib.com manuals search engine

4◁◁ (Reverse): Press and hold this pushbutton to reverse quickly within a track. Sound is heard at a reduced volume. Release the pushbutton to play the passage. The elapsed time of the track displays.

EQ (Equalizer): Press EQ to select an equalization setting while playing a CD. The equalization is set when a CD is played. See “EQ” listed previously for more information. If you select an EQ setting for your CD, it is activated each time a CD is played.

△ SEEK ▽: Press the down arrow to go to the start of the current track if more than eight seconds have played. Press the up arrow to go to the next track. If either arrow is held or pressed more than once, the player continues moving backward or forward through the CD.

△ SCAN ▽: Press and hold either arrow for more than two seconds until SCAN and the track number displays and a beep sounds. The CD goes to the next track, plays for a few seconds, then goes to the next track. Press either arrow again to stop scanning.

RCL (Recall): Push this button to see how long the current track has been playing. To change the default on the display, track, and elapsed time, push the button until the desired option displays, then hold the button until the display flashes. The selected display becomes the default. While elapsed time is showing, CD TIME displays.

BAND: Press this button to listen to the radio when a CD is playing. The inactive CD remains inside the radio for future listening.

CD AUX (Auxiliary): Press this button to play a CD when listening to the radio. The CD symbol displays when a CD is loaded.

⏏ (Eject): Press this button to eject a CD. Eject can be activated with either the ignition or radio off. CDs can be loaded with the ignition and radio off if this button is pressed first.

Downloaded from www.Manualslib.com manuals search engine

CD Messages

CHECK CD: If this message displays and/or the CD comes out, it could be for one of the following reasons:

- It is very hot. When the temperature returns to normal, the CD should play.
- You are driving on a very rough road. When the road becomes smoother, the CD should play.
- The CD is dirty, scratched, wet, or upside down.
- The air is very humid. If so, wait about an hour and try again.
- There could have been a problem while burning the CD.
- The label could be caught in the CD player.

If the CD is not playing correctly, for any other reason, try a known good CD.

If any error occurs repeatedly or if an error cannot be corrected, contact your dealer. If the radio displays an error message, write it down and provide it to your dealer when reporting the problem.

Radio with CD (MP3)

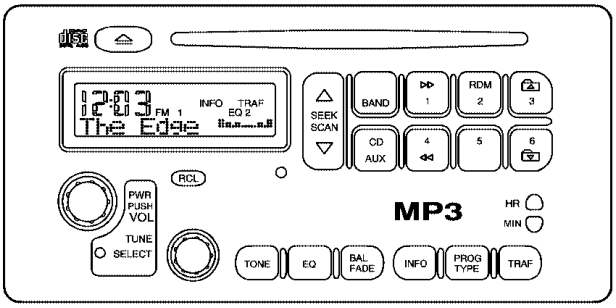

The radio has a theft-deterrent feature. A red light blinks while the engine is off to indicate the radio is protected. It will not operate if it is installed in a different vehicle.

Downloaded from www.Manualslib.com manuals search engine

Radio Data System (RDS)

The audio system has a Radio Data System (RDS). RDS features are available for use only on FM stations that broadcast RDS information.

With RDS, the radio can do the following:

- Seek to stations broadcasting the selected type of programming
- Receive announcements concerning local and national emergencies
- Display messages from radio stations
- Seek to stations with traffic announcements

This system relies upon receiving specific information from these stations and only works when the information is available. In rare cases, a radio station can broadcast incorrect information that causes the radio features to work improperly. If this happens, contact the radio station.

While the radio is tuned to an RDS station, the station name or the call letters display instead of the frequency. RDS stations can also provide the time of day, a program type (PTY) for current programming, and the name of the program being broadcast.

Playing the Radio

PWR (Power): Push this knob to turn the system on and off.

VOL (Volume): Turn this knob clockwise or counterclockwise to increase or to decrease the volume.

RCL (Recall): Push this button to switch the display between the radio station frequency and the time. When the ignition is turned off, push this button to display the time.

To change the default on the display, push the RCL button until the desired option displays, then hold the button until the display flashes. The selected display becomes the default.

Finding a Station

BAND: Press this button to switch between FM1, FM2, AM, or XM1 or XM2 (if equipped). The display shows the selection.

TUNE: Turn this knob to select radio stations.

Downloaded from www.Manualslib.com manuals search engine

△ **SEEK** ▽**:** Press the up or the down arrow to go to the next or to the previous station and stay there.

The radio only seeks stations with a strong signal that are in the selected band.

△ **SCAN** ▽**:** Press and hold either SCAN arrow for two seconds until SCAN displays and a beep sounds. The radio goes to a station, plays for a few seconds, then goes to the next station. Press either SCAN arrow again to stop scanning.

To scan preset stations, press and hold either SCAN arrow for more than four seconds until PSCAN and the preset number displays and a double beep sounds. The radio goes to the first preset station, plays for a few seconds, then goes to the next preset station. Press either SCAN arrow again to stop scanning presets.

The radio scans stations only with a strong signal that are in the selected band.

Setting Preset Stations

Up to 18 stations (six FM1, six FM2, and six AM), can be programmed on the six numbered pushbuttons, by performing the following steps:

1. Turn the radio on.
2. Press BAND to select FM1, FM2, or AM.
3. Tune in the desired station.
4. Press and hold one of the six numbered pushbuttons until a beep sounds. When that numbered pushbutton is pressed, the station that was set, returns and the equalization that was selected is stored for that pushbutton.
5. Repeat the steps for each pushbutton.

Downloaded from www.Manualslib.com manuals search engine

Setting the Tone (Bass/Midrange/Treble)

TONE: Press and release this button until BASS, MID (midrange), or TREB (treble) displays. The SELECT LED indicator lights to show that the tone control can be adjusted. Turn the SELECT knob to increase or to decrease. If a station is weak or has static, decrease the treble.

Pressing and holding the TONE button until FLAT displays, returns all of the tone controls to the middle position.

EQ (Equalizer): Press this button to select customized bass, midrange, and treble equalization settings.

Up to six customized equalization settings, can be programmed on the six numbered pushbuttons, by performing the following steps:

1. Turn the radio on.
2. Use the TONE button and the SELECT knob to create the desired equalization.
3. Press and hold the EQ button for two seconds. SELECT EQ # displays and the EQ symbol flashes.
4. Press EQ or turn the SELECT knob to select the desired EQ number.
5. Press and hold the EQ button to store the equalization setting and the number. A beep sounds and EQ SAVED displays.
6. Repeat the steps for the other EQ settings and numbers.

EQ 5 has been programmed at the factory for use with talk radio, but it can be set to a different tone.

Adjusting the Speakers (Balance/Fade)

BAL (Balance): To adjust the balance between the right and the left speakers, press and release this button until BAL displays. The SELECT LED indicator lights to show that the speakers can be adjusted. Turn the SELECT knob to move the sound toward the right or the left speakers.

FADE: To adjust the fade between the front and the rear speakers, press and release this button until FADE displays. The SELECT LED indicator lights to show that the speakers can be adjusted. Turn the SELECT knob to move the sound toward the front or the rear speakers.

Pressing and holding the BAL FADE button for two seconds returns all speaker settings to the middle position.

Downloaded from www.Manualslib.com manuals search engine

Finding a Program Type (PTY) Station (RDS)

To select and find a desired PTY perform the following:

1. Press PROG TYPE to activate program type select mode. The PTY symbol displays.
2. Turn the SELECT knob to select a PTY.
3. Once the desired PTY displays, press either SEEK arrow to select the PTY and to take you to the PTY's first station.
4. To go to another station within that PTY, and the PTY displays, press either SEEK arrow once. If the PTY is not displayed, press either SEEK arrow twice to display the PTY and then to go to another station.
5. Press PROG TYPE to exit program type select mode.

   If PTY times out and is no longer on the display, go back to Step 1.

If both PTY and TRAF are on, the radio searches for stations with the selected PTY and traffic announcements.

△ **SCAN** ▽**:** Scan the stations within a PTY by performing the following:

1. Press PROG TYPE to activate program type select mode. The PTY symbol displays.
2. Turn the SELECT knob to select a PTY.
3. Once the desired PTY is displayed, press and hold either SCAN arrow, and the radio begins scanning the stations in the PTY.
4. Press either SCAN arrow to stop at a station.

If both PTY and TRAF are on, the radio scans for stations with the selected PTY and traffic announcements.

BAND (Alternate Frequency): Alternate frequency lets the radio switch to a stronger FM station with the same program type. To turn alternate frequency on, press and hold BAND for two seconds. AF ON displays. The radio can switch to FM stations with a stronger frequency.

To turn alternate frequency off, press and hold BAND again for two seconds. AF OFF displays. The radio does not switch to stronger FM stations.

Downloaded from www.Manualslib.com manuals search engine

Setting Preset PTYs (RDS Only)

These pushbuttons have factory PTY presets. Up to 12 PTYs (six FM1 and six FM2), can be programmed on the six numbered pushbuttons, by performing the following steps:

1. Press BAND to select FM1 or FM2.
2. Press PROG TYPE to activate program type select mode. The PTY symbol displays.
3. Turn the SELECT knob to select a PTY.
4. Press and hold one of the six numbered pushbuttons until a beep sounds. When that numbered pushbutton is pressed, the PTY that was set, returns, if program type select mode is activated.
5. Repeat the steps for each pushbutton.

RDS Messages

ALERT!: Alert warns of local or national emergencies. When an alert announcement comes on the current radio station, ALERT! displays. You will hear the announcement, even if the volume is low or a CD is playing. If a CD is playing, play stops during the announcement. Alert announcements cannot be turned off.

ALERT! is not affected by tests of the emergency broadcast system. This feature is not supported by all RDS stations.

INFO (Information): If the current station has a message, INFO displays. Press this button to see the message. The message can display the artist, song title, call in phone numbers, etc.

If the entire message is not displayed, parts of the message displays every three seconds. To scroll through the message, press and release the INFO button. A new group of words display after every press of this button. Once the complete message has displayed, the information symbol disappears from the display until another new message is received. The last message can be displayed by pressing the INFO button. The last message is shown until a new message is received or you tune to a different station.

Downloaded from www.Manualslib.com manuals search engine

TRAF (Traffic): If TRAF displays, the tuned station broadcasts traffic announcements. To receive the traffic announcement from the tuned station, press this button. Brackets are displayed around TRAF and when a traffic announcement broadcasts on the tuned radio station, you will hear it.

If the station does not broadcast traffic announcements, press the TRAF button and the radio seeks to a station that does. When a station that broadcasts traffic announcements is found, the radio stops seeking and brackets are displayed around TRAF. If no station is found that broadcasts traffic announcements, NO TRAFFIC displays.

If the brackets are on the display and TRAF is not, press the TRAF button to remove the brackets or use the TUNE knob or the SEEK arrows to go to a station that supports traffic announcements. If no station is found that broadcasts traffic announcements, NO TRAFFIC displays.

The radio plays the traffic announcement if the volume is low. The radio interrupts the play of a CD if the last tuned station broadcasts traffic announcements and the brackets display.

Playing a CD

Insert a CD partway into the slot, label side up. The player pulls it in and READING DISC and the CD symbol displays. If you want to insert a CD with the ignition off, first press the eject button or push the RCL button.

If the ignition or radio is turned off with a CD in the player it stays in the player. When the ignition or radio is turned on, the CD starts to play where it stopped, if it was the last selected audio source.

When the CD is inserted, the CD symbol displays. As each new track starts to play, the track number displays.

The CD player can play the smaller 3 inch (8 cm) single CDs with an adapter ring. Full-size CDs and the smaller CDs are loaded in the same manner.

Downloaded from www.Manualslib.com manuals search engine

If playing a CD-R, the sound quality can be reduced due to CD-R quality, the method of recording, the quality of the music that has been recorded, and the way the CD-R has been handled. There can be an increase in skipping, difficulty in finding tracks, and/or difficulty in loading and ejecting. If these problems occur, check the bottom surface of the CD. If the surface of the CD is damaged, such as cracked, broken, or scratched, the CD will not play properly. If the surface of the CD is soiled, see *Care of Your CDs on page 219* for more information.

If there is no apparent damage, try a known good CD.

Do not add any label to a CD, it could get caught in the CD player. If a CD is recorded on a personal computer and a description label is needed, try labeling the top of the recorded CD with a marking pen.

Notice: **If a label is added to a CD, or more than one CD is inserted into the slot at a time, or an attempt is made to play scratched or damaged CDs, the CD player could be damaged. While using the CD player, use only CDs in good condition without any label, load one CD at a time, and keep the CD player and the loading slot free of foreign materials, liquids, and debris.**

If an error displays, see “CD Messages” later in this section.

▷▷ **1 (Forward):** Press and hold this pushbutton to advance quickly within a track. Sound is heard at a reduced volume. Release this pushbutton to play the passage. The elapsed time of the track displays.

RDM 2 (Random): Press this pushbutton to hear the tracks in random, rather than sequential, order. RDM and the track number displays. Press RDM again to turn off random play.

3 (Next Folder): This button does not have a function for non-MP3 CDs.

Downloaded from www.Manualslib.com manuals search engine

4 ◁◁ (Reverse): Press and hold this pushbutton to reverse quickly within a track. Sound is heard at a reduced volume. Release this pushbutton to play the passage. The elapsed time of the track displays.

6 (Previous Folder): This button does not have a function for non-MP3 CDs.

EQ (Equalizer): Press EQ to select the desired customized equalization setting while playing a CD. The equalization is automatically set whenever a CD is played. See “EQ” listed previously for more information.

△ SEEK ▽: Press the up arrow to go to the start of the next track. Press the down arrow to go to the start of the previous track. Pressing either arrow for more than two seconds searches the previous or next tracks at two tracks per second. When the desired track number displays, release the arrow to stop searching and to play the track.

△ SCAN ▽: Press and hold either arrow for more than two seconds until SCAN and the track number displays and a beep sounds. The CD goes to the next track, plays for a few seconds, then goes to the next track. Press either arrow again to stop scanning.

RCL (Recall): Push this button to see how long the current track has been playing. To change the default on the display, track and elapsed time, push the button until the desired option displays, then hold the button until the display flashes. The selected display is now the default. While elapsed time displays, CD TIME displays.

BAND: Press this button to listen to the radio when a CD is playing. The inactive CD remains inside the radio for future listening.

CD AUX (Auxiliary): Press this button to play a CD when listening to the radio. The CD symbol displays when a CD is loaded.

⏏ (Eject): Press this button to eject a CD. Eject can be activated with either the ignition or radio off. CDs can be loaded with the radio and ignition off if this button is pressed first.

Downloaded from www.Manualslib.com manuals search engine

Playing an MP3 CD-R Disc

Your vehicle's radio system may have the MP3 feature. If it has this feature, it is capable of playing an MP3 CD-R disc. For more information on how to play an MP3 CD-R disc, see *Using an MP3 on page 210* later in this section.

CD Messages

CHECK CD: If this message displays and/or the CD comes out, it could be for one of the following reasons:

- It is very hot. When the temperature returns to normal, the CD should play.
- You are driving on a very rough road. When the road becomes smoother, the CD should play.
- The CD is dirty, scratched, wet, or upside down.
- The air is very humid. If so, wait about an hour and try again.
- The format of the CD may not be compatible. See *Using an MP3 on page 210* later in this section.
- There could have been a problem while burning the CD.
- The label could be caught in the CD player.

If the CD is not playing correctly, for any other reason, try a known good CD.

If any error occurs repeatedly or if an error cannot be corrected, contact your dealer. If the radio displays an error message, write it down and provide it to your dealer when reporting the problem.

Downloaded from www.Manualslib.com manuals search engine

Radio with Six-Disc CD

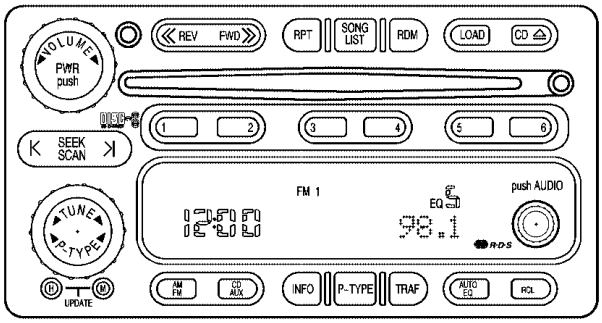

If your vehicle has the Monsoon audio system, it includes seven speakers. The radio displays MONSOON while the radio or the ignition is turned on. See your dealer for details.

The radio has a theft-deterrent feature. A red light blinks while the engine is off to indicate the radio is protected. It will not operate if it is installed in a different vehicle.

Playing the Radio

PWR (Power): Push this knob to turn the system on and off.

VOLUME: Turn this knob clockwise or counterclockwise to increase or to decrease the volume.

RCL (Recall): Press this button to display the current radio station frequency. While the ignition is off, press this button to display the time.

To change the default on the display, press the RCL button until the desired option displays, then hold the button until the display flashes. The selected display is now the default.

Downloaded from www.Manualslib.com manuals search engine

Finding a Station

AM/FM: Press this button to switch between FM1, FM2, or AM. The selection displays.

TUNE: Turn this knob to select radio stations.

⊢ **SEEK** ⊣ **:** Press the right or the left arrow to go to the next or to the previous station and stay there.

The radio only seeks stations with a strong signal that are in the selected band.

⊢ **SCAN** ⊣ **:** Press and hold either SCAN arrow for two seconds until SC displays and a beep sounds. The radio goes to a station, plays for a few seconds, then goes to the next station. Press either SCAN arrow again to stop scanning.

To scan preset stations, press and hold either SCAN arrow for more than four seconds. PRESET SCAN displays and a double beep sounds. The radio goes to a preset station stored on the pushbuttons, plays for a few seconds, then goes to the next preset station. Press either SCAN arrow again to stop scanning presets.

The radio only scans stations with a strong signal that are in the selected band.

Setting Preset Stations

Up to 18 stations (six FM1, six FM2, and six AM), can be programmed on the six numbered pushbuttons, by performing the following steps:

1. Turn the radio on.
2. Press AM/FM to select FM1, FM2, or AM.
3. Tune in the desired station.
4. Press and hold one of the six numbered pushbuttons until a beep sounds. When that numbered pushbutton is pressed, the station that was set, returns and the equalization that was selected, is stored for that pushbutton.
5. Repeat the steps for each pushbutton.

Downloaded from www.Manualslib.com manuals search engine

Setting the Tone (Bass/Midrange/Treble)

AUDIO: Push and release the AUDIO knob until BASS, MID (midrange), or TREB (treble) displays. Turn the knob to increase or to decrease the tone. If a station is weak or has static, decrease the treble.

To adjust bass, midrange, or treble to the middle position, select BASS, MID, or TREB and push and hold the AUDIO knob. The radio beeps once and adjusts the display level to the middle position.

To adjust all tone and speaker controls to the middle position, push and hold the AUDIO knob when no tone or speaker controls display. CENTERED displays and a beep sounds.

AUTO EQ (Automatic Equalization): Press this button to select customized equalization settings designed for country, jazz, talk, pop, rock, and classical.

To return to the manual mode, press the AUTO EQ button until CUSTOM displays. Then manually adjust the bass, midrange, and treble using the AUDIO knob.

Adjusting the Speakers (Balance/Fade)

AUDIO: To adjust the balance between the right and the left speakers, push and release the AUDIO knob until BAL (balance) displays. Turn the knob to move the sound toward the right or the left speakers.

To adjust the fade between the front and rear speakers, push and release the AUDIO knob until FAD (fade) displays. Turn the knob to move the sound toward the front or the rear speakers.

To adjust the balance and the fade to the middle position, select balance or fade and push and hold the AUDIO knob. The radio beeps once and adjusts the display level to the middle position.

To adjust all tone and speaker controls to the middle position, push and hold the AUDIO knob when no tone or speaker controls display. CENTERED displays and a beep sounds.

Downloaded from www.Manualslib.com manuals search engine

Radio Data System (RDS)

The audio system has a Radio Data System (RDS). RDS features are available for use only on FM stations that broadcast RDS information.

With RDS, the radio can do the following:

- Seek to stations broadcasting the selected type of programming
- Receive announcements concerning local and national emergencies
- Display messages from radio stations
- Seek to stations with traffic announcements

This system relies upon receiving specific information from these stations and only works when the information is available. In rare cases, a radio station can broadcast incorrect information that causes the radio features to work improperly. If this happens, contact the radio station.

While the radio is tuned to an RDS station, the station name or call letters display instead of the frequency. RDS stations can also provide the time of day, a program type (PTY) for current programming, and the name of the program being broadcast.

Finding a Program Type (PTY) Station

To select and find a desired PTY perform the following:

1. Press the P-TYPE button to activate program type select mode. P-TYPE and the last selected PTY displays.
2. Turn the P-TYPE knob to select a PTY.
3. Once the desired PTY displays, press either SEEK arrow to select and to go to the PTY's first station.
4. To go to another station within that PTY and the PTY displays, press either SEEK arrow once. If the PTY does not display, press either SEEK arrow twice to display the PTY and then to go to another station.
5. Press the P-TYPE button to exit program type select mode.

   If PTY times out and is no longer on the display, go back to Step 1.

If both PTY and TRAF are on, the radio searches for stations with the selected PTY and traffic announcements.

Downloaded from www.Manualslib.com manuals search engine

To use the PTY interrupt feature, press and hold the P-TYPE button until a beep sounds on the PTY you want to interrupt with. When selected, an asterisk displays beside that PTY on the display. Select multiple interrupts if desired. When listening to a CD, the last selected RDS station interrupts play if that selected program type format is broadcast.

⊲ **SCAN** ⊳ **:** Scan the stations within a PTY by performing the following:

1. Press the P-TYPE button to activate program type select mode. P-TYPE and the last selected PTY displays.
2. Turn the P-TYPE knob to select a PTY.
3. Once the desired PTY is displayed, press and hold either SCAN arrow, and the radio begins scanning the stations in the PTY.
4. Press either SCAN arrow to stop at a station.

If both PTY and TRAF are on, the radio scans for stations with the selected PTY and traffic announcements.

Alternate Frequency: Alternate frequency allows the radio to switch to a stronger FM station with the same program type. To turn alternate frequency on, press and hold AM/FM for two seconds. AF ON displays. The radio can switch to FM stations with a stronger frequency.

To turn alternate frequency off, press and hold AM/FM again for two seconds. AF OFF displays. The radio does not switch to stronger FM stations.

Setting Preset PTYs

These pushbuttons have factory PTY presets. Up to 12 PTYs (six FM1 and six FM2), can be programmed on the six numbered pushbuttons, by performing the following steps:

1. Press AM/FM to select FM1 or FM2.
2. Press the P-TYPE button to activate program type select mode. P-TYPE and the last selected PTY displays.
3. Turn the P-TYPE knob to select a PTY.
4. Press and hold one of the six numbered pushbuttons until a beep sounds. When that numbered pushbutton is pressed, the PTY that was set, returns.
5. Repeat the steps for each pushbutton.

Downloaded from www.Manualslib.com manuals search engine

RDS Messages

ALERT!: Alert warns of local or national emergencies. When an alert announcement comes on the current radio station, ALERT! displays. You will hear the announcement, even if the volume is low or a CD is playing. If a CD is playing, play stops during the announcement. Alert announcements cannot be turned off.

ALERT! is not affected by tests of the emergency broadcast system. This feature is not supported by all RDS stations.

INFO (Information): If the current station has a message, INFO displays. Press this button to see the message. The message can display the artist, song title, call in phone numbers, etc.

If the entire message is not displayed, parts of the message displays every three seconds. To scroll through the message, press and release the INFO button. A new group of words display after every press of this button. Once the complete message displays, INFO disappears from the display until another new message is received. The last message can be displayed by pressing the INFO button. The last message is shown until a new message is received or you tune to a different station.

TRAF (Traffic): If TRAF displays, the tuned station broadcasts traffic announcements. To receive the traffic announcement from the tuned station, press this button. Brackets are displayed around TRAF and when a traffic announcement broadcasts on the tuned radio station, you will hear it.

If the station does not broadcast traffic announcements, press the TRAF button and the radio seeks to a station that does. When a station that broadcasts traffic announcements is found, the radio stops seeking and brackets are displayed around TRAF. If no station is found that broadcast traffic announcements, NO TRAFFIC displays.

If the brackets are on the display and TRAF is not, press the TRAF button to remove the brackets or use the TUNE knob or the SEEK arrows to go to a station that supports traffic announcements. If no station is found that broadcasts traffic announcements, NO TRAFFIC displays.

The radio plays the traffic announcements if the volume is low. The radio interrupts the play of a CD if the last tuned station broadcasts traffic announcements and the brackets display.

Downloaded from www.Manualslib.com manuals search engine

Playing a CD

If the ignition or radio is turned off, with a CD in the player, it stays in the player. When the ignition or radio is turned on, the CD starts playing where it stopped, if it was the last selected audio source.

When a CD is inserted, the CD symbol displays on the CD. As each new track starts to play, the track number displays.

The CD player can play the smaller 3 inch (8 cm) single CDs with an adapter ring. Full-size CDs and the smaller CDs are loaded in the same manner.

If playing a CD-R, the sound quality can be reduced due to CD-R quality, the method of recording, the quality of the music that has been recorded, and the way the CD-R has been handled. There can be an increase in skipping, difficulty in finding tracks, and/or difficulty in loading and ejecting. If these problems occur, check the bottom surface of the CD. If the surface of the CD is damaged, such as cracked, broken, or scratched, the CD will not play properly. If the surface of the CD is soiled, see *Care of Your CDs on page 219* for more information.

If there is no apparent damage, try a known good CD.

Do not add any label to a CD, it could get caught in the CD player. If a CD is recorded on a personal computer and a description label is needed, try labeling the top of the recorded CD with a marking pen.

Notice: **If a label is added to a CD, or more than one CD is inserted into the slot at a time, or an attempt is made to play scratched or damaged CDs, the CD player could be damaged. While using the CD player, use only CDs in good condition without any label, load one CD at a time, and keep the CD player and the loading slot free of foreign materials, liquids, and debris.**

If an error displays, see “CD Messages” later in this section.

LOAD CD ⏏ : Press the LOAD side of this button to load CDs into the CD player. This CD player holds up to six CDs.

To insert one CD, do the following:

1. Turn the ignition on.
2. Press and release the LOAD button.
3. Wait for the indicator light, located to the right of the slot, to turn green.

Downloaded from www.Manualslib.com manuals search engine

4. Load a CD. Insert the CD partway into the slot, label side up. The player pulls the CD in.

To insert multiple CDs, do the following:

1. Turn the ignition on.
2. Press and hold the LOAD button for two seconds.

   A beep sounds and the indicator light, located to the right of the slot, begins to flash.
3. Once the light stops flashing and turns green, load a CD. Insert the CD partway into the slot, label side up. The player pulls the CD in.

   Once the CD is loaded, the light begins flashing again. Once the light stops flashing and turns green you can load another CD. The CD player takes up to six CDs. Do not try to load more than six.

To load more than one CD but less than six, complete Steps 1 through 3. When finished loading CDs, the radio begins to play the last CD loaded.

If more than one CD has been loaded, a number for each CD displays.

Playing a Specific Loaded CD

For every CD loaded, a number appears on the display. To play a specific CD, first press the CD AUX button, then press the numbered pushbutton that corresponds to the CD. A small bar appears under the CD number that is playing and the track number displays.

If an error appears on the display, see “CD Messages” later in this section.

LOAD CD ⏏ (Eject): Press the CD eject side of this button to eject a CD(s). To eject the CD that is currently playing, press and release this button. To eject multiple CDs, press and hold this button for two seconds. A beep sounds and the indicator light flashes while a CD is being ejected.

REMOVE CD displays. The CD can be removed. If the CD is not removed, after 25 seconds, the CD automatically pulls back into the player. If the CD is pushed back into the player, before the 25 second time period is complete, the player senses an error and tries to eject the CD several times before stopping.

Downloaded from www.Manualslib.com manuals search engine

Do not repeatedly press the CD eject button to eject a CD after trying to push it in manually. The player's 25-second eject timer resets at each press of eject, causing the player to not eject the CD until the 25-second time period has elapsed.

Once the player stops and the CD is ejected, remove the CD. After removing the CD, push the PWR knob off and then on again, or wait for the system to reset. This clears the CD-sensing feature and enables CDs to be loaded into the player again.

≪ **REV (Reverse):** Press and hold this button to reverse quickly within a track. Sound is heard at a reduced volume. Release this button to play the passage. The elapsed time of the track displays.

FWD ≫ (Forward): Press and hold this button to advance quickly within a track. Sound is heard at a reduced volume. Release this button to play the passage. The elapsed time of the track displays.

RPT (Repeat): With the repeat setting, one track or an entire CD can be repeated.

To use repeat, do the following:

- To repeat the track you are listening to, press and release the RPT button. RPT displays. Press RPT again to turn off repeat play.
- To repeat the CD you are listening to, press and hold the RPT button for two seconds. RPT displays. Press RPT again to turn off repeat play.

RDM (Random): With the random setting, the tracks can be listened to in random order, rather than sequential order, on one CD or on all of the CDs.

To use random, do one of the following:

- To play the tracks on the CD in random order, press and release the RDM button. RANDOM ONE displays. Press RDM again to turn off random play.
- To play the tracks on all of the CDs that are loaded in random order, press and hold RDM for more than two seconds. A beep sounds and RANDOM ALL displays. Press RDM again to turn off random play.

Downloaded from www.Manualslib.com manuals search engine

AUTO EQ (Automatic Equalization): Press AUTO EQ to select the equalization setting while playing a CD. The equalization is stored whenever a CD is played. For more information on AUTO EQ, see “AUTO EQ” listed previously in this section.

⊲ **SEEK** ⊳ **:** Press the left arrow to go to the start of the current track, if more than ten seconds have played. Press the right arrow to go to the next track. If either arrow is held or pressed more than once, the player continues moving backward or forward through the CD.

⊲ **SCAN** ⊳ **:** To scan one CD, press and hold either SCAN arrow for more than two seconds until SCAN displays and a beep sounds. The radio goes to the next track, plays for 10 seconds, then goes to the next track. Press either SCAN arrow again, to stop scanning.

To scan all loaded CDs, press and hold either SCAN arrow for more than four seconds until CD SCAN displays and a beep sounds. Use this feature to listen to 10 seconds of the first track of each loaded CD. Press either SCAN arrow again, to stop scanning.

RCL (Recall): Press this button to see how long the current track has been playing. To change the default on the display, track, and elapsed time, press the button until the desired display is shown, then hold the button until the display flashes. The selected display becomes the default.

AM/FM: Press this button to listen to the radio when a CD is playing. The inactive CD(s) remains inside the radio for future listening.

CD AUX (Auxiliary): Press this button to play a CD when listening to the radio.

Using Song List Mode

The six-disc CD changer has a feature called song list. This feature is capable of saving 20 track selections.

To save tracks into the song list feature, perform the following steps:

1. Turn the CD player on and load it with at least one CD. See “LOAD CD” listed previously in this section for more information.
2. Check to see that the CD changer is not in song list mode. S-LIST should not display. If S-LIST displays, press the SONG LIST button to turn it off.

Downloaded from www.Manualslib.com manuals search engine

3. Select the desired CD by pressing the numbered pushbutton and then use the SEEK SCAN right arrow to locate the track to be saved. The track begins to play.
4. Press and hold the SONG LIST button to save the track into memory. When SONG LIST is pressed, one beep sounds. After two seconds of continuously pressing the SONG LIST button, two beeps sound to confirm the track has been saved.
5. Repeat Steps 3 and 4 for saving other selections.

S-LIST FULL displays if you try to save more than 20 selections.

To play the song list, press the SONG LIST button. One beep sounds and S-LIST displays. The recorded tracks begins to play in the order they were saved.

Seek through the song list by using the SEEK SCAN arrows. Seeking past the last saved track returns to the first saved track.

To delete tracks from the song list, perform the following steps:

1. Turn the CD player on.
2. Press the SONG LIST button to turn song list on. S-LIST displays.
3. Press the SEEK SCAN arrows to select the desired track to be deleted.
4. Press and hold the SONG LIST button for two seconds. When SONG LIST is pressed, one beep sounds. After two seconds of continuously pressing the SONG LIST button, two beeps sound to confirm the track has been deleted.

After a track has been deleted, the remaining tracks are moved up the list. When another track is added to the song list, the track is added to the end of the list.

Downloaded from www.Manualslib.com manuals search engine

To delete the entire song list, perform the following steps:

1. Turn the CD player on.
2. Press the SONG LIST button to turn song list on. S-LIST displays.
3. Press and hold the SONG LIST button for more than four seconds. One beep sounds, followed by two beeps after two seconds, and a final beep sounds after four seconds. S-LIST EMPTY displays indicating the song list has been deleted.

If a CD is ejected, and the song list contains saved tracks from that CD, those tracks are automatically deleted from the song list. Any tracks saved to the song list again are added to the bottom of the list.

To end song list mode, press the SONG LIST button. One beep sounds and S-LIST is removed from the display.

CD Messages

CHECK CD: If this message displays and/or the CD comes out, it could be for one of the following reasons:

- It is very hot. When the temperature returns to normal, the CD should play.
- You are driving on a very rough road. When the road becomes smoother, the CD should play.
- The CD is dirty, scratched, wet, or upside down.
- The air is very humid. If so, wait about an hour and try again.
- There could have been a problem while burning the CD.
- The label could be caught in the CD player.

If the CD is not playing correctly, for any other reason, try a known good CD.

If any error occurs repeatedly or if an error cannot be corrected, contact your dealer. If the radio displays an error message, write it down and provide it to your dealer when reporting the problem.

Downloaded from www.Manualslib.com manuals search engine

Using an MP3

MP3 CD-R Disc

MP3 Format

If you burn your own MP3 disc on a personal computer:

- Make sure the MP3 files are recorded on a CD-R disc.
- Make sure to finalize the disc when burning an MP3 disc, using multiple sessions. It is usually better to burn the disc all at once.
- Files can be recorded with a variety of fixed or variable bit rates. Song title, artist name, and album are available for display by the radio when recorded using ID3 tags version 1 and 2.
- Do not mix standard audio and MP3 files on one disc.
- Make sure playlists have a .mp3 or .wpl extension, other file extensions might not work.
- Create a folder structure that makes it easy to find songs while driving. Organize songs by albums using one folder for each album. Each folder or album should contain 18 songs or less.

The player is able to read and play a maximum of 50 folders, 50 playlists, 10 sessions, and 255 files. Long file names, folder names, or playlist names can use more disc memory space than necessary. To conserve space on the disc, minimize the length of the file, folder, or playlist names. You can also play an MP3 CD that was recorded using no file folders. The system can support up to 11 folders in depth, though, keep the depth of the folders to a minimum in order to keep down the complexity and confusion in trying to locate a particular folder during playback. If a CD contains more than the maximum of 50 folders, 50 playlists, 10 sessions, and 255 files the player lets you access and navigate up to the maximum, but all items over the maximum are ignored.

Root Directory

The root directory is treated as a folder. If the root directory has compressed audio files, the directory is displayed as F1 ROOT. All files contained directly under the root directory are accessed prior to any root directory folders. However, playlists (Px) are always be accessed before root folders or files.

Downloaded from www.Manualslib.com manuals search engine

Empty Directory or Folder

If a root directory or a folder exists somewhere in the file structure that contains only folders/subfolders and no compressed files directly beneath them, the player advances to the next folder in the file structure that contains compressed audio files. The empty folder does not display.

No Folder

When the CD contains only compressed files, the files are located under the root folder. The next and previous folder functions do not function on a CD that was recorded without folders or playlists. When displaying the name of the folder the radio displays ROOT.

When the CD contains only playlists and compressed audio files, but no folders, all files are located under the root folder. The folder down and the folder up buttons searches playlists (Px) first and then go to the root folder. When the radio displays the name of the folder the radio displays ROOT.

Order of Play

Tracks are played in the following order:

- Play begins from the first track in the first playlist and continues sequentially through all tracks in each playlist. When the last track of the last playlist has played, play continues from the first track of the first playlist.
- If the CD does not contain any playlists, then play begins from the first track under the root directory. When all tracks from the root directory have played, play continues from files according to their numerical listing. After playing the last track from the last folder, play begins again at the first track of the first folder or root directory.

When play enters a new folder, the display does not automatically show the new folder name unless you have chosen the folder mode as the default display. See RCL later in this section for more information. The new track name displays.

Downloaded from www.Manualslib.com manuals search engine

File System and Naming

The song name that displays is the song name that is contained in the ID3 tag. If the song name is not present in the ID3 tag, then the radio displays the file name without the extension (such as .mp3) as the track name.

Track names longer than 39 characters or 3 pages are shortened. The display does not show parts of words on the last page of text and the extension of the filename does not display.

Preprogrammed Playlists

Preprogrammed playlists which were created by WinAmp™, MusicMatch™, or Real Jukebox™ software can be accessed, however, they cannot be edited using the radio. These playlists are treated as special folders containing compressed audio song files.

Playing an MP3

Insert a CD partway into the slot, label side up. The player pulls it in, and READING DISC displays. The CD should begin playing and the CD symbol displays. If you want to insert a CD with the ignition off, first press the eject button or the RCL button.

If the ignition or radio is turned off with a CD in the player it stays in the player. When the ignition or radio is turned on, the CD starts to play where it stopped, if it was the last selected audio source.

As each new track starts to play, the track number displays.

The CD player can play the smaller 3 inch (8 cm) single CDs with an adapter ring. Full-size CDs and the smaller CDs are loaded in the same manner.

If playing a CD-R, the sound quality can be reduced due to CD-R quality, the method of recording, the quality of the music that has been recorded, and the way the CD-R has been handled. There can be an increase in skipping, difficulty in finding tracks, and/or difficulty in loading and ejecting. If these problems occur, check the bottom surface of the CD. If the surface of the CD is damaged, such as cracked, broken, or scratched, the CD will not play properly. If the surface of the CD is soiled, see *Care of Your CDs on page 219* for more information.

If there is no apparent damage, try a known good CD.

Downloaded from www.Manualslib.com manuals search engine

Do not add any label to a CD, it could get caught in the CD player. If a CD is recorded on a personal computer and a description label is needed, try labeling the top of the recorded CD with a marking pen.

Notice: **If a label is added to a CD, or more than one CD is inserted into the slot at a time, or an attempt is made to play scratched or damaged CDs, the CD player could be damaged. While using the CD player, use only CDs in good condition without any label, load one CD at a time, and keep the CD player and the loading slot free of foreign materials, liquids, and debris.**

If an error displays, see “CD Messages” later in this section.

▷▷ **1 (Forward):** Press and hold this pushbutton to advance quickly within a track. Press and hold this pushbutton for less than two seconds to advance at 10 times the normal playing speed. Press and hold it for more than two seconds to advance at 20 times the normal playing speed. Release this pushbutton to play the track. FWD and the elapsed time of the track displays.

RDM 2 (Random): To repeat the tracks in the current folder or playlist, press and release this pushbutton. FOLDER RANDOM displays. Once all of the tracks in the current folder or playlist have been played, the system moves on to the next folder or playlist and plays all of the tracks in random order.

To repeat the tracks on the CD, press and hold this pushbutton for two seconds. A beep sounds and DISC RANDOM displays. This feature does not work with playlists.

While in random, pressing and releasing either SEEK arrow goes to the next or previous random track.

Press and release this pushbutton again to turn off random play. NO RANDOM displays.

3 (Next Folder): Press this pushbutton to go to the first track in the next folder or playlist. If the disc contains playlists, it goes through the playlist, then the folders. Pressing this button while in folder random mode takes you to the next folder and randomizes the tracks in that folder. This function does not work on a CD that does not contain folders or playlists.

Downloaded from www.Manualslib.com manuals search engine

4 ◁◁ (Reverse): Press and hold this pushbutton to reverse quickly within a track. Press and hold this pushbutton for less than two seconds to reverse at 10 times the normal playing speed. Press and hold it for more than two seconds to reverse at 20 times the normal playing speed. Release this pushbutton to play the track. REV and the elapsed time of the track appears on the display. If this pushbutton is pressed for more than 20 seconds, the radio stops reversing and begins to play.

6 (Previous Folder): Press this pushbutton to go to the first track in the previous folder or playlist. If the disc contains playlists, it goes through the playlist, then the folders. Pressing this pushbutton while in folder random mode takes you to the previous folder and randomizes the tracks in that folder. This function does not work on a CD that does not contain folders or playlists.

△ SEEK ▽: Press the up arrow to go to the start of the next track. Press the down arrow to go to the start of the previous track. Pressing either arrow for more than two seconds searches the previous or next tracks at two tracks per second. When the desired track number displays, release the arrow to stop searching and to play the track.

TUNE: Turn this knob to fast track reverse or advance through tracks in all folders or playlists. The track number and file name appears on the display for each track. Turn this knob while in random to fast track reverse or advance the tracks in sequential order.

Downloaded from www.Manualslib.com manuals search engine

RCL (Recall): Push this button to switch between track mode, folder, or playlist mode, and time of day mode. The display shows only 13 characters, but there can be up to three pages of text. If there are more than 13 characters in the song, folder, or playlist name pushing this button within two seconds takes you to the next page of text. If there are no other pages to be shown, pushing this button within two seconds takes you to the next display mode.

Track mode displays the current track number and the ID3 tag song name.

Folder/playlist mode displays the current folder or playlist number and the folder/playlist name.

Time of day mode displays the time of day and the ID3 tag song name.

To change the default on the display, push this button until you see the desired display, then hold this button for two seconds. The radio produces one beep and the selected display is now the default.

INFO (Information): INFO displays whenever a current track has ID3 tag information. Press this button to display the artist name and album contained in the tag. INFO disappears from the display when the information in the ID3 tag has finished.

BAND: Press this button to listen to the radio when a CD is playing. The inactive CD remains inside the radio for future listening.

CD AUX (Auxiliary): Press this button to play a CD when listening to the radio. The CD symbol displays when a CD is loaded.

⏏ **(Eject):** Press this button to eject a CD. Eject may be activated with either the ignition or radio off. CDs can be loaded with the radio and ignition off if this button is pressed first.

Downloaded from www.Manualslib.com manuals search engine

XM Radio Messages

Radio Display Message	Condition	Action Required
XL (Explicit Language Channels)	XL on the radio display, after the channel name, indicates content with explicit language.	These channels, or any others, can be blocked at a customer's request, by calling 1-800-852-XMXM (9696).
Updating	Updating encryption code	The encryption code in the receiver is being updated, and no action is required. This process should take no longer than 30 seconds.
No Signal	Loss of signal	The system is functioning correctly, but the vehicle is in a location that is blocking the XM™ signal. When the vehicle moves into an open area, the signal should return.
Loading XM	Acquiring channel audio (after a four second delay)	The audio system is acquiring and processing audio and text data. No action is needed. This message should disappear shortly.
CH Off Air	Channel not in service	This channel is not currently in service. Tune to another channel.
CH Unavail	Channel no longer available	This previously assigned channel is no longer assigned. Tune to another station. If this station was one of the presets, choose another station for that preset button.
No Info	Artist Name/Feature not available	No artist information is available at this time on this channel. The system is working properly.

Downloaded from www.Manualslib.com manuals search engine

Radio Display Message	Condition	Action Required
No Info	Song/Program Title not available	No song title information is available at this time on this channel. The system is working properly.
No Info	Category Name not available	No category information is available at this time on this channel. The system is working properly.
No Info	No Text/Informational message available	No text or informational messages are available at this time on this channel. The system is working properly.
Not Found	No channel available for the chosen category	There are no channels available for the selected category. The system is working properly.
XM Locked	Theft lock active	The XM™ receiver in the vehicle could have previously been in another vehicle. For security purposes, XM™ receivers cannot be swapped between vehicles. If this message is received after having your vehicle serviced, check with the servicing facility.
Radio ID	Radio ID label (channel 0)	If tuned to channel 0, this message alternates with the XM™ Radio eight digit radio ID label. This label is needed to activate the service.
Unknown	Radio ID not known (should only be if hardware failure)	If this message is received when tuned to channel 0, there could be a receiver fault. Consult with your dealer.
Chk XMRcvr	Hardware failure	If this message does not clear within a short period of time, the receiver could have a fault. Consult with your dealer.

Downloaded from www.Manualslib.com manuals search engine

Radio Reception

Frequency interference and static during normal radio reception can occur if items such as cellphone chargers, vehicle convenience accessories, and external electronic devices are plugged into the accessory power outlet. If there is interference or static, unplug the item from the accessory power outlet.

AM

The range for most AM stations is greater than for FM, especially at night. The longer range can cause station frequencies to interfere with each other. For better radio reception, most AM radio stations boost the power levels during the day, and then reduce these levels during the night. Static can also occur when things like storms and power lines interfere with radio reception. When this happens, try reducing the treble on your radio.

FM Stereo

FM stereo gives the best sound, but FM signals reach about 10 to 40 miles (16 to 65 km). Tall buildings or hills can interfere with FM signals, causing the sound to fade in and out.

XM™ Satellite Radio Service

XM™ Satellite Radio Service gives digital radio reception from coast-to-coast in the 48 contiguous United States, and in Canada. Just as with FM, tall buildings or hills can interfere with satellite radio signals, causing the sound to fade in and out. In addition, traveling or standing under heavy foliage, bridges, garages, or tunnels can cause loss of the XM™ signal for a period of time. The radio could display NO XM SIGNAL to indicate interference.

Downloaded from www.Manualslib.com manuals search engine

Care of Your CDs

Handle CDs carefully. Store them in their original cases or other protective cases and away from direct sunlight and dust. The CD player scans the bottom surface of the disc. If the surface of a CD is damaged, such as cracked, broken, or scratched, the CD will not play properly or not at all. If the surface of a CD is soiled, take a soft, lint free cloth or dampen a clean, soft cloth in a mild, neutral detergent solution mixed with water, and clean it. Make sure the wiping process starts from the center to the edge.

Do not touch the bottom side of a CD while handling it; this could damage the surface. Pick up CDs by grasping the outer edges or the edge of the hole and the outer edge.

Care of the CD Player

Do not use CD lens cleaners for CD players because the lens of the CD optics can become contaminated by lubricants.

Fixed Mast Antenna

The fixed mast antenna can withstand most car washes without being damaged. If the mast should ever become slightly bent, straighten it out by hand. If the mast is badly bent, replace it.

Check occasionally to make sure the mast is still tightened to the antenna base located on the roof of the vehicle. If tightening is required, tighten by hand.

XM™ Satellite Radio Antenna System

The XM™ Satellite Radio antenna is located on the roof of your vehicle. Keep this antenna clear of snow and ice build up for clear radio reception.

A vehicle with a sunroof might not get the best performance from the XM™ system if the sunroof is open.

Loading items onto the roof of your vehicle can interfere with the performance of the XM™ system. Make sure the XM™ Satellite Radio antenna is not obstructed.

Downloaded from www.Manualslib.com manuals search engine

NOTES

Downloaded from www.Manualslib.com manuals search engine

Section 4 Driving Your Vehicle

Your Driving, the Road, and Your Vehicle 222
Defensive Driving 222
Drunken Driving 223
Control of a Vehicle 226
Braking 226
Anti-Lock Brake System (ABS) 227
Braking in Emergencies 229
Traction Control System (TCS) 230
StabiliTrak® System 231
Panic Brake Assist 231
Steering 232
Off-Road Recovery 234
Passing 235
Loss of Control 237
Driving at Night 238
Driving in Rain and on Wet Roads 239
City Driving 242
Freeway Driving 243
Before Leaving on a Long Trip 244
Highway Hypnosis 245
Hill and Mountain Roads 246
Winter Driving 248
If Your Vehicle is Stuck in Sand, Mud, Ice, or Snow 252
Rocking Your Vehicle to Get It Out 253
Loading Your Vehicle 253

Towing 259
Towing Your Vehicle 259
Recreational Vehicle Towing 259
Towing a Trailer 261

Downloaded from www.Manualslib.com manuals search engine

Your Driving, the Road, and Your Vehicle

Defensive Driving

The best advice anyone can give about driving is: Drive defensively.

Please start with a very important safety device in your vehicle: Buckle up. See *Safety Belts: They Are for Everyone on page 18*.

⚠ CAUTION:

Defensive driving really means "Be ready for anything." On city streets, rural roads, or expressways, it means "Always expect the unexpected." Assume that pedestrians or other drivers are going to be careless and make mistakes. Anticipate what they might do and be ready. Rear-end collisions are about the most preventable of accidents. Yet they are common. Allow enough following distance. Defensive driving requires that a driver concentrate on the driving task. Anything that distracts from the driving task makes proper defensive driving more difficult and can even cause a collision, with resulting injury. Ask a passenger to help do these things, or pull off the road in a safe place to do them. These simple defensive driving techniques could save your life.

Downloaded from www.Manualslib.com manuals search engine

Drunken Driving

Death and injury associated with drinking and driving is a national tragedy. It is the number one contributor to the highway death toll, claiming thousands of victims every year.

Alcohol affects four things that anyone needs to drive a vehicle:

- Judgment
- Muscular Coordination
- Vision
- Attentiveness

Police records show that almost half of all motor vehicle-related deaths involve alcohol. In most cases, these deaths are the result of someone who was drinking and driving. In recent years, more than 16,000 annual motor vehicle-related deaths have been associated with the use of alcohol, with more than 300,000 people injured.

Many adults — by some estimates, nearly half the adult population — choose never to drink alcohol, so they never drive after drinking. For persons under 21, it is against the law in every U.S. state to drink alcohol. There are good medical, psychological, and developmental reasons for these laws.

The obvious way to eliminate the leading highway safety problem is for people never to drink alcohol and then drive. But what if people do? How much is “too much” if someone plans to drive? It is a lot less than many might think. Although it depends on each person and situation, here is some general information on the problem.

The Blood Alcohol Concentration (BAC) of someone who is drinking depends upon four things:

- The amount of alcohol consumed
- The drinker’s body weight
- The amount of food that is consumed before and during drinking
- The length of time it has taken the drinker to consume the alcohol

Downloaded from www.Manualslib.com manuals search engine

According to the American Medical Association, a 180 lb (82 kg) person who drinks three 12 ounce (355 ml) bottles of beer in an hour will end up with a BAC of about 0.06 percent. The person would reach the same BAC by drinking three 4 ounce (120 ml) glasses of wine or three mixed drinks if each had 1-1/2 ounces (45 ml) of liquors like whiskey, gin, or vodka.

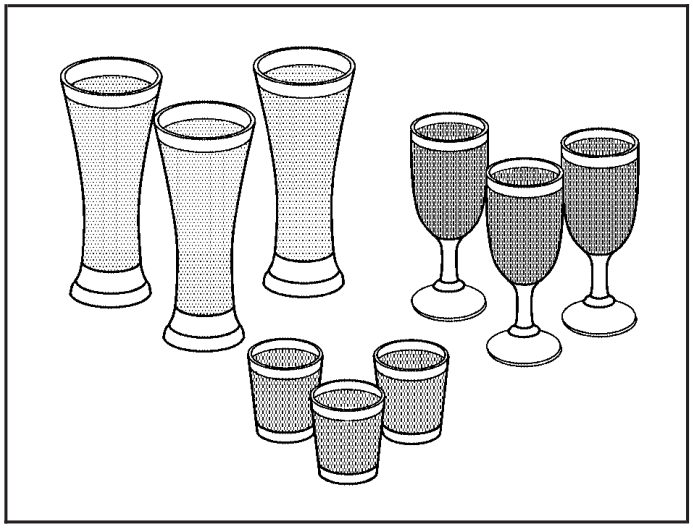

It is the amount of alcohol that counts. For example, if the same person drank three double martinis (3 ounces or 90 ml of liquor each) within an hour, the person's BAC would be close to 0.12 percent. A person who consumes food just before or during drinking will have a somewhat lower BAC level.

There is a gender difference, too. Women generally have a lower relative percentage of body water than men. Since alcohol is carried in body water, this means that a woman generally will reach a higher BAC level than a man of her same body weight will when each has the same number of drinks.

The law in most U.S. states, and throughout Canada, sets the legal limit at 0.08 percent. In some other countries, the limit is even lower. For example, it is 0.05 percent in both France and Germany. The BAC limit for all commercial drivers in the United States is 0.04 percent.

The BAC will be over 0.10 percent after three to six drinks (in one hour). Of course, as we have seen, it depends on how much alcohol is in the drinks, and how quickly the person drinks them.

Downloaded from www.Manualslib.com manuals search engine

But the ability to drive is affected well below a BAC of 0.10 percent. Research shows that the driving skills of many people are impaired at a BAC approaching 0.05 percent, and that the effects are worse at night. All drivers are impaired at BAC levels above 0.05 percent. Statistics show that the chance of being in a collision increases sharply for drivers who have a BAC of 0.05 percent or above. A driver with a BAC level of 0.06 percent has doubled his or her chance of having a collision. At a BAC level of 0.10 percent, the chance of this driver having a collision is 12 times greater; at a level of 0.15 percent, the chance is 25 times greater!

The body takes about an hour to rid itself of the alcohol in one drink. No amount of coffee or number of cold showers will speed that up. “I will be careful” is not the right answer. What if there is an emergency, a need to take sudden action, as when a child darts into the street? A person with even a moderate BAC might not be able to react quickly enough to avoid the collision.

There is something else about drinking and driving that many people do not know. Medical research shows that alcohol in a person’s system can make crash injuries worse, especially injuries to the brain, spinal cord, or heart. This means that when anyone who has been drinking — driver or passenger — is in a crash, that person’s chance of being killed or permanently disabled is higher than if the person had not been drinking.

⚠ CAUTION:

Drinking and then driving is very dangerous. Your reflexes, perceptions, attentiveness, and judgment can be affected by even a small amount of alcohol. You can have a serious — or even fatal — collision if you drive after drinking. Please do not drink and drive or ride with a driver who has been drinking. Ride home in a cab; or if you are with a group, designate a driver who will not drink.

Downloaded from www.Manualslib.com manuals search engine

Control of a Vehicle

You have three systems that make your vehicle go where you want it to go. They are the brakes, the steering, and the accelerator. All three systems have to do their work at the places where the tires meet the road.

Sometimes, as when you are driving on snow or ice, it is easy to ask more of those control systems than the tires and road can provide. That means you can lose control of your vehicle.

Adding non-GM accessories can affect your vehicle's performance. See *Accessories and Modifications on page 272*.

Braking

See *Brake System Warning Light on page 166*.

Braking action involves perception time and reaction time.

First, you have to decide to push on the brake pedal. That is perception time. Then you have to bring up your foot and do it. That is reaction time.

Average reaction time is about three-fourths of a second. But that is only an average. It might be less with one driver and as long as two or three seconds or more with another. Age, physical condition, alertness, coordination, and eyesight all play a part. So do alcohol, drugs, and frustration. But even in three-fourths of a second, a vehicle moving at 60 mph (100 km/h) travels 66 feet (20 m). That could be a lot of distance in an emergency, so keeping enough space between your vehicle and others is important.

And, of course, actual stopping distances vary greatly with the surface of the road, whether it is pavement or gravel; the condition of the road, whether it is wet, dry, or icy; tire tread; the condition of the brakes; the weight of the vehicle; and the amount of brake force applied.

Downloaded from www.Manualslib.com manuals search engine

Avoid needless heavy braking. Some people drive in spurts — heavy acceleration followed by heavy braking — rather than keeping pace with traffic. This is a mistake. The brakes may not have time to cool between hard stops. The brakes will wear out much faster if you do a lot of heavy braking. If you keep pace with the traffic and allow realistic following distances, you will eliminate a lot of unnecessary braking. That means better braking and longer brake life.

If your vehicle's engine ever stops while you are driving, brake normally but do not pump the brakes. If you do, the pedal may get harder to push down. If the engine stops, you will still have some power brake assist. But you will use it when you brake. Once the power assist is used up, it may take longer to stop and the brake pedal will be harder to push.

Adding non-GM accessories can affect your vehicle's performance. See *Accessories and Modifications on page 272*.

Anti-Lock Brake System (ABS)

Your vehicle may have the Anti-Lock Brake System (ABS), an advanced electronic braking system that will help prevent a braking skid.

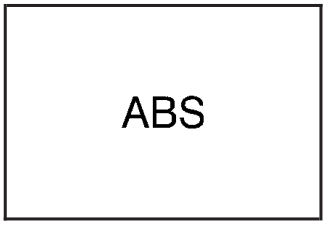

United States

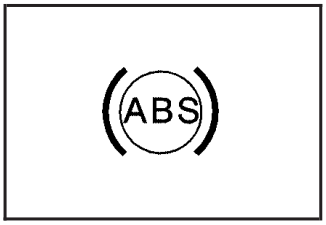

Canada

If your vehicle has ABS, this warning light on the instrument panel will come on briefly when you start your vehicle.

When you start your engine, or when you begin to drive away, ABS will check itself. You may hear a momentary motor or clicking noise while this test is going on, and you may even notice that your brake pedal moves or pulses a little. This is normal.

If there is a problem with ABS, the anti-lock brake system warning light will stay on. See *Anti-Lock Brake System Warning Light on page 167*.

Downloaded from www.Manualslib.com manuals search engine

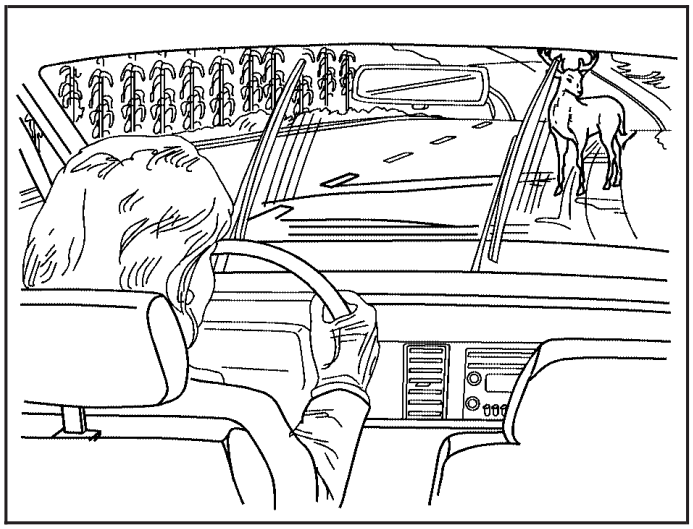

Let us say the road is wet and you are driving safely. Suddenly, an animal jumps out in front of you. You slam on the brakes and continue braking. Here is what happens with ABS:

A computer senses that wheels are slowing down. If one of the wheels is about to stop rolling, the computer will separately work the brakes at each front wheel and at both rear wheels.

ABS can change the brake pressure faster than any driver could. The computer is programmed to make the most of available tire and road conditions. This can help you steer around the obstacle while braking hard.

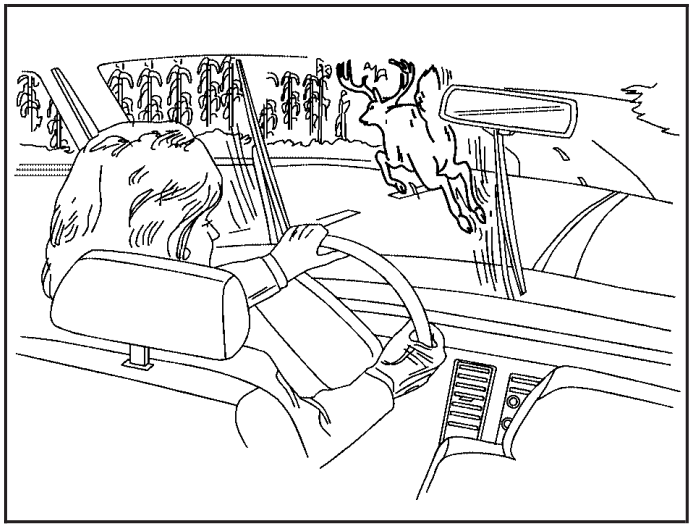

As you brake, your computer keeps receiving updates on wheel speed and controls braking pressure accordingly.

Downloaded from www.Manualslib.com manuals search engine

If your vehicle has the vehicle stability control system, it includes a brake assist system which provides more powerful braking during a sudden, hard brake application. See “Vehicle Stability Control System” under *Traction Control System (TCS) on page 230*.

Remember: ABS does not change the time you need to get your foot up to the brake pedal or always decrease stopping distance. If you get too close to the vehicle in front of you, you will not have time to apply your brakes if that vehicle suddenly slows or stops. Always leave enough room up ahead to stop, even though you have ABS.

Using ABS

Do not pump the brakes. Just hold the brake pedal down firmly and let anti-lock work for you. You may feel a slight brake pedal pulsation or notice some noise, but this is normal.

Braking in Emergencies

At some time, nearly every driver gets into a situation that requires hard braking.

If you have ABS, you can steer and brake at the same time. However, if you do not have ABS, your first reaction — to hit the brake pedal hard and hold it down — may be the wrong thing to do. Your wheels can stop rolling. Once they do, the vehicle cannot respond to your steering. Momentum will carry it in whatever direction it was headed when the wheels stopped rolling. That could be off the road, into the very thing you were trying to avoid, or into traffic.

If you do not have ABS, use a “squeeze” braking technique. This will give you maximum braking while maintaining steering control. You can do this by pushing on the brake pedal with steadily increasing pressure.

In an emergency, you will probably want to squeeze the brakes hard without locking the wheels. If you hear or feel the wheels sliding, ease off the brake pedal. This will help you retain steering control. If you do have ABS, it is different. See *Anti-Lock Brake System (ABS) on page 227*.

In many emergencies, steering can help you more than even the very best braking.

Downloaded from www.Manualslib.com manuals search engine

Traction Control System (TCS)

Your vehicle may have a traction control system that limits wheel spin. This is especially useful in slippery road conditions. The system operates only if it senses that one or both of the front wheels are spinning or beginning to lose traction. When this happens, the system works the front brakes and reduces engine power to limit wheel spin.

You may feel or hear the system working, but this is normal. Leave the system on during ordinary driving so that it can operate when needed. When the ignition is turned to ON, the system automatically turns on.

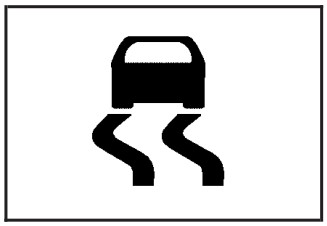

This light should come on briefly when you start the engine.

If it stays on or comes on while you are driving, there is a problem with your traction control system.

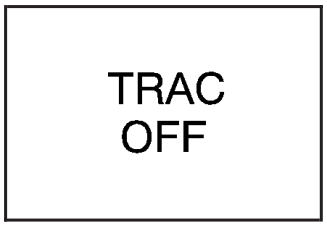

The TRAC OFF button is located to the left of the steering wheel below the instrument panel cluster.

When getting the vehicle out of mud or newly fallen snow, turn off the traction control system. The system that controls engine performance interferes with the process of freeing the front wheels. To turn off traction control, press the TRAC OFF button. The traction control system warning light will come on. The vehicle stability control system (StabiliTrak®) is always activated, even when the traction control system is turned off. To turn the traction control system back on, press the TRAC OFF button again. The traction control system warning light will go off. See *Traction Control System (TCS) Warning Light on page 168* for more information.

Adding non-GM accessories can affect your vehicle's performance. See *Accessories and Modifications on page 272* for more information.

Downloaded from www.Manualslib.com manuals search engine

StabiliTrak® System

Your vehicle may have this feature. The StabiliTrak® system helps provide integrated control of the systems such as anti-lock brake system, traction control and engine control. This system automatically controls the brakes and engine to help prevent the vehicle from skidding when cornering on a slippery road surface or turning the steering wheel abruptly.

This system will activate when your vehicle speed reaches or exceeds 9 mph (15 km/h), and will deactivate when the vehicle speed reduces to below 9 mph (15 km/h).

You may hear a sound in the engine compartment for a few seconds when the engine is started or just after the vehicle begins to move. This means that the system is in the self-check mode, but does not indicate a malfunction.

If the vehicle is going to skid during driving, the traction control system warning light will blink and an alarm will sound intermittently. Adjust your driving accordingly.

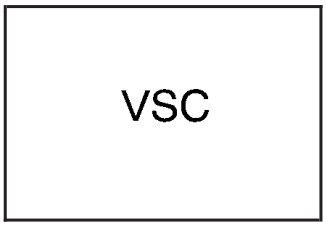

This light warns that there is a problem somewhere in the traction control system or StabiliTrak®.

Panic Brake Assist

Your vehicle has a panic brake assist system that monitors the intention of the driver while braking. If the system senses that the driver has applied hard/fast pressure to the brake pedal, the system will generate additional pressure, making it easier for the driver to maintain brake application. When this happens the brake pedal will feel easier to push. Just hold the brake pedal down firmly and let the system work for you. You may feel the brakes vibrate, or you may notice some noise but this is normal. The brakes will return to normal operation after the brake pedal has been released.

The brake assist system becomes operational after the vehicle has accelerated to a speed in excess of approximately 6 mph (10 km/h). It stops operating when the vehicle decelerates to a speed below approximately 3 mph (5 km/h).

Downloaded from www.Manualslib.com manuals search engine

Steering

Power Steering

If you lose power steering assist because the engine stops or the system is not functioning, you can steer but it will take much more effort.

Steering Tips

It is important to take curves at a reasonable speed.

A lot of the “driver lost control” accidents mentioned on the news happen on curves.

Here is why:

Experienced driver or beginner, each of us is subject to the same laws of physics when driving on curves. The traction of the tires against the road surface makes it possible for the vehicle to change its path when you turn the front wheels. If there is no traction, inertia will keep the vehicle going in the same direction. If you have ever tried to steer a vehicle on wet ice, you will understand this.

The traction you can get in a curve depends on the condition of your tires and the road surface, the angle at which the curve is banked, and your speed. While you are in a curve, speed is the one factor you can control.

Suppose you are steering through a sharp curve. Then you suddenly apply the brakes. Both control systems — steering and braking — have to do their work where the tires meet the road. Unless you have four-wheel anti-lock brakes, adding the hard braking can demand too much of those places. You can lose control.

The same thing can happen if you are steering through a sharp curve and you suddenly accelerate. Those two control systems — steering and acceleration — can overwhelm those places where the tires meet the road and make you lose control.

What should you do if this ever happens? Ease up on the brake or accelerator pedal, steer the vehicle the way you want it to go, and slow down.

Downloaded from www.Manualslib.com manuals search engine

Speed limit signs near curves warn that you should adjust your speed. Of course, the posted speeds are based on good weather and road conditions. Under less favorable conditions you will want to go slower.

If you need to reduce your speed as you approach a curve, do it before you enter the curve, while your front wheels are straight ahead.

Try to adjust your speed so you can “drive” through the curve. Maintain a reasonable, steady speed. Wait to accelerate until you are out of the curve, and then accelerate gently into the straightaway.

Adding non-GM accessories can affect your vehicle’s performance. See *Accessories and Modifications on page 272*.

Steering in Emergencies

There are times when steering can be more effective than braking. For example, you come over a hill and find a truck stopped in your lane, or a car suddenly pulls out from nowhere, or a child darts out from between parked cars and stops right in front of you. You can avoid these problems by braking — if you can stop in time. But sometimes you cannot; there is not room. That is the time for evasive action — steering around the problem.

Your vehicle can perform very well in emergencies like these. First apply your brakes — but, unless you have anti-lock brakes, not enough to lock your wheels.

See *Braking on page 226*. It is better to remove as much speed as you can from a possible collision. Then steer around the problem, to the left or right depending on the space available.

Downloaded from www.Manualslib.com manuals search engine

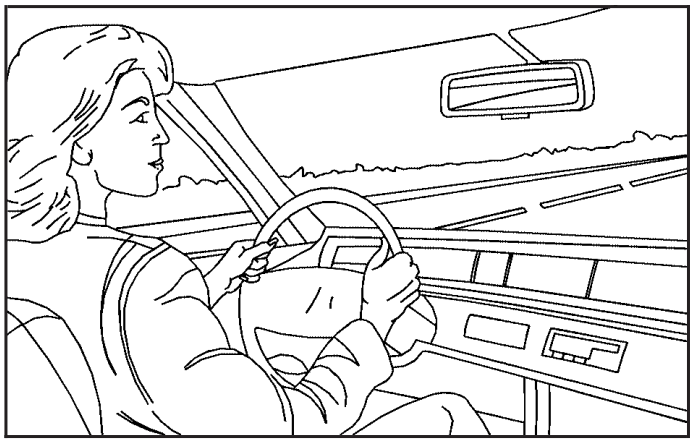

An emergency like this requires close attention and a quick decision. If you are holding the steering wheel at the recommended 9 and 3 o'clock positions, you can turn it a full 180 degrees very quickly without removing either hand. But you have to act fast, steer quickly, and just as quickly straighten the wheel once you have avoided the object.

The fact that such emergency situations are always possible is a good reason to practice defensive driving at all times and wear safety belts properly.

Off-Road Recovery

You may find that your vehicle's right wheels have dropped off the edge of a road onto the shoulder while you are driving.

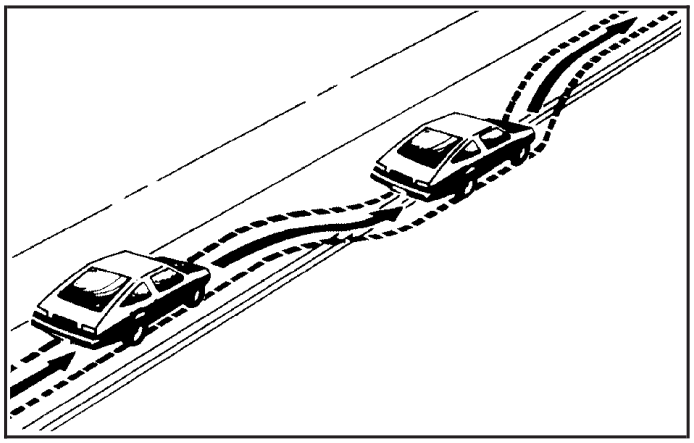

If the level of the shoulder is only slightly below the pavement, recovery should be fairly easy. Ease off the accelerator and then, if there is nothing in the way, steer so that your vehicle straddles the edge of the pavement. You can turn the steering wheel up to one-quarter turn until the right front tire contacts the pavement edge. Then turn your steering wheel to go straight down the roadway.

Downloaded from www.Manualslib.com manuals search engine

Passing

The driver of a vehicle about to pass another on a two-lane highway waits for just the right moment, accelerates, moves around the vehicle ahead, then goes back into the right lane again. A simple maneuver?

Not necessarily! Passing another vehicle on a two-lane highway is a potentially dangerous move, since the passing vehicle occupies the same lane as oncoming traffic for several seconds. A miscalculation, an error in judgment, or a brief surrender to frustration or anger can suddenly put the passing driver face to face with the worst of all traffic accidents — the head-on collision.

So here are some tips for passing:

- Drive ahead. Look down the road, to the sides, and to crossroads for situations that might affect your passing patterns. If you have any doubt whatsoever about making a successful pass, wait for a better time.
- Watch for traffic signs, pavement markings, and lines. If you can see a sign up ahead that might indicate a turn or an intersection, delay your pass. A broken center line usually indicates it is all right to pass, providing the road ahead is clear. Never cross a solid line on your side of the lane or a double solid line, even if the road seems empty of approaching traffic.
- Do not get too close to the vehicle you want to pass while you are awaiting an opportunity. For one thing, following too closely reduces your area of vision, especially if you are following a larger vehicle. Also, you will not have adequate space if the vehicle ahead suddenly slows or stops. Keep back a reasonable distance.

Downloaded from www.Manualslib.com manuals search engine

- When it looks like a chance to pass is coming up, start to accelerate but stay in the right lane and do not get too close. Time your move so you will be increasing speed as the time comes to move into the other lane. If the way is clear to pass, you will have a running start that more than makes up for the distance you would lose by dropping back. And if something happens to cause you to cancel your pass, you need only slow down and drop back again and wait for another opportunity.
- If other vehicles are lined up to pass a slow vehicle, wait your turn. But take care that someone is not trying to pass you as you pull out to pass the slow vehicle. Remember to glance over your shoulder and check the blind spot.
- Check your vehicle's mirrors, glance over your shoulder, and start your left lane change signal before moving out of the right lane to pass. When you are far enough ahead of the passed vehicle to see its front in your vehicle's inside mirror, activate the right lane change signal and move back into the right lane. Remember that your vehicle's passenger side outside mirror is convex. The vehicle you just passed may seem to be farther away from you than it really is.
- Try not to pass more than one vehicle at a time on two-lane roads. Reconsider before passing the next vehicle.
- Do not overtake a slowly moving vehicle too rapidly. Even though the brake lamps are not flashing, it may be slowing down or starting to turn.
- If you are being passed, make it easy for the following driver to get ahead of you. Perhaps you can ease a little to the right.

Downloaded from www.Manualslib.com manuals search engine

Loss of Control

Let us review what driving experts say about what happens when the three control systems — brakes, steering, and acceleration — do not have enough friction where the tires meet the road to do what the driver has asked.

In any emergency, do not give up. Keep trying to steer and constantly seek an escape route or area of less danger.

Skidding

In a skid, a driver can lose control of the vehicle. Defensive drivers avoid most skids by taking reasonable care suited to existing conditions, and by not overdriving those conditions. But skids are always possible.

The three types of skids correspond to your vehicle's three control systems. In the braking skid, your wheels are not rolling. In the steering or cornering skid, too much speed or steering in a curve causes tires to slip and lose cornering force. And in the acceleration skid, too much throttle causes the driving wheels to spin.

A cornering skid and an acceleration skid are best handled by easing your foot off the accelerator pedal.

If your vehicle starts to slide, ease your foot off the accelerator pedal and quickly steer the way you want the vehicle to go. If you start steering quickly enough, your vehicle may straighten out. Always be ready for a second skid if it occurs.

Of course, traction is reduced when water, snow, ice, gravel, or other material is on the road. For safety, you will want to slow down and adjust your driving to these conditions. It is important to slow down on slippery surfaces because stopping distance will be longer and vehicle control more limited.

While driving on a surface with reduced traction, try your best to avoid sudden steering, acceleration, or braking, including reducing vehicle speed by shifting to a lower gear. Any sudden changes could cause the tires to slide. You may not realize the surface is slippery until your vehicle is skidding. Learn to recognize warning clues — such as enough water, ice, or packed snow on the road to make a mirrored surface — and slow down when you have any doubt.

Downloaded from www.Manualslib.com manuals search engine

If you have the Anti-Lock Brake System (ABS), remember: It helps avoid only the braking skid. If you do not have ABS, then in a braking skid, where the wheels are no longer rolling, release enough pressure on the brakes to get the wheels rolling again. This restores steering control. Push the brake pedal down steadily when you have to stop suddenly. As long as the wheels are rolling, you will have steering control.

Driving at Night

Night driving is more dangerous than day driving. One reason is that some drivers are likely to be impaired — by alcohol or drugs, with night vision problems, or by fatigue.

Here are some tips on night driving.

- Drive defensively.
- Do not drink and drive.
- Adjust the inside rearview mirror to reduce the glare from headlamps behind you.
- Since you cannot see as well, you may need to slow down and keep more space between you and other vehicles.
- Slow down, especially on higher speed roads. Your vehicle's headlamps can light up only so much road ahead.
- In remote areas, watch for animals.
- If you are tired, pull off the road in a safe place and rest.

No one can see as well at night as in the daytime. But as we get older these differences increase. A 50-year-old driver may require at least twice as much light to see the same thing at night as a 20-year-old.

What you do in the daytime can also affect your night vision. For example, if you spend the day in bright sunshine you are wise to wear sunglasses. Your eyes will have less trouble adjusting to night. But if you are driving, do not wear sunglasses at night. They may cut down on glare from headlamps, but they also make a lot of things invisible.

Downloaded from www.Manualslib.com manuals search engine

You can be temporarily blinded by approaching headlamps. It can take a second or two, or even several seconds, for your eyes to re-adjust to the dark. When you are faced with severe glare, as from a driver who does not lower the high beams, or a vehicle with misaimed headlamps, slow down a little. Avoid staring directly into the approaching headlamps.

Keep the windshield and all the glass on your vehicle clean — inside and out. Glare at night is made much worse by dirt on the glass. Even the inside of the glass can build up a film caused by dust. Dirty glass makes lights dazzle and flash more than clean glass would, making the pupils of your eyes contract repeatedly.

Remember that the headlamps light up far less of a roadway when you are in a turn or curve. Keep your eyes moving; that way, it is easier to pick out dimly lighted objects. Just as the headlamps should be checked regularly for proper aim, so should your eyes be examined regularly. Some drivers suffer from night blindness — the inability to see in dim light — and are not even aware of it.

Driving in Rain and on Wet Roads

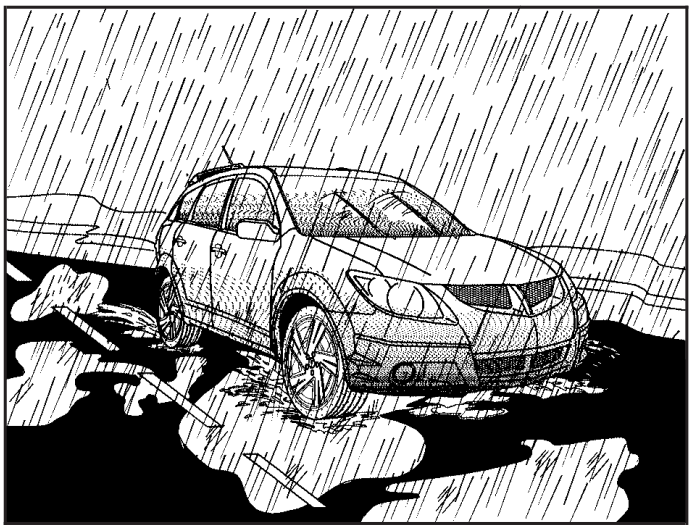

Rain and wet roads can mean driving trouble. On a wet road, you cannot stop, accelerate, or turn as well because your tire-to-road traction is not as good as on dry roads. And, if your tires do not have much tread left, you will get even less traction. It is always wise to go slower and be cautious if rain starts to fall while you are driving. The surface may get wet suddenly when your reflexes are tuned for driving on dry pavement.

Downloaded from www.Manualslib.com manuals search engine

The heavier the rain, the harder it is to see. Even if your windshield wiper blades are in good shape, a heavy rain can make it harder to see road signs and traffic signals, pavement markings, the edge of the road, and even people walking.

It is wise to keep your windshield wiping equipment in good shape and keep your windshield washer fluid reservoir filled with washer fluid. Replace your windshield wiper inserts when they show signs of streaking or missing areas on the windshield, or when strips of rubber start to separate from the inserts.

⚠ CAUTION:

Wet brakes can cause accidents. They may not work as well in a quick stop and may cause pulling to one side. You could lose control of the vehicle.

After driving through a large puddle of water or a car wash, apply the brake pedal lightly until the brakes work normally.

Driving too fast through large water puddles or even going through some car washes can cause problems, too. The water may affect your brakes. Try to avoid puddles. But if you cannot, try to slow down before you hit them.

Hydroplaning

Hydroplaning is dangerous. So much water can build up under your tires that they can actually ride on the water. This can happen if the road is wet enough and you are going fast enough. When your vehicle is hydroplaning, it has little or no contact with the road.

Hydroplaning does not happen often. But it can if your tires do not have much tread or if the pressure in one or more is low. It can happen if a lot of water is standing on the road. If you can see reflections from trees, telephone poles, or other vehicles, and raindrops dimple the water's surface, there could be hydroplaning.

Hydroplaning usually happens at higher speeds. There just is not a hard and fast rule about hydroplaning. The best advice is to slow down when it is raining.

Downloaded from www.Manualslib.com manuals search engine

Driving Through Deep Standing Water

Notice: **If you drive too quickly through deep puddles or standing water, water can come in through the engine's air intake and badly damage the engine. Never drive through water that is slightly lower than the underbody of your vehicle. If you cannot avoid deep puddles or standing water, drive through them very slowly.**

Driving Through Flowing Water

⚠ CAUTION:

Flowing or rushing water creates strong forces. If you try to drive through flowing water, as you might at a low water crossing, your vehicle can be carried away.

CAUTION: (Continued)

CAUTION: (Continued)

As little as six inches of flowing water can carry away a smaller vehicle. If this happens, you and other vehicle occupants could drown. Do not ignore police warning signs, and otherwise be very cautious about trying to drive through flowing water.

Some Other Rainy Weather Tips

- Besides slowing down, allow some extra following distance. And be especially careful when you pass another vehicle. Allow yourself more clear room ahead, and be prepared to have your view restricted by road spray.
- Have good tires with proper tread depth. See *Tires on page 322*.

Downloaded from www.Manualslib.com manuals search engine

City Driving

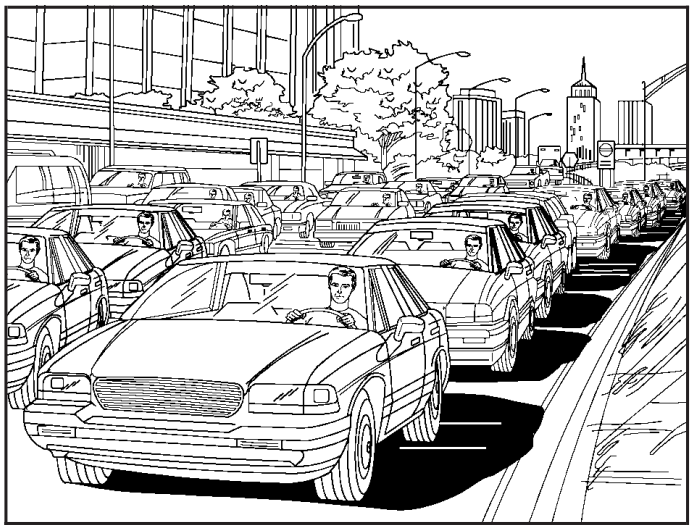

One of the biggest problems with city streets is the amount of traffic on them. You will want to watch out for what the other drivers are doing and pay attention to traffic signals.

Here are ways to increase your safety in city driving:

- Know the best way to get to where you are going. Get a city map and plan your trip into an unknown part of the city just as you would for a cross-country trip.
- Try to use the freeways that rim and crisscross most large cities. You will save time and energy. See *Freeway Driving on page 243*.
- Treat a green light as a warning signal. A traffic light is there because the corner is busy enough to need it. When a light turns green, and just before you start to move, check both ways for vehicles that have not cleared the intersection or may be running the red light.

Downloaded from www.Manualslib.com manuals search engine

Freeway Driving

Mile for mile, freeways — also called thruways, parkways, expressways, turnpikes, or superhighways — are the safest of all roads. But they have their own special rules.

The most important advice on freeway driving is: Keep up with traffic and keep to the right. Drive at the same speed most of the other drivers are driving. Too-fast or too-slow driving breaks a smooth traffic flow. Treat the left lane on a freeway as a passing lane.

At the entrance, there is usually a ramp that leads to the freeway. If you have a clear view of the freeway as you drive along the entrance ramp, you should begin to check traffic. Try to determine where you expect to blend with the flow. Try to merge into the gap at close to the prevailing speed. Switch on your turn signal, check your mirrors, and glance over your shoulder as often as necessary. Try to blend smoothly with the traffic flow.

Once you are on the freeway, adjust your speed to the posted limit or to the prevailing rate if it is slower. Stay in the right lane unless you want to pass.

Before changing lanes, check your mirrors. Then use your turn signal.

Just before you leave the lane, glance quickly over your shoulder to make sure there is not another vehicle in your blind spot.

Once you are moving on the freeway, make certain you allow a reasonable following distance.

Expect to move slightly slower at night.

Downloaded from www.Manualslib.com manuals search engine

When you want to leave the freeway, move to the proper lane well in advance. If you miss your exit, do not, under any circumstances, stop and back up. Drive on to the next exit.

The exit ramp can be curved, sometimes quite sharply. The exit speed is usually posted. Reduce your speed according to your speedometer, not to your sense of motion. After driving for any distance at higher speeds, you may tend to think you are going slower than you actually are.

Before Leaving on a Long Trip

Make sure you are ready. Try to be well rested. If you must start when you are not fresh — such as after a day's work — do not plan to make too many miles that first part of the journey. Wear comfortable clothing and shoes you can easily drive in.

Is your vehicle ready for a long trip? If you keep it serviced and maintained, it is ready to go. If it needs service, have it done before starting out.

Of course, you will find experienced and able service experts in GM dealerships all across North America. They will be ready and willing to help if you need it.

Here are some things you can check before a trip:

- *Windshield Washer Fluid:* Is the reservoir full? Are all windows clean inside and outside?
- *Wiper Blades:* Are they in good shape?
- *Fuel, Engine Oil, Other Fluids:* Have you checked all levels?
- *Lamps:* Are they all working? Are the lenses clean?
- *Tires:* They are vitally important to a safe, trouble-free trip. Is the tread good enough for long-distance driving? Are the tires all inflated to the recommended pressure?
- *Weather Forecasts:* What is the weather outlook along your route? Should you delay your trip a short time to avoid a major storm system?
- *Maps:* Do you have up-to-date maps?

Downloaded from www.Manualslib.com manuals search engine

Highway Hypnosis

Is there actually such a condition as highway hypnosis? Or is it just plain falling asleep at the wheel? Call it highway hypnosis, lack of awareness, or whatever.

There is something about an easy stretch of road with the same scenery, along with the hum of the tires on the road, the drone of the engine, and the rush of the wind against the vehicle that can make you sleepy. Do not let it happen to you! If it does, your vehicle can leave the road in less than a second, and you could crash and be injured.

What can you do about highway hypnosis? First, be aware that it can happen.

Then here are some tips:

- Make sure your vehicle is well ventilated, with a comfortably cool interior.
- Keep your eyes moving. Scan the road ahead and to the sides. Check your rearview mirrors and your instruments frequently.
- If you get sleepy, pull off the road into a rest, service, or parking area and take a nap, get some exercise, or both. For safety, treat drowsiness on the highway as an emergency.

Downloaded from www.Manualslib.com manuals search engine

Hill and Mountain Roads

Driving on steep hills or mountains is different from driving in flat or rolling terrain.

If you drive regularly in steep country, or if you are planning to visit there, here are some tips that can make your trips safer and more enjoyable.

- Keep your vehicle in good shape. Check all fluid levels and also the brakes, tires, cooling system, and transaxle. These parts can work hard on mountain roads.

⚠ CAUTION:

If you do not shift down, the brakes could get so hot that they would not work well. You would then have poor braking or even none going down a hill. You could crash. Shift down to let the engine assist the brakes on a steep downhill slope.

Downloaded from www.Manualslib.com manuals search engine

⚠ CAUTION:

Coasting downhill in NEUTRAL (N) or with the ignition off is dangerous. The brakes will have to do all the work of slowing down. They could get so hot that they would not work well. You would then have poor braking or even none going down a hill. You could crash. Always have the engine running and your vehicle in gear when you go downhill.

- Know how to go down hills. The most important thing to know is this: let your engine do some of the slowing down. Shift to a lower gear when you go down a steep or long hill.
- Know how to go uphill. You may want to shift down to a lower gear. The lower gears help cool your engine and transaxle, and you can climb the hill better.
- Stay in your own lane when driving on two-lane roads in hills or mountains. Do not swing wide or cut across the center of the road. Drive at speeds that let you stay in your own lane.
- As you go over the top of a hill, be alert. There could be something in your lane, like a stalled car or an accident.
- You may see highway signs on mountains that warn of special problems. Examples are long grades, passing or no-passing zones, a falling rocks area, or winding roads. Be alert to these and take appropriate action.

Downloaded from www.Manualslib.com manuals search engine

Winter Driving

Here are some tips for winter driving:

- Have your vehicle in good shape for winter.
- You may want to put winter emergency supplies in your vehicle.

Also see *Tires on page 322*.

Include an ice scraper, a small brush or broom, a supply of windshield washer fluid, a rag, some winter outer clothing, a small shovel, a flashlight, a red cloth, and a couple of reflective warning triangles. And, if you will be driving under severe conditions, include a small bag of sand, a piece of old carpet, or a couple of burlap bags to help provide traction. Be sure you properly secure these items in your vehicle.

Driving on Snow or Ice

Most of the time, those places where the tires meet the road probably have good traction.

However, if there is snow or ice between the tires and the road, you can have a very slippery situation. You will have a lot less traction, or grip, and will need to be very careful.

Downloaded from www.Manualslib.com manuals search engine

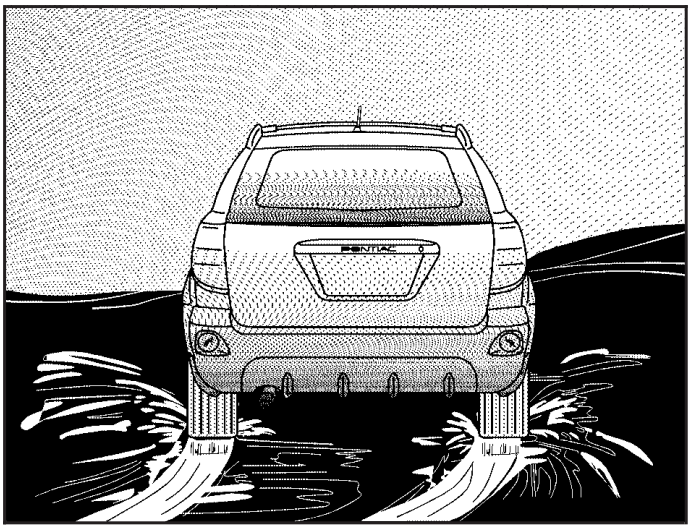

What is the worst time for this? Wet ice. Very cold snow or ice can be slick and hard to drive on. But wet ice can be even more trouble because it may offer the least traction of all. You can get wet ice when it is about freezing, 32°F (0°C), and freezing rain begins to fall. Try to avoid driving on wet ice until salt and sand crews can get there.

Whatever the condition — smooth ice, packed, blowing, or loose snow — drive with caution.

Accelerate gently. Try not to break the fragile traction. If you accelerate too fast, the drive wheels will spin and polish the surface under the tires even more.

Unless you have the Anti-Lock Brake System (ABS), you will want to brake very gently, too. If you do have ABS, see *Anti-Lock Brake System (ABS) on page 227*. This system improves your vehicle's stability when you make a hard stop on a slippery road. Whether you have ABS or not, you will want to begin stopping sooner than you would on dry pavement. Without ABS, if you feel your vehicle begin to slide, let up on the brakes a little. Push the brake pedal down steadily to get the most traction you can.

Downloaded from www.Manualslib.com manuals search engine

Remember, unless you have ABS, if you brake so hard that your wheels stop rolling, you will just slide. Brake so your wheels always keep rolling and you can still steer.

- Whatever your braking system, allow greater distance on any slippery road.
- Watch for slippery spots. The road might be fine until you hit a spot that is covered with ice. On an otherwise clear road, ice patches may appear in shaded areas where the sun cannot reach, such as around clumps of trees, behind buildings, or under bridges. Sometimes the surface of a curve or an overpass may remain icy when the surrounding roads are clear. If you see a patch of ice ahead of you, brake before you are on it. Try not to brake while you are actually on the ice, and avoid sudden steering maneuvers.

If You Are Caught in a Blizzard

If you are stopped by heavy snow, you could be in a serious situation. You should probably stay with your vehicle unless you know for sure that you are near help and you can hike through the snow. Here are some things to do to summon help and keep yourself and your passengers safe:

- Turn on your hazard flashers.
- Tie a red cloth to your vehicle to alert police that you have been stopped by the snow.
- Put on extra clothing or wrap a blanket around you. If you do not have blankets or extra clothing, make body insulators from newspapers, burlap bags, rags, floor mats — anything you can wrap around yourself or tuck under your clothing to keep warm.

Downloaded from www.Manualslib.com manuals search engine

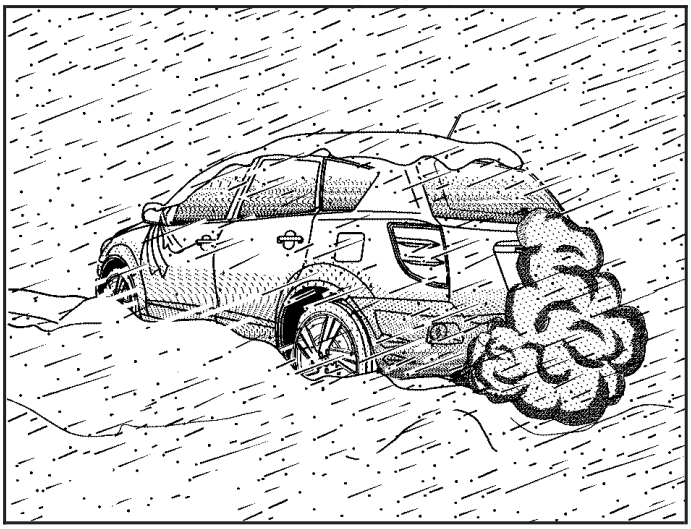

You can run the engine to keep warm, but be careful.

⚠ CAUTION:

Snow can trap exhaust gases under your vehicle. This can cause deadly CO (carbon monoxide) gas to get inside. CO could overcome you and kill you. You cannot see it or smell it, so you might not know it is in your vehicle. Clear away snow from around the base of your vehicle, especially any that is blocking the exhaust pipe. And check around again from time to time to be sure snow does not collect there.

Open a window just a little on the side of the vehicle that is away from the wind. This will help keep CO out.

Run your engine only as long as you must. This saves fuel. When you run the engine, make it go a little faster than just idle. That is, push the accelerator slightly. This uses less fuel for the heat that you get and it keeps the battery charged.

Downloaded from www.Manualslib.com manuals search engine

You will need a well-charged battery to restart the vehicle, and possibly for signaling later on with your headlamps. Let the heater run for a while.

Then, shut the engine off and close the window almost all the way to preserve the heat. Start the engine again and repeat this only when you feel really uncomfortable from the cold. But do it as little as possible. Preserve the fuel as long as you can. To help keep warm, you can get out of the vehicle and do some fairly vigorous exercises every half hour or so until help comes.

If Your Vehicle is Stuck in Sand, Mud, Ice, or Snow

In order to free your vehicle when it is stuck, you will need to spin the wheels, but you do not want to spin your wheels too fast. The method known as rocking can help you get out when you are stuck, but you must use caution.

⚠ CAUTION:

If you let your vehicle's tires spin at high speed, they can explode, and you or others could be injured. And, the transaxle or other parts of the vehicle can overheat. That could cause an engine compartment fire or other damage. When you are stuck, spin the wheels as little as possible. Do not spin the wheels above 35 mph (55 km/h) as shown on the speedometer.

Notice: **Spinning the wheels can destroy parts of your vehicle as well as the tires. If you spin the wheels too fast while shifting the transaxle back and forth, you can destroy the transaxle. See *Rocking Your Vehicle to Get It Out on page 253*.**

For information about using tire chains on your vehicle, see *Tire Chains on page 341*.

Downloaded from www.Manualslib.com manuals search engine

Rocking Your Vehicle to Get It Out

First, turn the steering wheel left and right. That will clear the area around the front wheels. Then shift back and forth between REVERSE (R) and a forward gear, or with a manual transaxle, between FIRST (1) or SECOND (2) and REVERSE (R), spinning the wheels as little as possible. Release the accelerator pedal while you shift, and press lightly on the accelerator pedal when the transaxle is in gear. By slowly spinning the wheels in the forward and reverse directions, you will cause a rocking motion that may free your vehicle. If that does not get your vehicle out after a few tries, it may need to be towed out. Or, you can use the recovery hook. If your vehicle does need to be towed out, see *Towing Your Vehicle on page 259*.

Loading Your Vehicle

It is very important to know how much weight your vehicle can carry. Two labels on your vehicle show how much weight it may properly carry, the Tire and Loading Information label and the Certification label.

⚠ CAUTION:

Do not load your vehicle any heavier than the Gross Vehicle Weight Rating (GVWR), or either the maximum front or rear Gross Axle Weight Rating (GAWR). If you do, parts on your vehicle can break, and it can change the way your vehicle handles. These could cause you to lose control and crash. Also, overloading can shorten the life of your vehicle.

Downloaded from www.Manualslib.com manuals search engine

Tire and Loading Information Label

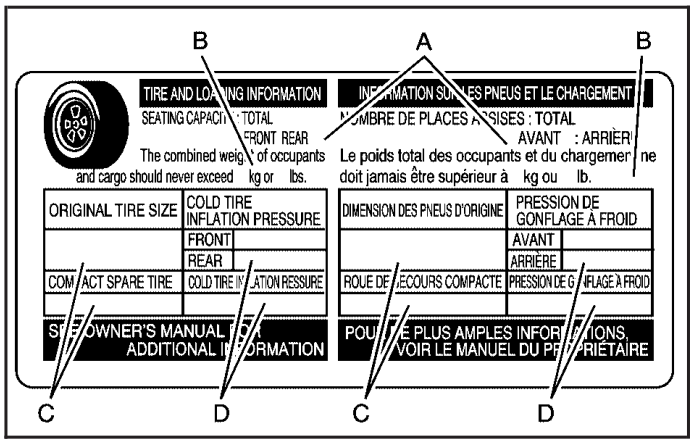

Label Example

A vehicle specific Tire and Loading Information label is attached to the vehicle's center pillar (B-pillar). With the driver's door open you will find the label attached below the door lock post (striker). The Tire and Loading Information label shows the number of occupant seating positions (A), and the maximum vehicle capacity weight (B) in kilograms and pounds.

This weight includes the weight of all occupants, cargo, and all nonfactory-installed options.

The Tire and Loading Information label also shows the tire size of the original equipment tires (C), and the recommended cold tire inflation pressures (D). For more information on tires and inflation see *Tires on page 322* and *Inflation - Tire Pressure on page 329*.

There is also important loading information on the Certification label. It tells you the Gross Vehicle Weight Rating (GVWR) and the Gross Axle Weight Rating (GAWR) for the front and rear axle. See "Certification Label" later in this section.

Steps for Determining Correct Load Limit

1. Locate the statement "The combined weight of occupants and cargo should never exceed XXX kg or XXX lbs" on your vehicle's placard.
2. Determine the combined weight of the driver and passengers that will be riding in your vehicle.
3. Subtract the combined weight of the driver and passengers from XXX kg or XXX lbs.

Downloaded from www.Manualslib.com manuals search engine

4. The resulting figure equals the available amount of cargo and luggage load capacity. For example, if the “XXX” amount equals 1400 lbs and there will be five 150 lb passengers in your vehicle, the amount of available cargo and luggage load capacity is 650 lbs (1400 – 750 (5 x 150) = 650 lbs).
5. Determine the combined weight of luggage and cargo being loaded on the vehicle. That weight may not safely exceed the available cargo and luggage load capacity calculated in Step 4.
6. If your vehicle will be towing a trailer, the load from your trailer will be transferred to your vehicle. Consult this manual to determine how this reduces the available cargo and luggage load capacity of your vehicle.

If your vehicle can tow a trailer, see *Towing a Trailer on page 261* for important information on towing a trailer, towing safety rules and trailering tips.

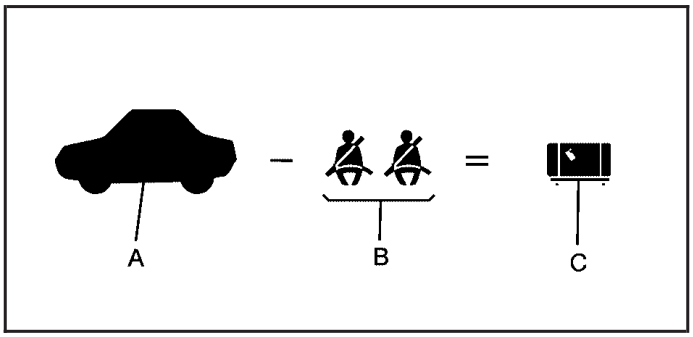

Example 1

Item	Description	Total
A	Vehicle Capacity Weight for Example 1 =	1,000 lbs (453 kg)
B	Subtract Occupant Weight 150 lbs (68 kg) x 2 =	300 lbs (136 kg)
C	Available Occupant and Cargo Weight =	700 lbs (317 kg)

Downloaded from www.Manualslib.com manuals search engine

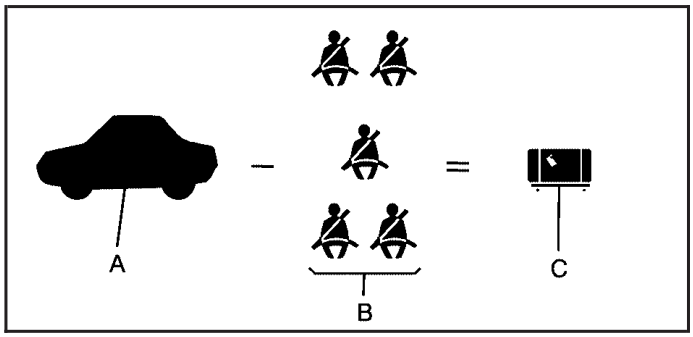

Example 2

Item	Description	Total
A	Vehicle Capacity Weight for Example 2 =	1,000 lbs (453 kg)
B	Subtract Occupant Weight 150 lbs (68 kg) x 5 =	750 lbs (340 kg)
C	Available Cargo Weight =	250 lbs (113 kg)

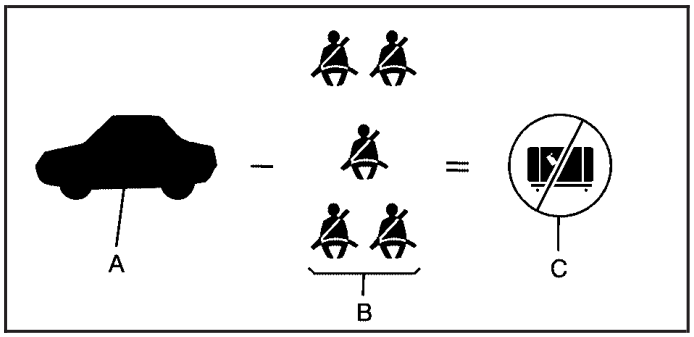

Example 3

Item	Description	Total
A	Vehicle Capacity Weight for Example 3 =	1,000 lbs (453 kg)
B	Subtract Occupant Weight 200 lbs (91 kg) x 5 =	1,000 lbs (453 kg)
C	Available Cargo Weight =	0 lbs (0 kg)

Downloaded from www.Manualslib.com manuals search engine

Refer to your vehicle's Tire and Loading Information label for specific information about your vehicle's capacity weight and seating positions. The combined weight of the driver, passengers, and cargo should never exceed your vehicle's maximum vehicle capacity weight.

Certification Label

Label Example

A vehicle specific Certification label is attached to the center pillar, near the driver's door latch. It tells you the gross weight capacity of your vehicle, called the Gross Vehicle Weight Rating (GVWR).

The GVWR includes the weight of the vehicle, all occupants, fuel, and cargo. Never exceed the GVWR for your vehicle, or the Gross Axle Weight Rating (GAWR) for either the front or rear axle.

And, if you do have a heavy load, you should spread it out. See "Steps for Determining Correct Load Limit" earlier in this section.

⚠ CAUTION:

Do not load your vehicle any heavier than the Gross Vehicle Weight Rating (GVWR), or either the maximum front or rear Gross Axle Weight Rating (GAWR). If you do, parts on your vehicle can break, and it can change the way your vehicle handles. These could cause you to lose control and crash. Also, overloading can shorten the life of your vehicle.

Notice: **Overloading your vehicle may cause damage. Repairs would not be covered by your warranty. Do not overload your vehicle.**

Downloaded from www.Manualslib.com manuals search engine

If you put things inside your vehicle — like suitcases, tools, packages, or anything else — they will go as fast as the vehicle goes. If you have to stop or turn quickly, or if there is a crash, they will keep going.

⚠ CAUTION:

Things you put inside your vehicle can strike and injure people in a sudden stop or turn, or in a crash.

- **Put things in the rear area of your vehicle. Try to spread the weight evenly. If you have fold-down rear seats, you will find four anchors on the back wall of your trunk. You can use these anchors to tie down lighter loads. They are not strong enough for heavy things, however, so put them as far forward as you can in the trunk or rear area.**

CAUTION: (Continued)

CAUTION: (Continued)

- **Never stack heavier things, like suitcases, inside the vehicle so that some of them are above the tops of the seats.**
- **Do not leave an unsecured child restraint in your vehicle.**
- **When you carry something inside the vehicle, secure it whenever you can.**
- **Do not leave a seat folded down unless you need to.**

Downloaded from www.Manualslib.com manuals search engine

Towing

Towing Your Vehicle

Consult your dealer or a professional towing service if you need to have your disabled vehicle towed. See *Roadside Assistance Program on page 406*.

If you want to tow your vehicle behind another vehicle for recreational purposes (such as behind a motorhome), see “Recreational Vehicle Towing” following.

Recreational Vehicle Towing

Recreational vehicle towing means towing your vehicle behind another vehicle – such as behind a motorhome. The two most common types of recreational vehicle towing are known as “dinghy towing” (towing your vehicle with all four wheels on the ground) and “dolly towing” (towing your vehicle with two wheels on the ground and two wheels up on a device known as a “dolly”).

With the proper preparation and equipment, many vehicles can be towed in these ways. See “Dinghy Towing” and “Dolly Towing,” following.

Here are some important things to consider before you do recreational vehicle towing:

- What’s the towing capacity of the towing vehicle? Be sure you read the tow vehicle manufacturer’s recommendations.
- How far will you tow? Some vehicles have restrictions on how far and how long they can tow.
- Do you have the proper towing equipment? See your dealer or trailering professional for additional advice and equipment recommendations.
- Is your vehicle ready to be towed? Just as you would prepare your vehicle for a long trip, you’ll want to make sure your vehicle is prepared to be towed. See *Before Leaving on a Long Trip on page 244*.

Downloaded from www.Manualslib.com manuals search engine

Dinghy Towing

If your vehicle has an automatic transaxle, it cannot be dinghy towed. See “Dolly Towing” for more information regarding towing your vehicle.

If your vehicle has a manual transaxle, it can be dinghy towed.

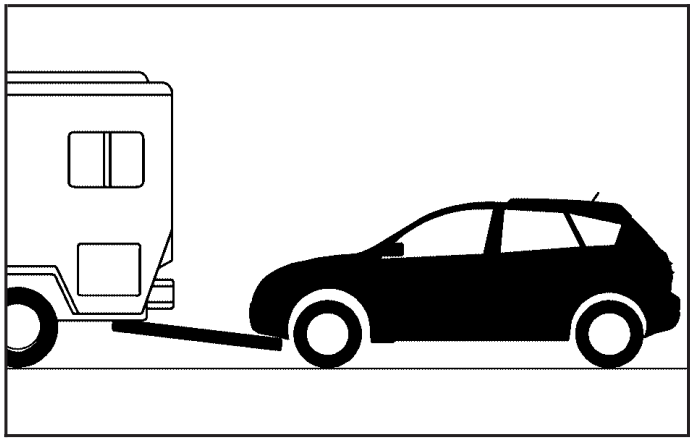

When dinghy towing, be sure to follow the posted legal speed limit.

1. Put the shift lever in NEUTRAL.
2. Turn the ignition to ACC to avoid locking the steering wheel. Make sure the audio system is turned off and that nothing is plugged into the power outlets.
3. Release the parking brake.

After dinghy towing, let the engine idle for more than three minutes before driving the vehicle.

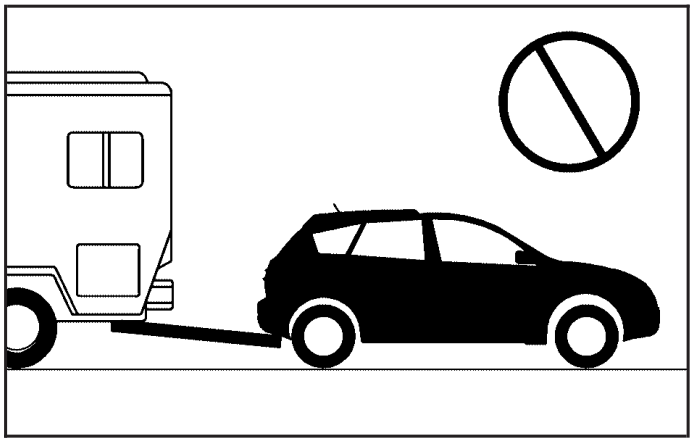

Do not tow your vehicle from the rear. Your vehicle could be badly damaged and the repairs would not be covered by your warranty.

Downloaded from www.Manualslib.com manuals search engine

Dolly Towing

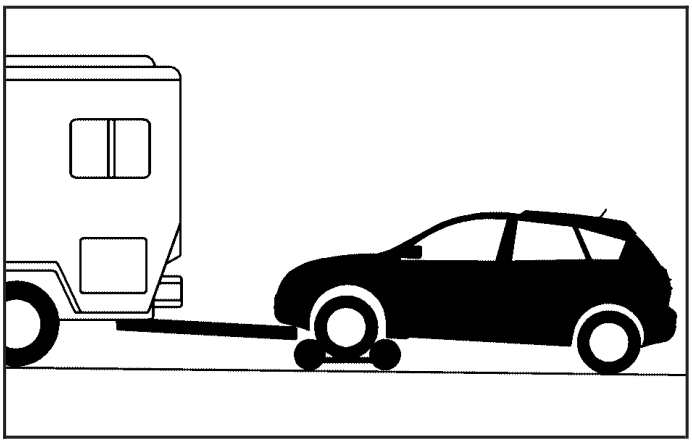

To tow your vehicle using a dolly, follow these steps:

1. Put the front wheels on a dolly.
2. Put the vehicle in PARK (P) for an automatic transaxle and in NEUTRAL for a manual transaxle.
3. Clamp the steering wheel in a straight-ahead position with a clamping device designed for towing.
4. Release the parking brake.

Towing a Trailer

⚠ CAUTION:

If you do not use the correct equipment and drive properly, you can lose control when you pull a trailer. For example, if the trailer is too heavy, the brakes may not work well — or even at all. You and your passengers could be seriously injured. You may also damage your vehicle; the resulting repairs would not be covered by your warranty. Pull a trailer only if you have followed all the steps in this section. Ask your dealer for advice and information about towing a trailer with your vehicle.

Your vehicle can tow a trailer if it is equipped with the proper trailer towing equipment. To identify the vehicle trailering capacity of your vehicle, you should read the information in “Weight of the Trailer” that appears later in this section.

Downloaded from www.Manualslib.com manuals search engine

Trailering is different than just driving your vehicle by itself. Trailering means changes in handling, acceleration, braking, durability and fuel economy. Successful, safe trailering takes correct equipment, and it has to be used properly.

That's the reason for this part. In it are many time-tested, important trailering tips and safety rules. Many of these are important for your safety and that of your passengers. So please read this section carefully before you pull a trailer.

Load-pulling components such as the engine, transaxle, wheel assemblies and tires are forced to work harder against the drag of the added weight. The engine is required to operate at relatively higher speeds and under greater loads, generating extra heat. What's more, the trailer adds considerably to wind resistance, increasing the pulling requirements.

If You Do Decide To Pull A Trailer

If you do, here are some important points:

- There are many different laws, including speed limit restrictions, having to do with trailering. Make sure your rig will be legal, not only where you live but also where you'll be driving. A good source for this information can be state or provincial police.
- Consider using a sway control. You can ask a hitch dealer about sway controls.
- Don't tow a trailer at all during the first 1,000 miles (1 600 km) your new vehicle is driven. Your engine, axle or other parts could be damaged.
- Then, during the first 500 miles (800 km) that you tow a trailer, don't drive over 50 mph (80 km/h) and don't make starts at full throttle. This helps your engine and other parts of your vehicle wear in at the heavier loads.
- Obey speed limit restrictions when towing a trailer. Don't drive faster than the maximum posted speed for trailers, or no more than 55 mph (90 km/h), to save wear on your vehicle's parts.

Downloaded from www.Manualslib.com manuals search engine

Three important considerations have to do with weight:

- the weight of the trailer
- the weight of the trailer tongue
- and the total weight on your vehicle's tires

Weight of the Trailer

How heavy can a trailer safely be?

It should never weigh more than 1,500 lbs (680 kg). But even that can be too heavy.

It depends on how you plan to use your rig. For example, speed, altitude, road grades, outside temperature and how much your vehicle is used to pull a trailer are all important. It can also depend on any special equipment that you have on your vehicle, and the amount of tongue weight the vehicle can carry. See "Weight of the Trailer Tongue" later in this section for more information.

Maximum trailer weight is calculated assuming only the driver is in the tow vehicle and it has all the required trailering equipment. The weight of additional optional equipment, passengers and cargo in the tow vehicle must be subtracted from the maximum trailer weight.

You can ask your dealer for our trailering information or advice, or you can write us at our Customer Assistance Offices. See *Customer Assistance Offices on page 404* for more information.

Weight of the Trailer Tongue

The tongue load (A) of any trailer is an important weight to measure because it affects the total or gross weight of your vehicle. The Gross Vehicle Weight (GVW) includes the curb weight of the vehicle, any cargo you may carry in it, and the people who will be riding in the vehicle. And if you tow a trailer, you must add the tongue load to the GVW because your vehicle will be carrying that weight, too. See *Loading Your Vehicle on page 253* for more information about your vehicle's maximum load capacity.

Downloaded from www.Manualslib.com manuals search engine

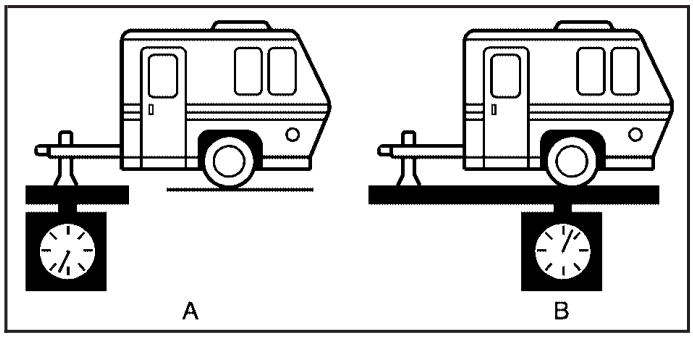

If you're using a weight-carrying hitch or a weight-distributing hitch, the trailer tongue (A) should weigh 10 to 15 percent of the total loaded trailer weight (B).

After you have loaded your trailer, weigh the trailer and then the tongue, separately, to see if the weights are proper. If they are not, you may be able to get them right simply by moving some items around in the trailer.

Total Weight on Your Vehicle's Tires

Be sure your vehicle's tires are inflated to the upper limit for cold tires. You'll find these numbers on the Tire and Loading Information label located on the vehicle's center pillar (B-pillar).

See *Loading Your Vehicle on page 253*. Then be sure you do not go over the GVW limit for your vehicle, including the weight of the trailer tongue.

Hitches

It's important to have the correct hitch equipment. Crosswinds, large trucks going by and rough roads are a few reasons why you'll need the right hitch. Here are some rules to follow:

- Don't let the steel in a hitch contact the aluminum on your bumper. If you do, the two will corrode. You can use something like paint or plastic tape to separate the steel and aluminum. The same steel to aluminum problem can happen with fasteners too.
- Will you have to make any holes in the body of your vehicle when you install a trailer hitch? If you do, then be sure to seal the holes later when you remove the hitch. If you don't seal them, deadly carbon monoxide (CO) from your exhaust can get into your vehicle. See *Engine Exhaust on page 119*. Dirt and water can too.

Downloaded from www.Manualslib.com manuals search engine

Safety Chains

You should always attach chains between your vehicle and your trailer. Cross the safety chains under the tongue of the trailer so that the tongue will not drop to the road if it becomes separated from the hitch. Instructions about safety chains may be provided by the hitch manufacturer or by the trailer manufacturer. Follow the manufacturer's recommendation for attaching safety chains and do not attach them to the bumper. Always leave just enough slack so you can turn with your rig. And, never allow safety chains to drag on the ground.

Trailer Brakes

Does your trailer have its own brakes?

Be sure to read and follow the instructions for the trailer brakes so you'll be able to install, adjust and maintain them properly. And, if you have anti-lock brakes, do not try to tap into your vehicle's brake system. If you do, both systems won't work well, or at all.

Driving with a Trailer

Towing a trailer requires a certain amount of experience. Before setting out for the open road, you'll want to get to know your rig. Acquaint yourself with the feel of handling and braking with the added weight of the trailer. And always keep in mind that the vehicle you are driving is now a good deal longer and not nearly as responsive as your vehicle is by itself.

Before you start, check the trailer hitch, platform and attachments, safety chains, electrical connector, lamps, tires and mirror adjustment. If the trailer has electric brakes, start your vehicle and trailer moving and then apply the trailer brake controller by hand to be sure the brakes are working. This lets you check your electrical connection at the same time.

During your trip, check occasionally to be sure that the load is secure, and that the lamps and any trailer brakes are still working.

Downloaded from www.Manualslib.com manuals search engine

Following Distance

Stay at least twice as far behind the vehicle ahead as you would when driving your vehicle without a trailer. This can help you avoid situations that require heavy braking and sudden turns.

Passing

You'll need more passing distance up ahead when you're towing a trailer. And, because you're a good deal longer, you'll need to go much farther beyond the passed vehicle before you can return to your lane.

Backing Up

Hold the bottom of the steering wheel with one hand. Then, to move the trailer to the left, just move that hand to the left. To move the trailer to the right, move your hand to the right. Always back up slowly and, if possible, have someone guide you.

Making Turns

Notice: **Making very sharp turns while trailering could cause the trailer to come in contact with the vehicle. Your vehicle could be damaged. Avoid making very sharp turns while trailering.**

When you're turning with a trailer, make wider turns than normal. Do this so your trailer won't strike soft shoulders, curbs, road signs, trees or other objects. Avoid jerky or sudden maneuvers. Signal well in advance.

Turn Signals When Towing a Trailer

When you tow a trailer, your vehicle may need a different turn signal flasher and/or extra wiring. Check with your dealer. The arrows on your instrument panel will flash whenever you signal a turn or lane change. Properly hooked up, the trailer lamps will also flash, telling other drivers you're about to turn, change lanes or stop.

When towing a trailer, the arrows on your instrument panel will flash for turns even if the bulbs on the trailer are burned out. Thus, you may think drivers behind you are seeing your signal when they are not. It's important to check occasionally to be sure the trailer bulbs are still working.

Downloaded from www.Manualslib.com manuals search engine

Driving On Grades

Reduce speed and shift to a lower gear *before* you start down a long or steep downgrade. If you don't shift down, you might have to use your brakes so much that they would get hot and no longer work well.

On a long uphill grade, shift down and reduce your speed to around 45 mph (70 km/h) to reduce the possibility of the engine and the transaxle overheating.

Parking on Hills

⚠ CAUTION:

You really should not park your vehicle, with a trailer attached, on a hill. If something goes wrong, your rig could start to move. People can be injured, and both your vehicle and the trailer can be damaged.

But if you ever have to park your rig on a hill, here's how to do it:

1. Apply your regular brakes, but don't shift into PARK (P) for an automatic transaxle or into gear for a manual transaxle, yet. When parking uphill, turn your wheels away from the curb. When parking downhill, turn your wheels into the curb.
2. Have someone place chocks under the trailer wheels.
3. When the chocks are in place, release the regular brakes until the chocks absorb the load.
4. Reapply the regular brakes. Then apply your parking brake and shift into PARK (P) for an automatic transaxle or REVERSE (R) for a manual transaxle.
5. Release the regular brakes.

Downloaded from www.Manualslib.com manuals search engine

When You Are Ready to Leave After Parking on a Hill

1. Apply your regular brakes and hold the pedal down while you:
   - start your engine
   - shift into a gear, and
   - release the parking brake
2. Let up on the brake pedal.
3. Drive slowly until the trailer is clear of the chocks.
4. Stop and have someone pick up and store the chocks.

Maintenance When Trailer Towing

Your vehicle will need service more often when you're pulling a trailer. See the Maintenance Schedule for more on this. Things that are especially important in trailer operation are automatic transaxle fluid (don't overfill), engine oil, drive belt, cooling system and brake system. Each of these is covered in this manual, and the Index will help you find them quickly. If you're trailering, it's a good idea to review this information before you start your trip.

Check periodically to see that all hitch nuts and bolts are tight.

Engine Cooling When Trailer Towing

Your cooling system may temporarily overheat during severe operating conditions. See *Engine Overheating on page 297*.

Downloaded from www.Manualslib.com manuals search engine

Section 5 Service and Appearance Care

Service 272
Accessories and Modifications 272
California Proposition 65 Warning 273
Doing Your Own Service Work 273
Adding Equipment to the Outside of Your Vehicle 274
Fuel 274
Gasoline Octane 274
Gasoline Specifications 274
California Fuel 275
Additives 275
Fuels in Foreign Countries 276
Filling the Tank 277
Filling a Portable Fuel Container 279
Checking Things Under the Hood 280
Hood Release 280
Engine Compartment Overview 282
Engine Oil 284
Engine Air Cleaner/Filter 288
Automatic Transaxle Fluid 290
Manual Transaxle Fluid 292
Hydraulic Clutch 293
Engine Coolant 294
Radiator Pressure Cap 297
Engine Overheating 297
Cooling System 299
Power Steering Fluid 304
Windshield Washer Fluid 305
Brakes 306
Battery 309
Jump Starting 310
Bulb Replacement 315
Halogen Bulbs 315
Headlamps, Front Turn Signal, and Parking Lamps 316
Center High-Mounted Stoplamp (CHMSL) 317
Taillamps, Turn Signal, and Stoplamps 318
Back-Up Lamps 320
Replacement Bulbs 320

Downloaded from www.Manualslib.com manuals search engine

Section 5 Service and Appearance Care

Windshield Wiper Blade Replacement 321
Tires 322
Tire Sidewall Labeling 323
Tire Terminology and Definitions 326
Inflation - Tire Pressure 329
Tire Pressure Monitor System 330
Tire Inspection and Rotation 333
When It Is Time for New Tires 335
Buying New Tires 336
Different Size Tires and Wheels 337
Uniform Tire Quality Grading 338
Wheel Alignment and Tire Balance 339
Wheel Replacement 340
Tire Chains 341
If a Tire Goes Flat 342
Changing a Flat Tire 343
Removing the Spare Tire and Tools 344
Removing the Flat Tire and Installing the Spare Tire 346
Storing a Flat or Spare Tire and Tools 351
Compact Spare Tire 354
Appearance Care 354
Cleaning the Inside of Your Vehicle 354
Fabric/Carpet 356
Leather 356
Instrument Panel, Vinyl, and Other Plastic Surfaces 357
Care of Safety Belts 357
Weatherstrips 358
Washing Your Vehicle 358
Cleaning Exterior Lamps/Lenses 358
Finish Care 358
Windshield, Backglass, and Wiper Blades 359
Aluminum Wheels 359
Tires 360
Sheet Metal Damage 360
Finish Damage 361
Underbody Maintenance 361
Chemical Paint Spotting 361
Vehicle Care/Appearance Materials 362

Downloaded from www.Manualslib.com manuals search engine

Section 5 Service and Appearance Care

Vehicle Identification 363
Vehicle Identification Number (VIN) 363
Service Parts Identification Label 363
Electrical System 364
Add-On Electrical Equipment 364
Headlamp Wiring 364
Windshield Wiper Fuses 364
Power Windows and Other Power Options 364
Fuses and Circuit Breakers 365
Instrument Panel Fuse Block 365
Engine Compartment Fuse Block 367
Capacities and Specifications 369
Normal Maintenance Replacement Parts ... 370
Engine Drive Belt Routing 371

Downloaded from www.Manualslib.com manuals search engine

Service

Your dealer knows your vehicle best and wants you to be happy with it. We hope you will go to your dealer for all your service needs. You will get genuine GM parts and GM-trained and supported service people.

We hope you will want to keep your GM vehicle all GM. Genuine GM parts have one of these marks:

ACDelco®

GM Parts®

GM® Goodwrench

GM® Accessories

Accessories and Modifications

When you add non-GM accessories to your vehicle they can affect your vehicle's performance and safety, including such things as, airbags, braking, stability, ride and handling, emissions systems, aerodynamics, durability, and electronic systems like anti-lock brakes, traction control and stability control. Some of these accessories may even cause malfunction or damage not covered by warranty.

GM Accessories are designed to complement and function with other systems on your vehicle. Your GM dealer can accessorize your vehicle using genuine GM Accessories. When you go to your GM dealer and ask for GM Accessories, you will know that GM-trained and supported service technicians will perform the work using genuine GM Accessories.

Downloaded from www.Manualslib.com manuals search engine

California Proposition 65 Warning

Most motor vehicles, including this one, contain and/or emit chemicals known to the State of California to cause cancer and birth defects or other reproductive harm. Engine exhaust, many parts and systems (including some inside the vehicle), many fluids, and some component wear by-products contain and/or emit these chemicals.

Doing Your Own Service Work

⚠ CAUTION:

You can be injured and your vehicle could be damaged if you try to do service work on a vehicle without knowing enough about it.

- **Be sure you have sufficient knowledge, experience, the proper replacement parts, and tools before you attempt any vehicle maintenance task.**

CAUTION: (Continued)

CAUTION: (Continued)

- **Be sure to use the proper nuts, bolts, and other fasteners. English and metric fasteners can be easily confused. If you use the wrong fasteners, parts can later break or fall off. You could be hurt.**

If you want to do some of your own service work, you will want to use the proper service manual. It tells you much more about how to service your vehicle than this manual can. To order the proper service manual, see *Service Publications Ordering Information on page 417*.

Your vehicle has an airbag system. Before attempting to do your own service work, see *Servicing Your Airbag-Equipped Vehicle on page 80*.

You should keep a record with all parts receipts and list the mileage and the date of any service work you perform. See *Part E: Maintenance Record on page 396*.

Downloaded from www.Manualslib.com manuals search engine

Adding Equipment to the Outside of Your Vehicle

Things you might add to the outside of your vehicle can affect the airflow around it. This may cause wind noise and affect windshield washer performance. Check with your dealer before adding equipment to the outside of your vehicle.

Fuel

Use of the recommended fuel is an important part of the proper maintenance of your vehicle. To help keep the engine clean and maintain optimum vehicle performance, GM recommends the use of gasoline advertised as TOP TIER Detergent Gasoline.

Gasoline Octane

Use regular unleaded gasoline with a posted octane rating of 87 or higher. If the octane rating is less than 87, you may notice an audible knocking noise when you drive, commonly referred to as spark knock. If this occurs, use a gasoline rated at 87 octane or higher as soon as possible. If you are using gasoline rated at 87 octane or higher and you hear heavy knocking, your engine needs service.

Gasoline Specifications

At a minimum, gasoline should meet ASTM specification D 4814 in the United States or CAN/CGSB-3.5 in Canada. Some gasolines may contain an octane-enhancing additive called methylcyclopentadienyl manganese tricarbonyl (MMT). General Motors recommends against the use of gasolines containing MMT. See *Additives on page 275* for additional information.

Downloaded from www.Manualslib.com manuals search engine

California Fuel

If your vehicle is certified to meet California Emissions Standards, it is designed to operate on fuels that meet California specifications. See the underhood emission control label. If this fuel is not available in states adopting California emissions standards, your vehicle will operate satisfactorily on fuels meeting federal specifications, but emission control system performance may be affected. The malfunction indicator lamp may turn on and your vehicle may fail a smog-check test. See *Malfunction Indicator Lamp on page 170*. If this occurs, return to your authorized GM dealer for diagnosis. If it is determined that the condition is caused by the type of fuel used, repairs may not be covered by your warranty.

Additives

To provide cleaner air, all gasolines in the United States are now required to contain additives that will help prevent engine and fuel system deposits from forming, allowing your emission control system to work properly. In most cases, you should not have to add anything to your fuel. However, some gasolines contain only the minimum amount of additive required to meet U.S. Environmental Protection Agency regulations. To help keep fuel injectors and intake valves clean, or if your vehicle experiences problems due to dirty injectors or valves, look for gasoline that is advertised as TOP TIER Detergent Gasoline. Also, your dealer has additives that will help correct and prevent most deposit-related problems.

Gasolines containing oxygenates, such as ethers and ethanol, and reformulated gasolines may be available in your area. General Motors recommends that you use these gasolines if they comply with the specifications described earlier.

Downloaded from www.Manualslib.com manuals search engine

However, E85 (85% ethanol) and other fuels containing more than 10% ethanol must not be used in vehicles that were not designed for those fuels.

Notice: **Your vehicle was not designed for fuel that contains methanol. Do not use fuel containing methanol. It can corrode metal parts in the fuel system and also damage plastic and rubber parts. That damage would not be covered under your warranty.**

Some gasolines that are not reformulated for low emissions may contain an octane-enhancing additive called methylcyclopentadienyl manganese tricarbonyl (MMT); ask the attendant where you buy gasoline whether the fuel contains MMT. General Motors recommends against the use of such gasolines. Fuels containing MMT can reduce the life of spark plugs and the performance of the emission control system may be affected. The malfunction indicator lamp may turn on. If this occurs, return to your dealer for service.

Fuels in Foreign Countries

If you plan on driving in another country outside the United States or Canada, the proper fuel might be hard to find. Never use leaded gasoline or any other fuel not recommended in the previous text on fuel. Costly repairs caused by use of improper fuel would not be covered by your warranty.

To check the fuel availability, ask an auto club, or contact a major oil company that does business in the country where you will be driving.

Downloaded from www.Manualslib.com manuals search engine

Filling the Tank

⚠ CAUTION:

Fuel vapor burns violently and a fuel fire can cause bad injuries. To help avoid injuries to you and others, read and follow all the instructions on the pump island. Turn off your engine when you are refueling. Do not smoke if you are near fuel or refueling your vehicle. Do not use cellular phones. Keep sparks, flames, and smoking materials away from fuel. Do not leave the fuel pump unattended when refueling your vehicle. This is against the law in some places. Do not re-enter vehicle while pumping fuel. Keep children away from the fuel pump; never let children pump fuel.

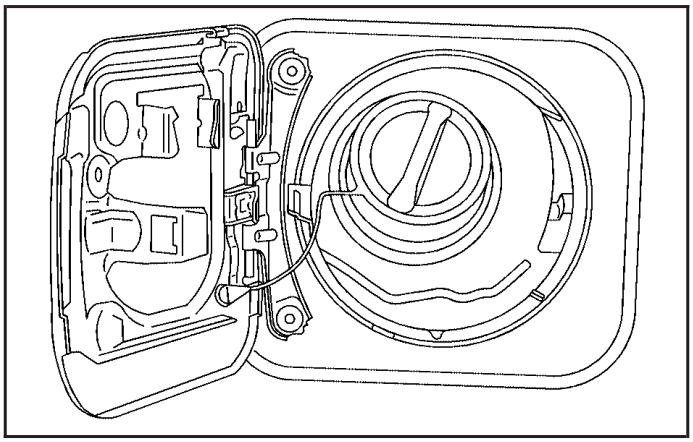

The tethered fuel cap is located behind a hinged fuel door on the driver's side of the vehicle.

Downloaded from www.Manualslib.com manuals search engine

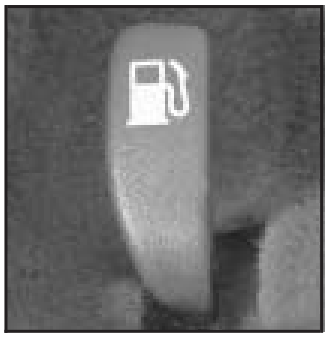

The fuel door release lever is located near the floor under the driver's seat on the outboard side.

To remove the fuel cap, turn it slowly counterclockwise. On some vehicles you may have to push in while turning the cap.

While refueling, hang the fuel cap inside of the fuel door.

⚠ CAUTION:

If you spill fuel and then something ignites it, you could be badly burned. Fuel can spray out on you if you open the fuel cap too quickly. This spray can happen if your tank is nearly full, and is more likely in hot weather. Open the fuel cap slowly and wait for any hiss noise to stop. Then unscrew the cap all the way.

Be careful not to spill fuel. Do not top off or overfill the tank, and wait a few seconds after you have finished pumping before removing the nozzle. Clean fuel from painted surfaces as soon as possible. See *Washing Your Vehicle on page 358*.

When replacing the fuel cap, turn it clockwise until it clicks. Make sure the cap is fully installed. The diagnostic system can determine if the fuel cap has been left off or improperly installed.

Downloaded from www.Manualslib.com manuals search engine

This would allow fuel to evaporate into the atmosphere. See *Malfunction Indicator Lamp on page 170*.

⚠ CAUTION:

If a fire starts while you are refueling, do not remove the nozzle. Shut off the flow of fuel by shutting off the pump or by notifying the station attendant. Leave the area immediately.

Notice: **If you need a new fuel cap, be sure to get the right type. Your dealer can get one for you. If you get the wrong type, it may not fit properly. This may cause your malfunction indicator lamp to light and may damage your fuel tank and emissions system. See *Malfunction Indicator Lamp on page 170*.**

Filling a Portable Fuel Container

⚠ CAUTION:

Never fill a portable fuel container while it is in your vehicle. Static electricity discharge from the container can ignite the gasoline vapor. You can be badly burned and your vehicle damaged if this occurs. To help avoid injury to you and others:

- **Dispense gasoline only into approved containers.**
- **Do not fill a container while it is inside a vehicle, in a vehicle's trunk, pickup bed, or on any surface other than the ground.**
- **Bring the fill nozzle in contact with the inside of the fill opening before operating the nozzle. Contact should be maintained until the filling is complete.**
- **Do not smoke while pumping gasoline.**
- **Do not use a cellular phone while pumping gasoline.**

Downloaded from www.Manualslib.com manuals search engine

Checking Things Under the Hood

⚠ CAUTION:

An electric fan under the hood can start up and injure you even when the engine is not running. Keep hands, clothing, and tools away from any underhood electric fan.

⚠ CAUTION:

Things that burn can get on hot engine parts and start a fire. These include liquids like fuel, oil, coolant, brake fluid, windshield washer and other fluids, and plastic or rubber. You or others could be burned. Be careful not to drop or spill things that will burn onto a hot engine.

Hood Release

To open the hood, do the following:

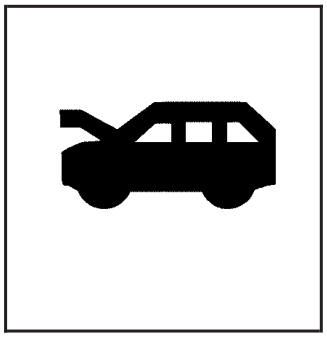

1. Pull the release handle with this symbol on it. It is located below the instrument panel to the left of the steering wheel.

Downloaded from www.Manualslib.com manuals search engine

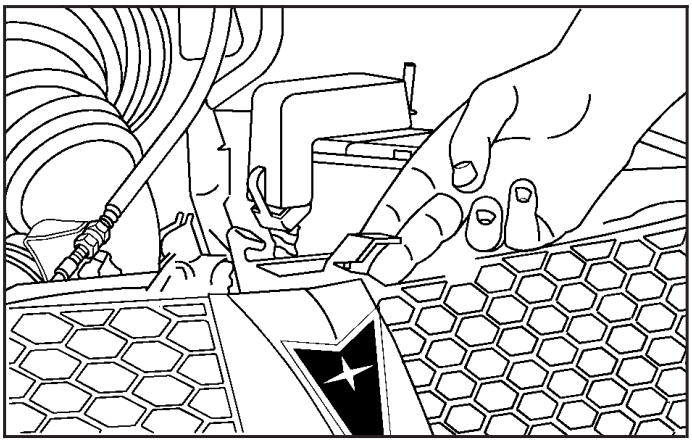

2. Then go to the front of the vehicle and pull up on the secondary hood release. The lever is located near the middle of the hood.
3. Lift the hood.
4. Release the hood prop rod from its retainer and put it into the slot in the hood. To insert the hood prop rod into the slot, move it straight up. If it is moved to the side or toward the inside of the vehicle, it may become detached.

Before closing the hood, be sure all the filler caps are on properly. Make sure to return the hood prop rod carefully back to its retainer to avoid damaging the vehicle.

Downloaded from www.Manualslib.com manuals search engine

Engine Compartment Overview

When you open the hood, here is what you will see:

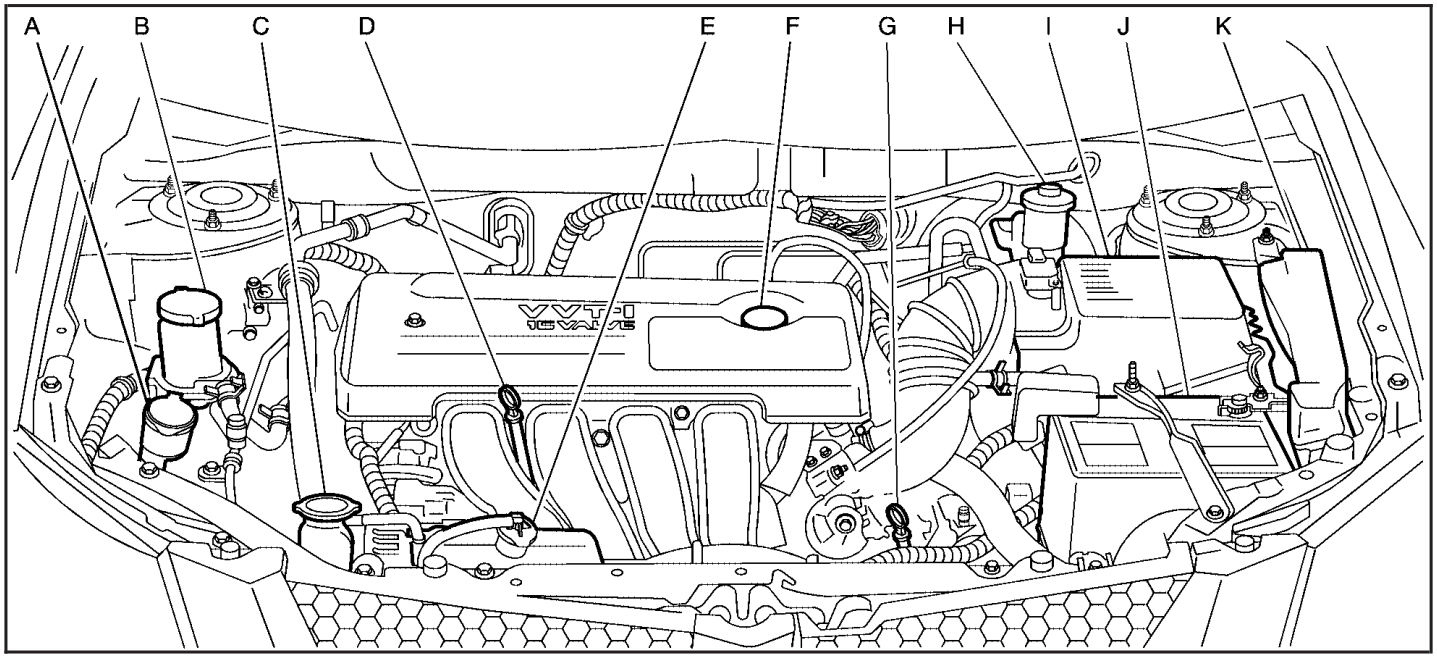

Downloaded from www.Manualslib.com manuals search engine

A. Windshield Washer Fluid Reservoir. See “Adding Washer Fluid” under *Windshield Washer Fluid on page 305*.

B. Power Steering Fluid Reservoir. See *Power Steering Fluid on page 304*.

C. Radiator Pressure Cap. See *Radiator Pressure Cap on page 297*.

D. Engine Oil Dipstick. See “Checking Engine Oil” under *Engine Oil on page 284*.

E. Coolant Recovery Tank. See *Cooling System on page 299*.

F. Engine Oil Fill Cap. See “When to Add Engine Oil” under *Engine Oil on page 284*.

G. Automatic Transaxle Fluid Dipstick (If Equipped). See “Checking the Fluid Level” under *Automatic Transaxle Fluid on page 290*.

H. Brake Master Cylinder Reservoir and Hydraulic Clutch (If Equipped). See “Brake Fluid” under *Brakes on page 306* and *Hydraulic Clutch on page 293*.

I. Engine Air Cleaner/Filter. See *Engine Air Cleaner/Filter on page 288*.

J. Battery. See *Battery on page 309*.

K. Engine Compartment Fuse Block. See *Engine Compartment Fuse Block on page 367*.

Downloaded from www.Manualslib.com manuals search engine

Engine Oil

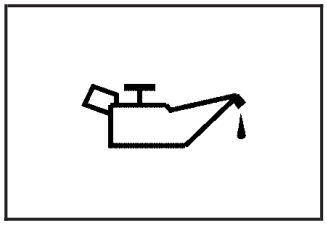

If the engine oil pressure light appears on the instrument cluster, check the engine oil level right away.

For more information, see *Oil Pressure Light on page 173*. You should check the engine oil level regularly; this is an added reminder.

Checking Engine Oil

It is a good idea to check the engine oil every time you get fuel. In order to get an accurate reading, the oil must be warm and the vehicle must be on level ground.

The engine oil dipstick handle is a yellow loop. See *Engine Compartment Overview on page 282* for the location of the engine oil dipstick.

1. Turn off the engine and give the oil several minutes to drain back into the oil pan. If you do not do this, the oil dipstick might not show the actual level.
2. Pull out the dipstick and clean it with a paper towel or cloth, then push it back in all the way. Remove it again, keeping the tip down, and check the level.

Downloaded from www.Manualslib.com manuals search engine

When to Add Engine Oil

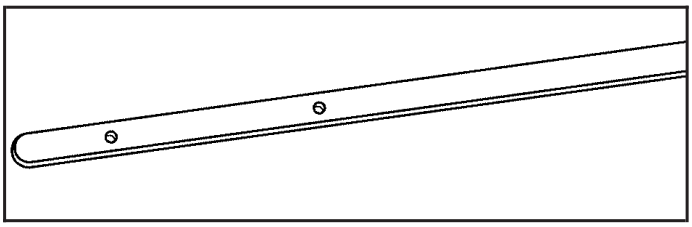

If the oil is below the indent at the tip of the dipstick, you need to add at least one quart/liter of oil. But you must use the right kind. This section explains what kind of oil to use. For engine oil crankcase capacity, see *Capacities and Specifications on page 369*.

Notice: **Do not add too much oil. If the engine has so much oil that the oil level gets above the upper hole, the engine could be damaged.**

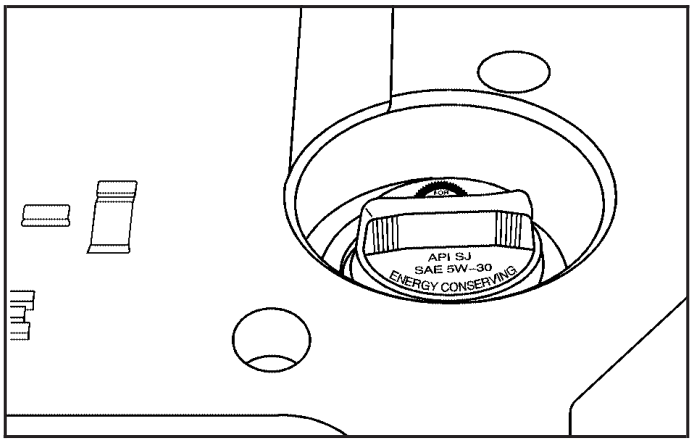

See *Engine Compartment Overview on page 282* for the location of the engine oil fill cap.

Be sure to add enough oil to put the level somewhere in the proper operating range. Push the dipstick all the way back in when you are through.

Downloaded from www.Manualslib.com manuals search engine

What Kind of Engine Oil to Use

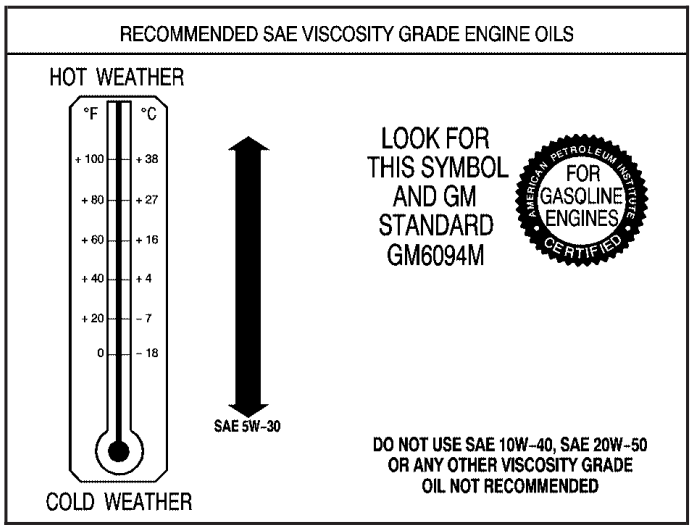

Look for two things:

- GM6094M

  Your vehicle's engine requires oil meeting GM Standard GM6094M. Look for and use only an oil that meets GM Standard GM6094M.

- SAE 5W-30

  As shown in the viscosity chart, SAE 5W-30 is best for your vehicle.

  These numbers on an oil container show its viscosity, or thickness. Do not use other viscosity oils such as SAE 20W-50.

Oils meeting these requirements should also have the starburst symbol on the container. This symbol indicates that the oil has been certified by the American Petroleum Institute (API).

Look for this information on the oil container, and use only those oils that are identified as meeting GM Standard GM6094M and have the starburst symbol on the front of the oil container.

Notice: **Use only engine oil identified as meeting GM Standard GM6094M and showing the American Petroleum Institute Certified For Gasoline Engines starburst symbol. Failure to use the recommended oil can result in engine damage not covered by your warranty.**

GM Goodwrench® oil meets all the requirements for your vehicle.

Downloaded from www.Manualslib.com manuals search engine

If you are in an area of extreme cold, where the temperature falls below –20°F (–29°C), it is recommend that you use either an SAE 5W-30 synthetic oil or an SAE 0W-30 oil. Both provide easier cold starting and better protection for the engine at extremely low temperatures.

Engine Oil Additives

Do not add anything to the oil. The recommended oils with the starburst symbol that meet GM Standard GM6094M are all you need for good performance and engine protection.

When to Change Engine Oil

Change the oil and filter every 5,000 miles (8 000 km) or 3 months, whichever occurs first. See *Scheduled Maintenance on page 377*.

What to Do with Used Oil

Used engine oil contains certain elements that may be unhealthy for your skin and could even cause cancer. Do not let used oil stay on your skin for very long. Clean your skin and nails with soap and water, or a good hand cleaner. Wash or properly dispose of clothing or rags containing used engine oil. See the manufacturer's warnings about the use and disposal of oil products.

Used oil can be a threat to the environment. If you change your own oil, be sure to drain all the oil from the filter before disposal. Never dispose of oil by putting it in the trash, pouring it on the ground, into sewers, or into streams or bodies of water. Instead, recycle it by taking it to a place that collects used oil. If you have a problem properly disposing of used oil, ask your dealer, a service station, or a local recycling center for help.

Downloaded from www.Manualslib.com manuals search engine

Engine Air Cleaner/Filter

The engine air cleaner/filter is in the engine compartment on the driver's side of the vehicle. See *Engine Compartment Overview on page 282* for more information on location.

When to Inspect the Engine Air Cleaner/Filter

If you are driving in dusty/dirty conditions, inspect the air cleaner/filter at each engine oil change. Replace the filter every 30,000 miles (48 000 km) or 24 months, whichever occurs first. See *Part A: Scheduled Maintenance Services on page 376* for more information.

How to Inspect the Engine Air Cleaner/Filter

To inspect the air cleaner/filter remove the filter from the vehicle and lightly shake the filter to release loose dust and dirt. If the filter remains caked with dirt, a new filter is required.

Downloaded from www.Manualslib.com manuals search engine

To inspect or replace the engine air cleaner/filter, do the following:

1. Release the two clips that hold the cover down.
2. Lift the cover off.
3. Inspect or replace the engine air cleaner/filter.
4. Reinstall the cover.

⚠ CAUTION:

Operating the engine with the air cleaner/filter off can cause you or others to be burned. The air cleaner not only cleans the air; it helps to stop flames if the engine backfires. If it is not there and the engine backfires, you could be burned. Do not drive with it off, and be careful working on the engine with the air cleaner/filter off.

Notice: **If the air cleaner/filter is off, a backfire can cause a damaging engine fire. And, dirt can easily get into your engine, which will damage it. Always have the air cleaner/filter in place when you are driving.**

Downloaded from www.Manualslib.com manuals search engine

Automatic Transaxle Fluid

When to Check and Change Automatic Transaxle Fluid

A good time to check your automatic transaxle fluid level is when the engine oil is changed.

Check the fluid in the transaxle and differential at the intervals listed in *Part A: Scheduled Maintenance Services on page 376*, and be sure to use the transaxle fluid listed in *Part D: Recommended Fluids and Lubricants on page 394*.

How to Check Automatic Transaxle Fluid

Because this operation can be a little difficult, you may choose to have this done at the dealership service department.

If you do it yourself, be sure to follow all the instructions here, or you could get a false reading on the dipstick.

Notice: **Too much or too little fluid can damage the transaxle. Too much can mean that some of the fluid could come out and fall on hot engine or exhaust system parts, starting a fire. Too little fluid could cause the transaxle to overheat. Be sure to get an accurate reading if you check the transaxle fluid.**

Wait at least 30 minutes before checking the transaxle fluid level if you have been driving:

- When outside temperatures are above 90°F (32°C).
- At high speed for quite a while.
- In heavy traffic — especially in hot weather.
- While pulling a trailer.

To get the right reading, the fluid should be at normal operating temperature, which is 158°F to 176°F (70°C to 80°C).

Get the vehicle warmed up by driving about 15 miles (24 km) when outside temperatures are above 50°F (10°C). If it is colder than 50°F (10°C), you may have to drive longer.

Downloaded from www.Manualslib.com manuals search engine

Checking the Fluid Level

Prepare your vehicle as follows:

1. Park your vehicle on a level place. Keep the engine running.
2. With the parking brake applied, place the shift lever in PARK (P).
3. With your foot on the brake pedal, move the shift lever through each gear range, pausing for about three seconds in each range. Then, position the shift lever in PARK (P).
4. Let the engine run at idle for three to five minutes.

Then, without shutting off the engine, follow these steps:

The automatic transaxle dipstick has an orange handle and is located near the front of the engine compartment. See *Engine Compartment Overview on page 282* for more information on location.

1. Release the tab and pull out the dipstick and wipe it with a clean rag or paper towel.
2. Push it back in all the way, wait three seconds and then pull it back out again.

3. Check both sides of the dipstick, and read the lower level. The fluid level must be between the two dimples in the hot range.
4. If the fluid level is in the acceptable range, push the dipstick back in all the way; then press the tab down to lock the dipstick in place.

Downloaded from www.Manualslib.com manuals search engine

How to Add Automatic Transaxle Fluid

Refer to the Maintenance Schedule to determine what kind of transaxle fluid to use. See *Part D: Recommended Fluids and Lubricants on page 394*.

If the fluid level is low, add only enough of the proper fluid to bring the level into the area between dimples on the dipstick.

1. Pull out the dipstick.
2. Using a long-neck funnel, add enough fluid at the dipstick hole to bring it to the proper level.

   It does not take much fluid, generally less than one pint (0.5 L). Do not overfill.

Notice: **Use of the incorrect automatic transaxle fluid may damage your vehicle, and the damages may not be covered by your warranty. Always use the automatic transaxle fluid listed in *Part D: Recommended Fluids and Lubricants on page 394*.**

3. After adding fluid, recheck the fluid level as described under "How to Check Automatic Transaxle Fluid," earlier in this section.
4. When the correct fluid level is obtained, push the dipstick back in all the way; then press the tab down to lock the dipstick in place.

Manual Transaxle Fluid

When to Check

A good time to have your manual transaxle fluid level checked is when the engine oil is changed. However, the fluid in your manual transaxle does not require changing.

How to Check

Because this operation can be difficult, you may choose to have this done at your Pontiac dealership service department.

If you do it yourself, be sure to follow all the instructions here, or you could get a false reading.

Notice: **Too much or too little fluid can damage the transaxle. Too much can mean that some of the fluid could come out and fall on hot engine or exhaust system parts, starting a fire. Too little fluid could cause the transaxle to overheat. Be sure to get an accurate reading if you check the transaxle fluid.**

Downloaded from www.Manualslib.com manuals search engine

Check the fluid level only when your engine is off, the vehicle is parked on a level place and the transaxle is cool enough for you to rest your fingers on the transaxle case.

Then, follow these steps:

1. Remove the filler plug.
2. Check that the lubricant level is up to the bottom of the filler plug hole.
3. If the fluid level is good, install the plug and be sure it is fully seated. If the fluid level is low, add more fluid as described in the next steps.

How to Add Fluid

Here is how to add fluid. Refer to the Maintenance Schedule to determine what kind of fluid to use. See *Part D: Recommended Fluids and Lubricants on page 394*.

1. Remove the filler plug.
2. Add fluid at the filler plug hole. Add only enough fluid to bring the fluid level up to the bottom of the filler plug hole.
3. Install the filler plug. Be sure the plug is fully seated.

Hydraulic Clutch

The hydraulic clutch linkage in your vehicle is self-adjusting. The master cylinder reservoir is filled with DOT-3 brake fluid.

It is not necessary to regularly check the fluid unless you suspect there is a leak in the system. Adding fluid will not correct a leak.

The hydraulic clutch and brake master cylinder use the same reservoir.

A fluid loss in this system could indicate a problem. Have the system inspected and repaired.

Downloaded from www.Manualslib.com manuals search engine

When to Check and What to Use

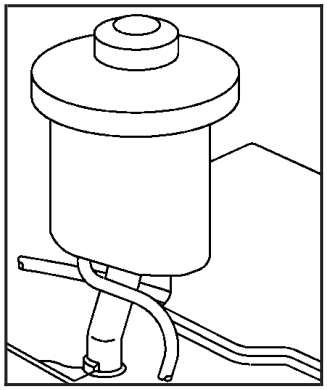

The reservoir is located at the back of the engine compartment, on the driver's side of the vehicle. See *Engine Compartment Overview on page 282* for more information on location.

Refer to the Maintenance Schedule to determine how often you should check the fluid level in your master cylinder reservoir and for the proper fluid. See *Part B: Owner Checks and Services on page 386* and *Part D: Recommended Fluids and Lubricants on page 394*.

How to Check and Add Fluid

Check to make sure that the fluid level is at or above the MIN mark. If the level is below the MIN mark, see the instructions on the reservoir cap.

Engine Coolant

Your vehicle was factory-filled with a coolant developed to last for five years or 150,000 miles (240 000 km), whichever occurs first. When coolant is added or changed, use DEX-COOL® coolant.

The following explains your cooling system and how to add coolant when it is low. If you have a problem with engine overheating, see *Engine Overheating on page 297*.

Downloaded from www.Manualslib.com manuals search engine

A 50/50 mixture of clean, drinkable water and DEX-COOL® coolant will:

- Give freezing protection down to –34°F (– 37°C).
- Give boiling protection up to 265°F (129°C).
- Protect against rust and corrosion.
- Help keep the proper engine temperature.
- Let the warning lights and gages work as they should.

Notice: **Using coolant other than DEX-COOL® may cause premature engine, heater core or radiator corrosion. In addition, the engine coolant may require changing sooner, at 30,000 miles (50 000 km) or 24 months, whichever occurs first. Any repairs would not be covered by your warranty. Always use DEX-COOL® (silicate-free) coolant in your vehicle.**

What to Use

Use a mixture of one-half clean, drinkable water and one-half DEX-COOL® coolant which will not damage aluminum parts. If you use this coolant mixture, you do not need to add anything else.

⚠ CAUTION:

Adding only plain water to your cooling system can be dangerous. Plain water, or some other liquid such as alcohol, can boil before the proper coolant mixture will. Your vehicle's coolant warning system is set for the proper coolant mixture. With plain water or the wrong mixture, your engine could get too hot but you would not get the overheat warning. Your engine could catch fire and you or others could be burned. Use a 50/50 mixture of clean, drinkable water and DEX-COOL® coolant.

Notice: **If you use an improper coolant mixture, your engine could overheat and be badly damaged. The repair cost would not be covered by your warranty. Too much water in the mixture can freeze and crack the engine, radiator, heater core, and other parts.**

Downloaded from www.Manualslib.com manuals search engine

If you have to add coolant more than four times a year, have your dealer check your cooling system.

Notice: **If you use extra inhibitors and/or additives in your vehicle's cooling system, you could damage your vehicle. Use only the proper mixture of the engine coolant listed in this manual for the cooling system. See *Part D: Recommended Fluids and Lubricants on page 394* for more information.**

Checking Coolant

The vehicle must be on a level surface. When your engine is cold, the coolant level should be at LOW, or a little higher. When your engine is warm, the level should be up to FULL, or a little higher.

See *Engine Compartment Overview on page 282* for the location of the coolant recovery tank.

Adding Coolant

If you need more coolant, add the proper DEX-COOL® coolant mixture at the coolant recovery tank, but be careful not to spill it.

⚠ CAUTION:

Turning the radiator pressure cap when the engine and radiator are hot can allow steam and scalding liquids to blow out and burn you badly. With the coolant recovery tank, you will almost never have to add coolant at the radiator. Never turn the radiator pressure cap — even a little — when the engine and radiator are hot.

⚠ CAUTION:

You can be burned if you spill coolant on hot engine parts. Coolant contains ethylene glycol, and it will burn if the engine parts are hot enough. Do not spill coolant on a hot engine.

Downloaded from www.Manualslib.com manuals search engine

Occasionally check the coolant level in the radiator. For information on how to add coolant to the radiator, see *Cooling System on page 299*.

Radiator Pressure Cap

Notice: **If the pressure cap is not tightly installed, coolant loss and possible engine damage may occur. Be sure the cap is properly and tightly secured.**

See *Engine Compartment Overview on page 282* for more information on location.

Engine Overheating

You will find a coolant temperature gage on your vehicle's instrument panel. See *Engine Coolant Temperature Gage on page 169*.

If Steam Is Coming From Your Engine

⚠ CAUTION:

Steam from an overheated engine can burn you badly, even if you just open the hood. Stay away from the engine if you see or hear steam coming from it. Just turn it off and get everyone away from the vehicle until it cools down. Wait until there is no sign of steam or coolant before you open the hood.

If you keep driving when your engine is overheated, the liquids in it can catch fire. You or others could be badly burned. Stop your engine if it overheats, and get out of the vehicle until the engine is cool.

Notice: **If your engine catches fire because you keep driving with no coolant, your vehicle can be badly damaged. The costly repairs would not be covered by your warranty.**

Downloaded from www.Manualslib.com manuals search engine

If No Steam Is Coming From Your Engine

If you get an engine overheat warning but see or hear no steam, the problem may not be too serious. Sometimes the engine can get a little too hot when you:

- Climb a long hill on a hot day.
- Stop after high-speed driving.
- Idle for long periods in traffic.
- Tow a trailer.

If you get the overheat warning with no sign of steam, try this for a minute or so:

1. In heavy traffic, let the engine idle in NEUTRAL (N) while stopped. If it is safe to do so, pull off the road, shift to PARK (P) or NEUTRAL (N) and let the engine idle.
2. Turn on your heater to full hot at the highest fan speed and open the windows as necessary.

If you no longer have the overheat warning, you can drive. Just to be safe, drive slower for about 10 minutes. If the warning does not come back on, you can drive normally.

If the warning continues and you have not stopped, pull over, stop, and park your vehicle right away.

If there is still no sign of steam, you can idle the engine for three minutes while you are parked. If you still have the warning, turn off the engine and get everyone out of the vehicle until it cools down.

You may decide not to lift the hood but to get service help right away.

Downloaded from www.Manualslib.com manuals search engine

Cooling System

When you decide it is safe to lift the hood, here is what you will see:

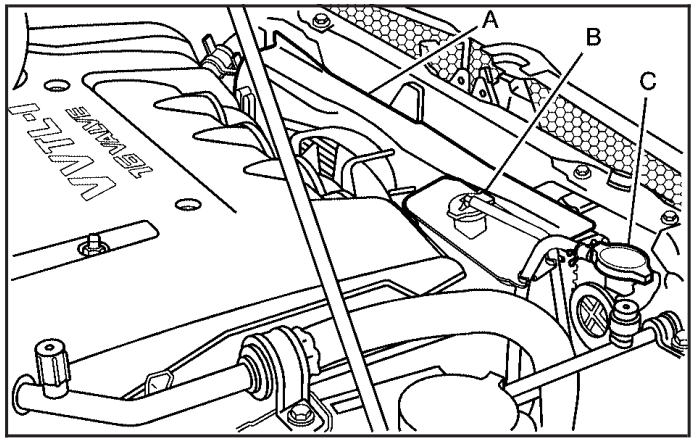

A. Electric Engine Cooling Fan
B. Engine Coolant Recovery Tank
C. Radiator Pressure Cap

⚠ CAUTION:

An electric engine cooling fan under the hood can start up even when the engine is not running and can injure you. Keep hands, clothing, and tools away from any underhood electric fan.

If the coolant inside the coolant recovery tank is boiling, do not do anything else until it cools down. The vehicle should be parked on a level surface.

The coolant level should be at or above the FULL mark. If it is not, you may have a leak at the pressure cap or in the radiator hoses, heater hoses, radiator, water pump, or somewhere else in the cooling system.

Downloaded from www.Manualslib.com manuals search engine

⚠ CAUTION:

Heater and radiator hoses, and other engine parts, can be very hot. Do not touch them. If you do, you can be burned.

Do not run the engine if there is a leak. If you run the engine, it could lose all coolant. That could cause an engine fire, and you could be burned. Get any leak fixed before you drive the vehicle.

If there seems to be no leak, with the engine on, check to see if the electric engine cooling fan is running. If the engine is overheating, the fan should be running. If it is not, your vehicle needs service.

Notice: **Engine damage from running your engine without coolant is not covered by your warranty.**

How to Add Coolant to the Coolant Recovery Tank

If you have not found a problem yet, but the coolant level is not at or above the FULL mark, add a 50/50 mixture of clean, drinkable water and DEX-COOL® coolant at the coolant recovery tank. See *Engine Coolant on page 294* for more information about the proper coolant mixture.

⚠ CAUTION:

Adding only plain water to your cooling system can be dangerous. Plain water, or some other liquid such as alcohol, can boil before the proper coolant mixture will. Your vehicle's coolant warning system is set for the proper coolant mixture. With plain water or the wrong mixture, your engine could get too hot but you would not get the overheat warning. Your engine could catch fire and you or others could be burned. Use a 50/50 mixture of clean, drinkable water and a proper coolant.

Downloaded from www.Manualslib.com manuals search engine

Notice: **In cold weather, water can freeze and crack the engine, radiator, heater core and other parts. Use the recommended coolant and the proper coolant mixture.**

> **⚠ CAUTION:**
>
> **You can be burned if you spill coolant on hot engine parts. Coolant contains ethylene glycol and it will burn if the engine parts are hot enough. Do not spill coolant on a hot engine.**

When the coolant in the coolant recovery tank is at the FULL mark, start your vehicle.

If the overheat warning continues, there is one more thing you can try. You can add the proper coolant mixture directly to the radiator but be sure the cooling system is cool before you do it.

> **⚠ CAUTION:**
>
> **Steam and scalding liquids from a hot cooling system can blow out and burn you badly. They are under pressure, and if you turn the radiator pressure cap — even a little — they can come out at high speed. Never turn the cap when the cooling system, including the radiator pressure cap, is hot. Wait for the cooling system and radiator pressure cap to cool if you ever have to turn the pressure cap.**

Downloaded from www.Manualslib.com manuals search engine

How to Add Coolant to the Radiator

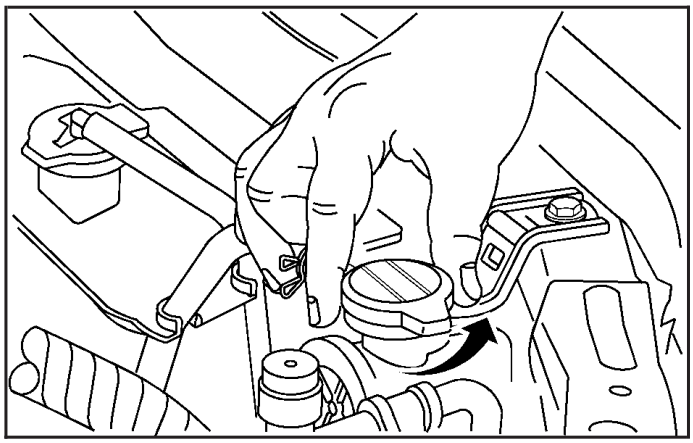

1. You can remove the radiator pressure cap when the cooling system, including the radiator pressure cap and upper radiator hose, is no longer hot. Turn the pressure cap slowly counterclockwise until it first stops. Do not press down while turning the pressure cap.

   If you hear a hiss, wait for that to stop. A hiss means there is still some pressure left.

2. Then keep turning the pressure cap, but now push down as you turn it. Remove the pressure cap.

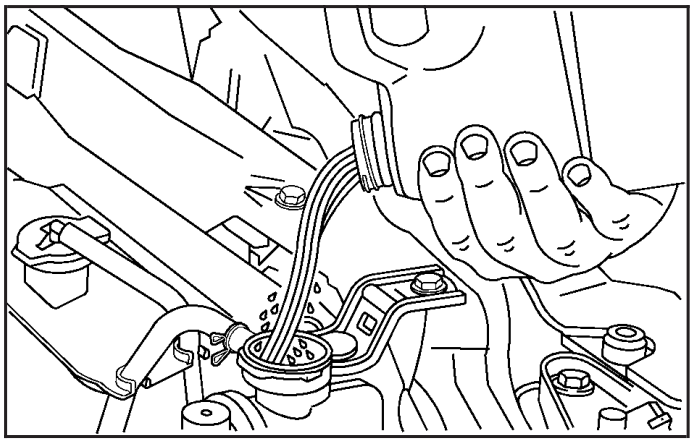

3. Fill the radiator with the proper coolant mixture, up to the base of the filler neck. See *Engine Coolant on page 294* for more information about the proper coolant mixture.

Downloaded from www.Manualslib.com manuals search engine

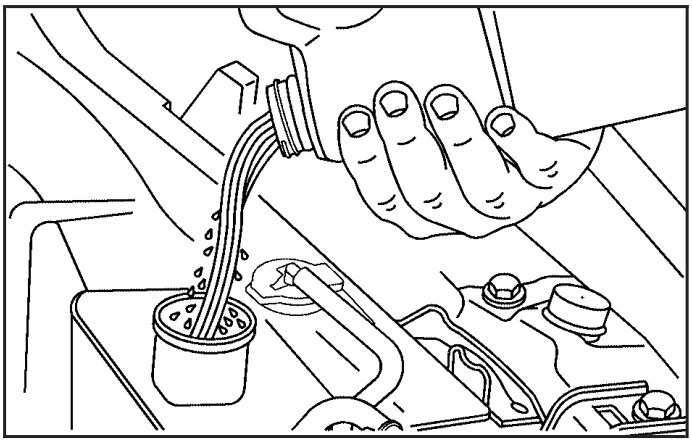

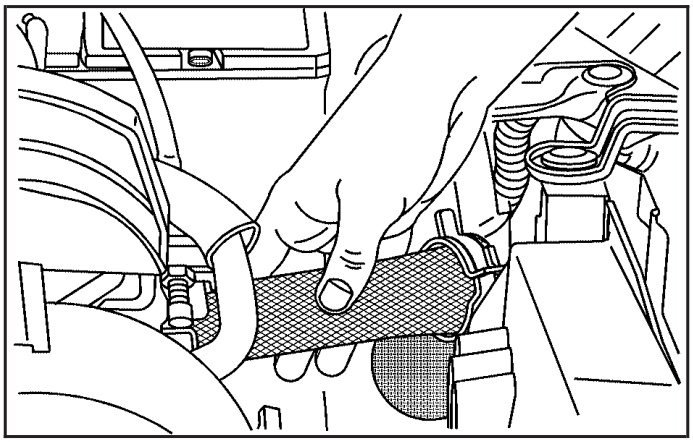

4. Then fill the coolant recovery tank to the FULL mark.
5. Put the cap back on the coolant recovery tank, but leave the radiator pressure cap off.
6. Start the engine and let it run until you can feel the upper radiator hose getting hot. Watch out for the engine cooling fan.
7. By this time, the coolant level inside the radiator filler neck may be lower. If the level is lower, add more of the proper coolant mixture through the filler neck until the level reaches the base of the filler neck.
8. Then replace the pressure cap. At any time during this procedure if coolant begins to flow out of the filler neck, reinstall the pressure cap. Be sure the ears on the pressure cap are in line with the vent tube.

Downloaded from www.Manualslib.com manuals search engine

Power Steering Fluid

The power steering fluid reservoir is located in the engine compartment on the passenger's side of the vehicle. See *Engine Compartment Overview on page 282* for reservoir location.

When to Check Power Steering Fluid

It is not necessary to regularly check power steering fluid unless you suspect there is a leak in the system or you hear an unusual noise. A fluid loss in this system could indicate a problem. Have the system inspected and repaired.

How to Check Power Steering Fluid

You can check your fluid without taking the cap off. Just look at the reservoir.

- When the engine compartment is hot, the level should be between the HOT marks.
- When the engine compartment is cool, the level should be between the COLD marks.

What to Use

To determine what kind of fluid to use, see *Part D: Recommended Fluids and Lubricants on page 394*.

Notice: **When adding power steering fluid or making a complete fluid change, always use the proper fluid. Failure to use the proper fluid can cause leaks and damage hoses and seals.**

Downloaded from www.Manualslib.com manuals search engine

Windshield Washer Fluid

What to Use

When you need windshield washer fluid, be sure to read the manufacturer's instructions before use. If you will be operating your vehicle in an area where the temperature may fall below freezing, use a fluid that has sufficient protection against freezing.

Adding Washer Fluid

If your vehicle has the low windshield washer fluid level warning light, it will come on when the fluid level is too low. See *Low Washer Fluid Warning Light on page 175*.

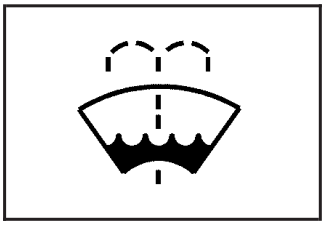

Open the cap with the washer symbol on it. Add washer fluid until the tank is full. See *Engine Compartment Overview on page 282* for reservoir location.

Notice:

- **When using concentrated washer fluid, follow the manufacturer's instructions for adding water.**
- **Do not mix water with ready-to-use washer fluid. Water can cause the solution to freeze and damage your washer fluid tank and other parts of the washer system. Also, water does not clean as well as washer fluid.**
- **Fill your washer fluid tank only three-quarters full when it is very cold. This allows for expansion if freezing occurs, which could damage the tank if it is completely full.**
- **Do not use engine coolant (antifreeze) in your windshield washer. It can damage your washer system and paint.**

Downloaded from www.Manualslib.com manuals search engine

Brakes

Brake Fluid

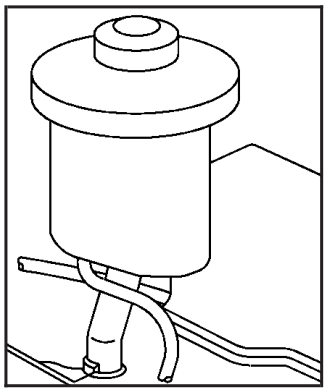

The hydraulic clutch and brake master cylinder use the same reservoir. It is filled with DOT-3 brake fluid. See *Engine Compartment Overview on page 282* for the location of the reservoir.

There are only two reasons why the brake fluid level in the reservoir might go down. The first is that the brake fluid goes down to an acceptable level during normal brake lining wear. When new linings are put in, the fluid level goes back up. The other reason is that fluid is leaking out of the brake system or the hydraulic clutch system. If it is, have that system fixed immediately, since a leak means that the brakes will not work well, or will not work at all.

So, it is not a good idea to top off the brake fluid. Adding brake fluid will not correct a leak. If you add fluid when the linings are worn, then you will have too much fluid when you get new brake linings. You should add or remove brake fluid, as necessary, only when work is done on the brake hydraulic system.

⚠ CAUTION:

If your vehicle has too much brake fluid, it can spill on the engine. The fluid will burn if the engine is hot enough. You or others could be burned, and your vehicle could be damaged. Add brake fluid only when work is done on the brake and/or clutch hydraulic system.

When the brake fluid falls to a low level, the brake warning light will come on. See *Brake System Warning Light on page 166*.

Downloaded from www.Manualslib.com manuals search engine

What to Add

When you do need brake fluid, use only DOT-3 brake fluid. Use new brake fluid from a sealed container only. See *Part D: Recommended Fluids and Lubricants on page 394*.

Always clean the brake fluid reservoir cap and the area around the cap before removing it. This helps keep dirt from entering the reservoir.

⚠ CAUTION:

With the wrong kind of fluid in the brake system, the brakes may not work well, or they may not even work at all. This could cause a crash. Always use the proper brake fluid.

Notice:

- **Using the wrong fluid can badly damage brake system parts. For example, just a few drops of mineral-based oil, such as engine oil, in the brake system can damage brake system parts so badly that they will have to be replaced. Do not let someone put in the wrong kind of fluid.**
- **If you spill brake fluid on your vehicle's painted surfaces, the paint finish can be damaged. Be careful not to spill brake fluid on your vehicle. If you do, wash it off immediately. See *Washing Your Vehicle on page 358*.**

Downloaded from www.Manualslib.com manuals search engine

Brake Wear

Your vehicle has front disc brakes and rear drum brakes.

Disc brake pads have built-in wear indicators that make a high-pitched warning sound when the brake pads are worn and new pads are needed. The sound can come and go or be heard all the time your vehicle is moving, except when you are pushing on the brake pedal firmly.

⚠ CAUTION:

The brake wear warning sound means that soon the brakes will not work well. That could lead to an accident. When you hear the brake wear warning sound, have your vehicle serviced.

Notice: **Continuing to drive with worn-out brake pads could result in costly brake repair.**

Some driving conditions or climates can cause a brake squeal when the brakes are first applied or lightly applied. This does not mean something is wrong with the brakes.

Properly torqued wheel nuts are necessary to help prevent brake pulsation. When tires are rotated, inspect brake pads for wear and evenly tighten wheel nuts in the proper sequence to GM torque specifications.

Rear drum brakes do not have wear indicators, but if you ever hear a rear brake rubbing noise, have the rear brake linings inspected immediately. Also, the rear brake drums should be removed and inspected each time the tires are removed for rotation or changing. When you have the front brake pads replaced, have the rear brakes inspected, too.

Brake linings should always be replaced as complete axle sets.

See *Brake System Inspection on page 393*.

Downloaded from www.Manualslib.com manuals search engine

Brake Pedal Travel

See your dealer if the brake pedal does not return to normal height, or if there is a rapid increase in pedal travel. This could be a sign of brake trouble.

Brake Adjustment

Every time you make a moderate brake stop, the disc brakes adjust for wear. If you rarely make a moderate or heavier stop, the brakes might not adjust correctly. If you drive in that way, then — very carefully — make a few moderate brake stops about every 1,000 miles (1 600 km), so the brakes will adjust properly.

Replacing Brake System Parts

The braking system on a vehicle is complex. Its many parts have to be of top quality and work well together if the vehicle is to have really good braking. Your vehicle was designed and tested with top-quality GM brake parts. When you replace parts of the braking system — for example, when the brake linings wear down and you need new ones put in — be sure you get new approved GM replacement parts. If you do not, the brakes might not work properly. For example, if someone puts in brake linings that are wrong for your vehicle, the balance between the front and rear brakes can change — for the worse. The braking performance you have come to expect can change in many other ways if someone puts in the wrong replacement brake parts.

Battery

Your vehicle has a maintenance free battery. When it is time for a new battery, get one that has the replacement number shown on the original battery's label. We recommend an ACDelco® replacement battery. See *Engine Compartment Overview on page 282* for battery location.

Warning: Battery posts, terminals, and related accessories contain lead and lead compounds, chemicals known to the State of California to cause cancer and reproductive harm. Wash hands after handling.

Downloaded from www.Manualslib.com manuals search engine

Vehicle Storage

If you are not going to drive your vehicle for 25 days or more, remove the black, negative (–) cable from the battery. This will help keep the battery from running down.

⚠ CAUTION:

Batteries have acid that can burn you and gas that can explode. You can be badly hurt if you are not careful. See *Jump Starting on page 310* for tips on working around a battery without getting hurt.

Jump Starting

If your vehicle's battery has run down, you may want to use another vehicle and some jumper cables to start your vehicle. Be sure to use the following steps to do it safely.

⚠ CAUTION:

Batteries can hurt you. They can be dangerous because:

- **They contain acid that can burn you.**
- **They contain gas that can explode or ignite.**
- **They contain enough electricity to burn you.**

If you do not follow these steps exactly, some or all of these things can hurt you.

Notice: **Ignoring these steps could result in costly damage to your vehicle that would not be covered by your warranty.**

Trying to start your vehicle by pushing or pulling it will not work, and it could damage your vehicle.

Downloaded from www.Manualslib.com manuals search engine

1. Check the other vehicle. It must have a 12-volt battery with a negative ground system.

Notice: **If the other vehicle's system is not a 12-volt system with a negative ground, both vehicles can be damaged. Only use vehicles with 12-volt systems with negative grounds to jump start your vehicle.**

2. Get the vehicles close enough so the jumper cables can reach, but be sure the vehicles are not touching each other. If they are, it could cause a ground connection you do not want. You would not be able to start your vehicle, and the bad grounding could damage the electrical systems.

   To avoid the possibility of the vehicles rolling, set the parking brake firmly on both vehicles involved in the jump start procedure. Put an automatic transaxle in PARK (P) or a manual transaxle in NEUTRAL before setting the parking brake.

Notice: **If you leave your radio or other accessories on during the jump starting procedure, they could be damaged. The repairs would not be covered by your warranty. Always turn off your radio and other accessories when jump starting your vehicle.**

3. Turn off the ignition on both vehicles. Unplug unnecessary accessories plugged into the cigarette lighter. Turn off the radio and all lamps that are not needed. This will avoid sparks and help save both batteries. And it could save the radio!

Downloaded from www.Manualslib.com manuals search engine

4. Open the hoods and locate the batteries. Find the positive (+) and negative (–) terminal locations on each vehicle. See *Engine Compartment Overview on page 282* for more information on location.

⚠ CAUTION:

An electric fan can start up even when the engine is not running and can injure you. Keep hands, clothing and tools away from any underhood electric fan.

⚠ CAUTION:

Using a match near a battery can cause battery gas to explode. People have been hurt doing this, and some have been blinded. Use a flashlight if you need more light.

Be sure the battery has enough water. You do not need to add water to the battery installed in your new vehicle. But if a battery has filler caps, be sure the right amount of fluid is there. If it is low, add water to take care of that first. If you don't, explosive gas could be present.

Battery fluid contains acid that can burn you. Do not get it on you. If you accidentally get it in your eyes or on your skin, flush the place with water and get medical help immediately.

Downloaded from www.Manualslib.com manuals search engine

⚠ CAUTION:

Fans or other moving engine parts can injure you badly. Keep your hands away from moving parts once the engine is running.

5. Check that the jumper cables do not have loose or missing insulation. If they do, you could get a shock. The vehicles could be damaged too.

   Before you connect the cables, here are some basic things you should know. Positive (+) will go to positive (+) or to a remote positive (+) terminal if the vehicle has one. Negative (–) will go to a heavy, unpainted metal engine part or to a remote negative (–) terminal if the vehicle has one.

   Do not connect positive (+) to negative (–) or you will get a short that would damage the battery and maybe other parts too. And do not connect the negative (–) cable to the negative (–) terminal on the dead battery because this can cause sparks.

6. Connect the red positive (+) cable to the positive (+) terminal of the dead battery. Use a remote positive (+) terminal if the vehicle has one.
7. Do not let the other end touch metal. Connect it to the positive (+) terminal of the good battery. Use a remote positive (+) terminal if the vehicle has one.

Downloaded from www.Manualslib.com manuals search engine

8. Now connect the black negative (–) cable to the negative terminal of the good battery. Use a remote negative (–) terminal if the vehicle has one.

   Do not let the other end touch anything until the next step. The other end of the negative (–) cable does not go to the dead battery. It goes to a heavy, unpainted metal engine part or to a remote negative (–) terminal on the vehicle with the dead battery.

9. Connect the other end of the negative (–) cable at least 18 inches (45 cm) away from the dead battery, but not near engine parts that move. The electrical connection is just as good there, and the chance of sparks getting back to the battery is much less.

10. Now start the vehicle with the good battery and run the engine for a while.

11. Try to start the vehicle that had the dead battery. If it will not start after a few tries, it probably needs service.

Notice: **If the jumper cables are connected or removed in the wrong order, electrical shorting may occur and damage the vehicle. The repairs would not be covered by your warranty. Always connect and remove the jumper cables in the correct order, making sure that the cables do not touch each other or other metal.**

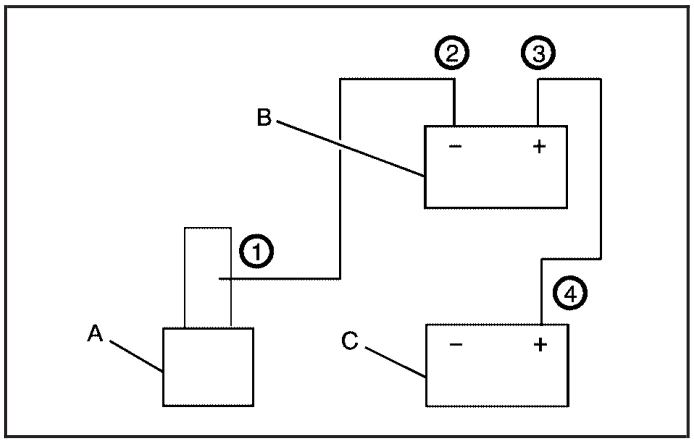

Jumper Cable Removal

A. Heavy, Unpainted Metal Engine Part
B. Good Battery
C. Dead Battery

Downloaded from www.Manualslib.com manuals search engine

To disconnect the jumper cables from both vehicles, do the following:

1. Disconnect the black negative (–) cable from the vehicle that had the dead battery.
2. Disconnect the black negative (–) cable from the vehicle with the good battery.
3. Disconnect the red positive (+) cable from the vehicle with the good battery.
4. Disconnect the red positive (+) cable from the other vehicle.

Bulb Replacement

For the proper type of replacement bulbs, see *Replacement Bulbs on page 320*.

For any bulb changing procedure not listed in this section, contact your dealer.

Halogen Bulbs

⚠ CAUTION:

Halogen bulbs have pressurized gas inside and can burst if you drop or scratch the bulb. You or others could be injured. Be sure to read and follow the instructions on the bulb package.

Downloaded from www.Manualslib.com manuals search engine

Headlamps, Front Turn Signal, and Parking Lamps

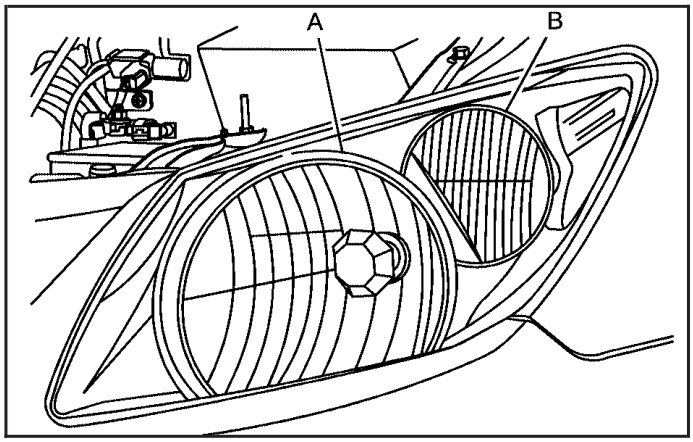

A. Headlamp
B. Turn Signal/Parking Lamp

To replace the headlamp, turn signal, or parking lamp bulb, do the following:

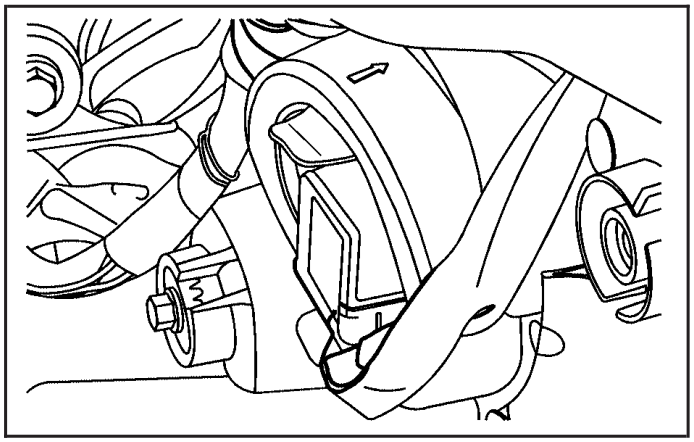

1. Open the hood and locate the lamp assembly.
2. Remove the rubber cover and socket from the headlamp or turn signal/parking lamp.

Downloaded from www.Manualslib.com manuals search engine

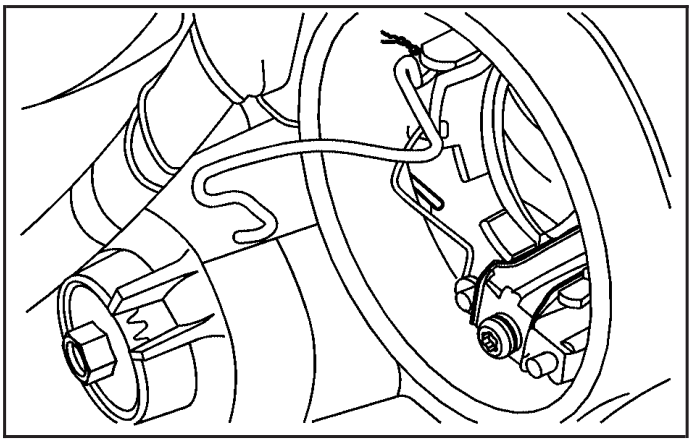

3. Release the retainer clip holding the bulb on the headlamp by pressing down and moving the metal retainer away from you.

   Turn the turn signal/parking lamp bulb socket counterclockwise to remove.
4. Pull the bulb out of the fixture.
5. Reverse the steps to install a new bulb.

Center High-Mounted Stoplamp (CHMSL)

To replace the center high-mounted stoplamp bulb, do the following:

1. Locate the bulb which is on the inside of the liftgate/liftglass near the top.
2. Remove the two clips on both sides of the cover and remove it.

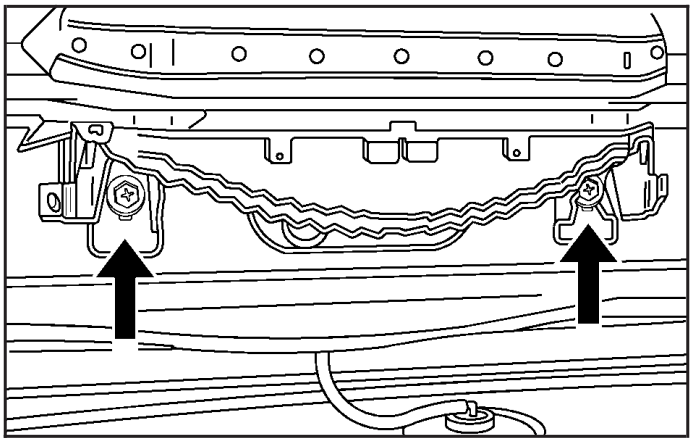

3. Remove the two screws from the CHMSL housing. Then remove the housing to expose the bulb.

Downloaded from www.Manualslib.com manuals search engine

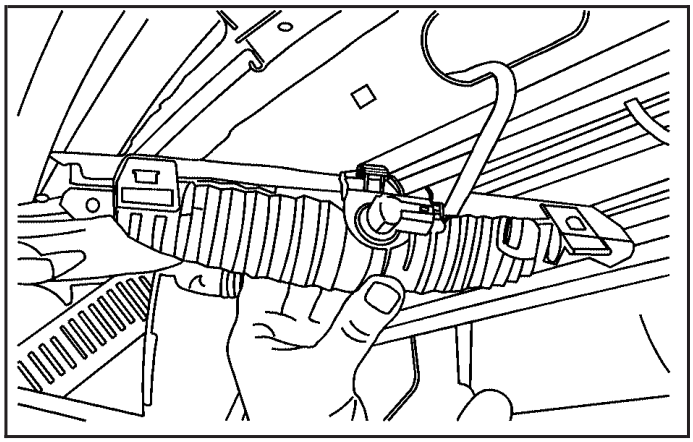

4. Turn the bulb socket counterclockwise and pull it out of the lamp housing.
5. Pull the bulb straight out of the socket.
6. Reverse the previous steps to install a new bulb.

Taillamps, Turn Signal, and Stoplamps

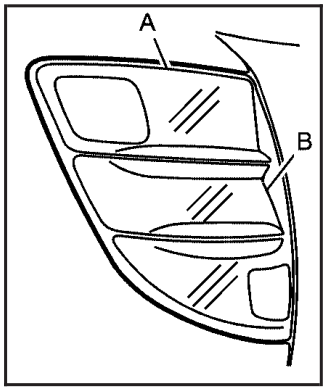

A. Stoplamp/Taillamp
B. Turn Signal Lamp

Downloaded from www.Manualslib.com manuals search engine

To replace the turn signal and/or stop/taillamp bulbs, do the following:

1. Remove the storage compartment cover in the rear cargo area of the vehicle to access the bulbs.

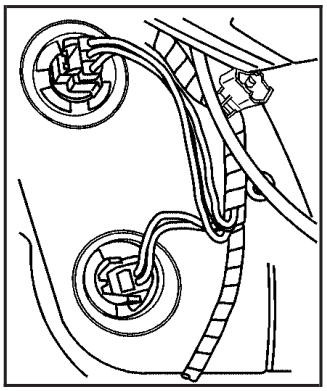

2. Turn the bulb socket counterclockwise and pull it out of the lamp housing.
3. Pull the bulb straight out of the socket.
4. Reverse the previous steps to install a new bulb.
5. Reinstall the cover.

Downloaded from www.Manualslib.com manuals search engine

Back-Up Lamps

The back-up lamp bulb is located in the bumper.

To replace the back-up lamp bulb, do the following:

1. Reach up under the rear fascia to locate the back-up lamp housing.
2. Turn the bulb socket counterclockwise and pull it out of the lamp housing.
3. Pull the bulb straight out of the socket.
4. Reverse the previous steps to install a new bulb.

Replacement Bulbs

Exterior Lamp	Bulb Number
Back-Up Lamp	7440
CHMSL	921
Front Turn Signal and Parking Lamp	1157NA
Headlamp High/Low-Beam	9003
Rear Turn Signal	7440
Stoplamp/Taillamp	7443

For replacement bulbs not listed here, contact your dealer.

Downloaded from www.Manualslib.com manuals search engine

Windshield Wiper Blade Replacement

Windshield wiper blades should be inspected at least twice a year for wear or cracking. See “Wiper Blade Check” under *At Least Twice a Year on page 387* for more information.

Replacement blades come in different types and are removed in different ways. Here’s how to remove the wiper blade:

1. Pull the windshield wiper arm away from the windshield.

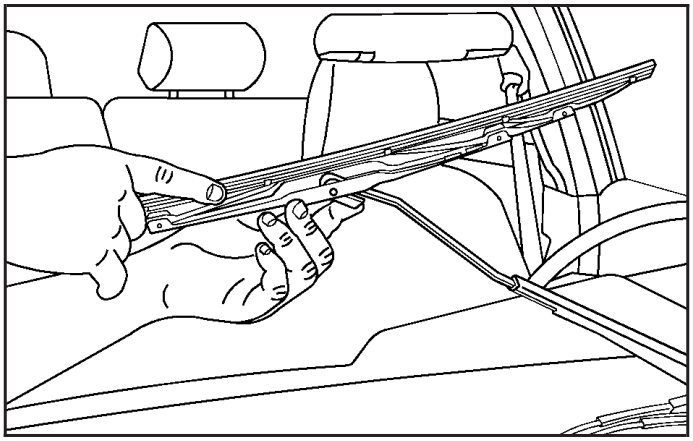

2. Push the release lever and slide the wiper assembly toward the driver’s side of the vehicle.
3. Install a new blade by reversing Steps 1 and 2.

Downloaded from www.Manualslib.com manuals search engine

Tires

Your new vehicle comes with high-quality tires made by a leading tire manufacturer. If you ever have questions about your tire warranty and where to obtain service, see your GM Warranty booklet for details. For additional information refer to the tire manufacturer's booklet included with your vehicle.

⚠ CAUTION:

Poorly maintained and improperly used tires are dangerous.

- **Overloading your vehicle's tires can cause overheating as a result of too much friction. You could have an air-out and a serious accident. See *Loading Your Vehicle on page 253*.**

CAUTION: (Continued)

CAUTION: (Continued)

- **Underinflated tires pose the same danger as overloaded tires. The resulting accident could cause serious injury. Check all tires frequently to maintain the recommended pressure. Tire pressure should be checked when your vehicle's tires are cold. See *Inflation - Tire Pressure on page 329*.**
- **Overinflated tires are more likely to be cut, punctured, or broken by a sudden impact — such as when you hit a pothole. Keep tires at the recommended pressure.**
- **Worn, old tires can cause accidents. If the tire's tread is badly worn, or if your vehicle's tires have been damaged, replace them.**

Downloaded from www.Manualslib.com manuals search engine

Tire Sidewall Labeling

Useful information about a tire is molded into its sidewall. The examples below show a typical passenger car tire and a compact spare tire sidewall.

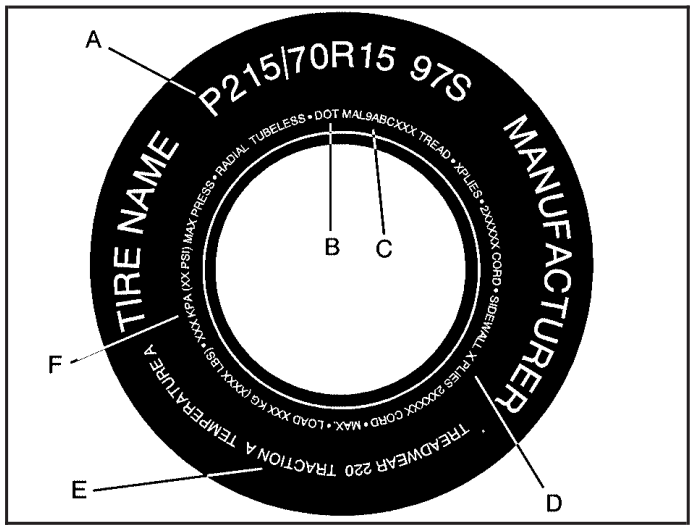

Passenger Car Tire Example

(A) Tire Size: The tire size is a combination of letters and numbers used to define a particular tire's width, height, aspect ratio, construction type and service description. See the "Tire Size" illustration later in this section for more detail.

(B) DOT (Department of Transportation): The Department of Transportation (DOT) code indicates that the tire is in compliance with the U.S. Department of Transportation Motor Vehicle Safety Standards.

(C) Tire Identification Number (TIN): The letters and numbers following DOT code are the Tire Identification Number (TIN). The TIN shows the manufacturer and plant code, tire size, and date the tire was manufactured. The TIN is molded onto both sides of the tire, although only one side may have the date of manufacture.

(D) Tire Ply Material: The type of cord and number of plies in the sidewall and under the tread.

Downloaded from www.Manualslib.com manuals search engine

(E) Uniform Tire Quality Grading (UTQG): Tire manufacturers are required to grade tires based on three performance factors: treadwear, traction and temperature resistance. For more information see *Uniform Tire Quality Grading on page 338*.

(F) Maximum Cold Inflation Load Limit: Maximum load that can be carried and the maximum pressure needed to support that load. For information on recommended tire pressure see *Inflation - Tire Pressure on page 329* and *Loading Your Vehicle on page 253*.

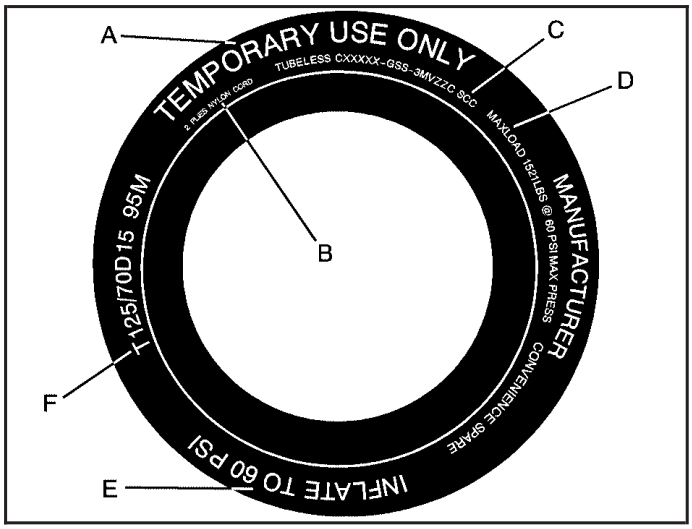

Compact Spare Tire Example

(A) Temporary Use Only: The compact spare tire or temporary use tire has a tread life of approximately 3,000 miles (5 000 km) and should not be driven at speeds over 65 mph (105 km/h). The compact spare tire is for emergency use when a regular road tire has lost air and gone flat. See *Compact Spare Tire on page 354* and *If a Tire Goes Flat on page 342*.

Downloaded from www.Manualslib.com manuals search engine

(B) Tire Ply Material: The type of cord and number of plies in the sidewall and under the tread.

(C) Tire Identification Number (TIN): The Tire Identification Number (TIN). The TIN shows the manufacturer and plant code, tire size, and date the tire was manufactured. The TIN is molded onto both sides of the tire, although only one side may have the date of manufacture.

(D) Maximum Cold Inflation Load Limit: Maximum load that can be carried and the maximum pressure needed to support that load. See *Compact Spare Tire on page 354* and *Loading Your Vehicle on page 253*.

(E) Tire Inflation: The temporary use tire or compact spare tire should be inflated to 60 psi (420 kPa). For more information on tire pressure and inflation see *Inflation - Tire Pressure on page 329*.

(F) Tire Size: A combination of letters and numbers define a tire's width, height, aspect ratio, construction type and service description. The letter T as the first character in the tire size means the tire is for temporary use only.

Tire Size

The following illustration shows an example of a typical passenger car tire size.

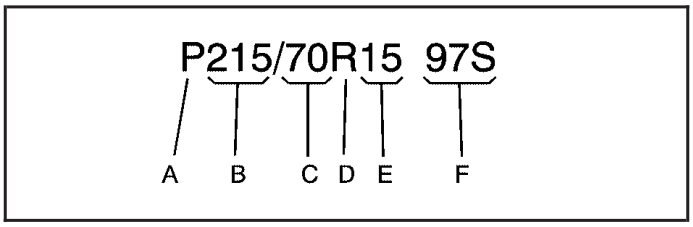

(A) Passenger (P-Metric) Tire: The United States version of a metric tire sizing system. The letter P as the first character in the tire size means a passenger vehicle tire engineered to standards set by the U. S. Tire and Rim Association.

(B) Tire Width: The three-digit number indicates the tire section width in millimeters from sidewall to sidewall.

(C) Aspect Ratio: A two-digit number that indicates the tire height-to-width measurements. For example, if the tire size aspect ratio is 70, as shown in item C of the illustration, it would mean that the tire's sidewall is 70% as high as it is wide.

Downloaded from www.Manualslib.com manuals search engine

(D) Construction Code: A letter code is used to indicate the type of ply construction in the tire. The letter R means radial ply construction; the letter D means diagonal or bias ply construction; and the letter B means belted-bias ply construction.

(E) Rim Diameter: Diameter of the wheel in inches.

(F) Service Description: These characters represent the load range and the speed rating of a tire. The load range represents the load carry capacity a tire is certified to carry. The speed rating is the maximum speed a tire is certified to carry a load. Speed ratings range from A to Z.

Tire Terminology and Definitions

Air Pressure: The amount of air inside the tire pressing outward on each square inch of the tire. Air pressure is expressed in pounds per square inch (psi) or kilopascal (kPa).

Accessory Weight: This means the combined weight of optional accessories. Some examples of optional accessories are, automatic transmission/transaxle, power steering, power brakes, power windows, power seats, and air conditioning.

Aspect Ratio: The relationship of a tire's height to its width.

Belt: A rubber coated layer of cords that is located between the plies and the tread. Cords may be made from steel or other reinforcing materials.

Bead: The tire bead contains steel wires wrapped by steel cords that hold the tire onto the rim.

Bias Ply Tire: A pneumatic tire in which the plies are laid at alternate angles less than 90 degrees to the centerline of the tread.

Cold Tire Pressure: The amount of air pressure in a tire, measured in pounds per square inch (psi) or kilopascals (kPa) before a tire has built up heat from driving. See *Inflation - Tire Pressure on page 329*.

Curb Weight: This means the weight of a motor vehicle with standard and optional equipment including the maximum capacity of fuel, oil, and coolant, but without passengers and cargo.

Downloaded from www.Manualslib.com manuals search engine

DOT Markings: A code molded into the sidewall of a tire signifying that the tire is in compliance with the U.S. Department of Transportation (DOT) motor vehicle safety standards. The DOT code includes the Tire Identification Number (TIN), an alphanumeric designator which can also identify the tire manufacturer, production plant, brand, and date of production.

GVWR: Gross Vehicle Weight Rating. See *Loading Your Vehicle on page 253*.

GAWR FRT: Gross Axle Weight Rating for the front axle. See *Loading Your Vehicle on page 253*.

GAWR RR: Gross Axle Weight Rating for the rear axle. See *Loading Your Vehicle on page 253*.

Intended Outboard Sidewall: The side of an asymmetrical tire, that must always face outward when mounted on a vehicle.

Kilopascal (kPa): The metric unit for air pressure.

Light Truck (LT-Metric) Tire: A tire used on light duty trucks and some multipurpose passenger vehicles.

Load Index: An assigned number ranging from 1 to 279 that corresponds to the load carrying capacity of a tire.

Maximum Inflation Pressure: The maximum air pressure to which a cold tire may be inflated. The maximum air pressure is molded onto the sidewall.

Maximum Load Rating: The load rating for a tire at the maximum permissible inflation pressure for that tire.

Maximum Loaded Vehicle Weight: The sum of curb weight, accessory weight, vehicle capacity weight, and production options weight.

Normal Occupant Weight: The number of occupants a vehicle is designed to seat multiplied by 150 lbs (68 kg). See *Loading Your Vehicle on page 253*.

Occupant Distribution: Designated seating positions.

Outward Facing Sidewall: The side of an asymmetrical tire that has a particular side that faces outward when mounted on a vehicle. The side of the tire that contains a whitewall, bears white lettering, or bears manufacturer, brand, and/or model name molding that is higher or deeper than the same moldings on the other sidewall of the tire.

Downloaded from www.Manualslib.com manuals search engine

Passenger (P-Metric) Tire: A tire used on passenger cars and some light duty trucks and multipurpose vehicles.

Recommended Inflation Pressure: Vehicle manufacturer's recommended tire inflation pressure as shown on the tire placard. See *Inflation - Tire Pressure on page 329* and *Loading Your Vehicle on page 253*.

Radial Ply Tire: A pneumatic tire in which the ply cords that extend to the beads are laid at 90 degrees to the centerline of the tread.

Rim: A metal support for a tire and upon which the tire beads are seated.

Sidewall: The portion of a tire between the tread and the bead.

Speed Rating: An alphanumeric code assigned to a tire indicating the maximum speed at which a tire can operate.

Traction: The friction between the tire and the road surface. The amount of grip provided.

Tread: The portion of a tire that comes into contact with the road.

Treadwear Indicators: Narrow bands, sometimes called wear bars, that show across the tread of a tire when only 1/16 inch (1.6 mm) of tread remains. See *When It Is Time for New Tires on page 335*.

UTQGS (Uniform Tire Quality Grading Standards): A tire information system that provides consumers with ratings for a tire's traction, temperature, and treadwear. Ratings are determined by tire manufacturers using government testing procedures. The ratings are molded into the sidewall of the tire. See *Uniform Tire Quality Grading on page 338*.

Vehicle Capacity Weight: The number of designated seating positions multiplied by 150 lbs (68 kg) plus the rated cargo load. See *Loading Your Vehicle on page 253*.

Vehicle Maximum Load on the Tire: Load on an individual tire due to curb weight, accessory weight, occupant weight, and cargo weight.

Vehicle Placard: A label permanently attached to a vehicle showing the vehicle's capacity weight and the original equipment tire size and recommended inflation pressure. See "Tire and Loading Information Label" under *Loading Your Vehicle on page 253*.

Downloaded from www.Manualslib.com manuals search engine

Inflation - Tire Pressure

Tires need the correct amount of air pressure to operate effectively.

Notice: **Do not let anyone tell you that under-inflation or over-inflation is all right. It is not. If your tires do not have enough air (under-inflation), you can get the following:**

- **Too much flexing**
- **Too much heat**
- **Tire overloading**
- **Premature or irregular wear**
- **Poor handling**
- **Reduced fuel economy**

If your tires have too much air (over-inflation), you can get the following:

- **Unusual wear**
- **Poor handling**
- **Rough ride**
- **Needless damage from road hazards**

A Tire and Loading Information label is attached to the vehicle's center pillar (B-pillar). This label shows your vehicle's original equipment tires and the correct inflation pressures for your tires when they are cold. The recommended cold tire inflation pressure, shown on the label, is the minimum amount of air pressure needed to support your vehicle's maximum load carrying capacity.

For additional information regarding how much weight your vehicle can carry, and an example of the Tire and Loading Information label, see *Loading Your Vehicle on page 253*. How you load your vehicle affects vehicle handling and ride comfort. Never load your vehicle with more weight than it was designed to carry.

When to Check

Check your tires once a month or more. Do not forget to check the compact spare tire, it should be at 60 psi (420 kPa). For additional information regarding the compact spare tire, see *Compact Spare Tire on page 354*.

Downloaded from www.Manualslib.com manuals search engine

How to Check

Use a good quality pocket-type gage to check tire pressure. You cannot tell if your tires are properly inflated simply by looking at them. Radial tires may look properly inflated even when they are under-inflated. Check the tire's inflation pressure when the tires are cold. Cold means your vehicle has been sitting for at least three hours or driven no more than 1 mile (1.6 km).

Remove the valve cap from the tire valve stem. Press the tire gage firmly onto the valve to get a pressure measurement. If the cold tire inflation pressure matches the recommended pressure on the Tire and Loading Information label, no further adjustment is necessary. If the inflation pressure is low, add air until you reach the recommended amount.

If you overfill the tire, release air by pushing on the metal stem in the center of the tire valve. Re-check the tire pressure with the tire gage.

Be sure to put the valve caps back on the valve stems. They help prevent leaks by keeping out dirt and moisture.

Tire Pressure Monitor System

Your vehicle has a Tire Pressure Monitor System (TPMS). This feature is designed to alert you when the system detects a large change in the pressure of one tire. The system cannot alert you before you drive that a tire is low or flat. You must begin driving before the system works properly. The TPMS works with the brake control system and is designed to detect differences in the tire rotation speeds that are caused by changes in tire pressure. The TPMS does not replace normal tire maintenance, see *Tires on page 322*, *Tire Inspection and Rotation on page 333* and *When It Is Time for New Tires on page 335*.

Downloaded from www.Manualslib.com manuals search engine

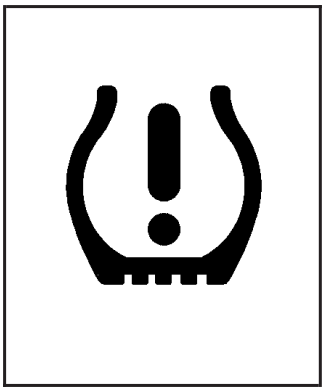

This light, on the instrument panel cluster, comes on when the tire pressure monitoring system detects a low-tire condition.

This light also comes on for a few seconds and then go off when you turn the ignition to ON. This indicates that the TPMS is functioning properly. If the low-tire pressure warning light comes on while driving your vehicle, the system may have detected a low-tire condition. You need to stop as soon as possible and check your tires for damage. If a tire is flat, see *If a Tire Goes Flat on page 342* and *Changing a Flat Tire on page 343*. Also check the tire pressure in all four tires, and set them to the specified level shown on the Tire and Loading Information label.

See *Inflation - Tire Pressure on page 329* and *Loading Your Vehicle on page 253* for additional information.

Note: The tire pressure monitoring system on your vehicle warns you when one of the tires is significantly under-inflated and when some combinations of the tires are significantly under-inflated. However, there are other combinations of significantly under-inflated tires for which the tire pressure monitoring system might not give a warning. These other combinations are relatively common, accounting for approximately half the instances in which vehicles have significantly under-inflated tires. For example, the system might not warn you when both tires on the same side or on the same axle of your vehicle are significantly under-inflated. It is particularly important, therefore, to check the tire pressure in all of the tires regularly and maintain proper pressure.

In order for the tire pressure monitoring system to work properly you need to reset (initialize) the tire pressure monitoring system. Any time you check and/or adjust a tire's pressure, repair or replace a tire or wheel, or rotate the tires the tire pressure monitor system needs to be reset.

Downloaded from www.Manualslib.com manuals search engine

Do not reset (initialize) the system without first correcting the cause of the low-tire condition. If the system is reset when the tire pressures are incorrect, the system will not function properly and might not alert you when a tire is low.

To reset (initialize) the system:

1. Park the vehicle at a safe place and apply the parking brake. Turn the engine off.
2. Turn the ignition to ON with the engine off.

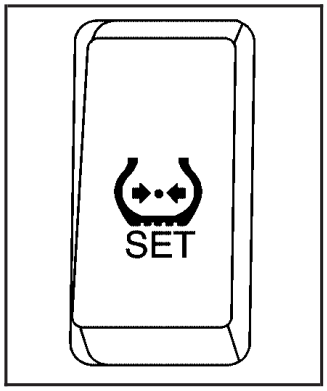

3. If the low-tire pressure warning light is on, push the SET (reset) button for a few seconds.

   The reset button is on the instrument panel to the left of the steering wheel. The low-tire warning light should go off.

4. Press and hold the SET (reset) button until the low-tire warning light comes on and flashes on/off three times. The tire pressure warning reset button starts the reset (initialization) process.

   If the low-tire pressure warning light does not flash while you hold the reset button, the system might be malfunctioning and needs service. See your GM dealer for service.

The system completes the reset (initialization) process after driving at vehicle speeds of at least 19 mph (30 km/h) to 62 mph (100 km/h) for more than one hour. Do not push the SET (reset) button while driving. If you do the initialization process is cancelled. The initialization process can take up to approximately one hour of driving under the following conditions:

- The vehicle speed is between 31 mph (50 km/h) and 62 mph (100 km/h).
- The roads are dry, smooth, and straight.
- The number of passengers is one or two (including the driver).

Downloaded from www.Manualslib.com manuals search engine

The low-tire pressure warning light may not come on even if the tire inflation pressure is low, or it could come on when the tire inflation pressure is set correctly under the following circumstances:

- A compact spare tire, snow tires, or tire chains are installed on your vehicle.
- The tires are over-inflated, or the tire inflation pressure suddenly drops due to a tire bursting or other causes.
- The vehicle is driven on a slippery road surface such as rough or frozen roads.
- The vehicle speed is less than 19 mph (30 km/h), and the driving duration is less than five minutes.
- The tires are made by a different manufacturer or differ in tread pattern than the original equipment tires.
- Rapid acceleration/deceleration or multiple consecutive sharp turns.
- Towing a trailer.
- The vehicle is loaded over the limit or not balanced properly.
- The initialization (reset) procedure was not performed correctly after replacing or rotating tires or wheels.
- The outside temperature is below 32°F (0°C) or above 104°F (40°C).

Tire Inspection and Rotation

Tires should be rotated every 5,000 to 8,000 miles (8 000 to 13 000 km).

Any time you notice unusual wear, rotate your tires as soon as possible and check wheel alignment. Also check for damaged tires or wheels. See *When It Is Time for New Tires on page 335* and *Wheel Replacement on page 340* for more information.

The purpose of regular rotation is to achieve more uniform wear for all tires on the vehicle. The first rotation is the most important. See *Part A: Scheduled Maintenance Services on page 376* for scheduled rotation intervals.

Downloaded from www.Manualslib.com manuals search engine

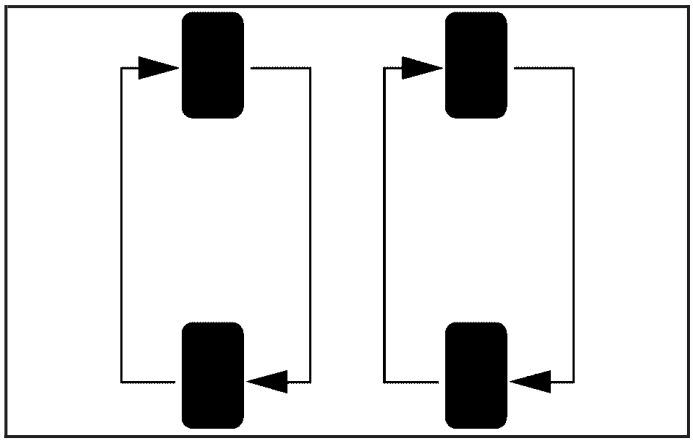

When rotating your tires, always use the correct rotation pattern shown here.

Tires should only be moved from front to rear and rear to front on the same side of the vehicle.

Do not include the compact spare tire in your tire rotation.

After the tires have been rotated, adjust the front and rear inflation pressures to the amounts shown on the Tire and Loading Information label.

Make certain that all wheel nuts are properly tightened. See “Wheel Nut Torque” under *Capacities and Specifications on page 369*.

⚠ CAUTION:

Rust or dirt on a wheel, or on the parts to which it is fastened, can make wheel nuts become loose after time. The wheel could come off and cause an accident. When you change a wheel, remove any rust or dirt from places where the wheel attaches to the vehicle. In an emergency, you can use a cloth or a paper towel to do this; but be sure to use a scraper or wire brush later, if needed, to get all the rust or dirt off. See *Changing a Flat Tire on page 343*.

Vehicles equipped with a tire pressure monitoring system will need to reset (initialize) the system after each tire rotation. See *Tire Pressure Monitor System on page 330*.

Downloaded from www.Manualslib.com manuals search engine

When It Is Time for New Tires

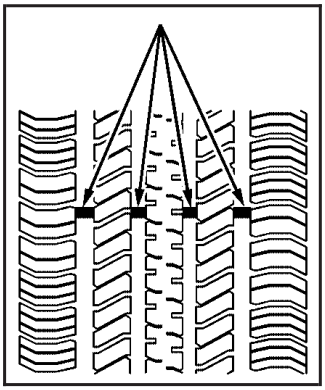

One way to tell when it is time for new tires is to check the treadwear indicators, which will appear when your tires have only 1/16 inch (1.6 mm) or less of tread remaining.

You need a new tire if any of the following statements are true:

- You can see the indicators at three or more places around the tire.
- You can see cord or fabric showing through the tire's rubber.
- The tread or sidewall is cracked, cut, or snagged deep enough to show cord or fabric.
- The tire has a bump, bulge, or split.
- The tire has a puncture, cut, or other damage that cannot be repaired well because of the size or location of the damage.

Downloaded from www.Manualslib.com manuals search engine

Buying New Tires

GM has developed and matched specific tires for your vehicle. If you need replacement tires, GM strongly recommends that you get tires that are the same size, brand, load range, speed rating, and construction type (radial and bias-belted tires) as your vehicle's original tires. This way, your vehicle will continue to have tires that are designed to give the same performance and vehicle safety, during normal use, as the original tires. See *Tire Sidewall Labeling on page 323* for additional information.

⚠ CAUTION:

Mixing tires could cause you to lose control while driving. If you mix tires of different sizes, brands, or types (radial and bias-belted tires), the vehicle may not handle properly, and you could have a crash. Using tires of different sizes,

CAUTION: (Continued)

CAUTION: (Continued)

brands, or types may also cause damage to your vehicle. Be sure to use the correct size, brand, and type of tires on all wheels. It is all right to drive with your compact spare temporarily, as it was developed for use on your vehicle. See *Compact Spare Tire on page 354*.

⚠ CAUTION:

If you use bias-ply tires on your vehicle, the wheel rim flanges could develop cracks after many miles of driving. A tire and/or wheel could fail suddenly, causing a crash. Use only radial-ply tires with the wheels on your vehicle.

Downloaded from www.Manualslib.com manuals search engine

Your vehicle's original equipment tires are listed on the Tire and Loading Information Label. This label is attached to the vehicle's center pillar (B-pillar). See *Loading Your Vehicle on page 253*, for more information about the Tire and Loading Information Label.

Different Size Tires and Wheels

If you add wheels or tires that are a different size than your original equipment wheels and tires, this may affect the way your vehicle performs, including its braking, ride and handling characteristics, stability, and resistance to rollover. Additionally, if your vehicle has electronic systems such as, anti-lock brakes, traction control, and electronic stability control, the performance of these systems can be affected.

⚠ CAUTION:

If you add different sized wheels, your vehicle may not provide an acceptable level of performance and safety if tires not recommended for those wheels are selected. You may increase the chance that you will crash and suffer serious injury. Only use GM specific wheel and tire systems developed for your vehicle, and have them properly installed by a GM certified technician.

See *Buying New Tires on page 336* and *Accessories and Modifications on page 272* for additional information.

Downloaded from www.Manualslib.com manuals search engine

Uniform Tire Quality Grading

Quality grades can be found where applicable on the tire sidewall between tread shoulder and maximum selection width. For example:

Treadwear 200 Traction AA Temperature A

The following information relates to the system developed by the Unites States National Highway Traffic Safety Administration (NHTSA), which grades tires by treadwear, traction, and temperature performance. This applies only to vehicles sold in the United States. The grades are molded on the sidewalls of most passenger car tires. The Uniform Tire Quality Grading (UTQG) system does not apply to deep tread, winter-type snow tires, space-saver, or temporary use spare tires, tires with nominal rim diameters of 10 to 12 inches (25 to 30 cm), or to some limited-production tires.

While the tires available on General Motors passenger cars and light trucks may vary with respect to these grades, they must also conform to federal safety requirements.

Treadwear

The treadwear grade is a comparative rating based on the wear rate of the tire when tested under controlled conditions on a specified government test course. For example, a tire graded 150 would wear one and a half (1½) times as well on the government course as a tire graded 100. The relative performance of tires depends upon the actual conditions of their use, however, and may depart significantly from the norm due to variations in driving habits, service practices, and differences in road characteristics and climate.

Traction — AA, A, B, C

The traction grades, from highest to lowest, are AA, A, B, and C. Those grades represent the tire's ability to stop on wet pavement as measured under controlled conditions on specified government test surfaces of asphalt and concrete. A tire marked C may have poor traction performance.

Warning: The traction grade assigned to this tire is based on straight-ahead braking traction tests, and does not include acceleration, cornering, hydroplaning, or peak traction characteristics.

Downloaded from www.Manualslib.com manuals search engine

Temperature — A, B, C

The temperature grades are A (the highest), B, and C, representing the tire's resistance to the generation of heat and its ability to dissipate heat when tested under controlled conditions on a specified indoor laboratory test wheel. Sustained high temperature can cause the material of the tire to degenerate and reduce tire life, and excessive temperature can lead to sudden tire failure. The grade C corresponds to a level of performance which all passenger car tires must meet under the Federal Motor Vehicle Safety Standard No. 109. Grades B and A represent higher levels of performance on the laboratory test wheel than the minimum required by law.

Warning: The temperature grade for this tire is established for a tire that is properly inflated and not overloaded. Excessive speed, underinflation, or excessive loading, either separately or in combination, can cause heat buildup and possible tire failure.

Wheel Alignment and Tire Balance

The tires and wheels on your vehicle were aligned and balanced carefully at the factory to give you the longest tire life and best overall performance. Adjustments to wheel alignment and tire balancing will not be necessary on a regular basis. However, if you notice unusual tire wear or your vehicle pulling to one side or the other, the alignment may need to be checked. If you notice your vehicle vibrating when driving on a smooth road, your tires and wheels may need to be rebalanced. See your dealer for proper diagnosis.

Downloaded from www.Manualslib.com manuals search engine

Wheel Replacement

Replace any wheel that is bent, cracked, or badly rusted or corroded. If wheel nuts keep coming loose, the wheel, wheel bolts, and wheel nuts should be replaced. If the wheel leaks air, replace it (except some aluminum wheels, which can sometimes be repaired). See your dealer if any of these conditions exist.

Your dealer will know the kind of wheel you need.

Each new wheel should have the same load-carrying capacity, diameter, width, offset and be mounted the same way as the one it replaces.

If you need to replace any of your wheels, wheel bolts, or wheel nuts, replace them only with new GM original equipment parts. This way, you will be sure to have the right wheel, wheel bolts, and wheel nuts for your vehicle.

⚠ CAUTION:

Using the wrong replacement wheels, wheel bolts, or wheel nuts on your vehicle can be dangerous. It could affect the braking and handling of your vehicle, make your tires lose air and make you lose control. You could have a collision in which you or others could be injured. Always use the correct wheel, wheel bolts, and wheel nuts for replacement.

Notice: **The wrong wheel can also cause problems with bearing life, brake cooling, speedometer or odometer calibration, headlamp aim, bumper height, vehicle ground clearance, and tire or tire chain clearance to the body and chassis.**

See *Changing a Flat Tire on page 343* for more information.

Downloaded from www.Manualslib.com manuals search engine

Used Replacement Wheels

⚠ CAUTION:

Putting a used wheel on your vehicle is dangerous. You cannot know how it has been used or how far it has been driven. It could fail suddenly and cause a crash. If you have to replace a wheel, use a new GM original equipment wheel.

Tire Chains

Notice: **Use tire chains only where legal and only when you must. Use only SAE Class "S" type chains that are the proper size for your tires. Install them on the front tires and tighten them as tightly as possible with the ends securely fastened. Drive slowly and follow the chain manufacturer's instructions. If you can hear the chains contacting your vehicle, stop and retighten them. If the contact continues, slow down until it stops. Driving too fast or spinning the wheels with chains on will damage your vehicle.**

Downloaded from www.Manualslib.com manuals search engine

If a Tire Goes Flat

It is unusual for a tire to blowout while you are driving, especially if you maintain your vehicle's tires properly. If air goes out of a tire, it is much more likely to leak out slowly. But if you should ever have a blowout, here are a few tips about what to expect and what to do:

If a front tire fails, the flat tire will create a drag that pulls the vehicle toward that side. Take your foot off the accelerator pedal and grip the steering wheel firmly. Steer to maintain lane position, and then gently brake to a stop well out of the traffic lane.

A rear blowout, particularly on a curve, acts much like a skid and may require the same correction you would use in a skid. In any rear blowout remove your foot from the accelerator pedal. Get the vehicle under control by steering the way you want the vehicle to go. It may be very bumpy and noisy, but you can still steer. Gently brake to a stop, well off the road if possible.

⚠ CAUTION:

Lifting a vehicle and getting under it to do maintenance or repairs is dangerous without the appropriate safety equipment and training. The jack provided with your vehicle is designed only for changing a flat tire. If it is used for anything else, you or others could be badly injured or killed if the vehicle slips off the jack. Use the jack provided with your vehicle only for changing a flat tire.

If a tire goes flat, the next part shows how to use the jacking equipment to change a flat tire safely.

Downloaded from www.Manualslib.com manuals search engine

Changing a Flat Tire

If a tire goes flat, avoid further tire and wheel damage by driving slowly to a level place. Turn on your hazard warning flashers.

⚠ CAUTION:

Changing a tire can be dangerous. The vehicle can slip off the jack and roll over or fall on you or other people. You and they could be badly injured or even killed. Find a level place to change your tire. To help prevent the vehicle from moving:

1. **Set the parking brake firmly.**
2. **Put an automatic transaxle shift lever in PARK (P), or shift a manual transaxle to FIRST (1) or REVERSE (R).**
3. **Turn off the engine and do not restart while the vehicle is raised.**
4. **Do not allow passengers to remain in the vehicle.**

CAUTION: (Continued)

CAUTION: (Continued)

To be even more certain the vehicle will not move, you should put blocks at the front and rear of the tire farthest away from the one being changed. That would be the tire on the other side, at the opposite end of the vehicle.

When you have a flat tire, use the following example as a guide to assist you in the placement of wheel blocks.

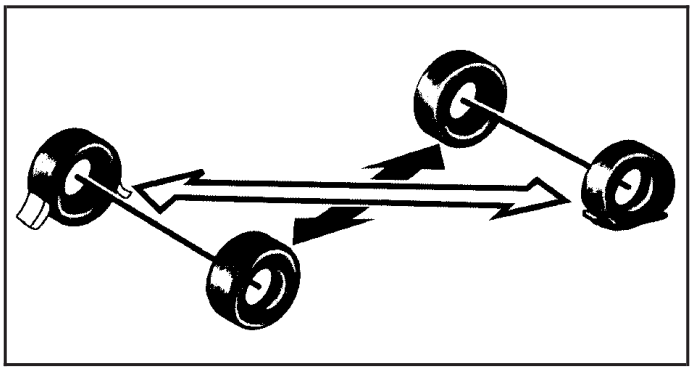

The following information will tell you how to use the jack and change a tire.

Downloaded from www.Manualslib.com manuals search engine

Removing the Spare Tire and Tools

The jack, wheel wrench, jack handle and spare tire are stowed in the rear of the vehicle, underneath the floor of the cargo area. To remove the spare tire and tools do the following:

1. Turn the two lock knobs on the floor of the cargo area to UNLOCK.

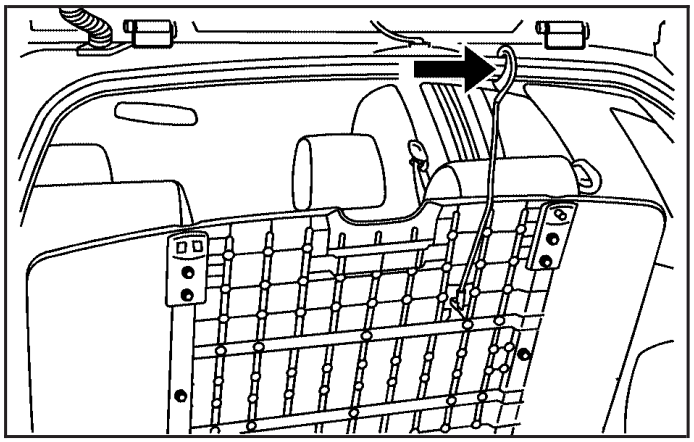

2. Lift up the cargo area floor panel, remove the hook attached to the bottom side of the panel and hook it over the weatherstripping.

Notice: **If you do not put the hook in the proper location, you could damage your vehicle. Always put the hook in the proper location in order to avoid damaging the vehicle.**

3. Remove the jack from the tray on the right side of the compartment and the jack handle and wheel wrench from the top side of the compartment.

Downloaded from www.Manualslib.com manuals search engine

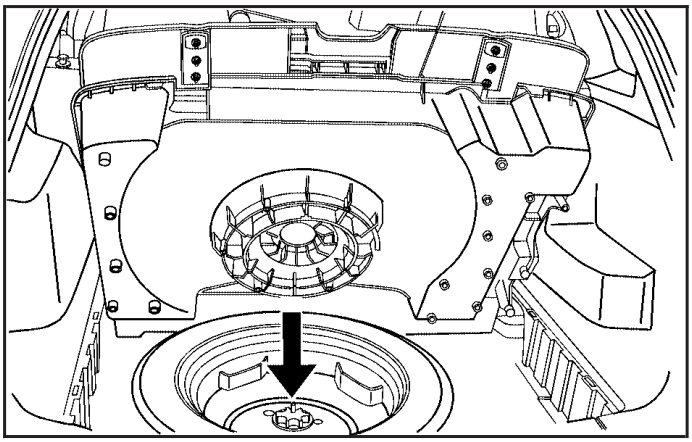

4. Remove the center retaining nut and lift up the plastic tray to expose the compact spare tire.
5. Remove the center bolt from the compact spare tire and pull out the compact spare tire. See *Compact Spare Tire on page 354*

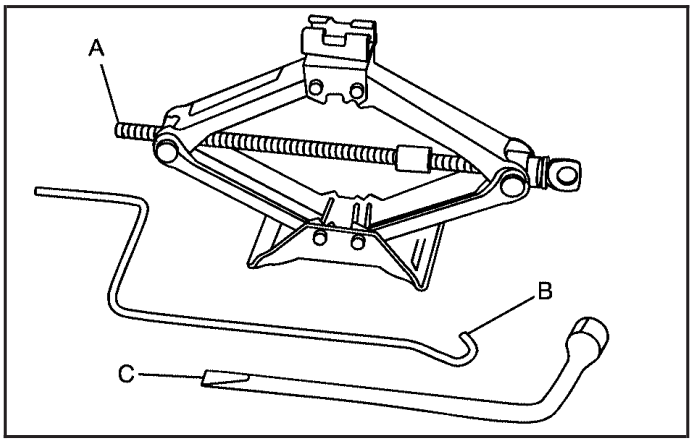

The tools you will be using include the jack (A), jack handle (B) and wheel wrench (C).

Downloaded from www.Manualslib.com manuals search engine

Removing the Flat Tire and Installing the Spare Tire

1. Attach the jack handle to the jack.
2. Turn the jack handle clockwise to raise the lift head a little.

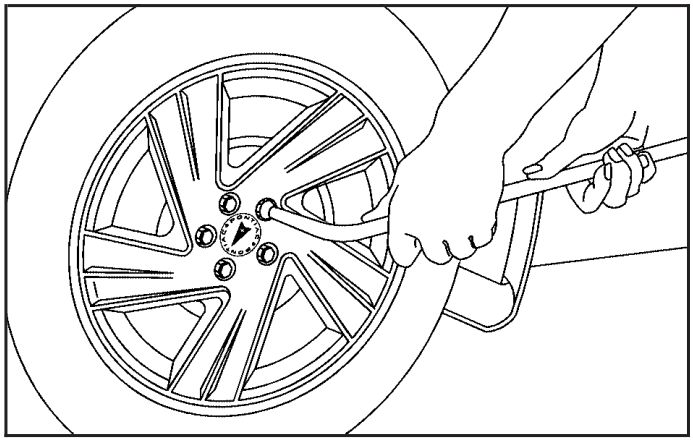

3. Using the wheel wrench, loosen all the wheel nuts. Do not remove them yet.

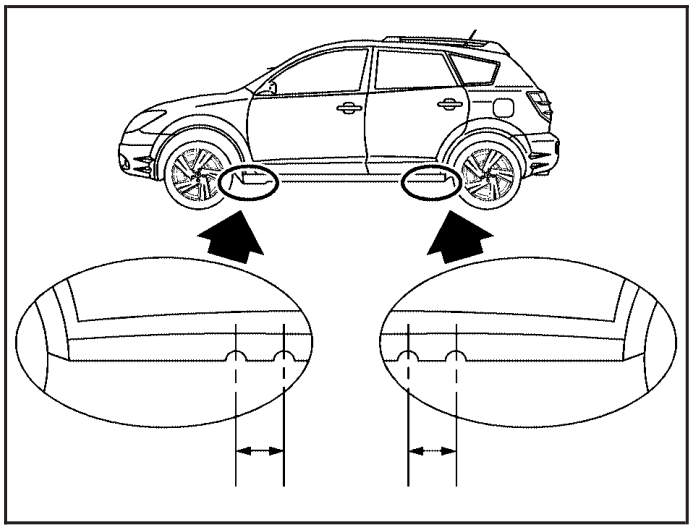

4. Position the jack and raise the jack lift head to fit over the car flange between the two notches.

Downloaded from www.Manualslib.com manuals search engine

⚠ CAUTION:

Getting under a vehicle when it is jacked up is dangerous. If the vehicle slips off the jack you could be badly injured or killed. Never get under a vehicle when it is supported only by a jack.

⚠ CAUTION:

Raising your vehicle with the jack improperly positioned can damage the vehicle and even make the vehicle fall. To help avoid personal injury and vehicle damage, be sure to fit the jack lift head into the proper location before raising the vehicle.

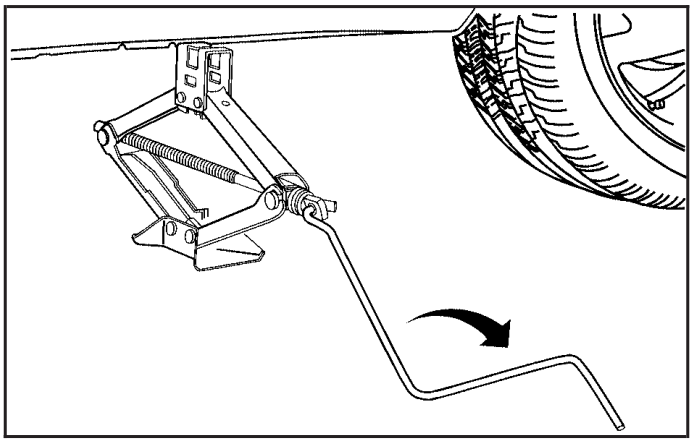

5. Raise the vehicle by turning the jack handle clockwise. Raise the vehicle far enough off the ground so there is enough room for the compact spare tire to fit underneath the wheel well.

Downloaded from www.Manualslib.com manuals search engine

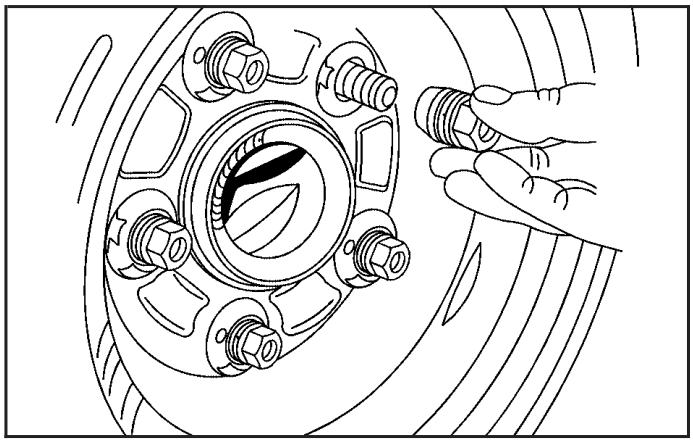

6. Remove all the wheel nuts and take off the flat tire.
7. Install the spare tire.

⚠ CAUTION:

Rust or dirt on the wheel, or on the parts to which it is fastened, can make the wheel nuts become loose after time. The wheel could come off and cause an accident. When you change a wheel, remove any rust or dirt from the places where the wheel attaches to the vehicle. In an emergency, you can use a cloth or a paper towel to do this; but be sure to use a scraper or wire brush later, if needed, to get all the rust or dirt off.

Downloaded from www.Manualslib.com manuals search engine

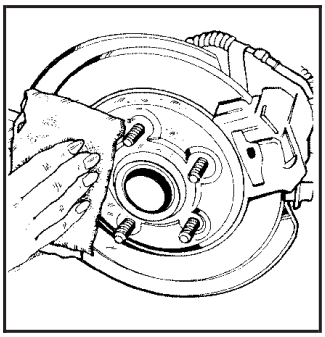

8. Remove any rust or dirt from the wheel bolts, mounting surfaces and spare wheel.

9. Place the compact spare tire on the wheel-mounting surface.

⚠ CAUTION:

Never use oil or grease on studs or nuts. If you do, the nuts might come loose. Your wheel could fall off, causing a serious accident.

Downloaded from www.Manualslib.com manuals search engine

10. Reinstall the wheel nuts with the rounded end of the nuts toward the wheel. Tighten each nut by hand until the wheel is held against the hub.

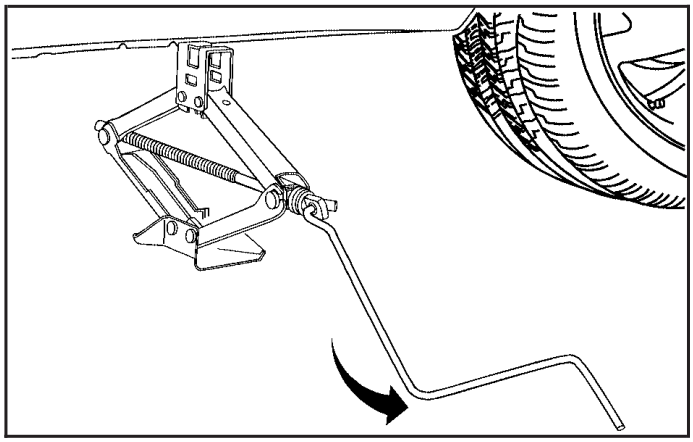

11. Lower the vehicle by turning the jack handle counterclockwise. Lower the jack completely.

⚠ CAUTION:

Incorrect wheel nuts or improperly tightened wheel nuts can cause the wheel to come loose and even come off. This could lead to an accident. Be sure to use the correct wheel nuts. If you have to replace them, be sure to get new GM original equipment wheel nuts. Stop somewhere as soon as you can and have the nuts tightened with a torque wrench to the proper torque specification. See *Capacities and Specifications on page 369* for wheel nut torque specification.

Downloaded from www.Manualslib.com manuals search engine

Notice: **Improperly tightened wheel nuts can lead to brake pulsation and rotor damage. To avoid expensive brake repairs, evenly tighten the wheel nuts in the proper sequence and to the proper torque specification. See *Capacities and Specifications on page 369* for the wheel nut torque specification.**

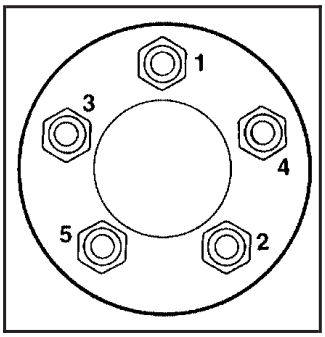

12. Tighten the wheel nuts firmly in a crisscross sequence as shown.

Storing a Flat or Spare Tire and Tools

⚠ CAUTION:

Storing a jack, a tire, or other equipment in the passenger compartment of the vehicle could cause injury. In a sudden stop or collision, loose equipment could strike someone. Store all these in the proper place.

The compact spare tire storage area is designed only for the compact spare tire, the standard tire cannot be stored there.

To store the flat tire, do the following:

1. Remove the center wheel cap before storing the flat tire, if your vehicle has aluminum wheels.
2. Place the flat tire on the rear cargo area floor panel with the outer side of the wheel facing up.

Downloaded from www.Manualslib.com manuals search engine

3. Use the tire tie-down straps located under the floor panel to secure the flat tire.

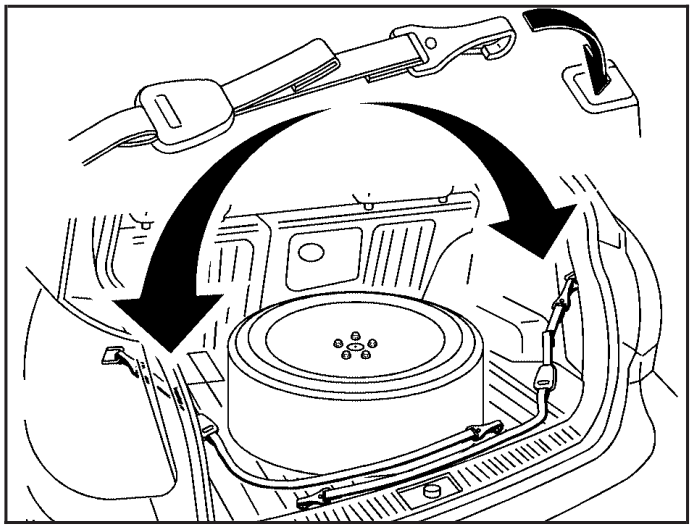

4. Hook the straps (end closest to the buckle) to the rear, upper tie-down hooks.

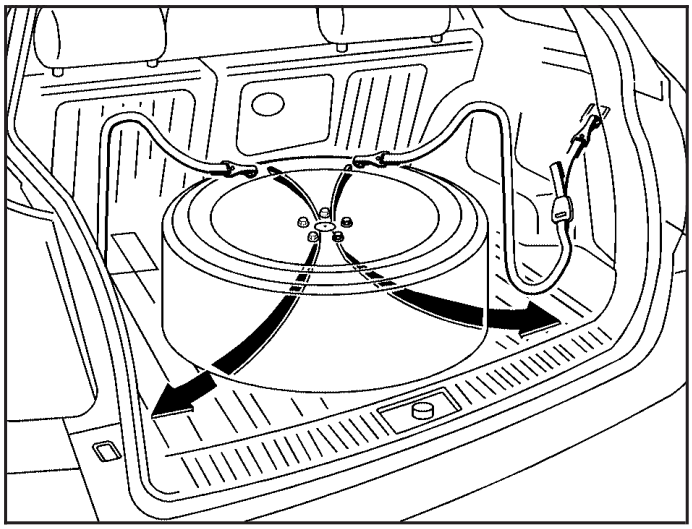

5. Pass the straps through the center hole of the wheel.
6. Attach the other end of the straps to the rear, lower tie-down hooks.

Downloaded from www.Manualslib.com manuals search engine

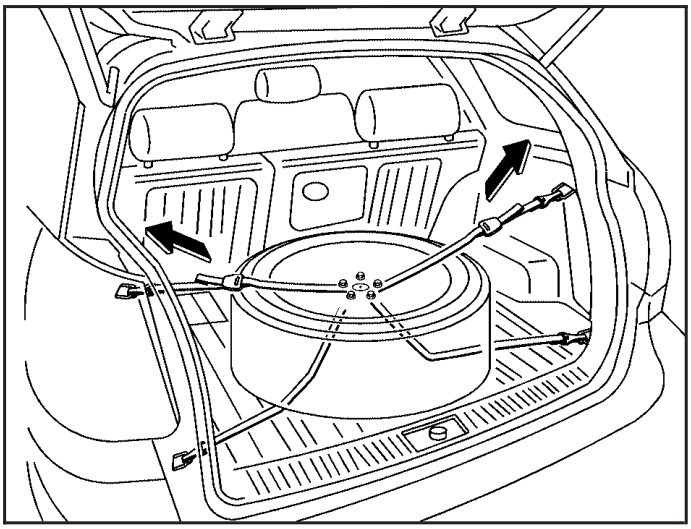

7. Position the tire edge against the rear center end of the floor panel. Pull the end of the straps to make sure the tire is secure.

Use the following diagram as a guide for storing the compact spare tire once you are done using it.

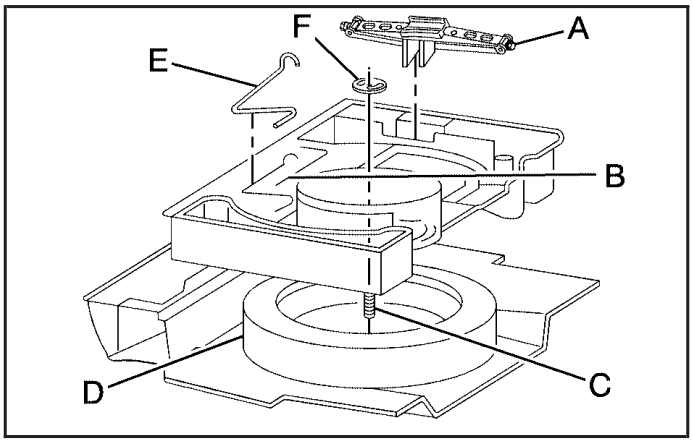

A. Jack
B. Wheel Wrench
C. Bolt
D. Spare Tire
E. Jack Handle
F. Nut

Return the jack (A), jack handle (E), wheel wrench (B) and compact spare tire to the storage area. When storing the compact spare tire, put it in place with the inner side of the wheel facing up.

Downloaded from www.Manualslib.com manuals search engine

Compact Spare Tire

Although the compact spare tire was fully inflated when your vehicle was new, it can lose air after a time. Check the inflation pressure regularly. It should be 60 psi (420 kPa).

After installing the compact spare on your vehicle, you should stop as soon as possible and make sure your spare tire is correctly inflated. The compact spare is made to perform well at speeds up to 50 mph (80 km/h), so you can finish your trip and have your full-size tire repaired or replaced where you want. Of course, it is best to replace your spare with a full-size tire as soon as you can. Your spare will last longer and be in good shape in case you need it again.

Notice: **When the compact spare is installed, do not take your vehicle through an automatic car wash with guide rails. The compact spare can get caught on the rails. That can damage the tire and wheel, and maybe other parts of your vehicle.**

Do not use your compact spare on other vehicles.

And do not mix your compact spare tire or wheel with other wheels or tires. They will not fit. Keep your spare tire and its wheel together.

Notice: **Tire chains will not fit your compact spare. Using them can damage your vehicle and can damage the chains too. Do not use tire chains on your compact spare.**

Appearance Care

Cleaning the Inside of Your Vehicle

Your vehicle's interior will continue to look its best if it is cleaned often. Although not always visible, dust and dirt can accumulate on your upholstery. Dirt can damage carpet, fabric, leather, and plastic surfaces. Regular vacuuming is recommended to remove particles from your upholstery. It is important to keep your upholstery from becoming and remaining heavily soiled. Soils should be removed as quickly as possible. Your vehicle's interior may experience extremes of heat that could cause stains to set rapidly.

Lighter colored interiors may require more frequent cleaning. Use care because newspapers and garments that transfer color to your home furnishings may also transfer color to your vehicle's interior.

Downloaded from www.Manualslib.com manuals search engine

When cleaning your vehicle's interior, only use cleaners specifically designed for the surfaces being cleaned. Permanent damage may result from using cleaners on surfaces for which they were not intended. Use glass cleaner only on glass. Remove any accidental over-spray from other surfaces immediately. To prevent over-spray, apply cleaner directly to the cleaning cloth.

Notice: **If you use abrasive cleaners when cleaning glass surfaces on your vehicle, you could scratch the glass and/or cause damage to the rear window defogger. When cleaning the glass on your vehicle, use only a soft cloth and glass cleaner.**

Many cleaners contain solvents that may become concentrated in your vehicle's breathing space. Before using cleaners, read and adhere to all safety instructions on the label. While cleaning your vehicle's interior, maintain adequate ventilation by opening your vehicle's doors and windows.

Dust may be removed from small buttons and knobs using a small brush with soft bristles.

Your dealer has a product for cleaning your vehicle's glass. Should it become necessary, you can also obtain a product from your dealer to remove odors from your vehicle's upholstery.

Do not clean your vehicle using the following cleaners or techniques:

- Never use a knife or any other sharp object to remove a soil from any interior surface.
- Never use a stiff brush. It can cause damage to your vehicle's interior surfaces.
- Never apply heavy pressure or rub aggressively with a cleaning cloth. Use of heavy pressure can damage your interior and does not improve the effectiveness of soil removal.
- Use only mild, neutral-pH soaps. Avoid laundry detergents or dishwashing soaps with degreasers. Using too much soap will leave a residue that leaves streaks and attracts dirt. For liquid cleaners, about 20 drops per gallon (3.78 L) of water is a good guide.
- Do not heavily saturate your upholstery while cleaning.
- Damage to your vehicle's interior may result from the use of many organic solvents such as naptha, alcohol, etc.

Downloaded from www.Manualslib.com manuals search engine

Fabric/Carpet

Use a vacuum cleaner with a soft brush attachment frequently to remove dust and loose dirt. A canister vacuum with a beater bar in the nozzle may only be used on floor carpet and carpeted floor mats. For soils, always try to remove them first with plain water or club soda. Before cleaning, gently remove as much of the soil as possible using one of the following techniques:

- For liquids: gently blot the remaining soil with a paper towel. Allow the soil to absorb into the paper towel until no more can be removed.
- For solid dry soils: remove as much as possible and then vacuum.

To clean, use the following instructions:

1. Saturate a lint-free, clean white cloth with water or club soda.
2. Wring the cloth to remove excess moisture.
3. Start on the outside edge of the soil and gently rub toward the center. Continue cleaning, using a clean area of the cloth each time it becomes soiled.
4. Continue to gently rub the soiled area until the cleaning cloth remains clean.
5. If the soil is not completely removed, use a mild soap solution and repeat the cleaning process that was used with plain water.

If any of the soil remains, a commercial fabric cleaner or spot lifter may be necessary. When a commercial upholstery cleaner or spot lifter is to be used, test a small hidden area for colorfastness first. If the locally cleaned area gives any impression that a ring formation may result, clean the entire surface.

After the cleaning process has been completed, a paper towel can be used to blot excess moisture from the fabric or carpet.

Leather

A soft cloth dampened with water may be used to remove dust. If a more thorough cleaning is necessary, a soft cloth dampened with a mild soap solution can be used. Allow the leather to dry naturally. Do not use heat to dry. Never use steam to clean leather. Never use spot lifters or spot removers on leather. Many commercial leather cleaners and coatings that are sold to preserve and protect leather may permanently change the appearance and feel of your leather and are

Downloaded from www.Manualslib.com manuals search engine

not recommended. Do not use silicone or wax-based products, or those containing organic solvents to clean your vehicle's interior because they can alter the appearance by increasing the gloss in a non-uniform manner. Never use shoe polish on your leather.

Instrument Panel, Vinyl, and Other Plastic Surfaces

A soft cloth dampened with water may be used to remove dust. If a more thorough cleaning is necessary, a clean soft cloth dampened with a mild soap solution can be used to gently remove dust and dirt. Never use spot lifters or removers on plastic surfaces. Many commercial cleaners and coatings that are sold to preserve and protect soft plastic surfaces may permanently change the appearance and feel of your interior and are not recommended. Do not use silicone or wax-based products, or those containing organic solvents to clean your vehicle's interior because they can alter the appearance by increasing the gloss in a non-uniform manner.

Some commercial products may increase gloss on your instrument panel. The increase in gloss may cause annoying reflections in the windshield and even make it difficult to see through the windshield under certain conditions.

Care of Safety Belts

Keep belts clean and dry.

⚠ CAUTION:

Do not bleach or dye safety belts. If you do, it may severely weaken them. In a crash, they might not be able to provide adequate protection. Clean safety belts only with mild soap and lukewarm water.

Downloaded from www.Manualslib.com manuals search engine

Weatherstrips

Silicone grease on weatherstrips will make them last longer, seal better, and not stick or squeak. Apply silicone grease with a clean cloth. During very cold, damp weather frequent application may be required.

Washing Your Vehicle

The paint finish on the vehicle provides beauty, depth of color, gloss retention, and durability.

The best way to preserve the vehicle's finish is to keep it clean by washing it often with lukewarm or cold water.

Do not wash the vehicle in the direct rays of the sun. Use a car washing soap. Do not use strong soaps or chemical detergents. Be sure to rinse the vehicle well, removing all soap residue completely. Approved cleaning products can be obtained from your dealer. See *Vehicle Care/Appearance Materials on page 362*. Do not use cleaning agents that are petroleum based, or that contain acid or abrasives. All cleaning agents should be flushed promptly and not allowed to dry on the surface, or they could stain.

Dry the finish with a soft, clean chamois or an all-cotton towel to avoid surface scratches and water spotting.

High pressure car washes may cause water to enter the vehicle.

Cleaning Exterior Lamps/Lenses

Use only lukewarm or cold water, a soft cloth and a car washing soap to clean exterior lamps and lenses. Follow instructions under *Washing Your Vehicle on page 358*.

Finish Care

Occasional waxing or mild polishing of the vehicle by hand may be necessary to remove residue from the paint finish. Approved cleaning products can be obtained from your dealer. See *Vehicle Care/Appearance Materials on page 362*.

Notice: **Machine compounding or aggressive polishing on a basecoat/clearcoat paint finish may damage it. Use only non-abrasive waxes and polishes that are made for a basecoat/clearcoat paint finish on your vehicle.**

Downloaded from www.Manualslib.com manuals search engine

The vehicle has a basecoat/clearcoat paint finish. The clearcoat gives more depth and gloss to the colored basecoat. Always use waxes and polishes that are non-abrasive and made for a basecoat/clearcoat paint finish.

Foreign materials such as calcium chloride and other salts, ice melting agents, road oil and tar, tree sap, bird droppings, chemicals from industrial chimneys, etc., can damage the vehicle's finish if they remain on painted surfaces. Wash the vehicle as soon as possible. If necessary, use non-abrasive cleaners that are marked safe for painted surfaces to remove foreign matter.

Exterior painted surfaces are subject to aging, weather, and chemical fallout that can take their toll over a period of years. To help keep the paint finish looking new, keep the vehicle in a garage or covered whenever possible.

Windshield, Backglass, and Wiper Blades

If the windshield is not clear after using the windshield washer, or if the wiper blade chatters when running, wax, sap or other material may be on the blade or windshield.

Clean the outside of the windshield with a full-strength glass cleaning liquid. The windshield is clean if beads do not form when you rinse it with water.

Grime from the windshield will stick to the wiper blades and affect their performance. Clean the blade by wiping vigorously with a cloth soaked in full-strength windshield washer solvent. Then rinse the blade with water.

Check the wiper blades and clean them as necessary; replace blades that look worn.

Aluminum Wheels

Notice: **If you use strong soaps, chemicals, abrasive polishes, cleaners, brushes, or cleaners that contain acid on aluminum or chrome-plated wheels, you could damage the surface of the wheel(s). The repairs would not be covered by your warranty. Use only GM-approved cleaners on aluminum or chrome-plated wheels.**

Keep the wheels clean using a soft clean cloth with mild soap and water. Rinse with clean water. After rinsing thoroughly, dry with a soft clean towel. A wax may then be applied.

Downloaded from www.Manualslib.com manuals search engine

Notice: **Using chrome polish on aluminum wheels could damage the wheels. The repairs would not be covered by your warranty. Use chrome polish on chrome wheels only.**

The surface of these wheels is similar to the painted surface of the vehicle. Do not use strong soaps, chemicals, abrasive polishes, abrasive cleaners, cleaners with acid, or abrasive cleaning brushes on them because the surface could be damaged. Do not use chrome polish on aluminum wheels.

Notice: **If you drive your vehicle through an automatic car wash that has silicone carbide tire cleaning brushes, you could damage the aluminum or chrome-plated wheels. The repairs would not be covered by your warranty. Never drive a vehicle equipped with aluminum or chrome-plated wheels through an automatic car wash that uses silicone carbide tire cleaning brushes.**

Do not take the vehicle through an automatic car wash that has silicone carbide tire cleaning brushes. These brushes can also damage the surface of these wheels.

Tires

To clean the tires, use a stiff brush with tire cleaner.

Notice: **Using petroleum-based tire dressing products on your vehicle may damage the paint finish and/or tires. When applying a tire dressing, always wipe off any overspray from all painted surfaces on your vehicle.**

Sheet Metal Damage

If the vehicle is damaged and requires sheet metal repair or replacement, make sure the body repair shop applies anti-corrosion material to parts repaired or replaced to restore corrosion protection.

Original manufacturer replacement parts will provide the corrosion protection while maintaining the warranty.

Downloaded from www.Manualslib.com manuals search engine

Finish Damage

Any stone chips, fractures or deep scratches in the finish should be repaired right away. Bare metal will corrode quickly and may develop into major repair expense.

Minor chips and scratches can be repaired with touch-up materials available from your dealer. Larger areas of finish damage can be corrected in your dealer's body and paint shop.

Underbody Maintenance

Chemicals used for ice and snow removal and dust control can collect on the underbody. If these are not removed, corrosion and rust can develop on the underbody parts such as fuel lines, frame, floor pan, and exhaust system even though they have corrosion protection.

At least every spring, flush these materials from the underbody with plain water. Clean any areas where mud and debris can collect. Dirt packed in close areas of the frame should be loosened before being flushed. Your dealer or an underbody car washing system can do this for you.

Chemical Paint Spotting

Some weather and atmospheric conditions can create a chemical fallout. Airborne pollutants can fall upon and attack painted surfaces on the vehicle. This damage can take two forms: blotchy, ring-shaped discolorations, and small, irregular dark spots etched into the paint surface.

Although no defect in the paint job causes this, GM will repair, at no charge to the owner, the surfaces of new vehicles damaged by this fallout condition within 12 months or 12,000 miles (20 000 km) of purchase, whichever occurs first.

Downloaded from www.Manualslib.com manuals search engine

Vehicle Care/Appearance Materials

Description	Usage
Polishing Cloth Wax-Treated	Interior and exterior polishing cloth.
Tar and Road Oil Remover	Removes tar, road oil and asphalt.
Chrome Cleaner and Polish	Use on chrome or stainless steel.
White Sidewall Tire Cleaner	Removes soil and black marks from whitewalls.
Vinyl Cleaner	Cleans vinyl.
Glass Cleaner	Removes dirt, grime, smoke and fingerprints.
Chrome and Wire Wheel Cleaner	Removes dirt and grime from chrome wheels and wire wheel covers.
Finish Enhancer	Removes dust, fingerprints, and surface contaminants. Spray on wipe off.

Description	Usage
Swirl Remover Polish	Removes swirl marks, fine scratches and other light surface contamination.
Cleaner Wax	Removes light scratches and protects finish.
Foaming Tire Shine Low Gloss	Cleans, shines and protects in one easy step, no wiping necessary.
Wash Wax Concentrate	Medium foaming shampoo. Cleans and lightly waxes. Biodegradable and phosphate free.
Spot Lifter	Quickly and easily removes spots and stains from carpets, vinyl and cloth upholstery.
Odor Eliminator	Odorless spray odor eliminator used on fabrics, vinyl, leather and carpet.

Downloaded from www.Manualslib.com manuals search engine

Vehicle Identification

Vehicle Identification Number (VIN)

SAMPLE4UX1M072675

This is the legal identifier for your vehicle. It appears on a plate in the front corner of the instrument panel, on the driver side. You can see it if you look through the windshield from outside your vehicle. The VIN also appears on the Vehicle Certification and Service Parts labels and the certificates of title and registration.

Engine Identification

The eighth character in the VIN is the engine code. This code helps you identify your vehicle's engine, specifications, and replacement parts.

Service Parts Identification Label

This label is on the inside of the glove box. It is very helpful if you ever need to order parts. The label has the following information:

- Vehicle Identification Number (VIN)
- Model designation
- Paint information
- Production options and special equipment

Do not remove this label from the vehicle.

Downloaded from www.Manualslib.com manuals search engine

Electrical System

Add-On Electrical Equipment

Notice: **Do not add anything electrical to your vehicle unless you check with your dealer first. Some electrical equipment can damage your vehicle and the damage would not be covered by your warranty. Some add-on electrical equipment can keep other components from working as they should.**

Add-on equipment can drain your vehicle's battery, even if your vehicle is not operating.

Your vehicle has an airbag system. Before attempting to add anything electrical to your vehicle, see *Servicing Your Airbag-Equipped Vehicle on page 80*.

Headlamp Wiring

The headlamp wiring is protected by a circuit breaker. An electrical overload will cause the lamps to go on and off, or in some cases to remain off. If this happens, have your headlamp wiring checked right away.

Windshield Wiper Fuses

The windshield wiper motor is protected by a circuit breaker and a fuse. If the motor overheats due to heavy snow or ice, the wiper will stop until the motor cools. If the overload is caused by some electrical problem, and not snow or ice, be sure to get it fixed.

Power Windows and Other Power Options

Circuit breakers protect the power windows and other power accessories. When the current load is too heavy, the circuit breaker opens and closes, protecting the circuit until the problem is fixed or goes away.

Downloaded from www.Manualslib.com manuals search engine

Fuses and Circuit Breakers

The wiring circuits in your vehicle are protected from short circuits by fuses, circuit breakers and fusible thermal links in the wiring itself. This greatly reduces the chance of fires caused by electrical problems.

Look at the silver-colored band inside the fuse. If the band is broken or melted, replace the fuse. Be sure you replace a bad fuse with a new one of the correct size.

If you ever have a problem on the road and don't have a spare fuse, you can borrow one. Just pick some feature of your vehicle that you can get along without – like the radio or air conditioner – and use its fuse, if it is of the value you need. Replace it as soon as you can.

Before replacing a fuse, turn every electrical switch off.

Instrument Panel Fuse Block

The fuse block is located underneath the instrument panel on the driver's side of the vehicle.

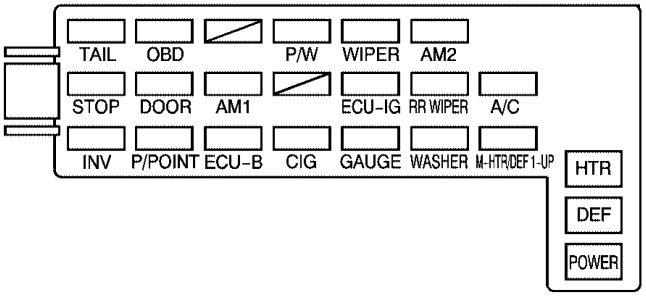

Fuses	Usage
TAIL	Front Parking Lamps, Taillamps, License Plate Lamps, Instrument Panel Lights, Engine Control System
OBD	On-Board Diagnostic System

Downloaded from www.Manualslib.com manuals search engine

Fuses	Usage
Empty	Not Used
P/W	Power Windows
WIPER	Windshield Wipers
AM2	Charging System, Air Bag System, Starter System, Engine Control
STOP	Stop Lamps, CHMSL, Engine Control System, Anti-lock Brakes, Cruise Control
DOOR	Power Door Locks, Liftglass Lock
AM1	Cigarette Lighter, Gauge, ECU-IG, Wiper, Rear Wiper, Washer Fuses
Empty	Not Used
ECU-IG	Cruise Control, Anti-lock Brakes, Theft Deterrent System, Automatic Transaxle Control System, Electric Cooling Fan
RR WIPER	Rear Window Wiper, Rear Window Defogger
A/C	Air Conditioning

Fuses	Usage
INV	Power Outlets
P/POINT	Power Outlets
ECU-B	Daytime Running Lamps
CIG	Cigarette Lighter, Power Rearview Mirrors, Power Outlets, Audio System, Automatic Transaxle Control System
GAUGE	Gauges and Meters, Back-Up Lamps, Charging System, Power Door Locks, Power Windows, Sunroof, Air Conditioning, Cruise Control
WASHER	Windshield Washers
M-HTR/DEF 1–UP	Engine Control System
HTR	Air Conditioning System
DEF	Rear Window Defogger, M-HTR/DEF 1–UP Fuse
POWER	Power Windows, Electric Moon Roof

Downloaded from www.Manualslib.com manuals search engine

Engine Compartment Fuse Block

This engine compartment fuse block is located in the engine compartment on the driver's side of the vehicle near the air cleaner. See *Engine Compartment Overview on page 282* for more information on location.

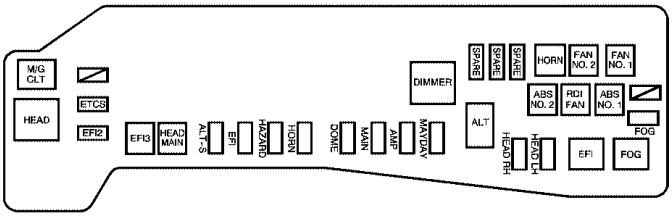

Fuses	Usage
Empty	Not Used
SPARE	Spare Fuse
SPARE	Spare Fuse
SPARE	Spare Fuse
ETCS	Electronic Throttle Control System

Fuses	Usage
ABS NO. 2	Anti-lock Brake System (Without Stability Control System)
RDI FAN	Electric Cooling Fan
ABS NO. 1	Anti-lock Brake System (With Stability Control System)
FOG	Front Fog Lamps
EFI2	Multiport Fuel Injection System/ Sequential Multiport Fuel Injection System, Emission Control System
EFI3	Multiport Fuel Injection System/ Sequential Multiport Fuel Injection System, Emission Control System
HEAD MAIN	Right Headlamp, Left Headlamp Fuses
ALT-S	Charging System
EFI	Electronic Fuel Injection System
HAZARD	Turn Signal Lamps, Emergency Flasher
HORN	Horn
DOME	Interior Lights, Gauges and Meters, Audio System, Remote Keyless Entry System, Navigation System (If Equipped)
MAIN	Starter System, AM2 Fuse
AMP	Audio System

Downloaded from www.Manualslib.com manuals search engine

Fuses	Usage
MAYDAY	OnStar® System
ALT	ABS NO.1, ABS NO.2, RDI FAN, FOG, Heater, AM1, POWER, DOOR, ECU-B, TAIL, STOP, P/POINT, INV, OBD Fuses, Charging System
HEAD RH	Right-hand Headlamp, Headlamp High Beam Indicator Lamp
HEAD LH	Left-hand Headlamp

Relays	Usage
M/G	M/G
HEAD	Headlamps
DIMMER	Headlamp Dimmer
HORN	Horn
FAN NO. 2	Cooling Fan System
FAN NO. 1	Cooling Fan System
EFI	Electronic Fuel Injection System
FOG	Fog Lamps

Downloaded from www.Manualslib.com manuals search engine

Capacities and Specifications

The following approximate capacities are given in English and metric conversions.

Application	Capacities	
	English	Metric
Air Conditioning Refrigerant R134a	For the air conditioning system refrigerant charge amount, see the refrigerant caution label located under the hood. See your dealer for more information.	
Cooling System	6.9 qt	6.5 L
Engine Oil with Filter	4.4 qt	4.2 L
Fuel Tank	13.2 gal	50.0 L
Transaxle Fluid		
Automatic Transaxle	3.2 qt	3.0 L
Manual Transaxle	2.0 qt	1.9 L
Wheel Nut Torque	76 lb ft	103 N•m
All capacities are approximate. When adding, be sure to fill to the approximate level, as recommended in this manual. See *Part D: Recommended Fluids and Lubricants on page 394*.		

Engine Specifications

Engine	VIN Code	Transaxle	Spark Plug Gap
1.8L L4	8	Automatic and Manual	0.043 inches (1.1 mm)

Downloaded from www.Manualslib.com manuals search engine

Normal Maintenance Replacement Parts

Replacement parts identified below by name, part number, or specification can be obtained from your GM dealer.

Part	GM Part Numbers	Other Part Numbers
Battery	19001602	35–6YR
Engine Air Cleaner/Filter	88969107	A2036C
Engine Oil Filter	88971573	PF1233
Passenger Compartment Air Filter	88970273	CF134
PCV Valve	88974190	—
Spark Plugs*	94859446	SK16R11†, IFR5A11††
*Your engine is fitted with iridium-tipped spark plugs. Use only iridium-tipped spark plugs for better engine performance. † DENSO †† NGK		

Downloaded from www.Manualslib.com manuals search engine

Engine Drive Belt Routing

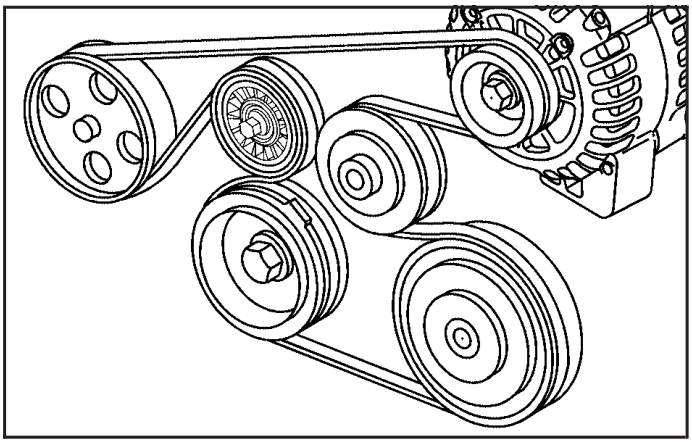

Downloaded from www.Manualslib.com manuals search engine

NOTES

Downloaded from www.Manualslib.com manuals search engine

Section 6 Maintenance Schedule

Maintenance Schedule 374
Introduction 374
Maintenance Requirements 374
Your Vehicle and the Environment 374
How This Section is Organized 374
Part A: Scheduled Maintenance Services 376
Using the Maintenance Schedule 376
Scheduled Maintenance 377
Part B: Owner Checks and Services 386
At Each Fuel Fill 386
At Least Once a Month 386
At Least Twice a Year 387
At Least Once a Year 388
Part C: Periodic Maintenance Inspections 392
Steering, Suspension and Front Drive Axle Boot and Seal Inspection 392
Exhaust System Inspection 392
Fuel System Inspection 392
Engine Cooling System Inspection 393
Throttle System Inspection 393
Brake System Inspection 393
Part D: Recommended Fluids and Lubricants 394
Part E: Maintenance Record 396

Downloaded from www.Manualslib.com manuals search engine

Maintenance Schedule

Introduction

Important: Keep engine oil at the proper level and change as recommended.

Have you purchased the GM Protection Plan? The Plan supplements your new vehicle warranties. See your Warranty and Owner Assistance booklet or your dealer for details.

Maintenance Requirements

Maintenance intervals, checks, inspections and recommended fluids and lubricants as prescribed in this manual are necessary to keep your vehicle in good working condition. Any damage caused by failure to follow scheduled maintenance may not be covered by warranty.

Your Vehicle and the Environment

Proper vehicle maintenance not only helps to keep your vehicle in good working condition, but also helps the environment. Improper vehicle maintenance can even affect the quality of the air we breathe. Improper fluid levels or the wrong tire inflation can increase the level of emissions from your vehicle. To help protect our environment, and to keep your vehicle in good condition, be sure to maintain your vehicle properly.

How This Section is Organized

This maintenance schedule is divided into five parts:

"Part A: Scheduled Maintenance Services" explains what to have done and how often. Some of these services can be complex, so unless you are technically qualified and have the necessary equipment, you should let your GM dealer's service department do these jobs.

Your GM dealer has GM-trained and supported service people that will perform the work using genuine GM parts.

Downloaded from www.Manualslib.com manuals search engine

⚠ CAUTION:

Performing maintenance work on a vehicle can be dangerous. In trying to do some jobs, you can be seriously injured. Do your own maintenance work only if you have the required know-how and the proper tools and equipment for the job. If you have any doubt, have a qualified technician do the work. See *Doing Your Own Service Work on page 273*.

If you want to purchase service information, see *Service Publications Ordering Information on page 417*.

"Part B: Owner Checks and Services" tells you what should be checked and when. It also explains what you can easily do to help keep your vehicle in good condition.

"Part C: Periodic Maintenance Inspections" explains important inspections that your dealer's service department can perform for you.

"Part D: Recommended Fluids and Lubricants" lists some recommended products necessary to help keep your vehicle properly maintained. These products, or their equivalents, should be used whether you do the work yourself or have it done.

"Part E: Maintenance Record" is a place for you to record and keep track of the maintenance performed on your vehicle. Keep your maintenance receipts. They may be needed to qualify your vehicle for warranty repairs.

Downloaded from www.Manualslib.com manuals search engine

Part A: Scheduled Maintenance Services

In this part are scheduled maintenance services which are to be performed at the mileage intervals specified.

Using the Maintenance Schedule

We at General Motors want to keep your vehicle in good working condition. But we do not know exactly how you will drive it. You may drive short distances only a few times a week. Or you may drive long distances all the time in very hot, dusty weather. You may use your vehicle in making deliveries. Or you may drive it to work, to do errands, or in many other ways.

Because of the different ways people use their vehicles, maintenance needs may vary. You may need more frequent checks and replacements. So please read the following and note how you drive. If you have questions on how to keep your vehicle in good condition, see your dealer.

This part tells you the maintenance services you should have done and when to schedule them.

When you go to your dealer for your service needs, you will know that GM-trained and supported service people will perform the work using genuine GM parts.

The proper fluids and lubricants to use are listed in Part D. Make sure whoever services your vehicle uses these. All parts should be replaced and all necessary repairs done before you or anyone else drives the vehicle.

This schedule is for vehicles that:

- carry passengers and cargo within recommended limits. You will find these on the Tire and Loading Information label. See *Loading Your Vehicle on page 253*.
- are driven on reasonable road surfaces within legal driving limits.
- use the recommended fuel. See *Gasoline Octane on page 274*.

Downloaded from www.Manualslib.com manuals search engine

Scheduled Maintenance

The services shown in this schedule up to 120,000 miles (192 000 km) should be repeated after 120,000 miles (192 000 km) at the same intervals for the life of this vehicle.

See *Part B: Owner Checks and Services on page 386*, *Part C: Periodic Maintenance Inspections on page 392*, and *Part D: Recommended Fluids and Lubricants on page 394*.

Footnotes

† *The U.S. Environmental Protection Agency or the California Air Resources Board has determined that the failure to perform this maintenance item will not nullify the emissions warranty or limit recall liability prior to the completion of the vehicle's useful life. We, however, urge that all recommended maintenance services be performed at the indicated intervals and the maintenance be recorded.*

+ *A good time to check your brakes is during tire rotation. See Brake System Inspection on page 393.*

5,000 Miles (8 000 km)

- ❑ Change engine oil and filter (or every 3 months, whichever occurs first). *An Emission Control Service.*
- ❑ Rotate tires. See *Tire Inspection and Rotation on page 333* for proper rotation pattern and additional information. *(See footnote +.)*
- ❑ Inspect engine air cleaner filter if you are driving in dusty conditions. Replace filter if necessary.

10,000 Miles (16 000 km)

- ❑ Change engine oil and filter (or every 3 months, whichever occurs first). *An Emission Control Service.*
- ❑ Rotate tires. See *Tire Inspection and Rotation on page 333* for proper rotation pattern and additional information. *(See footnote +.)*
- ❑ Inspect engine air cleaner filter if you are driving in dusty conditions. Replace filter if necessary.

Downloaded from www.Manualslib.com manuals search engine

15,000 Miles (24 000 km)

- ❑ Change engine oil and filter (or every 3 months, whichever occurs first). *An Emission Control Service.*
- ❑ Rotate tires. See *Tire Inspection and Rotation on page 333* for proper rotation pattern and additional information. *(See footnote +.)*
- ❑ Inspect engine air cleaner filter if you are driving in dusty conditions. Replace filter if necessary.
- ❑ Inspect passenger compartment air filter.

20,000 Miles (32 000 km)

- ❑ Change engine oil and filter (or every 3 months, whichever occurs first). *An Emission Control Service.*
- ❑ Rotate tires. See *Tire Inspection and Rotation on page 333* for proper rotation pattern and additional information. *(See footnote +.)*
- ❑ Inspect engine air cleaner filter if you are driving in dusty conditions. Replace filter if necessary.

25,000 Miles (40 000 km)

- ❑ Change engine oil and filter (or every 3 months, whichever occurs first). *An Emission Control Service.*
- ❑ Rotate tires. See *Tire Inspection and Rotation on page 333* for proper rotation pattern and additional information. *(See footnote +.)*
- ❑ Inspect engine air cleaner filter if you are driving in dusty conditions. Replace filter if necessary.

30,000 Miles (48 000 km)

- ❑ Change engine oil and filter (or every 3 months, whichever occurs first). *An Emission Control Service.*
- ❑ Rotate tires. See *Tire Inspection and Rotation on page 333* for proper rotation pattern and additional information. *(See footnote +.)*
- ❑ Replace engine air cleaner filter (or every 24 months, whichever occurs first). See *Engine Air Cleaner/Filter on page 288* for more information.

Downloaded from www.Manualslib.com manuals search engine

- ❑ Replace passenger compartment air filter.
- ❑ Inspect fuel tank, cap, cap gasket, and lines for damage or leaks (or every 24 months, whichever occurs first). Replace parts as needed. *An Emission Control Service. (See footnote †.)*
- ❑ Change manual transaxle fluid every 30,000 miles (48 000 km) only if your vehicle is used to tow a trailer.

35,000 Miles (56 000 km)

- ❑ Change engine oil and filter (or every 3 months, whichever occurs first). *An Emission Control Service.*
- ❑ Rotate tires. See *Tire Inspection and Rotation on page 333* for proper rotation pattern and additional information. *(See footnote +.)*
- ❑ Inspect engine air cleaner filter if you are driving in dusty conditions. Replace filter if necessary.

40,000 Miles (64 000 km)

- ❑ Change engine oil and filter (or every 3 months, whichever occurs first). *An Emission Control Service.*
- ❑ Rotate tires. See *Tire Inspection and Rotation on page 333* for proper rotation pattern and additional information. *(See footnote +.)*
- ❑ Inspect engine air cleaner filter if you are driving in dusty conditions. Replace filter if necessary.

45,000 Miles (72 000 km)

- ❑ Change engine oil and filter (or every 3 months, whichever occurs first). *An Emission Control Service.*
- ❑ Rotate tires. See *Tire Inspection and Rotation on page 333* for proper rotation pattern and additional information. *(See footnote +.)*
- ❑ Inspect engine air cleaner filter if you are driving in dusty conditions. Replace filter if necessary.
- ❑ Inspect passenger compartment air filter.

Downloaded from www.Manualslib.com manuals search engine

50,000 Miles (80 000 km)

- ❑ Change engine oil and filter (or every 3 months, whichever occurs first). *An Emission Control Service.*
- ❑ Rotate tires. See *Tire Inspection and Rotation on page 333* for proper rotation pattern and additional information. *(See footnote +.)*
- ❑ Inspect engine air cleaner filter if you are driving in dusty conditions. Replace filter if necessary.

55,000 Miles (88 000 km)

- ❑ Change engine oil and filter (or every 3 months, whichever occurs first). *An Emission Control Service.*
- ❑ Rotate tires. See *Tire Inspection and Rotation on page 333* for proper rotation pattern and additional information. *(See footnote +.)*
- ❑ Inspect engine air cleaner filter if you are driving in dusty conditions. Replace filter if necessary.

60,000 Miles (96 000 km)

- ❑ Change engine oil and filter (or every 3 months, whichever occurs first). *An Emission Control Service.*
- ❑ Rotate tires. See *Tire Inspection and Rotation on page 333* for proper rotation pattern and additional information. *(See footnote +.)*
- ❑ Replace engine air cleaner filter (or every 24 months, whichever occurs first). See *Engine Air Cleaner/Filter on page 288* for more information.
- ❑ Replace passenger compartment air filter.
- ❑ Inspect engine accessory drive belts (or every 48 months, whichever occurs first). Visually inspect belt for fraying, excessive cracks, or obvious damage. Replace belt if necessary. *An Emission Control Service.*
- ❑ Inspect for tappet noise and engine vibration. Adjust valve clearance to factory specifications if necessary (or every 48 months, whichever occurs first). *An Emission Control Service.*

Downloaded from www.Manualslib.com manuals search engine

- ❑ Inspect fuel tank, cap, cap gasket, and lines for damage or leaks (or every 24 months, whichever occurs first). Replace parts as needed. *An Emission Control Service. (See footnote †.)*
- ❑ Change manual transaxle fluid every 30,000 miles (48 000 km) only if your vehicle is used to tow a trailer.
- ❑ Change automatic transaxle fluid every 60,000 miles (96 000 km) if the vehicle is mainly driven under one or more of these conditions:
  - In heavy city traffic where the outside temperature regularly reaches 90°F (32°C) or higher.
  - In hilly or mountainous terrain.
  - When doing frequent trailer towing.
  - Uses such as found in taxi, police, or delivery service.

If you do not use your vehicle under any of these conditions, the fluid does not require changing. See Part D: Recommended Fluids and Lubricants on page 394 for the proper fluid to use.

65,000 Miles 104 000 km)

- ❑ Change engine oil and filter (or every 3 months, whichever occurs first). *An Emission Control Service.*
- ❑ Rotate tires. See *Tire Inspection and Rotation on page 333* for proper rotation pattern and additional information. *(See footnote +.)*
- ❑ Inspect engine air cleaner filter if you are driving in dusty conditions. Replace filter if necessary.

70,000 Miles (112 000 km)

- ❑ Change engine oil and filter (or every 3 months, whichever occurs first). *An Emission Control Service.*
- ❑ Rotate tires. See *Tire Inspection and Rotation on page 333* for proper rotation pattern and additional information. *(See footnote +.)*
- ❑ Inspect engine air cleaner filter if you are driving in dusty conditions. Replace filter if necessary.

Downloaded from www.Manualslib.com manuals search engine

75,000 Miles (120 000 km)

- ❑ Change engine oil and filter (or every 3 months, whichever occurs first). *An Emission Control Service.*
- ❑ Rotate tires. See *Tire Inspection and Rotation on page 333* for proper rotation pattern and additional information. *(See footnote +.)*
- ❑ Inspect engine air cleaner filter if you are driving in dusty conditions. Replace filter if necessary.
- ❑ Inspect passenger compartment air filter.
- ❑ Inspect engine accessory drive belts (or 12 months since last inspection). *An Emission Control Service.*

80,000 Miles (128 000 km)

- ❑ Change engine oil and filter (or every 3 months, whichever occurs first). *An Emission Control Service.*
- ❑ Rotate tires. See *Tire Inspection and Rotation on page 333* for proper rotation pattern and additional information. *(See footnote +.)*
- ❑ Inspect engine air cleaner filter if you are driving in dusty conditions. Replace filter if necessary.

85,000 Miles (136 000 km)

- ❑ Change engine oil and filter (or every 3 months, whichever occurs first). *An Emission Control Service.*
- ❑ Rotate tires. See *Tire Inspection and Rotation on page 333* for proper rotation pattern and additional information. *(See footnote +.)*
- ❑ Inspect engine air cleaner filter if you are driving in dusty conditions. Replace filter if necessary.

90,000 Miles (144 000 km)

- ❑ Change engine oil and filter (or every 3 months, whichever occurs first). *An Emission Control Service.*
- ❑ Rotate tires. See *Tire Inspection and Rotation on page 333* for proper rotation pattern and additional information. *(See footnote +.)*
- ❑ Replace engine air cleaner filter (or every 24 months, whichever occurs first). See *Engine Air Cleaner/Filter on page 288* for more information.
- ❑ Replace passenger compartment air filter.

Downloaded from www.Manualslib.com manuals search engine

- ❑ Inspect engine accessory drive belts (or 12 months since last inspection). *An Emission Control Service.*
- ❑ Inspect fuel tank, cap, cap gasket, and lines for damage or leaks (or every 24 months, whichever occurs first). Replace parts as needed. *An Emission Control Service. (See footnote †.)*
- ❑ Change manual transaxle fluid every 30,000 miles (48 000 km) only if your vehicle is used to tow a trailer.

95,000 Miles (152 000 km)

- ❑ Change engine oil and filter (or every 3 months, whichever occurs first). *An Emission Control Service.*
- ❑ Rotate tires. See *Tire Inspection and Rotation on page 333* for proper rotation pattern and additional information. *(See footnote +.)*
- ❑ Inspect engine air cleaner filter if you are driving in dusty conditions. Replace filter if necessary.

100,000 Miles (160 000 km)

- ❑ Change engine oil and filter (or every 3 months, whichever occurs first). *An Emission Control Service.*
- ❑ Rotate tires. See *Tire Inspection and Rotation on page 333* for proper rotation pattern and additional information. *(See footnote +.)*
- ❑ Inspect engine air cleaner filter if you are driving in dusty conditions. Replace filter if necessary.

105,000 Miles (168 000 km)

- ❑ Change engine oil and filter (or every 3 months, whichever occurs first). *An Emission Control Service.*
- ❑ Rotate tires. See *Tire Inspection and Rotation on page 333* for proper rotation pattern and additional information. *(See footnote +.)*
- ❑ Inspect engine air cleaner filter if you are driving in dusty conditions. Replace filter if necessary.
- ❑ Inspect passenger compartment air filter.
- ❑ Inspect engine accessory drive belts (or every 48 months, whichever occurs first). Visually inspect belt for fraying, excessive cracks, or obvious damage. Replace belt if necessary. *An Emission Control Service.*

Downloaded from www.Manualslib.com manuals search engine

110,000 Miles (176 000 km)

- ❑ Change engine oil and filter (or every 3 months, whichever occurs first). *An Emission Control Service.*
- ❑ Rotate tires. See *Tire Inspection and Rotation on page 333* for proper rotation pattern and additional information. *(See footnote +.)*
- ❑ Inspect engine air cleaner filter if you are driving in dusty conditions. Replace filter if necessary.

115,000 Miles (184 000 km)

- ❑ Change engine oil and filter (or every 3 months, whichever occurs first). *An Emission Control Service.*
- ❑ Rotate tires. See *Tire Inspection and Rotation on page 333* for proper rotation pattern and additional information. *(See footnote +.)*
- ❑ Inspect engine air cleaner filter if you are driving in dusty conditions. Replace filter if necessary.

120,000 Miles (192 000 km)

- ❑ Change engine oil and filter (or every 3 months, whichever occurs first). *An Emission Control Service.*
- ❑ Rotate tires. See *Tire Inspection and Rotation on page 333* for proper rotation pattern and additional information. *(See footnote +.)*
- ❑ Replace engine air cleaner filter (or every 24 months, whichever occurs first). See *Engine Air Cleaner/Filter on page 288* for more information.
- ❑ Replace passenger compartment air filter.
- ❑ Inspect engine accessory drive belts (or every 48 months, whichever occurs first). Visually inspect belt for fraying, excessive cracks, or obvious damage. Replace belt if necessary. *An Emission Control Service.*
- ❑ Replace spark plugs. *An Emission Control Service.*

Downloaded from www.Manualslib.com manuals search engine

- ❑ Inspect for tappet noise and engine vibration. Adjust valve clearance to factory specifications if necessary (or every 48 months, whichever occurs first). *An Emission Control Service.*
- ❑ Inspect fuel tank, cap, cap gasket, and lines for damage or leaks (or every 24 months, whichever occurs first). Replace parts as needed. *An Emission Control Service. (See footnote †.)*
- ❑ Change manual transaxle fluid every 30,000 miles (48 000 km) only if your vehicle is used to tow a trailer.
- ❑ Change automatic transaxle fluid every 60,000 miles (96 000 km) if the vehicle is mainly driven under one or more of these conditions:
  - – In heavy city traffic where the outside temperature regularly reaches 90°F (32°C) or higher.
  - – In hilly or mountainous terrain.
  - – When doing frequent trailer towing.
  - – Uses such as found in taxi, police, or delivery service.

If you do not use your vehicle under any of these conditions, the fluid does not require changing. See Part D: Recommended Fluids and Lubricants on page 394 for the proper fluid to use.

150,000 Miles (240 000 km)

- ❑ Drain, flush, and refill the cooling system (or every 5 years, whichever occurs first). This service can be complex; you should have your dealer perform this service. See *Engine Coolant on page 294* for what to use. Inspect hoses. Clean radiator, condenser, pressure cap, and neck. Pressure test cooling system and pressure cap. *An Emission Control Service.*

Downloaded from www.Manualslib.com manuals search engine

Part B: Owner Checks and Services

Listed in this part are owner checks and services which should be performed at the intervals specified to help ensure the safety, dependability and emission control performance of your vehicle.

Be sure any necessary repairs are completed at once. Whenever any fluids or lubricants are added to your vehicle, make sure they are the proper ones, as shown in Part D.

At Each Fuel Fill

It is important for you or a service station attendant to perform these underhood checks at each fuel fill.

Engine Oil Level Check

Check the engine oil level and add the proper oil if necessary. See *Engine Oil on page 284* for further details.

Engine Coolant Level Check

Check the engine coolant level and add the proper coolant mixture if necessary. See *Engine Coolant on page 294* for further details.

Windshield Washer Fluid Level Check

Check the windshield washer fluid level in the windshield washer fluid reservoir and add the proper fluid if necessary. See *Windshield Washer Fluid on page 305* for further details.

Hood Latch Operation Check

Pull the primary hood latch release handle inside the vehicle. The secondary latch should keep the hood from opening all the way when the primary latch is released. Make sure the hood closes firmly. See *Hood Release on page 280* for further details.

At Least Once a Month

Tire Inflation Check

Visually inspect the tires and make sure the tires are inflated to the correct pressures. Do not forget to check the spare tire. See *Inflation - Tire Pressure on page 329*.

Downloaded from www.Manualslib.com manuals search engine

At Least Twice a Year

Restraint System Check

Make sure the safety belt reminder light and all your belts, buckles, latch plates, retractors and anchorages are working properly. Look for any other loose or damaged safety belt system parts. If you see anything that might keep a safety belt system from doing its job, have it repaired. Have any torn or frayed safety belts replaced.

Also look for any opened or broken airbag coverings, and have them repaired or replaced. (The airbag system does not need regular maintenance.)

Wiper Blade Check

Inspect wiper blades for wear or cracking. Replace blade inserts that appear worn or damaged or that streak or miss areas of the windshield. Also see *Windshield, Backglass, and Wiper Blades on page 359*.

Weatherstrip Lubrication

Silicone grease on weatherstrips will make them last longer, seal better, and not stick or squeak. Apply silicone grease with a clean cloth. During very cold, damp weather more frequent application may be required. See *Part D: Recommended Fluids and Lubricants on page 394*.

Fluid Level Check

Check the power steering pump, rear axle, transfer case, and automatic or manual transaxle fluid levels and add as needed. See *Power Steering Fluid on page 304* and *Automatic Transaxle Fluid on page 290* or *Manual Transaxle Fluid on page 292*. Check for leaks. A fluid loss in these systems could indicate a problem. Have the system inspected and repaired at once.

Downloaded from www.Manualslib.com manuals search engine

At Least Once a Year

Key Lock Cylinders Service

Lubricate the key lock cylinders with the lubricant specified in Part D.

Seat Operation Check

Make sure the head restraints stay in position and all seat latches lock. Check that the recliner holds by pushing and pulling the seatback while it is reclined.

Body Lubrication Service

Lubricate all hood latch assembly, secondary latch, pivots, spring anchor, release pawl, hood and body door hinges, rear compartment, and any folding seat hardware. Part D tells you what to use. More frequent lubrication may be required when exposed to a corrosive environment.

Starter Switch Check

⚠ CAUTION:

When you are doing this inspection, the vehicle could move suddenly. If the vehicle moves, you or others could be injured.

1. Before you start, be sure you have enough room around the vehicle.
2. Firmly apply both the parking brake and the regular brake. See *Parking Brake on page 114*.

   Do not use the accelerator pedal, and be ready to turn off the engine immediately if it starts.

Downloaded from www.Manualslib.com manuals search engine

3. On automatic transaxle vehicles, try to start the engine in each gear. The vehicle should start only in PARK (P) or NEUTRAL (N). If the vehicle starts in any other position, contact your GM Goodwrench® dealer for service.

   On manual transaxle vehicles, put the shift lever in NEUTRAL (N), push the clutch pedal down halfway, and try to start the engine. The vehicle should start only when the clutch pedal is pushed down all the way to the floor. If the vehicle starts when the clutch pedal is not pushed all the way down, contact your GM Goodwrench® dealer for service.

Automatic Transaxle Shift Lock Control System Check

⚠ CAUTION:

When you are doing this inspection, the vehicle could move suddenly. If the vehicle moves, you or others could be injured.

1. Before you start, be sure you have enough room around the vehicle. It should be parked on a level surface.
2. Firmly apply the parking brake. See *Parking Brake on page 114*.

   Be ready to apply the regular brake immediately if the vehicle begins to move.
3. With the engine off, turn the ignition to ON, but do not start the engine. Without applying the regular brake, try to move the shift lever out of PARK (P) with normal effort. If the shift lever moves out of PARK (P), contact your GM Goodwrench® dealer for service.

Downloaded from www.Manualslib.com manuals search engine

Ignition Transaxle Lock Check

While parked, and with the parking brake set, try to turn the ignition to LOCK in each shift lever position.

- With an automatic transaxle, the ignition should turn to LOCK only when the shift lever is in PARK (P).
- With a manual transaxle, the ignition should turn to LOCK only if you push the ignition key in farther, while turning it toward LOCK.

Contact your GM Goodwrench® dealer if service is required.

Parking Brake and Automatic Transaxle Park (P) Mechanism Check

⚠ CAUTION:

When you are doing this check, your vehicle could begin to move. You or others could be injured and property could be damaged. Make sure there is room in front of your vehicle in case it begins to roll. Be ready to apply the regular brake at once should the vehicle begin to move.

Downloaded from www.Manualslib.com manuals search engine

Park on a fairly steep hill, with the vehicle facing downhill. Keeping your foot on the regular brake, set the parking brake.

- To check the parking brake's holding ability: With the engine running and transaxle in NEUTRAL (N), slowly remove foot pressure from the regular brake pedal. Do this until the vehicle is held by the parking brake only.
- To check the PARK (P) mechanism's holding ability: With the engine running, shift to PARK (P). Then release the parking brake followed by the regular brake.

Contact your GM Goodwrench® dealer if service is required.

Underbody Flushing Service

At least every spring, use plain water to flush any corrosive materials from the underbody. Take care to clean thoroughly any areas where mud and other debris can collect.

Downloaded from www.Manualslib.com manuals search engine

Part C: Periodic Maintenance Inspections

Listed in this part are inspections and services which should be performed at least twice a year (for instance, each spring and fall). *You should let your dealer's service department do these jobs. Make sure any necessary repairs are completed at once.*

Proper procedures to perform these services may be found in a service manual. See *Service Publications Ordering Information on page 417*.

Steering, Suspension and Front Drive Axle Boot and Seal Inspection

Inspect the front and rear suspension and steering system for damaged, loose or missing parts, signs of wear or lack of lubrication. Inspect the power steering lines and hoses for proper hook-up, binding, leaks, cracks, chafing, etc. Clean and then inspect the drive axle boot seals for damage, tears or leakage. Replace seals if necessary.

Exhaust System Inspection

Inspect the complete exhaust system. Inspect the body near the exhaust system. Look for broken, damaged, missing or out-of-position parts as well as open seams, holes, loose connections or other conditions which could cause a heat build-up in the floor pan or could let exhaust fumes into the vehicle. See *Engine Exhaust on page 119*.

Fuel System Inspection

Inspect the complete fuel system for damage or leaks.

Downloaded from www.Manualslib.com manuals search engine

Engine Cooling System Inspection

Inspect the hoses and have them replaced if they are cracked, swollen or deteriorated. Inspect all pipes, fittings and clamps; replace as needed. Clean the outside of the radiator and air conditioning condenser. To help ensure proper operation, a pressure test of the cooling system and pressure cap is recommended at least once a year.

Throttle System Inspection

Inspect the throttle system for interference or binding, and for damaged or missing parts. Replace parts as needed. Replace any components that have high effort or excessive wear. Do not lubricate accelerator and cruise control cables.

Brake System Inspection

Inspect the complete system. Inspect brake lines and hoses for proper hook-up, binding, leaks, cracks, chafing, etc. Inspect disc brake pads for wear and rotors for surface condition. Also inspect drum brake linings for wear and cracks. Inspect other brake parts, including drums, wheel cylinders, calipers, parking brake, etc. Check parking brake adjustment. You may need to have your brakes inspected more often if your driving habits or conditions result in frequent braking.

Downloaded from www.Manualslib.com manuals search engine

Part D: Recommended Fluids and Lubricants

Fluids and lubricants identified below by name, part number, or specification can be obtained from your dealer.

Usage	Fluid/Lubricant
Engine Oil	Engine oil which meets GM Standard GM6094M and displays the American Petroleum Institute Certified for Gasoline Engines starburst symbol. GM Goodwrench® oil meets all the requirements for your vehicle. To determine the proper viscosity for your vehicle's engine, see *Engine Oil on page 284*.
Engine Coolant	50/50 mixture of clean, drinkable water and use only DEX-COOL® Coolant. See *Engine Coolant on page 294*.
Hydraulic Brake/Clutch System	Delco® Supreme 11 Brake Fluid or equivalent DOT-3 brake fluid.
Windshield Washer Solvent	GM Optikleen® Washer Solvent.
Power Steering System	DEXRON®-VI Automatic Transmission Fluid.
Manual Transaxle	GM Goodwrench® Synthetic Manual Transmission Fluid (GM Part No. U.S. 12346190, in Canada 10953477 — 1 quart) or SAE 75W-90 GL-5 gear oil.
Automatic Transaxle	Use only T-IV Automatic Transmission Fluid (GM Part No. U.S. 88900925, in Canada 22689186). See *Automatic Transaxle Fluid on page 290*.
Key Lock Cylinders	Multi-Purpose Lubricant, Superlube (GM Part No. U.S. 12346241, in Canada 10953474).
Manual Transaxle Shift Linkage	Chassis Lubricant (GM Part No. U.S. 12377985, in Canada 88901242) or lubricant meeting requirements of NLGI #2, Category LB or GC-LB.

Downloaded from www.Manualslib.com manuals search engine

Usage	Fluid/Lubricant
Clutch Linkage Pivot Points	Chassis Lubricant (GM Part No. U.S. 12377985, in Canada 88901242) or lubricant meeting requirements of NLGI #2, Category LB or GC-LB.
Floor Shift Linkage	Lubriplate Lubricant Aerosol (GM Part No. U.S. 12346293, in Canada 992723) or lubricant meeting requirements of NLGI #2 Category LB or GC-LB.
Chassis Lubrication	Chassis Lubricant (GM Part No. U.S. 12377985, in Canada 88901242) or lubricant meeting requirements of NLGI #2, Category LB or GC-LB.

Usage	Fluid/Lubricant
Hood Latch Assembly, Secondary Latch, Pivots, Spring Anchor, and Release Pawl	Lubriplate Lubricant Aerosol (GM Part No. U.S. 12346293, in Canada 992723) or lubricant meeting requirements of NLGI #2, Category LB or GC-LB.
Hood and Door Hinges	Multi-Purpose Lubricant, Superlube (GM Part No. U.S. 12346241, in Canada 10953474).
Weatherstrip Conditioning	Weatherstrip Lubricant (GM Part No. U.S. 3634770, in Canada 10953518) or Dielectric Silicone Grease (GM Part No. U.S. 12345579, in Canada 992887).

Downloaded from www.Manualslib.com manuals search engine

Part E: Maintenance Record

After the scheduled services are performed, record the date, odometer reading, and who performed the service and any additional information from “Owner Checks and Services” or “Periodic Maintenance” on the following record pages. Also, you should retain all maintenance receipts.

Maintenance Record

Date	Odometer Reading	Serviced By	Maintenance Record

Downloaded from www.Manualslib.com manuals search engine

Maintenance Record (cont'd)

Date	Odometer Reading	Serviced By	Maintenance Record

Downloaded from www.Manualslib.com manuals search engine

Maintenance Record (cont'd)

Date	Odometer Reading	Serviced By	Maintenance Record

Downloaded from www.Manualslib.com manuals search engine

Section 7 Customer Assistance Information

Customer Assistance and Information 400
Customer Satisfaction Procedure 400
Online Owner Center 403
Customer Assistance for Text Telephone (TTY) Users 404
Customer Assistance Offices 404
GM Mobility Reimbursement Program 405
Roadside Assistance Program 406
Courtesy Transportation 409
Vehicle Data Collection and Event Data Recorders 411
Collision Damage Repair 412
Reporting Safety Defects 416
Reporting Safety Defects to the United States Government 416
Reporting Safety Defects to the Canadian Government 416
Reporting Safety Defects to General Motors 417
Service Publications Ordering Information 417

Downloaded from www.Manualslib.com manuals search engine

Customer Assistance and Information

Customer Satisfaction Procedure

Your satisfaction and goodwill are important to your dealer and to Pontiac. Normally, any concerns with the sales transaction or the operation of your vehicle will be resolved by your dealer's sales or service departments. Sometimes, however, despite the best intentions of all concerned, misunderstandings can occur. If your concern has not been resolved to your satisfaction, the following steps should be taken:

STEP ONE: Discuss your concern with a member of dealership management. Normally, concerns can be quickly resolved at that level. If the matter has already been reviewed with the sales, service, or parts manager, contact the owner of the dealership or the general manager.

STEP TWO: If after contacting a member of dealership management, it appears your concern cannot be resolved by the dealership without further help, in the U.S., contact the Pontiac Customer Assistance Center by calling 1-800-762-2737. In Canada, contact General Motors of Canada Customer Communication Centre in Oshawa by calling 1-800-263-3777 (English) or 1-800-263-7854 (French).

We encourage you to call the toll-free number in order to give your inquiry prompt attention. Please have the following information available to give the Customer Assistance Representative:

- Vehicle Identification Number (VIN). This is available from the vehicle registration or title, or the plate at the top left of the instrument panel and visible through the windshield.
- Dealership name and location.
- Vehicle delivery date and present mileage.

When contacting Pontiac, please remember that your concern will likely be resolved at a dealer's facility. That is why we suggest you follow Step One first if you have a concern.

Downloaded from www.Manualslib.com manuals search engine

STEP THREE — U.S. Owners: Both General Motors and your dealer are committed to making sure you are completely satisfied with your new vehicle. However, if you continue to remain unsatisfied after following the procedure outlined in Steps One and Two, you should file with the BBB Auto Line Program to enforce your rights.

The BBB Auto Line Program is an out of court program administered by the Council of Better Business Bureaus to settle automotive disputes regarding vehicle repairs or the interpretation of the New Vehicle Limited Warranty. Although you may be required to resort to this informal dispute resolution program prior to filing a court action, use of the program is free of charge and your case will generally be heard within 40 days. If you do not agree with the decision given in your case, you may reject it and proceed with any other venue for relief available to you.

You can contact the BBB Auto Line Program using the toll-free telephone number or write them at the following address:

BBB Auto Line Program
Council of Better Business Bureaus, Inc.
4200 Wilson Boulevard
Suite 800
Arlington, VA 22203-1838

Telephone: 1-800-955-5100

This program is available in all 50 states and the District of Columbia. Eligibility is limited by vehicle age, mileage and other factors. General Motors reserves the right to change eligibility limitations and/or discontinue its participation in this program.

Downloaded from www.Manualslib.com manuals search engine

STEP THREE — Canadian Owners: In the event that you do not feel your concerns have been addressed after following the procedure outlined in Steps One and Two, General Motors of Canada Limited wants you to be aware of its participation in a no-charge Mediation/Arbitration Program. General Motors of Canada Limited has committed to binding arbitration of owner disputes involving factory-related vehicle service claims. The program provides for the review of the facts involved by an impartial third party arbiter, and may include an informal hearing before the arbiter. The program is designed so that the entire dispute settlement process, from the time you file your complaint to the final decision, should be completed in approximately 70 days. We believe our impartial program offers advantages over courts in most jurisdictions because it is informal, quick, and free of charge.

For further information concerning eligibility in the Canadian Motor Vehicle Arbitration Plan (CAMVAP), call toll-free 1-800-207-0685. Alternatively, you can call the General Motors Customer Communication Centre, 1-800-263-3777 (English), 1-800-263-7854 (French), or write to:

Mediation/Arbitration Program
c/o Customer Communication Centre
General Motors of Canada Limited
Mail Code: CA1-163-005
1908 Colonel Sam Drive
Oshawa, Ontario L1H 8P7

Your inquiry should be accompanied by your Vehicle Identification Number (VIN).

Downloaded from www.Manualslib.com manuals search engine

Online Owner Center

Online Owner Center (United States only)

The Owner Center is a resource for your GM ownership needs. Specific vehicle information can be found in one place.

The Online Owner Center allows you to:

- Get e-mail service reminders.
- Access information about your specific vehicle, including tips and videos and an electronic version of this owner manual.
- Keep track of your vehicle's service history and maintenance schedule.
- Find GM dealers for service nationwide.
- Receive special promotions and privileges only available to members.

Refer to www.MyGMLink.com on the web for updated information and to register your vehicle.

My GM Canada (Canada only)

My GM Canada is a password-protected section of gmcanada.com where you can save information on GM vehicles, get personalized offers, and use handy tools and forms with greater ease.

Here are a few of the valuable tools and services you will have access to:

- My Showroom: Find and save information on vehicles and current offers in your area.
- My Dealers/Retailers: Save details such as address and phone number for each of your preferred GM Dealers or Retailers.
- My Driveway: Receive service reminders and helpful advice on owning and maintaining your vehicle.
- My Preferences: Manage your profile, subscribe to E-News and use tools and forms with greater ease.

To sign up to My GM Canada, visit the My GM Canada section within www.gmcanada.com.

Downloaded from www.Manualslib.com manuals search engine

Customer Assistance for Text Telephone (TTY) Users

To assist customers who are deaf, hard of hearing, or speech-impaired and who use Text Telephones (TTYs), Pontiac has TTY equipment available at its Customer Assistance Center. Any TTY user in the U.S. can communicate with Pontiac by dialing: 1-800-833-PONT (7668). (TTY users in Canada can dial 1-800-263-3830.)

Customer Assistance Offices

Pontiac encourages customers to call the toll-free number for assistance. However, if a customer wishes to write or e-mail Pontiac, the letter should be addressed to:

United States — Customer Assistance

Pontiac Customer Assistance Center
P.O. Box 33172
Detroit, MI 48232-5172

www.Pontiac.com
1-800-762-2737 or
1-800-833-7668 (For Text Telephone devices (TTYs))
Roadside Assistance: 1-800-ROADSIDE (762-3743)
Fax Number: 313-381-0022

From Puerto Rico:
1-800-496-9992 (English)
1-800-496-9993 (Spanish)
Fax Number: 313-381-0022

From U.S. Virgin Islands:
1-800-496-9994
Fax Number: 313-381-0022

Downloaded from www.Manualslib.com manuals search engine

Canada — Customer Assistance

General Motors of Canada Limited
Customer Communication Centre, CA1-163-005
1908 Colonel Sam Drive
Oshawa, Ontario L1H 8P7

www.gmcanada.com
1-800-263-3777 (English)
1-800-263-7854 (French)
1-800-263-3830 (For Text Telephone devices (TTYs))
Roadside Assistance: 1-800-268-6800

Overseas — Customer Assistance

Please contact the local General Motors Business Unit.

Mexico, Central America and Caribbean Islands/Countries (Except Puerto Rico and U.S. Virgin Islands) — Customer Assistance

General Motors de Mexico, S. de R.L. de C.V.
Customer Assistance Center
Paseo de la Reforma #2740
Col. Lomas de Bezares
C.P. 11910, Mexico, D.F.
01-800-508-0000
Long Distance: 011-52-53 29 0 800

GM Mobility Reimbursement Program

GM MOBILITY℠

This program, available to qualified applicants, can reimburse you up to $1,000 of the cost of eligible aftermarket adaptive equipment required for your vehicle, such as hand controls or a wheelchair/scooter lift.

The offer is available for a very limited period of time from the date of vehicle purchase/lease. For more details, or to determine your vehicle's eligibility, visit gmmobility.com or call the GM Mobility Assistance Center at 1-800-323-9935. Text telephone (TTY) users, call 1-800-833-9935.

General Motors of Canada also has a Mobility Program. Call 1-800-GM-DRIVE (463-7483) for details. TTY users call 1-800-263-3830.

Downloaded from www.Manualslib.com manuals search engine

Roadside Assistance Program

In the U.S., call **1-800-ROADSIDE (762-3743)**

In Canada, call **1-800-268-6800**

Service available 24 hours a day, 365 days a year.

As the owner of a new Pontiac vehicle, you are automatically enrolled in the Pontiac Roadside Assistance program. This value-added service is intended to provide you with peace of mind as you drive in the city or travel the open road.

Who is Covered?

Roadside Assistance coverage is for the vehicle operator, regardless of ownership. A person driving this vehicle without the consent of the owner is not eligible for coverage.

The following services are provided in the U.S. during the Bumper-to-Bumper warranty period and, in Canada, during the Base Warranty coverage period of the New Vehicle Limited Warranty, up to a maximum coverage of $100.

- **Fuel Delivery:** Delivery of enough fuel for the customer to get to the nearest service station (approximately $5 in the U.S. and 10 litres in Canada). Service to provide diesel may be restricted. For safety reasons, propane and other alternative fuels will not be provided through this service.
- **Lock-out Service:** To ensure security, the driver must present the vehicle registration and personal ID before lock-out service is provided. Lock-out service is covered at no charge if you are unable to gain entry into your vehicle. If your vehicle does not start, Roadside Assistance will arrange to have your vehicle towed to the nearest authorized dealership. In the U.S., replacement keys made at the customer's expense will be covered within 10 miles (16 km).

Downloaded from www.Manualslib.com manuals search engine

- **Emergency Tow From a Public Roadway or Highway:** Tow to the nearest dealership for warranty service or in the event of a vehicle-disabling accident. Winch-out assistance when the vehicle is mired in sand, mud, or snow.
- **Flat Tire Change:** Installation of your spare tire in good condition is covered at no charge. The customer is responsible for the repair or replacement of the tire if not covered by a warrantable failure.
- **Jump Start:** No-start occurrences which require a battery jump start is covered at no charge.

Additional Services for Canadian Customers

- **Trip Routing Service:** Upon Request, Roadside Assistance can send you detailed, computer-personalized maps, highlighting your choice of either the most direct route or the most scenic route to your destination, anywhere in North America, along with any helpful travel information we may have pertaining to your trip. To request this service, please call us toll-free at 1-800-268-6800.

  We will make every attempt to send your personalized trip routing as quickly as possible, but it's best to allow three weeks before your planned departure date. Trip routing requests will be limited to six per calendar year.
- **Trip Interruption Benefits and Assistance:** In the event of a warranty related vehicle disablement, while en route and over 250 kilometres from original point of departure, you may qualify for trip interruption expense assistance. This assistance covers reasonable reimbursement of up to a maximum of $500 (Canadian) for (A) meals (maximum of $50/day), (B) lodging (maximum of $100/night) and (C) alternate ground transportation (maximum of $40/day). This benefit is to assist you with some of the unplanned expense you may incur while waiting for your vehicle to be repaired.

  Pre-authorization, original detailed receipts and a copy of the repair order are required.

  Once authorization has been given, your advisor will help you make any necessary arrangements and explain how to claim for trip interruption expense assistance.

Downloaded from www.Manualslib.com manuals search engine

- **Alternative Service:** There may be times, when Roadside Assistance cannot provide timely assistance, your advisor may authorize you to secure local emergency road service, and you will be reimbursed up to $100 upon submission of the original receipt to Roadside Assistance.

In many instances, mechanical failures are covered under Pontiac's Bumper-to-Bumper warranty, and the duration of the Base Warranty Coverage for Canadian customers of the new Vehicle Limited Warranty. However, any cost for parts and labor for non-warranty repairs are the responsibility of the driver.

For prompt and efficient assistance when calling, please provide the following to the Roadside Assistance Representative:

- Your name, home address, and home telephone number.
- Telephone number of your location.
- Location of the vehicle.
- Model, year, color, and license plate number of the vehicle.
- Odometer reading, Vehicle Identification Number (VIN), and delivery date of the vehicle.
- Description of the problem.

While we hope you never have the occasion to use our service, it is added security while traveling for you and your family. Remember, we are only a phone call away. Pontiac Roadside Assistance: **1-800-ROADSIDE (762-3743)**, text telephone (TTY) users, call **1-888-889-2438**, Canadian customers call **1-800-268-6800**.

Pontiac and General Motors of Canada Limited reserve the right to limit services or reimbursement to an owner or driver when, in their sole discretion, the claims become excessive in frequency or type of occurrence.

Roadside Assistance is not part of or included in the coverage provided by the New Vehicle Limited Warranty. Pontiac and General Motors of Canada Limited reserve the right to make any changes or discontinue the Roadside Assistance program at any time without notification.

Downloaded from www.Manualslib.com manuals search engine

Towing and Road Service Exclusions

Specifically excluded from Roadside Assistance coverage are towing or services for vehicles operated on a non-public roadway or highway, fines, impound towing caused by a violation of local, Municipal, State, Provincial, or Federal law, and mounting, dismounting or changing of snow tires, chains, or other traction devices.

Courtesy Transportation

To enhance your ownership experience, we and our participating dealers are proud to offer Courtesy Transportation, a customer support program for new vehicles.

For warranty repairs during the Bumper-to-Bumper (U.S.) or Base Warranty Coverage period (Canada), provided by the New Vehicle Limited Warranty, interim transportation may be available under the Courtesy Transportation program. Several courtesy transportation options are available to assist in reducing your inconvenience when warranty repairs are required.

Courtesy Transportation is not a part of the New Vehicle Limited Warranty and is available only at participating dealers. A separate booklet entitled “Warranty and Owner Assistance Information” furnished with each new vehicle provides detailed warranty coverage information.

Scheduling Service Appointments

When your vehicle requires warranty service, contact your dealer and request an appointment. By scheduling a service appointment and advising your service consultant of your transportation needs, your dealer can help minimize your inconvenience.

If your vehicle cannot be scheduled into the service department immediately, keep driving it until it can be scheduled for service, unless, of course, the problem is safety-related. If it is, please call your dealership, let them know this, and ask for instructions.

If the dealer requests that you simply drop the vehicle off for service, you are urged to do so as early in the work day as possible to allow for the same day repair.

Downloaded from www.Manualslib.com manuals search engine

Transportation Options

Warranty service can generally be completed while you wait. However, if you are unable to wait, GM helps to minimize your inconvenience by providing several transportation options. Depending on the circumstances, your dealer can offer you one of the following:

Shuttle Service

Shuttle service is the preferred means of offering Courtesy Transportation and participating dealers can provide you with shuttle service to get you to your destination with minimal interruption of your daily schedule. This includes one-way or round trip shuttle service within reasonable time and distance parameters for the dealer's area.

Public Transportation or Fuel Reimbursement

If your vehicle requires overnight warranty repairs, and public transportation is used as 'shuttle service,' the reimbursement is limited to the associated shuttle allowance and must be supported by original receipts.

In addition, for U.S. customers, should you arrange transportation through a friend or relative, limited reimbursement for reasonable fuel expenses may be available. Claim amounts should reflect actual costs and be supported by original receipts.

Courtesy Rental Vehicle

Your dealer may arrange to provide you with a courtesy rental vehicle or reimburse you for a rental vehicle that you obtain if your vehicle is kept for an overnight warranty repair. Rental reimbursement will be limited and must be supported by original receipts. This requires that you sign and complete a rental agreement and meet state/provincial, local, and rental vehicle provider requirements. Requirements vary and may include minimum age requirements, insurance coverage, credit card, etc. You are responsible for fuel usage charges and may also be responsible for taxes, levies, usage fees, excessive mileage, or rental usage beyond the completion of the repair.

Generally it is not possible to provide a like-vehicle as a courtesy rental.

Downloaded from www.Manualslib.com manuals search engine

Additional Program Information

All program options, such as shuttle service, may not be available at every dealer. Please contact your dealer for specific information about availability. All Courtesy Transportation arrangements will be administered by appropriate dealer personnel.

General Motors reserves the right to unilaterally modify, change or discontinue Courtesy Transportation at any time and to resolve all questions of claim eligibility pursuant to the terms and conditions described herein at its sole discretion.

Vehicle Data Collection and Event Data Recorders

Your vehicle, like other modern motor vehicles, has a number of sophisticated computer systems that monitor and control several aspects of the vehicle's performance. Your vehicle uses on-board vehicle computers to monitor emission control components to optimize fuel economy, to monitor conditions for airbag deployment and, if so equipped, to provide anti-lock braking and to help the driver control the vehicle in difficult driving situations.

Some information may be stored during regular operations to facilitate repair of detected malfunctions; other information is stored only in a crash event by computer systems, such as those commonly called event data recorders (EDR).

In a crash event, computer systems, such as the Airbag Sensing and Diagnostic Module (SDM) in your vehicle may record information about safety belt usage. If your vehicle is equipped with StabiliTrak®, steering performance, including yaw rate, steering wheel angle, and lateral acceleration, is also recorded. Unlike the data recorders on many airplanes, these on-board systems do not record sounds, such as conversation of vehicle occupants.

To read this information, special equipment is needed and access to the vehicle or the device that stores the data is required. GM will not access information about a crash event or share it with others other than:

- with the consent of the vehicle owner or, if the vehicle is leased, with the consent of the lessee,
- in response to an official request of police or similar government office,

Downloaded from www.Manualslib.com manuals search engine

- as part of GM's defense of litigation through the discovery process, or
- as required by law.

In addition, once GM collects or receives data, GM may:

- use the data for GM research needs,
- make it available for research where appropriate confidentiality is to be maintained and need is shown, or
- share summary data which is not tied to a specific vehicle with non-GM organizations for research purposes.

Others, such as law enforcement, may have access to the special equipment that can read the information if they have access to the vehicle or the device that stores the data.

If your vehicle is equipped with OnStar®, please check the OnStar® subscription service agreement or manual for information on its operations and data collection.

Collision Damage Repair

If your vehicle is involved in a collision and it is damaged, have the damage repaired by a qualified technician using the proper equipment and quality replacement parts. Poorly performed collision repairs will diminish your vehicle's resale value, and safety performance can be compromised in subsequent collisions.

Collision Parts

Genuine GM Collision parts are new parts made with the same materials and construction methods as the parts with which your vehicle was originally built. Genuine GM Collision parts are your best choice to assure that your vehicle's designed appearance, durability, and safety are preserved. The use of Genuine GM parts can help maintain your GM New Vehicle Warranty.

Recycled original equipment parts may also be used for repair. These parts are typically removed from vehicles that were total losses in prior accidents. In most cases, the parts being recycled are from undamaged sections of the vehicle.

Downloaded from www.Manualslib.com manuals search engine

A recycled original equipment GM part, may be an acceptable choice to maintain your vehicle's originally designed appearance and safety performance, however, the history of these parts is not known. Such parts are not covered by your GM New Vehicle Limited Warranty, and any related failures are not covered by that warranty.

Aftermarket collision parts are also available. These are made by companies other than GM and may not have been tested for your vehicle. As a result, these parts may fit poorly, exhibit premature durability/corrosion problems, and may not perform properly in subsequent collisions. Aftermarket parts are not covered by your GM New Vehicle Limited Warranty, and any vehicle failure related to such parts are not covered by that warranty.

Repair Facility

GM also recommends that you choose a collision repair facility that meets your needs before you ever need collision repairs. Your GM dealer may have a collision repair center with GM-trained technicians and state of the art equipment, or be able to recommend a collision repair center that has GM-trained technicians and comparable equipment.

Insuring Your Vehicle

Protect your investment in your GM vehicle with comprehensive and collision insurance coverage. There are significant differences in the quality of coverage afforded by various insurance policy terms. Many insurance policies provide reduced protection to your GM vehicle by limiting compensation for damage repairs by using aftermarket collision parts. Some insurance companies will not specify aftermarket collision parts. When purchasing insurance, we recommend that you assure your vehicle will be repaired with GM original equipment collision parts. If such insurance coverage is not available from your current insurance carrier, consider switching to another insurance carrier.

If your vehicle is leased, the leasing company may require you to have insurance that assures repairs with Genuine GM Original Equipment Manufacturer (OEM) parts or Genuine Manufacturer replacement parts. Read your lease carefully, as you may be charged at the end of your lease for poor quality repairs.

Downloaded from www.Manualslib.com manuals search engine

If an Accident Occurs

Here is what to do if you are involved in an accident.

- Try to relax and then check to make sure you are all right. If you are uninjured, make sure that no one else in your vehicle, or the other vehicle, is injured.
- If there has been an injury, call 911 for help. Do not leave the scene of an accident until all matters have been taken care of. Move your vehicle only if its position puts you in danger or you are instructed to move it by a police officer.
- Give only the necessary and requested information to police and other parties involved in the accident. Do not discuss your personal condition, mental frame of mind, or anything unrelated to the accident. This will help guard against post-accident legal action.
- If you need roadside assistance, call GM Roadside Assistance. See *Roadside Assistance Program on page 406* for more information.
- If your vehicle cannot be driven, know where the towing service will be taking it. Get a card from the tow truck operator or write down the driver's name, the service's name, and the phone number.
- Remove any valuables from your vehicle before it is towed away. Make sure this includes your insurance information and registration if you keep these items in your vehicle.
- Gather the important information you will need from the other driver. Things like name, address, phone number, driver's license number, vehicle license plate, vehicle make, model and model year, Vehicle Identification Number (VIN), insurance company and policy number, and a general description of the damage to the other vehicle.

Downloaded from www.Manualslib.com manuals search engine

- If possible, call your insurance company from the scene of the accident. They will walk you through the information they will need. If they ask for a police report, phone or go to the police department headquarters the next day and you can get a copy of the report for a nominal fee. In some states/provinces with “no fault” insurance laws, a report may not be necessary. This is especially true if there are no injuries and both vehicles are driveable.
- Choose a reputable collision repair facility for your vehicle. Whether you select a GM dealer or a private collision repair facility to fix the damage, make sure you are comfortable with them. Remember, you will have to feel comfortable with their work for a long time.
- Once you have an estimate, read it carefully and make sure you understand what work will be performed on your vehicle. If you have a question, ask for an explanation. Reputable shops welcome this opportunity.

Managing the Vehicle Damage Repair Process

In the event that your vehicle requires damage repairs, GM recommends that you take an active role in its repair. If you have a pre-determined repair facility of choice, take your vehicle there, or have it towed there. Specify to the facility that any required replacement collision parts be original equipment parts, either new Genuine GM parts or recycled original GM parts. Remember, recycled parts will not be covered by your GM vehicle warranty.

Insurance pays the bill for the repair, but you must live with the repair. Depending on your policy limits, your insurance company may initially value the repair using aftermarket parts. Discuss this with your repair professional, and insist on Genuine GM parts. Remember if your vehicle is leased you may be obligated to have the vehicle repaired with Genuine GM parts, even if your insurance coverage does not pay the full cost.

Downloaded from www.Manualslib.com manuals search engine

If another party's insurance company is paying for the repairs, you are not obligated to accept a repair valuation based on that insurance company's collision policy repair limits, as you have no contractual limits with that company. In such cases, you can have control of the repair and parts choices as long as cost stays within reasonable limits.

Reporting Safety Defects

Reporting Safety Defects to the United States Government

If you believe that your vehicle has a defect which could cause a crash or could cause injury or death, you should immediately inform the National Highway Traffic Safety Administration (NHTSA), in addition to notifying General Motors.

If NHTSA receives similar complaints, it may open an investigation, and if it finds that a safety defect exists in a group of vehicles, it may order a recall and remedy campaign. However, NHTSA cannot become involved in individual problems between you, your dealer, or General Motors.

To contact NHTSA, you may call the Vehicle Safety Hotline toll-free at 1-888-327-4236 (TTY: 1-800-424-9153); go to http://www.safercar.gov; or write to:

Administrator, NHTSA
400 Seventh Street, SW.
Washington, D.C. 20590

You can also obtain other information about motor vehicle safety from http://www.safercar.gov.

Reporting Safety Defects to the Canadian Government

If you live in Canada, and you believe that your vehicle has a safety defect, you should immediately notify Transport Canada, in addition to notifying General Motors of Canada Limited. You may call them at 1-800-333-0510 or write to:

Transport Canada
Road Safety Branch
2780 Sheffield Road
Ottawa, Ontario K1B 3V9

Downloaded from www.Manualslib.com manuals search engine

Reporting Safety Defects to General Motors

In addition to notifying NHTSA (or Transport Canada) in a situation like this, we certainly hope you'll notify us. Please call us at 1-800-762-2737, or write:

Pontiac Customer Assistance Center
P.O. Box 33172
Detroit, MI 48232-5172

In Canada, please call us at 1-800-263-3777 (English) or 1-800-263-7854 (French). Or, write:

General Motors of Canada Limited
Customer Communication Centre, CA1-163-005
1908 Colonel Sam Drive
Oshawa, Ontario L1H 8P7

Service Publications Ordering Information

Service Manuals

Service Manuals have the diagnosis and repair information on engines, transmission, axle suspension, brakes, electrical, steering, body, etc.

Transmission, Transaxle, Transfer Case Unit Repair Manual

This manual provides information on unit repair service procedures, adjustments, and specifications for GM transmissions, transaxles, and transfer cases.

Service Bulletins

Service Bulletins give technical service information needed to knowledgeably service General Motors cars and trucks. Each bulletin contains instructions to assist in the diagnosis and service of your vehicle.

In Canada, the service bulletin reference number can be obtained by contacting your General Motors dealer or by calling 1-800-GM-DRIVE (1-800-463-7483). This reference number is needed to order the service bulletin from Helm, Inc.

RETAIL SELL PRICE: $6.00 US + Processing Fee

Downloaded from www.Manualslib.com manuals search engine

Owner Information

Owner publications are written specifically for owners and intended to provide basic operational information about the vehicle. The owner manual will include the Maintenance Schedule for all models.

In-Portfolio: Includes a Portfolio, Owner Manual, and Warranty Booklet.

RETAIL SELL PRICE: $35.00 US
+ Processing Fee

Without Portfolio: Owner's Manual only.

RETAIL SELL PRICE: $25.00 US
+ Processing Fee

Current and Past Model Order Forms

Technical Service Bulletins and Manuals are available for current and past model GM vehicles. To request an order form, please specify year and model name of the vehicle.

ORDER TOLL FREE: 1-800-551-4123
Monday-Friday 8:00 AM - 6:00 PM
Eastern Time

For Credit Card Orders Only
(VISA-MasterCard-Discover), visit Helm, Inc. on the World Wide Web at: www.helminc.com

Or you can write to:

Helm, Incorporated
P.O. Box 07130
Detroit, MI 48207

Prices are subject to change without notice and without incurring obligation. Allow ample time for delivery.

Note to Canadian Customers: All listed prices are quoted in U.S. funds. Canadian residents are to make checks payable in U.S. funds.

Downloaded from www.Manualslib.com manuals search engine

A

Accessories and Modifications 272
Accessory Power Outlet(s) 150
Adding Equipment to Your Airbag-Equipped Vehicle 81
Additives, Fuel 275
Add-On Electrical Equipment 364
Air Cleaner/Filter, Engine 288
Air Conditioning 152
Airbag
  Passenger Status Indicator 163
  Readiness Light 162
Airbag Sensing and Diagnostic Module (SDM) 411
Airbag System 63
  Adding Equipment to Your Airbag-Equipped Vehicle 81
  How Does an Airbag Restrain? 72
  Passenger Sensing System 74
  Servicing Your Airbag-Equipped Vehicle 80
  What Makes an Airbag Inflate? 71
  What Will You See After an Airbag Inflates? 72
  When Should an Airbag Inflate? 70
  Where Are the Airbags? 66
Antenna, Fixed Mast 219
Antenna, XM™ Satellite Radio
  Antenna System 219
Anti-Lock Brake System (ABS) 227
Anti-Lock Brake, System Warning Light 167
Appearance Care
  Aluminum Wheels 359
  Care of Safety Belts 357
  Chemical Paint Spotting 361
  Cleaning Exterior Lamps/Lenses 358
  Cleaning the Inside of Your Vehicle 354
  Fabric/Carpet 356
  Finish Care 358
  Finish Damage 361
  Instrument Panel, Vinyl, and Other Plastic Surfaces 357
  Leather 356
  Sheet Metal Damage 360
  Tires 360
  Underbody Maintenance 361
  Vehicle Care/Appearance Materials 362
  Washing Your Vehicle 358
  Weatherstrips 358
  Windshield, Backglass, and Wiper Blades 359
Ashtray(s) 151

Downloaded from www.Manualslib.com manuals search engine

Audio System(s) 177
Care of Your CD Player 219
Care of Your CDs 219
Fixed Mast Antenna 219
Radio with CD 179, 188
Radio with Six-Disc CD 198
Setting the Time 178
Understanding Radio Reception 218
XM™ Satellite Radio Antenna System 219
Automatic Headlamp System 147
Automatic Transaxle
Fluid 290
Operation 108

B

Battery 309
Before Leaving on a Long Trip 244
Brake
Anti-Lock Brake System (ABS) 227
Emergencies 229
Panic Assist 231
Parking 114
System Inspection 393
System Warning Light 166
Brakes 306
Braking 226
Braking in Emergencies 229
Break-In, New Vehicle 102
Bulb Replacement 315
Back-Up Lamps 320
Center High-Mounted
Stoplamp (CHMSL) 317
Halogen Bulbs 315
Headlamps, Front Turn Signal, and
Parking Lamps 316
Replacement Bulbs 320
Taillamps, Turn Signal, and Stoplamps 318
Buying New Tires 336

C

California Fuel 275
California Proposition 65 Warning 273
Canadian Owners 3
Capacities and Specifications 369
Carbon Monoxide 96, 119, 248, 261
Care of
Safety Belts 357
Your CD Player 219
Your CDs 219
Cargo Cover 129
Cargo Tie Downs 130
CD, MP3 210

Downloaded from www.Manualslib.com manuals search engine

Center Console Storage Area 127
Center High-Mounted Stoplamp (CHMSL) 317
Chains, Tire 341
Charging System Light 165
Check
  Engine Light 170
Checking Things Under the Hood 280
Chemical Paint Spotting 361
Child Restraints
  Child Restraint Systems 43
  Infants and Young Children 40
  Lower Anchors and Tethers for Children 49
  Older Children 37
  Securing a Child Restraint in a Rear Seat Position 56
  Securing a Child Restraint in the Right Front Seat Position 58
  Where to Put the Restraint 47
Cigarette Lighter 151
Cleaning
  Aluminum Wheels 359
  Exterior Lamps/Lenses 358
  Fabric/Carpet 356
  Finish Care 358
  Inside of Your Vehicle 354
  Instrument Panel, Vinyl, and Other Plastic Surfaces 357
Cleaning (cont.)
  Leather 356
  Tires 360
  Underbody Maintenance 361
  Washing Your Vehicle 358
  Weatherstrips 358
  Windshield, Backglass, and Wiper Blades 359
Climate Control System 152
  Air Filter, Passenger Compartment 156
  Outlet Adjustment 155
Clock 178
Clutch, Hydraulic 293
Coinholder(s) 127
Collision Damage Repair 412
Compact Spare Tire 354
Content Theft-Deterrent 100
Control of a Vehicle 226
Coolant
  Engine Temperature Gage 169
  Heater, Engine 106
Cooling System 299
Cruise Control 143
Cruise Control Light 174
Cupholder(s) 127

Downloaded from www.Manualslib.com manuals search engine

Customer Assistance Information
Courtesy Transportation 409
Customer Assistance for Text Telephone (TTY) Users 404
Customer Assistance Offices 404
Customer Satisfaction Procedure 400
GM Mobility Reimbursement Program 405
Reporting Safety Defects to General Motors 417
Reporting Safety Defects to the Canadian Government 416
Reporting Safety Defects to the United States Government 416
Roadside Assistance Program 406
Service Publications Ordering Information 417

D

Daytime Running Lamps 147
Defensive Driving 222
Disc, MP3 210
Doing Your Own Service Work 273
Door
Ajar Light 175
Locks 92
Door (cont.)
Power Door Locks 94
Rear Door Security Locks 95
Driver
Position, Safety Belt 24
Seat Height Adjuster 9
Driving
At Night 238
City 242
Defensive 222
Drunken 223
Freeway 243
Hill and Mountain Roads 246
In Rain and on Wet Roads 239
Rocking Your Vehicle to Get it Out 253
Winter 248

E

Electrical System
Add-On Equipment 364
Engine Compartment Fuse Block 367
Fuses and Circuit Breakers 365
Headlamp Wiring 364
Instrument Panel Fuse Block 365

Downloaded from www.Manualslib.com manuals search engine

Electrical System (cont.)
Power Windows and Other Power Options 364
Windshield Wiper Fuses 364
Engine
Air Cleaner/Filter 288
Battery 309
Check and Service Engine Soon Light 170
Coolant 294
Coolant Heater 106
Coolant Temperature Gage 169
Cooling System Inspection 393
Drive Belt Routing 371
Engine Compartment Overview 282
Exhaust 119
Oil 284
Overheating 297
Starting 104
Entry Lighting 149
Event Data Recorders (EDR) 411
Extender, Safety Belt 36
Exterior Lamps 146

F

Filter
Engine Air Cleaner 288
Finish Damage 361
Fixed Mast Antenna 219
Flashers, Hazard Warning 138
Flash-to-Pass 141
Flat Tire 342
Flat Tire, Changing 343
Flat Tire, Storing 351
Floor Mats 127
Fluid
Automatic Transaxle 290
Manual Transaxle 292
Power Steering 304
Windshield Washer 305
Fog Lamps 148
Folding Seatback, Passenger 14
Fuel 274
Additives 275
California Fuel 275
Filling a Portable Fuel Container 279

Downloaded from www.Manualslib.com manuals search engine

Fuel (cont.)
Filling Your Tank 277
Fuels in Foreign Countries 276
Gage 176
Gasoline Octane 274
Gasoline Specifications 274
Low Warning Light 177
System Inspection 392
Fuses
Engine Compartment Fuse Block 367
Fuses and Circuit Breakers 365
Instrument Panel Fuse Block 365
Windshield Wiper 364

G

Gage
Engine Coolant Temperature 169
Fuel 176
Speedometer 160
Tachometer 161
Gasoline
Octane 274
Specifications 274
Glove Box 127
GM Mobility Reimbursement Program 405

H

Hazard Warning Flashers 138
Head Restraints 13
Headlamp Wiring 364
Headlamps
Automatic Headlamp System 147
Bulb Replacement 315
Daytime Running Lamps 147
Flash-to-Pass 141
Halogen Bulbs 315
Headlamps, Front Turn Signal, and Parking Lamps 316
High/Low Beam Changer 140
On Reminder 146
Heater 152
Height Adjuster, Driver Seat 9
Highbeam On Light 175
Highway Hypnosis 245
Hill and Mountain Roads 246
Hood
Checking Things Under 280
Release 280
Horn 138
How to Use This Manual 4
How to Wear Safety Belts Properly 23
Hydraulic Clutch 293

Downloaded from www.Manualslib.com manuals search engine

I

Ignition Positions 103
Infants and Young Children, Restraints 40
Inflation - Tire Pressure 329
Inspection
  Brake System 393
  Engine Cooling System 393
  Exhaust System 392
  Fuel System 392
  Part C - Periodic Maintenance 392
  Steering, Suspension and Front Drive
    Axle Boot and Seal 392
  Throttle System 393
Instrument Panel
  Overview 136
  Storage Area 127
Instrument Panel (I/P)
  Brightness 148
  Cluster 159
Interior Lamps Control 149

J

Jump Starting 310

K

Keyless Entry System 89
Keys 87

L

Labeling, Tire Sidewall 323
Lamps
  Exterior 146
  Fog 148
  Interior Control 149
  Reading 150
LATCH System
  Child Restraints 49
Liftgate/Liftglass 96
Liftglass/Liftgate 96
Light
  Airbag Readiness 162
  Anti-Lock Brake System Warning 167
  Brake System Warning 166
  Charging System 165
  Cruise Control 174
  Door Ajar 175
  Highbeam On 175
  Lights On Reminder 174
  Low Fuel Warning 177

Downloaded from www.Manualslib.com manuals search engine

Light (cont.)
Low Tire Pressure Warning Light 167
Low Washer Fluid Warning 175
Malfunction Indicator 170
Oil Pressure 173
Overdrive Off 174
Passenger Airbag Status Indicator 163
Safety Belt Reminder 161
StabiliTrak® Indicator 168
Taillamp Indicator 174
TCS Warning Light 168
Traction Control System (TCS) Warning ... 168
Lighting
Entry 149
Loading Your Vehicle 253
Locks
Door 92
Power Door 94
Rear Door Security Locks 95
Loss of Control 237
Low Fuel Warning Light 177
Low Washer Fluid Warning Light 175

M

Maintenance, Normal Replacement Parts 370
Maintenance Schedule
At Each Fuel Fill 386
At Least Once a Month 386
At Least Once a Year 388
At Least Twice a Year 387
Brake System Inspection 393
Engine Cooling System Inspection 393
Exhaust System Inspection 392
Fuel System Inspection 392
How This Section is Organized 374
Introduction 374
Maintenance Requirements 374
Part A - Scheduled Maintenance Services 376
Part B - Owner Checks and Services 386
Part C - Periodic Maintenance Inspections 392
Part D - Recommended Fluids and Lubricants 394
Part E - Maintenance Record 396
Scheduled Maintenance 377

Downloaded from www.Manualslib.com manuals search engine

Maintenance Schedule (cont.)
Steering, Suspension and Front Drive
Axle Boot and Seal Inspection 392
Throttle System Inspection 393
Using 376
Your Vehicle and the Environment 374
Malfunction Indicator Light 170
Manual Seats 8
Manual Transaxle
Fluid 292
Operation 111
Manual Windows 99
Mirrors
Automatic Dimming Rearview 122
Manual Rearview Mirror 121
Manual Rearview Mirror with OnStar® 121
Outside Convex Mirror 123
Outside Remote Control Mirrors 122
MP3 210
MyGMLink.com 403

N

New Vehicle Break-In 102
Normal Maintenance Replacement Parts 370

O

Odometer 160
Odometers, Trip 160
Off-Road Recovery 234
Oil
Engine 284
Pressure Light 173
Older Children, Restraints 37
Online Owner Center 403
OnStar® System, see OnStar® Manual 123
Other Warning Devices 138
Outlet Adjustment 155
Outlet(s), Accessory Power 150
Outside
Convex Mirror 123
Remote Controls Mirrors 122
Overdrive Off 111
Overdrive Off Light 174
Owners, Canadian 3

Downloaded from www.Manualslib.com manuals search engine

P

Paint, Damage 361
Panic Brake Assist 231
Park (P)
  Shifting Into 115
  Shifting Out of 117
Parking
  Brake 114
  Over Things That Burn 118
Parking Your Vehicle 118
Part A - Scheduled Maintenance Services ... 376
Part B - Owner Checks and Services 386
Part C - Periodic Maintenance Inspections .. 392
Part D - Recommended Fluids and
  Lubricants 394
Part E - Maintenance Record 396
Passenger Airbag Status Indicator 163
Passenger Compartment Air Filter 156
Passenger Sensing System 74
Passing 235
Power
  Accessory Outlet(s) 150
  Door Locks 94
  Electrical System 364
Power (cont.)
  Outlet 115 Volt Alternating Current 151
  Steering Fluid 304
  Windows 99
Pretensioners, Safety Belt 36

Q

Questions and Answers About Safety Belts ... 22

R

Radiator Pressure Cap 297
Radios 177
  Care of Your CD Player 219
  Care of Your CDs 219
  Radio with CD 179, 188
  Radio with Six-Disc CD 198
  Setting the Time 178
  Understanding Reception 218
Reading Lamps 150
Rear Cargo Accessory Track System 129
Rear Door Security Locks 95
Rear Seat Operation 16
Rear Seat Passengers, Safety Belts 33
Rear Storage Area 128
Rear Windshield Washer/Wiper 142

Downloaded from www.Manualslib.com manuals search engine

Rearview Mirror, Automatic Dimming 122
Rearview Mirror with OnStar® 121
Rearview Mirrors 121
Reclining Seatbacks 10
Recreational Vehicle Towing 259
Remote Keyless Entry (RKE) System 89
Remote Keyless Entry (RKE) System,
  Operation 90
Removing the Flat Tire and Installing the
  Spare Tire 346
Removing the Spare Tire and Tools 344
Replacement Bulbs 320
Reporting Safety Defects
  Canadian Government 416
  General Motors 417
  United States Government 416
Restraint System Check
  Checking the Restraint Systems 82
  Replacing Restraint System Parts
    After a Crash 83
Right Front Passenger Position,
  Safety Belts 32
Roadside
  Assistance Program 406
Rocking Your Vehicle to Get it Out 253
Routing, Engine Drive Belt 371
Running the Engine While Parked 120

S

Safety Belt
  Pretensioners 36
  Reminder Light 161
Safety Belts
  Care of 357
  Driver Position 24
  How to Wear Safety Belts Properly 23
  Questions and Answers About
    Safety Belts 22
  Rear Seat Passengers 33
  Right Front Passenger Position 32
  Safety Belt Extender 36
  Safety Belt Use During Pregnancy 32
  Safety Belts Are for Everyone 18
  Shoulder Belt Height Adjuster 31
Safety Warnings and Symbols 4
Scheduled Maintenance 377
Seatback, Folding Passenger 14
Seats
  Driver Seat Height Adjuster 9
  Head Restraints 13

Downloaded from www.Manualslib.com manuals search engine

Seats (cont.)
Manual 8
Passenger Folding Seatback 14
Rear Seat Operation 16
Reclining Seatbacks 10
Securing a Child Restraint
Rear Seat Position 56
Right Front Seat Position 58
Service 272
Accessories and Modifications 272
Adding Equipment to the Outside of Your Vehicle 274
California Proposition 65 Warning 273
Doing Your Own Work 273
Engine Soon Light 170
Publications Ordering Information 417
Servicing Your Airbag-Equipped Vehicle 80
Sheet Metal Damage 360
Shifting Into Park (P) 115
Shifting Out of Park (P) 117
Shoulder Belt Height Adjuster 31
Signals, Turn and Lane-Change 140
Spare Tire
Compact 354
Installing 346
Removing 344
Storing 351
Specifications, Capacities 369
Speedometer 160
StabiliTrak® System 231
StabiliTrak® Indicator Light 168
Starting Your Engine 104
Steering 232
Steering, Suspension and Front Drive Axle Boot and Seal Inspection 392
Steering Wheel, Tilt Wheel 139
Storage Areas
Center Console Storage Area 127
Coinholder(s) 127
Cupholder(s) 127
Glove Box 127
Instrument Panel Storage Area 127
Rear Cargo Accessory Track System 129
Rear Storage Area 128
Stuck in Sand, Mud, Ice, or Snow 252
Sun Visors 99
Sunroof 131

T

Tachometer 161
Taillamp Indicator Light 174
Taillamps
Turn Signal, and Stoplamps 318

Downloaded from www.Manualslib.com manuals search engine

TCS Warning Light 168
Theft-Deterrent Systems 100
Content Theft-Deterrent 100
Throttle System Inspection 393
Tilt Wheel 139
Time, Setting 178
Tires 322
Aluminum Wheels, Cleaning 359
Buying New Tires 336
Chains 341
Changing a Flat Tire 343
Cleaning 360
Compact Spare Tire 354
Different Size 337
If a Tire Goes Flat 342
Inflation - Tire Pressure 329
Inspection and Rotation 333
Installing the Spare Tire 346
Pressure Monitor System 330
Removing the Flat Tire 346
Removing the Spare Tire and Tools 344
Storing a Flat or Spare Tire and Tools 351
Tire Sidewall Labeling 323
Tire Terminology and Definitions 326
Uniform Tire Quality Grading 338
Wheel Alignment and Tire Balance 339
Wheel Replacement 340
Tires (cont.)
When It Is Time for New Tires 335
Towing
Recreational Vehicle 259
Towing a Trailer 261
Your Vehicle 259
Traction
Control System (TCS) 230
Control System Warning Light 168
StabiliTrak® System 231
Transaxle
Fluid, Automatic 290
Fluid, Manual 292
Transaxle Operation, Automatic 108
Transaxle Operation, Manual 111
Trip Odometers 160
Turn and Lane-Change Signals 140
Turn Signal/Multifunction Lever 139

U

Understanding Radio Reception 218
Uniform Tire Quality Grading 338

Downloaded from www.Manualslib.com manuals search engine

V

Vehicle
Control 226
Damage Warnings 5
Loading 253
Parking Your 118
Symbols 5
Vehicle Data Collection and Event Data Recorders 411
Vehicle Identification Number (VIN) 363
Service Parts Identification Label 363
Ventilation Adjustment 155
Visors 99

W

Warning Lights, Gages and Indicators 158
Warnings
Hazard Warning Flashers 138
Other Warning Devices 138
Safety and Symbols 4
Vehicle Damage 5
Washer Fluid, Low Warning Light 175
Wheels
Alignment and Tire Balance 339
Different Size 337
Replacement 340
Where to Put the Restraint 47
Windows 98
Manual 99
Power 99
Windshield
Backglass, and Wiper Blades, Cleaning ... 359
Washer 142
Washer Fluid 305
Wiper Blade Replacement 321
Wiper Fuses 364
Wipers 141
Windshield, Rear Washer/Wiper 142
Winter Driving 248

X

XM Radio Messages 216
XM™ Satellite Radio Antenna System 219

Y

Your Vehicle and the Environment 374

Downloaded from www.Manualslib.com manuals search engine