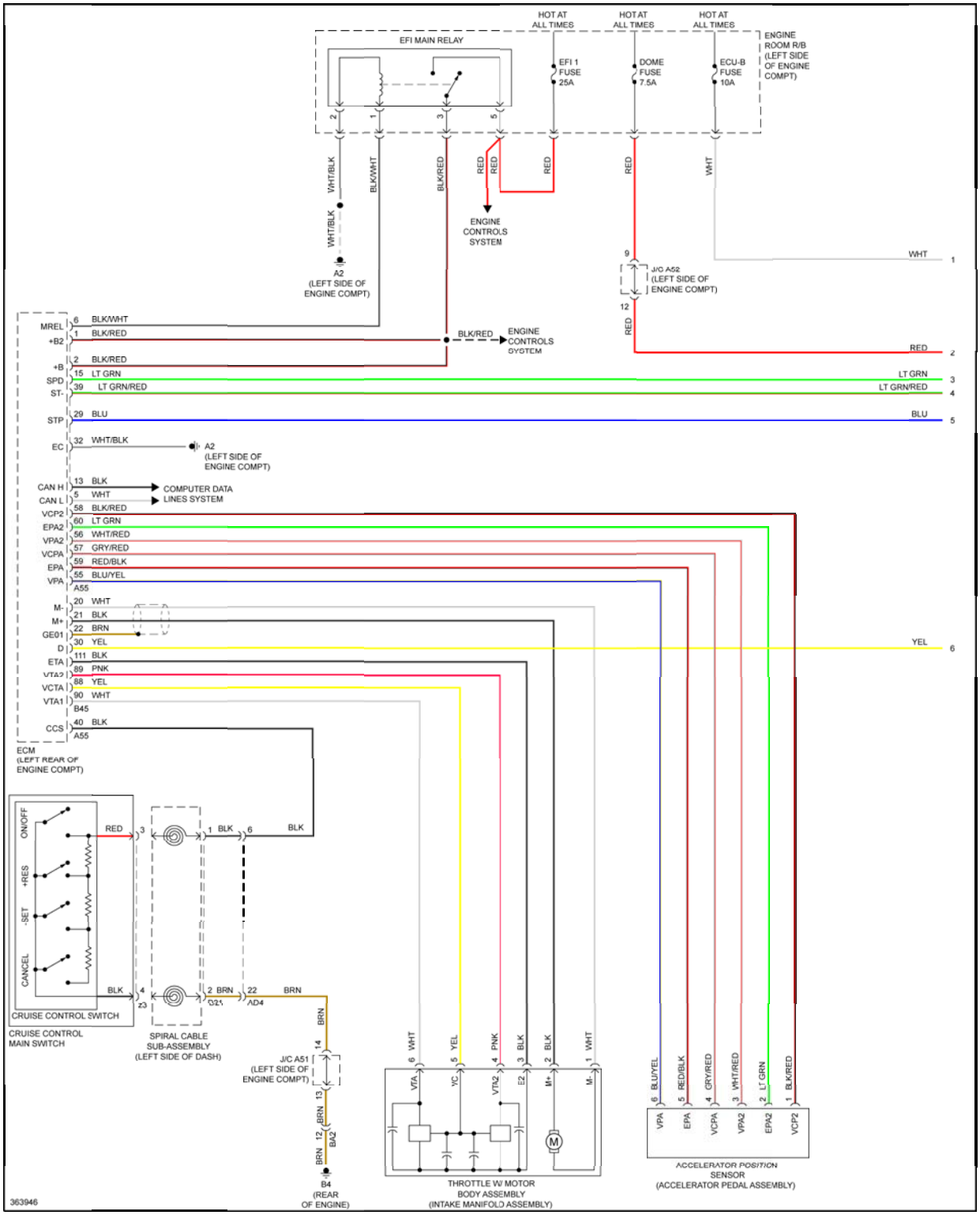

Fig. 19: 2.7L, Cruise Control Circuit (1 of 2)

cardiagn.com

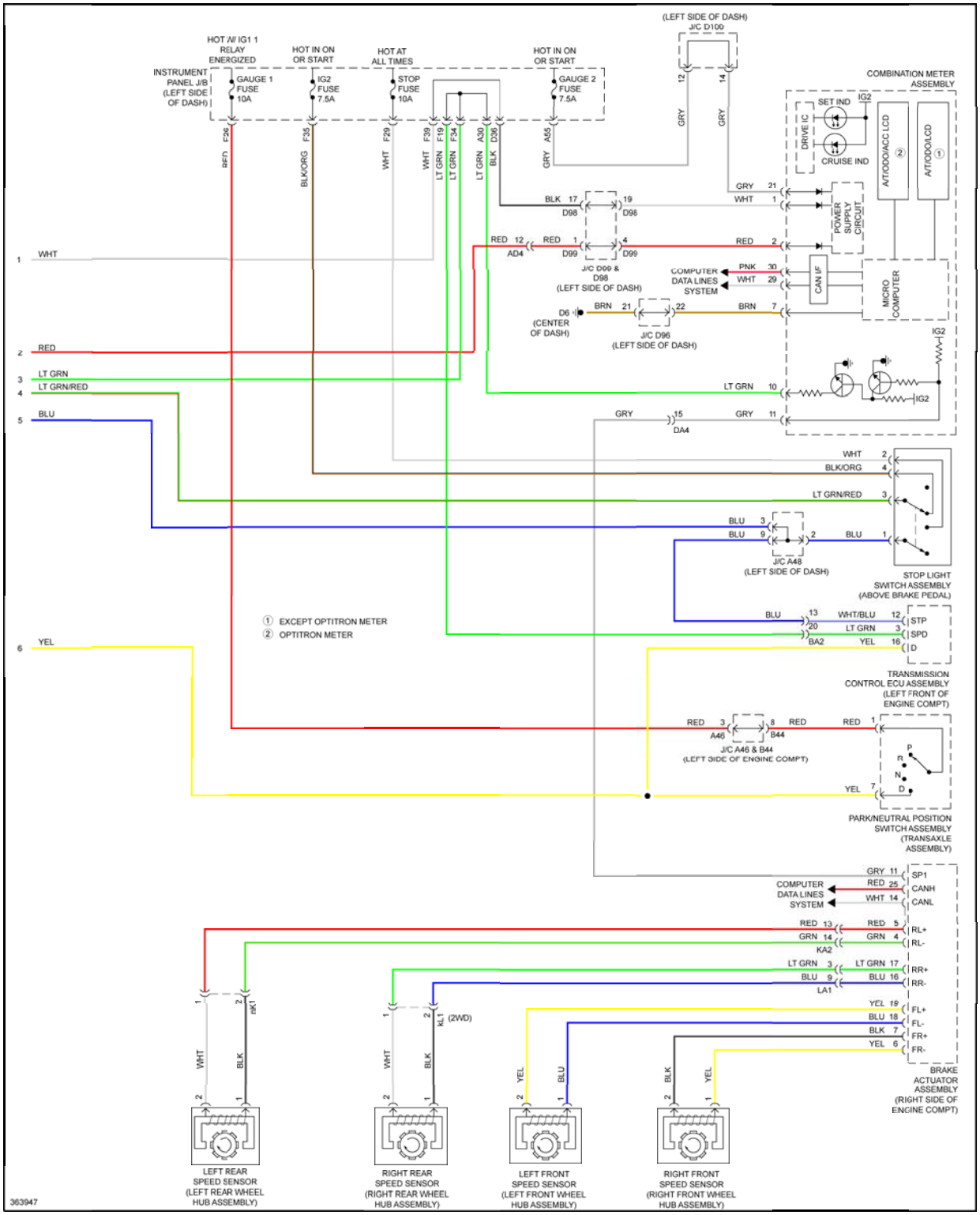

Fig. 20: 2.7L, Cruise Control Circuit (2 of 2)

cardiagn.com

3.5L

cardiagn.com