A000A01A-GAT

This Owner's Manual should be considered a part of the car and remain with it when it is sold for the use of the next owner.

OWNER'S I.D.

ORIGINAL: NAME: _____

ADDRESS: STREET: _____

TOWN: _____

COUNTRY: _____

P.CODE: _____

DATE OF SALE: _____

SUBSEQUENT: NAME: _____

ADDRESS: STREET: _____

TOWN: _____

COUNTRY: _____

P.CODE: _____

TRANSFER DATE: _____

HYUNDAI

H-1

HA1FL002

OWNER'S MANUAL

A030A01P-GAT

Operation
Maintenance
Specifications

All information in the Owner's Manual is current at the time of publication. Hyundai reserves the right to make changes at any time as part of our policy of continual product improvement may be carried out.

This manual applies to current Hyundai *H-1* models and explanations of optional as well as standard equipment are included. As a result, you may find material in this manual that does not apply to your specific vehicle.

A020A01P-AAT

RESPONSIBILITY FOR MAINTENANCE

The maintenance requirements for your new Hyundai are found in Section 6. As the owner, it is your responsibility to see that all maintenance operations specified by the manufacturer are carried out at the appropriate intervals. When the vehicle is used in severe driving conditions, more frequent maintenance is required for some operations. Maintenance requirements for severe operating conditions are also included in Section 6.

A040A01A-AAT

FOREWORD

Thank you for choosing Hyundai. We are pleased to welcome you to the growing number of discriminating people who drive Hyundais. The advanced engineering and high-quality construction of each Hyundai we build is something of which we're very proud.

Your Owner's Manual will introduce you to the features and operation of your new Hyundai. It is suggested that you read it carefully because the information it contains can contribute greatly to the satisfaction you receive from your new car.

The manufacturer also recommends that all service and maintenance on your car be performed by an authorized Hyundai dealer. Hyundai dealers are prepared to provide high-quality service, maintenance and any other assistance that may be required.

A050A05A-AAT

HYUNDAI MOTOR COMPANY

Note: Because future owners will also need the information included in this manual, if you sell this Hyundai, please leave the manual in the vehicle for their use. Thank you.

CAUTION:
Severe engine and transmission damage may result from the use of poor quality fuels and lubricants that do not meet Hyundai specifications. You must always use high quality fuels and lubricants that meet the specifications listed on Page 9-4 in the Vehicle Specifications section of the Owner's Manual.

Copyright 2006 Hyundai Motor Company. All rights reserved. No part of this publication may be reproduced, stored in any retrieval system or transmitted in any form or by any means without the prior written permission of Hyundai Motor Company.

A070A01A-GAT

CAUTION: MODIFICATIONS TO YOUR HYUNDAI

Modification of components may void the manufacturer's warranty
Your Hyundai should not be modified in any way. Modifications may adversely affect the safety, durability and performance of your Hyundai. Components which are subjected to modification or are added to the vehicle resulting in consequential damage are not covered by the vehicle manufacturer's warranty.

A080A01S-AAT

TWO-WAY RADIO OR CELLULAR TELEPHONE INSTALLATION

Your vehicle is equipped with electronic fuel injection and other electronic components. It is possible for an improperly installed/adjusted two-way radio or cellular telephone to adversely affect electronic systems. For this reason, we recommend that you carefully follow the radio manufacturer's instructions or consult your Hyundai dealer for precautionary measures or special instructions if you choose to install one of these devices.

A090A01A-AAT

SAFETY AND VEHICLE DAMAGE WARNING

This manual includes information titled as WARNING, CAUTION and NOTE. These titles indicate the following:

WARNING:
This indicates that a condition may result in harm, serious injury or death to you or other persons if the warning is not heeded. Follow the advice provided with the warning.

CAUTION:
This indicates that a condition may result in damage to your vehicle or its equipment if the caution is not heeded. Follow the advice provided with the caution.

NOTE:
This indicates that interesting or helpful information is being provided.

A100A01L-GAT

GUIDE TO HYUNDAI GENUINE PARTS

1. What are Hyundai Genuine Parts?

Hyundai Genuine Parts are the same parts used by Hyundai Motor Company to manufacture vehicles. They are designed and tested for the optimum safety, performance, and reliability to our customers.

2. Why should you use genuine parts?

Hyundai Genuine Parts are engineered and built to meet rigid manufacturing requirements. Using imitation, counterfeit or used salvage parts are not covered under the Hyundai New Vehicle Limited Warranty or any other Hyundai warranty. In addition, any damage to or failure of Genuine Hyundai Parts caused by the installation or failure of an imitation, counterfeit or used salvage part is not covered by Hyundai Motor Company.

3. How can you tell if you purchasing Hyundai Genuine Parts?

Look for the Hyundai Genuine Parts Logo on the package (see below).

The export specifications are written in English only.

Hyundai Genuine Parts are only sold through authorized Hyundai Dealership and Service Center.

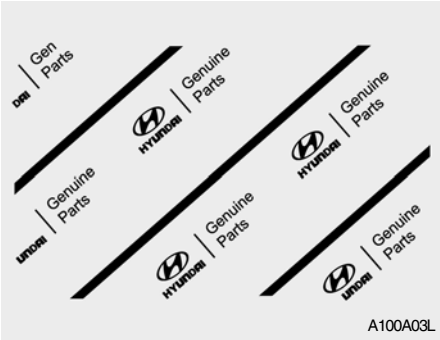

A100A03L

A100A01L

A100A02L

A100A04L

TABLE OF CONTENTS

SECTION

BEFORE DRIVING YOUR VEHICLE	1
INSTRUMENTS AND CONTROLS	2
STARTING AND OPERATING	3
IN CASE OF EMERGENCY	4
APPEARANCE CARE	5
VEHICLE MAINTENANCE REQUIRMENTS	6
EMISSION CONTROL SYSTEM	7
DO-IT-YOURSELF MAINTENANCE	8
VEHICLE SPECIFICATIONS	9
INDEX	10

INSTRUMENTS AND CONTROLS (MINIBUS/VAN)

B250A01P-GAT

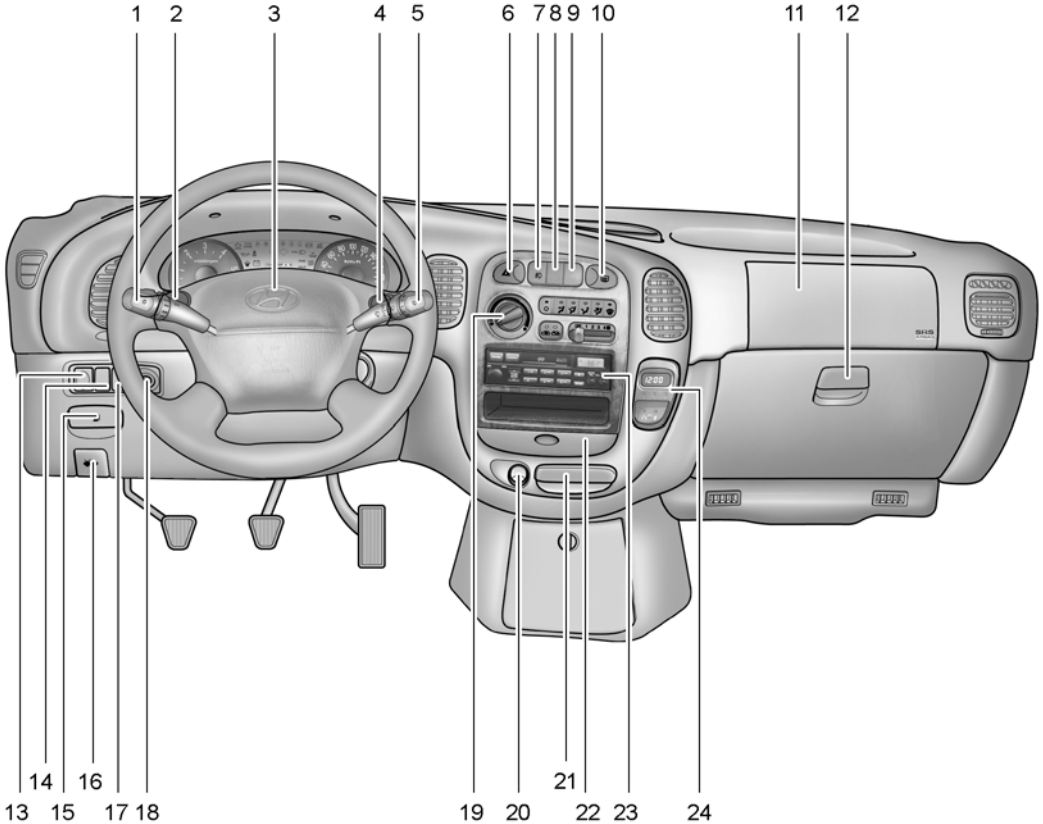

HSRFL002-1

1. Multi-function light switch
2. Seat warmer switch (If installed)
3. Horn/Driver's side airbag (If installed)
4. Rear heater switch (If installed)
5. Windshield wiper/Washer switch
6. Hazard warning switch
7. Front fog light switch (If installed)
8. 4WD Switch (If installed)
9. Rear fog light switch (If installed)
10. Front/Rear window defroster switch
11. Passenger's side airbag (If installed)
12. Glove box
13. Headlight leveling device switch (If installed)
14. ECT switch (Automatic transmission only)
15. Fuel-filler lid release lever
16. Hood release lever
17. Panel brightness control knob (Rheostat) (If installed)
18. Engine RPM adjustment knob (If installed)
19. Heater/Air conditioner control panel
20. Cigarette lighter
21. Ashtray
22. Drink holder
23. Audio system (If installed)
24. Digital clock (If installed)

CAUTION:

When installing the container of liquid air refresher inside a vehicle, do not place it near the instrument cluster nor on the crash pad surface. If there is any leakage from the air refresher onto these areas (Instrument cluster, crash pad or air ventilator), it may damage these parts. If the liquid from air refresher does leak onto these areas, wash them with water immediately.

INSTRUMENTS AND CONTROLS (TRUCK)

B250B01P-GAT

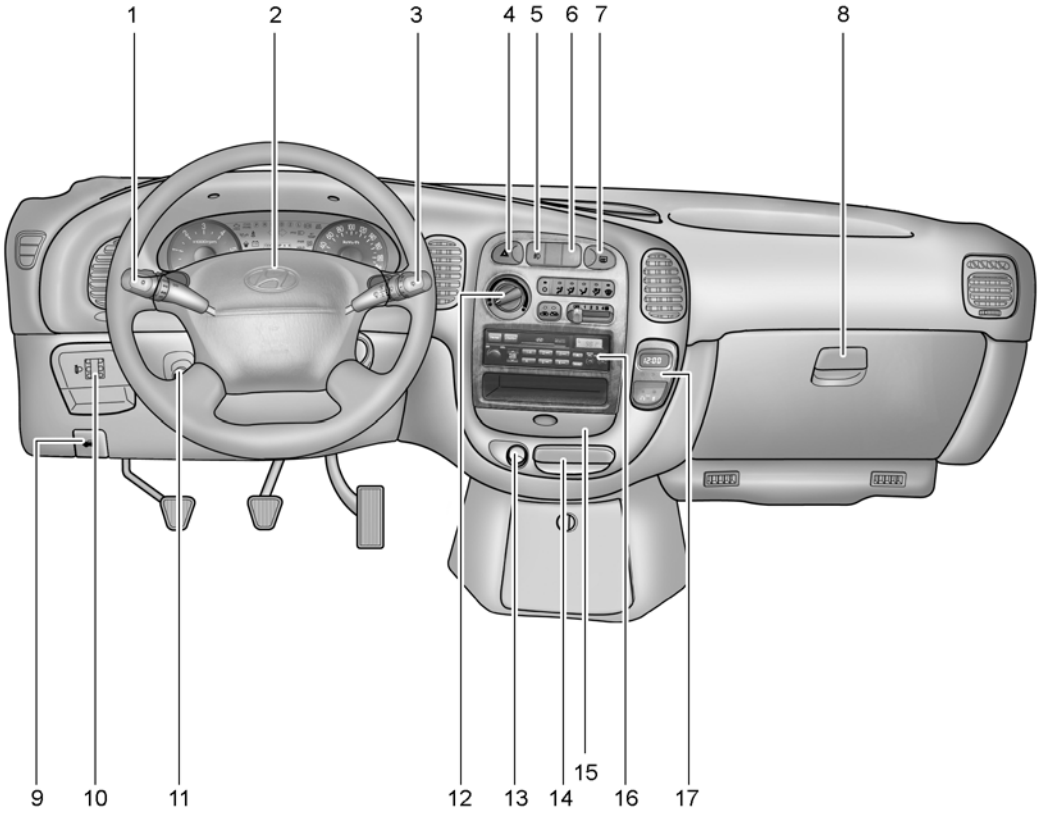

C020A02P-2

1. Multi-function light switch
2. Horn/Driver's side airbag (If installed)
3. Windshield wiper/Washer switch
4. Hazard warning switch
5. Front fog light switch (If installed)
6. Rear fog light switch (If installed)
7. Outside rearview mirror heater switch (If installed)
8. Glove box
9. Hood release lever
10. Headlight leveling device switch (If installed)
11. Engine RPM Adjustment Knob
12. Heater/Air conditioner control panel
13. Cigarette lighter
14. Ashtray
15. Drink holder
16. Audio system (If installed)
17. Digital clock (If installed)

CAUTION:

When installing the container of liquid air refresher inside a vehicle, do not place it near the instrument cluster nor on the crash pad surface. If there is any leakage from the air refresher onto these areas (Instrument cluster, crash pad or air ventilator), it may damage these parts. If the liquid from air refresher does leak onto these areas, wash them with water immediately.

B255A01P-GAT

INDICATOR SYMBOLS ON THE INSTRUMENT CLUSTER

SRS (Airbag) Service Reminder Indicator Light (SRI) (If installed)

ABS Service Reminder Indicator Light (If installed)

O/D OFF Indicator Light (Automatic Transmission Only)

Turn Signal Indicator Lights

High Beam Indicator Light

Low Oil Pressure Warning Light

Parking Brake/Low Brake Fluid Level Warning Light

Charging System Warning Light

Seat Belt Warning Light (If installed)

Door Ajar Warning Light

Low Fuel Level Warning Light

POWER/HOLD Indicator Light (If installed)

Malfunction Indicator Light (If installed)

4WD HIGH/LOW Indicator Light (If installed)

Immobilizer Warning Light (If installed)

Diesel Pre-heat Indicator Light (Diesel only)

Fuel Filter Warning Light (Diesel only)

* More detailed explanations of these items will be found beginning on page 2-8.

BEFORE DRIVING YOUR VEHICLE

Fuel Recommendations 1-2
Before Driving Your Vehicle Safety Checks 1-3
Running-in Recommendations 1-3
Vehicle Identification Number (VIN) 1-5
Keys 1-7
Immobilizer System 1-7
Illuminated Ignition Switch 1-12
Door 1-13
Hold Open Lock System 1-14
Central Door Locks 1-15
Theft-alarm System 1-16
Tail Gate/Rear Gate/Side Gate 1-21
Hood Release 1-25
Remote Fuel-filler Lid Release 1-26
Window 1-28
Seats 1-30
Seat Belts 1-42
Child Restraint System 1-46
Steering Wheel Tilt Lever 1-50
Supplemental Restraint (Airbag) System 1-51

FUEL RECOMMENDATIONS

B010A01CM-GAT

Use Unleaded Gasoline

For Europe – For the optimal vehicle performance, we recommend you to use unleaded gasoline with an octane rating of RON (Research Octane Number) 95 /AKI (Anti Knock Index) 91 or higher.
You may use unleaded gasoline with an octane rating of RON 91~94/AKI 87~90 but it may result in slight performance reduction of the vehicle.

Except Europe – Unleaded gasoline with a Pump Octane Rating of 87 (Research Octane Number 91) or higher must be used in Hyundai vehicle.

If leaded gasoline is used, it will cause the catalytic converter to become ineffective and the emission control system to malfunction.
This can also result in increased maintenance expense. To avoid accidental use of leaded fuel, the large nozzle used with leaded gasoline at service stations can not be inserted into fuel tank opening of Hyundai vehicle.

NOTE:

- **For some countries, Hyundai vehicles are designed to use leaded gasoline. When you are going to use leaded gasoline, ask to Hyundai dealer whether leaded gasoline in your vehicle is available or not.**
- **Octane rating of leaded gasoline is same with unleaded one.**

Use Diesel

Diesel fuel of 52 to 54 cetane is used in Hyundai vehicle. If two types of diesel fuel are available, use summer or winter fuel properly according to the following temperature conditions.

- Above -5°C (23°F) ... Summer type diesel fuel.
- Below -5°C (23°F) ... Winter type diesel fuel.

Watch the fuel level in the tank very carefully : If the engine stops through fuel failure, the circuits must be completely purged to permit restarting.

CAUTION:

Do not let any gasoline or water enter the tank. This would make it necessary to drain it out and to bleed the lines to avoid jamming the injection pump and damaging the engine.

BEFORE DRIVING YOUR VEHICLE SAFETY CHECKS

B010A01P-GAT

Be sure you know your vehicle and its equipment and how to use it safely.

B010B01P-GAT

Before entering the vehicle

- o Check that windows, mirrors and lights are clean.
- o Check if any tire is low or flat.
- o Look for fluid leaks.
- o Check that area is clear if you're about to back up.

B010C03P-GAT

After entering the vehicle

- o Lock all doors.
- o The driver and passengers are wearing properly adjusted seat belts.
- o The head restraints are properly adjusted, if so equipped.
- o Adjust inside and outside mirrors.
- o Check warning lights for correct operation, with the ignition key in the position "ON".
- o Check all gauges, for normal operation.

WARNING: (Diesel only)
To ensure that sufficient vacuum exists within the brake system during cold weather start-up conditions, it is necessary to run the engine at idle after starting the engine.

NOTE:
Fluid levels, such as engine oil, engine coolant, brake fluid, and windshield washer fluid, should be checked daily and/or weekly, or whenever you refuel.
Further details are described in the "CONSUMER INFORMATION" section.

RUNNING-IN RECOMMENDATIONS

B020A01P-GAT

During the running-in period for the first 1,000km(600miles), it is advisable to drive your new vehicle using the following precautions as a guideline to aid long life as well as future economy and performance.

1. Do not race the engine at high speeds.
2. Avoid rapid starting, acceleration, braking and prolonged high-speed running.
3. Keep to the running-in speed limit shown below.

Please note that the legal speed limits displayed must be adhered to.

km/h (mph)

Drive range	Running-in speed
1st	0~25(0~16)
2nd	20~50(13~31)
3rd	30~80(19~50)
4th	40~(25~)
5th	50~(32~)

4. Do not exceed loading limits.
5. Refrain from towing a trailer.

B030A01P-GAT

BEFORE OPERATION PRECAUTIONS FOR NEW VEHICLE

The performance and life of a vehicle depend largely on how the vehicle is handled when new.
To maintain the parts smoothly and sustain high performance for a long time to come, be sure to observe the following points.

Make sure that your vehicle does not miss the first 5,000 km inspections.

After the first 5,000 km of driving, take your vehicle to your nearest service shop for inspection.

B040A01P-GAT

OPERATION IN FOREIGN COUNTRIES

If you are going to drive your Hyundai in another country, be sure to:

- o Observe all regulations regarding registration and insurance.
- o Determine that acceptable fuel is available.

B055A02P-GAT

LOADING YOUR VEHICLE

Never load the luggage and people to exceed GVWR(MLW) and GAWR of your vehicle.
You can find the GVWR(MLW) and GAWR -maximum loading capacities- on the VIN plate.
The GVWR(Gross Vehicle Weight Rating) or MLW(Maximum Loaded Weight) means total weight of the vehicle, all occupants, fuel and cargo. And GAWR means the maximum weights that the front and rear axles can endure the weights including vehicle itself weight.

WARNING:
Improperly loading your car can seriously affect its steering and braking performance causing a crash in which you may be seriously injured or killed.

NOTE:
Your warranty does not cover parts or components that fail because of overloading.

B070A01P-GAT

MAINTENANCE

It is necessary to maintain your vehicle in top operating condition in order to enjoy safe and pleasant driving.
Some maintenance items can be done by the owner (Consumer information), while others should be done only by an authorized dealer (periodic inspection and maintenance).
For the maintenance items to be done by the owner, prepare the appropriate materials and tools and follow the procedures given in the "Consumer information" section of this manual.
However, the periodic inspection and maintenance should not be attempted by the owner, but should be done by an authorized HYUNDAI dealer.
Correct performance of the periodic inspection and maintenance items requires specialized knowledge and equipment.
Having these items performed by an authorized HYUNDAI dealer with the latest technology and equipment will ensure that your vehicle is maintained for optimum performance, economy, and safety.

In addition, having all periodic inspection and maintenance done by an authorized HYUNDAI dealer is a prerequisite for validity of the warranty on your vehicle in the event of a claim.
Refer to the separate "Service Booklet" for the periodic inspection and maintenance items and intervals.

B080A01P-GAT

INSTALLATION OF ACCESSORIES

Consult an authorized HYUNDAI dealer when installing accessories.

- o Installation of some accessories may be restricted by regulations.
- o Improper installation of electrical parts could cause fire.
- o Never use tires or wheels which do not meet specifications.
  For wheel and tire sizes, refer to the "CONSUMER INFORMATION" section of this manual.

VEHICLE IDENTIFICATION NUMBER (VIN)

B050A02P-GAT

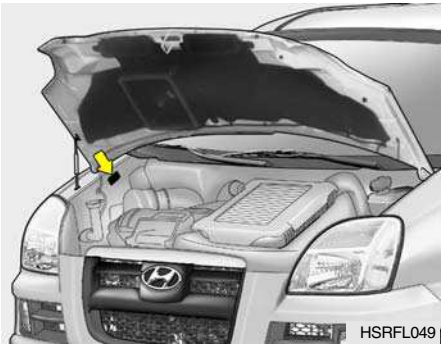

The vehicle identification plate is attached on the fender inner panel as shown in the illustration. The vehicle identification number (VIN) is the number used in registering your car and in all legal matters pertaining to its ownership, etc.

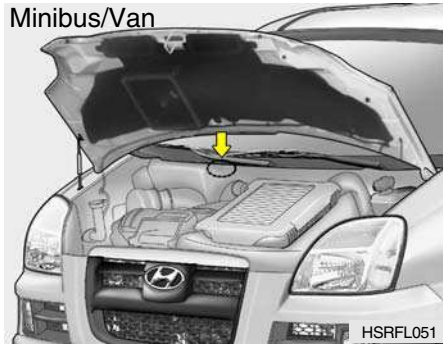

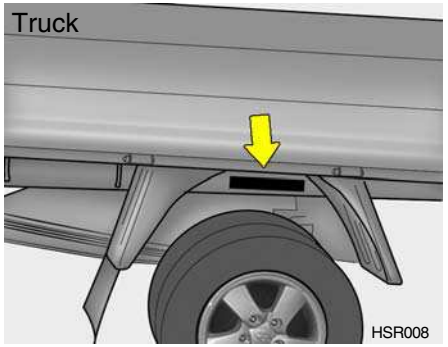

The vehicle identification number is stamped as shown in the illustration. Please use this number when ordering replacement parts.

B060A01P-GAT

ENGINE NUMBER

Diesel Engine

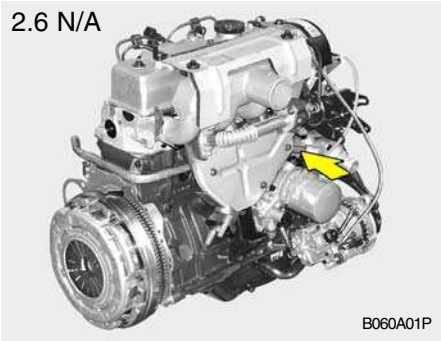

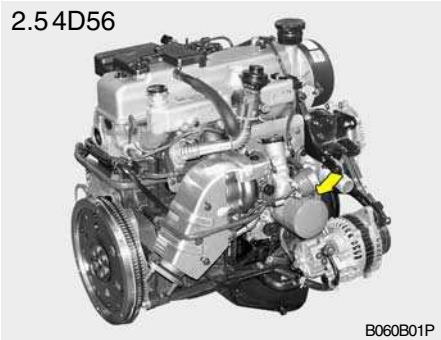

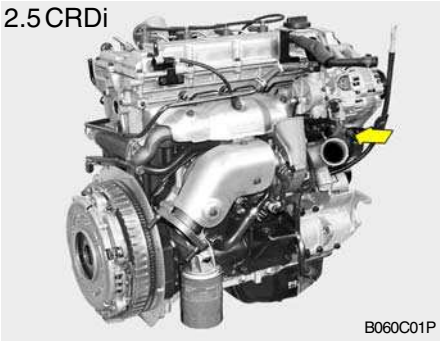

Gasoline Engine

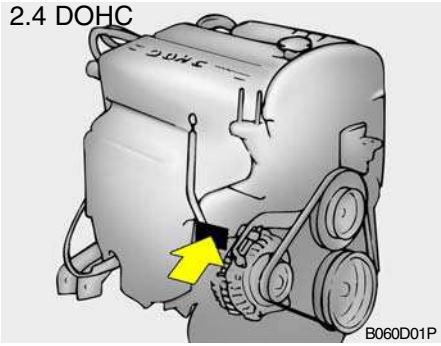

The engine number is stamped on the engine cylinder block as shown in the illustration.

KEYS

B030A01A-AAT

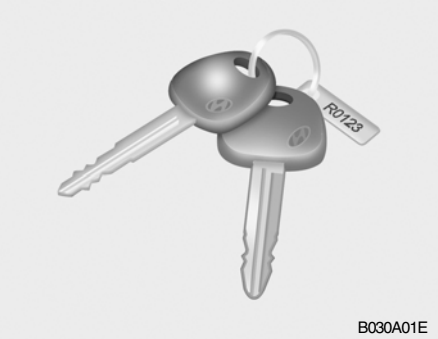

For greater convenience, the same key operates all the locks in your Hyundai. However, because the doors can be locked without a key, carrying a spare key is recommended in case you accidentally lock one key inside the car.

B030B01A-AAT

Record Your Key Number

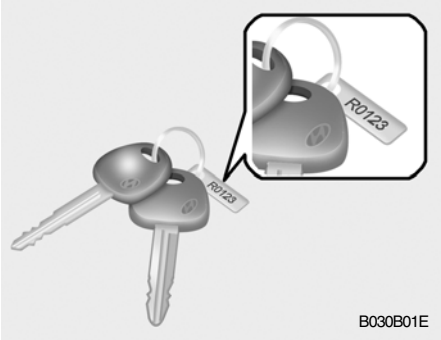

A code number is stamped on the number plate that came with the keys to your Hyundai. This key number plate should not be left with the keys but kept in a safe place, not in the vehicle. The key number should also be recorded in a place where it can be found in an emergency.

If you need additional keys, or if you should lose your keys, your authorized Hyundai dealer can make new keys if you can supply the key number.

IMMOBILIZER SYSTEM

B880A01P-GAT

(Minibus/Van) (If installed)

The immobilizer system is an anti-theft device, designed to prevent and deter automobile theft.

B880B02P-GAT

Keys

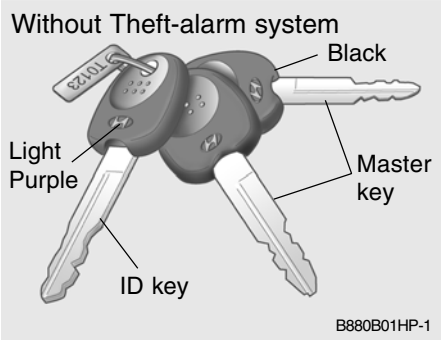

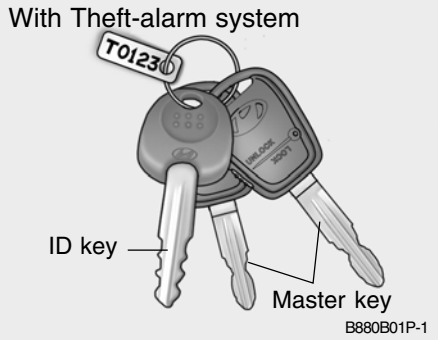

All of the locks fitted to the vehicle are operated by the same key. However, since it is possible to lock the doors without the use of the key, care should be exercised to ensure that the key does not become locked inside the vehicle by mistake.
For greater convenience, your Hyundai has two types of keys as shown in the illustration.

ID key

This key must be used first to register a unique ID code in the ICU. This ID code is then recorded onto the master keys. Both sides of the key has a Hyundai logo.

Master key

This key is for general use. It will open all locks on your vehicle.
One side of the key has the Hyundai logo and the other side has the "M" symbol.
If your vehicle is equipped with Theft-alarm system, the master keys with the function of transmitter will be provided. (E.C only)

NOTE:

If you make your own duplicate key, you will not be able to cancel the system or start the engine.

CAUTION:

Don't lose your ID key or forget the password. Always keep your ID key in a place where you remember and record your password. If you don't have both the password and ID key, consult your authorized Hyundai dealer.

B880C01A-GAT

Key Numbers

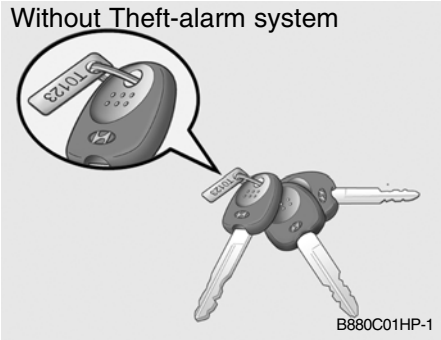

The vehicle key number is recorded on a metal tag attached to the keys when the vehicle is first delivered to you.

The key number should be recorded and kept in a safe place in case the need to order further keys arise. New keys are available from any Hyundai dealer by quoting the relevant key number.
In the interest of security, the metal tag attached to the keys which bears the key number should be removed from the key ring after delivery. In addition, key numbers cannot be provided by Hyundai for security reasons.
If you need additional keys or if you should lose your keys, your authorized Hyundai dealer can make new keys if you can supply the key number and ID key.

B880D02E-GAT

Limp home procedures

In case the immobilizer system is out of order, you cannot start the engine without the limp home procedures with ignition key.
The following procedure is how to start the engine with the function of the limp home. (0, 1, 2, 3 as a sample password).

NOTE:

You can get the limp home password when the vehicle is first delivered to you. If you do not have the password, consult your authorized Hyundai dealer.

1. To set the password, you may turn the ignition key "ON" and then turn it "OFF" according to the digit numbers. For example, turn the ignition key once for digit number "1", and twice for "2", and so on. However, for the digit number "0", you must turn the ignition key for 10 times.
2. Wait for 3~10 seconds.
3. You may set the remaining number of digits by following the same procedures 1 and 2.
4. If all of four digits have been tried successfully, from this time, you have to start your engine within 30 seconds. If you start your engine after 30 seconds, your engine will not start.

NOTE:

If the engine dies while driving after limp home procedure, you can start your engine within 8 seconds in condition of ignition OFF without limp home procedure again.

After doing the limp home procedure, you have to consult with your authorized Hyundai dealer as soon as possible.

CAUTION:
If you cannot start your engine in spite of limp home procedure, have your vehicle towed by an authorized Hyundai dealer.

B885A01O-GAT
IMMOBILIZER SYSTEM (Truck) (If Installed)

The immobilizer system is an anti-theft device, designed to deter automobile theft.

B885B02P-GAT
Keys

Without Theft-alarm system

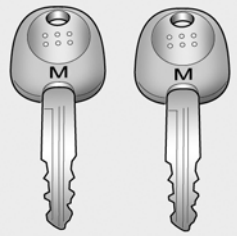

B880B01O-1

With Theft-alarm system

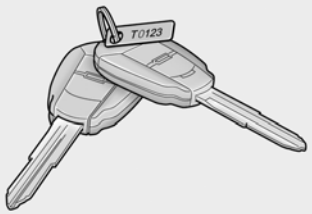

B880B02P-1

All of the locks fitted to the vehicle are operated by the same key. However, since it is possible to lock the doors without the use of the key, care should be exercised to ensure that the key does not become locked inside the vehicle by mistake.
If your vehicle is equipped with Theft-alarm system, the master keys with the function of transmitter will be provided. (E.C only)

NOTE:
If you make your own duplicate key, you will not be able to cancel the system or start the engine.

CAUTION:
- **The password should be recorded and kept in a safe place in case the need to order further keys arises.**
- **If you forget the password, consult your authorized Hyundai dealer.**
- **When starting the engine, do not use the key with other immobilizer keys around. Otherwise the engine may not start or may stop soon after it starts.**
  Keep each keys separately not to have any malfunction after you receive your new vehicle.

B885C02A-GAT

Key Numbers

Without Theft-alarm system

B885C01B-1

With Theft-alarm system

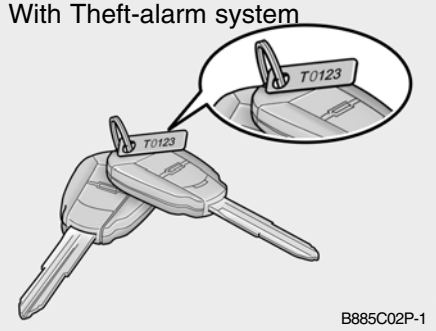

B885C02P-1

The vehicle key number is recorded upon a metal tag attached to the keys when the vehicle is first delivered to you.

The key number should be recorded and kept in a safe place in case the need to order further keys arises. New keys are available from any Hyundai dealer by quoting the relevant key number.

In the interest of security, the metal tag attached to the keys which bears the key number should be removed from the key ring after you receive your new vehicle. In addition, key numbers cannot be provided by Hyundai for security reasons.

If you need additional keys or if you should lose your keys, your authorized Hyundai dealer can make new keys.

B880D02A-GAT

Limp home procedures

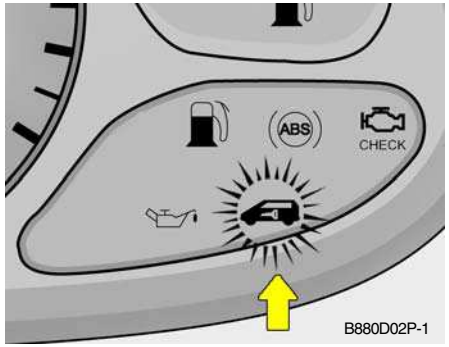

B880D02P-1

In case the immobilizer warning indicator blinks for five seconds when the ignition key is turned to "ON" position, this indicates that the immobilizer system is out of order. And you cannot start the engine without the limp home procedures with ignition key.

The following procedure is how to start the engine with the function of the limp home. (0, 1, 2, 3 as a sample password).

NOTE:
You can get the limp home password when the vehicle is first delivered to you. If you do not have the password, consult your authorized Hyundai dealer.

1. To set the password you may turn the ignition key "ON" and then turn it "OFF" according to the digit numbers, then the immobilizer indicator will blink along with the operation of the ignition key. For example, turn the ignition key once for digit number "1", and twice for "2", and so on. However, for the digit number "0", you must turn the ignition key for 10 times.
2. Wait for 3~10 seconds.
3. You may set the remaining number of digits by following the same procedures 1 and 2.
4. If all of four digits have been tried successfully, turn the ignition key "ON" and check that the immobilizer indicator illuminates. From this time, you have to start your engine within 30 seconds. If you start your engine after 30 seconds, your engine will not start.

NOTE:
If the engine dies while driving after limp home procedure, you can start your engine within 8 seconds without limp home procedure again.

5. If the immobilizer indicator blinks for five seconds, you have to try the limp home procedure again from the beginning.

After doing the limp home procedure, you have to consult with your authorized Hyundai dealer as soon as possible.

CAUTION:
- **If you fail to try the limp home procedure with the sequence of three times, you have to wait for about one hour to do the limp home procedure again.**
- **If you cannot start your engine in spite of limp home procedure, have your vehicle towed by an authorized Hyundai dealer.**

ILLUMINATED IGNITION SWITCH

B120A02P-GAT

(If installed)

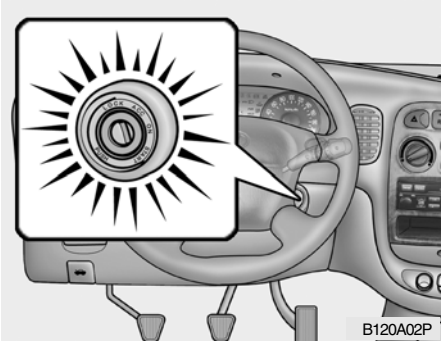

Whenever a front door is opened, the ignition switch will illuminate for your convenience.
The light will go off when the ignition switch is turned on or 10 seconds after closing the door.

DOOR

B040A01A-AAT

DOOR LOCKS

WARNING:

- **Unlocked doors can be dangerous. Before you drive away (especially if there are children in the car), be sure that all the doors are securely closed and locked so that the doors cannot be inadvertently opened from the inside. This helps assure that doors will not be opened accidentally.**
  Also, when combined with the proper use of seat belts, locking the doors helps keep occupants from being ejected from the car in case of an accident.
- **Before opening the door, always look for and avoid oncoming traffic.**

B040B01A-AAT

Locking and Unlocking Front Doors With a Key

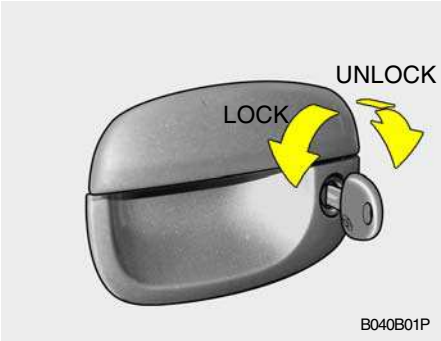

- The door can be locked or unlocked with a key.
- Lock the door by turning the key toward the front of the vehicle and unlock it by turning the key toward the rear.

B130B01P-GAT

To lock the front doors without a key

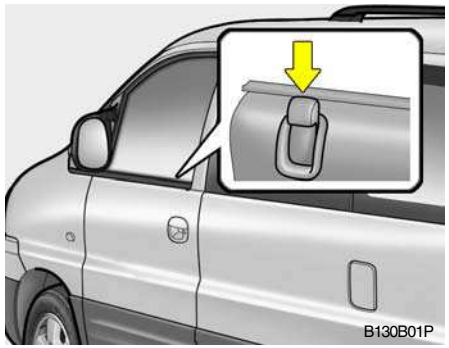

Set the inside lock button to the locked position, and close the door.
Be careful not to lock the doors while the key is inside the vehicle.

B130C01P-GAT

To lock the slide door without a key

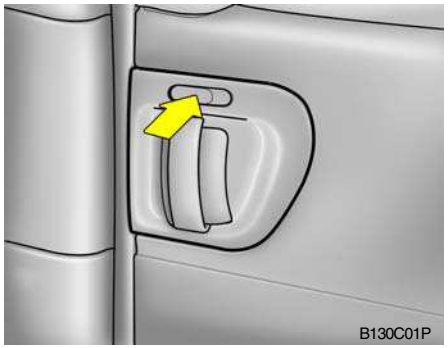

Set the inside lock button to the locked position, and close the door.

B140A01P-GAT

HOLD OPEN LOCK SYSTEM (Minibus/Van)

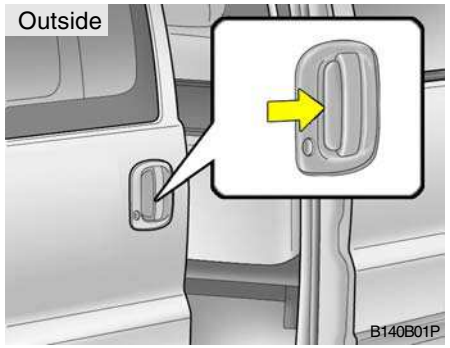

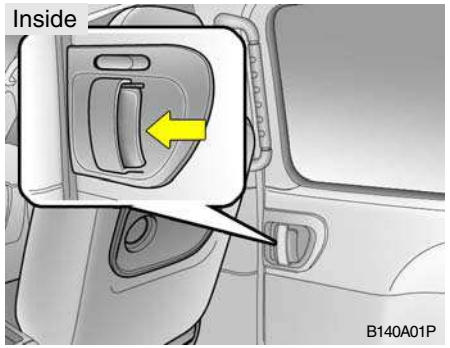

To prevent accidental closing of sliding door in slope, the sliding door should be always fully opened.
When the sliding door is open fully, it is locked in position.
To close the sliding door, pressing the hold open lever, pull the door handle towards the front of the vehicle.

WARNING:

- **Do not open the sliding doors while the vehicle is moving.**
- **If the sliding doors should not be fully closed and locked, this could result in serious injury or death in case of an accident or sudden stop.**

B150A02P-GAT

CENTRAL DOOR LOCKS (Minibus/Van) (If installed)

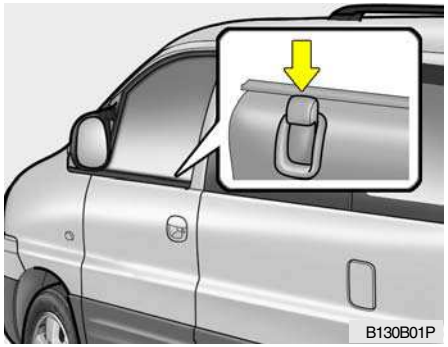

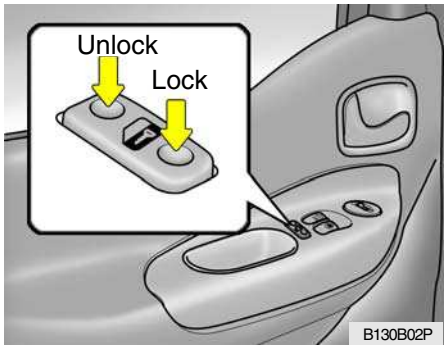

The central door locking system is located on the driver's door lock button. It is operated by depressing the door lock button. If the rear door is open when the button is depressed, the door will remain locked when closed. If the front door is open when the button is depressed, the door will lock when closed.

NOTE:

- **When the front door lock button is depressed, the front and slide doors will lock. When the front door lock button is pulled up, the front and slide doors will unlock. The operation of the tailgate door locking is identical to the central door locking system.**
- **If the door is locked/unlocked multiple times in rapid succession with either the vehicle key or door lock switch, the system may stop operating temporarily in order to protect the circuit and prevent damage to system components.**

B150B01P-GAT

(Truck) (If installed)

The central door locking system is located on the driver's door lock button. It is operated by depressing the door lock button. If the front door is open when the button is depressed, the door will lock when closed.

NOTE:

When the front door lock button is depressed, the front doors will lock. When the front door lock button is pulled up, the front doors will unlock.

B160A02P-GAT

"CHILD-PROTECTION" SLIDE DOOR(Minibus/Van)

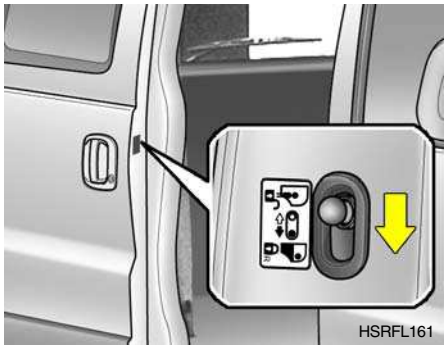

When the slide door is closed with the "child-protection" lever in the " 🔒 " position, it cannot be opened by using the inner handle. Use the outer handle to open the door.
If adults are to sit in the second seat, release the child protection lock. When this is done, the lever will be in the " 🔓 " position.

B160B01P-GAT

CARRYING CHILDREN

- If a child is left in the vehicle alone, always be sure to turn off the ignition and remove the key.
- If a child is seated alone in the second seat, use the child-protection system.

THEFT-ALARM SYSTEM

B070A01P-GAT

(Minibus) (If installed)

This system is designed to provide protection from unauthorized entry into the car. This system is operated in three stages: the first is the "Armed" stage, the second is the "Alarm" stage, and the third is the "Disarmed" stage. If triggered, the system provides an audible alarm with blinking of the turn signal light.

B070B01O-AAT

Armed Stage

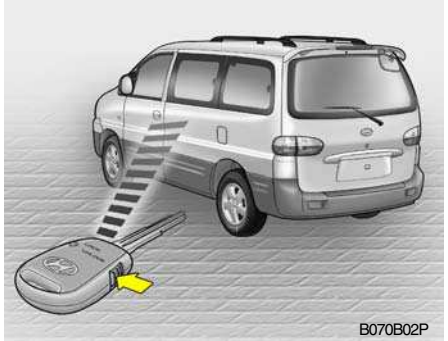

Park the car and stop the engine. Arm the system as described below.

(1) Remove the ignition key from the ignition switch.
(2) Make sure that the engine hood and tail gate are locked.
(3) Lock the doors using the transmitter of the keyless entry system.

After completion of the steps above, the turn signal light will blink once to indicate that the system is armed.

NOTE:

- **If any door, tail gate or engine hood remains open, the system will not be armed.**
- **If this happens, rearm the system as described above.**

CAUTION:

Do not arm the system until all passengers have left the car. If the system is armed while a passenger(s) remains in the car, the alarm may be activated when the remaining passenger(s) leaves the car.

B070C01FC-GAT

Alarm Stage

The alarm will be activated if any of the following occurs while the car is parked and the system is armed.

(1) A front or rear door is opened without using the transmitter.
(2) The tail gate is opened without using the transmitter.
(3) The engine hood is opened.

The alarming horn will sound and the turn signal light will blink continuously for 27 seconds (E.C only/ Except E.C 3 times). To turn off the system, unlock the door or tail gate with the transmitter.

CAUTION:
Avoid trying to start the engine while the system is armed.

B070D03P-AAT

Disarmed Stage

The system will be disarmed when the driver's or passenger's door is unlocked by depressing the button on the transmitter after the system was armed.

After completion of the step above, the turn signal lights will blink twice to indicate that the system is disarmed.

NOTE:

- **Once the system has been disarmed, it can not be rearmed except by repeating the arming procedures.**
- **When the system is disarmed with the interior light switched to "DR", the interior light will illuminate for 30 seconds.**

CAUTION:
Only the transmitter can disarm the armed stage. If the transmitter does not disarm the system, it is necessary to take the following steps;

1. **Unlock the door with the key, which will cause, the alarm to be activated.**
2. **Insert the key in the ignition key cylinder and turn the ignition key to "ON" position.**
3. **Wait for 30 seconds.**

After completing the steps above, the system will be disarmed.

B070F03A-GAT

Keyless Entry System (If installed)

Locking doors

1. Close all doors.
2. Push the button on the transmitter.
3. At the same time all doors lock, the turn signal lights will blink once to indicate that the system is armed.

Unlocking doors

1. Push the button on the transmitter once more after all doors were locked.
2. At the same time all doors unlock, the turn signal lights will blink twice to indicate that the system is disarmed.

NOTE:

- **The transmitter will not work if any of following occur:**
  - **The ignition key is in ignition switch.**
  - **You exceed the operating distance limit (10 m).**
  - **The battery in the transmitter is weak.**
  - **Other vehicles or objects may be blocking the signal.**
  - **The weather is extremely cold.**
  - **The transmitter is close to a radio transmitter such as a radio station or an airport which can interfere with normal operation of the transmitter.**

  When the transmitter does not work correctly, open and close the door with the ignition key. If you have a problem with the transmitter, contact an authorized Hyundai Dealer.
- **Keep the transmitter away from water or any liquid. If the keyless entry system is inoperative due to exposure to water or liquids, it will not be covered by your manufacturer vehicle warranty.**

B070E02P-AAT

Replacing the battery

When the transmitter's battery becomes weak, it may take several pushes on the button to lock or unlock the doors, and the LED will not light. Replace the battery as soon as possible.

Battery type : CR1220 (Minibus/Van)
CR2032 (Truck)

Replacement instructions: (Minibus/Van)

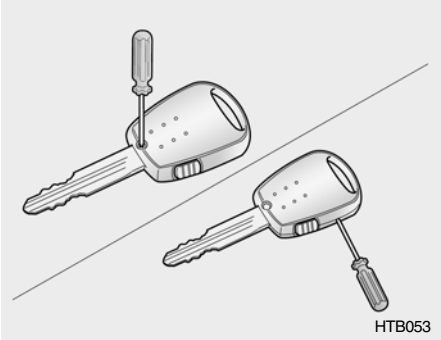

1. Remove the screw with a phillips screwdriver.
2. Carefully separate the case with a flat-head screwdriver as shown in the illustration.

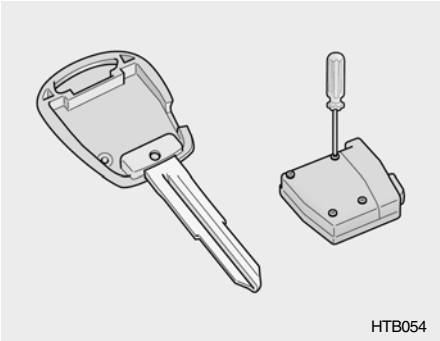

3. Remove four screws at the back side of the built-in circuit.

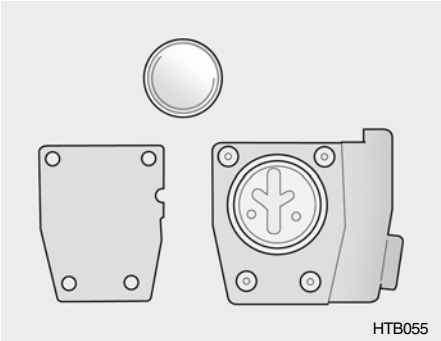

4. Remove the old battery from the case and note the polarity. Make sure the polarity of the new battery is the same (+side facing up), then insert it in the transmitter.

(Truck)

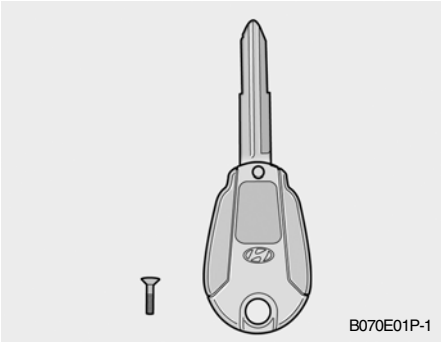

1. Separate the case with a phillips screwdriver.

TAIL GATE

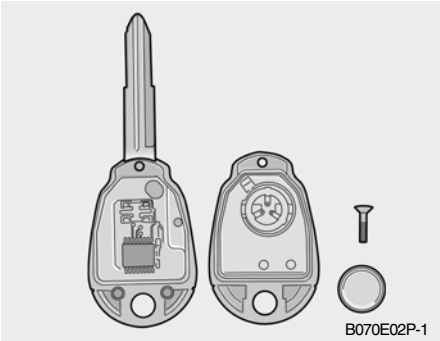

2. Remove the old battery from the case and note the polarity. Make sure the polarity of the new battery is the same(+side facing down), then insert it in the transmitter.

B190A01P-GAT

LIFT TYPE
Operation from outside the vehicle (Minibus/Van)

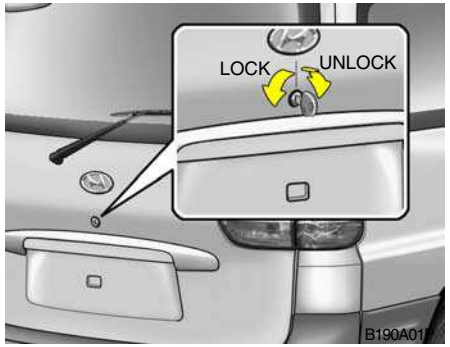

Pull the outside handle toward you to open the tail gate.

B190B02P-GAT

Operation from inside the vehicle (Van)

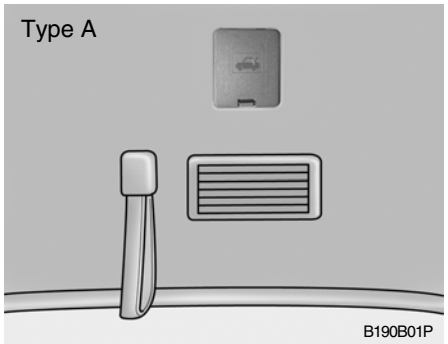

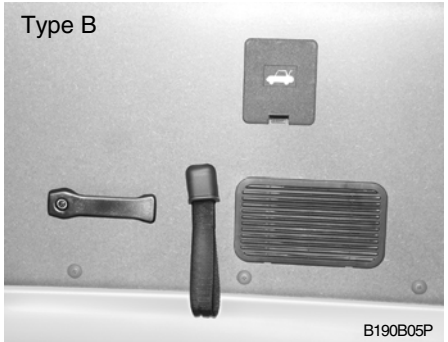

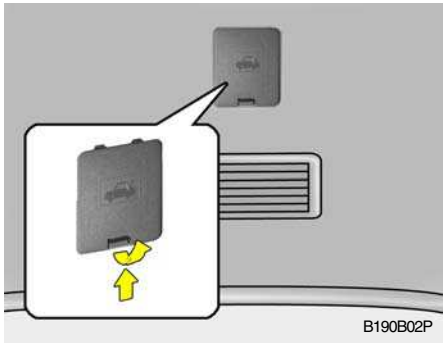

1. When the tail gate is unlocked, pull the tail gate open cover.

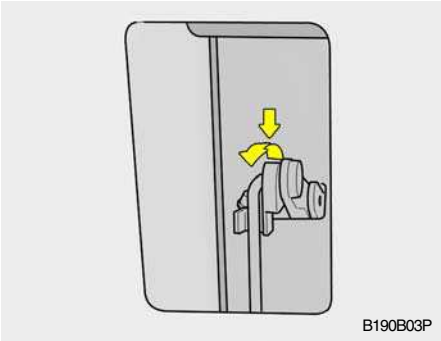

2. Insert the finger into the tail gate opening hole, and press down the outside handle rod to open the tail gate.

When the tail gate is locked

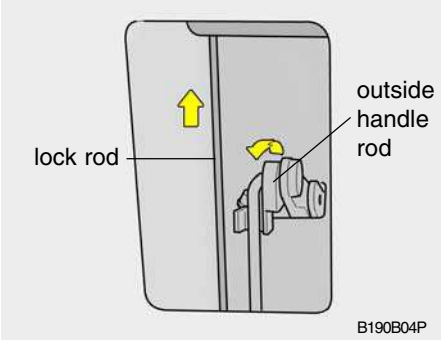

1. Pull the tail gate open cover.
2. Insert the finger into the tail gate opening hole, and pull upward the lock rod (thin rod), and press down the outside handle rod (thick rod) to open the tailgate.

B190C01P-GAT

TWIN SWING DOOR TYPE (Van)

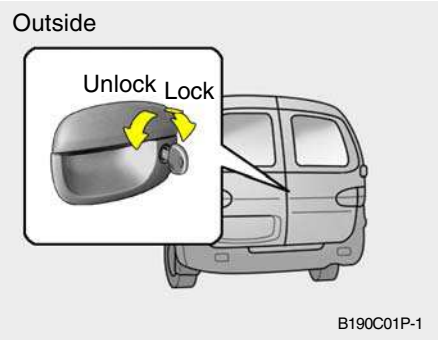

To open from outside, lift the door handle up.

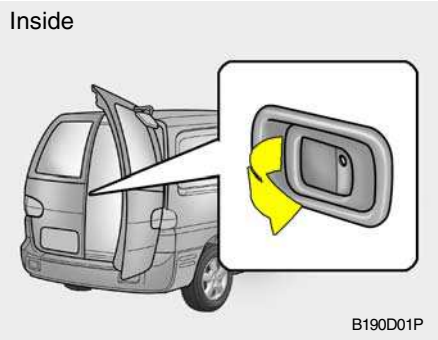

To open from inside, pull the inside door handle.

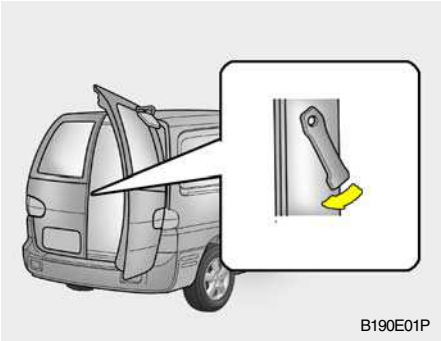

When opening the left door, pull the lever toward your side.

B191A01P-GAT

To open the rear gate (Truck)

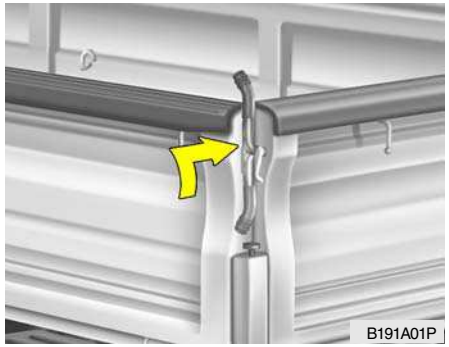

1. Push the rear gate handle inside and pull it toward you.

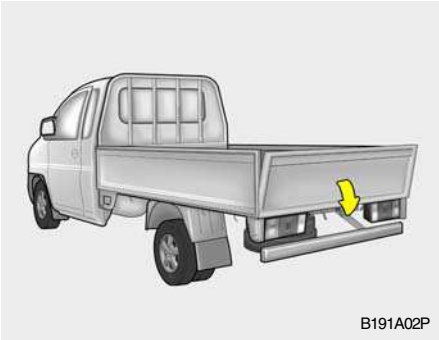

2. Lower the rear gate slowly.

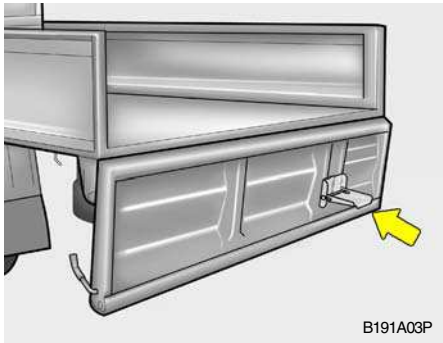

NOTE:
When you step on the cargo deck, use the foothold.

WARNING:
When the rear combination lamps are hidden, other road users should be warned by means of warning triangle or other devices.

To close the rear gate

Lift the rear gate up and lock the rear gate handle in place.

SIDE GATE

B191B01P-GAT

To open the side gate (Truck)

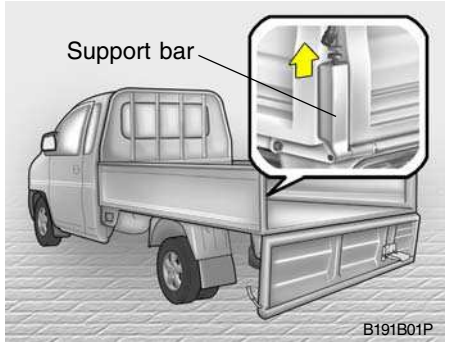

1. With the rear gate opened, pull up the knob to release the support bar down.
2. Remove the side gate handle from the hook after pulling it up.
3. Lower the side gates slowly.

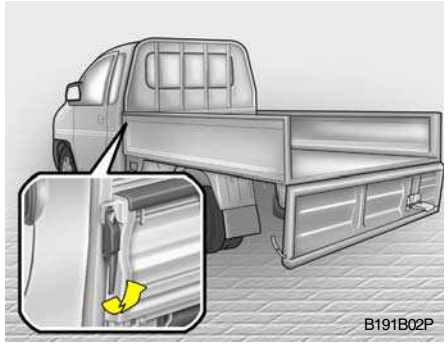

To close the side gate

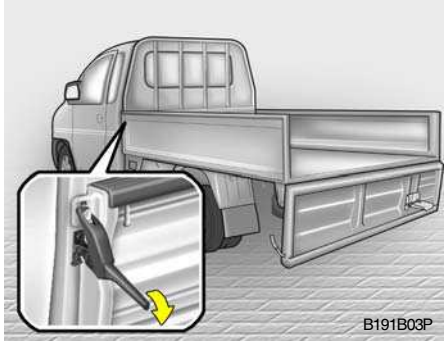

1. Lift the side gate up and lock the side gate handle in place.

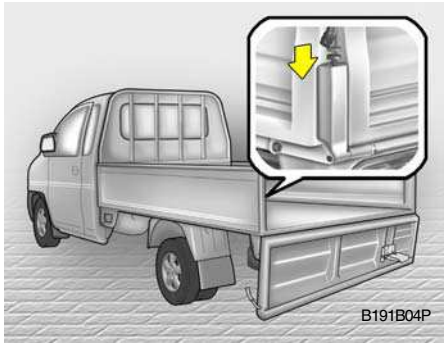

2. Push the knob down to lock the side gates.

HOOD RELEASE

B570A01F-GAT

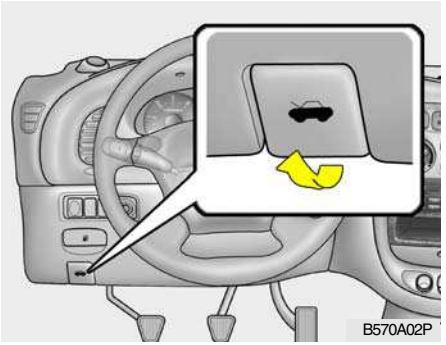

1. Pull the release knob to unlatch the hood.

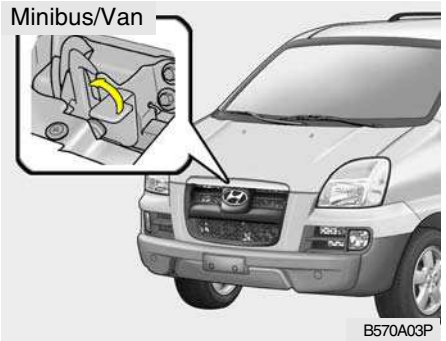

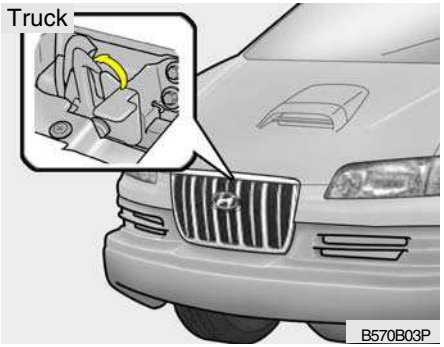

2. Press the secondary latch lever up side and lift the hood.
3. Hold the hood open with the support rod.

Before closing the hood, return the support rod to its clip to prevent it from rattling. Lower the hood until it is about 30 cm (1 ft.) above the closed position and let it drop. Make sure that it locks into place.

CAUTION:
Make sure that the support rod has been released prior to closing the hood.

WARNING:

- **Always double check to be sure that the hood is firmly latched before driving away. If it is not latched, the hood could fly open while the vehicle is being driven, causing a total loss of visibility, which might result in an accident.**
- **The support rod must be inserted completely into the hole provided in the hood whenever you inspect the engine compartment. This will prevent the hood from falling and possibly injuring you.**
- **Do not move the vehicle with the hood in the raised position, as vision is obstructed and the hood could fall or be damaged.**

REMOTE FUEL-FILLER LID RELEASE

B200A01P-GAT

(Minibus/Van)

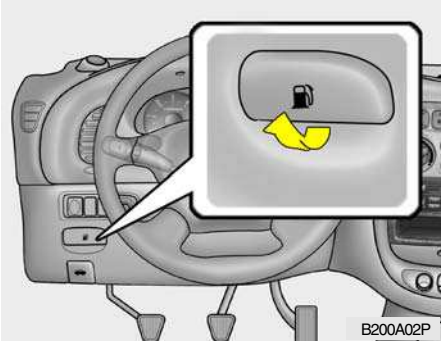

The fuel-filler lid may be opened from inside the vehicle by pulling up on the fuel-filler lid opener located on the dashboard at the left side of the car.

B200C02P-GAT

Fuel tank cap key (Truck)

The fuel tank cap can be opened whenever you fuel-up. You lock the fuel tank cap by turning the key toward the front of the vehicle and unlock it by turning it toward the rear.
The fuel tank cap is located at the left side of the vehicle body.

B200B01P-GAT

Refueling (Minibus/Van)

Use the fuel best suited to the engine of your vehicle. Excessively low cetane fuel may cause ignition pinging and consequently damage engine. Please find the cetane number most appropriate to your engine.

NOTE:
If the fuel-filler lid will not open because ice has formed around it, tap lightly or push on the lid to break the ice and release the lid. Do not pry on the lid. If necessary, spray around the lid with an approved de-icer fluid (do not use radiator anti-freeze) or move the vehicle to a warm place and allow the ice to melt.

WARNING:

o Fuel vapors are dangerous. Before refueling, always stop the engine and never allow sparks or open flames near the filler area. If you need to replace the filler cap, use a genuine Hyundai replacement part.
If you open the fuel filler cap during high ambient temperatures, a slight "pressure sound" may be heard. This is normal and not a cause for concern.
Whenever you open the fuel filler cap, turn it slowly.

o Automotive fuels are flammable/explosive materials. When refueling, please note the following guidelines carefully. Failure to follow these guidelines may result in severe personal injury, severe burns or death by fire or explosion.
- Before refueling always note the location of the Emergency Gasoline Shut-Off, if available, at the gas station facility.
- Before touching the fuel nozzle or fuel filler cap, you should eliminate potentially dangerous static electricity discharge by touching another metal part of the front of the vehicle, a safe distance away from the fuel filler neck, nozzle, or other gas source.
- Do not get back into a vehicle once you have begun refueling. Do not touch, rub or slide against any item or fabric (polyester, satin, nylon, etc.) capable of producing static electricity. Static electricity discharge can ignite fuel vapors resulting in explosion.
If you must re-enter the vehicle, you should once again eliminate potentially dangerous static electricity discharge by touching a metal part of the vehicle, away from the fuel filler neck, nozzle or other gasoline source.
- When using a portable fuel container be sure to place the container on the ground prior to refueling. Static electricity discharge from the container can ignite fuel vapors causing a fire. Once refueling has begun, contact with the vehicle should be maintained until the filling is complete. Use only portable fuel containers designed to carry and store gasoline.
- Do not use cellular phones around a gas station or while refueling any vehicle. Electric current and/or electronic interference from cellular phones can potentially ignite fuel vapors causing a fire. If you must use your cellular phone use it in a place away from the gas station.

- **When refueling always shut the engine off. Sparks produced by electrical components related to the engine can ignite fuel vapors causing a fire. Always insure that the engine is OFF before and during refueling. Once refueling is complete, check to make sure the fuel filler cap and door are securely closed, before starting the engine.**
- **Do not light any fire around a gas station. DO NOT use matches or a lighter and DO NOT SMOKE or leave a lit cigarette in your vehicle while at a gas station especially during refueling. Automotive fuel is highly flammable and can, when ignited, result in explosion by flames.**
- **If a fire breaks out during refueling, leave the vicinity of the vehicle, and immediately contact the manager of the gas station or contact the police and local fire department. Follow any safety instructions they provide.**

WINDOW

B230A01P-GAT

FRONT DOOR WINDOW GLASS
Manual type

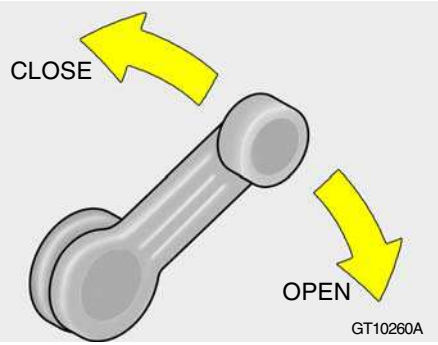

Turn the window regulator handle to raise or lower the window.

WARNING:
When opening or closing the windows, make sure your passenger's arms and hands are safely out of the way.

B250A01P-GAT

POWER WINDOW (If installed)

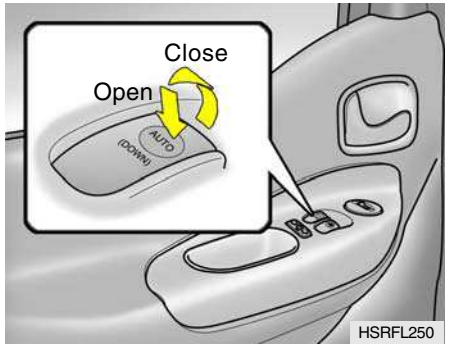

Power window operates when the ignition key is in the "ON" position.
The main switches are located on the driver's armrest and control the front windows on the respective sides of the vehicle.
The windows may be opened by depressing the appropriate window switch.
To stop at the desired opening, release the switch. The window may be closed by pulling the front portion of the switch.

Auto-Down window (Driver's Side)

The Auto-Down window is moved to its fully open position by pushing on the switch, and push on the switch again to stop at the desire position.

CAUTION:
Never try to operate the main switch and sub switch in opposing directions at the same time. If this is done, the window will stop and cannot be opened or closed.

WARNING:
- **Be careful that head or hands and body are not trapped by a closing window.**
- **If passengers remain in the car when you leave, especially if a child remains alone, always remove the ignition key for their safety.**

B210A01P-GAT

REAR SIDE, QUARTER WINDOW Hinged window (Minibus)

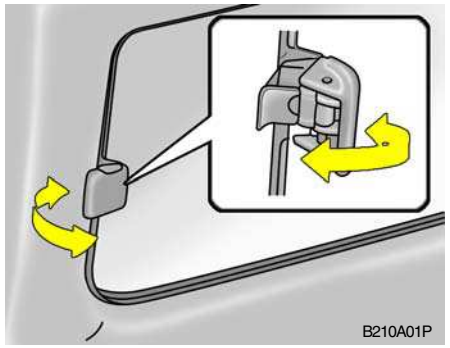

To open

Pull the lever all the way in the direction of the arrow. Press the center of the lever to hold it securely in place.

To close

Pull the center of the lever toward you. When the window is closed, lock the lever securely.

B220A01P-GAT

Sliding window glass (Van)

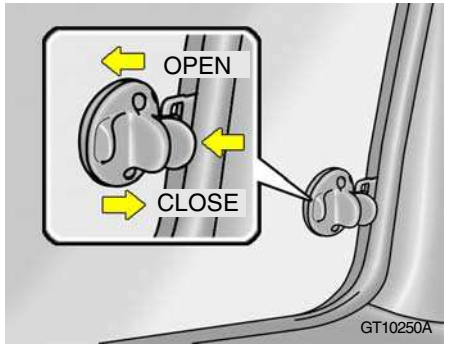

To open

Slide the window glass while pressing the lock knob.

To close

Slide the window glass all the way and it will automatically lock.

For 12 passengers

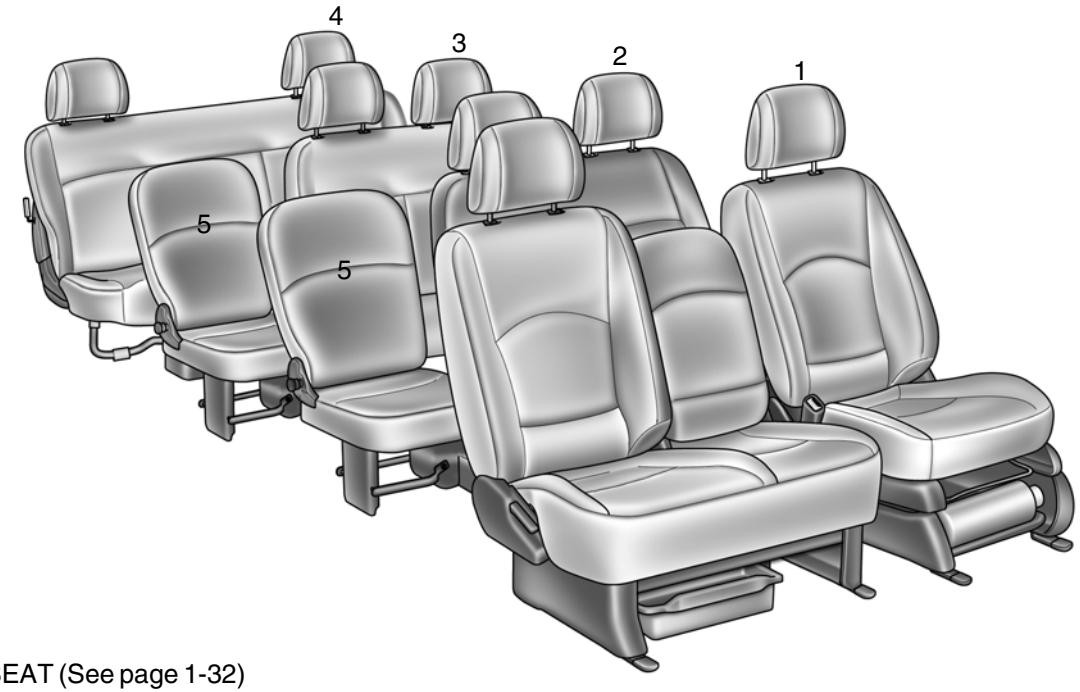

1. FRONT SEAT (See page 1-32)
2. SECOND SEAT (See page 1-34)
3. THIRD SEAT (See page 1-35)
4. FOURTH SEAT (See page 1-37)
5. AUXILIARY SEAT (See page 1-38)

HSRFL859

For 9 passengers (European community)

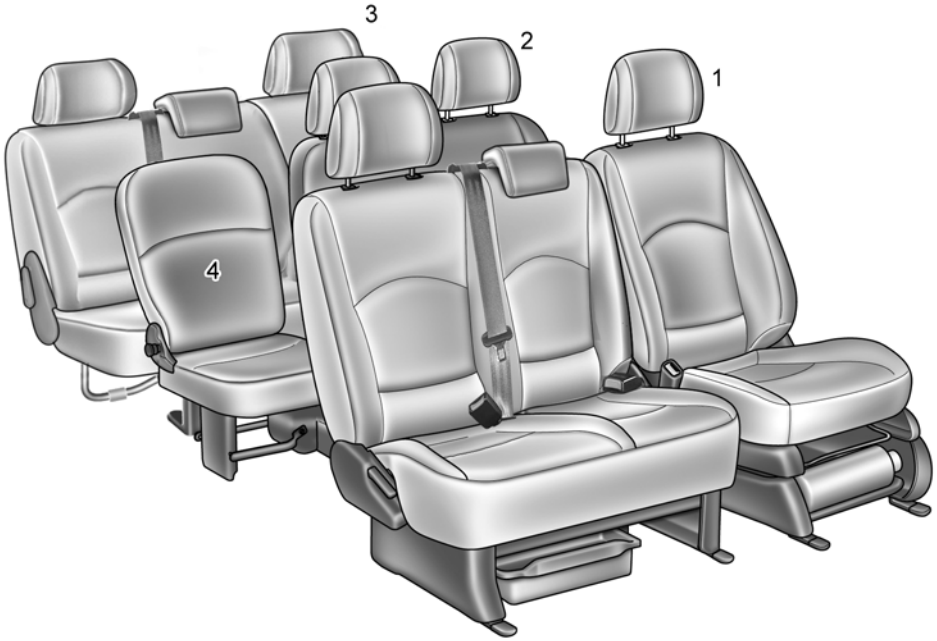

1. FRONT SEAT (See page 1-32)
2. SECOND SEAT (See page 1-34)
3. THIRD SEAT (See page 1-36)
4. AUXILIARY SEAT (See page 1-38)

HSRFL859-2

B080A01A-AAT

ADJUSTABLE FRONT SEATS

WARNING:
Never attempt to adjust the seat while the vehicle is moving. This could result in loss of control, and an accident causing death, serious injury, or property damage.

B080B02FC-AAT

Adjusting Seat Forward and Rearward

To move the seat toward the front or rear, pull the lock release lever upward. This will release the seat on its track so you can move it forward or rearward to the desired position. When you find the position you want, release the lever and slide the seat forward or rearward on its track until it locks into the desired position and cannot be moved further.

WARNING:
To ensure the seat is locked securely, attempt to move the seat forward or rearward without using the lock release lever.

B080C01A-AAT

Adjusting Seatback Angle

To recline the seatback, lean forward to take your weight off it, then pull up on the recliner control lever at the outside edge of the seat. Now lean back until the desired seatback angle is achieved. To lock the seatback into position, release the recliner control lever.

WARNING:
To minimize risk of personal injury in the event of a collision or a sudden stop, both the driver and passenger seatbacks should always be in an upright position while the vehicle is in motion. The protection provided by the seat belts and airbags may be reduced significantly when the seatbacks are reclined. There is greater risk that the driver and passenger will slide under the belt resulting in serious injury if a crash occurs when the seatbacks are reclined. The seat belt cannot provide full protection to an occupant if the seat back is reclined.

B260A01P-GAT

Lumbar Support Control (Driver's Seat Only) (If installed)

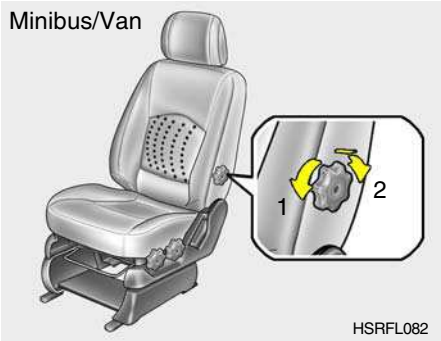

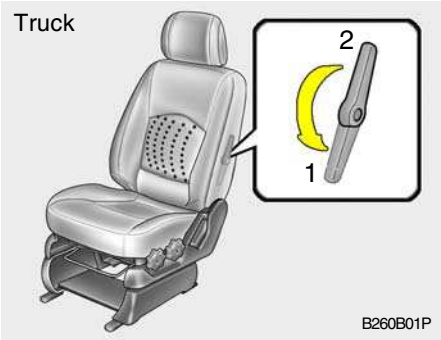

To increase the amount of lumbar support, turn the handle forward. To decrease it turn the handle toward the rear.

1. Maximum support
2. Minimum support

B080F01S-AAT

Seat Cushion Height Adjustment (Driver's Seat Only) (If installed)

To raise or lower the front part of the seat cushion, turn the front knob forward or rearward. To raise or lower the rear part of the seat cushion, turn the rear knob forward or rearward.

B290A01P-GAT

SECOND AND THIRD SEATS

Adjusting Seat Forward and Rearward (Minibus) (If installed)

Pull the lever up and hold it while you slide the seat forward or backward to desired position. Release the lever to lock the seat in position.

B290B02P-GAT

To rotate (Second Seat Only) (If installed)

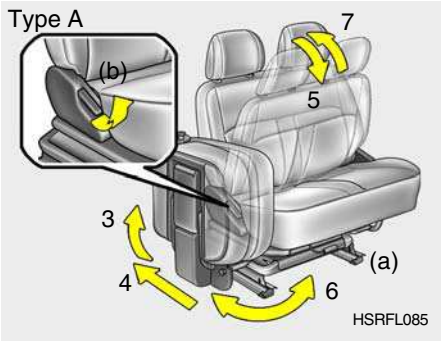

1. Position the driver's seat at the end of forward. And then position the third seat at the end of rearward.
2. Pull the reclining lever and fold the seatback of the front seat.
3. Fold the auxiliary seat.
4. Pull the lever (a) and slide the seat at the end of rearward.
5. Pull the lever (b) and incline the seatback forward.
6. Rotate the seat clockwise.
7. After rotating the seat 90° or 180°, it can be fixed.
8. Adjust the seatback or seat the desired position.
9. Reverse the above procedure to return the seat to the original position.

B290C03P-GAT

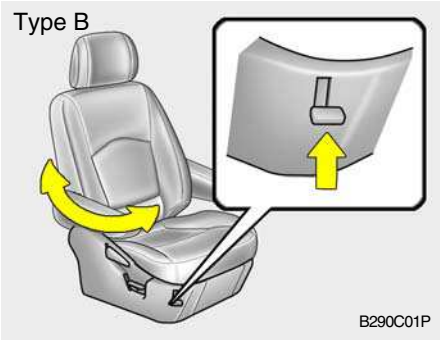

Pull the lever and rotate the seat clockwise.

WARNING:

- **Never rotate the seat while the vehicle is in motion.**
- **When the seat is rotated, be sure that the seat is securely locked in position.**

**o While driving, ensure the seat is locked facing forward.
If the seat is not facing forward, this may result in serious injury in the event of a sudden stop.**

B310A02P-GAT

THIRD SEATS

Folding the third seat (Minibus) (If installed)

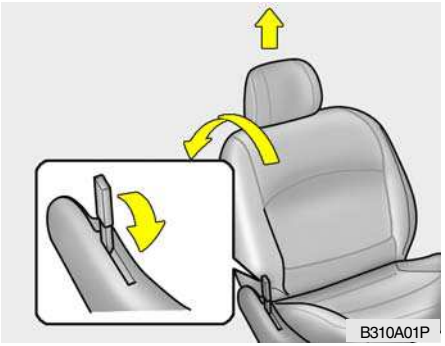

By folding the third seat, larger articles can be stowed in the vehicle.

1. Remove the headrest and tilt the seatback fully backward.

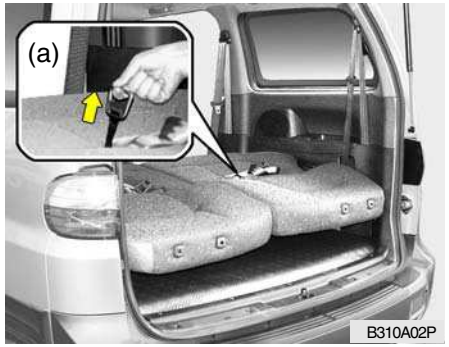

2. Pull the strap (a) for raising and fold the seat sideways.

3. Hook the securing band to the assist handle to secure the seat, and fold the legs of the seat.

4. Fix the headrest at the upper part of the seat leg.
5. Reverse the above procedure when returning the seat to the normal position.

B310B02P-EAT

THIRD SEATS
-European community
Folding the third seats (Minibus)

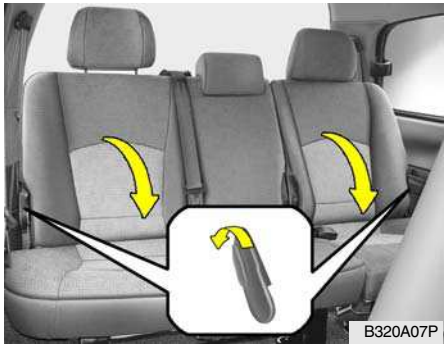

1. Fold the seatback by pushing the lever fully.

NOTE:
Before folding the seatback, put the buckle into pocket not to damage.

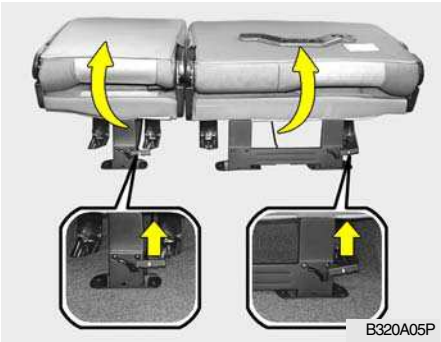

2. Pull up the lever in the direction of the arrow sign and then lift the seat cushion until it is fixed.

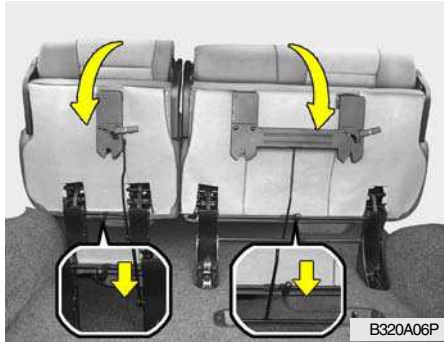

3. To return the seatback and seat cushion to its normal position, lower the seat cushion at the floor by pushing the lever.

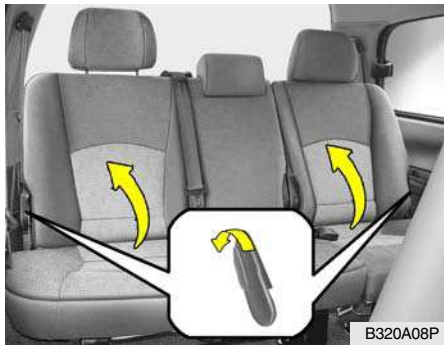

4. Push the lever fully and then return the seatback slowly.

CAUTION

When you return the seatback to its upright position, always be sure it is locked into position by pulling and pushing the top of seatback.

WARNING

- **Be careful not the caught by hand or foot under the seat while adjusting the seat.**
- **Never attempt to adjust the seat while the vehicle is moving. This could result in loss of control, and an accident causing death, serious injury or damage.**

B320A02P-GAT

FOURTH SEAT

Folding the fourth seat (Minibus) (If installed)

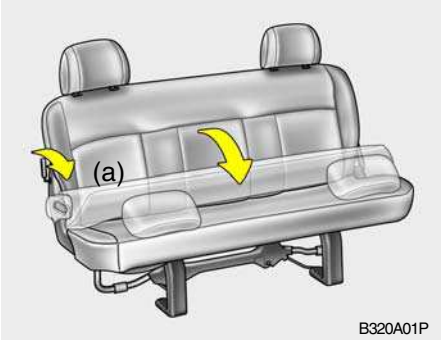

The seatback can be folded down as shown to provide a large cargo space.

1. Push the lever (a) and fold the seatback forward.

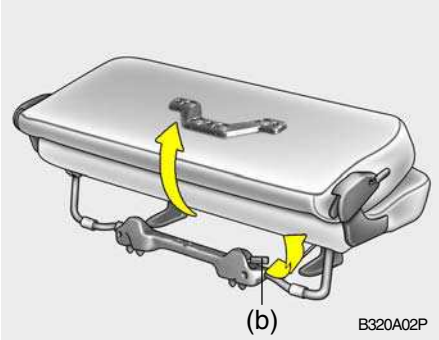

2. Pull the lever (b) and lift the seat cushion until it is fixed.

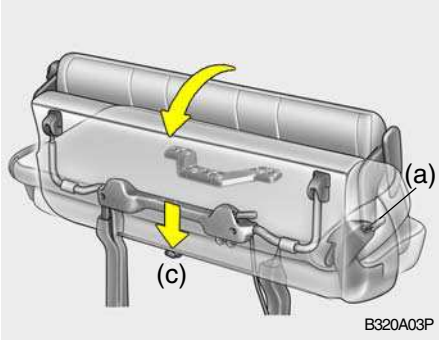

3. To make the seat to the original state, release the lock with pushing the lever (c) and after locking the seat at the floor, push the lever (a) and make the seatback erect.

B340A02P-GAT

AUXILIARY SEAT (If installed)

To fold the auxiliary seat

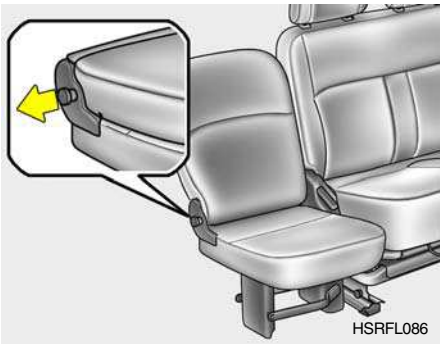

1. Pull the release knob and fold the seatback forward.

2. Fold up the seat.

NOTE:
To recline the auxiliary seatback rearward, pull the lever and recline the seatback rearward to the locking position.

CAUTION:
Avoid full flat condition while driving.

WARNING:
Be careful not to be caught by hand or foot under the seat while fixing the auxiliary seat at the suitable position.

B350A02P-GAT

MAKING A FLAT SEAT (If installed)

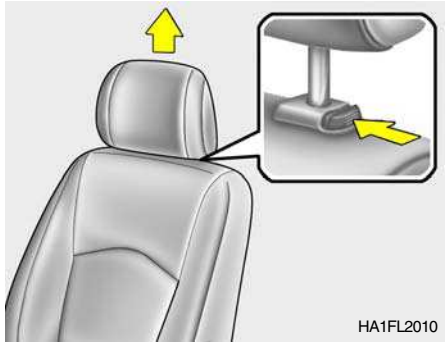

1. Remove the headrests.

2. Position the second seat at the end of forward and then position the third seat at the end of rearward (For 12 passengers).

Type A

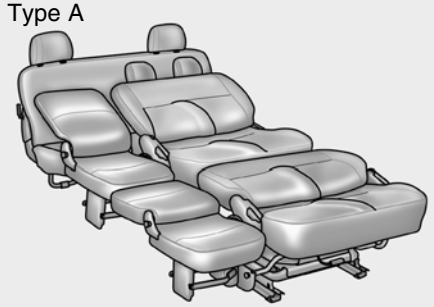

HSRFL088

Type B

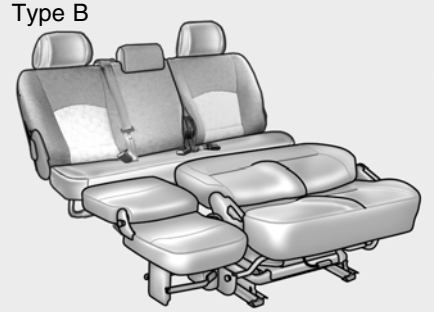

HSRFL088-1

3. Recline the seatback all the way backward to make a flat seat.
4. One large flat seat achieved.

CAUTION:

- **To make a flat seat, stop the vehicle in a safe place.**
- **Do not walk around on top of the seats after they have been laid flat. To avoid loosing your footing, step on the center of the seats and walk slowly.**
- **To ensure the seats are locked securely, attempt to move them back and forth.**
- **Do not jump on, or impact the seatbacks heavily.**
- **Never drive with the luggage or passengers on the flat seat. This is highly dangerous if heavy braking is required.**
- **To raise the seatback, sit on the seat and put a hand on the seatback and raise slowly. Never have a child do this operation, or an unexpected accident may be caused.**

B080D03A-AAT

HEADREST

Adjustable Headrests (If installed)

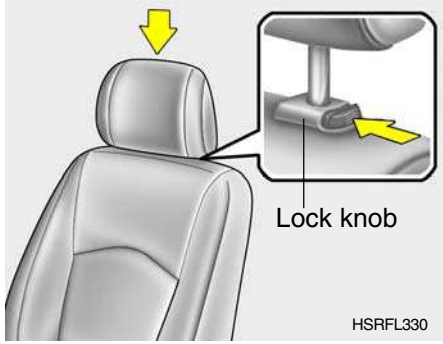

HSRFL330

Headrests are designed to help reduce the risk of neck injuries.
To raise the headrest, pull it up. To lower it, push it down while pressing the lock knob.

WARNING:

- **For maximum effectiveness in case of an accident the headrest should be adjusted so the middle of the headrest is at the same height as the top of the occupant's eyes. For this reason, the use of a cushion that holds the body away from the seatback should not be recommended.**
- **Do not operate vehicle with the headrests removed as injury to the occupants may occur in the event of an accident. Headrests may provide protection against neck injuries when properly adjusted.**
- **Do not adjust the headrest height while the vehicle is in motion.**

B081D01P-GAT

Tilting Forward and Rearward (If installed)

The headrest may be tilted forward to each different position by pulling the headrest forward. To adjust the headrest rearward, pull it fully forward to the farthest position and release it. Adjust the headrest so that it properly supports the head and neck.

B330B01P-GAT

Removal of the headrest

To remove the headrest, pull it out while pressing the lock knob in the direction of the arrow.
When installing the headrest, first check to be sure that it is facing in the correct direction, and then insert it into the seatback and press downward until it locks in place.
Check to be sure that the lock knob is in the correct position, as shown in the figure, and then try to pull the headrest up to be sure it doesn't come out.

WARNING:
It is dangerous to drive without installing the head restraints.

B270A01P-GAT

SEAT WARMER (Driver's seat only) (Minibus) (If installed)

The seat warmer is provided to warm the front seats during cold weather. With the ignition key in the "ON" position, push the switch to warm the driver's seat.
During mild weather or under conditions where the operation of the seat warmer is not needed, keep the switch in the "OFF" position.

B540A02P-GAT

SEATBACK HOLDER (If installed)

The seatback holders are fitted on the back of the third seat (For 7/9 passengers) or the fourth seat (For 11/12 passengers) to hang the shopping bag and so on.

CAUTION
Do not hang a bag beyond 3 kg. It may cause damage to the seatback holder.

B080G01O-AAT

UNDER TRAY (If installed)

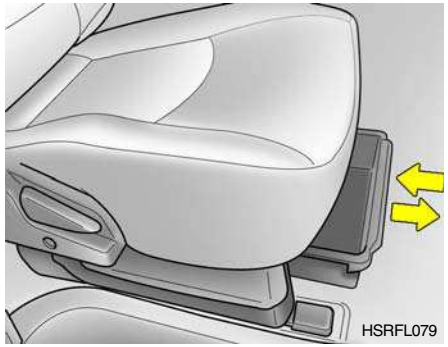

The tray is located under the front passenger seat. It is opened by pulling forward.

WARNING:
To avoid the possibility of injury in case of an accident or a sudden stop, the tray should be kept closed when the car is in motion.

SEAT BELTS

B360A01P-GAT

To protect you and your passengers in the event of an accident, it is most important that the seat belts be worn correctly when you drive.

WARNING:

- **One seat belt should be used by only one person. Doing otherwise can be dangerous.**
- **When driving with children, they should be seated in the second and third seats, and wear lap belts. For an infant, a children safety seat should be used.**
  The regulations concerning driving with children in the front seat may differ from country to country. It is recommended that you obey the pertinent regulations.
- **The seat belts must not be twisted when worn.**
- **Check the belts for cuts, worn or frayed webbing and for checked or deformed metallic parts. Replace the belts if defective.**
- **A dirty belt should be cleaned with neutral detergent in warm water. After rinsing in water, let it dry in the shade. Do not attempt to bleach or re-dye the belts because this affects their characteristics.**
- **Seat belts worn at the time of an accident should not be reused even if they appear flawless, because deteriorated belts cannot withstand another accident. Be sure to replace the seat belt and mounting bolts with new ones.**
- **Never adjust the driver's seat while the vehicle is in motion.**
- **For technical reasons, the second seat and third seat should not be folded down to make a bed while the vehicle is being driven.**
- **To protect you and your passengers in the event of an accident, it is most important that the seat belts be worn correctly when you drive.**
- **The seat belt will provide maximum protection for its wearer if the recliner seatback is placed in fully upright position.**
  When the seatback is reclined, there is greater risk that the passenger will slide under the belt, especially in a forward impact accident, and may be injured by the belt or by striking the instrument panel or seatbacks.

B170A04A-AAT

HEIGHT ADJUSTABLE FRONT SEAT SHOULDER BELT (If installed)

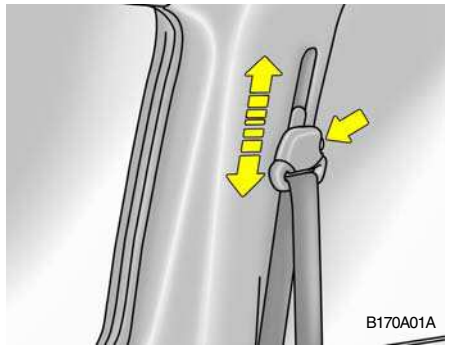

You can adjust the height of the front shoulder belt anchor to one of the 4 positions.
If the height of the adjusting seat belt is too near your neck, you will not be getting the most effective protection. The shoulder portion should be adjusted so that it lies across your chest and midway over your shoulder nearest the door and not your neck.

To adjust the height of seat belt anchor, lower or raise the height adjuster into an appropriate position. To raise the height adjuster, pull it up. To lower it, push it down while pressing the height adjuster button.
Release the button to lock the anchor into position. Try sliding the release button to make sure that it has locked into the position.

WARNING:
- **The height adjuster must be in the locked position whenever the vehicle is moving.**
- **The misadjustment of height of the shoulder belt could reduce the effectiveness of the seat belt in a crash.**

B180A02A-GAT

Driver's and Passenger's 3-Point System with Webbing Clamp Locking Retractor (If installed)

To Fasten Your Belt

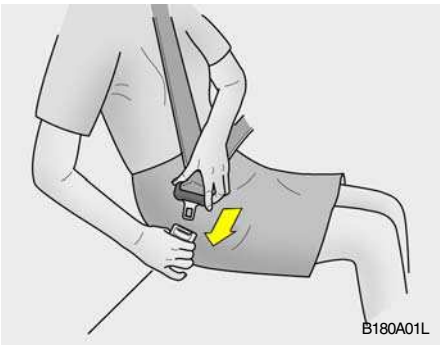

To fasten your seat belt, pull it out of the retractor and insert the metal tab into the buckle. There will be an audible "click" when the tab locks into the buckle.
The seat belt automatically adjusts to the proper length only after the lap belt is adjusted manually so that it fits snugly around your hips. If you lean forward in a slow, easy motion, the belt will extend and let you move around.

If there is a sudden stop or impact, however, the belt will lock into position. It will also lock if you try to lean forward too quickly.

B180A01A-GAT

Driver's and Passenger's 3-Point System with Emergency Locking Retractor (If installed)

To Fasten Your Belt

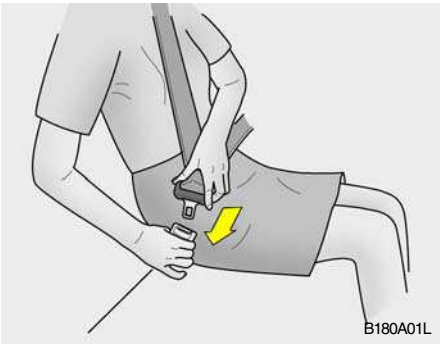

To fasten your seat belt, pull it out of the retractor and insert the metal tab into the buckle. There will be an audible "click" when the tab locks into the buckle.

The seat belt automatically adjusts to the proper length only after the lap belt is adjusted manually so that it fits snugly around your hips. If you lean forward in a slow, easy motion, the belt will extend and let you move around. If there is a sudden stop or impact, however, the belt will lock into position. It will also lock if you try to lean forward too quickly. Check to make sure that the belt is properly locked and that the belt is not twisted.

B200A01S-GAT

Adjusting Your Seat Belt

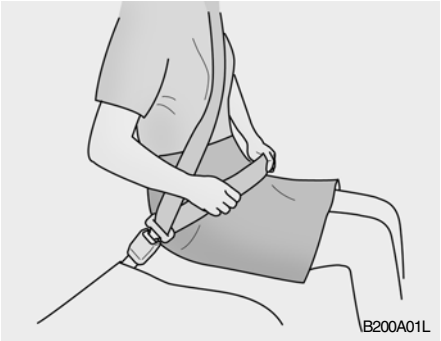

You should place the belt as low as possible on your hips, not on your waist. If the belt is located too high on your body, you could slide under it in case of accident or a sudden stop. This could result of death, serious injury or property damage. Both arms should not be under or over the belt. Rather, one should be over and the other under, as shown in the illustration.
Never wear the seat belt under the arm nearest to the door.

B210A01A-AAT

To Release the Seat Belt

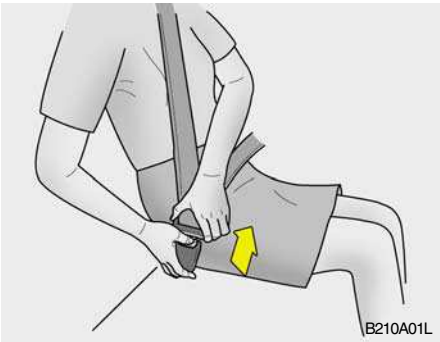

The seat belt is released by pressing the release button in the locking buckle. When it is released, the belt should automatically draw back into the retractor. If this does not happen, check the belt to be sure it is not twisted, then try again.

B370D01P-GAT

2-Point System with Non-Locking Retractor (If installed)

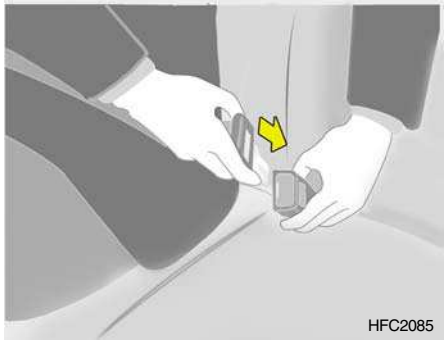

This type of seat belts are equipped with an Non-Locking Retractor.
Holding the latch plate by hand, pull it out until the webbing is fully extended and insert the latch plate into the buckle. When it fits snugly around your hip, the webbing with the latch plate is automatically retracted. To release, unfasten the belt, and a light tug to the webbing with the latch plate will cause the retractor to work automatically.

B370E01P-GAT

2-point Static Type (If installed)

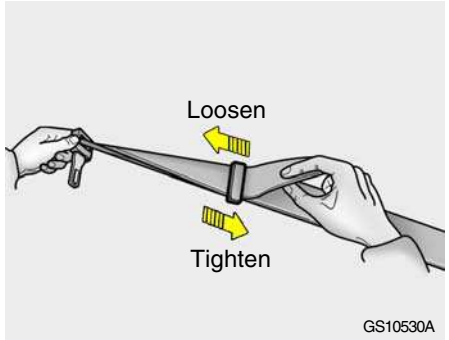

The seat belts should be adjusted by holding the belt and latch plate at right angles to each other, and then pulling the belt as illustrated below to a snug fit around the occupant.
Holding the latch plate by hand, insert the latch plate into the buckle.

B180B02X-GAT

Pre-tensioner Seat Belt (If installed)

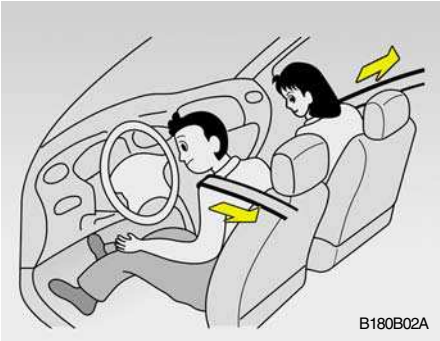

Ordinarily the pre-tensioner seat belt operates in the same way as E.L.R (Emergency Locking Retractor) type **(When vehicles stop suddenly, the belt will lock into the position. It will also lock if you try to lean forward too quickly.)**.
However, when vehicles crash, the retractor rewinds the belt webbing. This will restrain the passenger movement quickly and also reduce the slack between passenger and belt webbing.

NOTE:

- **When the pre-tensioner seat belt is activated, there may be an explosion noise. This noise is normal and is not hazardous.**
- **Pre-tensioner seat belt is designed to operate only when a sufficiently severe impact occurs and it will be only operated once.**

WARNING:
If the pre-tensioner seat belt was activated, never attempt to replace it by yourself. It must be replaced by an authorized Hyundai Dealer.

B230A03A-GAT

(Minibus/Van) (If installed)

Children riding in the car should sit in the rear seat and must always be restrained to minimize the risk of injury in an accident, sudden stop or sudden maneuver. According to accident statistics, children are safer when properly restrained in the rear seats than in the front seat. Larger children should use one of the seat belts provided.
You are required by law to use safety restraints for children. If small children ride in your vehicle you must put them in a child restraint system (safety seat). Children could be injured in a crash if their restraints are not properly secured. For small children and babies, a child seat or infant seat must be used. Before buying a particular child restraint system, make sure it fits your car seat and seat belts, and fits your child. Follow all the instructions provided by the manufacturer when installing the child restraint system.

WARNING:

- A child restraint system must be placed in the rear seat. Never install a child or infant seat on the front passenger's seat. Should an accident occur and cause the passenger side airbag to deploy, it could severely injure or kill an infant or child seated in an infant or child seat. Thus, only use a child restraint in the rear seat of your vehicle.
- Since a safety belt or child restraint system can become very hot if it is left in a closed vehicle, be sure to check the seat cover and buckles before placing a child there.
- When the child restraint system is not in use, fasten it with a safety belt so that it will not be thrown forward in the case of a sudden stop or an accident.
- Children who are too large to be in a child restraint should sit in the rear seat and be restrained with the available lap/shoulder belts.
- Always make sure that the shoulder belt portion of the outboard lap/shoulder belt is positioned midway over the shoulder, never across the neck. Moving the child closer to the center of the vehicle may help provide a good shoulder belt fit. The lap belt portion of the lap/shoulder belt or the center seat lap belt must always be positioned as low as possible on the child's hips and as snug as possible.
- If the seat belt will not properly fit the child, we recommend the use of an approved booster seat in the rear seat in order to raise the child's seating height so that the seat belt will properly fit the child.
- Never allow a child to stand up or kneel on the seat.
- Never use an infant carrier or child safety seat that "hooks" over a seatback; it may not provide adequate security in an accident.
- Never allow a child to be held in a person's arms while they are in a moving vehicle, as this could result in serious injury to the child in the event of an accident or a sudden stop. Holding a child in a moving vehicle does not provide the child with any means of protection during an accident, even if the person holding the child is wearing a seat belt.
- If the child restaint seat is not anchored properly, the risk of a child being seriously injured or killed in a collision greatly increases.

B230F02P-AAT

Installation on Rear Seat Center Position

2 point static type

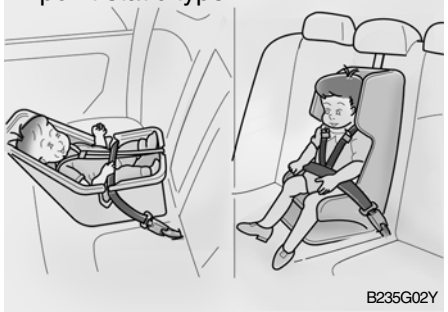

3 point type

To install a child restraint system in the center rear seat, extend the shoulder/lap belt entirely from its retractor until a "click" is felt. This will engage the seat belt retractor automatic locking feature, which allows the seat belt to retract but not extend. Install the child restraint system, buckle the seat belt and allow the seat belt to take up any slack. Make sure that the lap portion of the belt is tight around the child restraint system and the shoulder portion of the belt is positioned so that it can not interfere with the child's head or neck. Also, double check to be sure that the retractor has engaged the Automatic Locking feature by trying to extend webbing out of the retractor. If the retractor is in the Automatic Locking mode, the belt will be locked.

B230G01P-GAT

Installation on Outboard Rear Seats

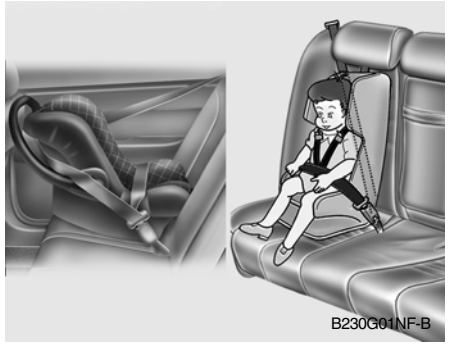

To install a child restraint system in the outboard rear seats, extend the shoulder/lap belt from its retractor. Install the child restraint system, buckle the seat belt and allow the seat belt to take up any slack. Make sure that the lap portion of the belt is tight around the child restraint system and the shoulder portion of the belt is positioned so that it cannot interfere with the child's head or neck. After installation of the child restraint system, try to move it in all directions to be sure the child restraint system is securely installed.

If you need to tighten the belt, pull more webbing toward the retractor. When you unbuckle the seat belt and allow it to retract, the retractor will automatically revert back to its normal seated passenger emergency locking usage condition.

NOTE:

- **Before installing the child restraint system, read the instructions supplied by the child restraint system manufacturer.**
- **If the seat belt does not operate as described, have the system checked immediately by your authorized Hyundai dealer.**

WARNING:

Do not install any child restraint system in the front passenger seat. Should an accident occur and cause the passenger side airbag to deploy, it could severely injure or kill an infant or child seated in an infant or child seat. Therefore, install a child restraint system only in the rear seat of your vehicle.

G230G05P-GAT

Child Seat Restraint Suitability For Seat Position

Use child safety seats that have been officially approved and are appropriate for your children. When using the child safety seats, refer to the following table.

Minibus

Age Group	Seating Position (Minibus for 7 Passengers)				
	Front Passenger	2nd Left Seat	2nd Right Seat	3rd Outboard	3rd Center
0 : Up to 10 kg (0 ~ 9 months)	X	U	U	X	UF
0+ : Up to 13 kg (0 ~ 2 years)	X	U	U	X	UF
I : 9kg to 18kg (9 months ~ 4 years)	X	U	U	X	UF
II & III : 15kg to 36kg (4 ~ 12 years)	UF	UF	UF	X	UF

Age Group	Seating Position (Minibus for 9 Passengers)						
	Front Passenger		2nd Seat			3rd Seat	
	Out-board	Center	Left Seat	Center	Right Seat	Out-board	Center
0 : Up to 10 kg (0 ~ 9 months)	X	X	U	UF	X	X	UF
0+ : Up to 13 kg (0 ~ 2 years)	X	X	U	UF	X	X	UF
I : 9kg to 18kg (9 months ~ 4 years)	X	X	U	UF	X	X	UF
II & III : 15kg to 36kg (4 ~12 years)	X	X	UF	UF	X	X	UF

Van

Age Group	Seating Position (Van for 3 Passengers)	
	Front Passenger Outboard	Front Passenger Center
0 : Up to 10 kg (0 ~ 9 months)	X	X
0+ : Up to 13 kg (0 ~ 2 years)	X	X
I : 9kg to 18kg (9 months ~ 4 years)	X	X
II & III : 15kg to 36kg (4 ~ 12 years)	X	X

Age Group	Seating Position (Van for 6 Passengers)			
	Front Passenger Outboard	Front Passenger Center	2nd Outboard	2nd Center
0 : Up to 10 kg (0 ~ 9 months)	X	X	UF	X
0+ : Up to 13 kg (0 ~ 2 years)	X	X	UF	X
I : 9kg to 18kg (9 months ~ 4 years)	X	X	UF	X
II & III : 15kg to 36kg (4 ~ 12 years)	X	X	UF	X

Truck

Age Group	Seating Position (For Truck)	
	Front Passenger Outboard	Front Passenger Center
0 : Up to 10 kg (0 ~ 9 months)	X	X
0+ : Up to 13 kg (0 ~ 2 years)	X	X
I : 9kg to 18kg (9 months ~ 4 years)	X	UF
II & III : 15kg to 36kg (4 ~ 12 years)	X	UF

U : Suitable for "universal" category restraints approved for use in this mass group

UF: Suitable for forward-facing "universal" category restraints approved for use in this mass group

X : Seat poition not suitable for children in this mass group

STEERING WHEEL TILT LEVER

B600A01A-AAT

(If installed)

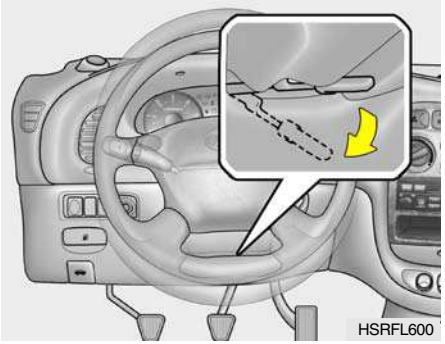

To adjust the steering wheel:

1. Push the lever downward to unlock.
2. Raise or lower the steering wheel to the desired position.
3. After adjustment, securely tighten the lever by pulling it upward.

WARNING:

Do not attempt to adjust the steering wheel while driving as this may result in loss of control of the vehicle and serious injury or death.

SUPPLEMENTAL RESTRAINT (AIRBAG) SYSTEM

B240A01F-GAT

(If installed)

Driver's Side Airbag

B240A01P

Your Hyundai is equipped with a Supplemental Restraint (Airbag) System. The indications of the system's presence are the letters "SRS AIR BAG" embossed on the airbag pad cover in the steering wheel and the passenger's side front panel pad above the glove box.

The Hyundai SRS consists of airbags installed under the pad covers in the center of the steering wheel and the passenger's side front panel above the glove box. (The purpose of the SRS is to provide the vehicle's driver and/or the front passenger with additional protection than that offered by the seat-belt system alone, in case of a frontal impact of sufficient severity.)

NOTE:
Be sure to read information about the SRS on the labels provided on the backside of the sun visor and in the glove box.

WARNING:

- **As its name implies, the SRS is designed to work with, and be supplemental to, the driver's and the passenger's three point seat belt systems and is not a substitute for them. Therefore your seat belts must be worn at all times while the vehicle is in motion. In addition, the airbags deploy only in certain frontal impact conditions severe enough to likely cause significant injury to the vehicle occupants.**
- **The SRS is designed to deploy the airbags only when an impact is sufficiently severe and when the impact angle is less than 30° from the forward longitudinal axis of the vehicle and will not deploy in side, rear or rollover impacts. Additionally, the airbags will only deploy once. Thus, seat belts must be worn at all times.**
- **For maximum safety protection in all types of crashes, all occupants including the driver should always wear their seat belts whether or not an airbag is also provided at their seating position to minimize the risk of severe injury or death in the event of a crash. Do not sit or lean unnecessarily close to the airbag while the vehicle is in motion.**
- **The SRS airbag system must deploy very rapidly to provide protection in a crash. If an occupant is out of position because of not wearing a seat belt, the airbag may forcefully contact the occupant causing serious or fatal injuries.**

B240B02P-AAT

SRS Components and Functions

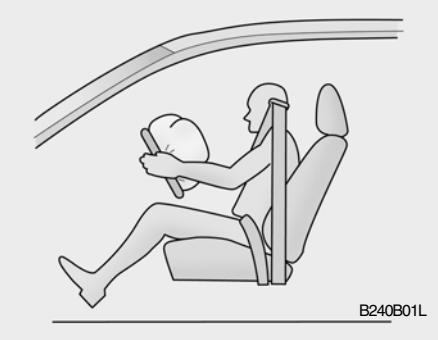

The SRS consists of the following components:

- Driver's Side Airbag Module
- Passenger's Side Airbag Module
- SRS Service Reminder Indicator (SRI)
- SRS Control Module (SRSCM)

The SRSCM continually monitors all elements while the ignition is "ON" to determine if a frontal or near-frontal impact is severe enough to require airbag deployment.

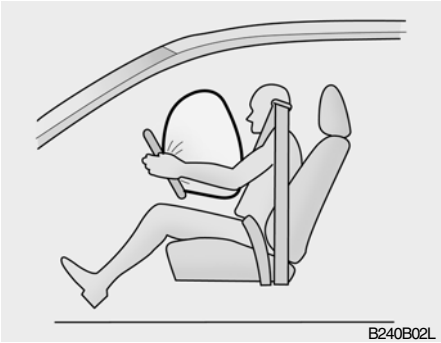

The SRS service reminder indicator (SRI) on the instrument panel will blink for about 6 seconds after the ignition key is turned to the "ON" position or after the engine is started, after which the SRI should go out.

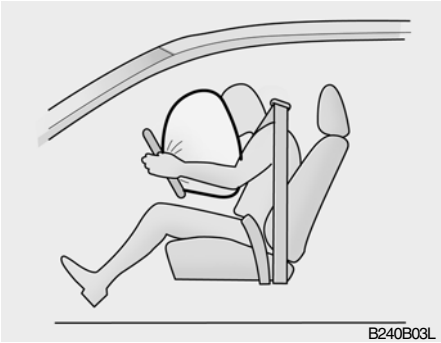

The airbag modules are located both in the center of the steering wheel and in the front passenger's panel above the glove box. When the SRSCM detects a considerable impact to the front of the vehicle, it will automatically deploy the airbags.

Upon deployment, tear seams molded directly into the pad covers will separate under pressure from the expansion of the airbags. Further opening of the covers then allows full inflation of the airbags.

A fully inflated airbag in combination with a properly worn seat belt slows the driver's or the passenger's forward motion, thus reducing the risk of head or chest injury.

After complete inflation, the airbag immediately starts deflating, enabling the driver to maintain forward visibility.

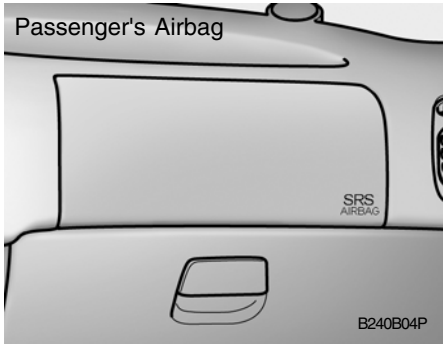

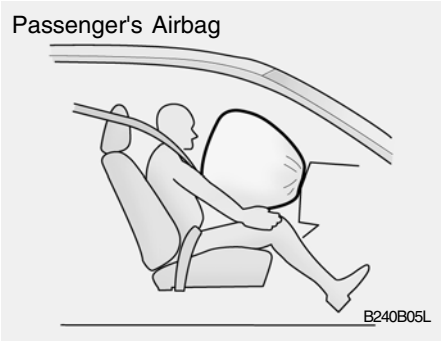

CAUTION:

When installing the container of liquid air refresher inside a vehicle, do not place it near the instrument cluster nor on the crash pad surface. If there is any leakage from the air refresher onto these areas (Instrument cluster, crash pad or air ventilator), it may damage these parts. If the liquid from air refresher does leak onto these areas, wash them with water immediately.

WARNING:

- **When the SRS is activated, there may be a loud noise and fine dust will be released through the vehicle. These conditions are normal and are not hazardous. However, the fine dust generated during airbag deployment may cause skin irritation. Be sure to wash your hands and face thoroughly with lukewarm water and a mild soap after an accident in which the airbags were deployed.**
- **The SRS can function only when the ignition key is in the "ON" position. If the SRS SRI does not illuminate, or continuously remains on, after illuminating for about 6 seconds when the ignition key is turned to the "ON" position, or after the engine is started, or comes on while driving, the SRS is not working properly. If this occurs, have your vehicle immediately inspected by your Hyundai dealer.**
- **Before you replace a fuse or disconnect a battery terminal, turn the ignition key to the "LOCK" position or remove the ignition key. Never remove or replace the air bag related fuse(s) when the ignition key is in the "ON" position. Failure to heed this warning will cause the SRS SRI to illuminate.**

B240C01HP-GAT

SRS Care

The SRS is virtually maintenance-free and so there are no parts you can safely service by yourself. The entire SRS system must be inspected by an authorized Hyundai dealer 10 years after the date that the vehicle was manufactured.

Any work on the SRS system, such as removing, installing, repairing, or any work on the steering wheel must be performed by a qualified Hyundai technician. Improper handling of the SRS system may result in serious personal injury.

B240C01HP

WARNING:

- **Extreme Hazard! Do not use a rearward facing child restraint on a seat protected by an airbag in front of it!**
- **Modification to SRS components or wiring, including the addition of any kind of badges to the pad covers or modifications to the body structure, can adversely affect SRS performance and lead to possible injury.**
- **For cleaning the airbag pad covers, use only a soft, dry cloth or one which has been moistened with plain water. Solvents or cleaners could adversely affect the airbag covers and proper deployment of the system.**
- **No objects should be placed over or near the airbag modules on the steering wheel, instrument panel, and the front passenger's panel above the glove box, because any such object could cause harm if the vehicle is in a crash severe enough to cause the airbags to inflate.**
- **If the airbags inflate, they must be replaced by an authorized Hyundai dealer.**
- **Do not tamper with or disconnect SRS wiring, or other components of the SRS system. Doing so could result in injury, due to accidental inflation of the airbags or by rendering the SRS inoperative.**

- Do not install a child restraint system in the front passenger seat position.
  A child restraint system must never be placed in the front seat. The infant or child could be severely injured by an airbag deployment in case of an accident.
- If components of the airbag system must be discarded, or if the vehicle must be scrapped, certain safety precautions must be observed. Your Hyundai dealer knows these precautions and can give you the necessary information. Failure to follow these precautions and procedures could increase the risk of personal injury.
- If you sell your vehicle, be sure to inform the new owner of these important points and make certain that this manual is transferred to the new owner.

- If your car was flooded and has soaked carpeting or water on flooring, you shouldn't try to start engine; have the car towed to authorized Hyundai dealer.
- Do not replace the bumper or the bumper guard with other than Hyundai genuine parts. Otherwise, it can adversely affect SRS performance and lead to unexpected injury.

INSTRUMENTS AND CONTROLS

Instrument Cluster And Indicator Lights 2-2
Warning And Indicator Lights 2-8
Instrument Cluster 2-12
Odometer/Trip odmeter.....2-14
Multimeter 2-16
Muti-funition Light Switch 2-19
Windshield Wiper And Washer Switch 2-21
Headlamp Leveling Device System.....2-23
Instrument Panel Light Control (Rheostat) 2-24
Engine Rpm Adjustment Knob 2-24
Fog Lamp Switch 2-25
Front/Rear Window Defroster Switch 2-26
Interior Light 2-28
Sunroof 2-30
Mirror 2-34
Drink Holder 2-35
Ashtray 2-36
Digital Clock 2-37
Horn 2-37
Heating And Cooling Control 2-38
Rear Heater And Air Conditioner 2-45
Overhead Air Conditioning.....2-47
Climate Control Air Filter 2-47
Stereo Sound System 2-49
Audio System 2-51
Antenna 2-73

2

2 INSTRUMENT CLUSTER AND INDICATOR

C130A05P-GAT

Minibus/Van (With Tachometor)

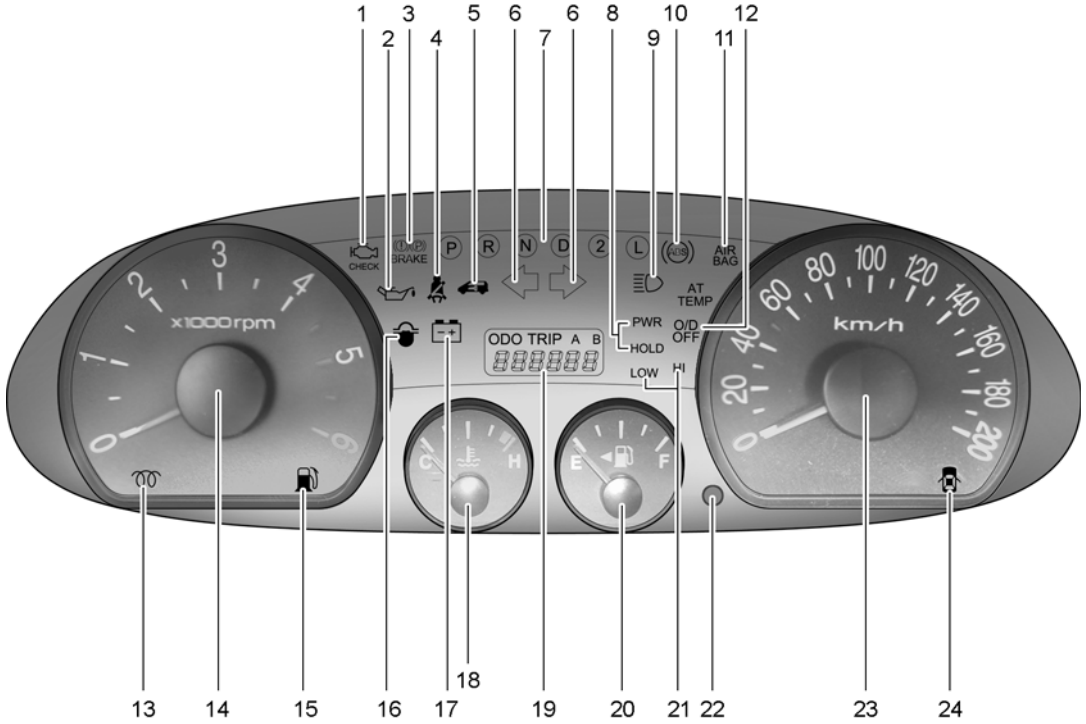

C130A05P-1

1. Malfunction indicator light (MIL) (If installed)
2. Oil pressure warning light
3. Brake warning and parking brake indicator light
4. Seat belt warning light (If installed)
5. Immobilizer warning light (If installed)
6. Turn-signal indicator lights
7. Automatic transmission position indicator light (Automatic transmission only)
8. POWER/HOLD mode indicator light (Automatic transmission only)
9. High-beam indicator light
10. ABS Service reminder indicator light (If installed)
11. SRS (Airbag) service reminder indicator light (SRI) (If installed)
12. Overdrive off indicator light (Automatic transmission only)
13. Diesel preheat indicator light (Diesel only)
14. Tachometer (If installed)
15. Low fuel level warning light
16. Fuel filter warning light (Diesel only)
17. Charging system warning light
18. Coolant Temperature gauge
19. Odometer/Trip odometer
20. Fuel gauge
21. 4WD LOW/HI indicator light
22. Trip odometer reset switch
23. Speedmeter
24. Door-ajar warning light

C130B05P-GAT

Minibus/Van (Without Tachometer)

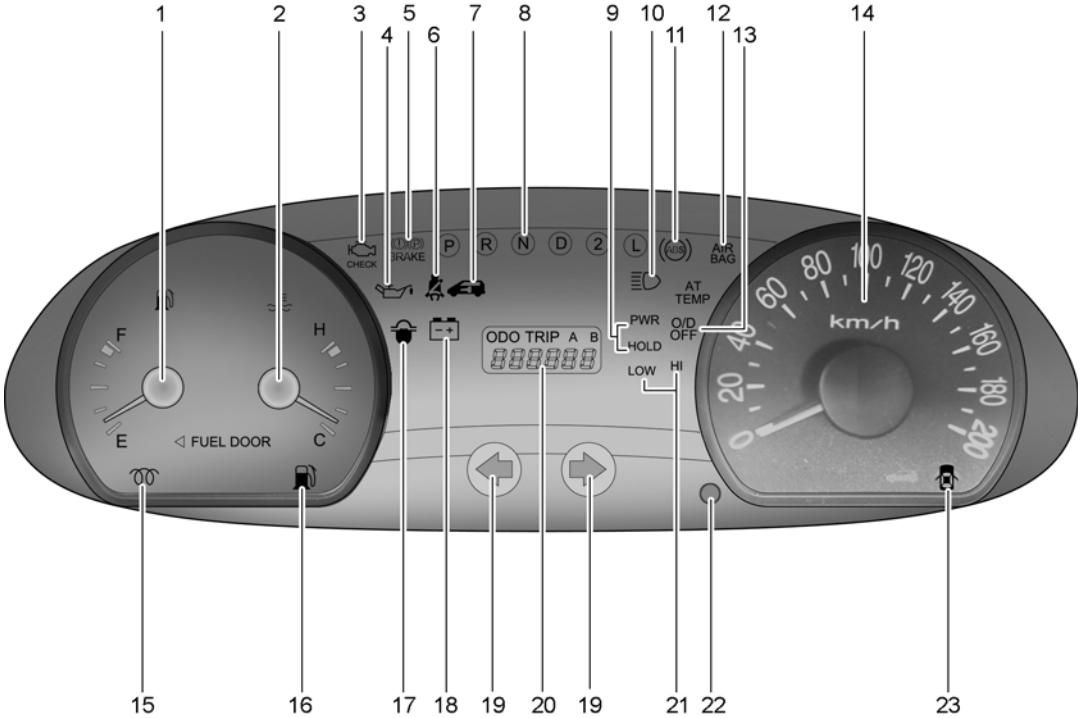

C130B05P-1

1. Fuel gauge
2. Coolant Temperature gauge
3. Malfunction indicator light (MIL) (If installed)
4. Oil pressure warning light
5. Brake warning and parking brake indicator light
6. Seat belt warning light (If installed)
7. Immobilizer warning light (If installed)
8. Automatic transmission position indicator light (Automatic transmission only)
9. POWER/HOLD mode indicator light (Automatic transmission only)
10. High-beam indicator light
11. ABS Service reminder indicator light (If installed)
12. SRS (Airbag) service reminder indicator light (SRI) (If installed)
13. Overdrive off indicator light (Automatic transmission only)
14. Speedmeter
15. Diesel pre-heat indicator light (Diesel only)
16. Low fuel level warning light
17. Fuel filter warning light (Diesel only)
18. Charging system warning light
19. Turn-signal indicator lights
20. Odometer/Trip odometer
21. 4WD LOW/HI indicator light
22. Trip odometer reset switch
23. Door-ajar warning light

C130C05P-GAT

Truck

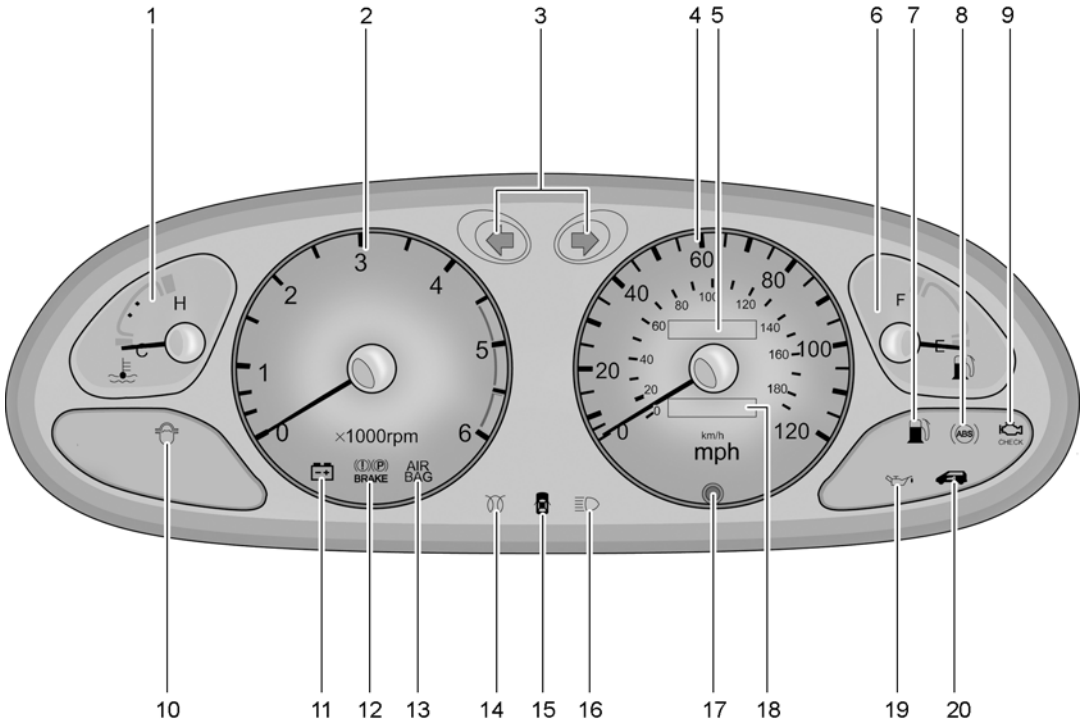

C130B05P

1. Coolant Temperature gauge
2. Tachometer (If installed)
3. Turn-signal indicator lights
4. Speedmeter
5. Odometer
6. Fuel gauge
7. Low fuel level warning light
8. ABS Service reminder indicator light (If installed)
9. Malfunction indicator light (MIL) (If installed)
10. Fuel filter warning light (Diesel only)
11. Charging system warning light
12. Brake warning and parking brake indicator light
13. SRS (Airbag) service reminder indicator light (SRI) (If installed)
14. Diesel pre-heat indicator light (Diesel only)
15. Door-ajar warning light
16. High-beam indicator light
17. Tripmeter reset switch
18. Tripmeter
19. Oil pressure warning light
20. Immobilizer warning light (If installed)

B260B01S-GAT

SRS (Airbag) Service Reminder Indicator (SRI) (If installed)

The SRS service reminder indicator (SRI) comes on and flashes for about 6 seconds after the ignition key is turned to the "ON" position or after the engine is started, after which it will go out.

This light also comes on when the SRS is not working properly. If the SRI does not come on, or continuously remains on after flashing for about 6 seconds when you turned the ignition key to the "ON" position or started the engine, or if it comes on while driving, have the SRS inspected by an authorized Hyundai Dealer.

C130N02Y-GAT

Anti-lock Brake Warning Light (If installed)

When the key is turned to the "ON" position, the ABS light will come on and then go off in a few seconds.
If the ABS light remains on, comes on while driving, or does not come on when the key is turned to the "ON" position, this indicates that there may be a problem with the ABS.
If this occurs, have your vehicle checked by your Hyundai dealer as soon as possible. The normal braking system will still be operational, but without the assistance of the anti-lock brake system.

WARNING:
If both the ABS SRI and Parking Brake/Brake fluid level warning lights remain "ON" or come on while driving, there may be a problem with E.B.D (Electronic brake force distribution). If this occurs, avoid sudden stops and have your vehicle checked by your Hyundai dealer as soon as possible.

C130I01P-GAT

Overdrive/Off Indicator (If installed)

When the overdrive switch is turned on and 4th gear is engaged, the overdrive off indicator will go out. This amber indicator will be illuminated when the overdrive switch is turned off.
(Automatic tranmission only)

C130F01P-GAT

Turn-signal Indication Lamps

These indication lamps blink on and off when a turn-signal lamp is blinking. If the blinking is too short, the cause may be a faulty turn-signal lamp connection or a blown lamp bulb.

C130G01P-GAT

High-beam Indication Lamp

This indication lamp illuminates when the high beams are on.

B260G01A-AAT

Low Oil Pressure Warning Light

CAUTION:

If the oil pressure warning light stays on while the engine is running, serious engine damage may result. The oil pressure warning light comes on whenever there is insufficient oil pressure. In normal operation, it should come on when the ignition switch is turned on, then go out when the engine is started. If the oil pressure warning light stays on while the engine is running, there may be a serious malfunction.
If this happens, stop the car as soon as it is safe to do so, turn off the engine and check the oil level. If the oil level is low, fill the engine oil to the proper level and start the engine again. If the light stays on with the engine running, turn the engine off immediately. In any instance where the oil light stays on when the engine is running, the engine should be checked by an authorized Hyundai dealer before the car is driven again.

B260H03A-AAT

Parking Brake/Low Brake Fluid Level Warning Light

WARNING:

If you suspect brake trouble, have your brakes checked by a Hyundai dealer as soon as possible. Driving your car with a problem in either the brake electrical system or brake hydraulic system is dangerous, and could result in a serious injury or death.

Warning Light Operation

The parking brake/brake fluid level warning light should come on when the parking brake is applied and the ignition switch is turned to "ON" or "START". After the engine is started, the light should go out when the parking brake is released.

If the parking brake is not applied, the warning light should come on when the ignition switch is turned to "ON" or "START", then go out when the engine starts. If the light comes on at any other time, you should slow the vehicle and bring it to a complete stop in a safe location off the roadway.
The brake warning light indicates that the brake fluid level in the brake master cylinder is low and hydraulic brake fluid conforming to DOT 3 or DOT 4 specifications should be added. After adding fluid, if no other trouble is found, the car should be immediately and carefully driven to a Hyundai dealer for inspection. If further trouble is experienced, the vehicle should not be driven at all but taken to a dealer by a professional towing service or some other safe method.

C130E01P-GAT

Charging System Warning Light

This light illuminates when the ignition switch is set to the "ON" position and goes off after the engine has started. If it lights up while the engine is running, there is a problem in the charging system. Check to see if the V-belt is broken, and then contact the nearest authorized HYUNDAI dealer.

B260E01HP-GAT

Seat Belt Warning Light (If installed)

The seat belt warning light blinks for about 6 seconds when the ignition key is turned from the "OFF" position to "ON" or "START".

B260L02HP-GAT

Door Ajar Warning Light and Chime (If Installed)

The door ajar warning light warns you that a door is not completely closed and the chime warns you that the key is in the ignition switch.

NOTE :

The warning chime only sounds whenever the key is in the ignition switch and the driver's side front door is open simultaneously. The chime sounds until the key is removed from the ignition switch or the driver's side front door is closed.

C130D01P-GAT

Low Fuel Level Warning Light

This light illuminates when the fuel level in the fuel tank falls to a low level. If it illuminates, the fuel should be added soon.

C130Q01P-GAT

POWER/HOLD mode Indicator Light (If installed)

See page 3-14 ~ 3-15.

C130O02P-GAT

Malfanction Indicator Light (If installed)

This light illuminates when there is a malfunction of an engine electrical related component, and the system is not functioning properly. This light will also illuminate when the ignition key is turned to the "ON" position, and then it will go out in a few seconds. If it illuminates while driving, or does not illuminate when the ignition key is turned to the "ON" position, take your car to your nearest authorized Hyundai dealer and have the system checked.

C130R01P-GAT

4WD LOW/HI Indicator Light (If installed)

See page 3-17.

B260U01TB-GAT

Immobilizer Indicator Light (If installed)

This indicator light comes on for some seconds after the ignition key is turned to the "ON" position. At this time, you can start the engine. The light goes out after the engine is running. In case this light goes out before you start the engine, you must turn to the "LOCK" position and restart the engine. In case this light blinks for five seconds when the ignition key is turned to "ON" position, this indicates that the immobilizer system is out of order. At this time, refer to the explanation of the Limp home procedure(See page 1-9) or consult to the Hyundai dealer.

C130L01P-GAT

Diesel Preheat Indication Light

The indication light illuminates amber when the ignition switch is placed at the "ON" position. The engine can be started after the preheat indication light goes off. The illuminating time varies with the water temperature.

Water temperature (°C)	Illuminating time (sec)
Below -30	15
-20	10
0	3
20	2
40	1

NOTE:

If the engine were not started within 10 seconds after the preheating is completed, turn the ignition key once more to the "LOCK" position, and then to the "ON" position, in order to preheat again.

C130H01P-GAT

Fuel Filter Warning Light

This light illuminates when the ignition switch is set to the "ON" position and goes off after the engine has started. If it lights up while the engine is running, it indicates that water has accumulated inside the fuel filter. If this happens, remove the water from the fuel filter. (Refer to "In case of emergency")

B270B02O-GAT

PARKING START WARNING SOUND (If installed)

If the vehicle driven at over 10km/h (6mph) more 2~3 seconds, the warning chime will sound continuously when the parking brake engaged.

C080A01A-GAT

FUEL GAUGE

Minibus/Van

With Tachometer

C080A02P

Without Tachometer

C080B02P

Truck

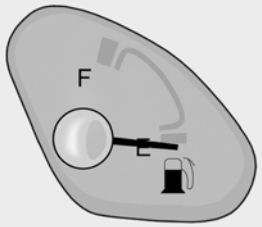

C080C02P

The needle on the gauge indicates the approximate fuel level in the fuel tank. The fuel capacity is given in Section 9.

B290A02A-AAT

ENGINE COOLANT TEMPERATURE GAUGE

Minibus/Van

With Tachometer

C090A02P

Without Tachometer

C090B02P

Truck

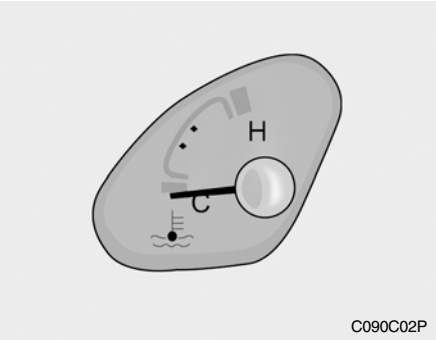

C090C02P

WARNING:
Never remove the radiator cap when the engine is hot. The engine coolant is under pressure and could erupt and cause severe burns. Wait until the engine is cool before removing the radiator cap.

The needle on the engine coolant temperature gauge should stay in the normal range. If it moves across the dial to "H" (Hot), pull over and stop as soon as possible and turn off the engine. Then open the hood and after the engine has cooled, check the coolant level and the water pump drive belt. If you suspect cooling system trouble, have your cooling system checked by a Hyundai dealer as soon as possible.

C040A02P-GAT

SPEEDOMETER

Minibus/Van

C040A02P

Truck

C040A01P-1

The speedometer indicates the vehicle's speed in kilometers per hour (km/h) or miles per hour (mph).

B330A02A-AAT

TACHOMETER (If installed)

Minibus/Van

Gasoline Engine

C070B02P

Diesel Engine

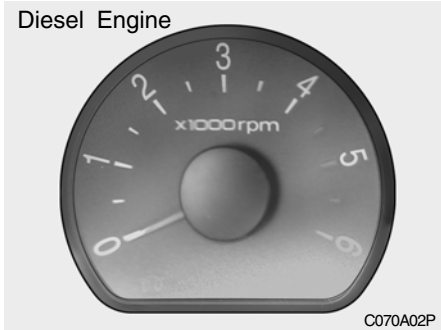

C070A02P

Truck

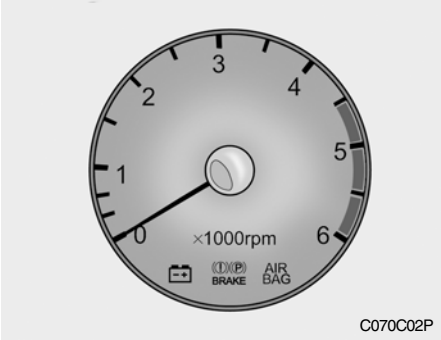

C070C02P

The tachometer registers the speed of your engine in revolutions per minute (rpm).

CAUTION:
The engine should not be raced to such a speed that the needle enters the red zone on the tachometer face. This can cause severe engine damage and may void your warranty.

B310B01P-GAT

ODOMETER/TRIP ODOMETER

Minibus / Van

Pushing in the reset switch under the right side of the speedometer when the ignition switch is turned "ON" will display the following sequence:

HXDFL077-1

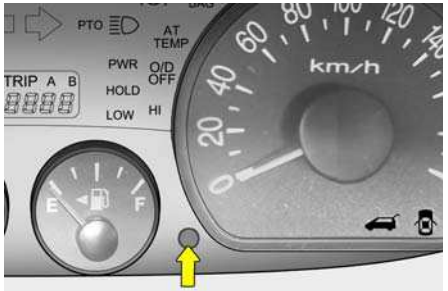

B310B01P

1. Odometer

The odometer records the total driving distance in kilometers or miles.

NOTE:
Any alteration of the odometer may void your warranty coverage.

2,3. Trip odometer

Records the distance of 2 trips in kilometers or miles.

TRIP A: First distance you have traveled from your origination point to a first destination.
TRIP B: Second distance from the first destination to the final destination.

To shift from TRIP A to TRIP B, press the reset switch. When pressed for 1 second, it will reset to 0.

C040A02P-GAT

ODOMETER/TRIPMETER
Truck

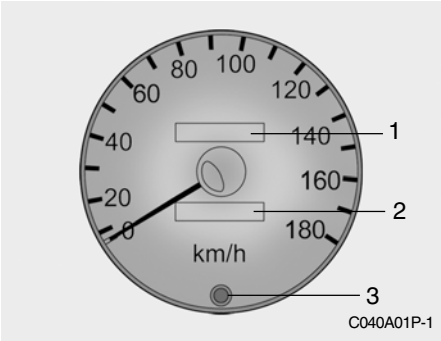

C040A01P-1

1. Odometer

The odometer indicates the total distance the vehicle has travelled.

2, 3. Tripmeter and reset button

The tripmeter indicates the distance travelled during a particular trip or period.
Press the reset button to return the tripmeter indication to zero.

MULTIMETER

C031A01P-GAT

(Minibus) (If installed)

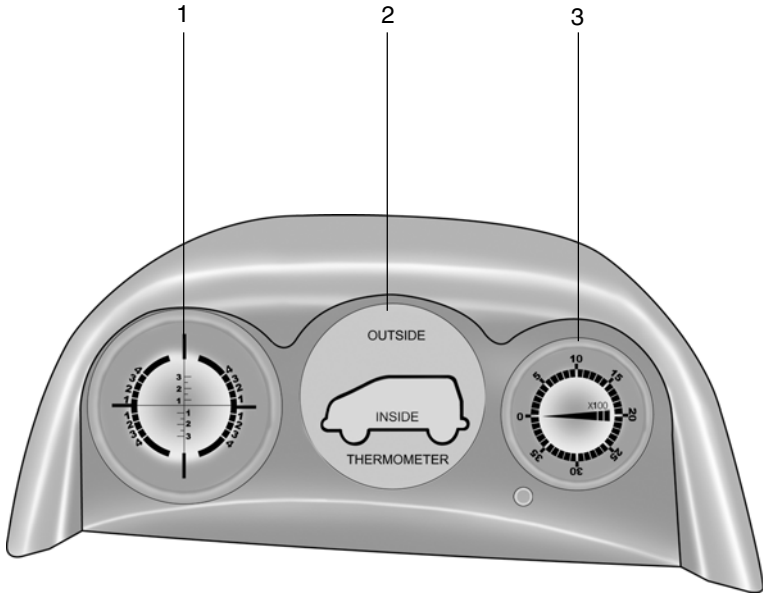

C031A01P

1. Inclinometer
2. Thermometer
3. Altimeter

C100A01P-GAT

1. Inclinometer (If installed)

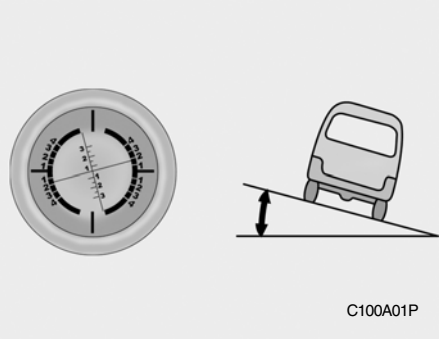

This meter indicates the inclination angle of the vehicle, both front-to-rear and side to side.

1. Side-to-side inclination (Right inclination of 15°)

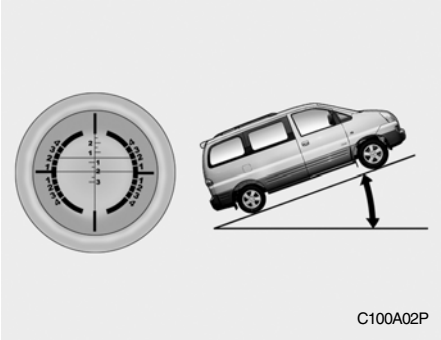

2. Front-to-rear inclination (Rear inclination of 20°)

NOTE:

The inclinometer indicates the correct inclination when the vehicle is stationary, but a slight reading error may be given when driving the vehicle.

C110A01P-GAT

2. Thermometer (If installed)

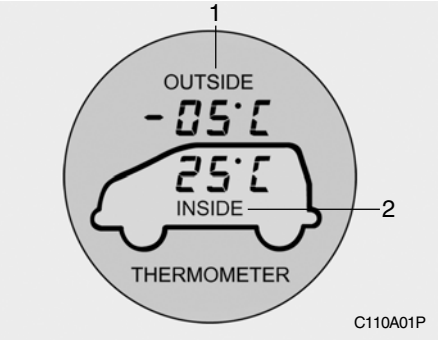

The thermometer displays the temperatures inside and outside the vehicle when the ignition switch is at "ACC" or "ON".

1. Temperature out side the vehicle
2. Temperature inside vehicle

NOTE:

- **The external temperature displayed may differ from the actual temperature on account of surrounding conditions, driving conditions, etc.**
- **Temperature inside or outside the vehicle that are below -30°C or over 70°C will result in error message being displayed (-E°C, E°C).**

C120A01P-GAT

3. Altimeter (If installed)

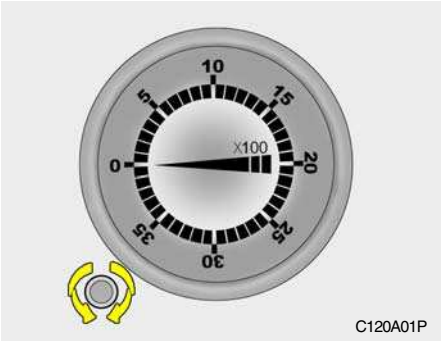

Before driving the vehicle, set the pointer to 0 on the dial by turning the adjusting knob. The meter will indicate the height at the destination.

MUTI-FUNITION LIGHT SWITCH

C150A01P-GAT

Turn signal switch

Pulling down on the lever causes the turn signals on the left side of the car to blink. Pushing upward on the lever causes the turn signals on the right side of the car to blink. As the turn is completed, the lever will automatically return to the center position and turn off the turn signals at the same time. If either turn signal indicator light blinks more rapidly than usual, goes on but does not blink, or does not go on at all, there is a malfunction in the system. Check for a burned-out fuse or bulb or see your Hyundai dealer.

B340B01A-AAT

Lane Change Signal

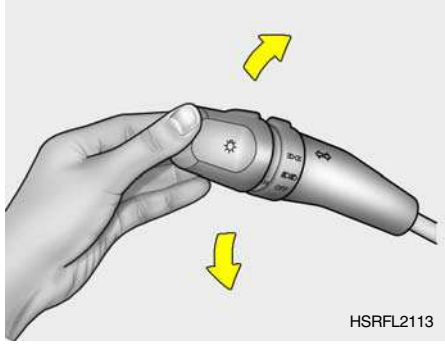

To indicate a lane change, move the lever up or down to a point where it begins flashing.
The lever will automatically return to the center position when released.

B340C03P-AAT

Headlight Switch

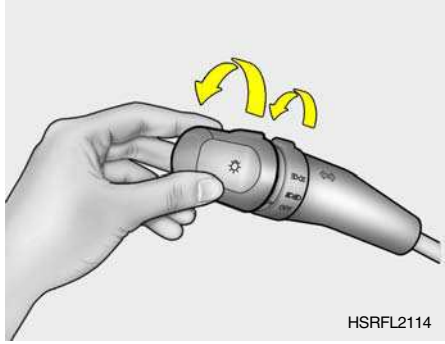

To operate the headlights, turn the barrel on the end of the multi-function switch. The first position turns on the position, licence-plate, tail lights and instrument panel lights. The second position turns on the headlights.

NOTE:
The ignition must be in the "ON" position to turn on the headlights.

Parking light auto cut (If installed)

- o The purpose of this feature is to prevent the battery from being discharged. The system automatically turns off the small light when the driver removes the ignition key and opens the driver- side door.
- o With this feature, the parklight will be turned off automatically if the driver parks on the side of road at night.

If necessary, to keep the lights on when the ignition key is removed, perform the following :

1) Open the driver-side door.
2) Turn the parklights OFF and ON again using the light switch on the steering column.

C160A01P-GAT

High-beam switch

To turn on the headlight high beams, push the lever forward (away from you). The High Beam Indicator Light will come on at the same time. For low beams, pull the lever back toward you.

B340F01MC-GAT

Daytime Running Lights (If Installed)

Your Hyundai is equipped with daytime running lights. The daytime running lights are used to improve visibility for oncoming traffic. Your vehicle daytime running lights are designed to remain on continuously when the engine is operating even though the headlight switch is in the "OFF" position. If you turn on the tail lights when the ignition switch is in the "ON" position, the daytime running lights will go off.

C170A01P-GAT

Headlight Flasher

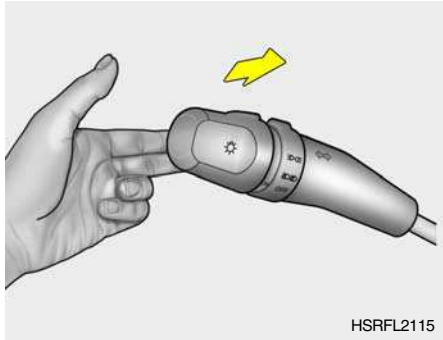

The headlights will go on when the lever is pulled toward you and will go off when it is released.
The headlights can be flashed even though the headlight switch is in the "OFF" position.

WINDSHIELD WIPER AND WASHER SWITCH

C180A02P-GAT

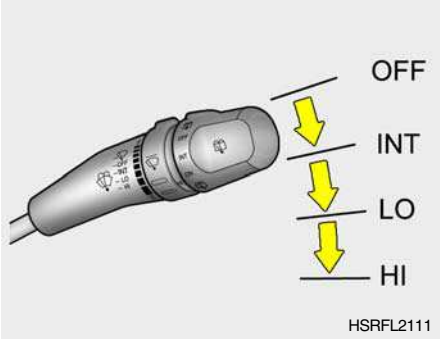

The windshield wiper and washer switch can be operated with the ignition switch at the "ON" or "START" position. Move the switch to operate the windshield wipers or spray the washer fluid.

Windshield wipers

1.OFF
2.INT : The interval between wipers can be varied from 2 to 10 seconds by turning.
3.LOW : Speed operation the interval adjuster switch.
4.HIGH : Speed operation the interval adjuster switch.

NOTE:

- **Before operating the wipers in cold weather, check to be sure that the wiper blades are not frozen to the windshield. Attempting to operate the wipers while the blades are frozen to the windshield could cause the motor to burn out.**
- **If the wipers stop during operation because of ice or some other obstruction on the windshield, the wiper motor could burn out even if the wiper switch is turned off. If this occurs, promptly stop the vehicle, turn off the ignition switch, and clean the windshield to allow proper wiper operation.**
- **Do not use the wipers when the windshield is dry:doing so could scratch the windshield and wear the blades prematurely.**

B350B01A-AAT

Windshield Washer Operation

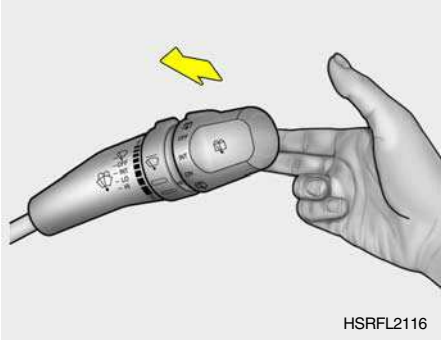

To use the windshield washer, pull the wiper/washer lever toward the steering wheel. When the washer lever is operated, the wipers automatically make two passes across the windshield. The washer continues to operate until the lever is released.

NOTE:

- **Do not operate the washer more than 15 seconds at a time or when the fluid reservoir is empty.**
- **In icy or freezing weather, be sure the wiper blades are not frozen to the glass prior to operating the wipers.**

- **In areas where water freezes in winter, use windshield washer antifreeze.**

Mist Wiper Operation

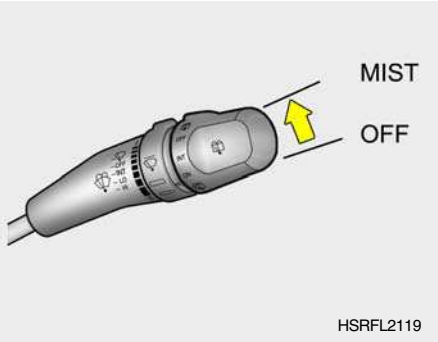

If a single wipe is desired in mist, push the windshield wiper and washer control lever upwards.

B350C01P-AAT

Adjustable Intermittent Wiper Operation (If installed)

To use the intermittent wiper feature, place the wiper switch in the "INT" position. With the switch in this position, the interval between wipes can be varied by turning the interval adjuster barrel.

C190A02P-GAT

Tail gate window wiper and washer switch (Minibus/Van)

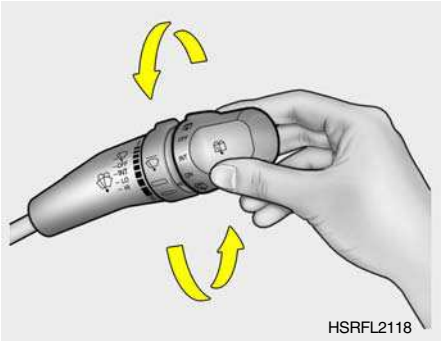

1. : The rear window wiper starts to operate three times after the washer fluid sprays onto the rear window.
2. OFF
3. INT: The interval between wipes operates every 1.5 seconds intermittently. (if installed)
4. ON : The rear window wiper starts to operate continuously.
5. : The washer fluid will be sprayed onto the rear window and the wiper operates while the rear window wiper barrel is placed in this position.

Do not operate the washer continuously for more than 15 seconds or when the fluid reservoir is empty; this could damage the system. Do not operate the wiper when the window is dry; this can result in scratching as well as premature wiper blade wear.
For the reason stated above,do not operate the washer when the washer fluid reservoir is empty.

NOTE:

- **Before operating the wiper in cold weather, check to be sure that the wiper blade is not frozen to the rear window. Attempting to operate the wiper while the blade is frozen to the rear window could cause the motor to burn out.**
- **If the wiper stops during operation because of ice or some other obstruction on the rear window, the wiper motor could burn out even if the wiper switch is turned off. If this occurs, promptly stop the vehicle, turn off the ignition switch, and clean the rear window to allow proper wiper operation.**
- **Do not use the wiper when the rear window is dry; doing so could scratch the rear window and wear the blade prematurely.**

HEADLIGHT LEVELING DEVICE SYSTEM

C210A05P-GAT

(If installed)

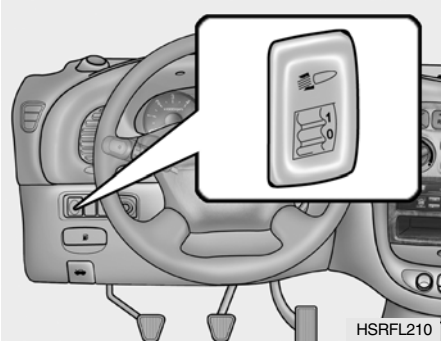

To adjust the headlight beam level according to the number of the passengers and the loading weight in the cargo, turn the beam leveling switch.
The higher the number of the switch position, the lower the headlight beam level.
Always keep the headlight beam at the proper leveling position, or headlights may dazzle other road users.
Listed chart is the examples of proper switch settings.

For loading conditions other than those listed, adjust the switch position so that the beam level may be the nearest as the condition obtained according to the list.

LOADING CONDITION	MINIBUS			VAN	
	2WD		4WD	2WD	
	7/9	12	7	3	6
Driver only	0	0	0	0	0
Driver + Front passenger	0	-	0	-	0
Driver, front passenger + Farthest Rear Seat Full	1	-	1	-	0
Full passengers	1	-	1	-	0
Full passengers + Maximum Permissible loading	2	-	2	-	-
Driver+Maximum Permissible loading	3	1	3	3	2

LOADING CONDITION	TRUCK
Driver only	0
Driver + Permissible Rear axle load	1

INSTRUMENT PANEL LIGHT CONTROL (RHEOSTAT)

C220A01P-GAT

(Minibus/Van) (If installed)

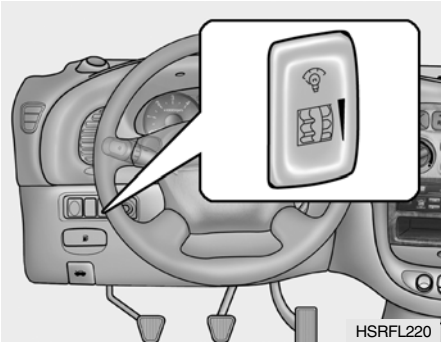

The instrument panel lights can be made brighter or dimmer by turning the instrument panel light control knob.

ENGINE RPM ADJUSTMENT KNOB

C230A01P-GAT

(Diesel) (If installed)

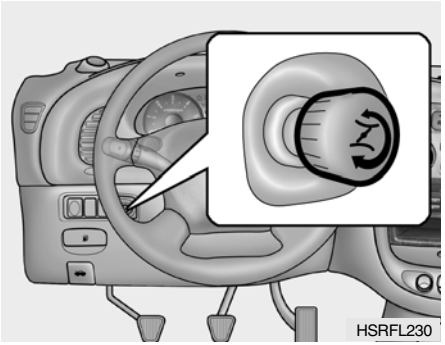

When the outside air temperature is very low, or when it is necessary to warm up the engine, then turn the knob clockwise to that point at which the engine runs smoothly, and then, once the warming up is completed, fully turn the knob counterclockwise.

CAUTION:
Never attempt to adjust the vehicle during driving by using the control knob.

FRONT DOOR EDGE WARNING LIGHT

B620A01S-AAT

(If installed)

A red light comes on when the front door is opened. The purpose of this light is to assist when you get in or out and also to warn passing vehicles.

HIGH-MOUNTED REAR STOP LIGHT

B550A01Y-AAT

(Minibus/Van) (If Installed)

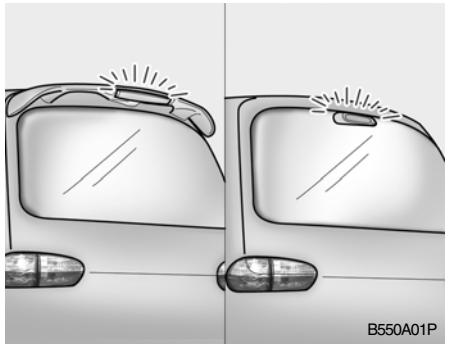

In addition to the lower-mounted rear stoplights on either side of the car, the high mounted rear stoplight in the center of the rear window or installed in the rear spoiler also comes on when the brakes are applied.

FRONT FOG LIGHT SWITCH

C250A02P-GAT

(If installed)

The front fog light is turned on by pushing the switch located in the instrument panel. To turn the front fog light off, push the switch again.
The indicator becomes illuminated when the fog light switch is turned on.
The operation of the rear fog light is identical to the front fog light.
(If installed)

NOTE:
The lights will only function when the headlights are in use.

HAZARD WARNING SYSTEM

B370A01A-AAT

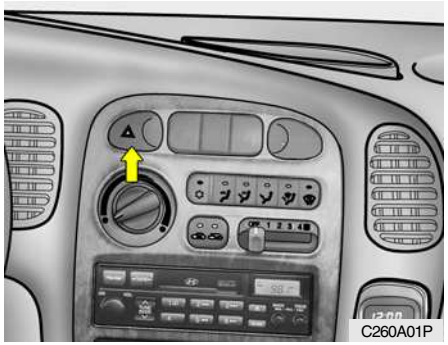

The hazard warning system should be used whenever you find it necessary to stop the car in a hazardous location. When you must make such an emergency stop, always pull off the road as far as possible.
The hazard warning lights are turned on by pushing in the hazard switch. This causes all turn signal lights to blink. The hazard warning lights will operate even though the key is not in the ignition.
To turn the hazard warning lights off, push the switch a second time.

FRONT/REAR WINDOW DEFROSTER SWITCH

B380A02P-AAT

(Minibus/Van)(If installed)

The front/rear window defroster is actuated in connection with the front window defroster.

The window defroster is turned on by pushing in the switch. To turn the defroster off, pushing in the switch a second time. The front/rear window defroster automatically turns itself off after about 20 minutes. To restart the defroster cycle, push in the switch again after it has turned itself off.

NOTE:
The engine must be running for the front/rear window defroster to operate.

CAUTION:
Do not clean the inner side of the front/rear window glass with an abrasive type of glass cleaner or use a scraper to remove the foreign deposits from the inner surface of the glass as this may cause damage to the defroster elements.

CIGARETTE LIGHTER

B420A02A-AAT

For the cigarette lighter to work, the key must be in the "ACC" position or the "ON" position.
To use the cigarette lighter, push it all the way into its socket. When the element has heated, the lighter will pop out to the "ready" position.
Do not hold the cigarette lighter pressed in. This can damage the heating element and create a fire hazard.
If it is necessary to replace the cigarette lighter, use only a genuine Hyundai replacement or its approved equivalent.

CAUTION:
Do not use electric accessories or equipment other than the Hyundai genuine parts in the socket.

POWER OUTLET

B500D08O-GAT

These supply 12V electric power to operate electric accessories or equipment only when the key is in the "ON" or "ACC" position.

CAUTION:
- **Use when the engine is running and remove a plug from the power outlet after using the electric appliance. Using when the engine stops or remaining the electric appliance with plugged in for many hours may cause the battery to be discharged.**
- **Do not use the power outlet to connect electric accessories or equipment other than those designed to operate on 12 volts.**
- **Some electronic devices can cause electronic interference when plugged into the power outlet. These devices may cause excessive audio noise and malfunctions in other electronic systems or devices used in your vehicle.**

B480A01E-AAT

Map Light (Minibus) (If installed)

With Sunroof

SSA1340A

Without Sunroof

C300A01P

The two map light buttons are located on both sides of the front overhead console. Push in the map light button to turn the light on or off. This light produces a spot beam for convenient use as a map light at night or as a personal light for the driver and the passenger.

B490A03E-AAT

Interior Light (Minibus)

With Sunroof

SSA1340B

Without Sunroof

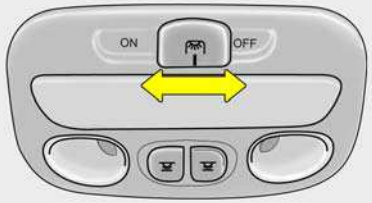

C300A02P

The interior courtesy light has a switch of three positions.

The three positions are:

o DR (•)

In the DR (•) position, the interior courtesy light comes on when any door is opened regardless of the ignition key position. The light goes out when the door is closed.

NOTE:
If your vehicle is equipped with the delay-out interior light, the light goes out gradually within 6 seconds after the door is closed.

o ON

In the "ON" position, the light stays on at all times.

CAUTION:
Do not leave the switch in this position for an extended period time when the vehicle is not running.

o OFF

In the "OFF" position, the light stays off at all times even though a door is open.

C310A02P-GAT
Interior Light (Van/Truck)

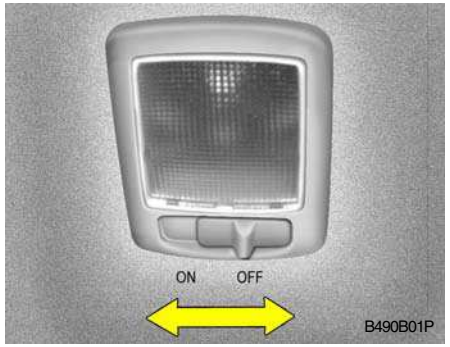

ON : The light illuminates.
OFF : The light goes out.

C320A01P-GAT
Rear Room Light (Minibus)

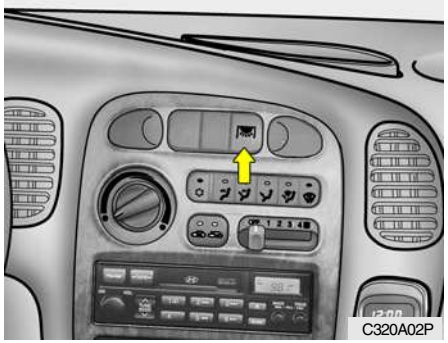

By depressing the main switch in the instrument panel, driver can operate the rear room light.

ON : The lamp illuminates.
- Direct illumination
OFF : The light goes out.
DOOR : The light illuminates when the slide door and/or the tailgate is opened and goes out when it closed.
MOOD : The light illuminates.
- Indirect illumination

C330A01P-GAT
(Van)

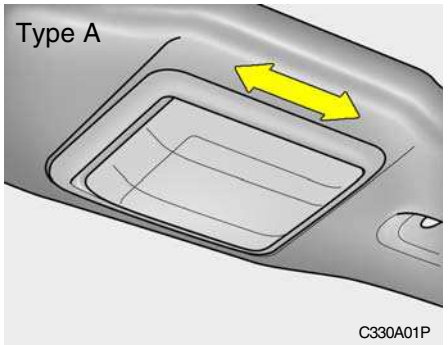

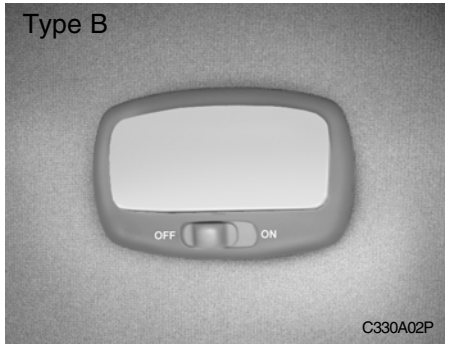

DR(•): The light illuminates when the slide door and/or the tailgate is opened and goes out when it is closed (Type A only).
ON : The light illuminates.
OFF : The light goes out.

SUNROOF

B460A01S-AAT
(Minibus) (If installed)

The sunroof can be operated with the ignition key in the "ON" position.

B470A01S-AAT
SUNSHADE
(Minibus) (If installed)

The sunshade can be opened and closed by sliding it forward or rearward when the sunroof is closed. The sunshade will open automatically when the sunroof is opened, but it must be closed manually.

WARNING:
Never adjust the sunshade while driving.

B460B04P-GAT

OPERATING THE SUNROOF SYSTEM

Opening or closing the sunroof

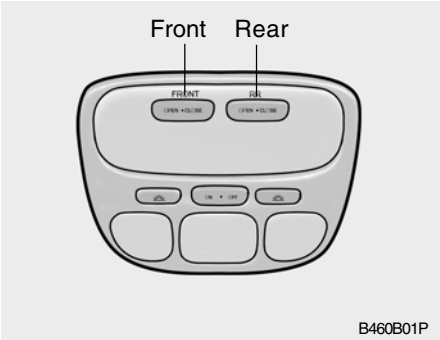

The sunfoof can be electrically opened or closed. To open or close, press and hold the button located in the front of the roof panel. And release the button when the sunfoof reaches the desired position.

In case of closing the rear sunroof, it stops at a half position before full closing. Therefore, release the button and then press and hold it again to close it completely.

WARNING:
- **Do not close a sunroof if anyone's hands, arms or body are between the sliding glass and the sunroof sash, as this could result in injury.**
- **Do not place your head or arms out of the sunroof opening at any time.**
- **While the vehicle is moving, always keep the head, hands and other parts of the body of all occupants away from the roof opening. Otherwise, you could be seriously injured if the vehicle stops suddenly or if the vehicle is involved in an accident.**

CAUTION:
- **Do not open the sunroof in severely cold temperature or when it is covered with ice or snow.**
- **Periodically remove any dirt that may have accumulated on the guide rails.**
- **After washing the car or after there being rain, be sure to wipe off any water that is on the sunroof before operating it.**

B460D01P-GAT

Manual Operation of Sunroof

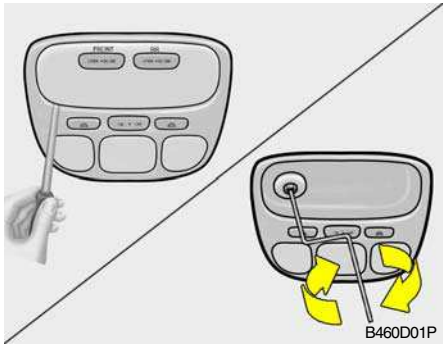

If the sunroof does not electrically operate:

1. Remove the rectangular plastic cover in the front of the roof panel.
2. Insert the hexagonal head wrench into the socket. This wrench can be found in the tool bag at the right corner of the vehicle.
3. Turn the wrench clockwise to open or counterclockwise to close.

B460E01P-GAT

REAR SUNROOF

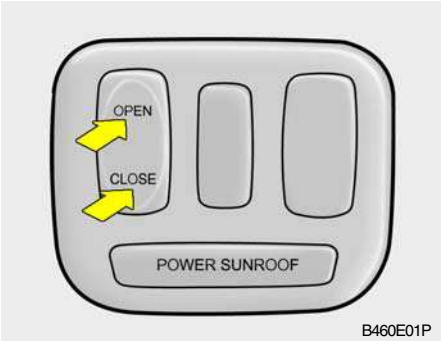

The rear sunroof can be electrically opened or closed. To open or to close, press and hold the button located on the center of the roof panel. Release the button when the sunroof reaches the desired position. As a precaution when closing , it stops at a half position before fully closing. Therefore, release the button and then press it again to close it completely.

Manual Operation of Sunroof

If the sunroof does not electrically operate:

1. Remove the plastic cover in the roof panel.
2. Insert the hexagonal head wrench in to the socket. This wrench can be founded in the tool bag at the right corner of the vehicle.
3. Turn the wrench clockwise to open or counter clockwise to close.

SUNVISOR

B580A01L-AAT

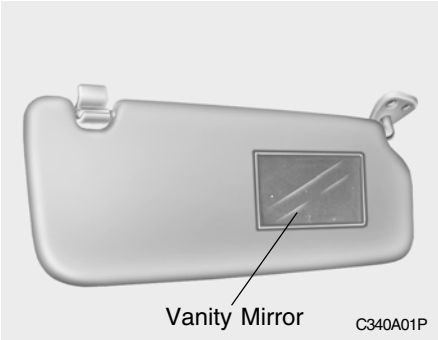

Your Hyundai is equipped with sunvisors to give the driver and front passenger either frontal or sideward shade.
The sunvisors are installed on both sides. To reduce glare or to shut out direct rays of the sun, turn the sunvisor down to block the annoyance.
A vanity mirror is provided on the back of the sunvisor for the front passenger. (If installed)

NOTE:
The Supplemental Restraint System (SRS) label containing useful information can be found on the back of each sunvisor.

WARNING:
Do not place the sunvisor in such a manner that it obscures visibility of the roadway, traffic or other objects.

ROOF RACK

B630A03P-GAT

(Minibus) (If installed)

If your Hyundai has a roof rack, you can load things on top of your vehicle. Crossrails and fixing components to adapt roof rack on your vehicle may be obtained from an authorized Hyundai dealer.
Hyundai dealers are prepared to provide high quality service that may be required.

CAUTION:

- **The following specifications are recommended when loading cargo or luggage.**

ROOF RACK	34 kg (75 lb)

- **Loading cargo or luggage above 34 kg (75 lb) on the roof rack may damage your vehicle.**
  When you carry large objects, never let them hang over the rear or the sides of your vehicle.
- **In case the sunroof is equipped, do not position roof rack loads that could interfere with opening of the sunroof.**
- **To prevent damage or loss of cargo as you are driving, check now and then to make sure the luggage carrier and cargo are still securely fastened.**
- **Always drive your vehicle at a moderate speed.**
- **To use the roof rails as a roof rack, you must fit the roof rails with two or more crossrails or equivalent.**

MIRROR

B520A01A-AAT

DAY/NIGHT INSIDE REARVIEW MIRROR (If installed)

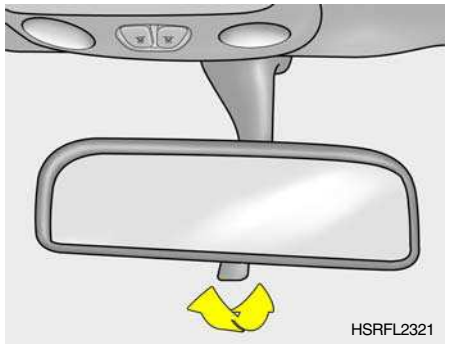

Your Hyundai is equipped with a day/night inside rearview mirror.
The "night" position is selected by flipping the tab at the bottom of the mirror toward you. In the "night" position, the glare of headlights of cars behind you is reduced.

C370A01P-GAT

OUTSIDE REAR VIEW MIRROR Manual Type

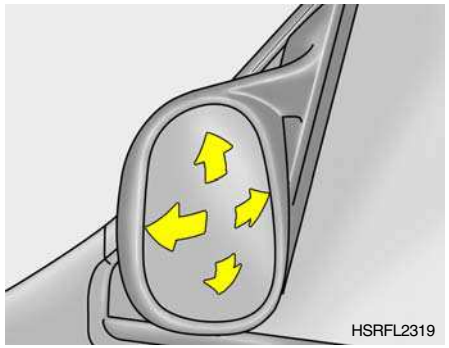

Before driving away, always check that your mirror is positioned so you can see directly behind you. When using the mirror, always exercise caution when attempting to judge the distance of vehicles behind you.

C370B01P-GAT

Electric Type (If installed)

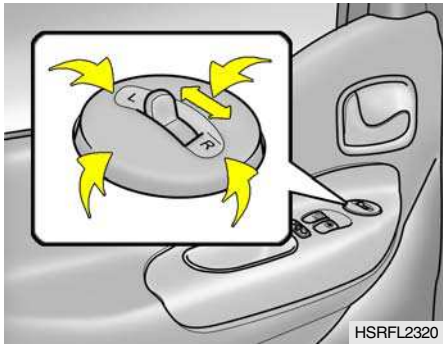

HSRFL2320

The outside rear view mirror can be adjusted in any direction to give the maximum rearview vision.
The remote control outside rear view mirror switch controls the adjustments for both right and left door mirror.

To adjust the position of either mirror:

1. Move the selecting switch to the "R" or "L" position to activate the adjustable mechanism for the adjusting door mirror.
2. Adjust mirror angle by depressing the appropriate perimeter switch as illustrated.

B510D01P-AAT

OUTSIDE REARVIEW MIRROR HEATER (If installed)

B380A01P

The outside rearview mirror heater is actuated in connection with the rear window defroster. To heat the outside rearview mirror glass, push in the switch for the rear window defroster. The rearview mirror glass will be heated for defrosting or defogging and will give you improved rear vision in inclement weather conditions. Push the switch again to turn the heater off. The outside rearview mirror heater automatically turns itself off after 20 minutes.

B450A02P-AAT

Front Drink Holder (If installed)

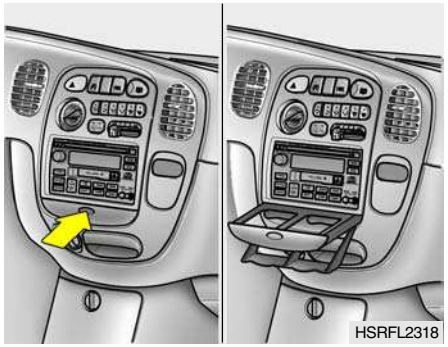
HSRFL2318

The front drink holder is located on the center facia panel for holding cups or cans in its holes. The drink holder can be used by pushing it.

B450A03P-GAT

Rear Drink Holder (If installed)

Type A

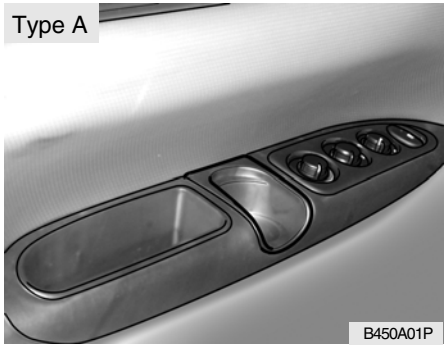

Type B

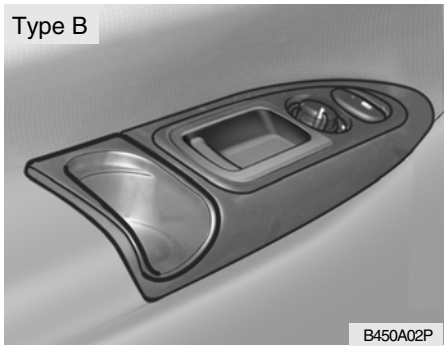

The rear drink holder which are used to hold a cup are located on the quarter trim.

CAUTION:
Place the drink holder in its closed position when not in use.

WARNING:
- **Use caution when using the drink holders. A spilled beverage that is very hot can injure you or your passengers. Spilled liquids can damage interior trim and electrical components.**
- **Do not place anything except drinks in the drink holder. Such objects can be thrown out, possibly injuring persons in the vehicle during sudden braking or in the event of an accident.**

ASHTRAY

C410A01P-GAT

Front ashtray

Pull out the front ashtray to open. To remove the ashtray, pull it out while pressing the stubber.

C420A02P-GAT

Rear ashtray (If installed)

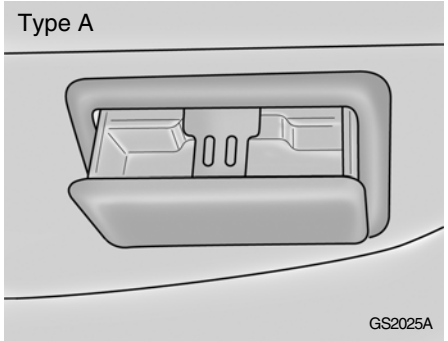

Pull out the rear ashtray downward to open. To remove the ashtray, pull it out while pressing the stubber.

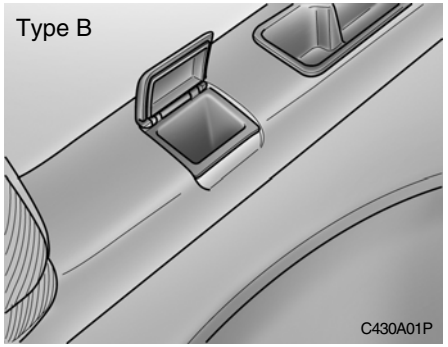

To use the ashtray, open up the lid. To remove the ashtray, open the lid and lift upward holding the lid.

DIGITAL CLOCK

B400A01A-AAT

(If Installed)

There are three control buttons for the digital clock. Their functions are:

HOUR - Push "H" to advance the hour indicated.

MIN - Push "M" to advance the minute indicated.

RESET - Push "R" to reset minutes to ":00" to facilitate resetting the clock to the correct time. When this is done:

Pressing "R" between 10 : 30 and 11 : 29 changes the readout to 11 : 00. Pressing "R" between 11 : 30 and 12 : 29 changes the readout to 12 : 00.

HORN

C280A01P-GAT

Press the pad on the steering wheel to sound the horn.

B710A01P-GAT
(If Installed)

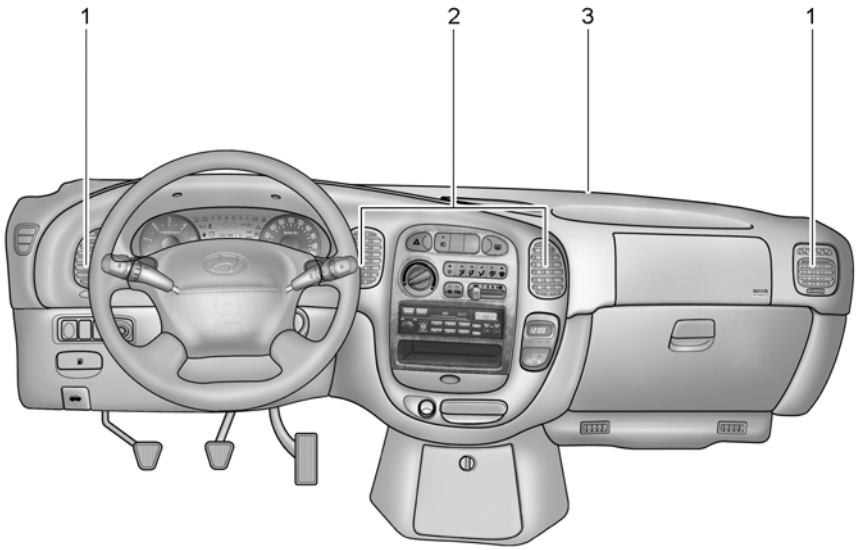

HSRFL002

1. Side Ventilator
2. Center Ventilator
3. Windshield Defrost Nozzle

B710B01S-AAT
CENTER VENTILATOR

The center ventilators are located in the middle of the dashboard. The direction of air flow from the vents in the center of the dashboard is adjustable. To control the direction of the air flow, move the knob in the center of the vent up-and-down and side-to-side.

B710C02HP-AAT
SIDE VENTILATOR

The side ventilators are located on each side of dashboard. To change the direction of the air flow, move the knob in the center of the vent up-and-down and side-to-side. The vents are opened when the vent knob is moved to "≋" position. The vents are closed when the vent knob is moved to "⊠". Keep these vents clear of any obstructions.

HEATING AND VENTILATION

C610A01P-GAT

Rotary and push button type

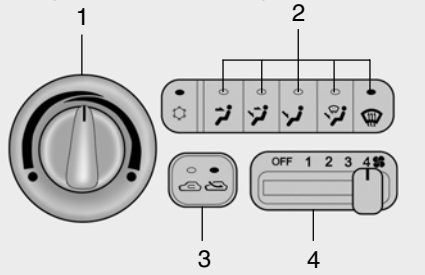

C610A01P

Lever type

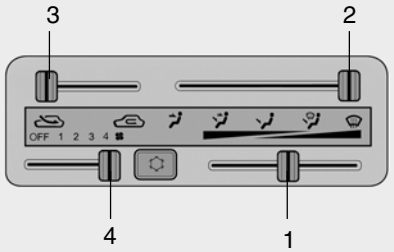

C660A01P

There are four controls for the heating and cooling system. They are:

1. Temperature Control
2. Air Flow Control
3. Air Intake Control
4. Fan Speed Control

B670E01A-AAT

Temperature Control

This control is used to adjust the degree of heating or cooling desired.

B670D01P-AAT

Air Flow Control

This is used to direct the flow of air. Air can be directed to the floor, dashboard outlets, or windshield. Five symbols are used to represent Face, Bi-Level, Floor, Floor-Defrost and Defrost air position.

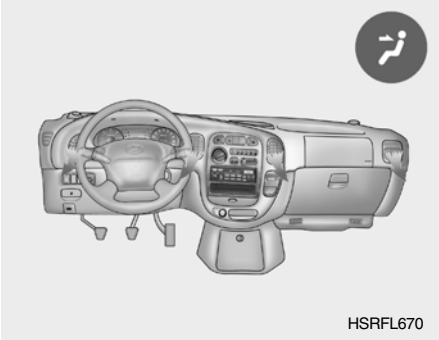

HSRFL670

Face-Level

Selecting the "Face" mode will cause air to be discharged through the face level vents.

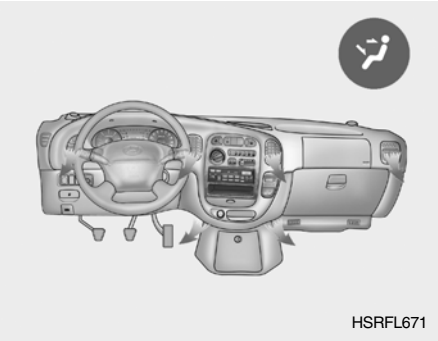

Bi-Level

Air is discharged through the face vents and the floor vents.

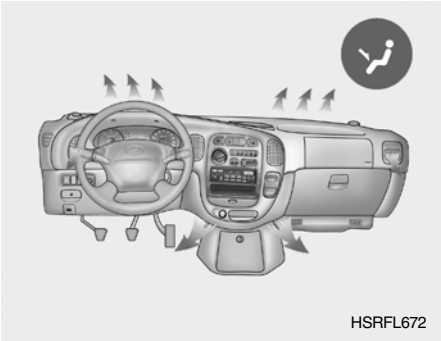

Floor-Level

Air is discharged through the floor vents, windshield defroster nozzle and side ventilator.

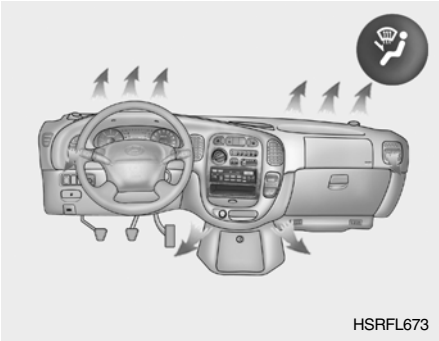

Floor-Defrost Level

Air is discharged through the windshield defrost nozzle, floor vents and side ventilator.
If the "Floor-Defrost" mode is selected, the A/C will turn on automatically and "Fresh" mode will be activated.

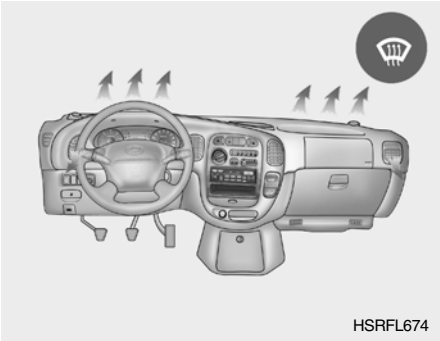

Defrost-Level

Air is discharged through the windshield defroster nozzle and side ventilator.
If the "Defrost" mode is selected, the A/C will turn on automatically and "Fresh" mode will be activated to improve windshield defrosting.

B670C01A-AAT

Air Intake Control

This is used to select fresh outside air or recirculation inside air.

Fresh

Recirculation

With the mode selected, air enters the vehicle from outside and is heated or cooled according to the other functions selected.
With the mode selected, air from within the passenger compartment is drawn through the heating system and heated or cooled according to the other functions selected.

NOTE:
It should be noted that prolonged operation of the heating system in mode will give rise to misting of the windshield and side windows and the air within the passenger compartment will become stale. In addition prolonged use of the air conditioning with the mode selected may result in the air within the passenger compartment becoming excessively dry.

B670B01A-AAT

Fan Speed Control (Blower Control)

This is used to turn the blower fan on or off and to select the fan speed.
This blower fan speed, and therefore the volume of air delivered from the system, may be controlled manually by setting the blower control between the "1" and "4" positions.

HEATING CONTROLS

C620A01P-GAT

For normal heater operation, move the air intake control to the "Fresh" position and the air flow control to the "Floor" position.
For faster heating, the air intake control should be placed in the intermediate position between "Fresh" and "Recirc".
For quickest heating, the control should be in the "Recirc" position.
If the windows fog up, move the air flow control to the "Def" (defroster) position and the air intake control to "Fresh".
For maximum heat, move the temperature control to "Warm".

BI-LEVEL HEATING

C630A01P-GAT

Your Hyundai is equipped with bi-level heating controls. This makes it possible to have cooler air from the dashboard vents and warmer air from the floor outlets at the same time. To use this feature,

- o Set the air intake control at the "Fresh" position.
- o Set the air flow control at the "Bi-Level" position.
- o Set the temperaute control between "Cool" and "Warm"

VENTILATION

C640A01P-GAT

To operate the ventilation system:

- o Set the air intake control to the "Fresh" position.
- o To direct all intake air to the dashboard vents, set the air flow control to the "Face" position.
- o Adjust the fan speed control to the desired speed.
- o Set the temperature control between "Cool" and "Warm".

DEFROSTING/DEFOGGING

C660A02P-GAT

Rotary and push button type

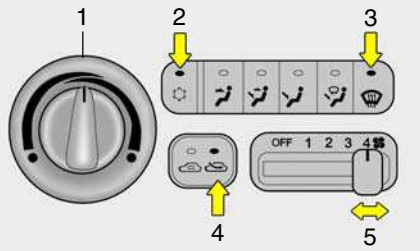

C660B01P

Lever type

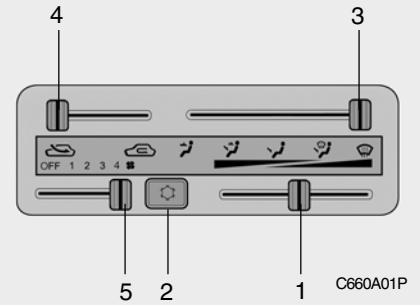

C660A01P

To use the heating/ventilation system to defrost or defog the windshield:

- o Set the air flow control (3) to the "Def" position. (If the "DEF" mode is selected, the A/C will turn on automatically and "Fresh" mode will be activated.)
- o Set the temperature control (1) to a comfortably warm position.
- o Set the fan speed control (5) to position 3 or 4.

NOTE:

In high humidity areas, the A/C can be used with the air intake in the "Recirc" position for increased defogging action.

C670A01P-GAT

Operation Tips

- o To keep dust or unpleasant fumes from entering the vehicle through the ventilation system, temporarily set the air intake control at "Recirc". Be sure to return the control to "Fresh" when the irritation has passed to keep fresh air in the vehicle.
  This will help keep the driver alert and comfortable.
- o Air for the heating/cooling system is drawn in through the grilles just ahead of the windshield. Care should be taken that these are not blocked by leaves, snow, ice or other obstructions.
- o To prevent interior fog on the windshield, set the air intake control to the fresh air ( ) position, fan speed to the desired position, turn on the air conditioning system, and adjust temperature control to desired temperature.

C680A01P-GAT

(If installed) Cooling

Rotary and push button type

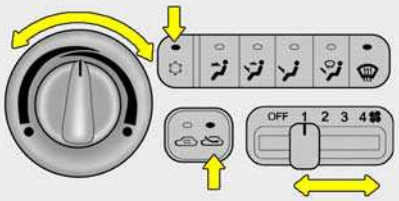

C680A01P

Lever type

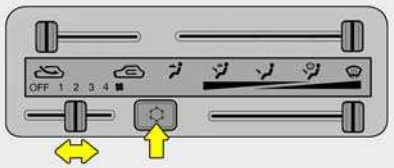

C680A02P

To use the air conditioner to cool interior:

- o Set the side vent control to "OFF", to shut off outside air entry.
- o Turn on the fan control switch.
- o Turn on the air conditioner switch by pushing in on the switch. The air conditioner indicator light should come on at the same time.
- o Set the air intake control to the "Fresh" position.
- o Set the temperature control to the "Cool" position.
  ("Cool" provides maximum cooling. The temperature may be moderated by moving the control toward "Warm".)
- o Adjust the fan control to the desired speed. For greater cooling, turn the fan control to one of the higher speeds or temporarily select the "Recirc" position on the air intake control.

C690A01P-GAT

Dehumidified heating

Rotary and push button type

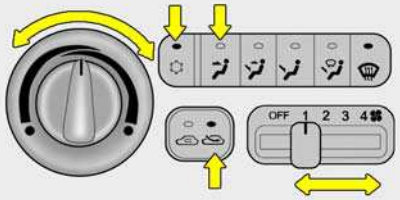

C690A01P

Lever type

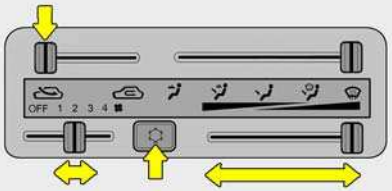

C690A02P

For dehumidified heating:

- o Turn on the fan control switch.
- o Turn on the air conditioner switch by pushing in on the switch. The air conditioner indicator light should come on at the same time.
- o Set the air intake control to the "Fresh".
- o Set the air flow control to the "Face".
- o Adjust the fan control to the desired speed. For more rapid action, set the fan at one of the higher speeds.
- o Adjust the temperature control to provide the desired amount of warmth.

C700A01P-GAT

Operation Tips

- o If the interior of the vehicle is hot when you first get in, open the windows for a few minutes to expel the hot air.
- o When you are using the air conditioning system, keep all windows closed to keep hot air out.
- o When you must drive slowly, as in heavy traffic, shift to a lower gear. This increases engine speed, which in turn increases the speed of the air conditioning compressor.
- o When driving up long grades, turn occasionally the air conditioner off to avoid the possibility of the engine overheating.
- o During winter months or in periods when the air conditioner is not used regularly, turn on the air conditioner switch occasionally for a few minutes. This will help circulate the lubricants and keep your system in peak operating condition.

C710A01P-GAT

(If installed)

The rear heater can be operated with the ignition switch at the "ON" position by depressing the main switch in the instrument panel.

C720A01P-GAT

Main switch for the rear heater

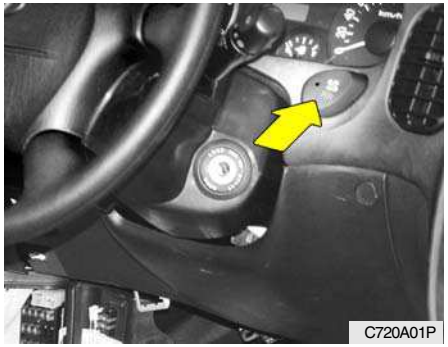

The main switch for the rear heater is installed in the instrument panel.
The main switch should be used to switch the power of the rear heater "ON" and "OFF".
The power is switched "ON" when the button is pressed, and the lamp within the switch is illuminated. Illumination will stop and the power will be switched "OFF" when the button is pressed once again.

C730A02P-GAT

Control panel

Rotary type (A)

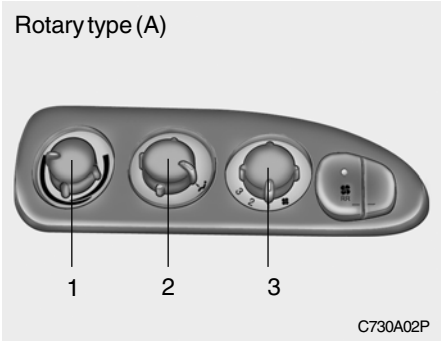

Rotary type (B)

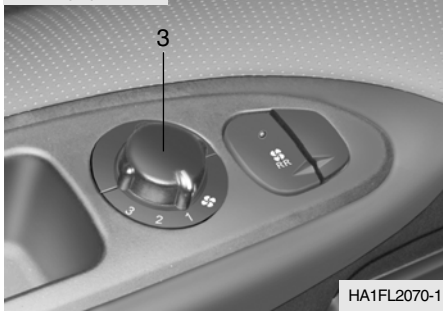

Lever type

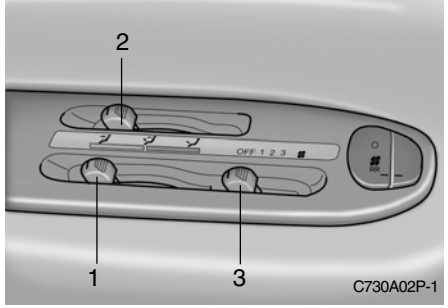

1. Temperature controller

Rotary type- Select the desired temperature by turn the knob left or right.
Lever type - Select the desired temperature by sliding the lever left or right.

Red - High temperaute (heating)
Blue - Ambient temperature (ventilating)

2. Mode selector lever

Air flow can be switched in three modes.
Three symbols are used to represent Floor level, Bi-level and Face level.

3. **Blower controller**
   The blower can be operated (when the ignition key and main switch for the rear heater is at the "ON" position) at three speeds to regulate the amount of air forced through the vehicle.
   The blower speed will increase as the switch is moved to the right.

C740A02P-GAT

Rear Air Conditioning (If installed)

The rear air conditioner can be operated with the ignition switch at the "ON" position by depressing the main switch in the instrument panel.

1. Air conditioning switch
   The air conditioning is turned on or off by pushing the air conditioning button.
2. The operations of the rear air conditioner is identical to air conditioner operation of page 2-45.

OVERHEAD AIR CONDITIONING

C750A03P-GAT

(If installed)

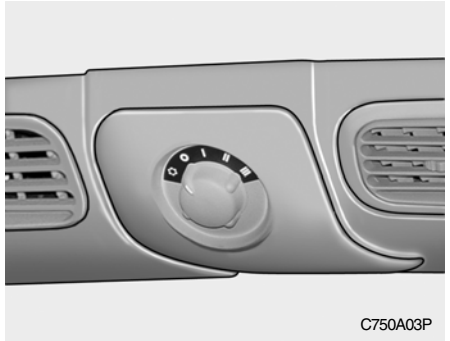

The overhead air conditioner can be operated with the ignition switch at the "ON" position by depressing the main switch in the instrument panel.

Blower knob

The blower can be operated at three speeds to regulate the amount of air forced through the vehicle. The overhead air conditioner will not operate if the knob is set to the "O".
The blower speed will increase as the knob is moved to the right.

CLIMATE CONTROL AIR FILTER (FOR EVAPORATOR AND BLOWER UNIT)

B760A05P-GAT

(Minibus/van)

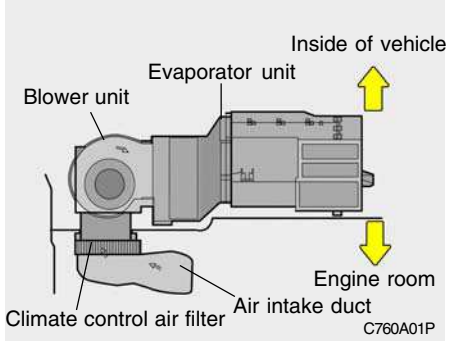

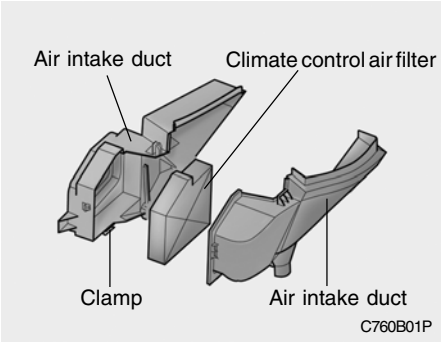

The climate control air filter is located in the air intake duct behind the windshield washer reservoir.
It operates to decrease the amount of pollutants entering the car.
To replace the climate control air filter, refer to the page 8-16.

CAUTION:

- **Replace the filter every 15,000 km (10,000 miles) or once a year. If the car is being driven in severe conditions such as dusty, rough roads, more frequent climate control air filter inspections and changes are required.**
- **When the air flow rate is suddenly decreased, it must be checked at authorized dealer.**

STEREO SOUND SYSTEM

B750A02A-AAT

How Car Audio Works

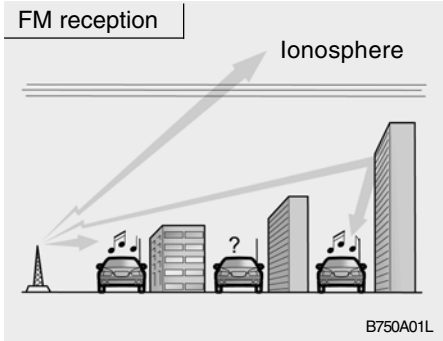

AM and FM radio signals are broadcast from transmitter towers located around your city. They are intercepted by the radio antenna on your car. This signal is then received by the radio and sent to your car speakers.

When a strong radio signal has reached your vehicle, the precise engineering of your audio system ensures the best possible quality reproduction. However, in some cases the signal coming to your vehicle may not be strong and clear. This can be due to factors such as the distance from the radio station, closeness of other strong radio stations or the presence of buildings, bridges or other large obstructions in the area.

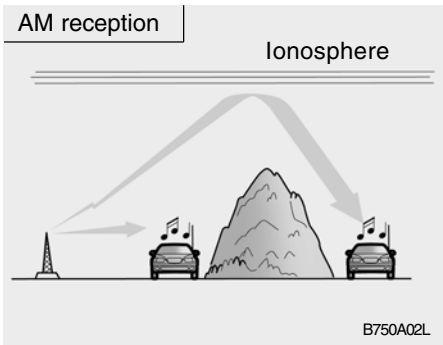

AM broadcasts can be received at greater distances than FM broadcasts. This is because AM radio waves are transmitted at low frequencies. These long, low frequency radio waves can follow the curvature of the earth rather than travelling straight out into the atmosphere. In addition, they curve around obstructions so that they can provide better signal coverage.

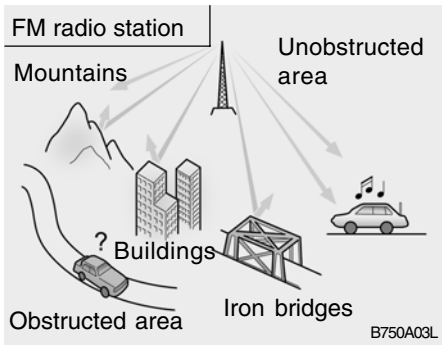

FM broadcasts are transmitted at high frequencies and do not bend to follow the earth's surface. Because of this, FM broadcasts generally begin to fade at short distances from the station. Also, FM signals are easily affected by buildings, mountains, or other obstructions. These can result in certain listening conditions which might lead you to believe a problem exists with your radio. The following conditions are normal and do not indicate radio trouble:

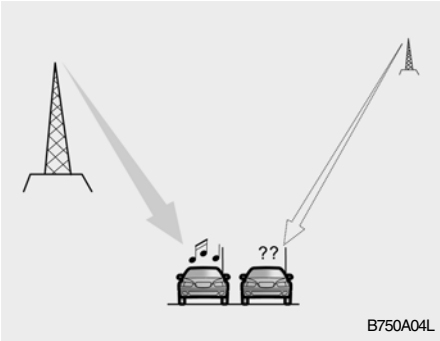

- Fading - As your car moves away from the radio station, the signal will weaken and sound will begin to fade. When this occurs, we suggest that you select another stronger station.
- Flutter/Static - Weak FM signals or large obstructions between the transmitter and your radio can disturb the signal causing static or fluttering noises to occur. Reducing the treble level may lessen this effect until the disturbance clears.

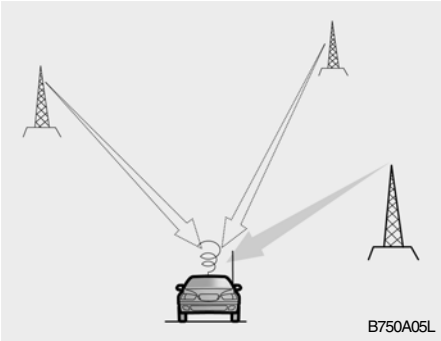

- Station Swapping - As a FM signal weakens, another more powerful signal near the same frequency may begin to play. This is because your radio is designed to lock onto the clearest signal. If this occurs, select another station with a stronger signal.
- Multi-Path Cancellation - Radio signals being received from several directions can cause distortion or fluttering. This can be caused by a direct and reflected signal from the same station, or by signals from two stations with close frequencies. If this occurs, select another station until the condition has passed.

B750B02Y-AAT

Using a cellular phone or a two-way radio

When a cellular phone is used inside the vehicle, noise may be produced from the audio equipment. This does not mean that something is wrong with the audio equipment. In such a case, use the cellular phone at a place as far as possible from the audio equipment.

CAUTION:
When using a communication system such a cellular phone or a radio set inside the vehicle, a separate external antenna must be fitted. When a cellular phone or a radio set is used with an internal antenna alone, it may interfere with the vehicle's electrical system and adversely affect safe operation of the vehicle.

WARNING:
Don't use a cellular phone when you are driving. Stop at a safe place to use a cellular phone.

H240A01O-GAT

STEREO RADIO OPERATION (H240) (If installed)

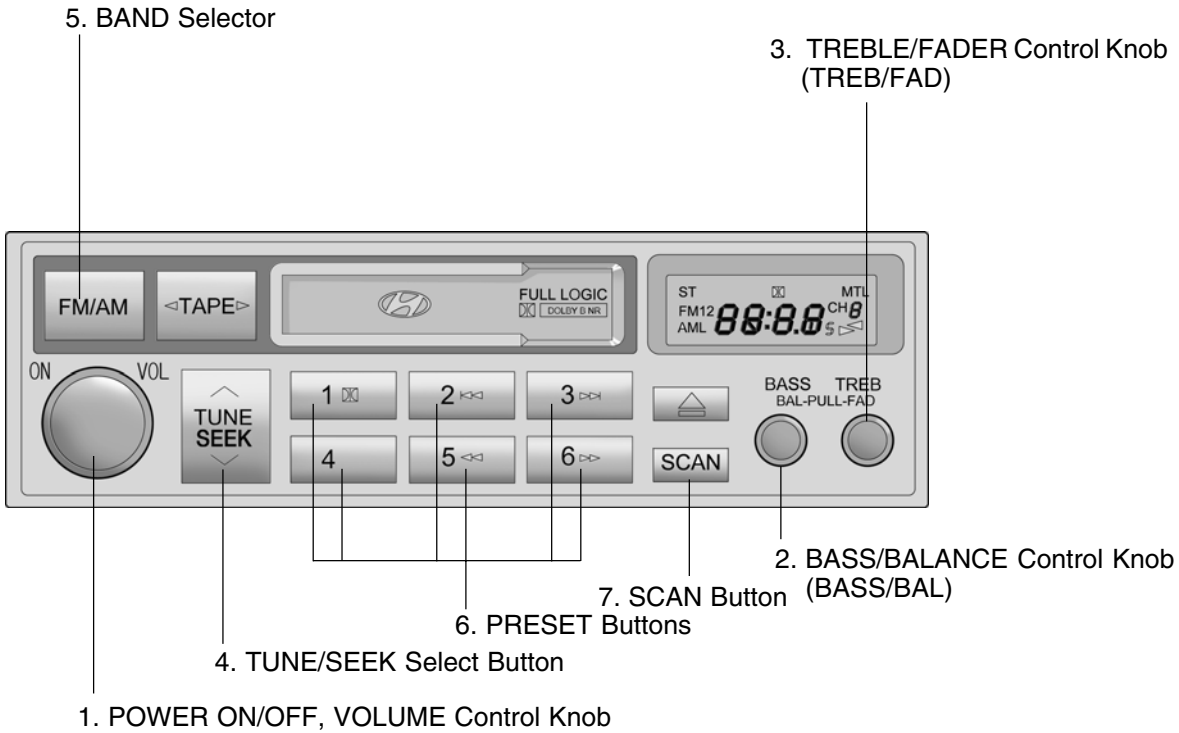

H240A01O

H240B03O-GAT

1. POWER ON-OFF Control Knob

The radio unit may be operated when the ignition key is in the "ACC" or "ON" position. Press the knob to switch the power on. The LCD shows the radio frequency in the radio mode or the tape direction indicator in the tape mode. To switch the power off, press the knob again.

VOLUME Control

Rotate the knob clockwise to increase the volume and turn the knob counterclockwise to reduce the volume.

2. BASS Control Knob

Press to pop the knob out and turn to the left or right for the desired bass tone.

BAL (Balance Control) Knob

Pull the bass control knob further out. Turn the control knob clockwise to emphasize right speaker sound (left speaker sound will be attenuated).
When the control knob is turned counterclockwise, left speaker sound will be emphasized (right speaker sound will be attenuated).

3. TREB (Treble Control) Knob

Press to pop the knob out and turn to the left or right for the desired treble tone.

FAD (Fader Control) Knob

Pull the treble control knob further out. Turn the control knob counterclockwise to emphasize front speaker sound (rear speaker sound will be attenuated).
When the control knob is turned clockwise, rear speaker sound will be emphasized (front speaker sound will be attenuated).

4. TUNE (Manual) Select Button

Press the (∧) side or (∨) side to increase or to decrease the frequency. Press either button and hold down to continuously scroll. Release button once the desired station is reached.

SEEK Operation (Automatic Channel Selection)

Press the TUNE select button 0.5 sec or more. Releasing it will automatically tune to the next available station with a beep sound.
When the (∧) side is pressed longer than 0.5 second, releasing will automatically tune to the next higher frequency and when the (∨) side is pressed longer than 0.5 second and releasing will automatically tune to the next lower frequency.

5. BAND Selector

Pressing the FM/AM button changes the AM, FM1 and FM2 bands. The mode selected is displayed on LCD.

6. PRESET station select button

Six (6) stations for AM, FM1 and FM2 respectively can be preset in the electronic memory circuit on this unit.

HOW TO PRESET STATIONS

Six AM and twelve FM stations may be programmed into the memory of the radio. Then, by simply pressing the band select button and/or one of the six station select buttons, you may recall any of these stations instantly. To program the stations, follow these steps:

- o Press band selector to set the band for AM, FM1, or FM2.
- o Select the desired station to be stored by seek or manual tuning.
- o Determine the preset station select button you wish to use to access that station.
- o Press the station select button for more than two seconds. A select button indicator will show in the display indicating which select button you have depressed. The frequency display will flash after it has been stored into the memory with beep sound. You should then release the button, and proceed to program the next desired station. A total of 18 stations can be programmed by selecting one AM and two FM stations per button.
- o When completed, any preset station may be recalled by selecting AM, FM1 or FM2 band and the appropriate station button.

7. SCAN Button

When the scan button is pressed, the frequency will be increased and the receivable stations will be tuned in one after another, receiving each station for 5 seconds. To stop scanning, press the scan button again.

CAUTION:

- **o Do not place beverages close to the audio system. The playback mechanism may be damaged if you spill them.**
- **o Do not impact on the audio system, or the playback mechanism could be damaged.**

H240C01O-GAT

CASSETTE TAPE PLAYER OPERATION (H240) (If installed)

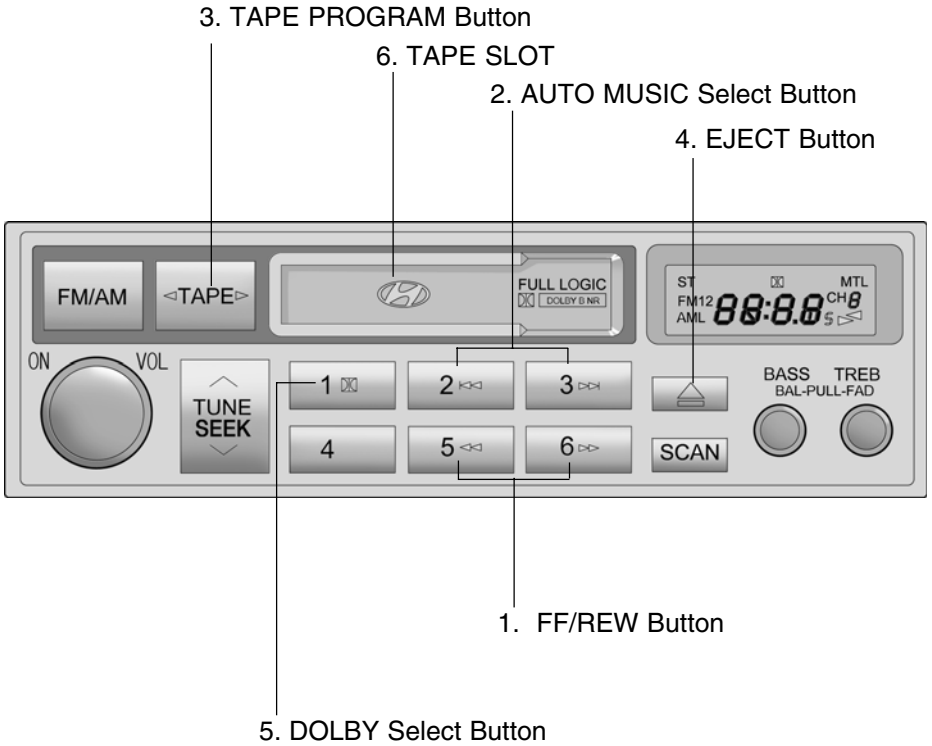

H240A01O

H240A03O-GAT

1. FF/REW Button

- o The FF (fast forward tape winding) starts when the ▶▶ button is pressed during the PLAY or REW.
- o The play starts when the ▶▶ button is pressed again during the FF.
- o The REW (rewinding) starts when the ◀◀ button is pressed during the PLAY or FF.
- o The play starts when the ◀◀ button is pressed again during the REW.

2. AUTO MUSIC Select Button

Press the button to find the starting point of each song in a prerecorded music tape.
The quiet space between songs (must have at least a 4 sec. gap) can be identified by the AUTO MUSIC SELECT button.

- o Pressing the ▶▶| button will play the beginning of the next music segment.
- o Pressing the |◀◀ button will start replay at the beginning of the music just listened to.

3. TAPE PROGRAM Button

This allows you to play the reverse side of the tape by merely depressing the program button.
An arrow will appear in the display to show tape direction.

NOTE:

When tape operation is abnormal or ER8 fault code is displayed, press the eject button more than 5 seconds to reset the deck function.

4. EJECT BUTTON

- o When the EJECT button is pressed with the cassette loaded, the cassette is ejected.
- o When the EJECT button is pressed during the FF/REW, the cassette is ejected.

5. DOLBY Select Button

If you get background noise during PLAY, you can reduce this considerably by merely pressing DOLBY SELECT button.
If you want to release, press the button again.

CAUTION:

- **o Do not insert anything like coins into the player slot as damage to the unit may occur.**
- **o Do not place beverages close to the audio system. The playback mechanism may be damaged if you spill them.**
- **o Do not impact on the audio system, or the playback mechanism could be damaged.**

H260A01O-AAT

STEREO RADIO OPERATION (H260) (If installed)

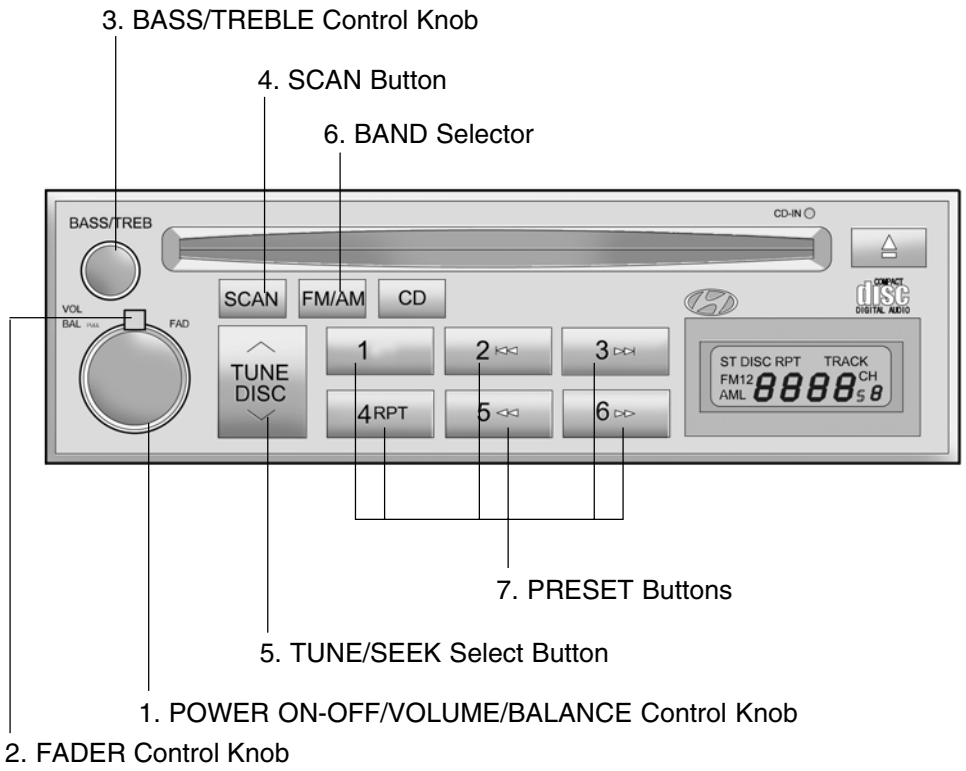

H260A01O

H260B03E-AAT

1. POWER ON-OFF Control Knob

The radio unit may be operated when the ignition key is in the "ACC" or "ON" position. Press the knob to switch the power on. The LCD shows the radio frequency in the radio mode or the CD track indicator in either the CD mode. To switch the power off, press the knob again.

VOLUME Control

Rotate the knob clockwise to increase the volume and turn the knob counterclockwise to reduce the volume.

BALANCE Control

Pull and turn the control knob clockwise to emphasize right speaker sound (left speaker sound will be attenuated). When the control knob is turned counterclockwise, left speaker sound will be emphasized (right speaker sound will be attenuated).

2. FAD (Fader Control) Knob

Turn the control knob counterclockwise to emphasize front speaker sound (rear speaker sound will be attenuated). When the control knob is turned clockwise, rear speaker sound will be emphasized (front speaker sound will be attenuated).

3. BASS Control Knob

Press to pop the knob out and turn to the left or right for the desired bass tone.

TREB (Treble Control) Knob

Pull the bass control knob further out. Turn to the left or right for the desired treble tone.

4. SCAN Button

When the scan button is pressed, the frequency will increase and the receivable stations will be tuned in one after another, receiving each station for 5 seconds. To stop scanning, press the scan button again.

5. TUNE (Manual) Select Button

Press the (∧) side or (∨) side to increase or to decrease the frequency. Press either button and hold down to continuously scroll. Release button once the desired station is reached.

SEEK Operation (Automatic Channel Selection)

Press the TUNE select button for 0.5 sec or more. Releasing it will automatically tune to the next available station with a beep sound.
When the (∧) side is pressed longer than 0.5 second, releasing will automatically tune to the next higher frequency and when the (∨) side is pressed longer than 0.5 second, releasing will automatically tune the next lower frequency.

6. BAND Selector

Pressing the FM/AM button changes the AM, FM1 and FM2 bands. The mode selected is displayed on LCD.

7. PRESET Station Select Button

Six (6) stations for AM, FM1 or FM2 respectively can be preset in the electronic memory circuit on this unit.

HOW TO PRESET STATIONS

Six AM and twelve FM stations may be programmed into the memory of the radio. Then, by simply pressing the band select button and/or one of the six station select buttons, you may recall any of these stations instantly. To program the stations, follow these steps:

- o Press band selector to set the band for AM, FM1 or FM2.
- o Select the desired station to be stored by seek, scan or manual tuning.
- o Determine the preset station select button you wish to use to access that station.
- o Press the station select button for more than two seconds. A select button indicator will show in the display indicating which select button you have depressed. The frequency display will flash after it has been stored into the memory.
  You should then release the button, and proceed to program the next desired station. A total of 18 stations can be programmed by selecting one AM and two FM stations per button.
- o When completed, any preset station may be recalled by selecting AM, FM1 or FM2 band and the appropriate station button.

CAUTION:

- **o Do not place beverages close to the audio system. The playback mechanism may be damaged if you spill them.**
- **o Do not impact on the audio system, or the playback mechanism could be damaged.**

H260B01O-AAT

COMPACT DISC PLAYER OPERATION (H260) (If installed)

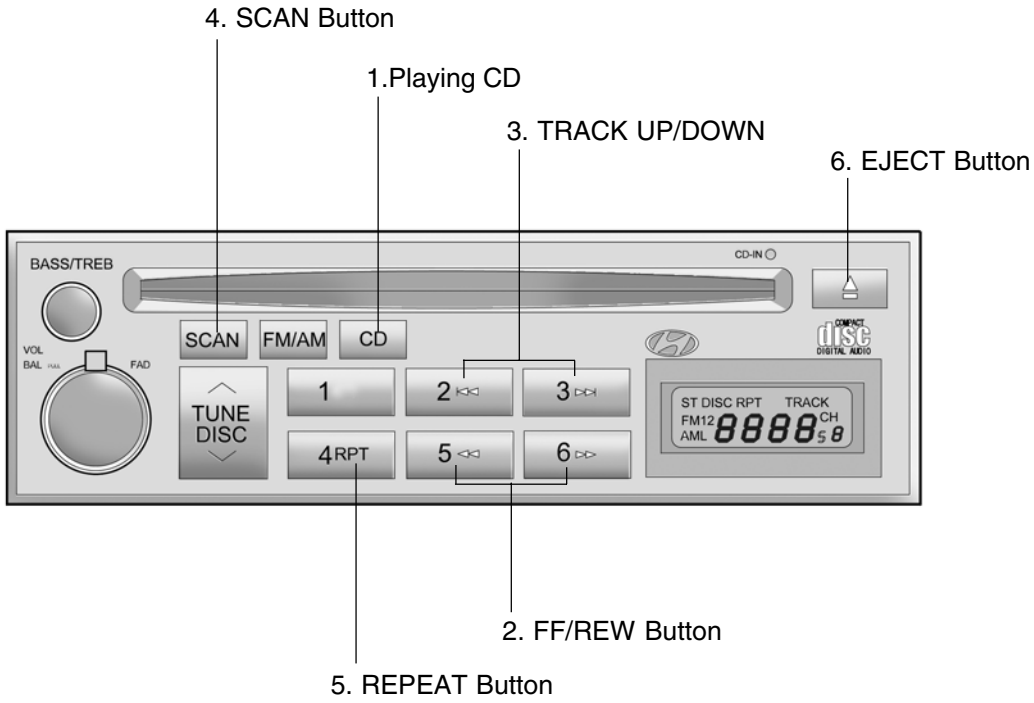

H260A01O

B260D03O-AAT

1. Playing CD

- o Insert the CD with the label facing upward.
- o Insert the CD to start CD playback, during radio operation.
- o When a disc is in the CD deck, if you press the CD button, the CD player will begin playing even if the radio is being used.
- o The CD player can be used when the ignition switch is in either the "ON" or "ACC" position.

2. FF/REW (▶▶/◀◀)

If you want to fast forward or reverse through the compact disc track, push and hold in the FF (▶▶) or REW (◀◀) button.
When you release the button, the compact disc player will resume playing.

3. TRACK UP/DOWN

- o The desired track on the disc currently being played can be selected using the track number.
- o Press ▶▶| once to skip forward to the beginning of the next track.
  Press |◀◀ once to skip back to the beginning of the track.

4. SCAN Button

- o Press the SCAN button to playback the first 10 seconds of each track.
- o Press the SCAN button again within 10 sec. When you have reached the desired track.

5. REPEAT Button

- o To repeat the track you are currently listening to, press the RPT button. To cancel , press again.
- o If you do not release RPT operation when the track ends, it will automatically be replayed.
  This process will be continued until you push the button again.

6. EJECT Button

When the EJECT button ⏏ is pressed with a CD loaded, the CD will eject.

NOTE:

- **o To assure proper operation of the unit, keep the vehicle interior temperature within a normal range by using the vehicle's air conditioning or heating system.**
- **o When replacing the fuse, replace it with a fuse having the correct capacity.**
- **o The preset station frequencies are all erased when the car battery is disconnected. Therefore, all data will have to be set again if this should occur.**
- **o Do not add any oil to the rotating parts. Keep magnets, screwdrivers and other metallic objects away from the tape mechanism and head.**
- **o This equipment is designed to be used only in a 12 volt DC battery system with negative ground.**

- This unit is made of precision parts. Do not attempt to disassemble or adjust any parts.
- When driving your vehicle, be sure to keep the volume of the unit set low enough to allow you to hear sounds coming from the outside.
- Do not expose this equipment (including the speakers) to water or excessive moisture.

CAUTION:

- Do not insert warped or poor quality discs into the CD player as damage to the unit may occur.
- Do not insert anything like coins into the player slot as damage to the unit may occur.
- Do not place beverages close to the audio system. The playback mechanism may be damaged if you spill them.
- Do not impact on the audio system, or the playback mechanism could be damaged.
- Driving on the off-roads or other vibrations may skip your compact disc.
  Do not use the audio system on off-roads as the discs could be scratched and damaged.
- Do not grip or pull out the disc with your hand while the disc is being pulled into the unit by the self loading mechanism. These can cause poor disc scratching to occur or trouble in the compact disc player.

- Avoid using CD-Recordable or CD-Rewritable as the player could not be operated in recording way of the CD maker. When using the compact disc player, genuine CDs are recommended.

H290A01E-GAT

STEREO RADIO OPERATION (H280) (If installed)

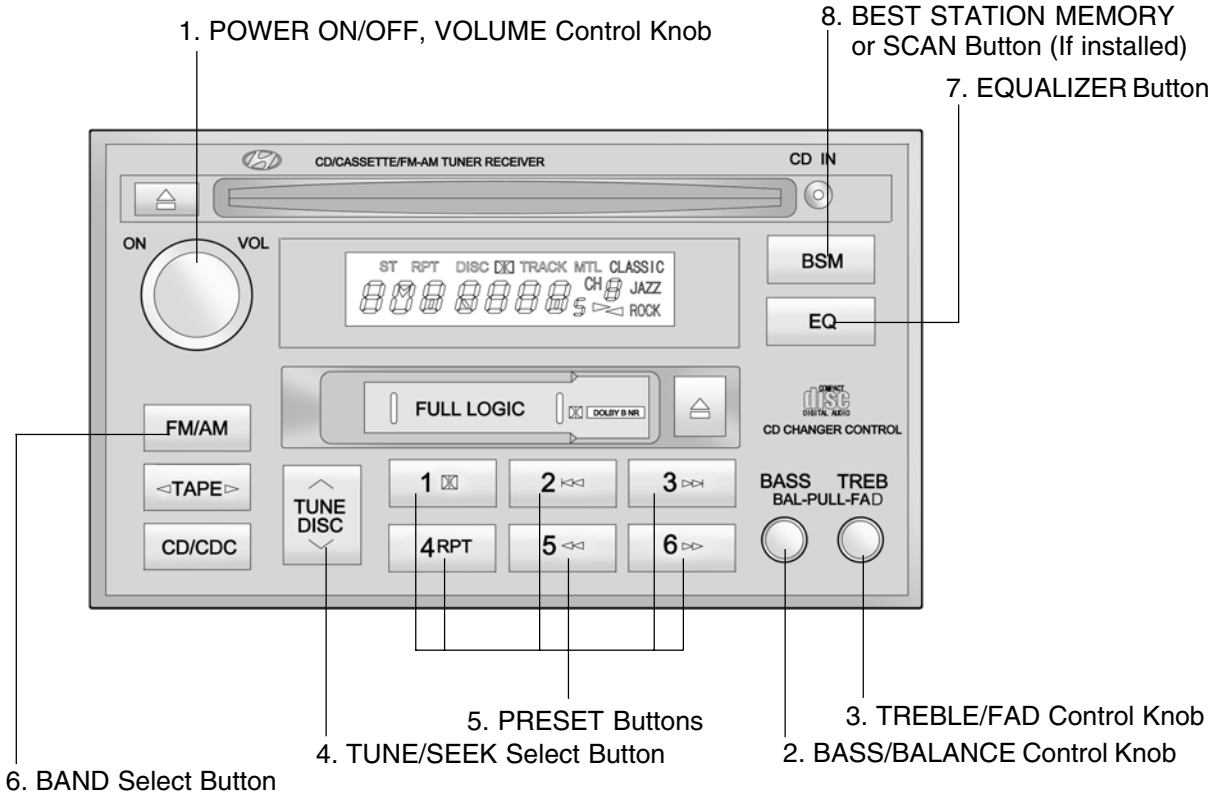

H290A01O

H290B03E-GAT

1. POWER ON-OFF Control Knob

The radio unit may be operated when the ignition key is in the "ACC" or "ON" position. Press the button to switch the power on. The display shows the radio frequency in the radio mode, the tape direction indicator in the tape mode or CD track in either the CD mode. To switch the power off, press the button again.

VOLUME Control

Rotate the knob clockwise to increase the volume and turn the knob counterclockwise to reduce the volume.

2. BASS/BALANCE Control Knob

BASS Control Knob

Press to pop the knob out. To increase the bass, rotate the knob clockwise, while to decrease the bass, rotate the knob counterclockwise.

BALANCE Control knob

Pull the Bass control knob out further. Rotate the knob clockwise to emphasize right speaker sound (left speaker sound will be attenuated). When the control knob is turned counterclockwise, left speaker sound will be emphasized (right speaker sound will be attenuated).

3. TREBLE/FAD Control Knob TREBLE Control Knob

Press to pop the knob out and turn to the left or right for the desired treble tone.

FAD (Fader Control) Knob

Pull the Treble control knob out further. Turn the control knob counterclockwise to emphasize front speaker sound (rear speaker sound will be attenuated). When the control knob is turned clockwise, rear speaker sound will be emphasized (front speaker sound will be attenuated).

4. TUNE (Manual) Select Button

Press the (∧) side or (∨) side to increase or to decrease the frequency. Press either button and hold down to continuously scroll. Release button once the desired station is reached.

SEEK Operation (Automatic Channel Selection)

Press the TUNE select button for 0.5 sec or more. Releasing it will automatically tune to the next available station with a beep sound.
When the (∧) side is pressed longer than 0.5 second and releasing will automatically tune to the next higher frequency and when the (∨) side is pressed longer than 0.5 second, releasing will automatically tune to the next lower frequency.

5. PRESET Station Select Buttons

Six (6) stations for AM, FM1 and FM2 respectively can be preset in the electronic memory circuit.

HOW TO PRESET STATIONS

Six AM and twelve FM stations may be programmed into the memory of the radio. Then, by simply pressing the band select button and/or one of the six station select buttons, you may recall any of these stations instantly. To program the stations, follow these steps:

- o Press band selector to set the band for AM, FM1 or FM2.
- o Select the desired station to be stored by seek or manual tuning.
- o Determine the preset station select button you wish to use to access that station.
- o Press the station select button for more than two seconds. A select button indicator will show in the display indicating which select button you have depressed. The frequency display will flash after it has been stored into the memory with beep sound. You should then release the button, and proceed to program the next desired station. A total of 18 stations can be programmed by selecting one AM and two FM station per button.
- o When completed, any preset station may be recalled by selecting AM, FM1 or FM2 band and the appropriate station button.

6. BAND Selector

Pressing the FM/AM button changes the AM, FM1 and FM2 bands. The mode selected is shown on the display.

7. EQUALIZER Button

Press the EQ button to select the CLASSIC, JAZZ, ROCK and DEFEAT MODE for the desired tone quality. Each press of the button changes the display as follows;

CLASSIC → JAZZ → ROCK → DEFEAT

8. BEST STATION MEMORY Button (BSM) (If installed)

When the BSM button is pressed for two seconds or longer, the six channels from the highest field intensity are selected next and stored in memory. The stations selected are stored in the sequence frequency from the first preset key.

SCAN Button (If installed)

When the scan button is pressed, the frequency will increase and the receivable stations will be tuned in one after another, receiving each station for 5 seconds. To stop scanning, press the scan button again.

CAUTION:

- **o Do not place beverages close to the audio system. The playback mechanism may be damaged if you spill them.**
- **o Do not impact on the audio system, or the playback mechanism could be damaged.**

H290C01E-GAT

CASSETTE TAPE PLAYER OPERATION (H280) (If installed)

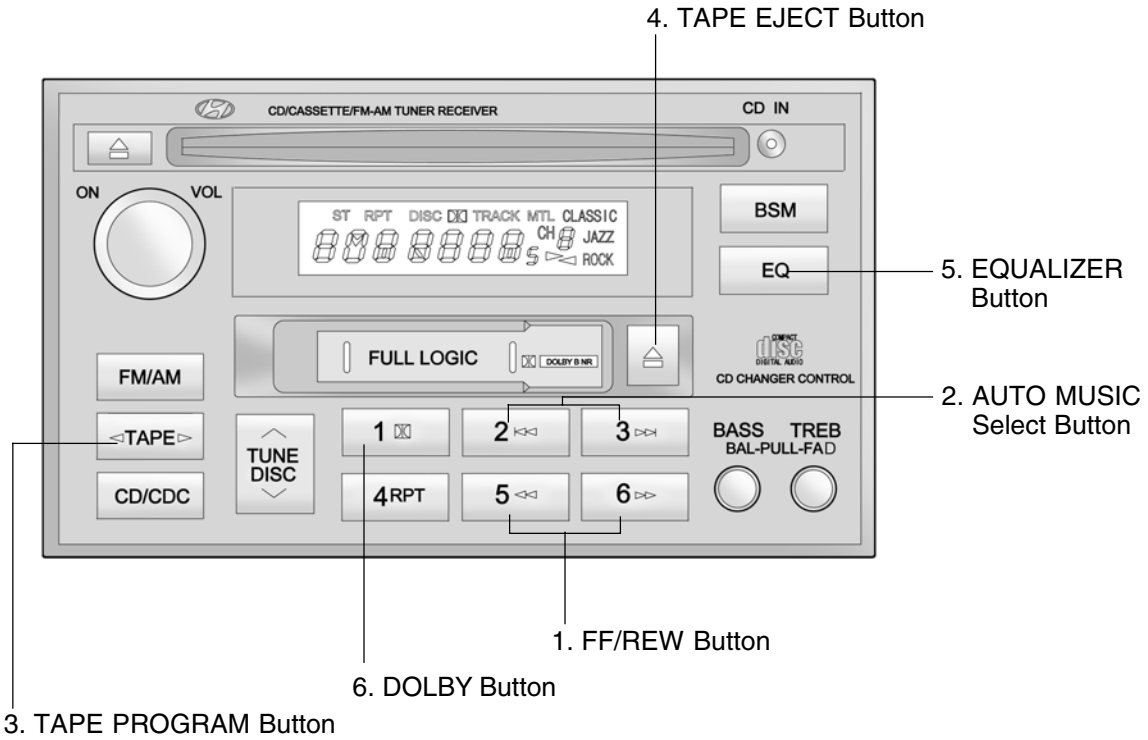

H290A01O

H290D02O-GAT

1. FF/REW Button

- o Fast forward tape winding starts when the FF (▶▶) button is pressed during the PLAY or REW mode.
- o Tape play starts when the FF (▶▶) button is pressed again during the FF mode.
- o Tape rewinding starts when the REW (◀◀) button is pressed during the PLAY or FF mode.
- o Tape play starts when the REW (◀◀) button pressed again during the REW mode.

2. AUTO MUSIC Select Button

Press the button to find the starting point of each song in a prerecorded music tape. The quiet space between songs (must have at least a 4 sec. gap) can be identified by the AUTO MUSIC Select button.

- o Pressing the ▶▶| button will play the beginning of the next music segment.
- o Pressing the |◀◀ button will start replay at the beginning of the music just listened to.

3. TAPE PROGRAM Button

This allows you to play the reverse side of the tape by merely depressing the program button. An arrow will appear in the display to show tape direction.

4. TAPE EJECT button

- o When the ⏏ button is pressed with the cassette loaded, the cassette is ejected.
- o When the ⏏ button is pressed during the FF/REW mode, the cassette is ejected.

5. EQ Button

Press the EQ button to select the CLASSIC, JAZZ, ROCK and DEFEAT MODE for the desired tone quality. Each press of the button changes the display as follows;

CLASSIC → JAZZ → ROCK → DEFEAT

6. DOLBY Button

If you get background noise during tape PLAY, you can reduce this considerably by merely pressing the DOLBY button. If you want to cancel the DOLBY feature, press the button again.

CAUTION:

- **o Do not insert anything like coins into the player slot as damage to the unit may occur.**
- **o Do not place beverages close to the audio system. The playback mechanism may be damaged if you spill them.**
- **o Do not impact on the audio system, or the playback mechanism could be damaged.**

H290E01E-GAT

COMPACT DISC PLAYER OPERATION (H280) (If installed)

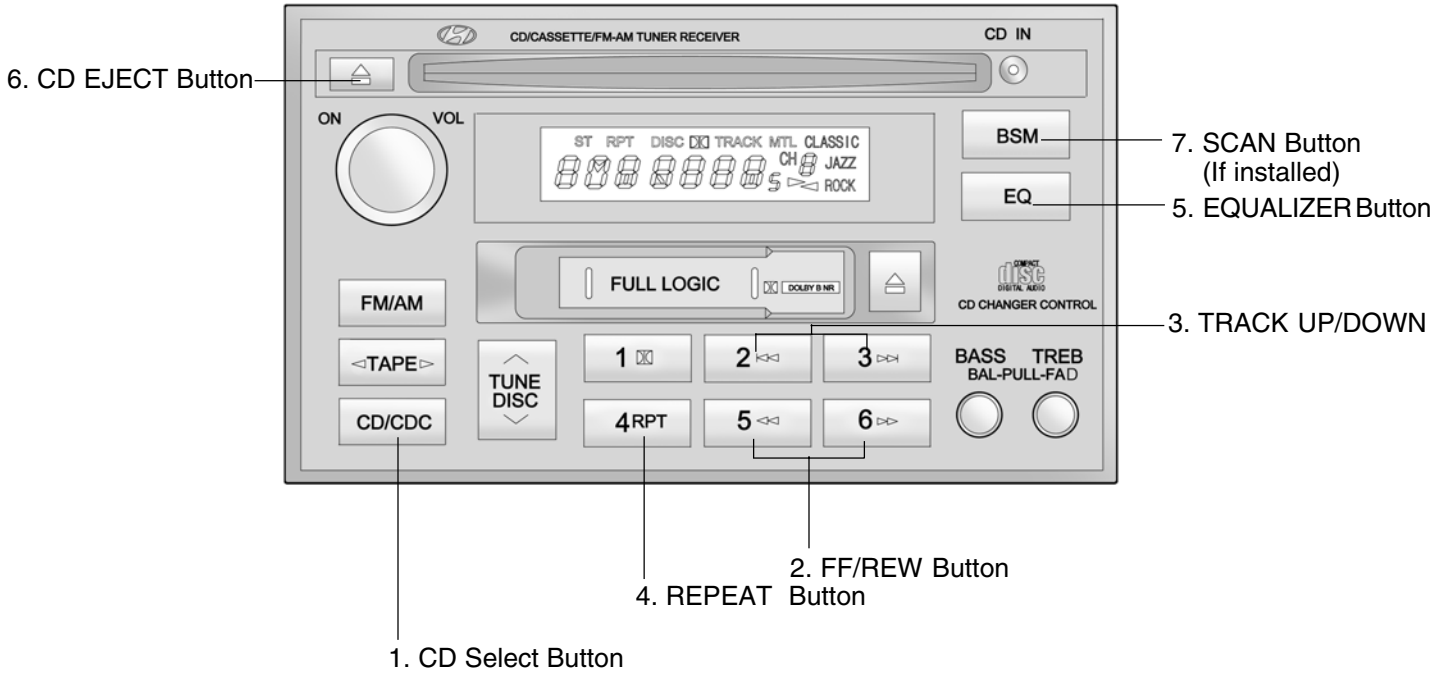

H290A01O

H290F02O-GAT

1. CD Select Button

- o Insert the CD with the label facing upward.
- o Insert the CD to start CD playback, during radio operation or cassette tape playing.
- o When a disc is in the CD deck, if you press the CD button the CD player will begin playing even if the radio or cassette player is being used.
- o The CD player can be used when the ignition switch is in either the "ON" or "ACC" position.

2. FF/REW (▶▶/◀◀)

If you want to fast forward or reverse through the compact disc track, push and hold in the FF (▶▶) or REW (◀◀) button.
When you release the button, the compact disc player will resume playing.

3. TRACK UP/DOWN

- o The desired track on the disc currently being played can be selected using the track number.
- o Press ▶▶| button once to skip forward to the beginning of the next track. Press |◀◀ button once to skip back to the beginning of the track.

4. REPEAT BUTTON

- o To repeat the track you are currently listening to, press the RPT button. To cancel , press again.
- o If you do not release RPT operation when the track ends, it will automatically be replayed.
  This process will be continued until you push the button again.

5. EQUALIZER BUTTON

Press the EQ button to select the CLASSIC, JAZZ, ROCK and DEFEAT MODE for the desired tone quality. Each press of the button changes the display as follows;

CLASSIC → JAZZ → ROCK → DEFEAT

6. CD EJECT Button

When the ⏏ button is pressed with a CD loaded, the CD will eject.

7. SCAN Button (If installed)

- o Press the SCAN button to playback the first 10 seconds of each track.
- o Press the SCAN button again within 10 sec. for the desired track.

NOTE:

- **o To assure proper operation of the unit, keep the vehicle interior temperature within a normal range by using the vehicle's air conditioning or heating system.**
- **o When replacing the fuse, replace it with a fuse having the correct capacity.**
- **o The preset station frequencies are all erased when the car battery is disconnected. Therefore, all data will have to be set again if this should occur.**
- **o Do not add any oil to the rotating parts. Keep magnets, screwdrivers and other metallic objects away from the tape mechanism and head.**

- This equipment is designed to be used only in a 12 volt DC battery system with negative ground.
- This unit is made of precision parts. Do not attempt to disassemble or adjust any parts.
- When driving your vehicle, be sure to keep the volume of the unit set low enough to allow you to hear sounds coming from the outside.
- Do not expose this equipment (including the speakers and tape) to water or excessive moisture.

CAUTION:

- Do not insert warped or poor quality discs into the CD player as damage to the unit may occur.
- Do not insert anything like coins into the player slot as damage to the unit may occur.
- Do not place beverages close to the audio system. The playback mechanism may be damaged if you spill them.
- Do not impact on the audio system, or the playback mechanism could be damaged.
- Driving on the off-roads or other vibrations may skip your compact disc.
  Do not use the audio system on off-roads as the discs could be scratched and damaged.
- Do not grip or pull out the disc with your hand while the disc is being pulled into the unit by the self loading mechanism. These can cause poor disc scratching to occur or trouble in the compact disc player.

- Avoid using CD-Recordable or CD-Rewritable as the player could not be operated in recording way of the CD maker. When using the compact disc player, genuine CDs are recommended.

AUDIO FAULT CODE

B890A01P-AAT

If you see any error indication in the display while using the CD or Tape mode, find the cause in the chart below. If you cannot clear the error indication, take the car to your Hyundai dealer.

INDICATION	CAUSE	SOLUTION
Er2	CDP DECK MECHANICAL ERROR (EJECT ERROR, LOADING ERROR)	After resetting the audio, push the eject button. If disc is not ejected, consult your hyundai dealer.
Er3	FOCUS ERROR DATA READ ERROR	Make sure the disc is not scratched or damaged. Press the eject button and pull out the disc. Then insert a normal CD disc.
Er6	DISC ERROR	Check if the disc is inserted correctly in the CD player. Make sure the disc is not scratched or damaged.
Er8	TAPE DECK ERROR TAPE EJECT ERROR	After resetting the audio, push the eject button. If tape is not ejected, consult your hyundai dealer.
HHH	TEMPERATURE IS TOO HIGH	Fault code will reset automatically when the temperature returns to normal.

CARE OF DISC

B850A02F-AAT

Proper Handling

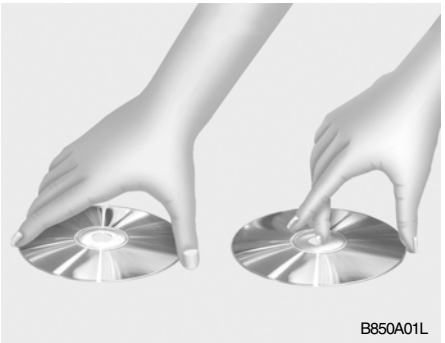

Handle your disc as shown. Do not drop the disc. Hold the disc so you will not leave fingerprints on the surface. If the surface is scratched, it may cause the pickup to skip signal tracks. Do not affix tape, paper, or gummed labels on the disc. Do not write on the disc.

Damaged Disc

Do not attempt to play damaged, warped or cracked discs. It could severely damage the playback mechanism.

Storage

When not in use, place your discs in their individual case and store them in a cool place away from the sun, heat, and dust.
Do not grip or pull out the disc with your hand while the disc is being pulled into the unit by the Self Loading mechanism.

Keep Your Discs Clean

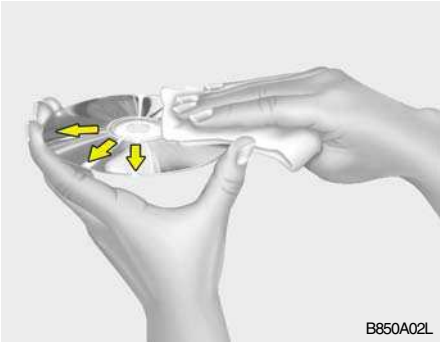

Fingerprints, dust, or soil on the surface could cause the pickup to skip signal tracks. Wipe the surface clean with a clean soft cloth. If the surface is heavily soiled, dampen a clean soft cloth in a solution of mild neutral detergent to wipe it clean.

CARE OF CASSETTE TAPES

B860A01A-AAT

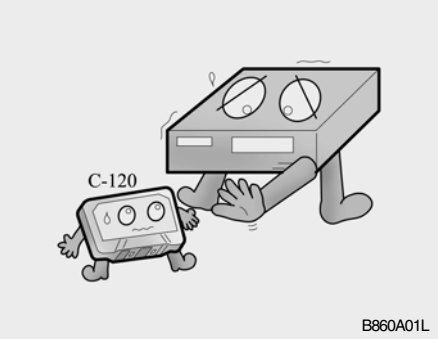

Proper care of your cassette tapes will extend the tape life and increase your listening enjoyment. Always protect your tapes and cassette cases from direct sunlight, severely cold and dusty conditions. When not in use, cassettes should always be stored in the protective cassette case in which they were originally supplied. When the vehicle is very hot or cold, allow the interior temperature to become more comfortable before listening to your cassettes.

- o Never leave a cassette inserted in the player when not being played. This could damage the tape player unit and the cassette tape.
- o We strongly recommend against the use of tapes longer than C-60 (60 minutes total). Tapes such as C-120 or C-180 are very thin and do not perform as well in the automotive environment.

- o Be sure that the cassette label is not loose or peeling off or tape ejection may be difficult.
- o Never touch or soil the actual audio tape surfaces.
- o Keep all magnetized objects, such as electric motors, speakers or transformers away from your cassette tapes and tape player unit.
- o Store cassettes in a cool, dry place with the open side facing down to prevent dust from settling in the cassette body.
- o Avoid repeated fast reverse usage to replay one given tune or tape section. This can cause poor tape winding to occur, and eventually cause excessive internal drag and poor audio quality in the cassette. If this occurs, it can sometimes be corrected by fast winding the tape from end to end several times. If this does not correct the problem, do not continue to use the tape in your vehicle.

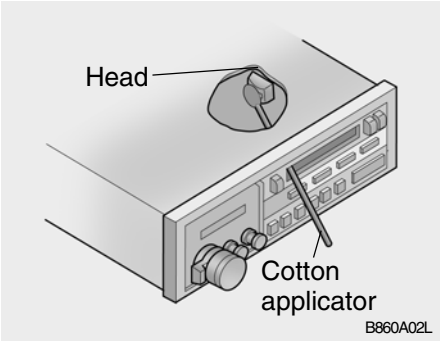

- The playback head, capstan and pinch rollers will develop a coating of tape residue that can result in deterioration of sound quality, such as a wavering sound. They should be cleaned monthly using a commercially available head cleaning tape or special solution available from audio specialty shops. Follow the supplier's directions carefully and never oil any part of the tape player unit.
- Always be sure that the tape is tightly wound on its reel before inserting in the player. Rotate a pencil in the drive sprockets to wind up any slack.

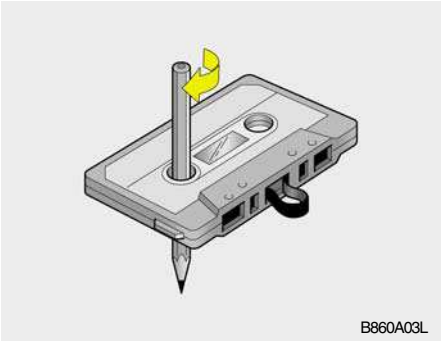

NOTE:
Look at a tape before you insert it. If the tape is loose, tighten it by turning one of the hubs with a pencil or your finger. If the label is peeling off, do not put it in the drive mechanism when you try to eject it. Do not leave tape sitting where they are exposed to hot warm or, high humidity, such as on top of the dashboard or in the player. If a tape is exposed to extreme heat or cold, let it reach a moderate temperature before putting it in the player.

B870A02A-GAT

Fixed Rod Antenna (If installed)

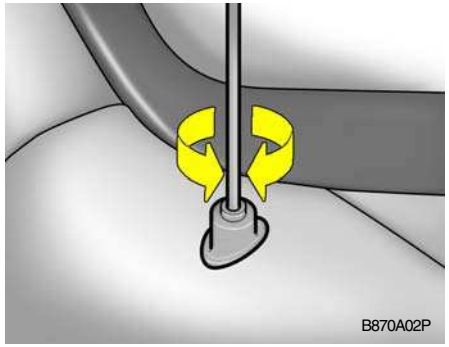

Your car uses a fixed rod antenna to receive both AM and FM broadcast signals.
This antenna is a removable type. To remove the antenna, turn the antenna counterclockwise. To install the antenna, turn the antenna clockwise.

CAUTION:

- **Be sure to remove the antenna before washing the car in an automatic car wash or the antenna may be damaged.**
- **When reinstalling your antenna, it is important that it is fully tightened to ensure proper reception.**

B870C01A-GAT

Manual Antenna

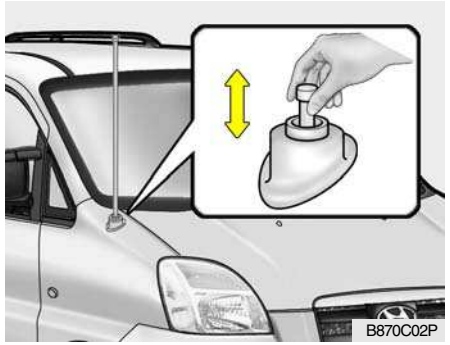

Your car uses a manual stainless steel antenna to receive both AM and FM broadcast signals. Pull up the antenna using your fingers, as shown in the drawing.

NOTE:

Before entering an automatic car wash or a place with a low height clearance, be sure that the antenna is fully retracted.

B870B01Y-AAT

Power Antenna (If installed)

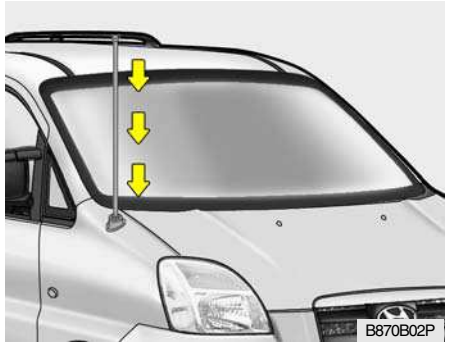

The antenna will automatically be extended when the radio power switch is turned on while the ignition key is in either the "ON" or "ACC" position. The antenna will automatically be retracted and stored when either the radio power switch is turned off or the ignition key is set to the "LOCK" position.

CANTION:

- Before turning on the radio, make sure that no one is near the antenna.
- Before entering an automatic car wash or a place with a low height clearance, be sure that the antenna is retracted and stored.
- If the antenna is dirty, be sure to clean it in order to avoid an operation malfunction.

STARTING AND OPERATING

Engine Exhaust Can Be Dangerous! 3-2
Before Starting the Engine 3-3
Precaution for Exhaust Fumes While
Starting and Driving 3-3
To Start the Engine 3-4
Key Positions 3-4
Starting 3-5
Manual Transmission 3-8
Automatic Transmission 3-10
Driving with Electronic Dual-Range Automatic
Transmission 3-14
Four-Wheel Drive (4WD) 3-16
Brake System 3-20
Anti-Lock Brake System (ABS) 3-24
Back Warning System 3-25
Driving for Economy 3-26
Smooth Cornering 3-29
Winter Driving 3-29
Additional Equipment 3-32
Locking Differential 3-32

C010A02O-AAT

WARNING: ENGINE EXHAUST CAN BE DANGEROUS!

Engine exhaust fumes can be extremely dangerous. If, at any time, you smell exhaust fumes inside the vehicle, open the windows immediately.

o Do not inhale exhaust fumes.
Exhaust fumes contain carbon monoxide, a colorless, odorless gas that can cause unconsciousness and death by asphyxiation.

o Be sure the exhaust system does not leak.
The exhaust system should be checked whenever the vehicle is raised to change the oil or for any other purpose. If you hear a change in the sound of the exhaust or if you drive over something that strikes the underneath side of the car, have the exhaust system checked as soon as possible by your Hyundai dealer.

o Do not run the engine in an enclosed area.
Letting the engine idle in your garage, even with the garage door open, is a hazardous practice. Never run the engine in your garage any longer than it takes to start the engine and back the car out.

o Avoid idling the engine for prolonged periods with people inside the car.
If it is necessary to idle the engine for a prolonged period with people inside the car, be sure to do so only in an open area with the air intake set at "Fresh" and fan operating at one of the higher speeds so fresh air is drawn into the interior.

If you must drive with the tailgate open because you are carrying objects that make this necessary:

1. Close all windows.
2. Open side vents.
3. Set the air intake control at "Fresh", the air flow control at "Floor" or "Face" and the fan at one of the higher speeds.

To assure proper operation of the ventilation system, be sure the ventilation air intakes located just in front of the windshield are kept clear of snow, ice, leaves or other obstructions.

BEFORE STARTING THE ENGINE

C020A02O-GAT

Before you start the engine, you should always:

1. Look around the vehicle to be sure there are no flat tires, puddles of oil, water or other indications of possible trouble.
2. After entering the car, check to be sure the parking brake is engaged.
3. Check that all windows, and lights are clean.
4. Check that the interior and exterior mirrors are clean and in position.
5. Check your seat, seatback and headrest to be sure they are in their proper positions.
6. Lock all the doors.
7. Fasten your seat belt and be sure that all other occupants have fastened theirs.
8. Turn off all lights and accessories that are not needed.
9. When you turn the ignition switch to "ON", check that all appropriate warning lights are operating and that you have sufficient fuel.
10. Check the operation of warning lights and all bulbs when key is in the "ON" position.

WARNING (DIESEL ENGINE):
To ensure that sufficient vacuum exists within the brake system during cold weather start-up conditions, it is necessary to run the engine at idle for several seconds after starting the engine.

WARNING:
Always wear appropriate shoes when operating your vehicle.
Unsuitable shoes (high heels, ski boots, etc.) may interfere with your ability to use the brake and accelerator pedal, and the clutch (if installed).

PRECAUTION FOR EXHAUST FUMES WHILE STARTING AND DRIVING

D010A01P-GAT

1. Do not breathe exhaust fumes containing carbons monoxide when starting or driving. Carbon monoxide is a colorless, odorless gas and can cause unconsciousness or death by asphyxiation.
2. Open all the windows fully and get the back door closed if you smell exhaust fumes inside the vehicle. Have the cause immediately located and corrected.
3. Check the exhaust system, from time to time, for holes or loose connections if you hear a change in the exhaust sound, or if something has hit the exhaust system.
4. Do not race the engine in a garage or enclosed area any longer than it takes to start the engine and drive the vehicle in or out. The sealed exhaust fume may make a particularly dangerous situation.

5. Avoid idling the engine for prolonged periods with people inside the car. If it is unavoidable, however, be sure to do so in an open area and adjust the heating or cooling system to force outside into the vehicle.
6. Make sure that the ventilation air intakes located just in front of the windshield are kept clear of snow, ice, leaves or other obstructions, to assure proper operation of the ventilation system.
7. Get the back door closed while driving. An incompletely closed back door may cause exhaust fumes to be drawn into the vehicle. If you must drive with the back door open to accommodate a large object, close the windows, open the dashboard vents and have the heating or cooling system deliver fresh air into the vehicle by turning the fan to high speeds with the air intake control lever set in the "Fresh" position (Minibus, Van).

TO START THE ENGINE

C030A01A-GAT

COMBINATION IGNITION SWITCH

Before starting the engine:

- o If your Hyundai is equipped with a manual transaxle, place the shift lever in neutral and depress the clutch pedal fully.
- o If your Hyundai has an automatic transaxle, place the shift lever in "P" (park).
- o To start the engine, insert the ignition key and turn it to the "START" position. Release it as soon as the engine starts. Do not hold the key in the "START" position for more than 15 seconds.

NOTE:

For safety, the engine will not start if the shift lever is not in "P" or "N" Position (Automatic Transmission).

KEY POSITIONS

C040A02A-AAT

WARNING:

The engine should not be turned off or the key removed from the ignition key cylinder while the vehicle is in motion. The steering wheel is locked by removing the key.

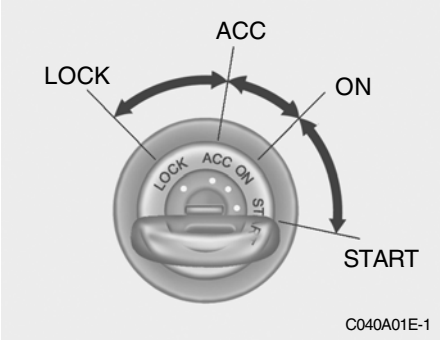

o "START"

The engine is started in this position. It will crank until you release the key.

NOTE:
Do not hold the key in the "START" position for more than 15 seconds.

o "ON"

When the key is in the "ON" position, the ignition is on and all accessories may be turned on. If the engine is not running, the key should not be left in the "ON" position. This will discharge the battery and may also damage the ignition system.

o "ACC"

With the key in the "ACC" position, the some electrical accessories (radio etc.) may be operated.

o "LOCK"

The key can be removed or inserted in this position.
To protect against theft, the steering wheel locks by removing the key.

NOTE:
If difficulty is experienced in turning the ignition key to the START position, turn the steering wheel right and left to release the tension and then turn the key.

C070C01A-AAT
To remove the ignition key

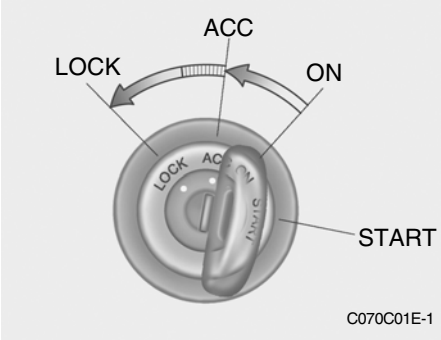

1. Turn the ignition key to the "ACC" position.
2. Simultaneously push and turn the ignition key counterclockwise from the "ACC" position to the "LOCK" position.
3. The key can be removed in the "LOCK" position.

C050A01A-GAT
Starting For The Gasoline Engine

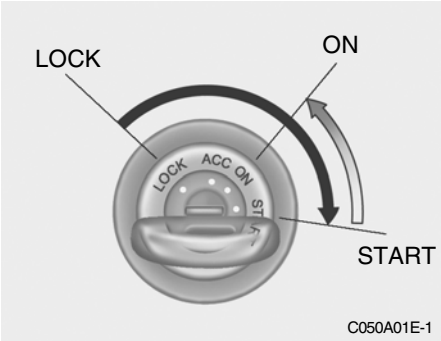

WARNING:
Never run the engine in a closed or poorly ventilated area any longer than is needed to move your car in or out of the area. The carbon monoxide gas emitted is odorless and can cause serious injury or death.

C051A01O-GAT

Starting For The Diesel Engine

ENGINE COLD

- o Turn the ignition key to position "ON" and wait for the pre-heat indicator light to go out.
- o Operate the starter until the engine runs.

ENGINE WARM

Operate the starter. If the engine does not respond on the first attempt, wait several seconds and try again using the pre-heat.

C050B02S-GAT

NORMAL CONDITIONS

The Starting Procedure:

1. Insert key, and fasten the seat belt.
2. Depress the clutch pedal fully and place the gearshift lever (manual transmission) in neutral or the selector lever (automatic transmission) in "P" (park) position.
3. After turning the ignition key to the "ON" position, make certain all warning lights and gauges are functioning properly before starting the engine.
4. On vehicles equipped with the diesel preheat indicator light, turn the ignition key to the "ON" position. The diesel pre-heat indicator light will first illuminate in amber, and then after a short time, the amber illumination will goes off, indicating that preheating is completed.

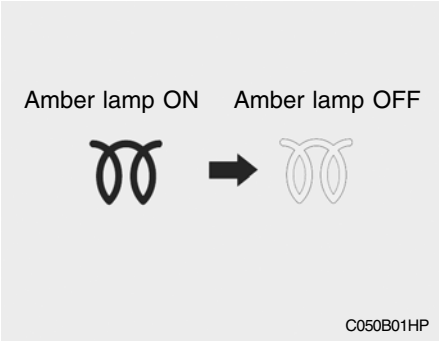

NOTE:

If the engine was not started 10 seconds after the preheating is completed, turn the ignition key once more to the "LOCK" position, and then to the "ON" position, in order to preheat again.

WARNING:
Be sure that the clutch is fully depressed when starting a manual transmission vehicle. Otherwise there is the potential to cause damage to the vehicle or injury to someone inside or outside the vehicle as a result of the forward or backward movement of the vehicle that will occur if the clutch is not depressed when the vehicle is started.

5. Turn the ignition key to the "START" position and release it when the engine starts.

D040A01P-GAT

Tips for starting

- Do not operate the starter motor continuously for longer than ten seconds; doing so could run down the battery. If the engine does not start, turn the ignition switch back to "LOCK", wait a few minutes, and then try again.
- If the engine cannot be started because the battery is weak or dead, refer to the emergency starting section for instructions on Emergency Starting.
- After starting the engine, do not keep the engine idling without driving.
  Once when the atmospheric temperature is very low, warm up the engine at a high idling speed to ensure proper circulation of the oil.

CAUTION:
- **Do not run the engine at high rpm or drive the vehicle at high speed until the engine has had a chance to warm up.**
- **Release the ignition key as soon as the engine starts to avoid damaging the starter motor.**

D041A02P-GAT

STARTING AND STOPPING THE ENGINE FOR TURBO CHARGER OR TURBO CHARGER INTER-COOLER (If installed)

(1) Do not race the engine or sudden accelerate the engine immediately after start it. If the engine is cold, allow the engine to idle for several seconds before it is driven to ensure sufficient lubrication of the turbo charger unit.

(2) After high speed or extended driving, requiring a heavy engine load, the engine should be allowed to idle, as shown in the chart below, before turning it off.
This idle time will allow the turbo charger to cool prior to shutting the engine off.

Driving Condition		Required Idlec Time
Normal driving		Not necessary
High speed driving	Up to 80 km/h	About 20 seconds
	Up to 100km/h	About 1 minute
Steep mountain slopes or continued driving in excess of 100km/h		About 2 minutes

WARNING:
Do not turn the engine off immediately after it has been subjected to a heavy load. Doing so may cause severe damage to the engine or turbo charger unit.

MANUAL TRANSMISSION

D070A02A-GAT

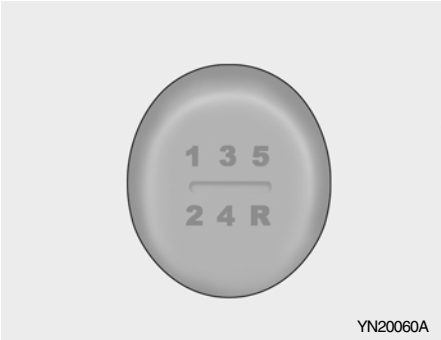

YN20060A

Your Hyundai's manual transmission has a conventional shift pattern. This shift pattern is imprinted on the shift knob. The transmission is fully synchronized in all forward gears so shifting to either a higher or a lower gear is easily accomplished.

NOTE:

- **To shift into reverse, rest the lever in neutral for at least 3 seconds after your car is completely stopped. Then move the lever into the reverse position.**
- **During cold weather, shifting may be difficult until the transmission lubricant has warmed up. This is normal and not harmful to the transmission.**
- **If you've come to a complete stop and it's hard to shift into 1st or "R", put the shift lever in "N" position and let up on the clutch. Press the clutch pedal back down, and then shift into 1st or "R" gear position.**
- **Do not use the shift lever as a handrest during driving, as this can result in premature wear of the transmission shift forks.**

CAUTION:

When downshifting from fifth gear to fourth gear, caution should be taken not to inadvertently press the gear lever sideways in such a manner that second gear is engaged. Such a drastic downshift may cause the engine speed to increase to the point that the tachometer will enter the red-zone. Such over-revving of the engine may possibly cause engine damage.

D050B01P-GAT

Using the Clutch

The clutch should be pressed all the way to the floor before shifting, then released slowly. Do not rest your foot on the clutch pedal while driving. This can cause unnecessary wear.

Do not partially engage the clutch to hold the vehicle on an incline. This causes unnecessary wear.

Use the parking brake to hold the vehicle on an incline. Do not operate the clutch pedal rapidly and repeatedly.

C070E03A-GAT

RECOMMENDED SHIFT POINTS

Shift from-to	Recommended
1-2	20 km/h (15 mph)
2-3	40 km/h (25 mph)
3-4	55 km/h (35 mph)
4-5	75 km/h (45 mph)

The shift points as shown above are recommended for optimum fuel economy and performance.

C070D02O-AAT

Good Driving Practices

- Never take the vehicle out of gear and coast down a hill. This is extremely hazardous. Always leave the vehicle in gear.
- Don't "ride" the brakes. This can cause them to overheat and malfunction. Instead, when you are driving down a long hill, slow down and shift to a lower gear. When you do this, engine braking will help slow the car.

- Slow down before shifting to a lower gear.
  This will help avoid over-running the engine, which can cause damage.
- Slow down when you encounter cross winds. This gives you much better control of your car.
- Be sure the vehicle is completely stopped before you attempt to shift into reverse. The transmission can be damaged if you do not. To shift into reverse, depress the clutch, move the shift lever to neutral, wait three seconds, then shift to the reverse position.
- Exercise extreme caution when driving on a slippery surface. Be especially careful when braking, accelerating or shifting gears.
  On a slippery surface, an abrupt change in engine speed can cause the drive wheels to lose traction and the vehicle to go out of control.

WARNING:

- **Avoid high cornering speeds.**
- **Do not make quick steering wheel movements, such as sharp lane changes or fast, sharp turns.**
- **Always wear your seat belts.**
  In a collision crash, an unbelted person is significantly more likely to die than a person wearing a seatbelt.
- **The risk of rollover is greatly increased if you lose control of your vehicle at highway speeds.**
- **Loss of control often occurs if two or more wheels drop off the roadway and the driver oversteers to reenter the roadway.**
- **In the event your vehicle leaves the roadway, do not steer sharply. Instead, slow down before pulling back into the travel lanes.**
- **Never exceed posted speed limits.**

AUTOMATIC TRANSMISSION

D060A01P-GAT

(Minibus/Van) (If installed)

The highly efficient Hyundai automatic transmission has four forward speeds and one reverse speed. It has a conventional shift pattern as shown in the illustration.
At night, with the side markers or headlights switched on, the appropriate symbol on the quadrant will be illuminated according to the range selected.

CAUTION:
Never shift into "R" or "P" position while the vehicle is moving.

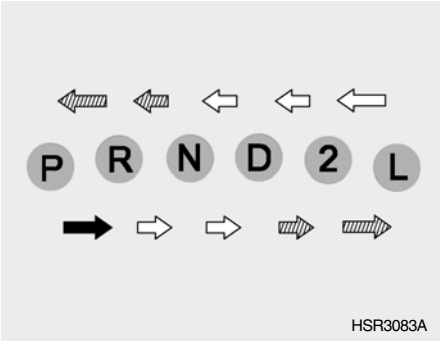

Depress the brake pedal and push the button when shifting.
Push the button when shifting.
The selector lever can be shifted freely.

For optimum fuel economy, accelerate gradually. The transmission will automatically shift to the second, third and overdrive gears.

D060B01P-GAT

The function of each position is as follows:

o P (Park):

Use to hold the vehicle in place when parking or while starting the engine; shift the selector lever to the "P" position. Whenever parking the car, apply the parking brake and shift the selector lever to the "P" position.

CAUTION:
Never place the selector lever in the "P" position unless the vehicle is fully stopped.
Failure to observe this caution will cause severe damage to the transmission.

D060C01P-GAT

o R (Reverse):

Use for backing up the vehicle. Bring the vehicle to a complete stop before shifting the selector lever to "R" position.

D060D01P-GAT

o N (Neutral):

In the "N" position, the transmission is in neutral, which means that no gears are engaged. The engine can be started with the shift lever in "N" position, although this is not recommended except if the engine stalls while the car is moving.

D060E01P-GAT

o D (Drive):

Use for normal driving. The transmission will automatically shift through a four-gear sequence, giving best economy and power. Never down-shift manually to "2" position or "L" position when vehicle speed is more than 96 km/h (60 mph).

D060F01P-GAT

o 2 (Second gear):

Use for driving on slippery road, hill climbing or engine braking downhill. "2" automatically shifts between 1st and 2nd gears.
This means that no shift-up to 3rd gear is performed. However, the shift-up to 3rd gear is done when the vehicle speed exceeds a certain value to prevent the engine from over-running.
Manually move the selector to "D" returning to normal driving condition.

D060G01P-GAT

o L (Low gear):

Use for driving up a very steep grade or for engine braking when descending steep hills. When downshifting to "L", the transmission will temporarily remain in second gear until the vehicle has slowed enough for low gear to engage. Do not exceed 50 km/h (31 mph) in low gear.
"L" engages 1st gear only. However, shift-up to 2nd is performed when the vehicle exceeds a certain speed, and as the speed increases, shift-up to 3rd gear occurs to prevent over-running the engine.

D060H02P-GAT

o P (Park):

Use this range to park the vehicle. This range is also used when engine is started and warmed up.

o N (Neutral):

The engine can be started in this range, but the use of P range is recommended for safer start up.

NOTE:

- **For smooth and safe operation, depress the brake pedal when shifting from "N" position or "P" position to a forward or reverse gear.**
- **The brake pedal fully depressed in order to move the shift lever from the "P" position to any of the other positions.**
- **It is always possible to shift from "R", "N", "D", "2", "L" position to "P" position. The vehicle must be fully stopped to avoid transmission damage.**

CAUTION:

- **Shift into "R" and "P" only when the vehicle has completely stopped.**
- **Do not accelerate the engine in the reverse or any of the forward positions with the brakes applied.**
- **Always apply the footbrake when shifting from "P" or "N" to "R", "D", "2" or "L" position.**
- **Do not use the "P" position in place of the parking brake. Always set the parking brake, shift the transmission into "P" and turn off the ignition when you leave the vehicle, even momentarily.**
  Never leave the vehicle unattended while the engine is running.
- **Check the automatic transmission fluid level regularly, and add fluid as necessary.**
  See the maintenance schedule for the proper fluid recommendation.

D080A01P-GAT

OVERDRIVE SWITCH (If installed)

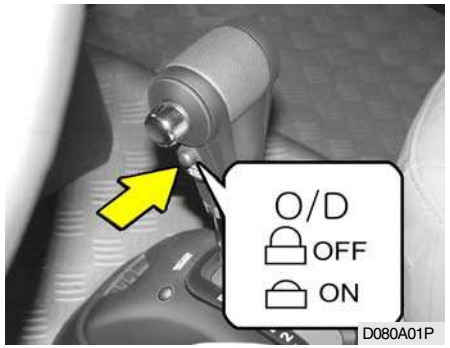

When the overdrive switch is turned on, the transmission will automatically upshift to the second, third and overdrive gears. When the overdrive switch is turned off, the transmission will not upshift to the overdrive gear at all.
For normal driving, the selector lever should be left in the "D" position and the overdrive switch turned on. To move the selector lever, the push button on the selector lever handle may have to be depressed first.

If you need to accelerate rapidly, press the accelerator pedal all the way to the floor. The transmission will automatically shift to a lower gear, depending on the speed.

NOTE:

Turn the overdrive switch on for good fuel economy and smooth driving. If engine braking is needed in the "D" range or if repeated upshifting and downshifting between the 3rd and 4th gear is needed when climbing a gentle slope, it is recommended that the overdrive switch be turned off. Turn the overdrive switch back on immediately afterward.

DRIVING WITH ELECTRONIC DUAL-RANGE AUTOMATIC TRANSMISSION

D070A01P-GAT

(If installed)

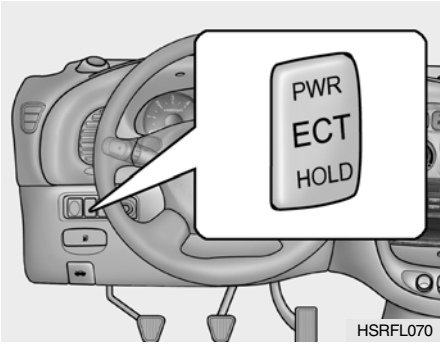

The electronically controlled dual-range (Power/Normal) 4 speed automatic transmission is available for you Hyundai.
According to the road conditions, set the switch at the "NORMAL", "POWER" or "HOLD" mode for normal driving, for greater power driving or for shift stage hold driving.
Each time you press the switch, the "NORMAL", "POWER" and "HOLD" modes will switch alternately. The "POWER" and "HOLD" indicator in the instrument panel comes on or off. Normally, drive your vehicle in the "NORMAL" mode where the switch is not pressed. (The "PWR" and "HOLD" indicators go out.)

D070B01P-GAT

"NORMAL" Mode

The "N" (Normal) mode offers quiet and smooth auto-shifting with outstanding fuel economy. The "N" (Normal) mode is recommended for normal driving. Set the driving pattern selector switch to the "N" (Normal) position. Push the selector lever to the "D" range and depress the accelerator pedal slowly. If you need rapid acceleration, fully depress the accelerator pedal.

D070C01P-GAT

"POWER" Mode

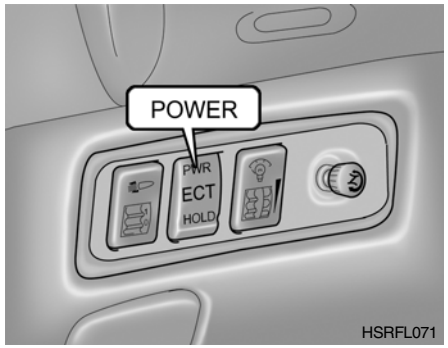

In the "POWER" mode, you can obtain full potential of the engine for maximum acceleration and driveability. The "POWER" mode is recommended for higher speeds than the "NORMAL" mode, driving in mountainous areas and for strong acceleration. Set the driving pattern selector switch to the "POWER" position.

D070D01P-GAT

"HOLD" mode

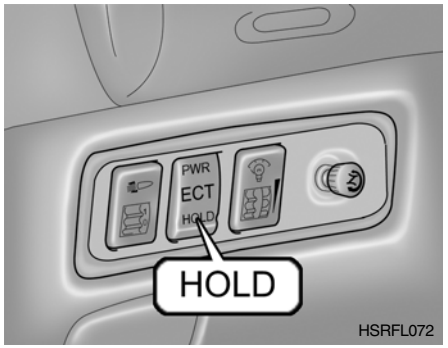

Select the "HOLD" mode when starting your vehicle on a road surface slippery from snow or the like, and the vehicle will start smoothly in second gear.
When you need quick acceleration or engine braking power on a downhill grade, or when you are going to go up a long hill, press the "HOLD" switch once again to cancel the "HOLD" function.

When "HOLD" button is depressed, "HOLD" indicator light in the instrument cluster will illuminate and automatic shifting will be performed in the range from 2nd gear to 3rd gear only, as shown in the table.

Position	Shifting gear
1	2
2	2
3	3
4	3

D070E04P-GAT

Good Driving Practices

- o Never move the gear selector lever from "P" or "N" to any other position with the accelerator pedal depressed.
- o Never move the gear selector lever into "P" when the vehicle is in motion.
- o Be sure the vehicle is completely stopped before you attempt to shift into "R".
- o Never take the vehicle out of gear and coast down a hill. This may be extremely hazardous. Always leave the vehicle in gear when moving.
- o Do not "ride" the brakes. This can cause them to overheat and malfunction. Instead, when you are driving down a long hill, slow down and shift to a lower gear. When you do this, engine braking will help slow the car.
- o Slow down before shifting to a lower gear. Otherwise, the lower gear may not be engaged.

- o Always use the parking brake. Do not depend on placing the transmission in "P" to keep the vehicle from moving.
- o Exercise extreme caution when driving on a slippery surface. Be especially careful when braking, accelerating or shifting gears.
  On a slippery surface, an abrupt change in engine speed can cause the drive wheels to lose traction and the vehicle to go out of control.
- o Do not hold the vehicle on the upgrade with the accelerator pedal. This can cause the transmission to overheat. Always use the brake pedal or parking brake.
- o Optimum vehicle performance and economy is obtained by smoothly depressing and releasing the accelerator pedal.

WARNING:

- **o Avoid high cornering speeds.**
- **o Do not make quick steering wheel movements, such as sharp lane changes or fast, sharp turns.**

- **o Always wear your seat belts. In a collision crash, an unbelted person is significantly more likely to die than a person wearing a seatbelt.**
- **o The risk of rollover is greatly increased if you lose control of your vehicle at highway speeds.**
- **o Loss of control often occurs if two or more wheels drop off the roadway and the driver oversteers to reenter the roadway.**
- **o In the event your vehicle leaves the roadway, do not steer sharply. Instead, slow down before pulling back into the travel lanes.**
- **o Never exceed posted speed limits.**
- **o If your vehicle becomes stuck in snow, mud, sand, etc., then you may attempt to rock the vehicle free by moving it forward and backward. Do not attempt this procedure if people or objects are anywhere near the vehicle. During the rocking operation the vehicle may suddenly move forward of backward as it becomes unstuck, causing injury or damage to nearby people or objects.**

FOUR-WHEEL DRIVE (4WD)

D090A01P-GAT

(Minibus) (If installed)

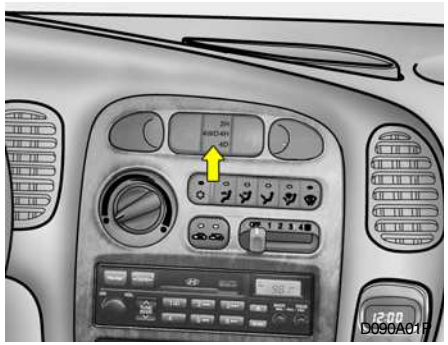

You can send your engine power to all front and rear wheels for maximum power. 4WD is useful when you drive in snow, mud, ice, mountainous or sandy areas where good traction is required, or when your wheels lose traction using two-wheel drive.

Switch position

o 2H(Rear-wheel drive)

When driving on normal roads and highway.

o 4H(High range 4-wheel drive)

When driving deep snow, sand or rough roads with normal speed. The 4WD indication light "HI" will be turned on to remind you that you are in the 4H mode.

o 4L(Low range 4-wheel drive)

When driving up or descending steep slopes or rough roads such as muddy road. Especially when increased drive power is required.
The indication light "LO" will be turned on to remind you that you are in the 4L mode.

CAUTION:
Do not select 4WD mode on dry paved roads. Especially on dry high way, never select the 4WD(4H or 4L).
Four-wheel driving on dry paved roads for a long period will increase the fuel consumption with possible noise generation and early tire wear. In addition, differential oil temperature increases with possible driving system part wear.

D090B01P-GAT

Manual vacuum type free wheel hubs (If installed)

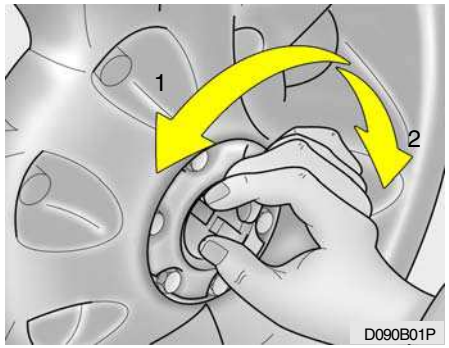

The hubs are set to either the "FREE" position or the "LOCK" position by turning the handle.

1. FREE - This position is for rear wheel drive.
2. LOCK - This position is for four wheel drive.

Bring the vehicle to a complete stop, adjust the free wheel hubs to Lock (Free) position, and then resume driving. And select transfer shift switch to desired mode.

CAUTION:
If four wheel drive is to be used, both the left and right free wheel hubs must be set to the "LOCK" position. Do not attempt to drive the vehicle with the transfer shift switch is selected to either the "4H" or "4L" position if the free wheel hubs are in the "FREE" position. If the setting of the free wheel hubs is to be changed after extended use of the brake (such as for descending a long slope), allow them to cool first. The free wheel hubs can be become extremely hot and could cause severe burns.

D090C01P-GAT

Auto vacuum type free wheel hubs (If installed)

The auto vacuum type free wheel hub is designed to allow for automatic 4WD engagement when the transfer shift switch is selected to the 4H or 4L position.
When engaging and disengaging, the auto vacuum type free wheel hubs will make a clicking noise. This is normal.

D090D02P-GAT

Transfer shift switch operation

By selecting the transfer shift switch(4H, 4L), the both axles of the vehicle are rigidly connected with each other. This improves the traction characteristics.

2H → 4H

Select the 4H mode switch at speed below 60~70 km/h. It is not necessary to depress the clutch pedal (manual transmission) or put the shift lever into "N" position (automatic transmission). Perform this operation when driving straight.

4H → 2H

Select the 2H mode switch. This can be done at any speed, and it is not necessary to depress the clutch pedal (manual transmission) or put the shift lever into "N" position (automatic transmission). Perform this operation when driving straight.

NOTE:
If the transfer shift is switched into 2H mode, while the vehicle is making a sharp turn or performing abrupt maneuver, the 4H indicator light in the instrument panel will turn off.
However, the vehicle will still be in 4H mode. This condition is normal. When the vehicle returns to normal driving condition, the 4WD system will automatically transfer to the 2H mode.

4H → 4L or 4L → 4H

1. Stop the vehicle.(0-3km/h)
2. Depress the clutch pedal (manual transmission) or put the shift lever into "N" position (automatic transmission).
3. Select the 4H or 4L mode switch.

2H → 4L

1. Stop the vehicle.(0-3km/h)
2. Depress the clutch pedal (manual transmission) or put the shift lever into "N" position (automatic transmission).
3. Select the 4L mode switch.

4L → 2H

1. Stop the vehicle.(0 - 3km/h)
2. Depress the clutch pedal (manual transmission) or put the shift lever into "N" position (automatic transmission).
3. Select the 2H mode switch.

D090E01P-GAT

Driving Four-wheel drive safely

- The driving posture should be more upright and closer to the wheel than usual; adjust the seat to a good position for easy steering and pedal operation.
- Be sure to wear the seat belt.
- Drive carefully when off the road and avoid dangerous areas.
- 4WD has higher ground clearance and a narrower track to make them capable of performing in a wide variety of off road applications. Specific design characteristics give them a higher center of gravity than ordinary cars. An advantage of the higher ground clearance is a better view of the road allowing you to anticipate problems. They are not designed for cornering at the same speeds as conventional 2-wheel drive vehicles any more than low-slung sports cars are designed to perform satisfactorily under off-road conditions. If at all possible, avoid sharp turns or abrupt maneuvers. As with other vehicles of this type, failure to operate this vehicle correctly may result in loss of control or vehicle rollover.

- o Do not grip the inside or spokes of the steering wheel when driving off-road. The steering wheel could jerk and injure your hands. Always firmly hold the outer steering wheel when you are driving off-road.
- o Drive at lower speeds in strong crosswinds. Because of your vehicle's high center of gravity, its stability will be affected in crosswinds. Slower speeds ensure better vehicle control.
- o Whenever you drive off-road through sand, mud or water as deep as the wheel hub, more frequent maintenance may be required.
- o Do not drive in water if the level is higher than the bottom of the wheel hubs.
- o Check your brake condition once you are out of mud or water. Press the brake several times as you move slowly until your feel normal braking forces return.
- o Four-wheel driving on flat and normal roads can result in a severe binding condition when turning the steering wheel.

Driving on dry paved road and highway

Select 2H(2WD) to drive on dry paved roads. Especially on dry highway, never select the 4H or 4L(4WD).

Driving on snowy or icy roads

Select the 4H or 4L in accordance with the road conditions, and then gradually depress the accelerator pedal for a smooth start.

Driving on sandy or muddy roads

Select the 4H or 4L and then gradually depress the accelerator pedal for a smooth start. Keep the pressure on the accelerator pedal constant as possible, and drive at low speed.

Climbing sharp grades

Select the 4L to maximize use the engine torque.

Descending sharp grades

Select 4L, use the engine brake and descend slowly.

BRAKE SYSTEM

D150A01P-GAT

All the parts of the brake system are critical to safety. Have the vehicle serviced by an authorized HYUNDAI dealer at regular intervals according to the service standards.

(1) The service brake is divided into two brake circuits so that when one brake circuit fails, the other is available to stop the vehicle. If this occurs, however, the brake pedal must be depressed further than usual; stop driving as soon as possible and have the brake system serviced at the nearest authorized HYUNDAI dealer.
(2) Do not place a thick floor mat around the brake pedal; doing so could prevent the full pedal stroke that would be necessary in an emergency. Make sure that the pedal can be operated freely at all times.
(3) If the vehicle is equipped with a brake warning lamp, the lamp will light up if the brake fluid level is abnormally low.

(4) If the vehicle is equipped with a brake booster, the brake boosting force is lost after the brake pedal is depressed once or twice while the engine is off. If this occurs, the brake will require greater force than usual.
This is especially important when the vehicle is being towed.

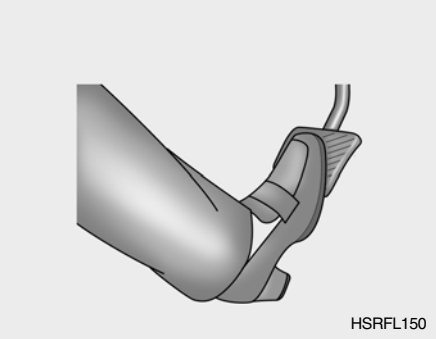

(5) Check the brake system while driving at a low speed immediately after starting, especially when the brakes are wet, to confirm that it works normally.
A film of water can form on the brake discs or brake drums and prevent normal functioning after driving in heavy rain or through large puddles, or after the vehicle is washed. If this occurs, repeatedly tap the brake pedal lightly while driving to dry out the brakes.
(6) It is important to take advantage of the braking power of the engine by shifting to a lower gear while driving on steep downhill roads in order to prevent the brakes from overheating.
(7) Periodically confirm that the brake warning lamp functions properly.
(8) With new brake linings, if possible, avoid applying the brakes fully during the first 200 km (124 miles) of driving.

D120A01P-GAT

PARKING BRAKE

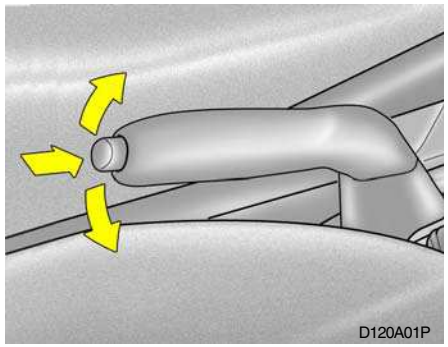

To park the vehicle, first bring it to a complete stop, fully engage the parking brake, and then set the gearshift lever at 1st or reverse. Move the transfer shift lever to any position.

- o To apply, pull the lever up without pushing the button at the end of hand grip.
- o To release, pull the lever slightly, push the button at the end of hand grip, and then push it downward.

CAUTION:
Before driving, be sure that the parking brake is fully released and brake warning lamp is off.

D100A01P-GAT
BRAKE PEDAL

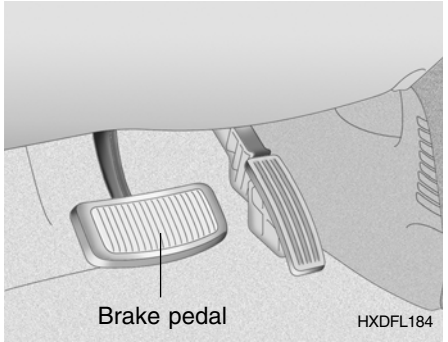

Excessive use of the brake can cause fading, resulting in poor brake response and premature wear of brake linings. When going down a long or steep grade, use engine braking by shifting the transmission into the "2" (SECOND) or "L" (LOW) position.

CAUTION:
It is important that you do not drive the vehicle with your foot resting on the brake pedal when braking is not required. This practice can result in abnormally high brake temperature, excessive lining wear, and possible damage to the brakes.

D160A01P-GAT
PARKING

- When parking on a hill, fully engage the parking brake and set the gear shift lever to 1st or reverse position. It is recommended to use chocks for greater safety.
- Do not keep the engine running for a long time in a closed or poorly ventilated place. Carbon monoxide gas is odourless and extremely poisonous and dangerous.
- Do not park in places where there are such inflammable objects as dry grass, waste cloth, etc. Exhaust pipe temperature is very high just after driving and dry grass etc., if present around the exhaust pipe, can catch fire.
  Also avoid such places for parking where there are inflammable objects at the rear of car.

D130A01P-GAT

LOADING

Loading should not be to the point at which the Maximum Gross Vehicle Weight is exceeded.
Loading should be as uniform as possible.
Driving stability will be reduced if the load is unequal between front/rear or left/right.
Avoid sudden starts, sudden braking, and sharp cornering.

D140A02P-GAT

ANTI-LOCK BRAKE SYSTEM (ABS) (If installed)

The Anti-Lock Brake System (ABS) is designed to prevent wheel lock-up during sudden braking or on hazardous road surfaces. A computer monitors the wheel speed and controls the pressure applied to each brake. Thus, in emergency situations or on slick roads, your ABS will increase vehicle control during braking.

NOTE:

During ABS operation, a slight pulsation may be felt in the brake pedal when the brakes are applied. Also, a noise may be heard in the engine compartment while driving. These conditions are normal and indicate that the anti-lock brake system is functioning properly.

WARNING:

ABS will not prevent accidents due to improper or dangerous driving maneuvers. Even though vehicle control is improved during emergency braking, always maintain a safe distance between you and objects ahead. Vehicle speeds should always be reduced during extreme road conditions.
The braking distance for cars equipped with an anti-lock braking system may be longer than for those without it in the following road conditions.
During these conditions, the vehicle should be driven at reduced speeds:

- **On rough, gravel or snow-covered roads.**
- **With tire chains installed.**
- **On roads where the road surface is pitted or has different surface height.**

The safety features of an ABS equipped vehicle should not be tested by high speed driving or cornering. This could endanger the safety of yourself or others.

D110A01P-GAT

GOOD BRAKING PRACTICES

WARNING:
Nothing should be carried on top of the cargo area cover behind the rear seat. If there were an accident or a sudden stop, such objects could move forward and cause damage to the vehicle or injure the occupants.

- After being parked, check to be sure the parking brake is not engaged and that the parking brake indicator light is out before driving away.
- Driving through water may get the brakes wet. They can also get wet when the vehicle is washed. Your vehicle may not stop as quickly if the brakes are wet and it may also pull to one side. To dry the brakes, apply the brakes lightly until the braking action returns to normal, taking care to keep the vehicle under control at all times. If the braking action does not return to normal, stop as soon as it is safe to do so and call your Hyundai dealer for assistance.
- Don't coast down hills with the vehicle out of gear. This may be extremely hazardous.
  Keep the vehicle in gear at all times, use the brakes to slow down, then shift to a lower gear so that engine braking will help you maintain a safe speed.
- Don't "ride" the brake pedal. Resting your foot on the brake pedal while driving can be dangerous because it can result in the brakes overheating and losing their effectiveness. It also increases the wear of the brake components.
- If a tire goes flat while you are driving, apply the brakes gently and keep the vehicle pointed straight ahead while you slow down. When you are moving slowly enough for it to be safe to do so, pull off the road and stop in a safe place.
- If your vehicle is equipped with an automatic transmission, don't let your vehicle creep forward.
  To avoid creeping forward, keep your foot on the brake pedal when the vehicle is stopped.

o Use caution when parking on a hill. Engage the parking brake and place the gear selector lever in "P"(automatic transmission) or in first or reverse gear (manual transmission). If your vehicle is facing downhill, turn the front wheels away from the curb to help keep the vehicle from rolling. If there is no curb or if it is required by other conditions to keep the vehicle from rolling, block the wheels.
o Under some conditions your parking brake can freeze in the engaged position. This is most likely to happen when there is an accumulation of snow or ice around or near the rear brakes or if the brakes are wet. if there is a risk that the parking brake may freeze, apply it only temporarily while you put the gear selector lever in "P" (automatic transmission) or in first or reverse gear (manual transmission) and block the rear wheels so the vehicle cannot roll. Then release the parking brake.

BACK WARNING SYSTEM

C400A01P-GAT

(If installed)

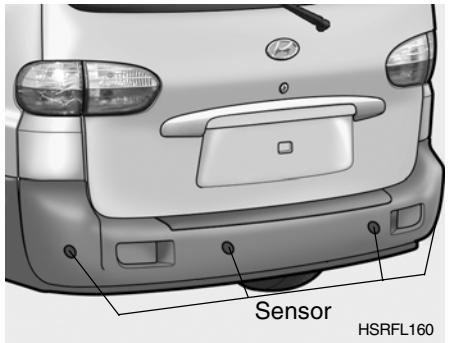

The back warning system assists the driver during backward movement of the vehicle by chiming if any object is sensed within the distance of 1200 mm (47 in.) behind the vehicle. This system is only a supplemental system.

NOTE:

- **Back warning system should only be considered as a supplementary function. The driver must check the rear view.**
- **The audible warning signal can be different depending on the objects.**
- **The audible warning signal might not activate in case the sensor is frozen or stained with dirt or mud.**
- **There is a chance of malfunction of the back warning system when driving in uneven surfaces such as woods, gravel road, jagged road, or gradient.**
- **Do not push, or scratch the surface of the sensor. This will likely damage the covering.**
- **The sensor system might not recognize sharp objects, thick winter clothes or sponges which absorb the frequency.**
- **Clean dirty sensors with a soft sponge and clean water.**
- **When more than two objects are sensed at the same time, the closest one will be recognized first.**

o **Such objects may not be detected by the system at very close range (approximately 300 mm).**

WARNING:
If you don't hear an audible warning sound or if the buzzer sounds intermittently when shifting the gear to "R" position, this indicate a malfunction in the back warning system. If this occurs, have your vehicle checked your Hyundai dealer as soon as possible.

C400B01P-GAT

Operation of the back warning system

Operating condition:

o The back warning system switch is pushed with the ignition key "ON".
o Sensing distance in backing up is approximately 1200 mm (47 in.).

	1st Warning	2nd Warning	3rd Warning
Sensing Distance	approx. 1200mm to 810 mm from the rear bumper	approx. 800 mm to 410 mm from the rear bumper	approx. 400 mm
Warning Sound	Buzzer beeps intermittently.	Buzzer sounds beeps more frequently.	Buzzer sounds continuously.

DRIVING FOR ECONOMY

C140A01P-GAT

You can save fuel and get more kilometers from your car if you follow these suggestions:

o Drive smoothly. Accelerate at a moderate rate. Don't make "jack-rabbit" starts or full-throttle shifts and maintain a steady cruising speed. Don't race between stop-lights. Try to adjust your speed to that of the other traffic so you don't have to change speeds unnecessarily. Avoid heavy traffic whenever possible.
Always maintain a safe distance from other vehicles so you can avoid unnecessary braking. This also reduces brake wear.
o Drive at a moderate speed. The faster you drive, the more fuel your car uses. Driving at a moderate speed, especially on the highway, is one of the most effective ways to reduce fuel consumption.

- Don't "ride" the brake or clutch pedal. This can increase fuel consumption and also increase wear on these components. In addition, driving with your foot resting on the brake pedal may cause the brakes to overheat, which reduces their effectiveness and may lead to more serious consequences.
- Take care of your tires. Keep them inflated to the recommended pressure. Incorrect inflation, either too much or too little, results in unnecessary tire wear. Check the tire pressures at least once a month.
- Be sure that the wheels are aligned correctly. Improper alignment can result from hitting curbs or driving too fast over irregular surfaces. Poor alignment causes faster tire wear and may also result in other problems as well as greater fuel consumption.
- Keep your car in good condition. For better fuel economy and reduced maintenance costs, maintain your car in accordance with the maintenance schedule in Section 6. If you drive your car in severe conditions, more frequent maintenance is required (see Section 6 for details).
- Keep your car clean. For maximum service, your Hyundai should be kept clean and free of corrosive materials. It is especially important that mud, dirt, ice, etc. not be allowed to accumulate on the underside of the car. This extra weight can result in increased fuel consumption and also contribute to corrosion.
- Travel lightly. Don't carry unnecessary weight in your car. Weight reduces fuel economy.
- Don't let the engine idle longer than necessary. If you are waiting (and not in traffic), turn off your engine and restart only when you're ready to go.
- Remember, your Hyundai does not require extended warm-up. As soon as the engine is running smoothly, you can drive away. In very cold weather, however, give your engine a slightly longer warm-up period.
- Don't "lug" or "over-rev" the engine. Lugging is driving too slowly in too high a gear resulting in the engine bucking. If this happens, shift to a lower gear. Over-revving is racing the engine beyond its safe limit. This can be avoided by shifting at the recommended speeds.
- Use your air conditioning sparingly. The air conditioning system is operated by engine power so your fuel economy is reduced when you use it.

D170B01P-GAT
(1) Speed

Avoid rapid acceleration, sudden starts, and maximum speed driving; such operation will result in more fuel consumption.

D170C01P-GAT
(2) Shifting

Shift only at an appropriate vehicle speed and engine rpm.
Always use the highest gear possible. Fuel consumption depends largely on the manner in which vehicle is driven but it is also affected by other driving conditions.

D170D01P-GAT
(3) City traffic

Frequent starting and stopping increases the average fuel consumption. Use roads with smooth traffic flow whenever possible. When driving on congested roads, avoid use of a low gear at high engine rpm.

D170E01P-GAT
(4) Idling

The vehicle consumes fuel even during idling. Avoid extended idling whenever possible.

D170F01P-GAT
(5) High speed

The higher the vehicles speed, the more fuel consumed. Avoid driving at full speed. Even a slight release of the accelerator pedal will save significant amount of fuel.

D170G01P-GAT
(6) Tire inflation pressure

Check the tire inflation pressure at regular intervals. Low tire inflation pressures increase road resistance and fuel consumption. In addition, low tire pressures adversely affect tire wear and driving control.

D170H01P-GAT
(7) Load

Do not drive with unnecessary articles in the luggage compartment.
Especially during city driving where frequent starting and stopping is necessary, the increased weight of the vehicle will greatly affect fuel consumption.
Also avoid driving with unnecessary luggage, etc., on the roof; the increased air resistance will cause more fuel consumption.

D170I01P-GAT
(8) Cold engine starting

Starting of a cold engine consumes more fuel. Unnecessary fuel consumption is also caused by keeping a hot engine running. After the engine is started, begin driving soon.

SMOOTH CORNERING

C150A01A-AAT

Avoid braking or gear changing in corners, especially when roads are wet. Ideally, corners should always be taken under gentle acceleration. If you follow these suggestions, tire wear will be held to a minimum.

WINTER DRIVING

D180A01P-GAT

Engine oil

The engine oil can become very thick at low temperatures, thus making it difficult to start the engine.
Change to a thinner oil designed for winter use before the start of cold weather; for the appropriate oil viscosity, refer to the "Consumer Information" section.

D180B01P-GAT

Engine coolant

If the temperature in your area drops below freezing, there is the danger that the coolant in the engine or radiator could freeze and cause severe damage to the engine and/or radiator.
Be sure to add a sufficient amount of antifreeze to the coolant to prevent it from freezing.
The engine coolant mixture used at the factory is intended to be left in the cooling system and provides protection against freezing for temperature as low as approximately -30°C (-20°F).
The concentration should be checked before the start of cold weather and anti-freeze added to the system if necessary.

D180C01P-GAT
Battery

The capacity of the battery is reduced at low temperatutes.
This is an inevitable result of its chemical and physical properties. This is why a very cold battery, particularly one that is not fully charged anyway, will only deliver a fraction of the starter current which is normally available.
It is recommended that you have the battery checked by an authorized HYUNDAI dealer before the start of cold weather and, if necessary, have it charged.
This not only ensures reliable starting, but a battery which is kept fully charged also has a longer life.

D180D01P-GAT
Washer fluid

To ensure proper operation of the windshield or rear window at low temperatures, anti-freeze should be added to the washer fluid at a rate of one part antifreeze to one part water.

D180E01P-GAT
Wiper blades

Before operating the wipers, check the wiper blades to confirm that they are not frozen to the windshield or tailgate. If the blades are frozen to the windshield or tailgate, do not operate the wipers until the ice has melted and the blades are freed.

D180F01P-GAT
Ventilation slots

The ventilation slots in the headlight housing on the assistant seat side should be brushed clear after a heavy snowfall so that the operation of the heating and ventilation systems will not be impaired.

C160G02A-AAT
To Keep Locks from Freezing

To keep the locks from freezing, squirt an approved de-icer fluid or glycerine into the key opening. If a lock is covered with ice, squirt it with an approved de-icing fluid to remove the ice. If the lock is frozen internally, you may be able to thaw it out by using a heated key. Handle the heated key with care to avoid burning your fingers.

NOTE:
The proper temperature for using the immobilizer key is from -40°C to 80°C. If you heat the immobilizer key over 80°C to open the frozen lock, it may cause damage to the transponder in its head.

D180G01P-GAT
Door locks

To prevent the door locks from freezing up, the lock cylinders should be masked with tape, etc., when washing the vehicle in cold weather to prevent the entrance of water.

D180H01P-GAT
Parking brake

If the atmospheric temperature is below freezing, park the vehicle with the gearshift lever in 1st or reverse and do not engage the parking brake. If the parking brake is engaged and there is moisture on the brake linings, the linings could become frozen to the brake drums, making it impossible to release the parking brake.
When parking on a steep slope, turn the front wheels in towards the kerb and chock the wheels.

D180I01P-GAT
Washing the vehicle

The salt and other chemicals spread on winter roads in some areas can have a detrimental effect on a vehicle body. You should therefore wash the vehicle as often as convenient in accordance with our care-instruction. Have a preservative applied and the underfloor protection checked at an authorized HYUNDAI dealer before and after the cold weather season.

D180J01P-GAT
Weather strip

To prevent freezing of the weather strip on the doors, the roof, etc., they should be treated with silicone grease.

D180K01P-GAT
Snow tires

The use of snow tires is recommended for driving in snow and ice. To preserve driving stability, mount snow tires of the same size and tread pattern on all four wheels.
Snow tires worn more than 50% are no longer suitable for use as snow tires.
Snow tires which do not meet specifications must not be used.

NOTE:
The laws and regulations concerning snow tires (driving speed, required use, type, etc.) vary. Find out and follow the laws and regulations in your area.

D180L01P-GAT
Tire chains

If tire chains are to be used, be sure that they are mounted on the rear wheels.
Use only tire chains which are designed for use with the tires mounted on the vehicle; use of the incorrect size or type of chain could result in damage to the vehicle body.
Before driving over long stretches of road which are free of snow, you should remove the chains to avoid damage to the tires.

NOTE:
The laws and regulations concerning tire chains vary. Find out and follow the laws and regulations in your area.

ADDITIONAL EQUIPMENT

D180M02P-GAT

It is a good idea to carry a shovel or a short-handled spade in the vehicle during the winter so that you can clear away snow if you get stuck. A small hand-brush for sweeping snow off the windscreen and rear window is also useful.

CAUTION:(If installed)

White smoke may arise from the fuel fired heater outlet in the driver's front wheel housing during winter driving. This is a normal condition. But, If a black (or gray) smoke is generated heavily, have the fuel fired heater checked by your Hyundai dealer.

If the engine stops while the fuel fired heater is operating, whizzing noise may be heard from the lower of the battery in the engine compartment.

This is due to cleaning process for fuel fired heater and a normal operation.

It will takes about 1- 3 minutes according to fuel quantity in the fuel fired heater fuel line.

LOCKING DIFFERENTIAL

D190A01HR-GAT

(Minibus/van)(If Installed)

A locking differential, if equipped, is for the rear wheel differential only. The features of this locking differential are described below:

Just as with a conventional differential, the wheel on one side is allowed to turn at a different speed from the wheel on the other side when the vehicle is cornering. The difference between the locking differential and a conventional differential is that if the wheel on one side of the vehicle loses traction, a greater amount of torque is applied to the rear wheel on the other side to improve traction.

NOTE:

In a stationary position, the LD (Locking Differential) will operate when the difference of the revolution speed between the rear right wheel and the rear left wheel occurs.

The following procedures can be used to confirm that the locking differential is functioning properly:

(1) Position the vehicle so that one wheel is on a dry paved surface and the other on ice, snow, mud, etc. Drive the vehicle, and observe the operation of the locking differential. The vehicle should not become stuck if the differential is functioning properly.
(2) Depress the accelerator pedal gradually, and then when traction is good, depress it forcefully. If the vehicle accelerates well, the differential is functioning properly.

CAUTION:

- **Never start the engine with the gearshift lever placed in the forward or reverse while one of the rear wheels is jacked up and the other in contact with the ground; doing so may cause the vehicle to jump forward.**
- **If one of the rear wheels begins to spin in mud, snow, etc., the vehicle can sometimes be driven out by depressing the accelerator pedal further; however, avoid running the engine continuously at high rpm because doing so could damage the locking differential.**

LIMITED-SLIP DIFFERENTIAL

D190A02P-GAT

(Truck)(If installed)

A limited-slip differential, if equipped, is for the rear wheel differential only. The features of this limited-slip differential are described below:
Just as with a conventional differential, the wheel on one side is allowed to turn at a different speed from the wheel on the other side when the vehicle is cornering. The difference between the limited-slip differential and a conventional differential is that if the wheel on one side of the vehicle loses traction, a greater amount of torque is applied to the rear wheel on the other side to improve traction.

NOTE:

In a stationary position, the L.S.D will operate when the torque difference between the rear right wheel and the left wheel is from 5Kgf·m to 9 Kgf·m.

The following procedures can be used to confirm that the limited-slip differential is functioning properly:

(1) Position the vehicle so that one wheel is on a dry paved surface and the other on ice, snow, mud, etc. Drive the vehicle, and observe the operation of the limited-slip differential.
The vehicle should not become stuck if the differential is functioning properly.
(2) Depress the accelerator pedal gradually, and then when traction is good, depress it forcefully. If the vehicle accelerates well, the differential is functioning properly.

CAUTION:

- **Never start the engine while one of the rear wheels is jacked up and the other in contact with the ground; doing so may cause the vehicle to jump forward.**
- **If one of the rear wheels begins to spin in mud, snow, etc., the vehicle can sometimes be driven out by depressing the accelerator pedal further; however, avoid running the engine continuously at high rpm because doing so could damage the limited-slip differential.**

IN CASE OF EMERGENCY

Tools and Jack 4-2
Spare Tire 4-3
If You Have a Flat Tire 4-6
Changing a Flat Tire 4-7
Towing 4-13
Bleeding the Fuel System 4-18
Removal of Water from the Fuel Filter 4-19
If the Engine Will Not Start 4-20
Jump Starting 4-21
If the Engine Overheats 4-22
Checking and Replacing Fuses 4-24
Headlight Aiming Adjustment 4-26
Replacement of Light Bulbs 4-27
Bulb Wattage 4-35
Fuse Panel Description 4-37

TOOLS AND JACK

E010A01P-GAT

To provide for cases of emergency, always remember where the tools and jack are stowed and how the jack is removed for use.

E010B03P-GAT

Storage places

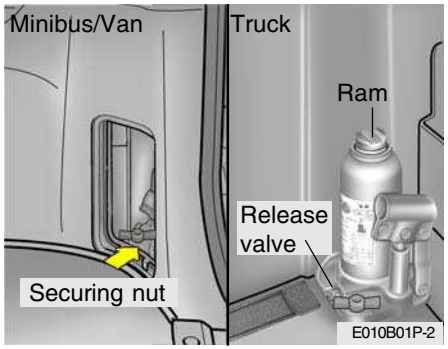

The tool box is at the right rear corner of the luggage compartment (minibus/van) or on the floor behind the seat (truck).

E010C03P-GAT

TOOLS

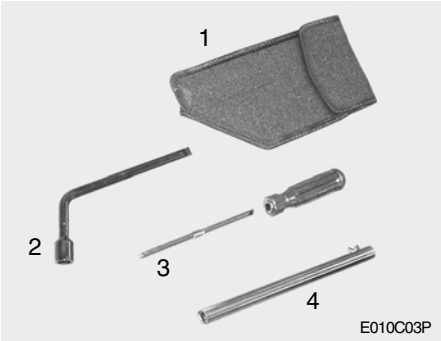

1. Tool case
2. Wheel nut wrench
3. Screwdriver
4. Spare wheel carrier wrench (Truck only)

E020A01P-GAT

JACK

To use the jack

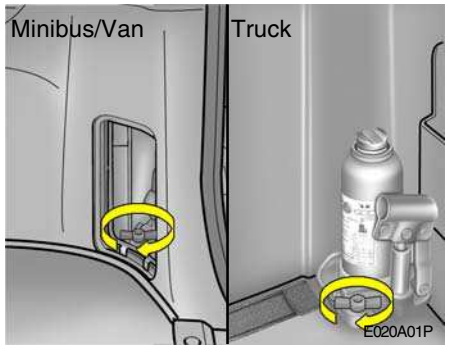

Turn the knob clockwise, and then remove the lid.
Remove the securing nut, and then take out the jack.

E030A01P-GAT

JACK HANDLE

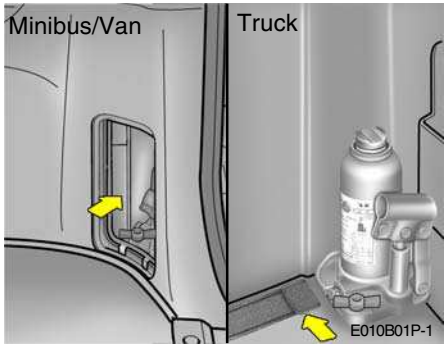

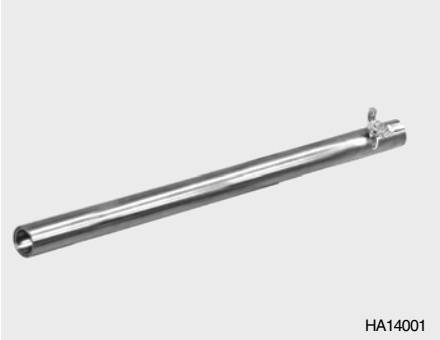

The jack handle is stored as shown in the figure.
To assemble, follow the steps.

To use the jack handle

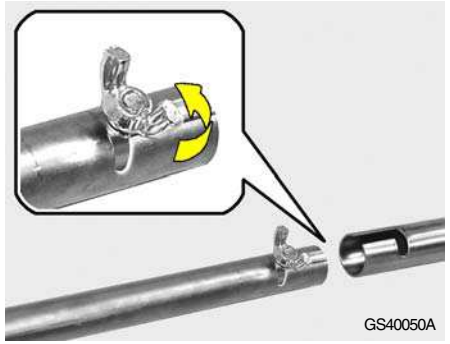

1. Loosen the holding nut and pull out the handle.

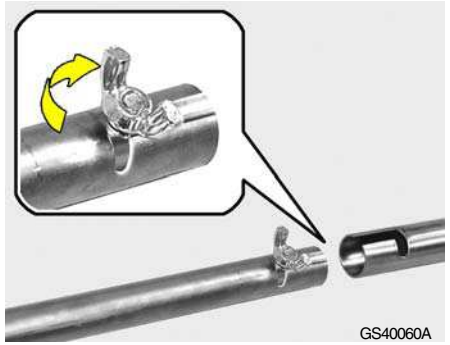

2. Insert the opposite end of the handle, and then tighten the holding nut.

E050A02P-GAT

(Minibus/Van) (If installed)

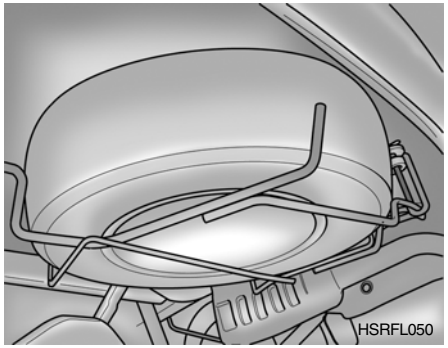

Check the air pressure of the spare tire frequently and make sure it is ready for emergency use at any time.
Maintaining the spare tire at the highest specified air pressure will ensure that it can always be used under any conditions (city/-high-speed driving, varying load weight, etc.).

NOTE:
The spare tire is located underneath the car.

To remove the spare tire: (Minibus/Van)

1. Open the tailgate

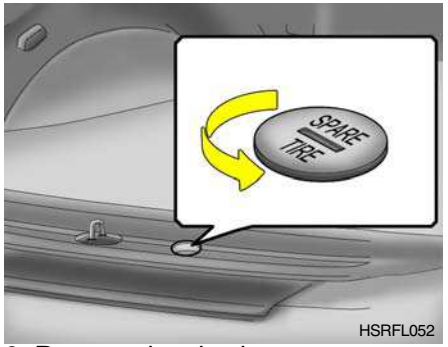

HSRFL052

2. Remove the plastic cover.

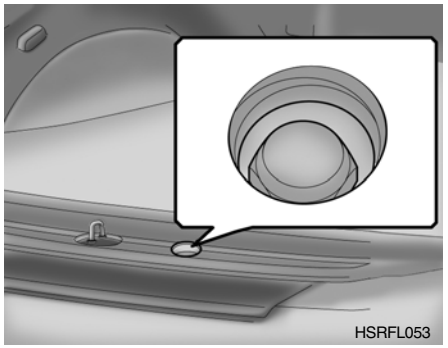
HSRFL053

3. Use the wheel nut wrench to loosen the holder mounting bolt.

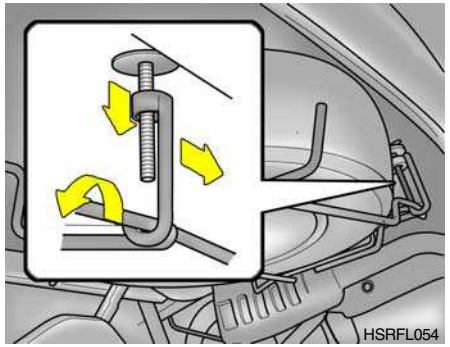
HSRFL054

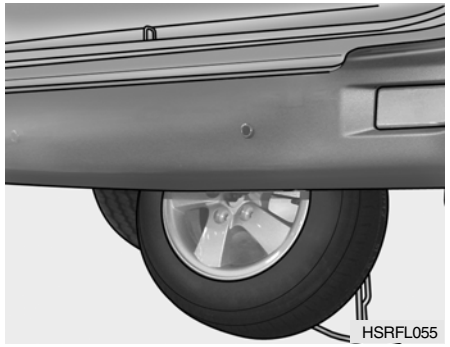
HSRFL055

4. Lift up the hanger and separate it from the holder, and then lower the hanger and remove the spare tire.

E050C03P-GAT

(Truck)

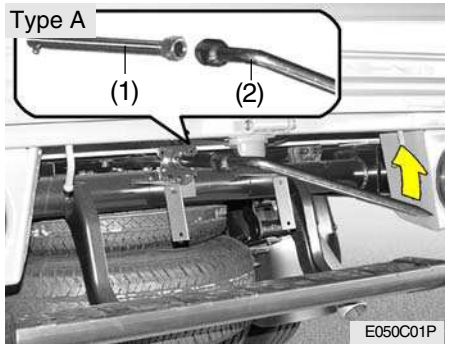

E050C01P

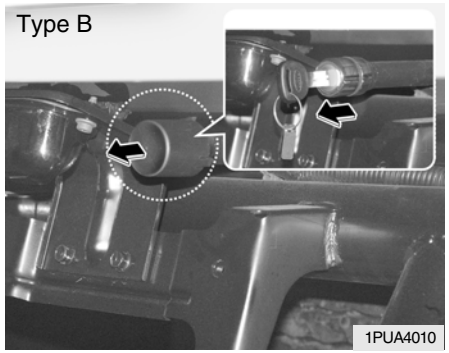

1PUA4010

1. To remove the spare tire, insert key to the cap of the cranking socket and then remove the cap. (Type B only)

2. Connect the spare wheel carrier wrench (1) with the wheel nut wrench (2).
3. Insert the spare wheel carrier wrench into the hole in the spare tire carrier then turn the wheel nut wrench counterclockwise, and the spare tire comes down.

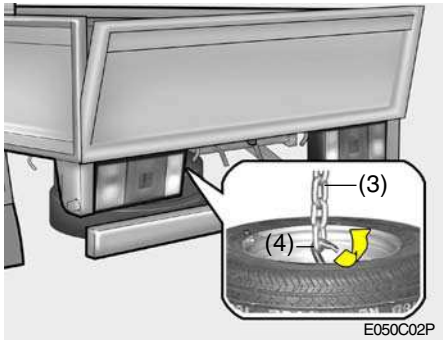

4. Disconnect the steel wire (3) from the tire support hook (4) after the spare tire comes down completely.
5. To install the spare tire, build the spare tire as following.

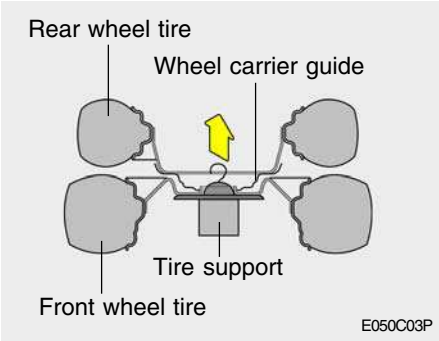

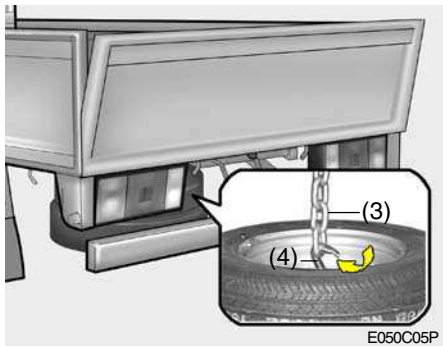

6. Connect the steel wire (3) with the support hook (4).

7. Insert the spare wheel carrier wrench into the hole in the spare tire carrier then turn the wheel nut wrench clockwise.
8. After the spare tire fully raised, tighten by hand to about 30 kg·f (295 N). Then, remove the spare tire carrier wrench with care not to turn it in the reverse direction. Now, ensure that the tire is secured in position.

CAUTION:
If you cannot secure the spare tire in position, load it on the cargo deck and ask your nearest service shop for inspection.

E050B02P-GAT

To reinstall the spare tire

Installation is the reverse order of disassembly.

CAUTION:
The spare tire should always be securely in position.
If a flat tire is changed, put the flat tire in the spare tire mounting position, and use the wheel nut wrench to secure it firmly.

E050D01P-GAT

Spare tire anti-theft device (If installed)

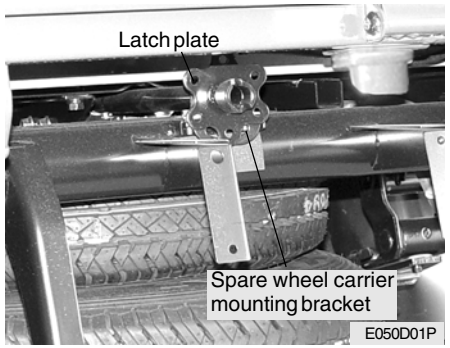

This device is designed to protect the spare tire theft.
After fitting the latch plate hole in spare wheel carrier mounting bracket with a spare wheel carrier wrench, lock with a key bought personally.

D050A01HP-GAT

If a tire goes flat while you are driving:

1. Take your foot off the accelerator pedal and let the car slow down while driving straight ahead. Do not apply the brakes immediately or attempt to pull off the road as this may cause a loss of control. When the car has slowed to such a speed that it is safe to do so, brake carefully and pull off the road. Drive off the road as far as possible and park on firm, level ground. If you are on a divided highway, do not park in the median area between the two traffic lanes.
2. When the car is stopped, turn on your emergency hazard flashers, set the parking brake and put the transmission in "P" (automatic transmission) or reverse (manual transmission).
3. Have all passengers get out of the car. Be sure they all get out on the side of the car that is away from traffic.
4. Change the tire according to the instructions provided as following.

CHANGING A FLAT TIRE

D060A01HP-GAT

The procedure described on the following pages can be used to rotate tires as well as to change a flat tire. When preparing to change a flat tire, check to be sure the gear selector lever is in "P" (automatic transmission) or reverse gear (manual transmission) and that the parking brake is set, then:

D060A01P-GAT

1. Obtain Spare Tire and Tool

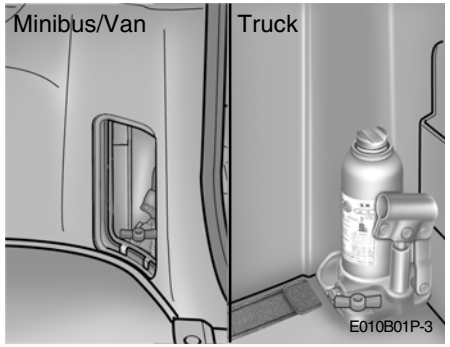

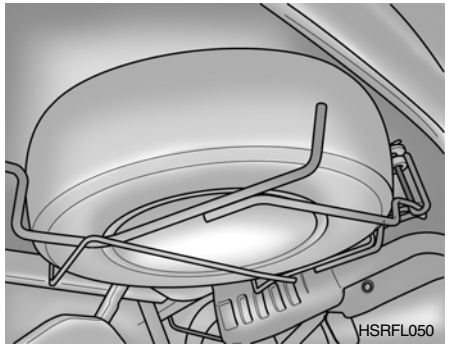

Remove the spare tire and take out the jack and tool bag.

NOTE:
The spare tire is located underneath the car.

D060C01A-AAT

2. Block the Wheel

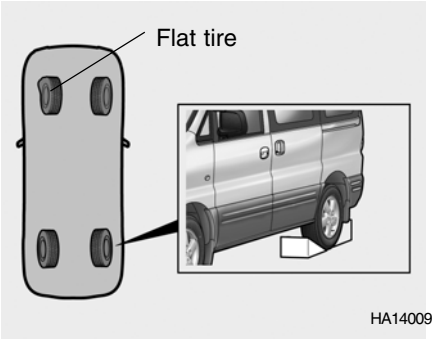

Block the wheel that is diagonally opposite from the flat tire to keep the vehicle from rolling when the car is raised on the jack.

D060D01A-AAT

3. Loosen Wheel Nuts

The wheel nuts should be loosened slightly before raising the car. To loosen the nuts, turn the wrench handle counterclockwise. When doing this, be sure that the socket is seated completely over the nut so it cannot slip off. For maximum leverage, position the wrench so the handle is to the right as shown in the illustration. Then, while holding the wrench near the end of the handle, pull up on it with steady pressure. Do not remove the nuts at this time. Just loosen them about one-half turn.

D060E01P-AAT

4. Put the Jack in Place

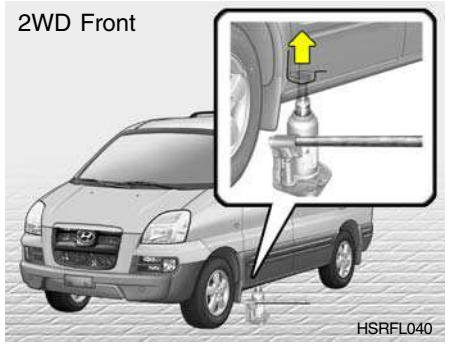

The method for jacking up the vehicle should be remembered in order to change a tire in the event of a puncture and in order to install tire chains.

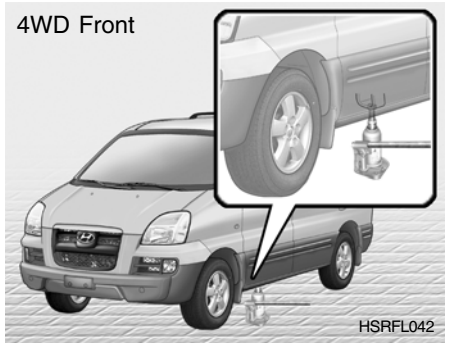

After stopping the engine and applying the parking brake on a flat level surface, also use chocks to hold the wheels.

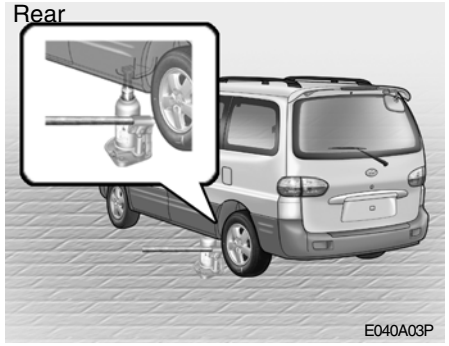

Position the jack only at the specified points indicated in the illustration, and the use of the jack at other points could damage the vehicle body.

D060F02P-GAT

5. Raising the Car

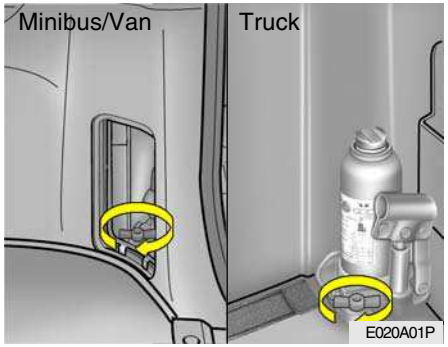

Open the lid at the right corner of the luggage compartment (minibus/van) or on the floor behind the seat (truck). Loosen the securing nut, and then take out the jack.

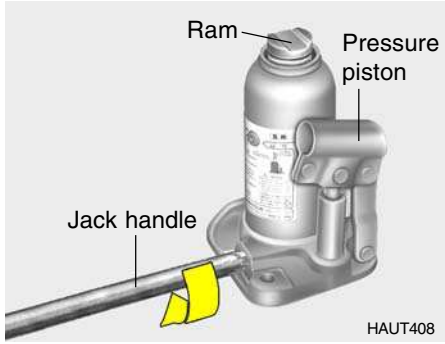

Using the jack handle, turn the release valve clockwise until it reaches a stop.

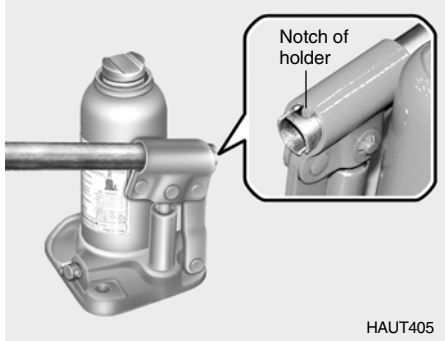

Then fit the jack handle into the holder, and align the groove of the jack handle with the notch of the holder.

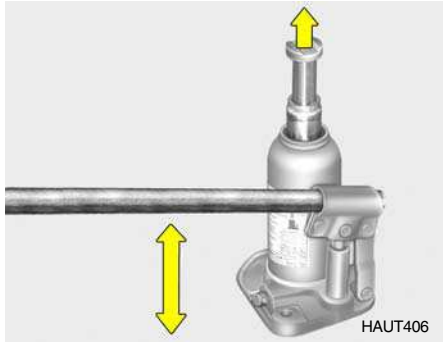

Move the jack handle up and down to raise the ram until just before the jack contacts the jacking point of the car.
Position the jack with the jack handle.
Position it only at the specified points indicated in the "Put the Jack in Place".
Use of the jack at other points could damage the car.
Moving the jack handle up and down to raise the ram.
As the jack begins to raise the vehicle, double check that it is properly positioned and will not slip.

Raise the car high enough so that the fully inflated spare tire can be installed. To do this, you will need more ground clearance than is required to remove the flat tire.

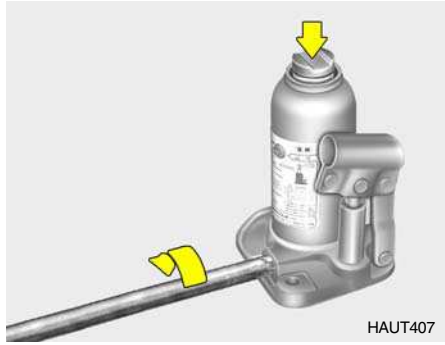

Using the jack handle, turn the release valve counterclockwise slow to lower the ram, and then take out the jack. Press the piston down all the way and turn the release valve clockwise as far as possible.

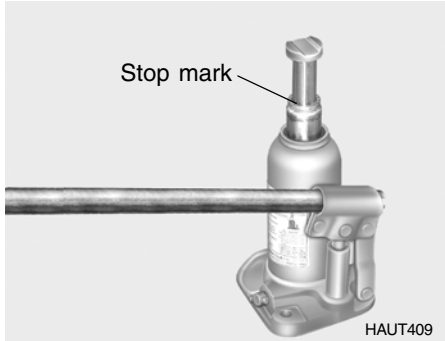

CAUTION:

- **Use only the jack included with the vehicle and use it only for changing a wheel.**
- **Position the jack on a hard level surface.**
- **If the release valve is loosened by turning it 2 or more times in the counterclockwise direction, the jack's oil will leak and the jack cannot be used.**
- **This jack is hydraulic, and the ram is a two-stage type. When both rams are raised and the stop mark(Green paint) of the upper ram becomes visible, stop jacking immediately.**
  Further extension of the ram may damage the jack.
- **When the jack is used, be sure that there is no one in or under the vehicle.**
- **When jacking up the vehicle, do so only until the tires are slightly lifted from the ground. It is dangerous to jack up the vehicle more than that much.**
- **It is very dangerous if the jack somehow slips, so never leave the vehicle in the jacked-up position, and never shake the vehicle while it is raised.**

WARNING:

Do not get under the car when it is supported by the jack! This is very dangerous as the vehicle could fall and cause serious injury or death. No one should stay in the car while the jack is being used.

D060G01A-AAT

6. Changing Wheels

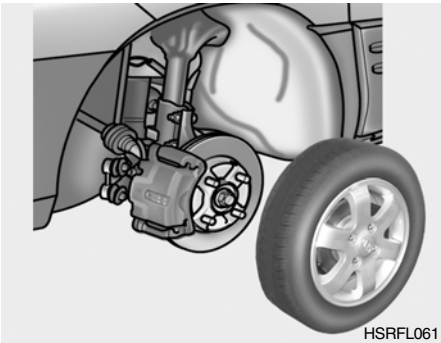

Use the wrench to loosen the wheel nuts, then remove them with your fingers. Remove the wheel cover (if installed) from the wheel and slide the wheel off the studs and lay it flat so it cannot roll away. To put the wheel on the hub, pick up the spare tire, line up the holes with the studs and slide the wheel onto them. If this is difficult, tip the wheel slightly and get the top hole in the wheel lined up with the top stud. Then jiggle the wheel back and forth until the wheel can be slid over the other studs.

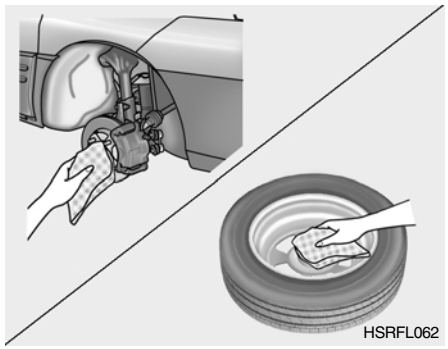

WARNING:
Wheel covers may have sharp edges. Handle them carefully to avoid possible severe injury.
Before putting the wheel into place, be sure that there is nothing on the hub or wheel (such as mud, tar, gravel, etc.) that interferes with the wheel from fitting solidly against the hub. If there is, remove it. If there is not good contact on the mounting surface between the wheel and hub, the wheel nuts could come loose and cause the loss of a wheel. Loss of a wheel may result in loss of control of the vehicle. This may cause serious injury or death.

D060H01A-AAT

7. Reinstall Wheel Nuts

To reinstall the wheel cover, hold it on the wheel and put the wheel nuts on the studs and tighten them finger tight. The nuts should be installed with their small diameter ends directed inward. Jiggle the tire to be sure it is completely seated, then tighten the nuts with your fingers again.

D060I01P-GAT

8. Lower Vehicle and Tighten Nuts

Lower the car to the ground by moving the jack handle up and down. Then position the wrench as shown in the drawing and tighten the wheel nuts. Be sure the socket is seated completely over the nut. Do not stand on the wrench handle or use an extension pipe over the wrench handle.
Go around the wheel tightening every other nut until they are all tight. Then double-check each nut for tightness. After changing wheels, have a technician tighten the wheel nuts to their proper torque as soon as possible.

Tightening torque:

	Front	Rear
Minibus, Van	12 to 14 kg.m (118 to 137 N.m, 87 to 101 lbs.ft)	12 to 14 kg.m (118 to 137 N.m, 87 to 101 lbs.ft)
Truck	18 to 22 kg.m (177 to 216 N.m, 130 to 159 lbs.ft)	18 to 22 kg.m (177 to 216 N.m, 130 to 159 lbs.ft)

E060J01A-AAT

After changing wheels

If you have a tire gauge, remove the valve cap and check the air pressure. If the pressure is lower than recommended, drive slowly to the nearest service station and inflate to the correct pressure. If it is too high, adjust it until it is correct. Always reinstall the valve cap after checking or adjusting tire pressure. If the cap is not replaced, air may leak from the tire. If you lose a valve cap, buy another and install it as soon as possible.
After you have changed wheels, always secure the flat tire in its place and return the jack, jack handle, and tools to their proper storage locations.

IF YOUR VEHICLE MUST BE TOWED

D080A02HR-GAT

If your vehicle has to be towed, it should be done by your Hyundai dealer or a commercial tow truck service. This will help assure that your vehicle is not damaged in towing. Also, professionals are generally aware of local laws governing towing. In any case, rather than risk damage to your car, it is suggested that you show this information to the tow truck operator. Be sure that a safety chain system is used and that all local laws are observed.
It is recommended that your vehicle be towed with a wheel lift and dollies or flatbed equipment with all the wheels off the ground.

CAUTION:

- **Your vehicle can be damaged if towed incorrectly!**
- **Be sure the transmission is in neutral.**
- **When the engine will not start, be sure the steering is unlocked by placing the key in the "ACC" position.**

D080B02HP-GAT

Towing the 2 Wheel Drive Vehicle

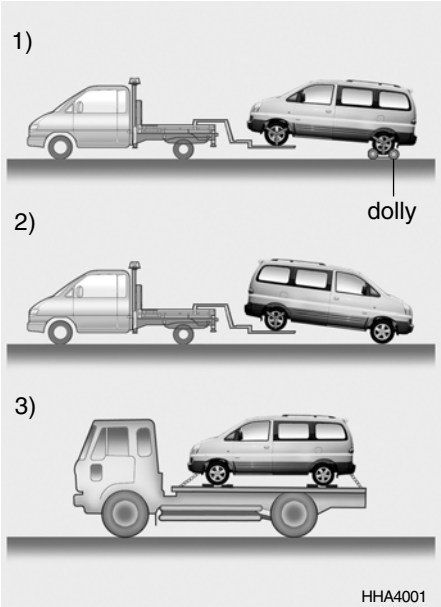

Your vehicle can be towed by wheel lift type truck (1), (2) or flatbed equipment (3).

CAUTION:

- **When towing the vehicle, take care not to cause damage to the bumper or underbody of the vehicle.**

- **Do not tow with sling type truck as this may cause damage to the bumper or underbody of the vehicle.**

1) If any of the loaded wheels or suspension components are damaged or the vehicle is being towed with the rear wheels on the ground, use a towing dolly under the rear wheels.

o Manual Transmission:
If you do not use a towing dolly, place the ignition key in the "ACC" position and put the transaxle in "N (Neutral)".

CAUTION:
Do not tow with the key removed or in the "LOCK" position when towing from the front without a towing dolly.

o Automatic Transmission:
Be sure to use a towing dolly under the rear wheels.

CAUTION:

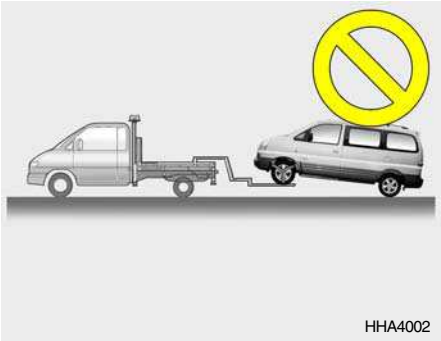

A vehicle with an automatic transmission should never be towed from the front with the rear wheels on the ground. This can cause serious damage to the transmission.

2) If the vehicle is being towed with the front wheels on the ground, be sure the parking brake is released.

NOTE:
Before towing, check the level of the automatic transmission fluid. If it is below the "HOT" range on the dipstick, add fluid. If you cannot add fluid, a towing dolly must be used.

3) It is recommended that your vehicle be towed with all the wheels off the ground.

D080C01HP-GAT

Towing the 4 Wheel Drive Vehicle

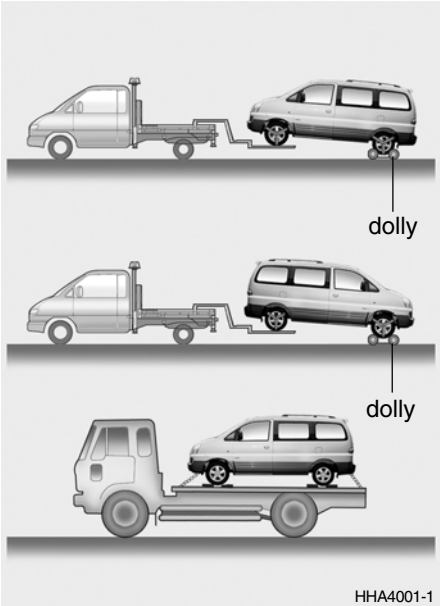

When towing the 4WD vehicle, it must be towed by lifting all 4 wheels or using the towing dolly.

CAUTION:

- **The 4WD vehicle should never be towed with the wheels on the ground. This can cause serious damage to the transmission or the 4WD system.**
- **When towing the vehicle, take care not to cause damage to the bumper or underbody of the vehicle.**

- **Do not tow with sling type truck as this may cause damage to the bumper or underbody of the vehicle.**

E070A02P-GAT

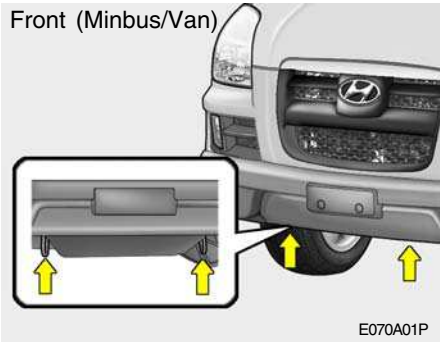

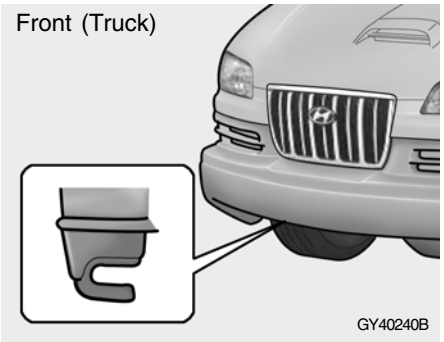

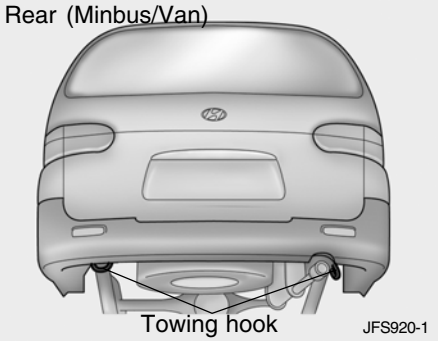

Tow at the illustrated point. Using any part other than the designated towing hooks could result in damage to vehicle body. The regulations concerning towing may differ from country to country.
It is recommended that you may obey the regulations in your area. If your vehicle is to be towed, pay careful attention to the following points.

1. Move the gearshift lever to neutral.
2. Be sure the towing speed is within the legal limit.
3. On vehicles with steering lock system, turn the ignition switch to "ACC" to unlock the steering wheel. If you will be using the turn signals while being towed, turn the ignition switch to "ON" position.
4. To prevent the exhaust gas from entering the towing vehicle, set the air selection lever on the heater control to the recirculation position.
5. Turn on the hazard warning lamps.
6. During towing, make sure that close contact is maintained between the drivers of both vehicles, and that the vehicles travel at low speed. Avoid abrupt starting or stopping which might subject the vehicles to shock.
7. If the transmission is malfunctioning or damaged, tow the vehicle with the rear wheels raised off the ground.
8. If the vehicle is equipped with a brake booster system, the brake boosting power will be lost and greater force will be required to depress the brake pedal.
9. If the vehicle is equipped with a power steering system, greater force will be required to operate the steering wheel.

NOTE:

- **Your vehicle should only be used to tow another vehicle if the weight of the other vehicle is less than that of your vehicle.**
- **Before towing, check the level of the automatic transaxle fluid. If it is below the "HOT" range on the dipstick, add fluid. If you cannot add fluid, a towing dolly must be used.**

C190A01A-GAT

TRAILER OR VEHICLE TOWING

If you are considering towing with your car, you should first check with your Province Department of Motor Vehicles to determine their legal requirements. Since laws vary from province to province, the requirements for towing trailers, cars, other types of vehicles, or apparatus may differ. Ask your Hyundai dealer for further details before towing.

CAUTION:
Do not do any towing with your car during its first 2,000 km (1,200 miles) in order to allow the engine to properly break in. Failure to heed this caution may result in serious engine or transmission damage.

C190B01S-AAT

Trailer Hitches

Select the proper hitch and ball combination, making sure that its location is compatible with that of the trailer or vehicle being towed. Use a quality non-equalizing hitch which distributes the tongue load uniformly throughout the chassis.

The hitch should be bolted securely to the car and installed by a qualified technician. DO NOT USE A HITCH DESIGNED FOR TEMPORARY INSTALLATION AND NEVER USE ONE THAT ATTACHES ONLY TO THE BUMPER.

C190C02P-GAT

Trailer Brakes

If your trailer is equipped with a braking system, make sure it conforms to federal and/or local regulations and that it is properly installed and operating correctly.

NOTE:
If you tow a trailer or vehicle, your car will require more frequent maintenance due to the additional load. See "Maintenance Under Severe Usage Conditions" on page 6-11.

CAUTION:
- **Never connect a trailer brake system directly to the vehicle brake system.**
- **When towing a trailer on steep grades (in excess of 6%) pay close attention to the engine coolant temperature gauge to ensure the engine does not overheat. If the needle of the coolant temperature gauge moves across the dial towards "H" (HOT), pull over and**

stop as soon as it is safe to do so, and allow the engine to idle until it cools down. You may proceed once the engine has cooled sufficiently.

C190D01A-GAT

Safety Chains

Should the hitch connection between your car and the trailer or vehicle you are towing fail, the trailer or vehicle could wander dangerously across other lanes of traffic and ultimately collide with another vehicle.
To eliminate this potentially dangerous situation, safety chains, attached between your car and the trailer or towed vehicle, are required in most provinces.

C190E05P-GAT

Trailer Weight Limit

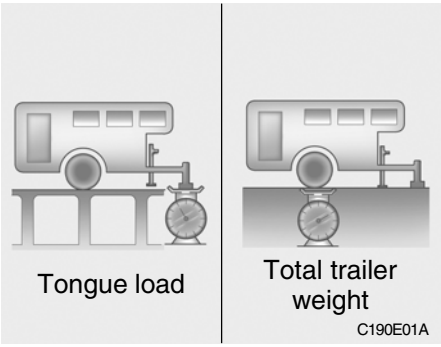

Tongue loads can be increased or decreased by redistributing the load in the trailer. This can be verified by checking the total weight of the loaded trailer and then checking the load on the tongue.

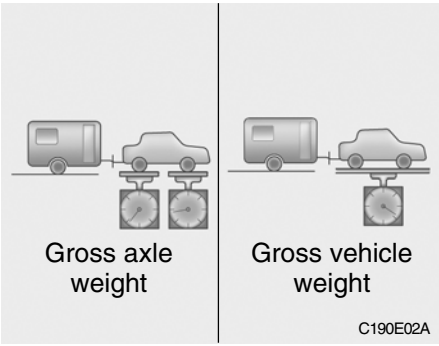

NOTE:

1. **Never load the trailer with more weight in the back than in the front. About 60% of the trailer load should be in the front half on the trailer and the remaining 40% in the rear.**
2. **The total gross vehicle weight with trailer must not exceed the Gross Vehicle Weight Rating (GVWR) shown on the vehicle identification plate (see page 1-4). The total gross vehicle weight is the combined weight of the vehicle, driver, all passengers and their luggage, cargo, hitch, trailer tongue load and other optional equipment.**

3. **The front or rear axle weight must not exceed the Gross Axle Weight Rating (GAWR) shown on the vehicle identification plate (see page 1-4). It is possible that your towing package does not exceed the GVWR but exceeds the GAWR. Improper trailer loading and/or too much luggage in the tail gate can overload the rear axle. Redistribute the load and check the axle weight again.**
4. **The maximum permissible static vertical load on the coupling device is 60 kg.**

Minibus/Van

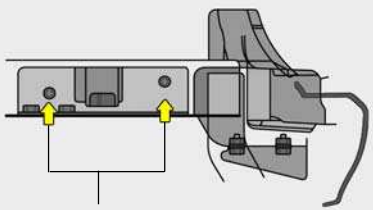

C190E01P

Truck

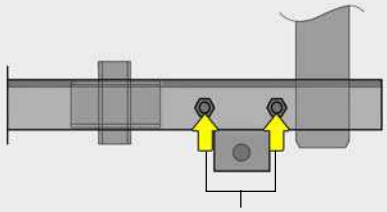

C190E02P

5. **The maximum permissible overhang of the coupling point:**

mm(in.)

Short	Minibus,Van	1120(44)
Long	Minibus,Van	1190(46)
	Truck (1 ton)	1240(48)
Extra Long (1.25 ton)	Standard	1370(53)
	Super	

6. **The maximum permissible mass of the coupling device is 25 kg. (Truck only)**

CAUTION:
The following specifications are recommended when towing a trailer. The loaded trailer weight cannot safely exceed the values in the following chart.

kg. (lbs)

	Maximum Towable Weight		
	Trailer weight	Tongue load	
		Minibus, Van	Truck
With brake Type	1,500 (3,307)	60 (132.3)	75 (165.4)
Without brake Type	700 (1,543)	-	

WARNING:

- **Improperly loading your car and trailer can serious affect its steering and braking performance causing a crash in which you may be seriously injured.**
- **For automatic transmission vehicles, the trailer should be towed with the towing vehicle unloaded, with the exception of the driver. Otherwise, the automatic transmission oil temperature may rise to a temperature that may result in serious damage of the automatic transmission.**

C190F02A-GAT

Trailer or Vehicle Towing Tips

1. Before towing, check hitch and safety chain connections as well as proper operation of the trailer running lights, brake lights, and turn signals.
2. Always drive your vehicle at a moderate speed (Less than 100 km/h).
3. Trailer towing requires more fuel than normal conditions.
4. To maintain engine braking efficiency and electrical charging performance, do not use fifth gear (manual transmission) or overdrive (automatic transmission).
5. Always secure items in the trailer to prevent load shift while driving.
6. Check the condition and air pressure of all tires on the trailer and your car. Low tire pressure can seriously affect the handling. Also check the spare tire.
7. The vehicle/trailer combination is more affected by crosswind and buffeting. When being passed by a large vehicle, keep a constant speed and steer straight ahead. If there is too much wind buffeting, slow down to get out of the other vehicle's air turbulence.
8. When parking your car and trailer, especially on a hill, be sure to follow all the normal precautions. Turn your front wheel into the curb, set the parking brake firmly, and put the transmission in 1st or "R" (manual transmission) or "P" (automatic transmission). In addition, place wheel chocks at each of the trailer's tires.
9. If the trailer has electric brakes, start your vehicle and trailer moving, and then apply the trailer brake controller by hand to be sure the brakes are working. This lets you check your electrical connection at the same time.
10. During your trip, check occasionally to be sure that the load is secure, and that the lights and any trailer brakes are still working.
11. Avoid jerky starts, sudden acceleration or sudden stops.
12. Avoid sharp turns and rapid lane changes.

13. Avoid holding the brake pedal down too long or too frequently. This could cause the brakes to overheat, resulting in reduced braking efficiency.
14. When going down a hill, shift into a lower gear and use the engine braking effect. When ascending a long grade, downshift the transmission to a lower gear and reduce speed to reduce chances of engine overloading and/or overheating.
15. If you have to stop while going uphill, do not hold the vehicle in place by pressing on the accelerator. This can cause the automatic transmission to overheat. Use the parking brake or footbrake.

NOTE:
When towing, check transmission fluid more frequently.

CAUTION:
If overheating should occur when towing, (temperature gauge reads near red zone), taking the following action may reduce or eliminate the problem.

1. **Turn off the air conditioner.**
2. **Reduce highway speed.**
3. **Select a lower gear when going uphill.**
4. **While in stop and go traffic, place the gear selection in park or neutral and idle the engine at a higher speed.**

E090A01P-GAT

(Diesel Motor)

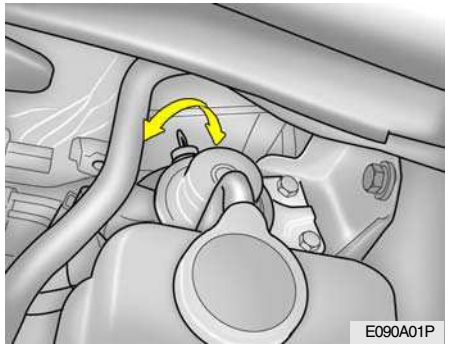

The fuel system should be bled to remove air as described in the illustration if the fuel supply is exhausted during travel, when the fuel filter is replaced, or if the vehicle is not used for a long time.

1. Loosen the air plug at the top of the fuel filter.

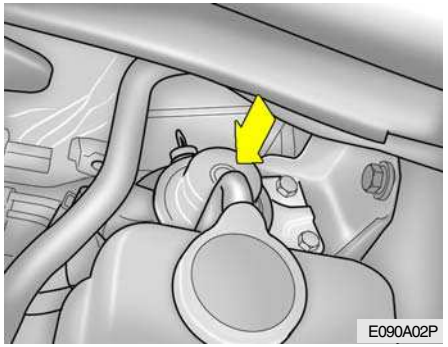

2. Pump the hand pump until there are no more bubbles in the fuel coming out of the air plug. When doing this, place a cloth around the air plug to prevent the escaping fuel from spewing about.
3. Tighten the air plug when there are no more bubbles in the fuel.
4. Continue pumping until the hand pump becomes stiff.
5. Finally, check to be sure that there is no leakage of fuel.
   If in doubt, consult your nearest authorized HYUNDAI dealer.

WARNING:

- **Do not smoke or have any other open flame near the vehicle while bleeding the fuel system.**
- **Be sure to carefully clean away any fuel which spilled onto nearby parts coming out of the air plug, because such accumulations of fuel might ignite and cause a fire.**

REMOVAL OF WATER FROM THE FUEL FILTER

E100A02P-GAT

(Diesel Motor)

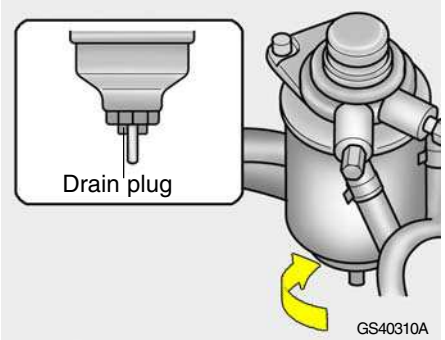

If the fuel filter warning lamp illuminates during driving, it indicates that water has accumulated in the fuel filter. If this occurs, remove the water as described below.

1. Loosen the drain plug at the bottom of the fuel filter.

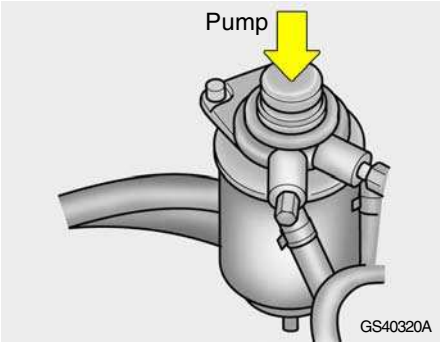

2. Operate the hand pump slowly 6 or 7 times in order to force the water out through the drain plug.
3. Tighten the drain plug when water no longer comes out.
4. Loosen the air plug and bleed the air.
   (Refer to "Bleeding the fuel system".)
5. Check to be sure that the warning lamp illuminates when the ignition key is turned to "ON", and that it goes off when the engine is started. If in doubt, consult your nearest authorized HYUNDAI dealer.

NOTE:
It is recommended that water accumulated in the fuel filter should be removed by an authorized Hyundai dealer.

WARNING:
- **Do not smoke or have any other open flame near the vehicle while bleeding the fuel system.**
- **Be sure to carefully wipe away any water drained out in this manner, because the fuel mixed in the water might be ignited and result in a fire.**

IF THE ENGINE WILL NOT START

D010A01A-AAT

WARNING:
If the engine will not start, do not push or pull the car to start it. This could result in a collision or cause other damage. In addition, push or pull starting may cause the catalytic converter to be overloaded and create a fire hazard.

D010B01A-AAT

If Engine Doesn't Turn Over or Turns Over Slowly

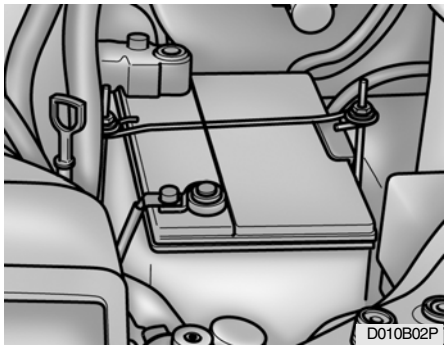

1. If your car has an automatic transaxle, be sure the gear selector lever is in "N" or "P" and the emergency brake is set.
2. Check the battery connections to be sure they are clean and tight.
3. Turn on the interior light. If the light dims or goes out when you operate the starter, the battery is discharged.
4. Check the starter connections to be sure they are securely tightened.
5. Do not push or pull the vehicle to start it. See instructions for "Jump Starting".

D010C02A-AAT

If Engine Turns Over Normally but Does Not Start

1. Check fuel level.
2. With the key in the "OFF" position, check all connectors at ignition coils and spark plugs(For Gasoline Engine) or check all connectors at glow plug and glow plug relay(For Diesel Engine). Reconnect any that may be disconnected or loose.
3. Check fuel line in the engine room.
4. If engine still refuses to start, call a Hyundai dealer or seek other qualified assistance.

D010D01A-AAT

If the Engine Stalls While Driving

1. Reduce your speed gradually, keeping a straight line. Move cautiously off the road to a safe place.
2. Turn on your emergency flashers.
3. Try to start the engine again. If your vehicle will not start, contact a Hyundai dealer or seek other qualified assistance.

JUMP STARTING

E110A02P-GAT

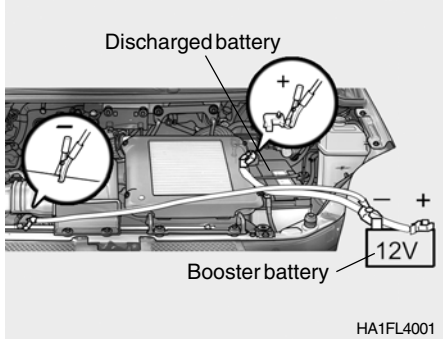

WARNING:
The gas produced by the battery during the jump-start operation is highly explosive. If these instructions are not followed exactly, serious personal injury and damage to the vehicle may occur! If you are not sure how to follow this procedure, seek qualified assistance. Automobile batteries contain sulfuric acid. This is poisonous and highly corrosive. When jump starting, wear protective glasses and be careful not to get acid on yourself, your clothing or on the car.

1. Both batteries must be 12V. The capacity (Ah) of the battery supplying current should not be significantly below that of the discharged battery.
2. Use only heavy-duty jumper cables.
3. A discharged battery can freeze. A frozen battery must be thawed out before connecting the jumper cables.
4. There should be no contact between the two vehicles; otherwise current may flow when the positive terminal is connected.
5. The discharged battery must be correctly connected to the vehicle electrical system.
6. Run the engine of the vehicle supplying current.
7. Connect the jumper cables as follows:

   (1) Connect one end of one jumper cable to the positive terminal of the flat battery, and the other end to the positive terminal of the booster battery.
   (2) Connect one end of the other jumper cable to the negative terminal of the booster battery, and the other end to the engine block of the vehicle with the flat battery at the point farthest from the battery.

CAUTION:

- **Do not allow the jumper cable clips to touch one another.**
- **Do not connect the jumper cable to the negative terminal of the flat battery.**
  The battery generates explosive gas, and a spark caused when the jumper cable is disconnected from the negative terminal could ignite this gas and cause an explosion.
- **Be careful that the jumper cable becomes not caught in the cooling fan, etc.**

8. Start engine as described "Starting the engine" in section 3.
9. After the engine is started, disconnect the cables in the reverse order.

D030A02TB-AAT

If your temperature gauge indicates overheating, you experience a loss of power, or hear loud pinging or knocking and the engine is probably too hot. If this happens to you, you should:

1. Pull off the road and stop as soon as it is safe to do so.
2. Place the gear selector lever in "P" (automatic transmission), or neutral (manual transmission) and set the parking brake. If the air conditioning is on, turn it off.
3. If engine coolant is running out under the car or steam is coming out from the hood, stop the engine. Do not open the hood until the engine coolant has stopped running or the steaming has stopped. If there is no visible loss of engine coolant and no steam, leave the engine running and check to be sure the engine cooling fan is operating. If the fan is not running, turn the engine off.

4. Check to see if the water pump drive belt is missing. If it is not missing, check to see that it is tight. If the drive belt seems to be satisfactory, check for engine coolant leaking from the radiator, hoses or under the car. (If the air conditioning had been in use, it is normal for cold water to be draining from it when you stop).

WARNING:
While the engine is running, keep hair, hands, long hair and clothing away from moving parts such as the fan and drive belts to prevent injury.

WARNING (Diesel only):
Never work on injection system with engine running or within 30 seconds after shutting off engine. High pressure pump, rail, injectors and high pressure pipes are subject to high pressure even after the engine stopped. The fuel jet produced by fuel leaks may cause serious injury, if it touch the body. People using pacemakers should not move than 30cm closer to the ECU or wiring harness within the engine room while engine is running, since the high currents in the Common Rail system produce considerable magnetic fields.

5. If the water pump drive belt is broken or engine coolant is leaking out, stop the engine immediately and call the nearest Hyundai dealer for assistance.

WARNING:
Do not remove the radiator cap when the engine is hot. This can allow coolant to be blown out of the opening and cause serious burns.

6. If you cannot find the cause of the overheating, wait until the engine temperature has returned to normal. Then, if the engine coolant has been lost, carefully add coolant to the reservoir (page 8-12) to bring the fluid level in the reservoir up to the halfway mark.
7. Proceed with caution, keeping alert for further signs of overheating. If overheating happens again, call a Hyundai dealer for assistance.

CAUTION:
Serious loss of engine coolant indicates there is a leak in the cooling system and this should be checked as soon as possible by a Hyundai dealer.

CHECKING AND REPLACING FUSES

G200A01A-AAT

Replacing a Fusible Link

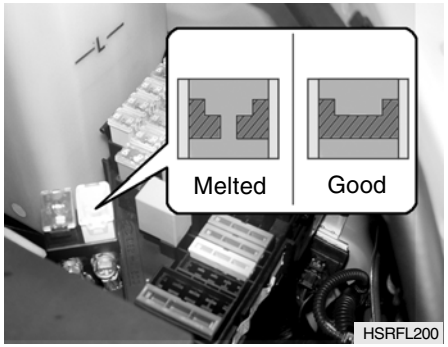

A fusible link will melt if the electrical circuits from the battery are ever overloaded, thus preventing damage to the entire wiring harness. (This could be caused by a short in the system drawing too much current.) If this ever happens, have a Hyundai dealer determine the cause, repair the system and replace the fusible link. The fusible links are located in a fuse box for easy inspection.

CAUTION:
When replacing a fusible link, never use anything but a new fusible link with the same or lower amperage rating. Never use a piece of wire or a higher-rated fusible link. This could result in serious damage and create a fire hazard.

G200B02A-AAT

Replacing Accessory Fuse

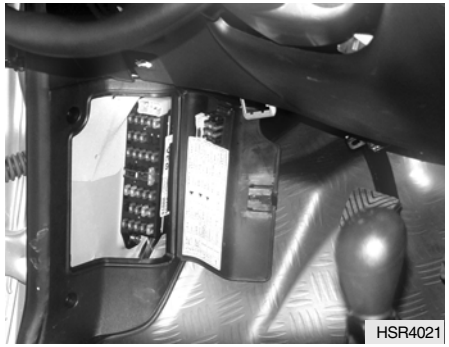

The fuse box for the lights and other electrical accessories will be found low on the dashboard on the driver's side. Inside the box you will find a list showing the circuits protected by each fuse. If any of your car's lights or other electrical accessories stop working, a blown fuse could be the reason. If the fuse has burned out, you will see that the metal strip inside the fuse has burned through.

If you suspect a blown fuse, follow this procedure:

1. Turn off the ignition and all other switches.
2. Open the fuse box and examine each fuse. Remove each fuse by pulling it toward you (a small "fuse puller" tool is contained in the fuse box to simplify this operation).
3. Be sure to check all other fuses even if you find one that appears to have burned out.

HSR4022

4. Replace the blown fuse by pressing a new fuse of the same rating into place. The fuse should be a snug fit. If it is not, have the fuse clip repaired or replaced by a Hyundai dealer. If you do not have a spare fuse, you may be able to borrow a fuse of the same or lower rating from an accessory you can temporarily get along without (the radio or cigarette lighter, for example). Always remember to replace the borrowed fuse.

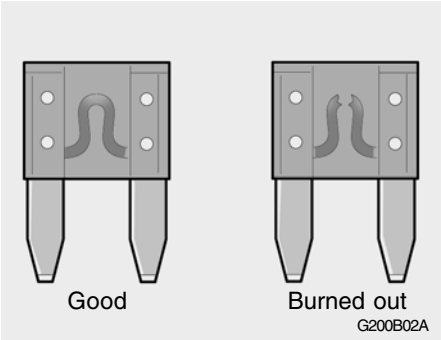

CAUTION:
A burned-out fuse indicates that there is a problem in the electrical circuit. If you replace a fuse and it blows as soon as the accessory is turned on, the problem is serious and should be referred to a Hyundai dealer for diagnosis and repair. Never replace a fuse with anything except a fuse with the same or a lower amperage rating. A higher capacity fuse could cause damage and create a fire hazard.

NOTE:
See page 4-40 for the fuse panel descriptions.

HEADLIGHT AIMING ADJUSTMENT

G290A03P-AAT

Before performing aiming adjustment, make sure of the following.

1. Keep all tires inflated to the correct pressure.
2. Place the vehicle on level ground and press the front bumper and rear bumper down several times.
3. See that the vehicle is unloaded (except for full levels of coolant, engine oil and fuel, and spare tire, jack, and tools). Have the driver or equivalent weight placed in driver's seat.
4. Clean the head lights lens and turn on the headlight (Low beam).

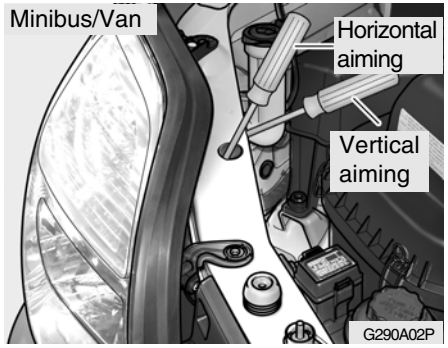

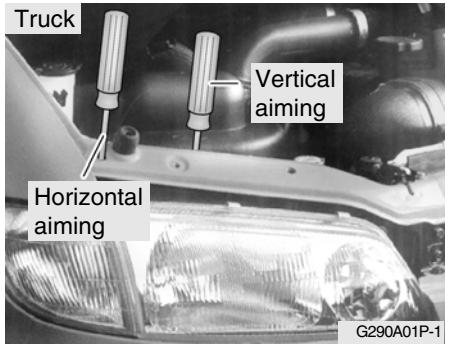

5. Open the hood.
6. Draw the vertical line (through the center of each headlight beam pattern) and the horizontal line (through the center of each headlight beam pattern) on the aiming screen.
   And then, draw a horizontal parallel line at 30 mm (1.18 in.) under the horizontal line.
7. Adjust each cut-off line of the low beam to the parallel line with a phillips screwdriver - VERTICAL AIMING.
8. Adjust each cut-off line of the low beam to the each vertical line with a phillips screwdriver - HORIZONTAL AIMING.

G290B03P-AAT

Adjustment After Headlight Assembly Replacement

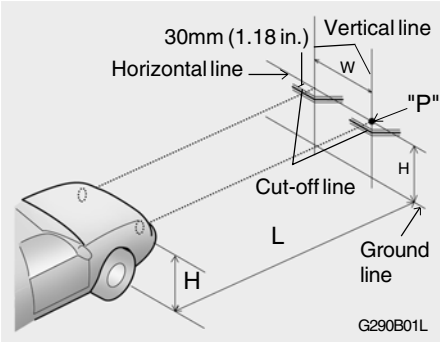

If the vehicle has had front body repair and the headlight assembly has been replaced, the headlight aiming should be checked using the aiming screen as shown in the illustration. Turn on the headlight switch. (Low Beam Position)

1. Adjust headlights so that main axis of light is parallel to center line of the body and is aligned with point "P" shown in the illustration.
2. Dotted lines in the illustration show center of headlights.

Specifications:

"H":
Horizontal center line of headlights from ground

mm(in.)

	MINIBUS	VAN	TRUCK
2WD	894 (35.20)	855 (33.66)	-
4WD	1006 (39.61)	-	-
Long wheel base	-	-	847 (33.35)
Extra long wheel base	-	-	845 (33.27)

"W":
Distance between each headlight center

mm(in.)

	MINIBUS	VAN	TRUCK
2WD	1380 (54.33)		-
4WD			-
Long wheel base	-	-	1272 (50.08)
Extra long wheel base	-	-	

"L":
Distance between the headlights and the wall that the lights are tested against : 3,000 mm (118.11 in.).

REPLACEMENT OF LIGHT BULBS

G260A03A-AAT

Before attempting to replace a headlight bulb, be sure the switch is turned to the "OFF" position.
The next paragraph shows how to reach the headlight bulbs so they may be changed. Be sure to replace the burned-out bulb with one of the same number and wattage rating.
See page 4-38 for the wattage descriptions.

NOTE:

After heavy, driving rain or washing, headlight and taillight lenses could appear frosty. This condition is caused by the temperature difference between the lamp inside and outside. This is similar to the condensation on your windows inside your vehicle during the rain and doesn't indicate a problem with your vehicle. If the water leaks into the lamp bulb circuitry, have the vehicle checked by an Authorized Hyundai Dealer.

CAUTION:
Keep the lamps out of contact with petroleum products, such as oil, gasoline, etc.

G270A01P-GAT

HEADLIGHT AND FRONT TURN SIGNAL LIGHT (Minibus/van)

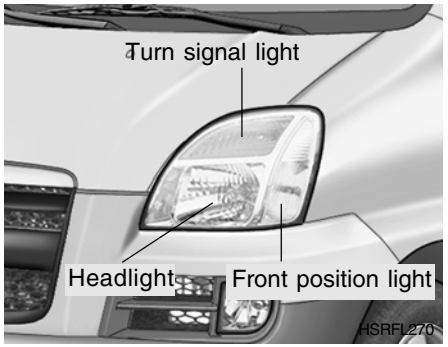

Replacement instructions:

1. Allow the bulb to cool. Wear eye protection.
2. Open the engine hood.
3. Always grasp the bulb by its plastic base, avoid touching the glass.

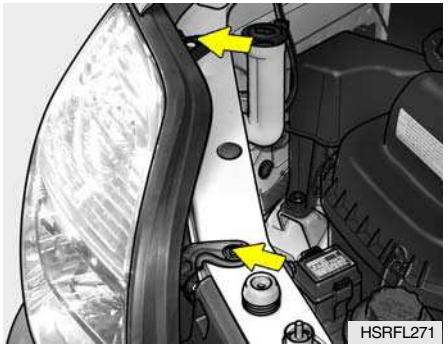

4. Using a spanner of the correct size, remove the headlight assembly mounting bolts.

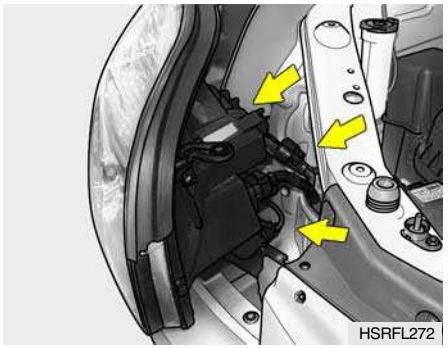

5. Disconnect the power cord from the back of the headlight.

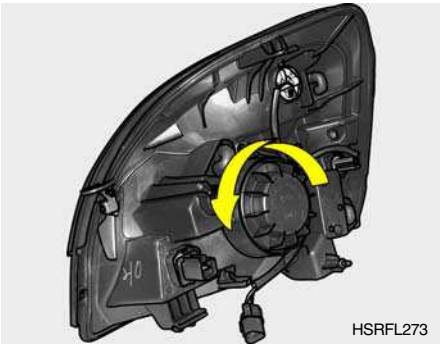

6. Turn the plastic cover counterclockwise and remove it.

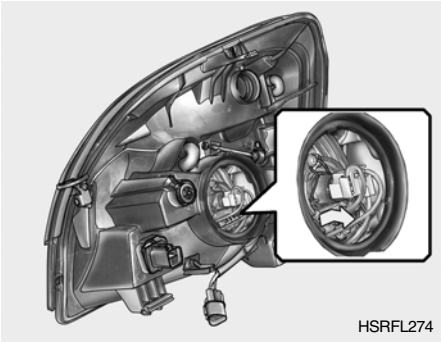

7. Push the bulb spring to remove the headlight bulb.

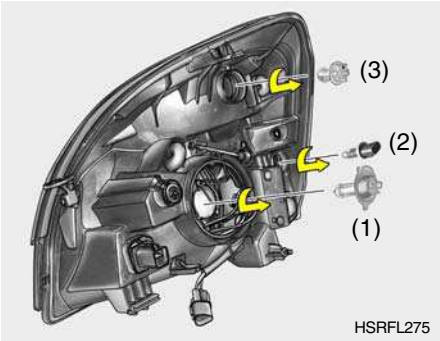

8. Remove the protective cap from the replacement bulb and install the new bulb by matching the plastic base with the headlight hole. Retighten the bulb spring and reconnect the power cord.
9. Use the protective cap and carton to promptly dispose of the old bulb.
10. Check for proper headlight aim.

(1) Headlight
(2) Front position light
(3) Front turn signal light

WARNING:
This halogen bulb contains gas under pressure and if impacted could shatter, resulting in flying fragments. Always wear eye protection when servicing the bulb. Protect the bulb against abrasions or scratches and against liquids when lighted. Turn the bulb on only when installing in a headlight. Replace the headlight if damaged or cracked. Keep the bulb out of the reach of children and dispose of the used bulb with care.

G270B01P-GAT

REAR COMBINATION LIGHT

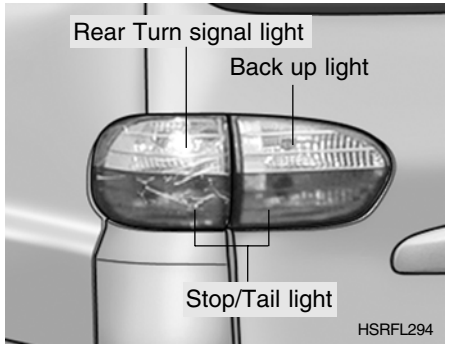

Luggage compartment

1. Open the tail gate.

2. Remove the mounting screws of the rear combination light with a phillips screwdriver.

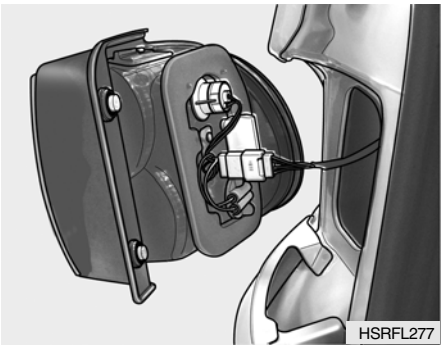

3. Disconnect the power cord from the bulb base in the back of the rear combination light.

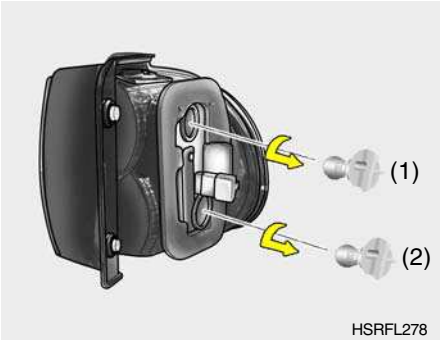

4. To replace the rear combination light, remove it from the bulb holder and install the new bulb.

   (1) Rear turn signal light
   (2) Stop/Tail light

Tail gate

1. Open the tail gate.

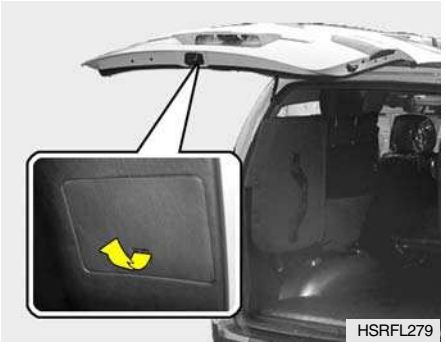

2. Remove the plastic cover with pulling it.

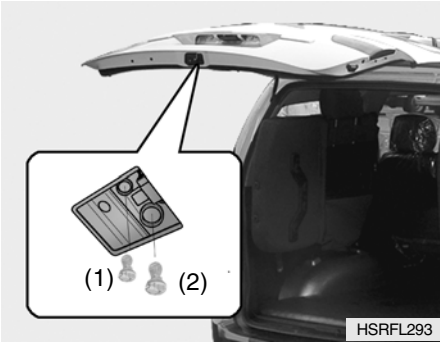

3. To replace the rear combination light, remove it from the bulb holder and install the new bulb.

   (1) Back up light
   (2) Stop/Tail light

G270C01A-GAT

SIDE REPEATER (If installed)

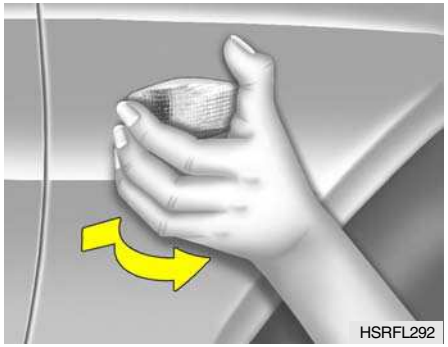

1. Push the cover toward the front of the vehicle and remove it.

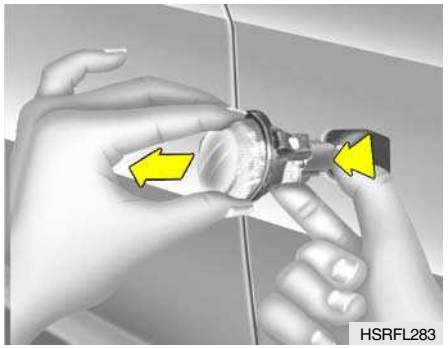

2. Disconnect the power cord.

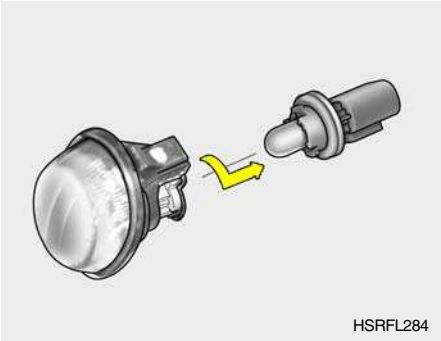

3. Replace with a new bulb.

G270D01P-GAT

INTERIOR LIGHT
Map light

With sunroof

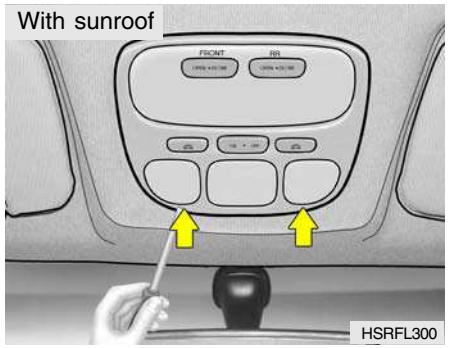

Without sunroof

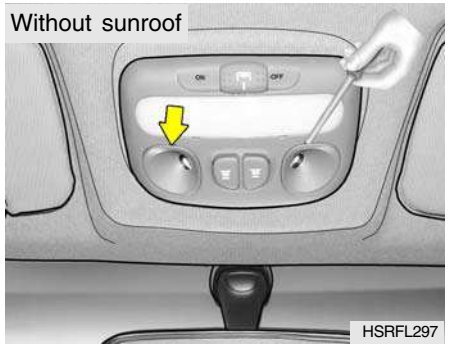

1. Remove the plastic cover with a flat-head screwdriver.

With sunroof

Without sunroof

2. Replace with a new bulb.

Front Room light

With sunroof

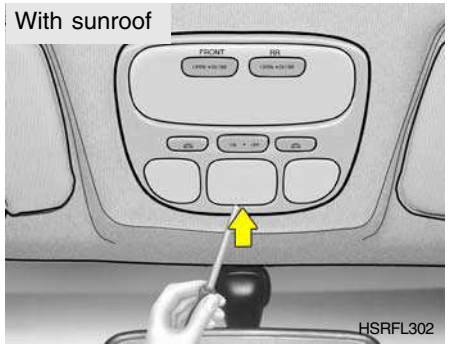

Without sunroof

1. Remove the plastic cover with a flat-head screwdriver.

With sunroof

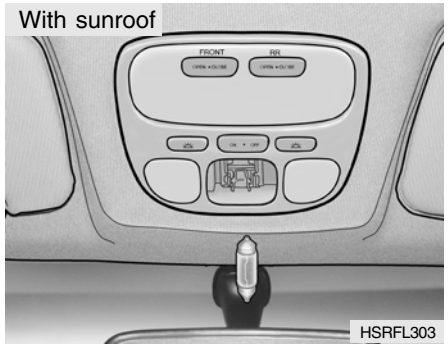

Without sunroof

2. Replace with a new bulb.

Rear Room light

HSRFL285

1. Remove the plastic cover with a flat-head screwdriver.

HSRFL286

2. Remove the mounting screws of the room light holder with phillips screw-driver.

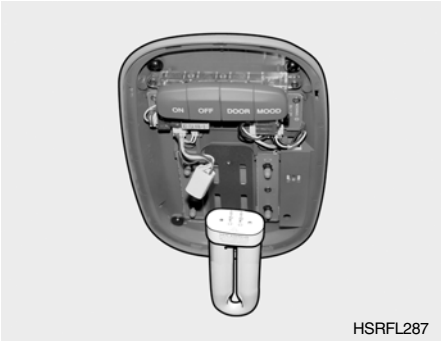

HSRFL287

3. Disconnect the power cord.
4. Replace with a new bulb.

G270E01P-GAT

STEP LIGHT

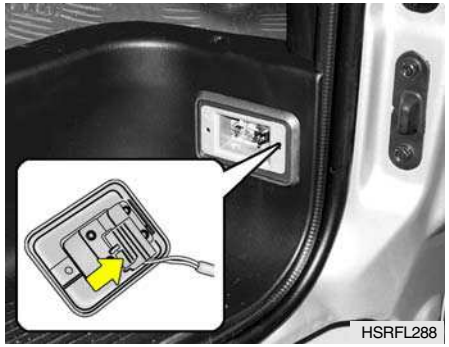
HSRFL288

1. Remove the mounting screws with phillips screwdriver, and then disconnect the power cord.

HSRFL289

2. Replace with a new bulb.

E130F01P-GAT

LICENCE-PLATE LIGHT

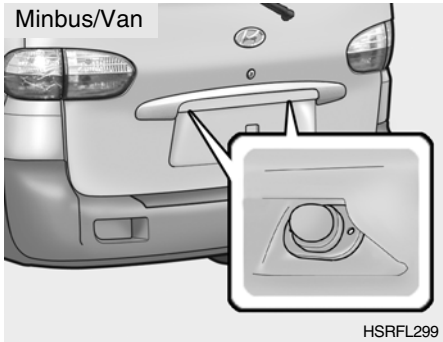

Remove the mounting screws and lens, and then remove the bulb by turning it counterclockwise while pressing it inward.

BULB WATTAGE

G280A02P-GAT

MINIBUS/VAN

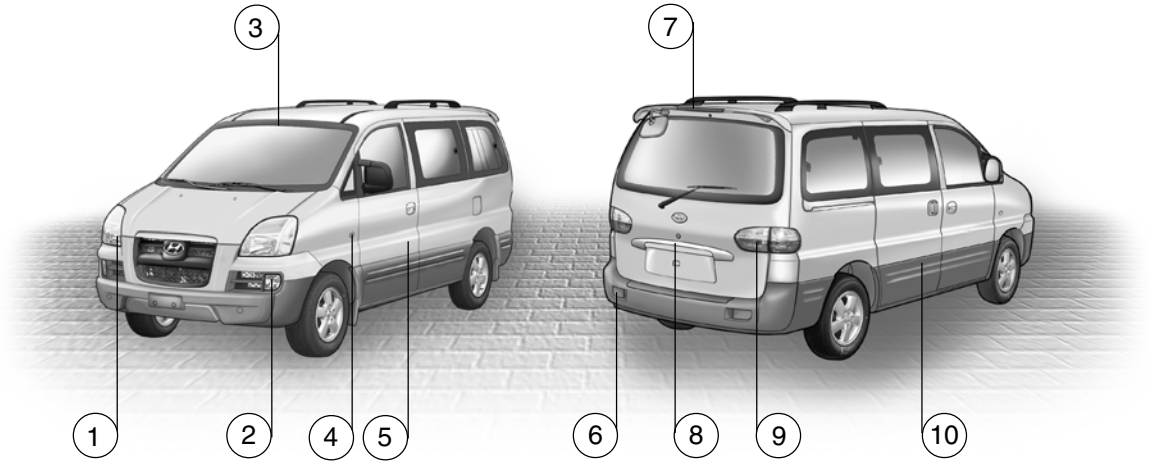

G280A01P

NO.	Part Name			Wattage	Socket type	NO.	Part Name		Wattage	Socket type
1	Headlight	High/Low		60/55	P43t	6	Rear fog light		21	BA15s
		Turn signal light		21	BA15s	7	High mounted stop light		16/21	W-2/BA15s
		Position light		5	W2.1d x 9.5d	8	License plate light		5	W2.1 x 9.5D
2	Front fog light			55	PK22s	9	Rear com bination light	Stop/tail light	21/5(O/SLAMP) 5(I/SLAMP)	BAY15d
3	Interior	Map light		8	S8.5/8.5					
		Room light	Front	10	S8.5/8.5			Turn signal light	21	BA15s
			Rear (Glow type/Fluorescent type)	10	S8.5/8.5			Back up light	16	W2.1 x 9.5D
4	Side repeater			5	W2.1d x 9.5D	10	Step light		5	S8.5/8.5
5	Door edge warning light			5	W2.1d x 4.6D					

G280B02P-GAT

TRUCK

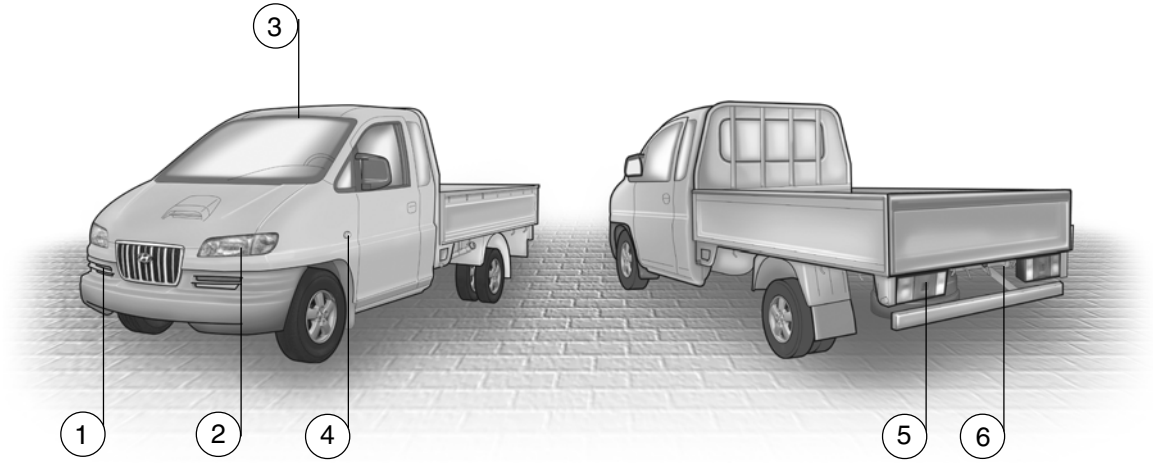

G280B01P

NO.	Part Name		Wattage	Socket Type	NO.	Part Name		Wattage	Socket Type
1	Front fog light		55	PK22s	4	Side repeater		5	W2.1 x 9.5D
2	Headlight	High/Low	60/55 (H4)/55 (H1)	PT3t/ P14.5S	5	Rear combination light	Stop/tail light	21/5	BAY15d
		Turn signal light	21	BA 15s			Turn signal light	21	BA15s
		Position light	5	W2.1d x 9.5d			Back up light	21	BA15s
3	Interior	Map light	8	S8.5/8.5	6	License plate light		5	W2.1 x 9.5D
		Room light	10	S8.5/8.5					

G200B01P-GAT

MINIBUS/VAN
Engine Compartment (Diesel Engine)

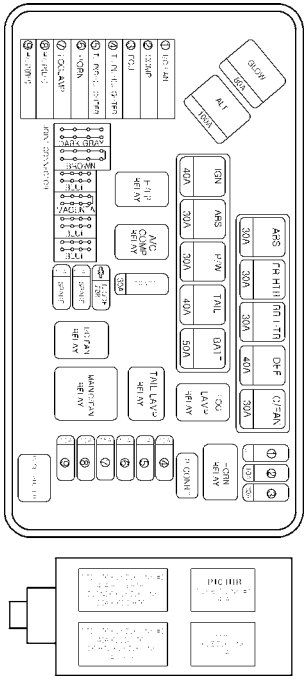

G200A01P

DESCRIPTION		AMPE-RAGES	CIRCUIT PROTECTED
FUSIBLE LINK	ALT	120A	Generator
	GLOW	80A	Glow relay, Glow control module (D4BB)
	ABS	30A	ABS control module
	FR HTR	30A	Blower relay
	RR HTR	30A	Rear blower relay
	DEF.	40A	Fuse 16, 25, 26
	C/FAN	30A	Condenser fan main relay, Condenser fan relay (LOW)
	IGN	40A	Ignition switch, Generator, Start relay, COMP. Fuse, I/C FAN Fuse, ECU Fuse.
	ABS	30A	ABS control module
	P/W	30A	Power window relay, Siren relay
	TAIL	40A	Tail lamp relay, Head lamp relay
	BATT	50A	Front fog lamp relay, Horn relay, Power connector
FUSE	I/C FAN/FR HTD	15A/20A	Inter cooler fan relay, Air temperature switch/Windshield glass defogger
	COMP.	10A	A/C compressor relay
	ECU	30A	Main power relay (D4CB), Engine control relay, Fuel pump relay(Gasoline)
	T/LP(LH)	10A	Illuminations, Left rear combination lamp, Left license lamp
	T/LP(LH)	10A	Illuminations, Right rear combination lamp, Right license lamp
	HORN	10A	Left/Right horn
	FOG	15A	Front fog lamp switch, Left /Right front fog lamp
	H/LP(LH)	10A	Left head lamp
	H/LP(RH)	10A	Right head lamp, Instrument cluster
POWER CONNECTOR		15A	Hazard relay, Fuse 23, 24

NOTE:
Not all fuse panel descriptions in this manual may be applicable to your vehicle. It is accurate at the time of printing. When you inspect the fuse box on your vehicle, refer to the fuse box label.

G200C01P-GAT

(Gasoline Engine)

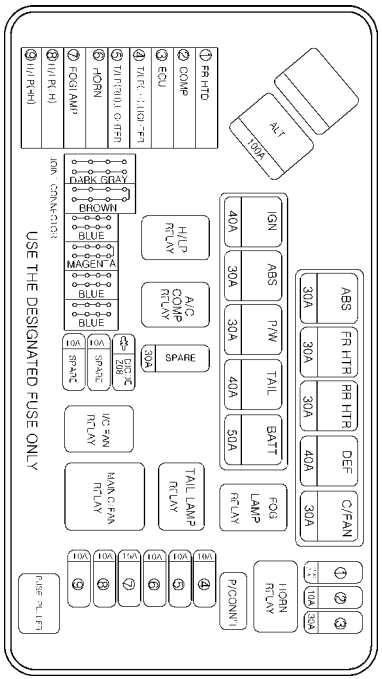

G200B01P

DESCRIPTION		AMPE-RAGES	CIRCUIT PROTECTED
FUSIBLE LINK	ALT	120A	Generator
	ABS	30A	ABS control module
	FR HTR	30A	Blower relay
	RR HTR	30A	Rear blower relay
	DEF.	40A	Fuse 16, 25, 26
	C/FAN	30A	Condenser fan main relay, Condenser fan relay (LOW)
	IGN	40A	Ignition switch, Generator, Start relay, COMP. Fuse,FR HTD Fuse, ECU Fuse.
	ABS	30A	ABS control module
	P/W	30A	Power window relay, Siren relay
	TAIL	40A	Tail lamp relay, Head lamp relay
	BATT	50A	Front fog lamp relay, Horn relay, Power connector
FUSE	I/C FAN/FR HTD	15A/20A	Inter cooler fan relay, Air temperature switch/Windshield glass defogger
	COMP.	10A	A/C compressor relay
	ECU	30A	Main power relay (D4CB), Engine control relay, Fuel pump relay(Gasoline)
	T/LP(LH)	10A	Illuminations, Left rear combination lamp, Left license lamp
	T/LP(LH)	10A	Illuminations, Right rear combination lamp, Right license lamp
	HORN	10A	Left/Right horn
	FOG	15A	Front fog lamp switch, Left /Right front fog lamp
	H/LP(LH)	10A	Left head lamp
	H/LP(RH)	10A	Right head lamp, Instrument cluster
POWER CONNECTOR		15A	Hazard relay, Fuse 23, 24

G200D01P-GAT

Inner Panel

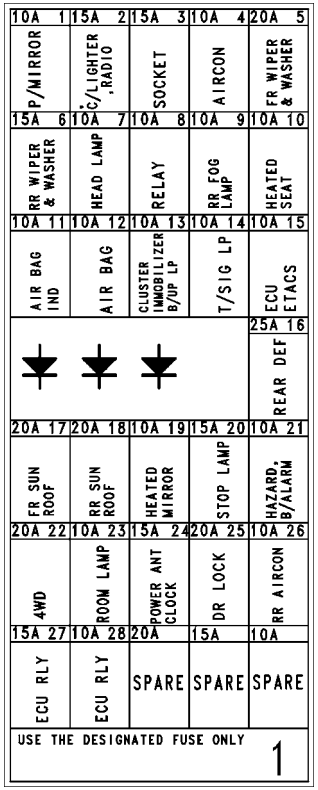

G200D01P

FUSE	AMPERAGES	CIRCUIT PROTECTED
1	10A	Power outside mirror switch
2	15A	Audio, Digital clock, Cigarette lighter, Multi-meter, A/T shift & key lock control module
3	15A	Power outlet
4	10A	Heater control module, Mode actuator
5	20A	Front wiper & Washer
6	15A	Rear wiper & Washer
7	10A	Left front/rear sunroof relay, PTC heater relay, Fuel filter heater relay, Thermo sensor, Hear lamp relay, Condenser fan main relay, HLLD switch, Inter cooler fan relay
8	10A	ETACM, Power & hold switch, Front wiper relay, Seat belt tension reducer, Blower relay, Overhead blower relay, Outside mirror defogger relay, Rear window defogger relay, Rear blower relay, Rear blower main switch, Rear blower sub switch
9	10A	Rear fog lamp relay
10	10A	Seat warmer switch
11	10A	Instrument cluster
12	10A	SRS control module
13	10A	ABS control module, Neutral switch, Back-up lamp switch, Vehicle speed sensor, Fuel water sensor, Fuel filter switch, Fuel filter heater, Transaxle range switch, Instrument cluster, TCM, Stop lamp switch, A/T shift & Key lock control module, G-Sensor, Overdrive switch, A/T shift lever
14	10A	Hazard switch
15	10A	ETACM, ECM (D4BH), ECM (D4CB), Immobilizer control module, Idle-up control module
16	25A	Rear window defogger relay
17	20A	Left front sunroof relay
18	20A	Left rear sunroof relay
19	10A	Data link connector, Heater control module, Outside mirror defogger relay
20	15A	Stop lamp switch

FUSE	AMPERAGES	CIRCUIT PROTECTED
21	10A	Digital clock, Hazard switch, A/T key solenoid, A/T shift lever
22	20A	TCCM
23	10A	Hazard relay, Multipurpose check connector, Front door lamp, ETACM, Step lamp, Instrument cluster, Room lamp switch, TCM, Room lamp, Ignition key ILL & Door warning switch
24	15A	Back warning buzzer, Immobilizer control module, Audio, Power antenna
25	20A	Door lock relay, Door unlock relay
26	10A	Overhead blower relay
27	15A	Condenser fan relay (D4CB), Inter cooler fan relay (D4CB), Glow relay (D4CB), Stop lamp switch, Throttle flap solenoid, EGR solenoid valve
28	10A	ECM (D4CB), Immobilizer control module (D4CB)
-	20A/15A/10A	SPARE

G200E01P-GAT

TRUCK
Engine Compartment

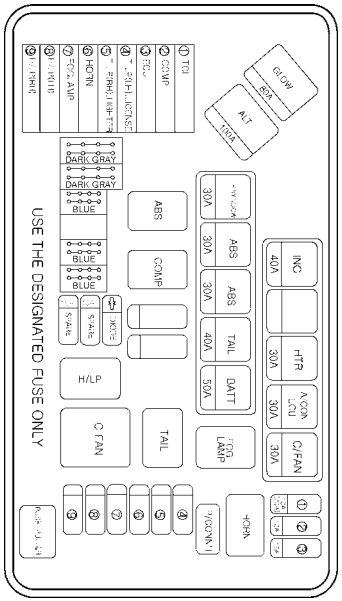

G200E01P

DESCRIPTION	LABEL	AMPERAGES	CIRCUIT PROTECTED
FUSIBLE LINK	ALT	100	Generator
	GLOW	80	Glow control
	HTR	30	Blower control
	P/WINDOW	30	Power window control
	BATT	50	Fog lamp, Horn, Power connector, Fuse 13, 14, 15
	IGN	40	Ignition switch, Start relay, Generator
	TAIL	40	Tail lamp relay, Head lamp fuse
	A/C	30	TCI fuse, Compressor fuse
	C/FAN	30	Condenser fan
	ABS.1	30	ABS control module
	ABS.2	30	ABS control module
FUSE	TCI	10	Idle up fan motor relay
	COMP	10	A/C compressor relay
	ECU	15	Engine control relay
	TAIL (LH)	10	Left tail lamp, Illumination
	TAIL (RH)	10	Right tail lamp, Illumination
	HORN	10	Horn
	FOG	15	Fog lamp
	H/LP (LH)	10	Left head lamp
	H/LP (RH)	10	Right head lamp
POWER CONNECTOR		20	Fuse 23, 24

NOTE:
Not all fuse panel descriptions in this manual may be applicable to your vehicle. It is accurate at the time of printing. When you inspect the fuse box on your vehicle, refer to the fuse box label.

G200F01P-GAT

Passenger Compartment

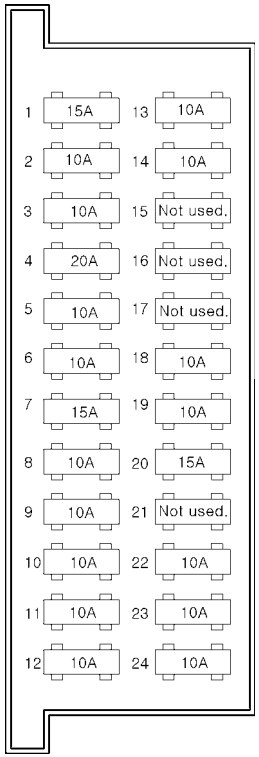

G200F01P

FUSE	AMPERAGES	CIRCUIT PROTECTED
1	15A	Power outside mirror switch, Cigarette lighter, Digital clock
2	10A	Audio
3	10A	DRL, ABS control module, condenser fan relay
4	20A	Wiper motor, Washer motor
5	10A	Blower relay, Head lamp relay, Power window relay, Defogger relay, Mode actuator, Rear fog relay, Head lamp leveling switch, Heater control panel, Left (Right) head lamp leveling actuator
6	10A	ECM, Neutral switch, Injection pump, Engine control relay, Intercooler fan relay, EGR solenoid valve, SRS control module
7	15A	SRS control module
8	10A	Back-up lamp switch, Vehicle speed sensor, ABS relay, Instrument cluster, Pre-excitation resistor
9	10A	Hazard switch
10	10A	TACM
11	10A	Instrument cluster
12	10A	A/C switch
13	10A	Stop lamp switch
14	10A	Hazard switch
15	-	Not used.
16	-	Not used.
17	-	Not used.
18	10A	Defogger relay
19	10A	Rear fog lamp relay
20	15A	Left power door lock actuator
21	-	Not used.
22	10A	ECM, Start relay
23	10A	Digital clock, Tachograph, Power antenna, Audio
24	10A	Instrument cluster, Front (Rear) room lamp, TACM, Door warning switch & Key ill.

APPEARANCE CARE

Washing/Waxing/Polishing 5-2
Window Glass 5-3
Chassis and Underbody Protection 5-3
Engine Compartment 5-4
Tire 5-5

5

APPEARANCE CARE

F010A01P-GAT

In order to maintain the value of your vehicle, it is necessary to perform regular maintenance using the proper procedure. Be sure to maintain your vehicle in compliance with any pertinent environmental pollution control regulations.
Carefully select the materials to be used for washing, etc., to be sure that they do not contain corrosives; if in doubt, contact an authorized HYUNDAI dealer for assistance in the selection of these materials.

F010B01P-GAT

Washing

Chemicals contained in the dirt and dust picked up from the road surface can damage the paint coat and body of your vehicle if left in prolonged contact.
Frequent washing is the best way to protect your vehicle from this damage. This will also be effective in protecting it from environmental elements such as rain, snow, salt air, etc.

Do not wash the vehicle in direct sunlight.
Park the vehicle in the shade and spray it with water to remove dust. Next, using an ample amount of clean water and a vehicle washing brush or sponge, wash the vehicle from top to bottom.
Use a mild vehicle washing soap if necessary. Rinse thoroughly and wipe dry with a soft cloth. After washing the vehicle (including washing in an automatic vehicle wash), carefully clean the joints and flanges of the doors, hood, etc., where dirt is likely to remain.

F010C01P-GAT

Waxing

Waxing the vehicle will help prevent the adherence of dust and road chemicals to the paintwork. Apply a wax solution after washing the vehicle, and apply wax at least once every three months.

F010D01P-GAT

Polishing

The vehicles should only be polished if the paintwork has become stained or lost its luster. Mat-finish parts and plastic bumpers must not be polished; polishing these parts will stain them or damage their finish.

F010E01P-GAT

Wheels

The wheels are painted and, therefore, require the same care and maintenance as the vehicle body.

F010F01P-GAT

Chrome parts

In order to prevent spots and corrosion of chrome parts, wash with water, dry thoroughly, and apply a special protective coating. This should be done move frequently in the winter.

F010G01P-GAT

Window glass

The window glass can normally be cleaned using only a sponge and water.
Glass cleaner can be used to remove oil, grease, dead insects, etc. After washing the glass, wipe dry with a clean, dry, soft cloth.
Never use the same cloth to wipe the window glass as would be used to wipe the paintwork; wax from the painted surfaces could adhere to the glass and reduce its transparency and visibility.

F010H01P-GAT

Wiper blades

Use a soft cloth and glass cleaner to remove grease, dead insects, etc., from the wiper blades. Replace the wiper blades when they no longer wipe properly.

F010I01P-GAT

Chassis and underbody protection

Your vehicle's underbody has been treated at the factory in order to protect it from rust and corrosion. Some areas have been injected with anti-corrosion agents and wax.
The effectiveness of these measures, however, will be reduced by flying stones, road chemicals, etc., as the vehicle is driven.
Have the underbody checked regularly (autumn and spring) and have additional protection treatment carried out as required. As not all of the commercially available materials are suitable for use on your vehicle, it is recommended that you have this work done at an authorized HYUNDAI dealer.
When washing the vehicle, especially in winter, spray the underbody with water to remove dirt and dust which might contain salts, road chemicals, etc.

F010K01P-GAT

Upholstery and Interior

To maintain the value of your new vehicle, handle the upholstery carefully and keep the interior clean.
Use a vacuum cleaner and brush to clean the seats. If stained, vinyl and synthetic leather should be cleaned with an appropriate cleaner, and cloth fabrics can be cleaned with either upholstery cleaner or a 3% solution of neutral detergent in lukewarm water.
Clean the carpeting with a vacuum cleaner and remove any stains with carpet cleaner.
Oil and grease can be removed by lightly dabbing with a clean colorfast cloth and benzene or spot remover.

F010J01P-GAT
Engine compartment

Clean the engine compartment at the beginning and end of winter. Pay particualr attention to flanges, crevices, and peripheral parts where dust containing road chemicals and other corrosive materials might collect.
If salt and other chemicals are used on the roads in your area, clean the engine compartment at least every three months.

F010L01P-GAT
Damaged paint

Small cracks and scratches in the paint coat should be touched up as soon as possible with HYUNDAI paint pencil or spray paint to prevent corrosion. Check body areas facing the road or the tires especially carefully for damage to the paint coat caused by flying stones, etc. The paint code number for your vehicle can be found on the vehicle information code plate.

F010M01P-GAT
Tar

If tar becomes adhered to the vehicle, use special tar remover to remove it as soon as possible. If the tar leaves a stain, polish the affected area.

F010N01P-GAT
Plastic and rubber parts

Use a soft cloth and wash with water. If necessary, a cleaning agent specially designed for plastics can be used. If engine oil, brake fluid, battery fluid, etc., comes in contact with these parts, wash promptly with water and then use alcohol to remove the stain completely.

F010O01P-GAT
Load weight and driving speed

Remove any luggage, etc., which is not necessary from the vehicle. The load weight placed on the roof or towed in a trailer also should not be excessive.
Correctly adjusting the air pressure of the tires before driving under maximum load weight conditions and before driving long distances is especially important.

F010Q01P-GAT
Kerb parking

If the tires strike a kerb or concrete parking barrier, they could be damaged, and this damage could become a source of extreme danger when the vehicle is subsequently driven at high speed. If the vehicle is to be driven or onto a kerb or any other such barrier, it should be driven slowly and at an appropriate angle to the kerb or barrier.

F010P01P-GAT
Tire replacement

Tires which do not meet the size specifications must not be used. Replacement of the tires must be made as a set of the two front tires, the two rear tires, or all four tires.
A mixture of bias-ply tires and radial tires must not be used. Consult an authorized HYUNDAI dealer regarding tire replacement.

F010R01P-GAT
Tire care

For driving safely, and in order to obtain the maximum useful life of the tires, the following points should be observed. For information concerning inspection, air pressure, and rotation of the tires, refer to the part which deals with wheels in the section of this manual entitled "Consumer Information".

F010S01P-GAT
Tire air pressure

The air pressure of the tires must always be maintained in accordance with the specifications, and should be measured when the tires are cool.
If any changes in driving conditions (speed and/or load weight) occur, the air pressure of the tires must meet the specifications which apply to the new driving conditions. If the vehicle is going to be driven under varying load weight, etc., the air pressure must be adjusted in order to meet the highest specifications of the conditions under which the vehicle is driven (high speeds and maximum load weight).

F010T01P-GAT
Tire storage

Storage of the tires should be in a dark, well-ventilated place.
Tires not mounted on rims should be stored vertically. Be sure that the tires are not in contact with fuel, oil grease, etc.

VEHICLE MAINTENANCE REQUIREMENTS

Maintenance Intervals 6-2
Scheduled Maintenance 6-4
Maintenance Under Severe Usage Conditions 6-11
Explanation of Scheduled Maintenance Items 6-12

6

F010A01A-GAT
Service Requirements

To assure that you receive the greatest number of kilometers of satisfying operation from your Hyundai, certain maintenance procedures must be performed. Although careful design and engineering have reduced these to a minimum, those that are required are of the utmost importance.
It is your responsibility to have these maintenance procedures performed to comply with the terms of the warranties covering your new Hyundai. The Service Passport supplied with your new vehicle provides further information about these warranties.

F010B01A-AAT
Maintenance Requirements

The maintenance required for your Hyundai can be divided into three main areas:

- o Specified scheduled procedures
- o General checks
- o Do-it-yourself maintenance

F010C01A-GAT
Specified Scheduled Procedures

These are the procedures such as inspections, adjustments and replacements that are listed in the maintenance charts starting on page 6-4. These procedures must be performed at the intervals shown in the maintenance schedule to assure that your warranty remains in effect. Although it is strongly recommended that they be performed by the factory-trained or distributor-trained technicians at your Hyundai dealer, these procedures may be performed at any qualified service facility.

It is suggested that genuine Hyundai service parts be used for any required repairs or replacements. Other parts of equivalent quality such as engine oil, engine coolant, manual or auto transaxle oil, brake fluid and so on which are not supplied by Hyundai Motor Company or its distributor may be used without affecting your warranty coverage but you should always be sure these are equivalent to the quality of the original Hyundai parts. Your Service Passport provides further information about your warranty coverage.

F010D01P-AAT
General Checks

These are the regular checks you should perform when you drive your Hyundai or you fill the fuel tank. A list of these items will be found on page 8-6.

F010E01P-AAT

Do-It-Yourself Maintenance

If you are mechanically inclined, own a few tools that are required and want to take the time to do so, you can inspect and service a number of items. For more information about doing it yourself, see Section 8.

F010F01A-GAT

A Few Tips

Whenever you have your Hyundai serviced, keep copies of the service records in your glovebox. This will help ensure that you can document that the required procedures have been performed to keep your warranties in effect. This is especially important when service is not performed by an authorized Hyundai dealer.

SCHEDULED MAINTENANCE REQUIREMENTS

F020A03S-GAT

Inspection should be performed any time a malfunction is experienced or suspected. Receipts for all emission control system services should be retained to demonstrate compliance with conditions of the emissions system warranty.
For severe usage maintenance requirements, see page 6-11 of this section.

G010A02P-GAT

EXCEPT EUROPEAN COMMUNITY

The following maintenance services must be performed to assure good vehicle control and performance. Keep receipts for all vehicle services to protect your warranty. Where both kilometers and time are shown, the frequency of service is determined by whichever occurs first.

R : Replace I : Inspect and, after inspection, clean, adjust, repair or replace if necessary

NO.	DESCRIPTION	KILOMETERS X 1000	5	10	20	30	40	50	60	70	80	90
		MONTHS	4	8	16	24	32	40	48	56	64	72
	ENGINE CONTROL SYSTEM MAINTENANCE (GASOLINE)											
1	ENGINE OIL AND FILTER		See Note (1)									
2	AIR CLEANER FILTER			I	I	R	I	I	R	I	I	R
3	FUEL FILTER					R			R			R
4	FUEL SYSTEM LEAKS			I	I	I	I	I	I	I	I	I
5	SPARK PLUGS	Unleaded	See Note (2)									
		Leaded	See Note (3)									
6	VACUUM CRANKCASE VENTILATION HOSE				I		I		I		I	
7	TIMING BELT								I			R
8	DRIVE BELT (FOR WATER PUMP AND ALTERNATOR)			I	I	I	I	I	I	I	I	I

Note: (1) For every 15,000 KM or 12 months, whichever occurs first "R"
(2) For every 100,000 KM : "R"
(3) For every 40,000 KM : "R"

G020A04P-GAT

R : Replace I : Inspect and, after inspection, clean, adjust, repair or replace if necessary

NO.	DESCRIPTION	KILOMETERS X 1000	5	10	20	30	40	50	60	70	80	90
		MONTHS	4	8	16	24	32	40	48	56	64	72
	ENGINE CONTROL SYSTEM MAINTENANCE (DIESEL)											
1	ENGINE OIL AND FILTER		See Note(1)									
2	AIR CLEANER FILTER			I	I	R	I	I	R	I	I	R
3	FUEL FILTER					R			R			R
4	VALVE CLEARANCE				I		I		I		I	
5	INJECTION TIMING (IF EXHAUST GAS INCLUDES BLACK SMOKE)					I			I			I
6	EGR SYSTEM (VALVE, TUBE, HOSE)					I			I			I
7	TIMING BELT						I				R	
8	DRIVE BELT (FOR WATER PUMP AND ALTERNATOR)			I	I	I	I	I	I	I	I	I
9	ENGINE IDLE SPEED				I		I		I		I	
10	FUEL SYSTEM LEAKS		I	I	I	I	I	I	I	I	I	I
11	INJECTION NOZZLE (IF EXHAUST GAS INCLUDES BLACK SMOKE)					I			I			I
12	VACUUM PUMP (WITH ALTERNATOR)				I		I		I		I	

Note : (1) For every 5,000 KM or 6 months, whichever occurs first : "R"

Republic of South Africa (If the vehicle is lubricated API CH-4 grade or above.)
For every 7,500 KM or 6 months, whichever occurs first : "R"

G020A06P-GAT

R : Replace I : Inspect and, after inspection, clean, adjust, repair or replace if necessary

NO.	DESCRIPTION	KILOMETERS X 1000	5	10	20	30	40	50	60	70	80	90
		MONTHS	4	8	16	24	32	40	48	56	64	72
	GENERAL MAINTENANCE											
1	ENGINE COOLANT		See Note (1)									
2	MANUAL TRANSMISSION OIL			I	I	I	I	I	I	I	I	I
3	AUTOMATIC TRANSMISSION OIL		See Note (2)									
4	TRANSFER CASE OIL		See Note (3)									
5	REAR AXLE OIL			I	I	I	R	I	I	I	R	I
6	CLUTCH / BRAKE PEDAL FREE PLAY			I	I	I	I	I	I	I	I	I
7	CLUTCH / BRAKE OIL RESERVOIR			I	I	I	I	I	I	I	I	I
8	BRAKE HYDRAULIC FLUID			I	I	I	I	I	I	I	I	I
9	FRONT BRAKE PADS			I	I	I	I	I	I	I	I	I
10	FRONT BRAKE CALIPERS / CYLINDERS / DISC				I		I		I		I	
11	REAR BRAKE DRUMS / LININGS / CYLINDERS				I		I		I		I	
12	HANDBRAKE			I	I	I	I	I	I	I	I	I
13	TIRE CONDITION / PRESSURE			I	I	I	I	I	I	I	I	I
14	EXHAUST SYSTEM / MOUNTING			I	I	I	I	I	I	I	I	I
15	STEERING JOINT / RACK / BOX OIL LEAKS			I	I	I	I	I	I	I	I	I
16	SUSPENSION JOINT / SEALS				I		I		I		I	
17	FRONT WHEEL BEARING				I		I		I		I	
18	ENGINE COOLANT HOSES			I	I	I	I	I	I	I	I	I
19	BRAKE PIPE CORROSION			I	I	I	I	I	I	I	I	I
20	SEATBELTS / MOUNTINGS					I			I			I
21	HEAD LAMPS				I		I		I		I	
22	CLIMATE CONTROL AIR FILTER (FOR EVAPORATOR AND BLOWER UNIT)		See Note (4)									

Note : (1) For every 40,000 KM or 24 months, whichever occurs first : "R"
(2) For every 20,000 KM or 12 months, whichever occurs first : "I"
(3) For every 48,000 KM or 24 months, whichever occurs first : "R"
(4) For every 15,000 KM or 12 months, whichever occurs first : "R"

G040A05P-GAT

FOR EUROPEAN COMMUNITY ONLY

The following maintenance services must be performed to assure good vehicle control and performance. Keep receipts for all vehicle services to protect your warranty. Where both kilometers and time are shown, the frequency of service is determined by whichever occurs first.

R : Replace I : Inspect and, after inspection, clean, adjust, repair or replace if necessary

NO.	DESCRIPTION	KILOMETERS X 1000	7.5	15	30	45	60	75	90
		MONTHS	6	12	24	36	48	60	72
	ENGINE CONTROL SYSTEM MAINTENANCE (GASOLINE)								
1	ENGINE OIL AND FILTER			R	R	R	R	R	R
2	AIR CLEANER FILTER			I	R	I	R	I	R
3	FUEL FILTER					R			R
4	FUEL FILTER CARTRIDGE See Note (1)				R		R		R
5	FUEL SYSTEM LEAKS				I		I		I
6	SPARK PLUG		See Note (2)						
7	TIMING BELT						I		R
8	DRIVE BELT (FOR WATER PUMP/ALTERNATOR)			I	I	I	I	I	I

Note : (1) If the diesel fuel specifications don't meet the european standards EN590, replace it more frequently. Consult an authorized hyundai dealer for details.
(2) For every 100,000 KM : "R"

G050A05P-GAT

R : Replace I : Inspect and, after inspection, clean, adjust, repair or replace if necessary

NO.	DESCRIPTION	KILOMETERS X 1000	7.5	15	30	45	60	75	90
		MONTHS	6	12	24	36	48	60	72
	ENGINE CONTROL SYSTEM MAINTENANCE (EXCEPT 2.5 CRDi DIESEL)								
1	ENGINE OIL AND FILTER		See Note (1)						
2	AIR CLEANER FILTER			I	R	I	R	I	R
3	FUEL SYSTEM LEAKS				I		I		I
4	FUEL FILTER				R		R		R
5	VALVE CLEARANCE		See Note (2)						
6	EGR SYSTEM (VALVE, TUBE, HOSE)				I		I		I
7	INJECTION TIMING (IF EXHAUST GAS INCLUDES BLACK SMOKE)				I		I		I
8	TIMING BELT						I		R
9	DRIVE BELT (FOR WATER PUMP/ALTERNATOR)			I	I	I	I	I	I
10	ENGINE IDLE SPEED			I	I	I	I	I	I
11	INJECTION NOZZLE (IF EXHAUST GAS INCLUDES BLACK SMOKE)				I		I		I
12	VACCUM PUMP (WITH ALTERNATOR)		See Note (3)						

Note : (1) For every 7,500 KM or 6 months, whichever occurs first : "R"
(2) For every 20,000 KM : "I"
(3) For every 20,000 KM or 16 months, whichever occurs first : "I"

G080A03P-GAT

R : Replace I : Inspect and, after inspection, clean, adjust, repair or replace if necessary

NO.	DESCRIPTION	KILOMETERS X 1000	15	30	45	60	75	90
		MONTHS	12	24	36	48	60	72
	ENGINE CONTROL SYSTEM MAINTENANCE (2.5 CRDi DIESEL ONLY)							
1	ENGINE OIL AND FILTER		R	R	R	R	R	R
2	AIR CLEANER FILTER		I	R	I	R	I	R
3	FUEL SYSTEM LEAKS			I		I		I
4	FUEL FILTER			R		R		R
5	DRIVE BELT (FOR WATER PUMP AND SALTERNATOR)		I	I	I	R	I	I
6	INJECTION NOZZLE (IF EXHAUST GAS INCLUDES BLACK SMOKE)			I		I		I
7	VACCUM PUMP		See Note (1)					

Note : (1) For every 20,000 KM or 16 months, whichever occurs first : "I"

G060A05P-GAT

R : Replace I : Inspect and, after inspection, clean, adjust, repair or replace if necessary

NO.	DESCRIPTION	KILOMETERS X 1000	7.5	15	30	45	60	75	90
		MONTHS	6	12	24	36	48	60	72
	GENERAL MAINTENANCE								
1	ENGINE COOLANT		See Note (1)						
2	MANUAL TRANSMISSION OIL			I	I	I	I	I	I
3	AUTOMATIC TRANSMISSION OIL			I	I	I	I	I	R
4	TRANSFER CASE OIL		See Note (2)						
5	REAR AXLE OIL			I	I	R	I	I	R
6	CLUTCH/BRAKE PEDAL FREEPLAY			I	I	I	I	I	I
7	CLUTCH/BRAKE OIL RESERVOIR			I	I	I	I	I	I
8	BRAKE HYDRAULIC FLUID				I		I		I
9	FRONT BRAKE PAD			I	I	I	I	I	I
10	FRONT BRAKE CALIPERS/CYLINDERS/DISC				I		I		I
11	REAR BRAKE DRUMS/LININGS/CYLINDERS				I		I		I
12	HAND BRAKE			I	I	I	I	I	I
13	TIRE CONDITION/PRESSURE			I	I	I	I	I	I
14	EXHAUST SYSTEM/MOUNTING				I		I		I
15	STEERING JOINT/RACK/BOX/OIL LEAKS				I		I		I
16	SUSPENSION JOINT/SEALS				I		I		I
17	FRONT WHEEL BEARING				I		I		I
18	ENGINE COOLANT HOSES				I		I		I
19	BRAKE PIPE CORROSION			I	I	I	I	I	I
20	CLIMATE CONTROL AIR FILTER (FOR EVAPOERATOR AND BLOWER UNIT)			R	R	R	R	R	R

Note: (1) For every 45,000 KM or 24 months, whichever occurs first : "R"
(2) For every 48,000 KM or 24 months, whichever occurs first : "R"

MAINTENANCE UNDER SEVERE USAGE CONDITIONS

G070A08P-GAT

The following items must be serviced more frequently on cars normally used under severe driving conditions. Refer to the chart below for the appropriate maintenance intervals.

R : Replace I : Inspect and, after inspection, clean, adjust, repair or replace if necessary

MAINTENANCE ITEM		MAINTENANCE OPERATION	MAINTENANCE INTERVALS			DRIVING CONDITION
ENGINE OIL AND FILTER		R	GASOLINE		Every 7,500 KM or 6 months	A, B, C, D, E, F, G, H, I, K
			DIESEL	Except E.C	Every 3,000 KM	A, B, C, F, H, J
				For E.C	Every 4,000 KM (Except 2.5 CRDi)	
					Every 7,500 KM or 6 months (2.5 CRDi only)	
AIR CLEANER FILTER		R	More Frequently			C, E
SPARK PLUGS		R	More Frequently			B, H
TIMING BELT		R	Every 60,000 KM or 48 months			D, E, F, G
BRAKE PADS, CALIPERS, ROTORS		I	More Frequently			C, D, G, H
REAR BRAKE DRUMS AND LININGS		I	More Frequently			C, D, G, H
STEERING GEAR BOX, LINKAGE & BOOTS		I	Every 10,000 KM or 6 months			C, D, E, F
CLIMATE CONTROL AIR FILTER (FOR EVAPORATOR AND BLOWER UNIT)		R	More Frequently			C,E
MANUAL TRANSMISSION OIL		R	Every 100,000 KM			A, C, D, E, F, G, H, I, J
AUTOMATIC TRANSMISSION OIL	Except E.C	R	Every 40,000 KM			A, C, E, F, G, H, I
	For E.C		Every 45,000 KM			

SEVERE DRIVING CONDITIONS

A - Repeated short distance driving
B - Extensive idling
C - Driving in dusty conditions
D - Driving in areas using salt or other corrosive materials or in very cold weather
E - Driving in sandy areas
F - More than 50% driving in heavy city traffic during hot above 32°C (90°F)
G - Driving in mountainous areas
H - Towing a trailer or police car, taxi, or commercial type operation
I - Driving for patrol car, taxi, commercial car or vehicle towing
J - Driving over 170 km/h
K - Frequently driving in stop-and-go conditions

F060M01A-AAT

o Engine Oil and Filter

The engine oil and filter should be changed at those intervals specified in the maintenance schedule. If the vehicle is being driven in severe conditions, more frequent oil and filter changes are required.

G080B02P-GAT

o Valve Clearances (Diesel)

An incorrect valve clearance will not only result in rough engine operation, but will also cause excessive noise and reduced engine output.
Inspect valve clearance and adjust as required while the engine is hot.

G080C02P-GAT

o Fuel Lines and Connections

Check the fuel lines and connections for leakage and damage. Replace any damaged or leaking parts immediately.

! WARNING (Diesel only):
Never work on injection system with engine running or within 30 seconds after shutting off engine. High pressure pump, rail, injectors and high pressure pipes are subject to high pressure even after the engine stopped. The fuel jet produced by fuel leaks may cause serious injury, if it touch the body. People using pacemakers should not move than 30cm closer to the ECU or wiring harness within the engine room while engine is running, since the high currents in the Common Rail system produce considerable magnetic fields.

G080D01P-GAT

o Fuel Filter

A clogged filter can limit the speed at which the vehicle may be driven, damage the emission system and cause hard starting. If an excessive amount of foreign matter accumulates in the fuel tank, the filter may require replacement more frequently.
After installing a new filter, run the engine for several minutes, and check for leaks at the connections.

G080E01P-GAT

o Vacuum and Crankcase Ventilation Hoses

Inspect the surface of hoses for evidence of heat and/or mechanical damage. Hard and brittle rubber, cracking, tears, cuts, abrasions, and excessive swelling indicate deterioration. Particular attention should be paid to examining those hose surfaces nearest to high heat sources, such as the exhaust manifold.
Inspect the hose routing to assure that the hoses do not come in contact with any heat source, sharp edges or moving component which might cause heat damage or mechanical wear. Inspect all hose connections, such as clamps and couplings, to make sure they are secure, and that no leaks are present. Hoses should be replaced immediately if there is any evidence of deterioration or damage.

G080F01P-GAT

o Fuel Hose, Vapor Hose and Fuel Filler Cap

The fuel hose, vapor hose and fuel filler cap should be inspected at those intervals specified in the maintenance schedule. Make sure that a new fuel hose, vapor hose or fuel filler cap is correctly replaced. Consult your Hyundai dealer if you have any questions.

G080G01P-GAT

o Air Cleaner Filter

A genuine Hyundai part is recommended for replacement of the air cleaner filter.

G080H01P-GAT

o Spark Plugs (Gasoline)

Make sure to install new spark plugs of the correct heat range.

G080I01P-GAT

o Drive Belts

Inspect all drive belts (water pump and alternator) for evidence of cuts, cracks, excessive wear or oiliness, and replace if necessary. Drive belts should be checked periodically for proper tension and adjusted as necessary.

G080J01P-GAT

o Engine Coolant

The coolant should be changed at those intervals specified in the Vehicle Maintenance Requirements Section.

G080K01P-GAT

o Timing Belt

Inspect all parts related with the timing belt for damage and deformation. Replace any damaged parts.

G080L01P-GAT

o Manual Transmission Oil

Check manual transmission oil according to the maintenance schedule.

NOTE:
If the oil level is low, check for possible leaks before adding oil. Do not overfill.

G080M03P-GAT

o Automatic Transmission Fluid

The fluid level should be in the "HOT" range of the dipstick, after engine and transmission are at normal operating temperature. Check the Automatic Transmission Fluid level with the engine running and the transmission in neutral, with the parking brake properly applied. Use MOBIL DEXRON-II or DIAMOND ATF SP-I when adding or changing fluid.

G080N01P-GAT

o Brake Hoses and Lines

Visually check for proper installation, chafing, cracks, deterioration and any leakage. Replace any deteriorated or damaged parts immediately.

G080O01P-GAT

o Brake Fluid

Check brake fluid level in the brake fluid reservoir. The level should be between "MIN" and "MAX" marks on the side of the reservoir. Use only hydraulic brake fluid conforming SAE J1703.

G080P01P-GAT

o Rear Brake Drums and Linings

Check for scoring, burning, leaking fluid, broken parts, and excessive wear.

G080Q01P-GAT

o Brake Pads, Calipers and Rotors

Check the pads for excessive wear, discs for run out and wear, and calipers for fluid leakage.

G080R01P-GAT

o Parking Brake

Inspect the parking brake system such as parking brake lever, cables, and so on. For detailed service procedures, refer to the Shop Manual.

G080S01P-GAT

o Exhaust Pipe Connections, Muffler and Suspension Bolts

Check the exhaust pipe, muffler, and suspension connections for looseness or damage.

G080T01P-GAT

o Steering Bear Box, Linkage and Boots

With the vehicle stopped and engine off, check for excessive free-play in the steering wheel. Check the linkage for bends or damage. Check the dust boots and ball joints for deterioration, cracks, or damage. Replace any damaged parts.

G080U01P-GAT

o Wheel Bearing Grease

Check the wheel bearings and grease according to the maintenance schedule. For inspection procedures, see Shop Manual.

EMISSION CONTROL SYSTEM

Emission Control System 7-2
Catalytic Converter 7-3

7

7

2 EMISSION CONTROL SYSTEM

H010A01P-GAT

(Gasoline)

Your Hyundai is equipped with an emission control system.
There are three emission control systems which are as follows.

(1) Crankcase emission control system
(2) Evaporative emission control system
(3) Exhaust emission control system

In order to assure the proper function of the emission control systems, it is recommended that you have your vehicle inspected and maintained by an authorized Hyundai dealer in accordance with the maintenance schedule in this manual.

H020A01P-GAT

1. Crankcase Emission Control System

The positive crankcase ventilation system is employed to prevent air pollution caused by blow-by gases being emitted from the crankcase. This system supplies fresh air to the crankcase through the air cleaner. Inside the crankcase, the fresh air mixes with blow-by gases, then passes through the PCV valve into the induction system.

H080A01P-GAT

PCV Valve

The crankcase ventilation system must be kept clean to maintain good engine performance.
Periodic servicing is required to remove combustion products from the PCV valve.

H030A01P-GAT

2. Evaporative Emission Control System (except canister)

The Evaporative Emission Control System is designed to prevent fuel vapors from escaping into the atmosphere.
If the fuel-vapor vent line is clogged or damaged, the fuel-vapor mixture will escape into the atmosphere and cause insufficient emission control.
Disconnect the line at both ends, and blow it clean with compressed air.
Remove the filler cap from the filler pipe, and check to see if there is evidence that the packing contact to the filler pipe is faulty. The overfill limiter (2-way valve) installed on the vapor line between the canister inlet and fuel tank outlet must be checked for correct operation.

H040A01P-GAT

Canister

While the engine is inoperative, fuel vapors generated inside the fuel tank are absorbed and stored in the canister. When the engine is running, the fuel vapors absorbed in the canister are drawn into the induction system through the purge control solenoid valve.

H090A01P-GAT

Purge Control Solenoid Valve

The purge control solenoid valve is controlled by the ECU; when the engine coolant temperature is low, and during idling, it closes, so that evaporated fuel is not taken into the surge tank. After engine warm-up, during ordinary driving, it opens so as to introduce evaporated fuel to the surge tank.

H050A01P-GAT

3. Exhaust Emission Control System

The Exhaust Emission Control System is a highly effective system which controls exhaust emission while maintaining good vehicle performance.

H060A01P-GAT

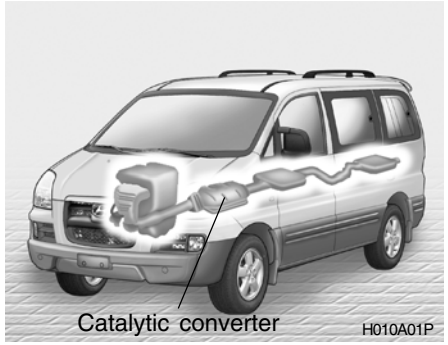

All Hyundai vehicles are equipped with a monolith type three-way catalytic converter to reduce the carbon monoxide, hydrocarbons and nitrogen oxides contained in the exhaust gas.

DO-IT YOURSELF MAINTENANCE

Engine Compartment 8-2
General Checks 8-6
Checking the Engine Oil 8-7
Checking the Engine Coolant 8-10
Checking the Battery 8-13
Air Conditioning Care 8-15
Changing the Climate Control Air Filter 8-16
Checking the Brake Fluid 8-17
Checking the Clutch Fluid 8-18
Checking the Automatic Transmission Fluid 8-18
Filling the Washer Reservoir 8-20
Windshield Wiper Blades 8-21
Tail Gate Window Washer Fluid 8-23
Checking the Freeplay 8-23
Checking Drive Belts 8-24
Parking Brake Lever Stroke 8-25
Tire 8-25

8

I010A01P-GAT

DIESEL ENGINE (2.6 N/A)

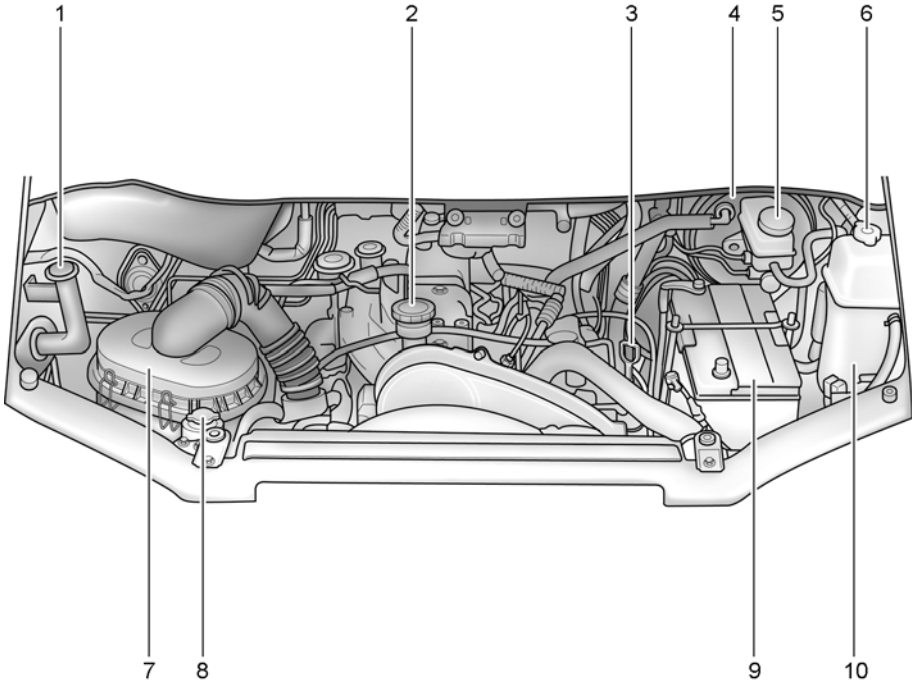

1. Windshield washer fluid reservoir cap
2. Engine oil filler cap
3. Engine oil level dipstick
4. Brake booster
5. Brake fluid reservoir
6. Radiator cap
7. Air cleaner
8. Power steering fluid reservoir
9. Battery
10. Engine coolant reservoir

I010B01P-GAT

DIESEL ENGINE (2.5 4D56)

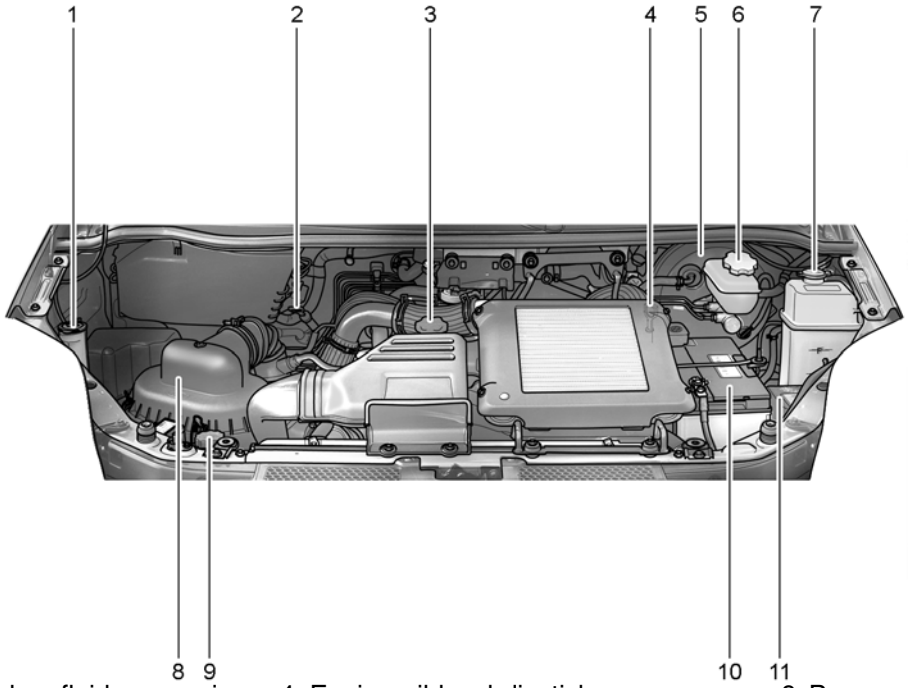

I010B02P

1. Windshield washer fluid reservoir cap
2. Automatic transmission fluid level dipstick (If installed)
3. Engine oil filler cap
4. Engine oil level dipstick
5. Brake booster
6. Brake fluid reservoir
7. Engine coolant reservoir
8. Air cleaner
9. Power steering fluid reservoir
10. Battery
11. Fuse and relay box

I010C01P-GAT

DIESEL ENGINE (2.5 CRDi)

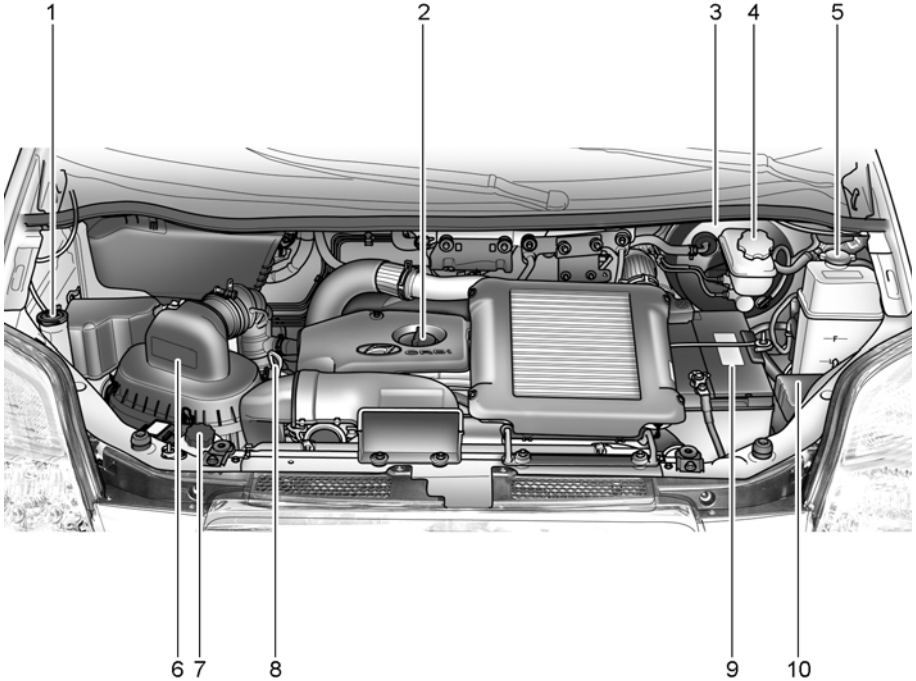

CAUTION:
When inspecting or servicing the engine, you should handle tools and other heavy objects carefully so that the plastic cover of the engine is not damaged.

I010C02P

1. Windshield washer fluid reservoir cap
2. Engine oil filler cap
3. Brake booster
4. Brake fluid reservoir
5. Engine coolant reservoir
6. Air cleaner
7. Power steering fluid reservoir
8. Engine oil level dipstick
9. Battery
10. Fuse and relay box

I011A02P-GAT

GASOLINE ENGINE (2.4 DOHC)

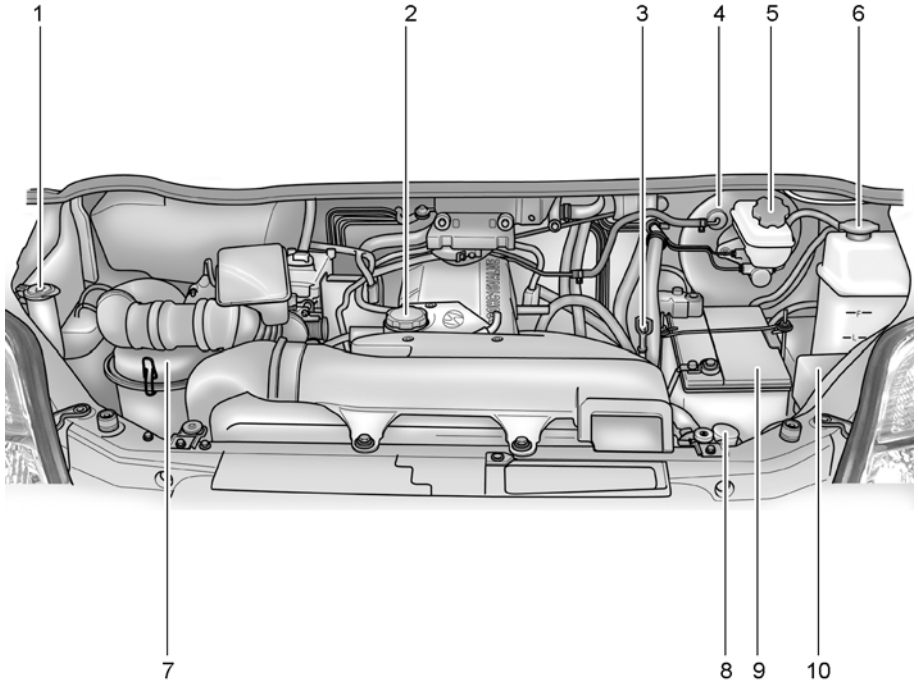

CAUTION:
When inspecting or servicing the engine, you should handle tools and other heavy objects carefully so that the plastic cover of the engine is not damaged.

I011A03P

1. Windshield washer fluid reservoir cap
2. Engine oil filler cap
3. Engine oil level dipstick
4. Brake booster
5. Brake fluid reservoir
6. Radiator cap
7. Air cleaner
8. Power steering fluid reservoir
9. Battery
10. Fuse and relay box

I020A03P-GAT

Engine Compartment

The following should be checked regularly:

- o Engine oil level and condition
- o Transmission fluid level and condition
- o Brake fluid level
- o Clutch fluid level
- o Engine coolant level
- o Windshield washer fluid level
- o Accessory drive belt condition
- o Coolant hose condition
- o Fluid leaks (on or below components)
- o Power steering fluid level and condition
- o Battery condition
- o Air filter condition

I030A03P-GAT

Vehicle Exterior

The following should be checked monthly:

- o Overall appearance and condition
- o Wheel condition and wheel nut tightness
- o Air cleaner filter condition
- o Exhaust system condition
- o Light condition and operation
- o Windshield glass condition
- o Wiper blade condition
- o Paint condition and corrosion
- o Fluid leaks
- o Door and hood lock condition
- o Tire pressure and condition (including spare)

I040A01P-GAT

Vehicle Interior

The following should be checked each time when the vehicle is driven:

- o Light operation
- o Windshield wiper operation
- o Horn operation
- o Defroster, heater operation (and air conditioning, if equipped)
- o Steering operation and condition
- o Mirror condition and operation
- o Turn signal operation
- o Accelerator pedal operation
- o Brake operation, including parking brake
- o Manual transmission operation, including clutch operation
- o Automatic transmission operation, including "Park" mechanism operation
- o Seat control condition and operation
- o Seat belt condition and operation
- o Sunvisor operation

If you notice anything that does not operate correctly or appear to be functioning correctly, inspect it carefully and seek assistance from your Hyundai dealer if service is needed.
Adequate care of your vehicle at regular intervals serves to preserve the value and appearance as long as possible.
Some maintenance items can be carried out by the owner (Consumer Information), while other should be done only by an authorized dealer (Periodic Inspection and Maintenance). This section describes only those items which can be carried out by the owner. In the event a malfunction or other problem is discovered, have it corrected by an authorized HYUNDAI dealer. This section contains information on inspection maintenance procedures that you can do yourself, if you so desire. Follow the instructions and cautions for each of the various procedures.

When checking or servicing the inside of the engine compartment, be sure the engine is stopped and has had a chance to cool down. If it is necessary to do work in the engine compartment with the engine running, be especially careful that your clothing, hair, etc., becomes not caught by the fan, V-belts, or other moving parts.

I070A07P-GAT

Recommended Oil Diesel Engine

2.5 CRDi only

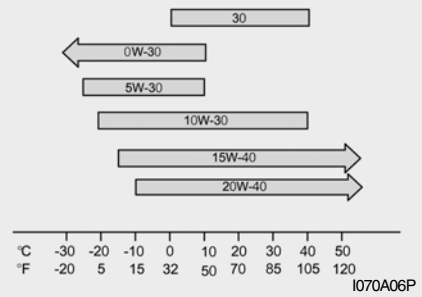

I070A06P

Except 2.5 CRDi

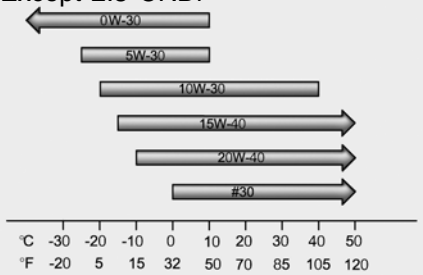

G030B01HR

Select engine oil of the proper SAE viscosity number according to the atmospheric temperature.
Recommended viscosity is given in the following illustration.

The engine oil quality should meet the following API classification:

2.6 N/A : CF-4 or ABOVE
2.5 4D56 : CF-4 or ABOVE
2.5 CRDi : CF-4 or ABOVE

The engine oil quality should meet the following ACEA classification:

2.6 N/A : B2 or B3
2.5 4D56 : B2 or B3
2.5 CRDi : B4 or ABOVE

NOTE:

For diesel-powered vehicle SAE 0W-30 oil should be used only in areas where extremely cold temperatures of 10°C (50°F) or below are experienced. For diesel-powered vehicle, if the atmospheric temperatures are 0°C (32°F) or below, SAE 30 oil must not be used.

This oil should be used only in areas where the atmospheric temperatures are 0°C(32°F) or above.

G030A02O-GAT

Recommended Oil Gasoline Engine

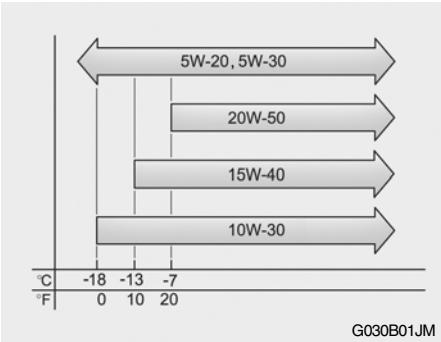

G030B01JM

Engine oil is essential to the performance and service of the engine. It is suggested that you check the oil level at least once a week in normal use and more often if you are on a trip or driving in severe conditions.

The engine oil quality should meet the following classification.

API SJ, SL or ABOVE,
ILSAC GF-3 or ABOVE

NOTE:

- **For good fuel economy, SAE 5W-20 (5W-30), ILSAC GF-3 engine oil is preferred regardless of regional option and engine variation.**
- **If SAE 5W-20, ILSAC GF-3 engine oil is not available, secondary recommended engine oil for corresponding temperature range can be used.**

I060A01P-GAT

To Check the Oil Level

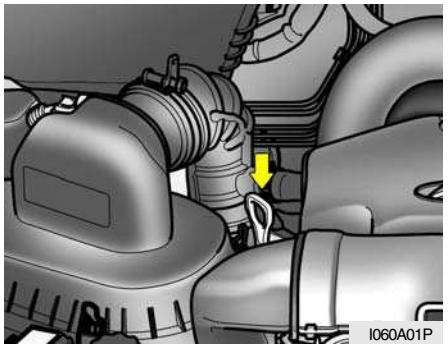

It is important to check the oil level at regular intervals or before starting a long trip.
This check must be made with the engine warm but not running. Park the vehicle on a level surface, stop the engine, and then wait a few moments to allow the engine oil in circulation to return to the oil pan to ensure accurate measurement. Remove the dipstick and wipe it with a clean cloth. Reinsert the dipstick and read the oil level, which should always be within the range indicated in the figure.

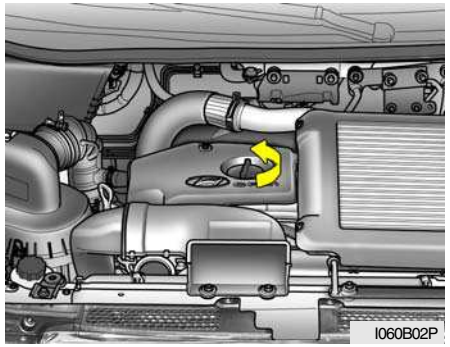

If the oil level is below the specified limit, remove the cap located on the cylinder head cover and add enough oil to raise the level to within the specified range. Be sure to use the specified engine oil and do not mix various types of oil. Also, avoid mixing different makes of oil together if possible. After adding oil, close the cap securely.

WARNING:
Be careful not to touch the hot exhaust manifold.

CAUTION:
Slowly pour the recommended oil using by a funnel. Do not overfill not to damage engine.

NOTE:
Check the oil level on the dipstick once again after adding the oil.

G350A01A-GAT

ENGINE OIL CONSUMPTION

Function of Engine Oil

Engine oil has the primary function of lubricating and cooling the inside of the engine.

Engine oil consumption

It is normal that an engine should consume some engine oil while normal driving. The cause of oil consumption in a normal engine are as follows;

- o Engine oil is used to lubricate pistons, piston rings and cylinders.
  A thin film of oil is left on the cylinder wall when a piston moves downwards in the cylinder. High negative pressure generated during engine operation sucks some of the oil into the combustion chamber.
  This oil with some oil of the cylinder wall is burned by the high temperature combustion gases during the combustion process.
- o The engine oil consumption is strongly effected by the viscosity and quality of oil, engine rpm and driving condition etc. The engine oil is more consumed under severe driving conditions such as high speeds and frequent acceleration and deceleration than normal driving condition.

CHECKING THE ENGINE COOLANT

I080A02P-GAT

WARNING:
Do not remove the radiator cap when the engine is hot. When the engine is hot, the engine coolant is under pressure and may erupt through the opening if the cap is removed. You could be seriously burned if you do not observe this precaution. Do not remove the radiator cap until the radiator is cool to the touch.

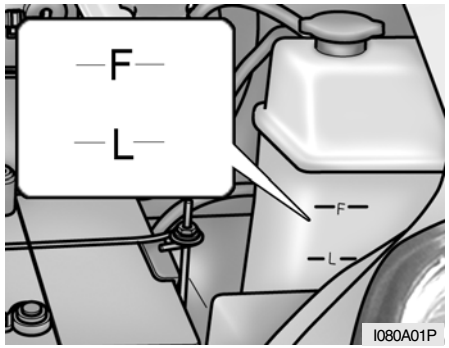

I080A01P

A translucent coolant reservoir tank is in the engine compartment.
The coolant level in this tank should be kept between the "L" and "F" marks when measured while the engine is warm and idling.
The cooling system is a closed system and normally the loss of coolant should be very slight. A noticeable drop in the coolant level could indicate leakage.
If this occurs, have the system checked at an authorized HYUNDAI dealer as soon as possible.
If the level should drop below the "L" level on the reservoir tank, add coolant.
Also, if the reservoir tank is completely empty, remove the radiator cap and add coolant until the level reaches the filler neck.

WARNING:
Do not open the reservoir tank lid or radiator cap while the engine is hot. The coolant system is under pressure and any hot coolant escaping could cause severe burns.

G050B01A-AAT
Recommended Engine Coolant

Use a high quality ethylene-glycol coolant in a 50/50 mix with water. The engine coolant should be compatible with aluminum engine parts. Additional corrosion inhibitors or additives should not be used. The cooling system must be maintained with the correct concentration and type of engine coolant to prevent freezing and corrosion. Never allow the concentration of antifreeze to exceed the 60% level or go below the 35% level, or damage to the cooling system may result. For proper concentration when adding or replacing the engine coolant, refer to the following table.

Ambient temperature °C (°F)	Engine coolant concentration	
	Antifreeze solution	Water
-15 (5)	35%	65%
-25 (-13)	40%	60%
-35 (-31)	50%	50%
-45 (-49)	60%	40%

G050C01A-GAT
To Check the Coolant Level

The coolant level can be seen on the side of the plastic coolant reservoir. The level of the coolant should be between the "L" and "F" lines on the reservoir when the engine is cold. If the level is below the "L" mark, add engine coolant to bring it up between "L" and "F". If the level is low, inspect for coolant leaks and recheck the fluid level frequently. If the level drops again, visit your Hyundai dealer for an inspection and diagnosis of the reason.

G050D02P-AAT

To Change the Coolant

The coolant should be changed at those intervals specified in the vehicle maintenance schedule in Section 6.

CAUTION:
Engine coolant can damage the finish of your car. If you spill engine coolant on the car, wash it off thoroughly with clean water.

1. Park the car on level ground, set the parking brake and remove the radiator cap when cool.
2. Be sure your drain receptacle is in place. Open the drain cock on the radiator. Allow all the engine coolant to drain from the cooling system, then securely close the drain cock.
3. Check Section 9 for the capacity of the cooling system in your car. Then, following the manufacturer's directions on the engine coolant container, add the appropriate quantity of coolant to the radiator.
4. Turn the radiator cap counterclockwise without pressing down on it, until it stops. This relieves any pressure remaining in the cooling system. And remove the radiator cap by pushing down and turning counterclockwise.
   Now fill the radiator with clean demineralized or distilled water. Continue to add clean demineralized or distilled water in small quantities until the fluid level stays up in the radiator neck.
5. Start the engine, top off the radiator with water and then add engine coolant to the reservoir until the level is between "L" and "F".
6. Replace the radiator and reservoir caps and check to be sure the drain cocks are fully closed and not leaking.

WARNING:
The cooling fan is controlled by engine coolant temperature and may sometimes operate even when the engine is not running. Use extreme caution when working near the blades of the cooling fan so that you are not injured by a rotating fan blade. As the engine coolant temperature decreases, the fan will automatically shut off. This is a normal condition.

CHECKING THE BATTERY

G210A01A-AAT

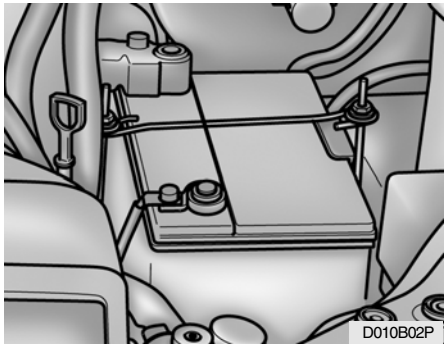

WARNING:
Batteries can be dangerous! When working with batteries, carefully observe the following precautions to avoid serious injuries.

The fluid in the battery contains a strong solution of sulfuric acid, which is poisonous and highly corrosive. Be careful not to spill it on yourself or the car. If you do spill battery fluid on yourself, immediately do the following:

- o If battery fluid is on your skin, flush the affected areas with water for at least 15 minutes and then seek medical assistance.
- o If battery fluid is in your eyes, rinse out your eyes with water and get medical assistance as soon as possible. While you are being driven to get medical assistance, continue to rinse your eyes by using a sponge or soft cloth saturated with water.
- o If you swallow battery fluid, drink a large quantity of water or milk followed by milk of magnesia, eat a raw egg or drink vegetable oil. Get medical assistance as soon as possible.

While batteries are being charged (either by a battery charger or by the vehicle's alternator), they produce explosive gases. Always observe these warnings to prevent injuries from occurring:

- o Charge batteries only in a well ventilated area.
- o Do not permit flames, sparks or smoking in the area.
- o Keep children away from the area.

I090C01P-GAT

Disconnection and connection

Never disconnect the battery while the engine is running; doing so could damage the vehicle's electrical components. First disconnect the negative terminal and then the positive terminal. When connecting the battery, first connect the positive terminal and then the negative terminal.

CAUTION:
- **o Keep the terminals clean. After the battery is connected, apply terminal protection grease. To clean the terminals, use lukewarm water.**
- **o Never short-circuit the battery; doing so could cause it to overheat and be damaged.**
- **o Do not smoke or bring an open flame near the battery; doing so could ignite the explosive gas generated by the battery.**

- **The battery electrolyte is extremely caustic. Do not allow it to come in contact with your eyes, skin, clothing, or the painted surfaces of the vehicle.**
  Spilled electrolyte should be flushed immediately with ample amounts of water. Irritation to eyes or skin from contact with electrolyte requires immediate medical attention.
- **If the battery is to be quick-charged, first disconnect the battery cables.**
- **In order to prevent a short circuit, be sure to disconnect the negative (-) terminal before doing anything else.**

G210B01Y-GAT

Checking the Battery

Keep the battery clean. Any evidence of corrosion around the battery posts or terminals should be removed using a solution of household baking soda and warm water. After the battery terminals are dry, cover them with a light coating of grease.

WARNING:

Always read the following instructions carefully when handling a battery.

Keep lighted cigarettes and all other flames or sparks away from the battery.

Hydrogen, which is a highly combustible gas, is always present in battery cells and may explode if ignited.

Keep batteries out of the reach of children because batteries contain highly corrosive SULFURIC ACID. Do not allow battery acid to contact your skin, eyes, clothing or paint finish.

If any electrolyte gets into your eyes, flush your eyes with clean water for at least 15 minutes and get immediate medical attention. If possible, continue to apply water with a sponge or cloth until medical attention is received.

If electrolyte gets on your skin, thoroughly wash the contacted area.
If you feel a pain or a burning sensation, get medical attention immediately.
Wear eye protection when charging or working near a battery.
Always provide ventilation when working in an enclosed space.

- **When lifting a plastic-cased battery, excessive pressure on the case may cause battery acid to leak, resulting in personal injury. Lift with a battery carrier or with your hands on opposite corners.**
- **Never attempt to charge the battery when the battery cables are connected.**

AIR CONDITIONING CARE

o The electrical ignition system works with high voltage. Never touch these components with the engine running or the ignition switched on.

G140A01A-AAT

Keeping the Condenser Clean

The air conditioning condenser (and engine radiator) should be checked periodically for accumulation of dirt, dead insects, leaves, etc. These can interfere with maximum cooling efficiency. When removing such accumulations, brush or hose them away carefully to avoid bending the cooling fans.

G140B01A-AAT

Checking the Air Conditioning Operation

1. Start the engine and let it run at a fast idle for several minutes with the air conditioning set at the maximum cold setting.
2. If the air coming out of the in-dash vents is not cold, have the air conditioning system inspected by your Hyundai dealer.

CAUTION:
Running the air conditioning system for extended periods of time with a low refrigerant level may damage the compressor.

G140C01A-AAT

Lubrication

To lubricate the compressor and the seals in the system, the air conditioning should be run for at least 10 minutes each week. This is particularly important during cool weather when the air conditioning system is not otherwise in use.

G140D01HP-GAT

Checking the Compressor Drive Belt

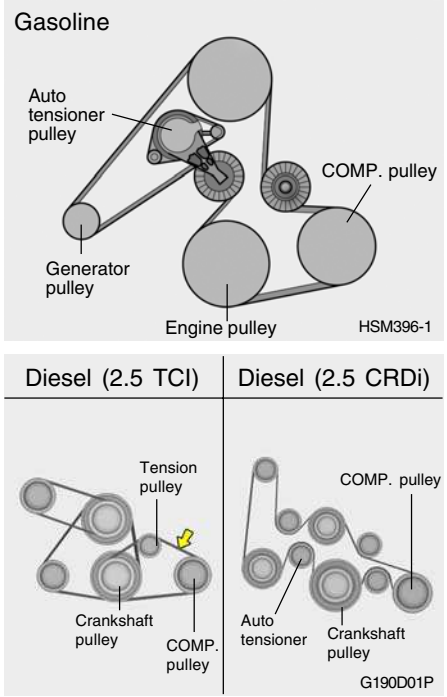

When the air conditioning is being used regularly, the compressor drive belt tension should be checked at least once a month.
To check the drive belt tension, press down on the belt halfway between the engine crankshaft and compressor pulleys. Pressing with your finger, you should not be able to deflect this belt anymore than 8.0 mm. If you have the instruments to check it with a force of 98N (22 lb.), the deflection should be approx. 8.0 mm (0.315 in.). If the belt is too loose, have it adjusted by your Hyundai dealer.

NOTE:

The compressor drive belt tension for diesel engine (2.5 CRDi only) is adjusted automatically.

CHANGING THE CLIMATE CONTROL AIR FILTER

B140E02P-AAT

(For Evaporator and Blower Unit) (Minibus/Van)

The climate control air filter is located in the air intake duct behind the windshield washer reservoir.
It helps to decrease pollutants from entering the car.

1. Open the engine hood.

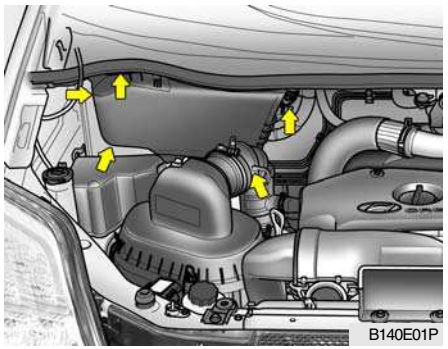

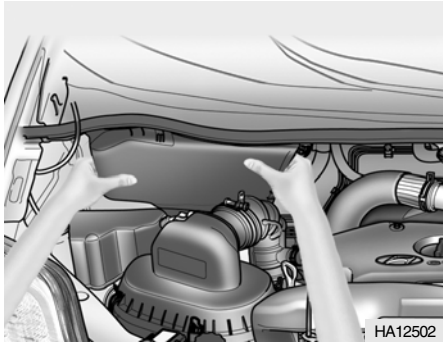

2. Remove the 5 clamps on the air intake duct.

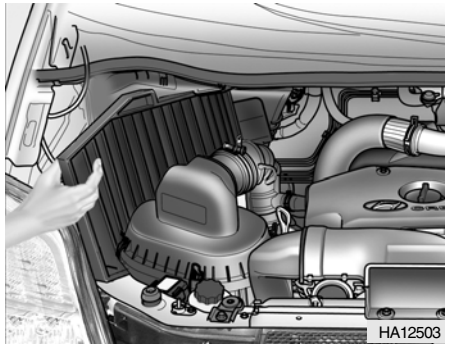

3. Replace the climate control air filter with a new one.
4. Installation is the reverse order of disassembly.

CAUTION:
Be sure to install the climate control air filter in the direction of the arrow sign. Otherwise, it may cause noise or deterioration.

CHECKING THE BRAKE FLUID

I100A02P-GAT

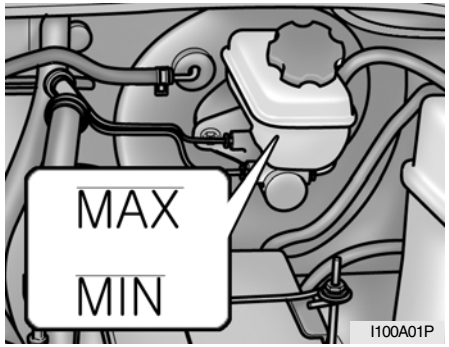

Check the brake fluid level in the reservoir.
The brake fluid level must be between the "MAX" and "MIN" marks on the reservoir.
The fluid level falls slightly with wear of the brake pads but it does not indicate any abnormality.
If the brake fluid level falls markedly in a short time, it indicates leaks from the brake system. In such a case, have your vehicle checked by an authorized HYUNDAI dealer.
Use SAE J1703 (or DOT3 or DOT 4) or equivalent type brake fluid.

On a vehicle with the brake fluid warning lamp, the brake fluid level is monitored by a float. When the brake fluid level falls to below the "MIN" mark, the brake fluid warning lamp lights up.

WARNING:

- **Use only the specified brake fluid. Also, the additives in different brands may result in a chemical reaction when mixed together, so avoid mixing different brands if possible.**
- **Use extreme caution in filling the brake fluid because it is toxic and corrosive, and it can harm your eyes and damage painted surface. If the fluid gets in your eyes, flush your eyes with clean water.**

CHECKING THE CLUTCH FLUID

I110A01P-GAT

(If installed)

In the case of vehicles with the hydraulic operating clutch, the reservoir for the clutch fluid also serves as the reservoir for the brake fluid. See the paragraph on the brake fluid.

CHECKING THE AUTOMATIC TRANSMISSION FLUID

I120A02P-GAT

(If installed)

Transmission fluid in the automatic transmission should be changed at those intervals specified in the vehicle maintenance schedule in Section 6.

NOTE:

Automatic transmission fluid is a red color. As driving distance increases, the fluid color turns darkish red gradually. It is a normal condition and you should not judge the need to replace based upon the changing color.
You must replace the automatic transmission fluid in accordance with intervals specified in the vehicle maintenance schedule in section 6.

I120B03P-GAT

Recommended Fluid

Your Hyundai automatic transmission is specially designed to operate with MOBIL DEXRON-II or DIAMOND ATF SP-I type fluid.

I120C02P-GAT

Automatic transmission fluid capacity

The fluid capacity of the automatic transmission will be found on page 9-5.

WARNING:
The transmission fluid level should be checked when the engine is at normal operating temperature. This means that the engine, radiator, exhaust system etc., are very hot. Exercise great care not to burn yourself during this procedure.

I120D03P-GAT

To Check the transmission Fluid Level

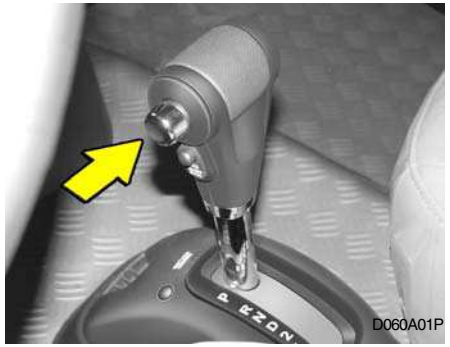

Park the vehicle on level ground with the parking brake engaged. When the transmission fluid level is checked, the transmission fluid should be at normal operating temperature and the engine idling.
While the engine is idling, apply the brakes and move the gear selector lever from "P" to each of its other positions-"R", "N", "D", "2", "L"-and then return to "N" or "P" with the engine still idling:

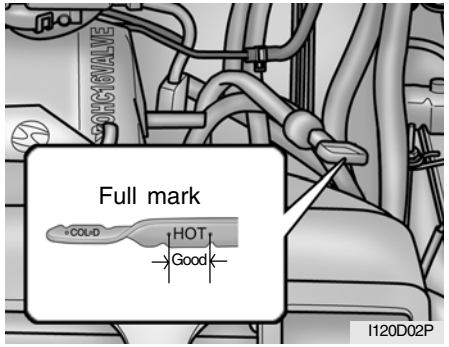

1. Open the hood, being careful to keep hands, long hair and clothing clear of any moving parts.
2. Remove the transmission dipstick, wipe it clean, reinsert the dipstick as far as it will go, then remove it again. Now check the fluid level on the dipstick. It should be in the "HOT" range on the dipstick.
3. If the transmission fluid level is low, use a funnel to add transmission fluid through the dipstick tube until the level reaches the "HOT" range. Do not overfill, otherwise the transmission could be damaged.

WARNING:
The cooling fan is controlled by engine coolant temperature and may sometimes operate even when the engine is not running. Use extreme caution when working near the blades of the cooling fan, so that you are not injured by a rotating fan blade. As the engine coolant temperature decreases, the fan will automatically shut off. This is a normal condition.

WARNING (Diesel only):
Never work on injection system with engine running or within 30 seconds after shutting off engine. High pressure pump, rail, injectors and high pressure pipes are subject to high pressure even after the engine stopped. The fuel jet produced by fuel leaks may cause serious injury, if it touch the body. People using pacemakers should not move than 30cm closer to the ECU or wiring harness within the engine room while engine is running, since the high currents in the Common Rail system produce considerable magnetic fields.

FILLING THE WASHER RESERVOIR

I130A02P-GAT

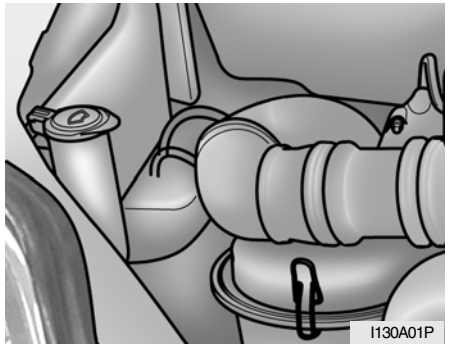

The washer fluid reservoir supplies fluid to the windshield washer system.
A good quality washer fluid should be used to fill the washer reservoir. The fluid level should be checked more frequently during bad weather or whenever the washer system is in more frequent use.

WINDSHIELD WIPER BLADES

CAUTION:

- **Radiator antifreeze (engine coolant) should not be used in the washer system because it will damage the car's finish.**
- **The washer lever should not be pulled and the washer should not be operated if the washer reservoir is empty. This can damage the washer fluid pump.**

WARNING:

- **Windshield washer fluid agents contain some amounts of alcohol and can be flammable under certain circumstances. Do not allow sparks of flame to contact the washer fluid or the washer fluid reservoir. Damage to the vehicle or its occupants could occur.**
- **Windshield washer fluid is poisonous to humans and animals. Do not drink windshield washer fluid. Serious injury or death could occur.**

G080A02A-AAT

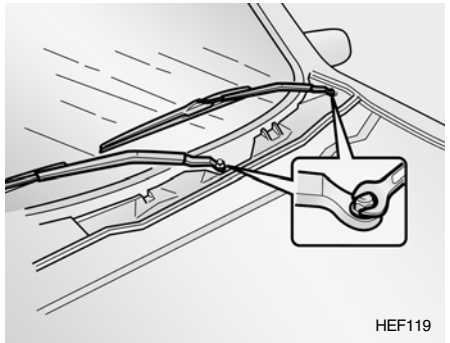

The wiper blades should be carefully inspected from time to time and cleaned to remove accumulations of road film or other debris. To clean the wiper blades and arms, use a clean sponge or cloth with a mild soap or detergent and water. If the wipers continue to streak or smear the glass, replace them with genuine Hyundai replacement parts or their equivalent.

CAUTION:

- **Do not operate the wipers on dry glass. This can result in more rapid wear of the wiper blades and may scratch the glass.**
- **Keep the blade rubber out of contact with petroleum products such as engine oil, gasoline, etc.**

G080B01HR-GAT

Replacing the Wiper Blades

To replace the wiper blades, raise the wiper to the vertical.

To remove the wiper blade

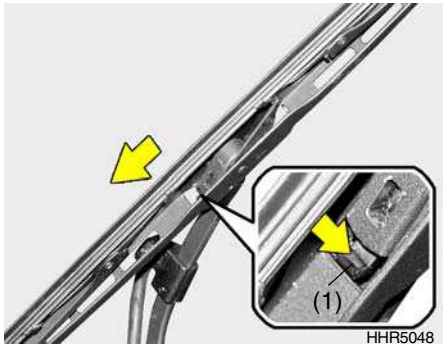

1. Push down the wiper blade with the locking clip (1) pressed to detach it from the wiper arm.

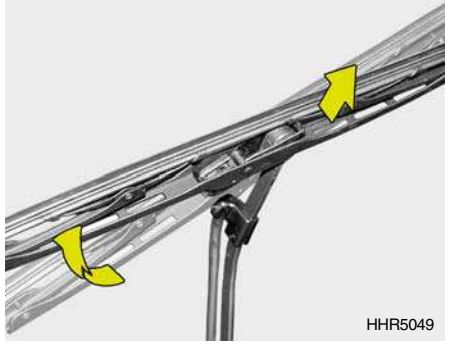

2. Raise the wiper blade lightly and pull up it.

To install the wiper blade

1. Put a new wiper blade onto the wiper arm and lower the wiper blade at the level of the wiper arm as shown in the drawing.

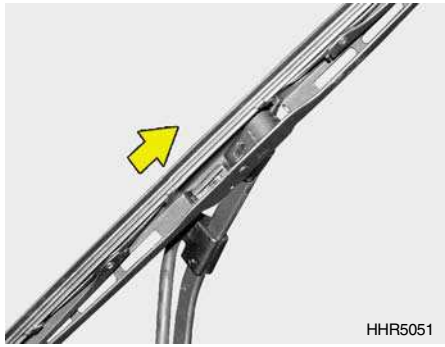

2. Pull up the wiper blade until you hear an audible "click" to engage in the end of the wiper arm.

NOTE:
Do not allow the wiper arm to fall against the windshield.

TAIL GATE WINDOW WASHER FLUID

I140A02P-GAT

(Minibus/Van) (If installed)

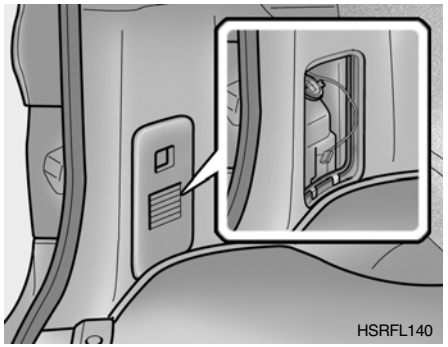

After opening the cover of quarter trim panel which is located on the left side of quarter trim, check the fluid level. If the fluid level is low, refill the washer fluid.

CHECKING THE FREEPLAY

G150A01A-GAT

Steering Wheel

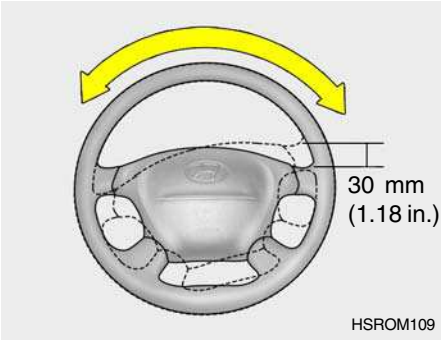

To check the steering wheel freeplay, stop the car with the wheels pointed straight ahead and gently move the steering wheel back and forth. Use very light finger pressure and be sensitive to changes in resistance that mark the limits of the freeplay. If the freeplay is greater than specified, have it inspected by your Hyundai dealer and adjusted or repaired if necessary.

G160A01A-GAT

Clutch Pedal

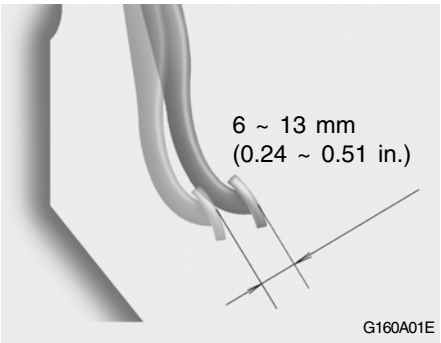

With the engine off, press lightly on the clutch pedal until you feel a change in resistance. This is the clutch pedal freeplay. The freeplay should be within the limits specified in the illustration. If it is not, have it inspected by your Hyundai dealer and adjusted or repaired if necessary.

G170A01A-GAT

Brake Pedal

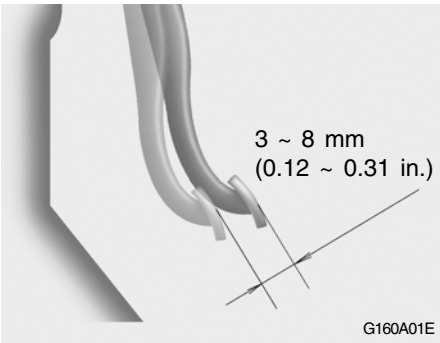

With the engine off, press down on the brake pedal several times to reduce the vacuum in the brake booster.
Then, using your hand, press down slowly on the brake pedal until you feel a change in resistance. This is the brake pedal freeplay. The freeplay should be within the limits specified in the illustration. If it is not, have it inspected by your Hyundai dealer and adjusted or repaired if necessary.

G180A01A-GAT

CHECKING BRAKE PEDAL CLEARANCE

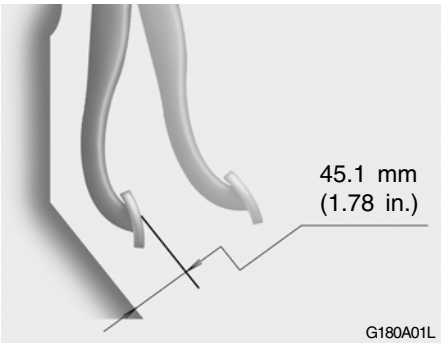

You need a helper to check the brake pedal clearance. With the engine running, have your helper press down on the brake pedal several times and then hold it down with a force of about 490N (50 kg, 110 lbs). The brake pedal clearance is the distance from the top surface of the brake pedal to the asphalt sheeting under the floor mat. If the brake pedal clearance is not within the limits specified in the illustration, have it inspected by your Hyundai dealer and adjusted or repaired if necessary.

CHECKING DRIVE BELTS

G190A01P-GAT

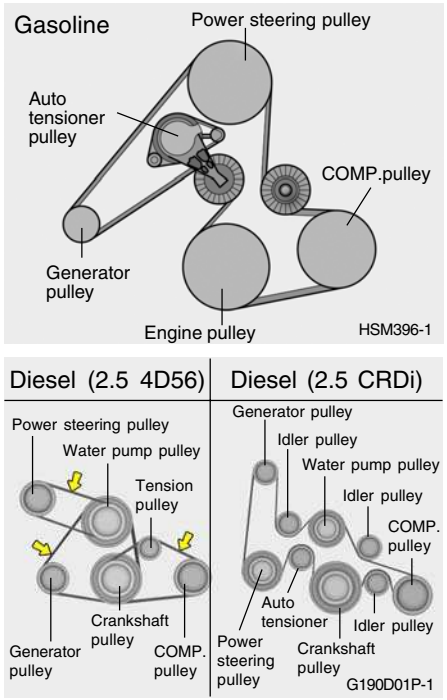

Drive belts should be checked periodically for proper tension and adjusted if necessary. At the same time, belts should be examined for cracks, wear, fraying or other evidence of deterioration and replaced if necessary.
Belt routing should also be checked to be sure there is no interference between the belts and other parts of the engine. After a belt is replaced, the new belt should be adjusted again after two or three weeks to eliminate slack resulting from initial stretching after use.

NOTE:
The drive belt tension for diesel engine (2.5 CRDi only) is adjusted automatically.

PARKING BRAKE LEVER STROKE

I230A01P-GAT

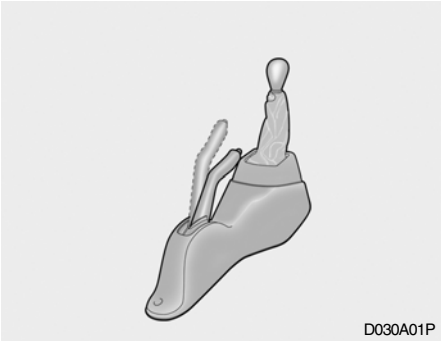

Pull the parking brake lever all the way up to check the number of "clicks" that the ratchet makes. One click represents a lever movement of one notch. The lever should move the specified number of notches for normal brake application.

Parking brake lever stroke;

If the parking brake lever stroke is not within the standard range(5 to 7 notches), have the brake lever adjusted at an authorized HYUNDAI dealer.

TIRE

I150A03P-GAT

Tire condition

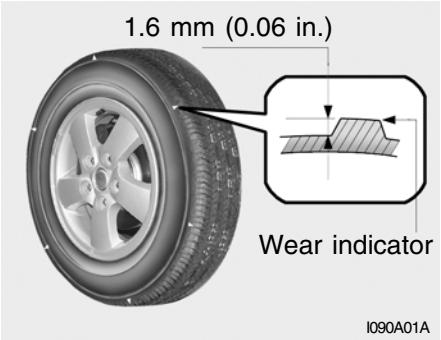

Check the tires for cuts, cracks and other damage. Replace the tires if there are deep cuts or cracks. Also check each tire for pieces of metal or pebbles.
The use of worn tires can be very dangerous because of the greater chance of skidding or hydroplaning. The tread depth of the tires must exceed 1.6 mm (0.06 in.) in order for the tires to meet the minimum requirement for use.
If there are belt-line wear indicators on the tires, they will appear in six places on the surface of the tire thereby indicating that the tire no

longer meets the minimum requirement for use. When these wear indicators appear, the tires must be replaced with new one. Confirm that the wheel nuts are tightened sufficiently. Refer to the section of this manual entitled "In case of emergency" for information concerning care of the tires.

WARNING:

- **Driving on worn-out tires is dangerous! Worn-out tires can cause loss of braking effectiveness, steering control and traction. When replacing tires, never mix radial and bias-ply tires on the same car. If you replace radial tires with bias-ply tires, they must be installed in sets of four.**
- **Your vehicle is equipped with tires designed to provide for safe ride and handling capability. Do not use a size and type of tire and wheel that is different from the one that is originally installed on your vehicle.**

It can affect the safety and performance of your vehicle, which could lead to handling failure or rollover and serious injury. When replacing the tires, be sure to equip all four tires with the tire and wheel of the same size, type, tread, brand and load-carrying capacity. If you nevertheless decide to equip your vehicle with any tire/wheel combination not recommended by Hyundai for off-road driving, you should not use these tires for highway driving.

I160A03P-GAT

Tire inflation pressure

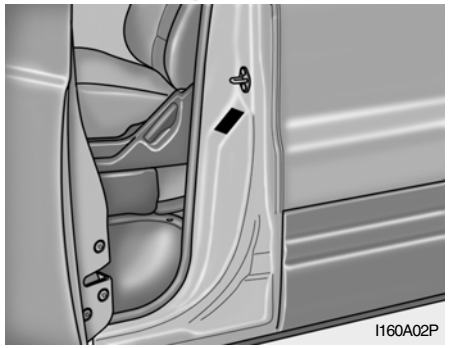

Check the tire inflation pressure of all the tires while they are cold; if insufficient or excessive, adjust to the specified value. After the tire inflation pressure has been adjusted, check the tires for damage and air leaks. Be sure to put rubber caps on the valves.

kg/cm² (psi)

Vehicle	Tire size	Front	Rear
MINIBUS	205/70R 15	2.8(40)	2.8(40)
	215/80R 15	2.2(32)	2.2(32)
	205/70R 15C-6PR	2.8(40)	2.8(40)
	205/70R 15C-8PR	2.8(40)	4.5(65)

kg/cm² (psi)

Vehicle	Tire size	Front	Rear
VAN	205/70R 15C-8PR	2.8(40)	4.5(65)
TRUCK	195R 14C-6PR	2.8(40)	-
	195R 13C-8PR	-	3.5(50)

I240A01P-GAT

Rotation

Bias tires

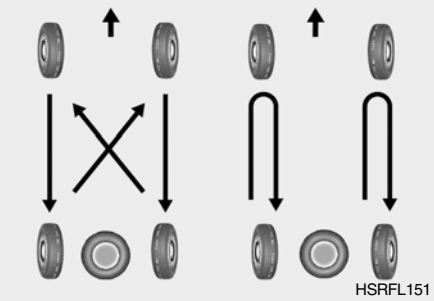

Radial tires

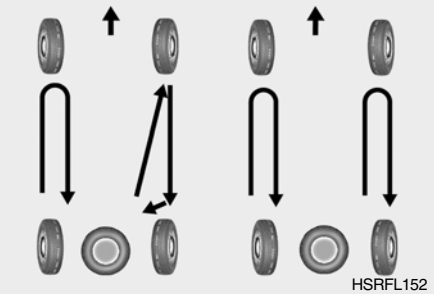

Tires tend to wear unevenly over a long period of service. To make sure that the tires wear evenly as possible and for longer tire life, rotate the wheels in the sequence illustrated.
Take the vehicle to an authorized HYUNDAI dealer to have the chance of the wheels properly adjusted.

CAUTION:
If the front wheels are of a different type from the rear and spare wheels, do not attempt to mount the wheel for front onto rear. In this instance, use the type 2 wheel rotation method.

VEHICLE SPECIFICATIONS

Measurement 9-2
Engine 9-3
Lubrication Chart 9-4

9

J010A03P-GAT

MEASUREMENT

mm (in.)

MINIBUS, VAN		SHORT					LONG			
		3	6	7		9	3	6	9	12
		VAN	VAN	2WD	4WD		VAN	VAN		
Overall length		4,695(184)	←	←	4,825(189)	4,695(184)	5,035(198)	←	←	←
Overall width		1,820(71)	←	←	←	←	←	←	←	←
Overall height		1,900(74)	←	1,885(74)	1,995(78)	1,885(74)	1,980(77)	←	1,970(77)	←
Wheel base		2,810(110)	←	←	←	←	3,080(121)	←	←	←
Wheel tread	Front	1,570(61)	←	←	1,565(61)	1,570(61)	←	←	←	←
	Rear	1,545(60)	←	←	1,560(61)	1,545(60)	←	←	←	←

J010A02P-GAT

MEASUREMENT

mm(in.)

TRUCK		LONG(1ton)	EXTRA LONG (1.25 ton)	
		STANDARD	STANDARD	SUPER
Overall length		5085 (200)	5415 (213)	←
Overall width		1820 (71)	1820 (71)	←
Wheel base		3080 (121)	3280 (129)	←
Wheel tread	Front	1570 (62)	1570 (62)	←
	Rear	1408 (55)	1408 (55)	←

J020A02P-GAT

FUEL TANK SYSTEM

ITEMS	MINIBUS, VAN	TRUCK
FUEL TANK CAPACITY	65L	70L

ENGINE

J040A06P-GAT

ITEMS	DIESEL			GASOLINE
Engine type	2.6 N/A	2.5 4D56	2.5 CRDi	2.4 DOHC
Total displacement	2,607 cc	2,476 cc	2,497 cc	2,351 cc
Compression ratio	22	20.5	17.6	10
Firing order	1 - 3 - 4 - 2	←	←	←
Injection (or Ignition) timing	ATDC 5°	Elec.:ATDC 9°±1° Mech.:ATDC 7°±1° (A tropical region) Mech.:ATDC 9°±1° (Except a tropical region)	-	BTDC 8°± 5°
Idle speed (RPM)	850 ± 100	750 ± 100	800 ± 100	750 ± 100

J050A02P-GPT

ELECTRICAL

ITEMS	DIESEL		GASOLINE (Minibus/Van)
Bateria	12V-90AH MF, 100AH MF*		12V-68AH MF
Alternador	2.5 CRDi	12V-110A	13.5V-110A
	4D56 TCI(With A/CON)	12V-110A	
	4D56 TCI(Without A/CON)	12V-75A	
Motor arranque	12V- 2.2kw		12V-1.2 kw

* FOR USE ONLY IN COLD AREA

4 LUBRCATION CHART

J060A08P-GAT

ITEM		OIL & GREASE STANDARD		QUANTITY (LITER)
ENGINE OIL Recommends Shell HELIX Motor oils	2.6 N/A (Diesel)	API CF-4 or ABOVE ACEA B2 or B3	SAE 30 (ABOVE 0°C) SAE 20W-40 (ABOVE -10°C) SAE 15W-40 (ABOVE -15°C) SAE 10W-30 (-20°C ~ 40°C) SAE 5W-30 (-25°C ~ 40°C) SAE 0W-30 (BELOW 10°C) *1	Engine Oil : 6.1 at Oil Pan : 4.9
	2.5 4D56 (Diesel)	API CF-4 or ABOVE ACEA B2 or B3		
	2.5 CRDi (Diesel)	API CF-4 or ABOVE ACEA B4 or ABOVE	SAE 30 (0°C ~ 40°C) SAE 20W-40 (ABOVE -10°C) SAE 15W-40 (ABOVE -15°C) SAE 10W-30 (-20°C~ 40°C) SAE 5W-30 (-25°C~ 40°C) SAE 0W-30 (BELOW 10°C) *1	Engine Oil : 7.4 at Oil Pan : 6.6 (MAX) 4.9 (MIN)
		*1. Restricted by driving condition and area.		
	2.4 DOHC (Gasoline)	API SJ, SL or ABOVE, ILSAC GF-3 or ABOVE	SAE 5W-20, 5W-30 SAE 10W-30 (ABOVE -18°C) SAE 15W-40 (ABOVE -13°C) SAE 20W-50 (ABOVE -7°C)	Engine Oil : 4.3 at Oil Pan : 4.0 (MAX) 3.0 (MIN) at Oil Filter : 0.3
ENGINE OIL CONSUMPTION		NORMAL DRIVING CONDITION		Max. 1L/ 1,500 km
		SEVERE DRIVING CONDITION		Max. 1L/ 1,000 km

J060A08P-GAT

ITEMS	OIL & GREASE STANDARD	QUANTITY (LITER)	
MANUAL TRANSMISSION OIL	HYUNDAI GENUINE PARTS MTF 75W/85 (API GL-4)	GASOLINE	2.0
		DIESEL	2.6 N/A : 2.4
			2.5 4D56 : 2.4
			2.5 CRDi : 3.2
AUTOMATIC TRANSMISSION OIL	MOBIL DEXRON-II or DIAMOND ATF SP-I	GASOLINE	7.53
		DIESEL	2.6 N/A(long van): 8.5
			2.6 N/A: 7
			2.5 4D56 (2WD) : 7.9
			2.5 4D56 (4WD) : 9.83
			2.5 CRDi (2WD) : 8.3
			2.5 CRDi (4WD) : 11.7
TRANSFER CASE OIL	DIAMOND ATF SP II	Minibus, Van : 1.3	
POWER STEERING OIL	PSF-3	0.8	
COOLANT	HIGH QUALITY ETHYLENE GLYCOL BASE FOR ALUMINUM RADIATOR	Minibus : 13, Van : 10, Truck : 7.2	
CLUTCH & BRAKE FLUID	SAE J 1703 EQUIVALENT	As required	
FRONT, REAR WHEEL BEARING	SAE J310a, MULTI-PURPOSE GREASE NLGI-2 OR EQUIVALENT.	As required	
REAR AXLE	API GL-4 (MS517-15) : SAE 90, 140	Minibus, Van : 2.6, Truck : 1.7	
STEERING GEAR BOX	API GL-5 (MS517-15) : SAE 80	As required	

INDEX

10

A
ADJUSTABLE FRONT SEATS 1-32
AIR CONDITIONING CARE 8-15
AIR CONDITIONING SYSTEM 2-44
ALTIMETER 2-18
ANTENNA 2-73
ANTI-LOCK BRAKE SYSTEM 3-24
APPEARANCE CARE 5-2
ASHTRAY 2-36
AUDIO FAULT CODE 2-70
AUDIO SYSTEM
Cassette Tape Player Operation (H240, H280)
..... 2-54, 2-65
Compact Disc Player Operation (H260, H280)
..... 2-59, 2-67
Stereo Radio Operation (H240, H260, H280)
..... 2-51, 2-56, 2-62
AUTOMATIC TRANSMISSION 3-10
AUTOMATIC TRANSMISSION FLUID 8-18
AUXILIARY SEAT 1-38

B
BACK WARNING SYSTEM 3-25
BATTERY 8-13
BEFORE STARTING THE ENGINE 3-3
BI-LEVEL HEATING 2-42
BLEEDING THE FUEL SYSTEM 4-21
BRAKE FLUID 8-17
BRAKE PEDAL 3-22
BRAKE SYSTEM 3-20
BULB WATTAGE 4-38

C
CARE OF CASSETTE TAPES 2-72
CARE OF DISC 2-71
CARRYING CHILDREN 1-16
CATALYTIC CONVERTER 7-3
CENTRAL DOOR LOCKS 1-15
CHANGING A FLAT TIRE 4-7
CHANGING AND REPLACING FUSES 4-27
CHANGING THE CLIMATE CONTROL AIR FILTER . 8-16
CHECKING THE DRIVE BELTS 8-24
CHECKING THE FREEPLAY 8-23
CHILD PROTECTION SLIDE DOOR 1-16
CHILD RESTRAINT SYSTEM 1-46
CIGARETTE LIGHTER 2-27
CLIMATE CONTROL AIR FILTER 2-47
CLUTCH FLUID 8-18

D
DAY/NIGHT INSIDE REARVIEW MIRROR 2-34
DEFROSTING/DEFOGGING 2-43
DIGITAL CLOCK 2-37
DOOR LOCKS 1-13
DRINK HOLDER 2-35
DRIVING FOR ECONOMY 3-26
DRIVING WITH ELECTRONIC DUAL-RANGE
AUTOMATIC TRANSMISSION 3-14

E
EMISSION CONTROL SYSTEM 7-2
ENGINE 9-3
ENGINE COMPARTMENT 8-2
ENGINE COOLANT 8-10
ENGINE COOLANT TEMPERATURE GAUGE 2-12
ENGINE EXHAUST CAN BE DANGEROUS! 3-2
ENGINE NUMBER 1-6
ENGINE OIL 8-7
ENGINE RPM ADJUSTMENT KNOB 2-24
EXPLANATION OF SCHEDULED
MAINTENANCE ITEMS 6-12

F
FOUR-WHEEL DRIVE (4WD) 3-16
FRONT DOOR EDGE WARNING LIGHT 2-25
FRONT DOOR WINDOW GLASS 1-28
FRONT FOG LIGHT SWITCH 2-25
FRONT/REAR WINDOW DEFROSTER SWITCH 2-26
FUEL GAUGE 2-12
FUEL RECOMMENDATIONS 1-2
FUEL TANK CAPACITY 9-2
FUSE PANEL DESCRIPTION 4-40

G
GENERAL CHECKS 8-6
GOOD BRAKING PRACTICE 3-23

H
HAZARD WARNING SYSTEM 2-26
HEADLIGHT AIMING ADJUSTMENT 4-29
HEADLIGHT LEVELING DEVICE SYSTEM 2-23
HEADREST 1-39
HEATING AND COOLING CONTROL 2-38
HEATING CONTROLS 2-42
HEIGHT ADJUSTABLE FRONT SEAT SHOULDER
BELT 1-43
HIGH-MOUNTED REAR STOP LIGHT 2-25
HOLD OPEN LOCK SYSTEM 1-14
HOOD RELEASE 1-25
HORN 2-37

I
IF THE ENGINE OVERHEATS 4-25
IF THE ENGINE WILL NOT START 4-23
IF YOU HAVE A FLAT TIRE 4-6
IGNITION SWITCH 3-4
ILLUMINATED IGNITION SWITCH 1-12
IMMOBILIZER SYSTEM 1-7
INCLINOMETER 2-17
INSTALLATION OF ACCESSORIES 1-5
INSTRUMENT CLUSTER AND
INDICATOR LIGHTS 2-2
INSTRUMENTS PANEL LIGHT CONTROL
(RHEOSTAT) 2-24
INTERIOR LIGHT 2-28

J
JACK 4-2
JUMP STARTING 4-24

K
KEYS 1-7
KEY POSITIONS 3-4

L
LOADING 3-23
LOCKING DIFFERENTIAL 3-32
LUBRICATION CHART 9-4

M
MAINTENANCE INTERVALS 6-2
MAKING A FLAT SEAT 1-38
MANUAL TRANSMISSION 3-8
MEASUREMENT 9-2
MULTI-FUNCTION LIGHT SWITCH
Daytime Running Lights 2-20
Headlight Flasher 2-20
Headlight Switch 2-19
High-beam Switch 2-20
Lane Change Signal 2-19
Parking Light Auto Cut 2-20
Turn Signal Switch 2-19
MULTIMETER
Altimeter 2-18
Inclinometer 2-17
Thermometer 2-17

O
ODOMETER/TRIP ODOMETER 2-14
OPERATING THE SUNROOF SYSTEM 2-31
OUTSIDE REARVIEW MIRROR 2-34
OUTSIDE REARVIEW MIRROR HEATER 2-35
OVERDRIVE SWITCH 3-13
OVERHEAD AIR CONDITIONING 2-47

P
PARKING 3-22
PARKING BRAKE 3-21
PARKING BRAKE LEVEL STROKE 8-25
POWER OUTLET 2-27
POWER WINDOW 1-28

R
REAR GATE 1-23
REAR HEATER AND AIR CONDITIONER 2-45
REAR ROOM LIGHT 2-29
REAR SIDE, QUARTER WINDOW 1-29
REAR SUNROOF 2-32
REMOTE FUEL-FILLER LID RELEASE 1-26
REMOVAL OF WATER FROM THE FUEL FILTER 4-22
REPLACEMENT OF LIGHT BULBS 4-30
ROOF RACK 2-33
RUNNING-IN RECOMMENDATIONS 1-3

S
SCHEDULED MAINTENANCE 6-4
SEAT BELTS 1-42
Pre-tensioner seat belt 1-46
SEAT WARMER 1-41
SEATBACK HOLDER 1-41
SEATS
Auxiliary Seat 1-38
Fourth Seat 1-37
Front Seat 1-32
Making a flat Seat 1-38
Second Seat 1-34
Third Seat 1-35
SIDE GATE 1-24
SLIDING WINDOW GLASS 1-29
SMOOTH CORNERING 3-29
SPARE TIRE 4-3
SPARE TIRE ANTI-THEFT DEVICE 4-6
SPEEDOMETER 2-13
STARTING 3-5
STARTING AND STOPPING THE ENGINE FOR TURBO CHARGER OR TURBO CHARGER INTERCOOLER 3-8
STEERING WHEEL TILT LEVER 1-50
STEREO SOUND SYSTEM 2-49
SUNROOF 2-30
SUNSHADE 2-30
SUNVISOR 2-33
SUPPLEMENTAL RESTRAINT(AIRBAG) SYSTEM .. 1-51

T
TACHOMETER 2-14
TAIL GATE 1-21
TAIL GATE WINDOW WASHER FLUID 8-23
TAIL GATE WINDOW WIPER AND WASHER
SWITCH 2-22
THEFT-ALARM SYSTEM 1-16
THERMOMETER 2-17
TIRE
Condition 8-25
Inflation Pressure 8-26
Rotation 8-27
TOOLS AND JACK 4-2
TOWING 4-15
If your vehicle must be towed 4-13
TRAILER OR VEHICLE TOWING 4-17
TRANSAXLE FLUID 9-4
TWIN SWING DOOR 1-23

V
VENTILATION 2-42
VEHICLE IDENTIFICATION NUMBER (VIN) 1-5

W
WARNING AND INDICATOR LIGHTS 2-8
WINDSHIELD WASHER FLUID 8-20
WINDSHIELD WIPER AND WASHER SWITCH 2-21
WINDSHIELD WIPER BLADES 8-21
WINTER DRIVING 3-29