CLUTCH SYSTEM

PROBLEM SYMPTOMS TABLE

Use the table below to help find the cause of the problem. The numbers indicate the likelihood of the possible causes of the problem in descending order. Check each part in order. Replace parts as necessary.

Symptom	Suspected area	See page
Clutch grabs/chatters	1. Engine mounting (Loose)	-
	2. Clutch disc assembly (Excessive runout)	CL-15
	3. Clutch disc assembly (Oily)	CL-15
	4. Clutch disc assembly (Worn out)	CL-15
	5. Clutch disc torsion spring (Damaged)	CL-15
	6. Clutch disc assembly (Glazed)	CL-15
	7. Diaphragm spring (Tip out of alignment)	CL-15
Clutch pedal spongy	1. Clutch line (Air in line)	-
	2. Master cylinder cup (Damaged)	CL-9
	3. Release cylinder rubber (Damaged)	CL-12
Clutch noisy	1. Clutch release bearing assembly (Worn, dirty or damaged)	CL-15
	2. Clutch disc torsion spring (Damaged)	CL-15
Clutch slips	1. Clutch pedal (Free play out of adjustment)	CL-3
	2. Clutch disc assembly (Oily)	CL-15
	3. Clutch disc assembly (Worn out)	CL-15
	4. Diaphragm spring (Damaged)	CL-15
	5. Pressure plate (Distorted)	CL-15
	6. Flywheel sub-assembly (Distorted)	CL-15
Clutch does not disengage	1. Clutch pedal (Free play out of adjustment)	CL-3
	2. Clutch line (Air in line)	-
	3. Master cylinder cup (Damaged)	CL-9
	4. Release cylinder cup (Damaged)	CL-12
	5. Clutch disc assembly (Out of line)	CL-15
	6. Clutch disc assembly (Excessive runout)	CL-15
	7. Clutch disc assembly (Lining broken)	CL-15
	8. Clutch disc assembly (Dirty or burned)	CL-15
	9. Clutch disc assembly (Oily)	CL-15
	10. Clutch disc assembly (Lack of spline grease)	CL-15

CLUTCH PEDAL

COMPONENTS

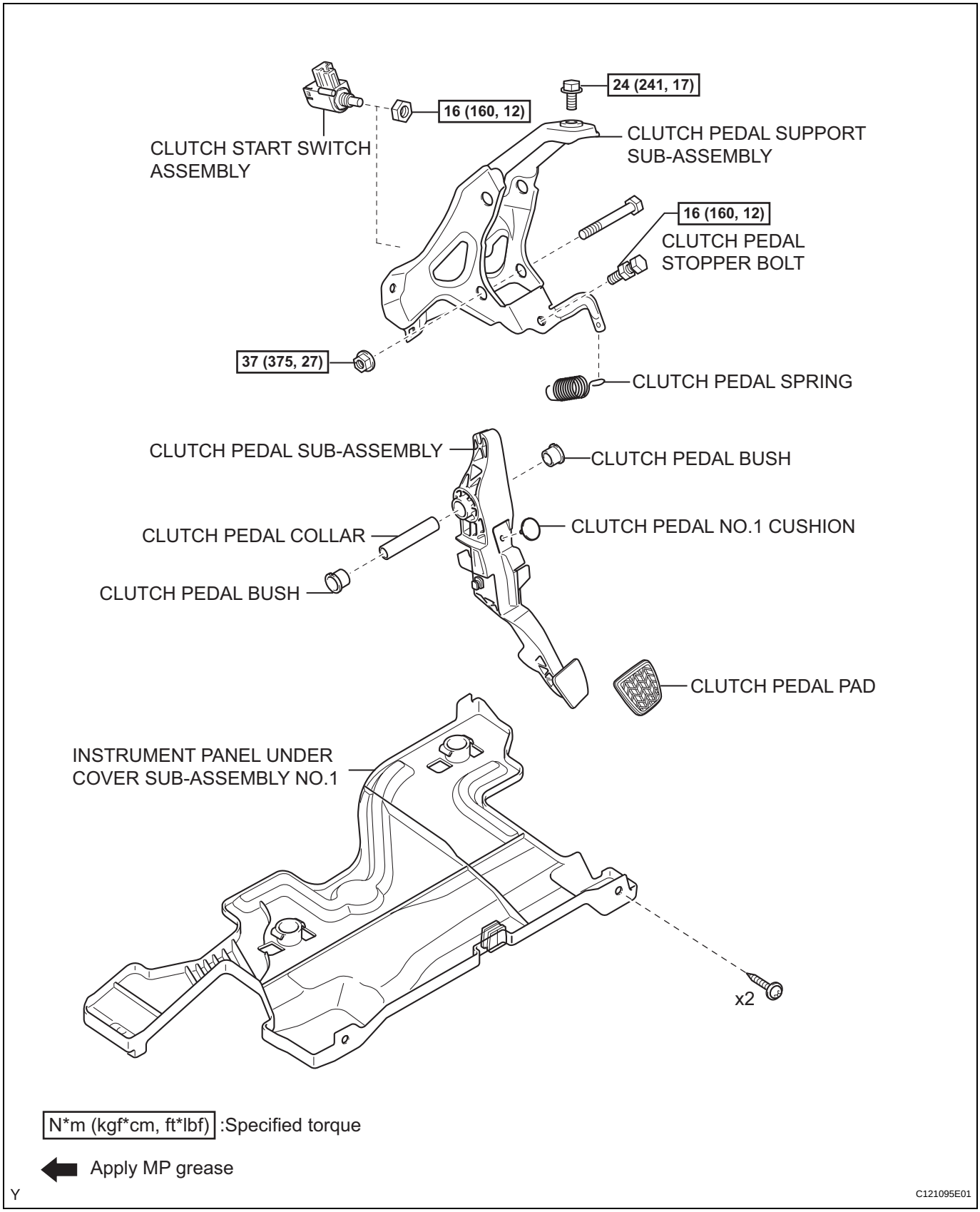

CL

ON-VEHICLE INSPECTION

1. INSPECT AND ADJUST CLUTCH PEDAL SUB-ASSEMBLY

(a) Pull back the floor carpet.

(b) Check that the pedal height is correct.
Pedal height from dash panel:
133.0 to 143.0 mm (5.236 to 5.630 in.)

(c) If the pedal height is not as specified, adjust it as follows.
(1) Loosen the lock nut and turn the stopper bolt until the correct height is obtained.
(2) Tighten the lock nut.
Torque: 16 N*m (160 kgf*cm, 12 ft.*lbf)

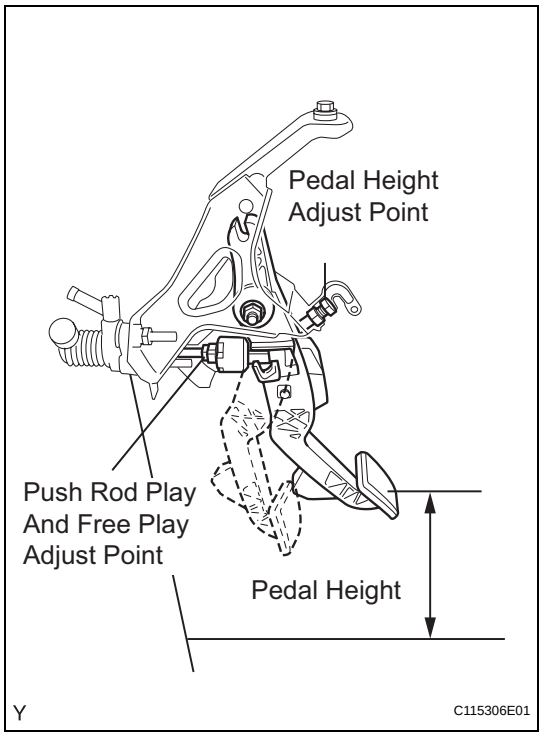

2. INSPECT AND ADJUST PEDAL FREE PLAY AND PUSH ROD PLAY

(a) Check that the pedal free play and push rod play are correct.
(1) Depress the pedal until clutch resistance begins to be felt.
Pedal free play:
5.0 to 15.0 mm (0.197 to 0.591 in.)
(2) Gently depress the pedal until the resistance begins to increase a little.
Push rod play at pedal top:
1.0 to 5.0 mm (0.039 to 0.197 in.)

(b) Adjust the pedal free play and push rod play.
(1) Loosen the lock nut and turn the push rod until the correct free play and push rod play are obtained.
(2) Tighten the lock nut.
Torque: 12 N*m (120 kgf*cm, 8.7 ft.*lbf)
(3) After adjusting the pedal free play, check the pedal height.

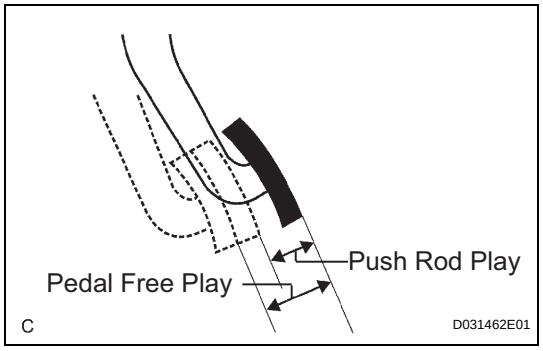

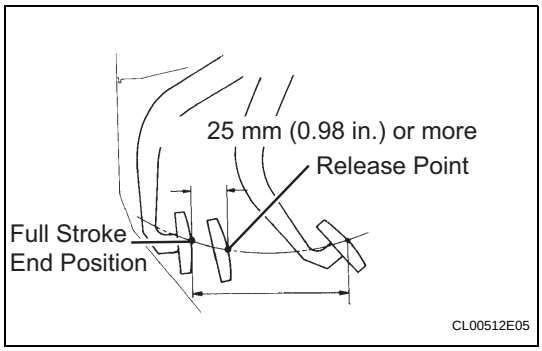

3. INSPECT AND ADJUST CLUTCH RELEASE POINT

(a) Check the clutch release point.

(1) Pull the parking brake lever and install a wheel stoppers.

(2) Start the engine and run it at idle.

(3) Without depressing the clutch pedal, slowly move the shift lever into reverse until the gears come into contact.

(4) Gradually depress the clutch pedal and measure the stroke distance from the point that the gear noise stops (release point) up to the full stroke end position.

Standard distance:

25 mm (0.98 in.) or more (From pedal stroke end position to release point)

If the distance is not as specified, perform the following operations.

- Check pedal height.
- Check push rod play and pedal free play.
- Bleed the clutch line.
- Check the clutch cover assembly and disc assembly.

REMOVAL

1. **REMOVE BRAKE BOOSTER ASSEMBLY**
   (See page BR-41)
2. **REMOVE INSTRUMENT PANEL SUB-ASSEMBLY UPPER (for Hatchback)**
   (See page IP-19)
3. **REMOVE INSTRUMENT PANEL SUB-ASSEMBLY UPPER (for Sedan)**
   (See page IP-5)
4. **REMOVE CLUTCH RESERVOIR TUBE (See page CL-9)**
5. **DISCONNECT CLUTCH MASTER CYLINDER TO FLEXIBLE HOSE TUBE (See page CL-9)**
6. **REMOVE INSTRUMENT PANEL UNDER COVER SUB-ASSEMBLY NO.1 (See page IR-50)**
7. **REMOVE CLUTCH MASTER CYLINDER ASSEMBLY (See page CL-9)**
8. **REMOVE CLUTCH PEDAL SUPPORT SUB-ASSEMBLY**
   (a) Disconnect the wire harness clamp.
   (b) Disconnect the clutch start switch connector.
   (c) Remove the bolt and clutch pedal support.

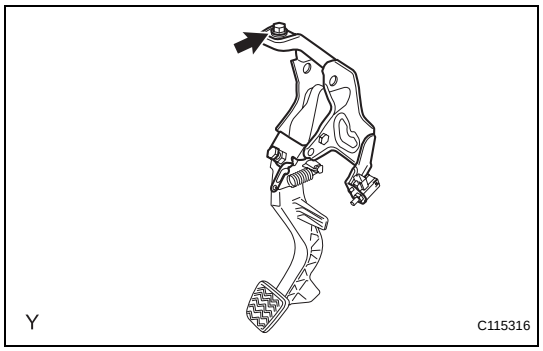

9. **REMOVE CLUTCH START SWITCH ASSEMBLY**
   (a) Remove the nut and clutch start switch.

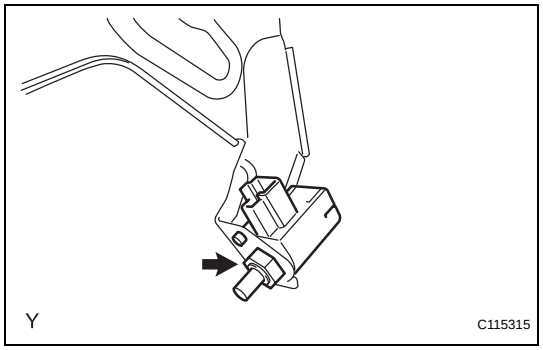

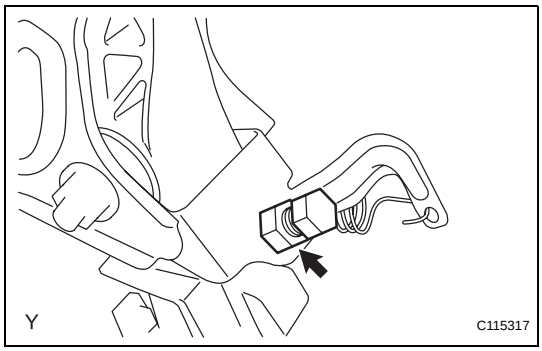

10. REMOVE CLUTCH PEDAL STOPPER BOLT
(a) Loosen the lock nut and remove the clutch pedal stopper bolt.

11. REMOVE CLUTCH PEDAL SPRING

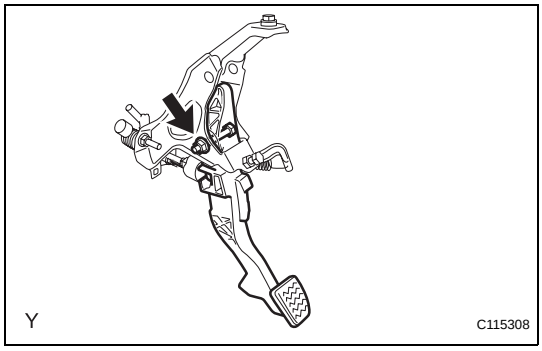

12. REMOVE CLUTCH PEDAL SUB-ASSEMBLY
(a) Remove the bolt and the nut.
(b) Remove the clutch pedal from the clutch pedal support.

13. REMOVE CLUTCH PEDAL PAD

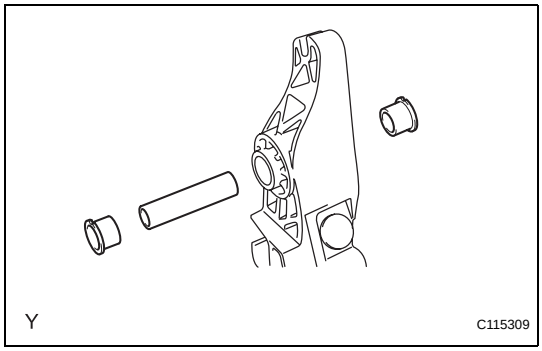

14. REMOVE CLUTCH PEDAL BUSH
(a) Remove the 2 bushes from the clutch pedal.
(b) Remove the collar from the clutch pedal.

CL

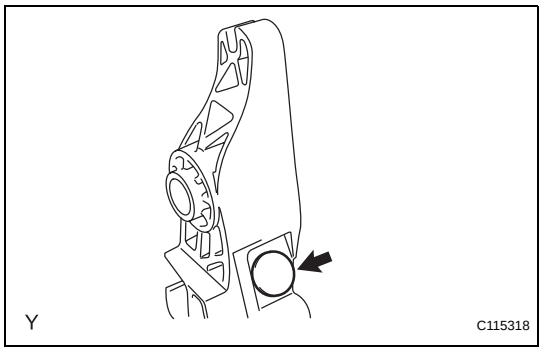

15. REMOVE CLUTCH PEDAL NO.1 CUSHION
(a) Remove the clutch pedal No. 1 cushion from the clutch pedal.

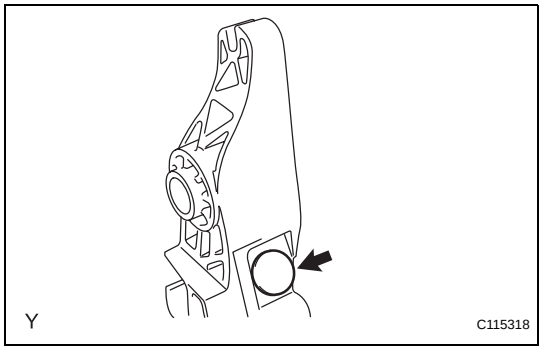

INSTALLATION

1. INSTALL CLUTCH PEDAL NO.1 CUSHION
(a) Install the clutch pedal No. 1 cushion onto the clutch pedal.

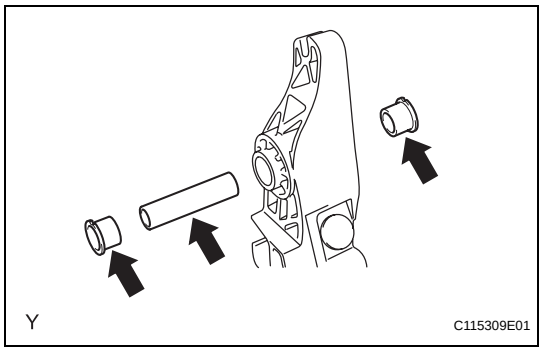

2. INSTALL CLUTCH PEDAL BUSH

(a) Apply MP grease to the 2 bushes and collar.

(b) Install the 2 bushes and collar onto the clutch pedal.

3. INSTALL CLUTCH PEDAL PAD

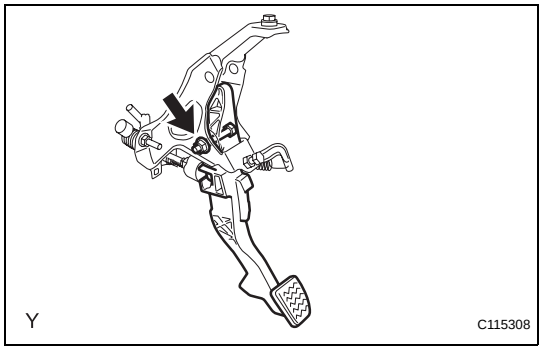

4. INSTALL CLUTCH PEDAL SUB-ASSEMBLY

(a) Install the clutch pedal onto the clutch pedal support with the bolt and the nut.
Torque: 37 N*m (375 kgf*cm, 27 ft.*lbf)
HINT:
Install the bolt from the left side of the vehicle.

5. INSTALL CLUTCH PEDAL SPRING

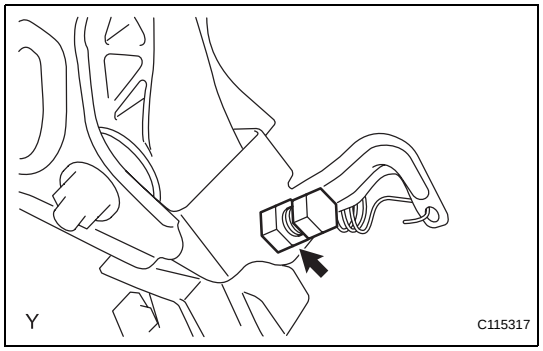

6. INSTALL CLUTCH PEDAL STOPPER BOLT

(a) Install the clutch pedal stopper bolt so that its end touches the clutch pedal cushion.
HINT:
Tighten the lock nut to the specified torque when adjusting the clutch pedal.

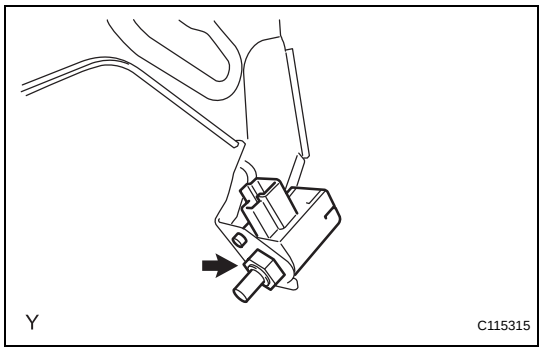

7. INSTALL CLUTCH START SWITCH ASSEMBLY

(a) Install the clutch start switch with the nut.
Torque: 16 N*m (160 kgf*cm, 12 ft.*lbf)

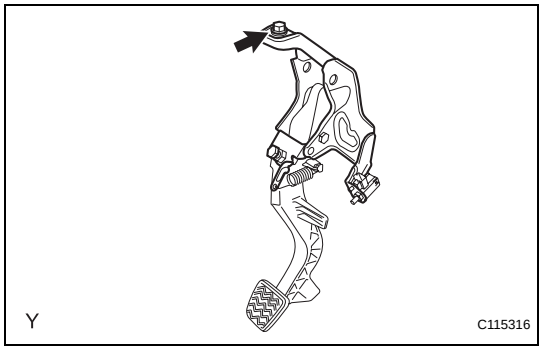

8. INSTALL CLUTCH PEDAL SUPPORT SUB-ASSEMBLY

(a) Install the clutch pedal support onto the vehicle with the bolt.
Torque: 24 N*m (241 kgf*cm, 17 ft.*lbf)

(b) Connect the clutch start switch connector.

(c) Connect the wire harness clamp.

9. INSTALL CLUTCH MASTER CYLINDER ASSEMBLY
(See page CL-10)

10. **CONNECT CLUTCH MASTER CYLINDER TO FLEXIBLE HOSE TUBE (See page CL-10)**
11. **INSTALL CLUTCH RESERVOIR TUBE (See page CL-10)**
12. **INSTALL INSTRUMENT PANEL SUB-ASSEMBLY UPPER (for Hatchback)**
    (See page IP-26)
13. **INSTALL INSTRUMENT PANEL SUB-ASSEMBLY UPPER (for Sedan)**
    (See page IP-10)
14. **INSTALL BRAKE BOOSTER ASSEMBLY**
    (See page BR-43)
15. **INSPECT AND ADJUST CLUTCH PEDAL SUB-ASSEMBLY (See page CL-3)**
16. **INSTALL INSTRUMENT PANEL UNDER COVER SUB-ASSEMBLY NO.1 (See page IR-82)**

CLUTCH MASTER CYLINDER

COMPONENTS

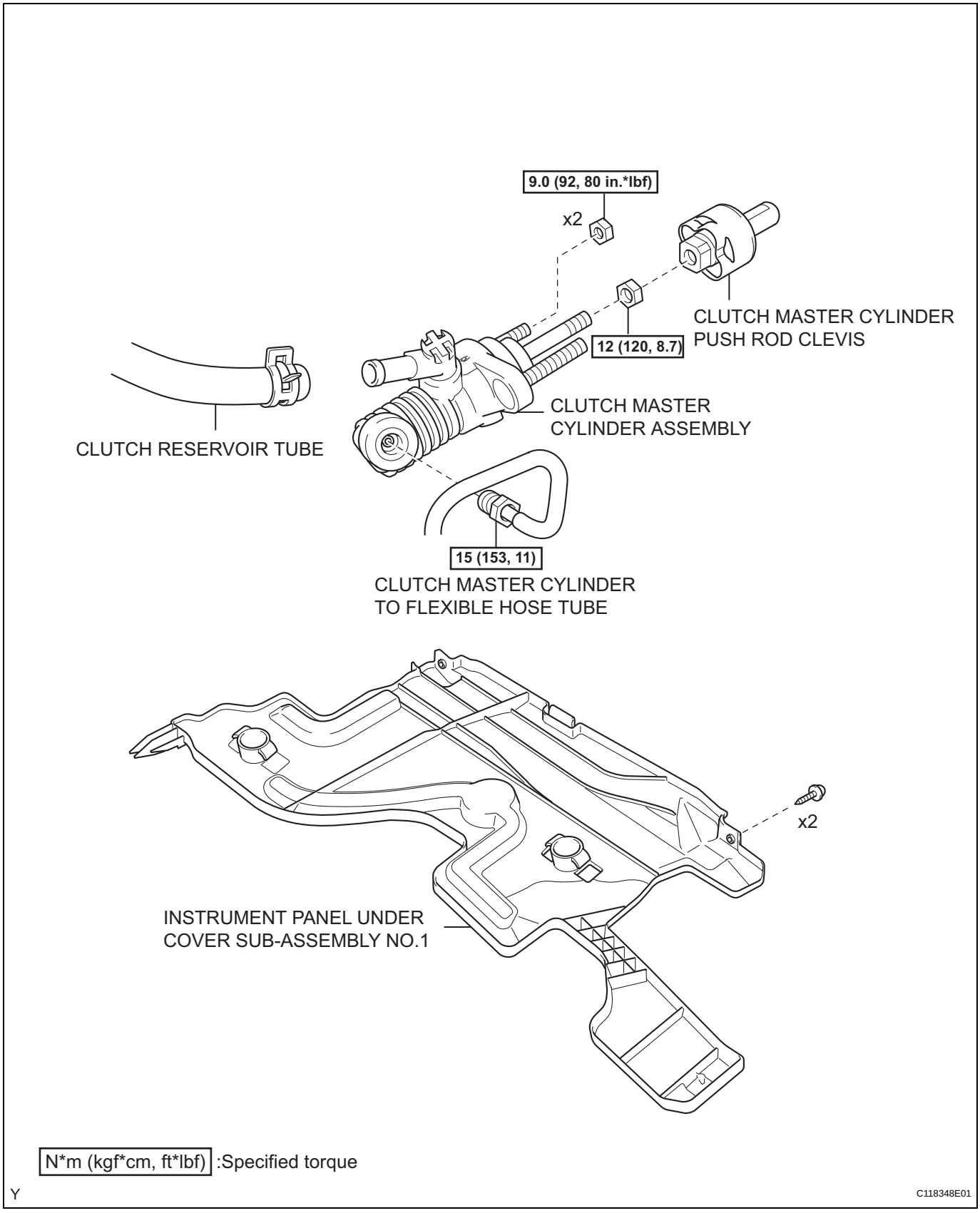

REMOVAL

1. **REMOVE BRAKE BOOSTER ASSEMBLY**
   (See page BR-41)

2. **REMOVE CLUTCH RESERVOIR TUBE**
   (a) Loosen the clip and remove the clutch reservoir tube from the clutch master cylinder assembly.
   HINT:
   Use a container to collect the fluid.

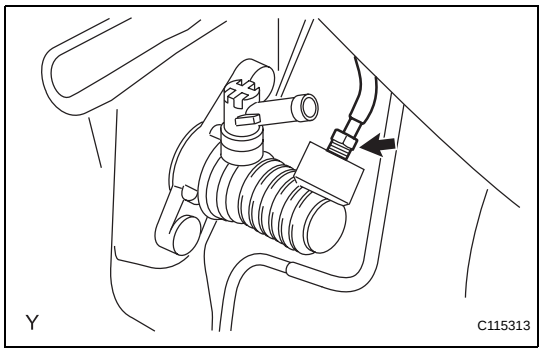

3. **DISCONNECT CLUTCH MASTER CYLINDER TO FLEXIBLE HOSE TUBE**
   (a) Using SST, disconnect the flexible hose tube.
   SST 09023-00101
   HINT:
   Use a container to collect the fluid.

4. **REMOVE INSTRUMENT PANEL UNDER COVER SUB-ASSEMBLY NO.1 (See page IR-50)**

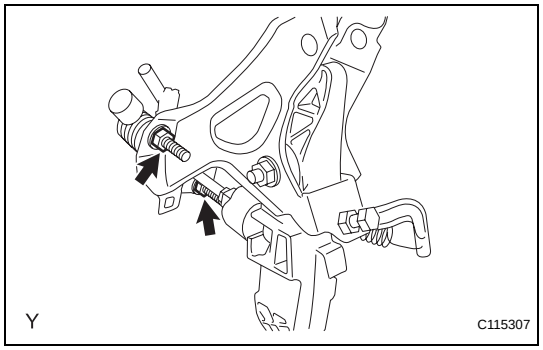

5. **REMOVE CLUTCH MASTER CYLINDER ASSEMBLY**
   (a) Remove the 2 nuts and the clutch master cylinder.

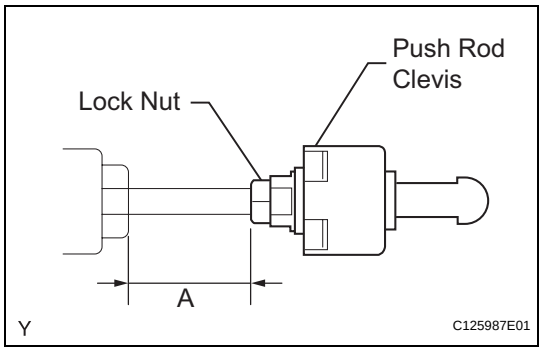

6. **REMOVE CLUTCH MASTER CYLINDER PUSH ROD CLEVIS**
   (a) Measure dimension A as shown in the illustration before loosening the lock nut.
   (b) Loosen the lock nut and remove the push rod clevis.
   (c) Remove the lock nut.

CL

INSTALLATION

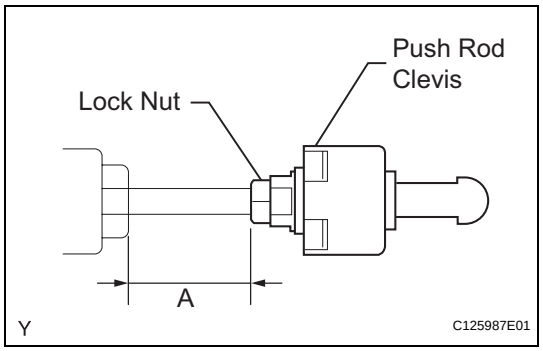

1. **INSTALL CLUTCH MASTER CYLINDER PUSH ROD CLEVIS**
   (a) Install the lock nut onto the push rod.
   (b) Install the push rod clevis.
   (c) Tighten the lock nut and check the dimension A is same as the dimension A that has been measured.

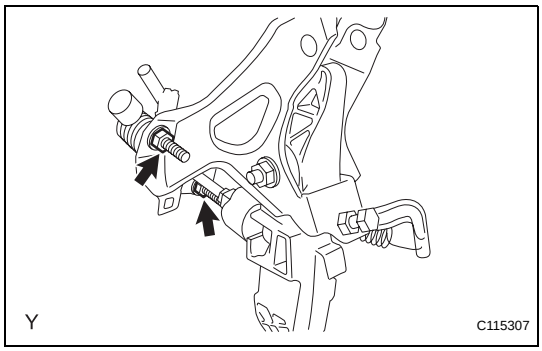

2. INSTALL CLUTCH MASTER CYLINDER ASSEMBLY

(a) Install the clutch master cylinder with the 2 nuts.
Torque: 9.0 N*m (92 kgf*cm, 80 in.*lbf)

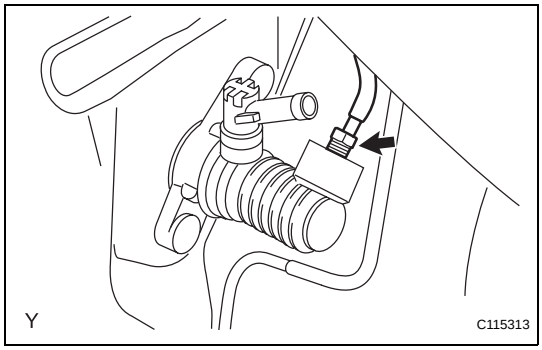

3. CONNECT CLUTCH MASTER CYLINDER TO FLEXIBLE HOSE TUBE

(a) Using SST, connect the flexible hose tube.
SST 09023-00101
Torque: 15 N*m (153 kgf*cm, 11 ft.*lbf)

4. INSTALL CLUTCH RESERVOIR TUBE

(a) Connect the clutch reservoir tube with the clip to the clutch master cylinder assembly.

5. INSTALL BRAKE BOOSTER ASSEMBLY
(See page BR-43)

6. INSPECT AND ADJUST CLUTCH PEDAL SUB-ASSEMBLY (See page CL-3)

7. INSTALL INSTRUMENT PANEL UNDER COVER SUB-ASSEMBLY NO.1 (See page IR-82)

CLUTCH RELEASE CYLINDER

COMPONENTS

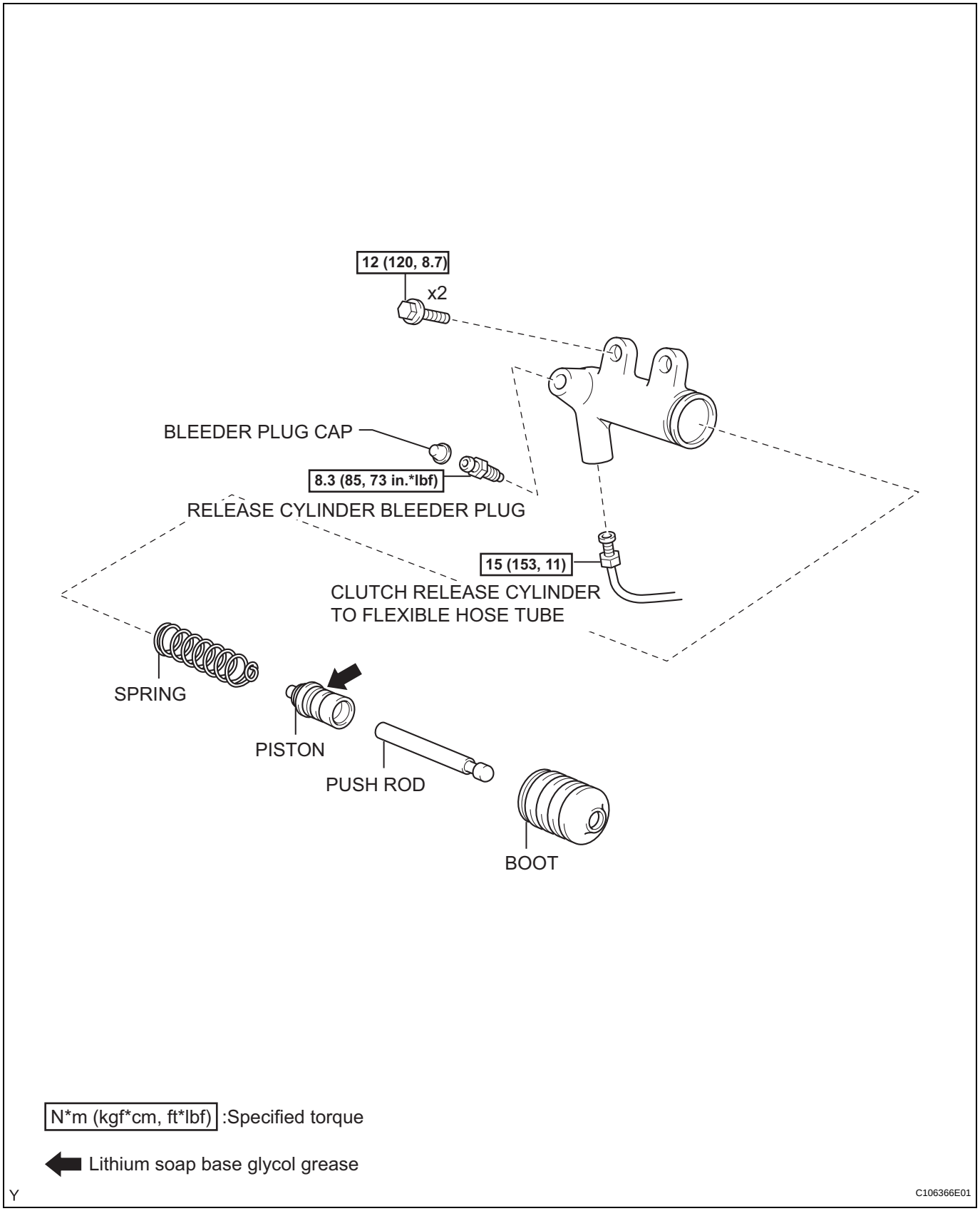

CL

REMOVAL

1. DRAIN BRAKE FLUID

2. DISCONNECT CLUTCH RELEASE CYLINDER TO FLEXIBLE HOSE TUBE

(a) Using SST, disconnect the flexible hose tube.
SST 09023-00101
HINT:
Use a container to collect the fluid.

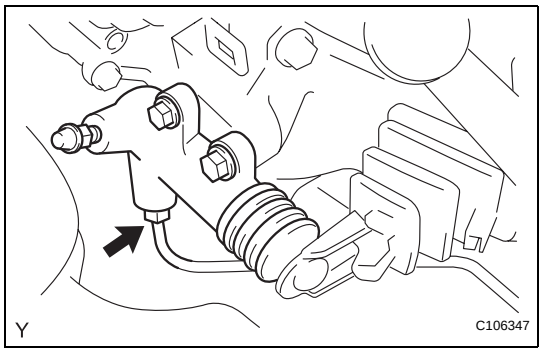

3. REMOVE CLUTCH RELEASE CYLINDER ASSEMBLY

(a) Remove the 2 bolts and the clutch release cylinder.

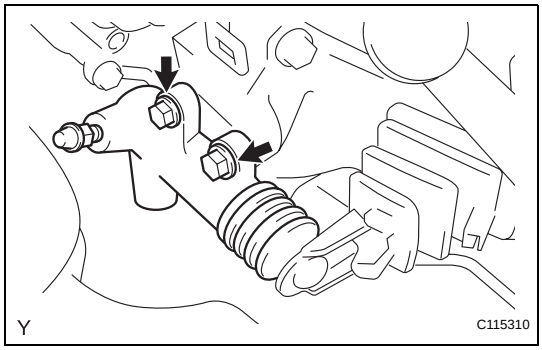

DISASSEMBLY

1. REMOVE CLUTCH RELEASE CYLINDER KIT

(a) Remove the boot from the cylinder body.

(b) Remove the push rod from the cylinder body.

(c) Remove the piston from the cylinder body.

NOTICE:

Do not damage the inside of the cylinder body.

(d) Remove the spring from the cylinder body.

(e) Remove the bleeder plug cap from the bleeder plug.

2. REMOVE RELEASE CYLINDER BLEEDER PLUG

REASSEMBLY

1. **INSTALL RELEASE CYLINDER BLEEDER PLUG**
   Torque: 8.3 N*m (85 kgf*cm, 73 in.*lbf)

2. **INSTALL CLUTCH RELEASE CYLINDER KIT**
   (a) Install the bleeder plug cap onto the bleeder plug.
   (b) Install a new spring onto the cylinder body.
   (c) Coat the parts with lithium soap base glycol grease, as shown in the illustration.
   (d) Install the piston onto the cylinder body.
   NOTICE:
   Do not damage the inside of the cylinder body.
   (e) Install the push rod onto the cylinder body.
   (f) Install the boot onto the cylinder body.

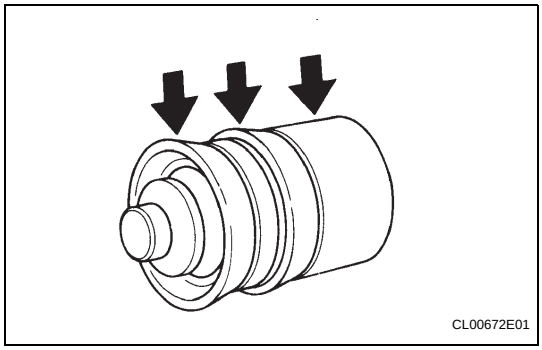

INSTALLATION

1. **INSTALL CLUTCH RELEASE CYLINDER ASSEMBLY**
   (a) Install the clutch release cylinder with the 2 bolts.
   Torque: 12 N*m (120 kgf*cm, 8.7 ft.*lbf)

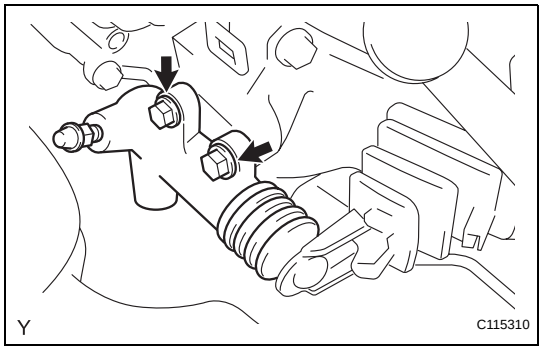

2. **CONNECT CLUTCH RELEASE CYLINDER TO FLEXIBLE HOSE TUBE**
   (a) Using SST, connect the flexible hose tube.
   SST 09023-00101
   Torque: 15 N*m (153 kgf*cm, 11 ft.*lbf)

3. **BLEED CLUTCH PIPE LINE**
   (a) Fill the brake reservoir tank with brake fluid and bleed the clutch system.
   Torque: 8.3 N*m (85 kgf*cm, 73 in.*lbf)

4. **CHECK FOR CLUTCH FLUID LEAKAGE**

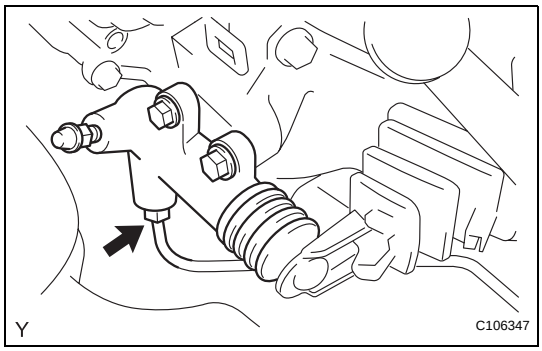

CLUTCH UNIT

COMPONENTS

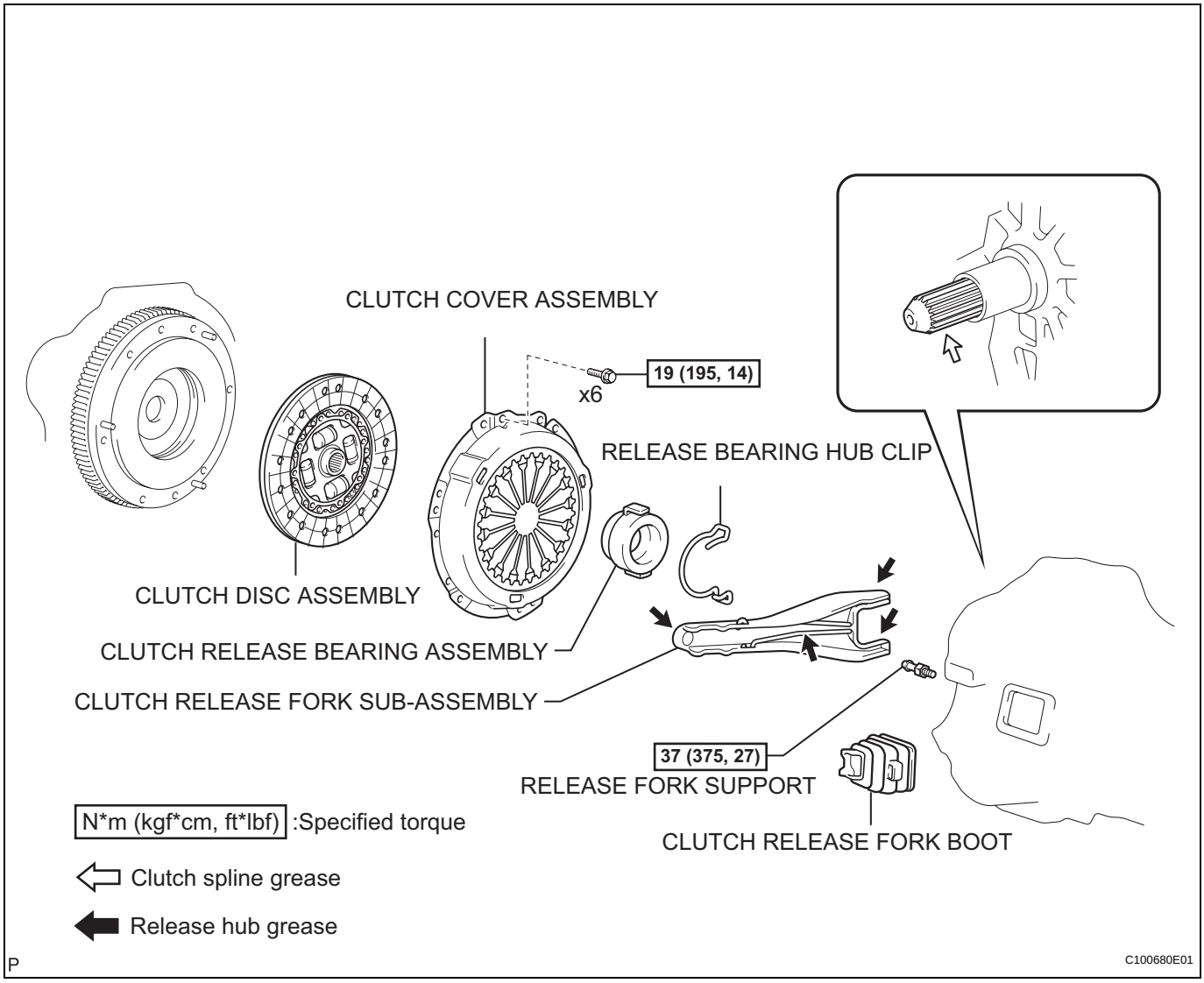

REMOVAL

1. **REMOVE MANUAL TRANSAXLE ASSEMBLY**
   (See page MX-26)
2. **REMOVE CLUTCH RELEASE FORK SUB-ASSEMBLY**
   (a) Remove the clutch release fork with the clutch release bearing from the manual transaxle.
3. **REMOVE CLUTCH RELEASE FORK BOOT**
4. **REMOVE CLUTCH RELEASE BEARING ASSEMBLY**
   (a) Remove the clutch release bearing from the clutch release fork.
5. **REMOVE RELEASE BEARING HUB CLIP**
6. **REMOVE RELEASE FORK SUPPORT**
   (a) Remove the release fork support from the manual transaxle.
7. **REMOVE CLUTCH COVER ASSEMBLY**
   (a) Align the matchmark on the clutch cover assembly with the one on the flywheel.
   (b) Loosen each set bolt one turn at a time until the spring tension is released.
   (c) Remove the set bolts and pull off the clutch cover.
   NOTICE:
   Do not drop the clutch disc.
8. **REMOVE CLUTCH DISC ASSEMBLY**

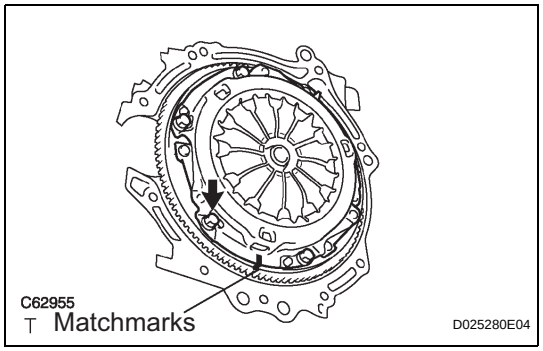

INSPECTION

1. **INSPECT CLUTCH DISC ASSEMBLY**
   (a) Using vernier calipers, measure the rivet head depth.
   Minimum rivet depth:
   0.3 mm (0.012 in.)
   If necessary, replace the clutch disc assembly.
   (b) Install the clutch disc assembly onto the transaxle assembly.
   NOTICE:
   Insert the clutch disc assembly in the correct direction.

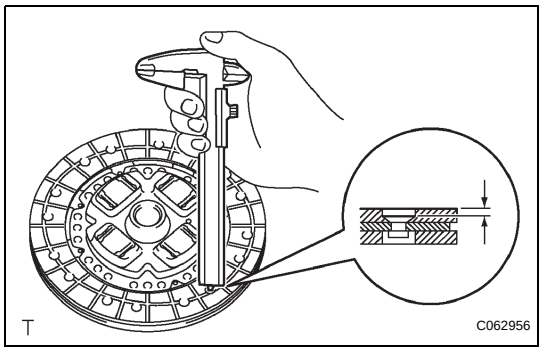

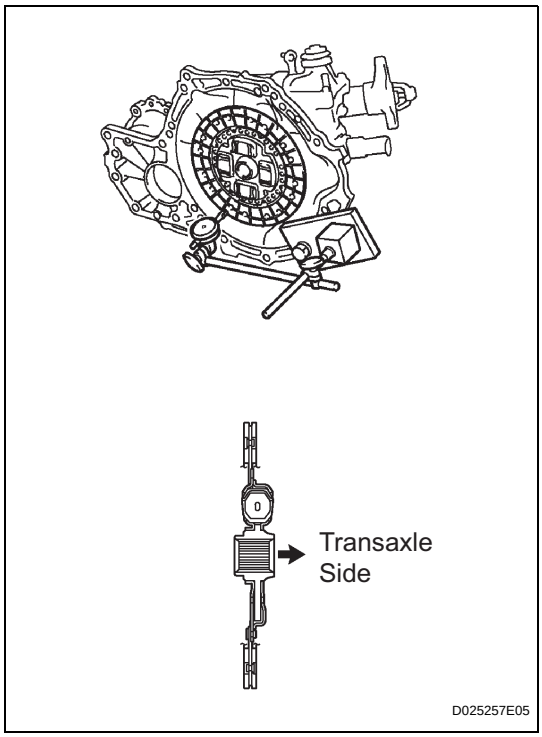

(c) Using a dial gauge, measure the clutch disc assembly runout.
Maximum runout:
0.8 mm (0.031 in.)
If necessary, replace the clutch disc assembly.

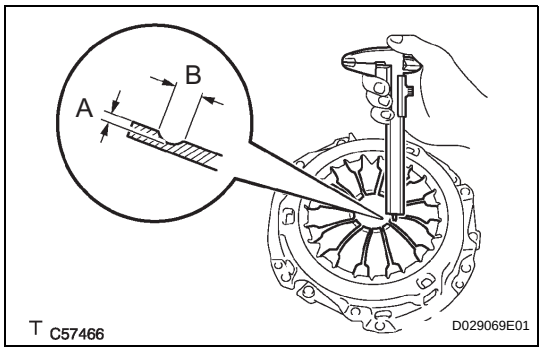

2. INSPECT CLUTCH COVER ASSEMBLY

(a) Using vernier calipers, measure the depth and width of the diaphragm spring wear.
Maximum:
A (Depth): 0.5 mm (0.020 in.)
B (Width): 6.0 mm (0.236 in.)
If necessary, replace the clutch cover assembly.

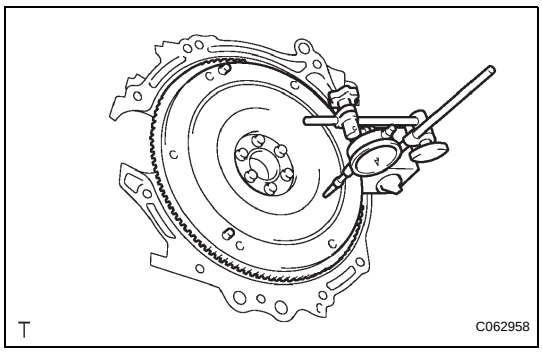

3. INSPECT FLYWHEEL SUB-ASSEMBLY

(a) Using a dial gauge, check the flywheel sub-assembly runout.
Maximum runout:
0.1 mm (0.004 in.)
If necessary, replace the flywheel sub-assembly.

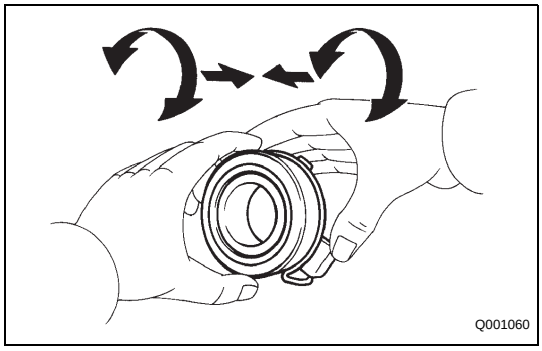

4. INSPECT CLUTCH RELEASE BEARING ASSEMBLY

(a) Check that the clutch release bearing assembly moves smoothly without abnormal resistance by turning the sliding parts of the clutch release bearing assembly (contact surfaces with the clutch cover) while applying force in the axial direction.

(b) Inspect the clutch release bearing assembly for damage and wear.
HINT:
If necessary, replace the release bearing assembly.

INSTALLATION

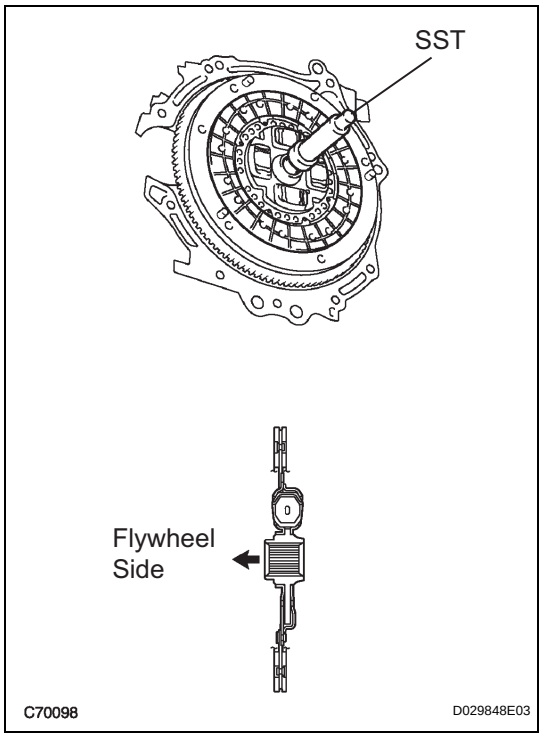

1. INSTALL CLUTCH DISC ASSEMBLY

(a) Insert SST into the clutch disc assembly, then insert them both into the flywheel sub-assembly.
SST 09301-00110
NOTICE:
Insert the clutch disc assembly in the correct direction.

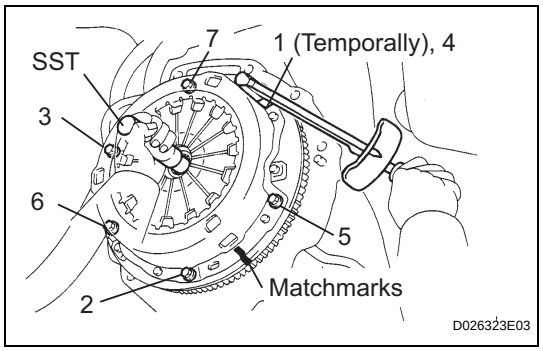

2. INSTALL CLUTCH COVER ASSEMBLY

(a) Align the matchmark on the clutch cover assembly with that on the flywheel sub-assembly.

(b) Following the procedures shown in the illustration, tighten the 6 bolts in order, starting with the bolt located near the knock pin at the top.
Torque: 19 N*m (195 kgf*cm, 14 ft.*lbf)
HINT:
- Following the order in the illustration, tighten the blots evenly one at a time.
- Move SST up and down, right and left lightly after checking that the disc is in the center, and tighten the bolts.

SST 09301-00110

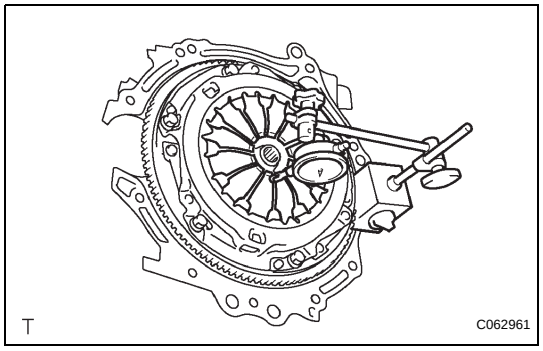

3. INSPECT AND ADJUST CLUTCH COVER ASSEMBLY

(a) Using a dial indicator with a roller instrument, check the diaphragm spring tip alignment.
Maximum non-alignment:
0.5 mm (0.020 in.)

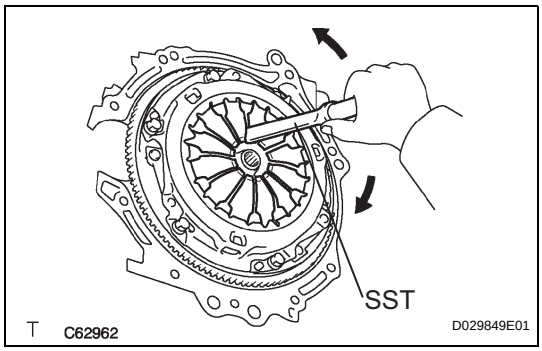

(b) If the alignment is not as specified, using SST, adjust the diaphragm spring tip alignment.
SST 09333-00013

4. INSTALL RELEASE FORK SUPPORT

(a) Install the release fork support onto the transaxle assembly.
Torque: 37 N*m (375 kgf*cm, 27 ft.*lbf)

5. INSTALL CLUTCH RELEASE FORK BOOT

6. INSTALL RELEASE BEARING HUB CLIP

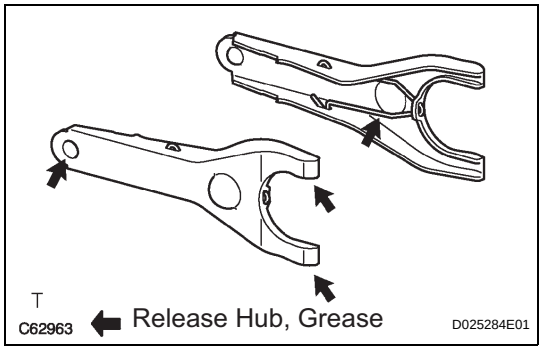

7. INSTALL CLUTCH RELEASE FORK SUB-ASSEMBLY

(a) Apply release hub grease to the contact surfaces of the release fork and release bearing assembly, release fork and push rod, and release fork and fork support.
Sealant:
Toyota Genuine Release Hub Grease or Equivalent

(b) Install the release fork onto the release bearing assembly.

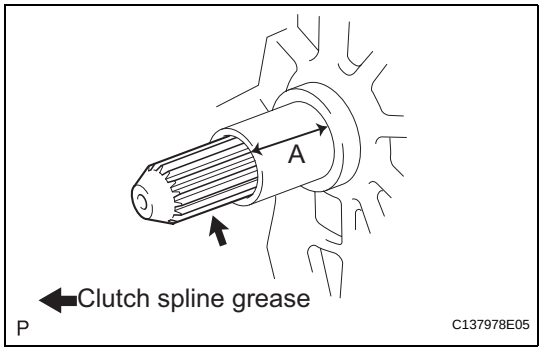

8. INSTALL CLUTCH RELEASE BEARING ASSEMBLY

(a) Apply clutch spline grease to the input shaft spline.
Sealant:
Toyota Genuine Clutch Spline Grease or Equivalent
NOTICE:
Do not apply grease to portion A shown in the illustration.

(b) Install the clutch release bearing with release fork onto the transaxle assembly.
NOTICE:
After the installation, move the fork forward and backward to check that the release bearing slides smoothly.

9. INSTALL MANUAL TRANSAXLE ASSEMBLY
(See page MX-30)

CLUTCH START SWITCH

COMPONENTS

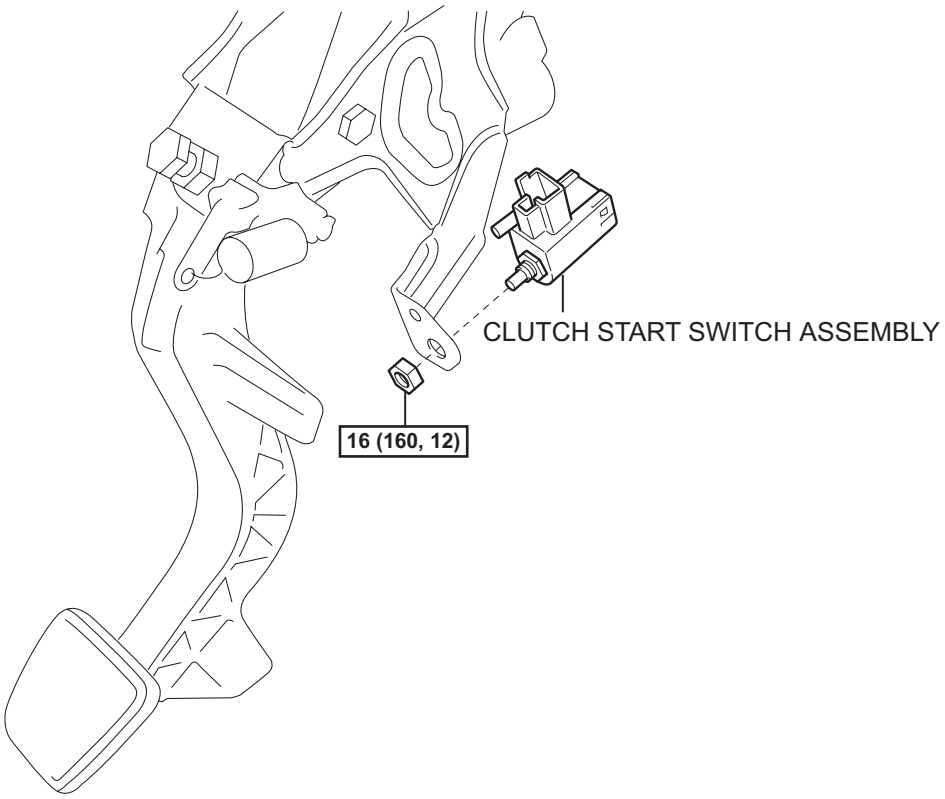

N*m (kgf*cm, ft*lbf) :Specified torque

Y

C116833E01

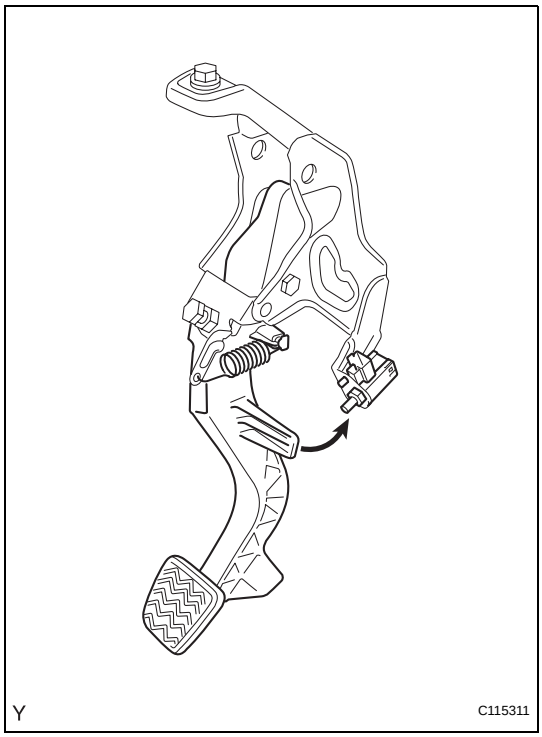

ON-VEHICLE INSPECTION

1. CHECK CLUTCH START SYSTEM

(a) Check that the engine does not start when the clutch pedal is released.

(b) Check that the engine starts when the clutch pedal is fully depressed.
If necessary, replace the clutch start switch assembly.

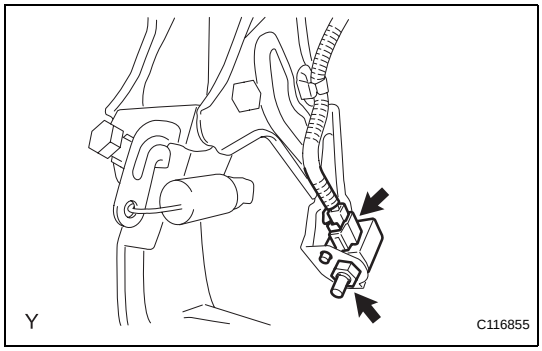

REMOVAL

1. REMOVE CLUTCH START SWITCH ASSEMBLY

(a) Disconnect the clutch start switch connector.

(b) Remove the nut and clutch start switch from the bracket.

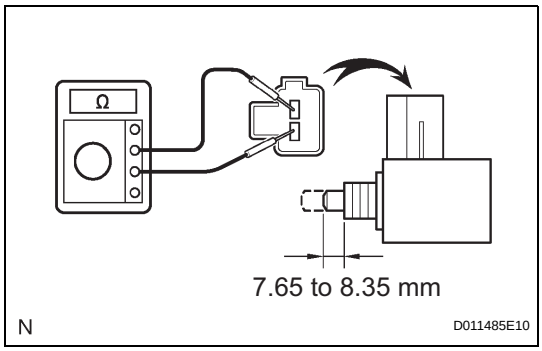

INSPECTION

1. INSPECT CLUTCH START SWITCH ASSEMBLY

(a) Check the resistance between the terminals when the switch is ON and OFF.
Standard resistance

Switch position	Condition
ON (pushed in)	Below 1Ω
OFF (released)	10 kΩ or higher

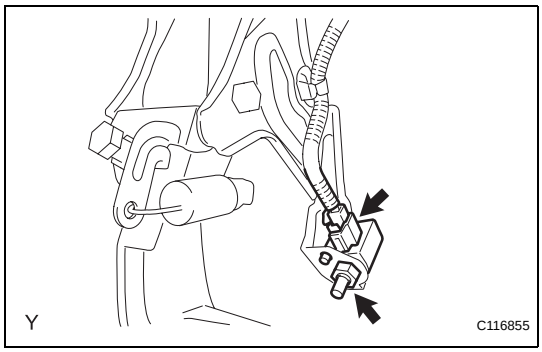

INSTALLATION

1. INSTALL CLUTCH START SWITCH ASSEMBLY

(a) Install the clutch start switch with the nut.
Torque: 16 N*m (160 kgf*cm, 12 ft.*lbf)
NOTICE:
Insert the protrusion of the clutch start switch into the hole in the clutch pedal support.

(b) Connect the clutch start switch connector.

2. INSPECT CLUTCH START SWITCH ASSEMBLY (See page CL-20)